APPENDIX A

AIR QUALITY

APPENDIX A-1

GAS SUPPLY INFORMATION

(Continued)

I. Gas Delivery Specifications (Continued) T

2. Gas delivered into the Utility's system for the account of a customer for which there is no existing contract between the delivering pipeline and the Utility shall be at a pressure such that the gas can be integrated into the Utility's system at the point(s) of receipt. T D

3. Gas delivered, except as defined in I.1 above, shall conform to the following quality specifications at the time of delivery: T T

   a. Heating Value: The minimum heating value is nine hundred and ninety (990) Btu (gross) per standard cubic foot on a dry basis. The maximum heating value is one thousand one hundred fifty (1150) Btu (gross) per standard cubic foot on a dry basis. T

   b. Moisture Content or Water Content: For gas delivered at or below a pressure of eight hundred (800) psig, the gas shall have a water content not in excess of seven (7) pounds per million standard cubic feet. For gas delivered at a pressure exceeding of eight hundred (800) psig, the gas shall have a water dew point not exceeding 20 degrees F at delivery pressure. T

   c. Hydrogen Sulfide: The gas shall not contain more than twenty-five hundredths (0.25) of one (1) grain of hydrogen sulfide, measured as hydrogen sulfide, per one hundred (100) standard cubic feet (4 ppm). The gas shall not contain any entrained hydrogen sulfide treatment chemical (solvent) or its by-products in the gas stream. T

   d. Mercaptan Sulfur: The gas shall not contain more than three tenths (0.3) grains of mercaptan sulfur, measured as sulfur, per hundred standard cubic feet (5 ppm). T T

   e. Total Sulfur: The gas shall not contain more than seventy-five hundredths (0.75) of a grain of total sulfur compounds, measured as sulfur, per one hundred (100) standard cubic feet (12.6 ppm). This includes COS and CS2, hydrogen sulfide, mercaptans and mono, di and poly sulfides. T

   f. Carbon Dioxide: The gas shall not have a total carbon dioxide content in excess of three percent (3%) by volume.

   g. Oxygen: The gas shall not have an oxygen content in excess of two-tenths of one percent (0.2%) by volume, and customer will make every reasonable effort to keep the gas free of oxygen. T

   h. Inerts: The gas shall not contain in excess of four percent (4%) total inerts (the total combined carbon dioxide, nitrogen, oxygen and any other inert compound) by volume. T

   i. Hydrocarbons: For gas delivered at a pressure of 800 psig or less, the gas hydrocarbon dew point is not to exceed 45 degrees F at 400 psig or at the delivery pressure if the delivery pressure is below 400 psig. For gas delivered at a pressure higher than 800 psig, the gas hydrocarbon dew point is not to exceed 20 degrees F measured at a pressure of 400 psig. T T

(Continued)

From: Spahr, Doug [mailto:DSpahr@semprautilities.com]
Sent: Tuesday, April 17, 2007 9:30 AM
To: Mark Turner
Subject: SoCalGas, Revised Exhibit A, Gas Chemistry Data, Sulfur Data

Hello Mark,

We received your voicemail about the change in hourly flow rate for the Ocotillo capacity study. Attached is a revised Exhibit A to reflect your request. I am also attaching gas chemistry and sulfur data. The gas chemistry data is from our Blythe receipt point, which is reflective of what you would receive from our southern transmission system supply. The sulfur data is from all of our receipt points. Likewise, you should focus on the Blythe receipt point, or "B1 and B2", as the most representative sample for your location.

Let me know if you need any other data.

Regards,

Doug Spahr
Sr. Account Manager
Southern California Gas Company
555 W. Fifth Street, M/L GT 22A1
Los Angeles, CA 90013-1040
office: 213 244-3791
fax: 213 226-4129
mobile: 310 869-7115
email: dspahr@semprautilities.com

<<Sulf2006BordData.xls>> <<Blythe Gas Chemistry-010107-041307.xls>> <<Ocotillo Exh A-041907-revA.pdf>> Sulf2006BordData.xls Blythe Gas Chemistry-010107-041307.xls

From 01/06 to 12/06 (grains S/100 cf)

Out of State Suppliers	H_2S			RSH			Total Sulfur*		
Location	Min	Max	Avg	Min	Max	Avg	Min	Max	Avg
NN	0.001	0.065	0.011	0.001	0.055	0.004	0.070	0.167	0.110
B1	0.007	0.028	0.013	0.028	0.088	0.058	0.051	0.114	0.071
B2	0.005	0.019	0.012	0.024	0.107	0.065	0.059	0.119	0.078
SN	0.003	0.039	0.010	0.025	0.133	0.071	0.030	0.152	0.081
WR/KM	0.000	0.142	0.052	0.000	0.157	0.038	0.038	0.227	0.103
KJ	0.015	0.159	0.031	0.005	0.057	0.013	0.079	0.222	0.098

From 01/06 to 12/06 (ppmv S)

Out of State Suppliers	H_2S			RSH			Total Sulfur*		
Location	Min	Max	Avg	Min	Max	Avg	Min	Max	Avg
NN	0.02	1.10	0.18	0.02	0.93	0.06	1.18	2.82	1.85
B1	0.13	0.48	0.22	0.47	1.48	0.97	0.86	1.92	1.19
B2	0.08	0.31	0.21	0.41	1.80	1.10	0.99	2.01	1.31
SN	0.04	0.66	0.17	0.42	2.25	1.19	0.51	2.56	1.36
WR/KM	0.00	2.39	0.87	0.01	2.65	0.64	0.64	3.82	1.74
KJ	0.25	2.68	0.52	0.08	0.96	0.21	1.34	3.74	1.65

Assuming 16.9 ppm = 1 grains S/Ccf

* Includes estimated supplemental odorant based on border guidelines of 50/50 t-butyl mercaptan/thiophane

** SoCalGas Specifications allow up to 0.25 gr.H_2S/100scf and 0.75 gr. S/100scf Total Sulfur

The enclosed is provided for information purposes only. The Gas Company has made reasonable efforts to ensure all information is correct and consistent with the applicable Tariffs. To the extent there is any conflict with the Tariffs, the Tariffs shall govern in all cases. In addition, neither The Gas Company's publication nor verbal representations thereof constitutes any statement, recommendation, endorsement, approval or guaranty (either express or implied) of any product or service. Moreover, The Gas Company shall not be responsible for errors or omissions in this publication, for claims or damages relating to the use thereof, even if it has been advised of the possibility of such damages.

Date	HHV (btu/cf)	Specific Gravity	carbon dioxide	nitrogen	methane	ethane	propane	i-butane	n-butane	i-pentane	n-pentane	C6+
1/1/07	1018	0.58	1.21	0.55	96.21	1.56	0.31	0.05	0.06	0.02	0.01	0.02
1/2/07	1018	0.58	1.19	0.62	96.03	1.66	0.32	0.06	0.06	0.02	0.01	0.03
1/3/07	1018	0.58	1.28	0.53	96.04	1.66	0.32	0.06	0.06	0.02	0.01	0.02
1/4/07	1019	0.58	1.17	0.65	95.95	1.75	0.31	0.05	0.06	0.02	0.01	0.03
1/5/07	1019	0.58	1.04	0.78	95.90	1.82	0.30	0.05	0.06	0.02	0.01	0.03
1/6/07	1020	0.58	1.17	0.61	95.94	1.79	0.32	0.05	0.06	0.02	0.01	0.03
1/7/07	1019	0.58	1.22	0.53	96.04	1.73	0.31	0.05	0.06	0.02	0.01	0.03
1/8/07	1019	0.58	1.09	0.65	96.06	1.72	0.31	0.05	0.06	0.02	0.01	0.03
1/9/07	1019	0.58	1.14	0.59	96.12	1.67	0.31	0.05	0.06	0.02	0.01	0.03
1/10/07	1019	0.58	1.10	0.63	96.11	1.70	0.31	0.05	0.06	0.02	0.01	0.03
1/11/07	1018	0.58	1.28	0.50	96.07	1.67	0.31	0.06	0.06	0.02	0.01	0.02
1/12/07	1019	0.58	1.31	0.48	95.98	1.74	0.32	0.06	0.06	0.02	0.01	0.02
1/13/07	1019	0.58	1.28	0.47	96.07	1.71	0.31	0.06	0.06	0.02	0.01	0.02
1/14/07	1017	0.58	1.44	0.36	96.16	1.57	0.30	0.06	0.06	0.02	0.01	0.02
1/15/07	1018	0.58	1.41	0.39	96.11	1.61	0.31	0.06	0.06	0.02	0.01	0.02
1/16/07	1021	0.58	1.35	0.37	96.02	1.70	0.36	0.07	0.07	0.02	0.01	0.02
1/17/07	1019	0.58	1.24	0.35	96.39	1.51	0.33	0.06	0.06	0.02	0.01	0.02
1/18/07	1020	0.58	1.24	0.36	96.32	1.56	0.34	0.06	0.06	0.02	0.01	0.02
1/19/07	1018	0.58	1.37	0.34	96.30	1.49	0.33	0.06	0.06	0.02	0.01	0.02
1/20/07	1018	0.58	1.30	0.35	96.45	1.44	0.30	0.06	0.05	0.02	0.01	0.02
1/21/07	1017	0.58	1.36	0.35	96.39	1.44	0.30	0.06	0.05	0.02	0.01	0.02
1/22/07	1016	0.58	1.41	0.34	96.34	1.47	0.29	0.05	0.05	0.02	0.01	0.02
1/23/07	1020	0.58	1.38	0.33	96.14	1.60	0.35	0.07	0.07	0.02	0.01	0.02
1/24/07	1018	0.58	1.34	0.33	96.40	1.47	0.31	0.06	0.06	0.02	0.01	0.02
1/25/07	1017	0.58	1.39	0.32	96.35	1.47	0.31	0.06	0.06	0.02	0.01	0.02
1/26/07	1018	0.58	1.39	0.33	96.28	1.50	0.32	0.06	0.06	0.02	0.01	0.02
1/27/07	1018	0.58	1.39	0.33	96.28	1.52	0.32	0.06	0.06	0.02	0.01	0.02
1/28/07	1017	0.58	1.42	0.32	96.32	1.49	0.30	0.06	0.05	0.02	0.01	0.02
1/29/07	1017	0.58	1.42	0.33	96.28	1.49	0.32	0.06	0.06	0.02	0.01	0.02
1/30/07	1018	0.58	1.36	0.33	96.35	1.47	0.32	0.06	0.06	0.02	0.01	0.02
1/31/07	1018	0.58	1.38	0.33	96.33	1.48	0.32	0.06	0.06	0.02	0.01	0.02
2/1/07	1018	0.58	1.32	0.32	96.45	1.44	0.30	0.06	0.06	0.02	0.01	0.02
2/2/07	1017	0.58	1.36	0.33	96.43	1.42	0.30	0.06	0.06	0.02	0.01	0.02
2/3/07	1019	0.58	1.32	0.34	96.33	1.50	0.33	0.06	0.06	0.02	0.01	0.02
2/4/07	1020	0.58	1.25	0.34	96.33	1.55	0.35	0.07	0.06	0.02	0.01	0.02

DISCLAIMER: This information is provided solely for informational purposes. Although SoCalGas has used reasonable efforts to assure its accuracy, no representation is made that the contents are free from error, or suitable for use for any particular purpose. SoCalGas assumes no responsibility for use of, or reliance on, this information by any party, and specifically advises such parties to discuss any decisions or actions related herewith their own advisors and experts.

Date	HHV (btu/cf)	Specific Gravity	carbon dioxide	nitrogen	methane	ethane	propane	i-butane	n-butane	i-pentane	n-pentane	C6+
2/5/07	1022	0.58	1.25	0.34	96.17	1.67	0.37	0.07	0.07	0.02	0.01	0.02
2/6/07	1021	0.58	1.28	0.34	96.24	1.59	0.36	0.07	0.07	0.02	0.01	0.02
2/7/07	1020	0.58	1.15	0.57	96.07	1.69	0.34	0.06	0.06	0.02	0.01	0.03
2/8/07	1020	0.58	1.10	0.63	95.97	1.78	0.33	0.06	0.06	0.02	0.01	0.03
2/9/07	1020	0.58	1.24	0.52	95.96	1.76	0.34	0.06	0.06	0.02	0.01	0.02
2/10/07	1020	0.58	1.28	0.49	95.99	1.72	0.34	0.06	0.06	0.02	0.01	0.02
2/11/07	1020	0.58	1.28	0.47	96.04	1.67	0.34	0.06	0.07	0.02	0.01	0.03
2/12/07	1020	0.58	1.28	0.50	96.00	1.68	0.35	0.06	0.07	0.02	0.01	0.03
2/13/07	1019	0.58	1.27	0.50	96.07	1.64	0.34	0.06	0.07	0.02	0.01	0.03
2/14/07	1019	0.58	1.37	0.38	96.08	1.61	0.35	0.07	0.07	0.02	0.01	0.02
2/15/07	1019	0.58	1.39	0.35	96.14	1.57	0.36	0.07	0.07	0.02	0.01	0.02
2/16/07	1021	0.59	1.43	0.35	95.91	1.72	0.38	0.07	0.07	0.02	0.01	0.02
2/17/07	1020	0.58	1.35	0.36	96.05	1.68	0.36	0.07	0.07	0.02	0.01	0.02
2/18/07	1020	0.58	1.32	0.41	96.11	1.62	0.35	0.06	0.06	0.02	0.01	0.02
2/19/07	1019	0.58	1.33	0.39	96.15	1.60	0.35	0.06	0.06	0.02	0.01	0.02
2/20/07	1020	0.58	1.29	0.46	96.03	1.70	0.34	0.06	0.06	0.02	0.01	0.03
2/21/07	1020	0.58	1.24	0.48	96.08	1.69	0.33	0.06	0.06	0.02	0.01	0.03
2/22/07	1020	0.58	0.94	0.84	95.83	1.93	0.29	0.05	0.06	0.02	0.01	0.03
2/23/07	1021	0.58	0.89	0.81	95.97	1.83	0.31	0.05	0.06	0.02	0.02	0.03
2/24/07	1019	0.58	1.11	0.68	96.03	1.71	0.30	0.05	0.06	0.02	0.01	0.03
2/25/07	1018	0.58	1.26	0.50	96.21	1.57	0.30	0.05	0.06	0.02	0.01	0.02
2/26/07	1020	0.58	1.12	0.63	96.00	1.74	0.33	0.06	0.07	0.02	0.02	0.03
2/27/07	1022	0.58	0.91	0.82	95.84	1.89	0.35	0.06	0.07	0.02	0.02	0.03
2/28/07	1024	0.58	0.90	0.88	95.57	2.05	0.39	0.06	0.08	0.02	0.02	0.03
3/1/07	1023	0.58	0.83	0.86	95.80	1.96	0.35	0.06	0.07	0.02	0.02	0.03
3/2/07	1021	0.58	0.99	0.69	96.02	1.78	0.33	0.06	0.07	0.02	0.02	0.03
3/3/07	1021	0.58	1.11	0.61	95.98	1.76	0.35	0.06	0.07	0.02	0.02	0.03
3/4/07	1021	0.58	1.23	0.49	96.04	1.70	0.35	0.07	0.07	0.02	0.02	0.03
3/5/07	1023	0.58	1.07	0.67	95.78	1.90	0.38	0.07	0.07	0.02	0.02	0.03
3/6/07	1023	0.58	0.85	0.97	95.50	2.09	0.37	0.06	0.07	0.02	0.02	0.04
3/7/07	1022	0.58	0.93	0.88	95.61	2.02	0.36	0.06	0.07	0.02	0.02	0.03
3/8/07	1022	0.58	1.00	0.80	95.69	1.98	0.34	0.06	0.07	0.02	0.02	0.03
3/9/07	1020	0.58	1.04	0.74	95.87	1.85	0.33	0.06	0.06	0.02	0.01	0.03
3/10/07	1023	0.58	0.87	0.97	95.49	2.12	0.36	0.06	0.07	0.02	0.02	0.03
3/11/07	1021	0.58	1.08	0.76	95.69	1.95	0.34	0.06	0.06	0.02	0.01	0.03

DISCLAIMER: This information is provided solely for informational purposes. Although SoCalGas has used reasonable efforts to assure its accuracy, no representation is made that the contents are free from error, or suitable for use for any particular purpose. SoCalGas assumes no responsibility for use of, or reliance on, this information by any party, and specifically advises such parties to discuss any decisions or actions related herewith their own advisors and experts.

Date	HHV (btu/cf)	Specific Gravity	carbon dioxide	nitrogen	methane	ethane	propane	i-butane	n-butane	i-pentane	n-pentane	C6+
3/12/07	1021	0.59	1.17	0.67	95.69	1.93	0.35	0.06	0.07	0.02	0.01	0.03
3/13/07	1021	0.58	1.11	0.72	95.67	1.96	0.35	0.06	0.07	0.02	0.02	0.03
3/14/07	1022	0.58	1.05	0.80	95.60	2.01	0.34	0.06	0.07	0.02	0.02	0.03
3/15/07	1021	0.58	1.05	0.75	95.74	1.93	0.33	0.06	0.06	0.02	0.01	0.03
3/16/07	1021	0.58	1.13	0.68	95.71	1.94	0.35	0.06	0.07	0.02	0.02	0.03
3/17/07	1020	0.58	1.23	0.55	95.89	1.82	0.33	0.06	0.06	0.02	0.01	0.03
3/18/07	1022	0.58	1.01	0.77	95.72	1.98	0.34	0.06	0.07	0.02	0.02	0.03
3/19/07	1022	0.58	1.06	0.74	95.67	1.99	0.35	0.06	0.07	0.02	0.02	0.03
3/20/07	1021	0.59	1.28	0.51	95.80	1.87	0.35	0.07	0.07	0.02	0.01	0.03
3/21/07	1022	0.59	1.12	0.76	95.47	2.09	0.36	0.06	0.07	0.02	0.02	0.03
3/22/07	1023	0.59	1.04	0.83	95.44	2.13	0.36	0.06	0.07	0.02	0.02	0.03
3/23/07	1023	0.59	1.15	0.65	95.59	2.03	0.38	0.07	0.07	0.02	0.02	0.03
3/24/07	1020	0.58	1.03	0.78	95.78	1.92	0.31	0.05	0.06	0.02	0.01	0.03
3/25/07	1018	0.58	1.22	0.60	95.97	1.76	0.30	0.05	0.06	0.02	0.01	0.02
3/26/07	1019	0.58	1.12	0.72	95.86	1.82	0.30	0.05	0.06	0.02	0.01	0.03
3/27/07	1021	0.58	1.12	0.72	95.70	1.94	0.34	0.06	0.06	0.02	0.01	0.03
3/28/07	1021	0.58	1.14	0.71	95.67	1.96	0.34	0.06	0.07	0.02	0.01	0.03
3/29/07	1023	0.58	1.08	0.65	95.75	1.97	0.36	0.06	0.07	0.02	0.02	0.03
3/30/07	1022	0.58	1.12	0.57	95.92	1.86	0.34	0.06	0.07	0.02	0.01	0.02
3/31/07	1022	0.58	1.15	0.47	96.06	1.79	0.34	0.06	0.06	0.02	0.01	0.02

DISCLAIMER: This information is provided solely for informational purposes. Although SoCalGas has used reasonable efforts to assure its accuracy, no representation is made that the contents are free from error, or suitable for use for any particular purpose. SoCalGas assumes no responsibility for use of, or reliance on, this information by any party, and specifically advises such parties to discuss any decisions or actions related herewith their own advisors and experts.

APPENDIX A-2

LIST OF PERMITTED EMISSION SOURCES WITHIN 6 MILES OF THE SENTINEL FACILITY

CPV Sentinel Energy Project

Possible sources to be added to the cumulative analysis

Facility ID	Facility Name	Facility Address	Facility Status	Distance from Site	Reason Eliminated
27145	7-ELEVEN FOOD STORE, THE SOUTHLAND CORP	65971 PIERSON BLVD , DESERT HOT SPRINGS, CA 92240		4.0 miles	gas station
138600	ADELPHIA COMMUNICATIONS	11855 PALM DR , DESERT HOT SPRINGS, CA 92240	ACTIVE	4.4 miles	application cancelled 2/04
125457	ALBERTSON'S INC. #6223	82-266 HWY 111 , INDIO, CA 92240	ACTIVE	16.0 miles	distance
103494	AMERICAN GOLF CORPORATION	19300 PALM DR , DESERT HOT SPRINGS, CA 92240	ACTIVE	4.75 miles	gas tank
115024	AMERICAN TOWER SYSTEMS/EDOM HILL	70223 VARNER RD , DESERT HOT SPRINGS, CA 92240	ACTIVE	10.1 miles	distance
89355	ANNA'S DRYCLEANING, ANNA D'ALESSIO	12531 PALM DR , DESERT HOT SPRINGS, CA 92240	ACTIVE	4.4 miles	VOC source
151081	ARCO #06502, SAINI, INC.	12775 PALM DR , DESERT HOT SPRINGS, CA 92240	ACTIVE	4.3 miles	gas station
60672	ARCO DLR, CHUAN CHUN LU #6502	12775 PALM DR , DESERT HOT SPRINGS, CA 92240		4.3 miles	gas station
52243	ARCO DLR, DESERT ARCO, JOHN YASEMI	12775 PALM DR , DESERT HOT SPRINGS, CA 92240		4.3 miles	gas station
36130	ARCO DLR, JIM MCINERNEY	12775 PALM DR , DESERT HOT SPRINGS, CA 92240		4.3 miles	gas station
131033	ARCO FAC #06502 - LU MINI MART INC	12775 PALM DR , DESERT HOT SPRINGS, CA 92240		4.3 miles	gas station
96411	BILL'S GARAGE	11875 PALM DR , DESERT HOT SPRINGS, CA 92240	ACTIVE	4.5 miles	CFC recycling
64158	CARL'S JR REST #730	13-010 PALM DR , DESERT HOT SPRINGS, CA 92240	ACTIVE	4.3 miles	restaurant
32003	CHEVRON DLR, DON HULL	12150 PALM DR , DESERT HOT SPRINGS, CA 92240		4.5 miles	gas station
57837	CHEVRON DLR, MOHAMMAD H BAGHAI	12-150 PALM DR , DESERT HOT SPRINGS, CA 92240		4.5 miles	gas station
47566	CHEVRON DLR, RALPH REINDL	12150 PALM DR , DESERT HOT SPRINGS, CA 92240		4.5 miles	gas station
34332	CIRCLE K STORES INC #314	12350 PALM DR , DESERT HOT SPRINGS, CA 92240		4.5 miles	gas station
147326	CITY OF DESERT HOT SPRINGS	65950 PIERSON BLVD , DESERT HOT SPRINGS, CA 92240	ACTIVE	4.0 miles	250 Hp emergency generator operates <199 hrs/yr
146902	COACHELLA VALLEY WATER DISTRICT	16755 ATLANTIC AVE , DESERT HOT SPRINGS, CA 92240	ACTIVE	3.2 miles	500 Kw, 764 Hp emergency generator operates <200 hrs/yr
152707	CPV SENTINEL LLC	62575 POWER LINE RD , DESERT HOT SPRINGS, CA 92240	ACTIVE	0 miles	project not built
77933	DESERT HOT SPRINGS	11711 WEST ST , DESERT HOT SPRINGS, CA 92240	ACTIVE	4.0 miles	MD offices
86134	DESERT HOT SPRINGS CENTER	N/E CORNER OF TWO BUNCH PALMS , DESERT HOT SPRINGS, CA 92240		4.3 miles	gas station
129482	DESERT HOT SPRINGS CENTER, INC.	13900 PALM DR , DESERT HOT SPRINGS, CA 92240	ACTIVE	4.3 miles	VOC source, soil vapor extraction
104513	DESERT HOT SPRINGS CITY	GIBSON/HACIENDA , DESERT HOT SPRINGS, CA 92240	ACTIVE	3.6 miles	gas station
134812	DESERT VALLEY COLLISION	65100 SAN JACINTO LN , DESERT HOT SPRINGS, CA 92240	ACTIVE	2.7 miles	VOC source
90438	DIANE LYNN MCINERNEY	13163 PALM DR , DESERT HOT SPRINGS, CA 92240	ACTIVE	4.3 miles	CFC recycling
149476	EDOM HILL/VERIZON WIRELESS	70500 VARNER RD , DESERT HOT SPRINGS, CA 92240	ACTIVE	11.0 miles	distance
133329	EDWARDS ENTERPRISES	12021 INDIAN AVE , PALM SPRINGS, CA 92240	ACTIVE	2.3 miles	gas station

Facility ID	Facility Name	Facility Address	Facility Status	Distance from Site	Reason Eliminated
151324	ENTRAVISION COMMUNICATIONS CORP.	70500 VARNER (EDON HILLS) RD , DESERT HOT SPRINGS, CA 92240	ACTIVE	11.0 miles	distance
145922	EXPRESSWAY MARKET INC	17001 PALM DR , DESERT HOT SPRINGS, CA 92240	ACTIVE	4.6 miles	gas station
34159	EXPRESSWAY MARKET, D POULSEN	17001 PALM DR , DESERT HOT SPRINGS, CA 92240		4.6 miles	gas station
32111	EXXON DLR, BILL'S SIGNAL SERV	11-875 N PALM DR , DESERT HOT SPRINGS, CA 92240		4.4 miles	gas station
144373	FINE GRADE EQUIPMENT	MISSION /INDIAN AVE BLVD , DESERT HOT SPRINGS, CA 92240	ACTIVE	4.3 miles	403 fugitive dust
64745	GEORGES ORNAMENTAL IRON	16721 PALM DR , DESERT HOT SPRINGS, CA 92240	ACTIVE	4.3 miles	metal works
36436	GOLDEN LANTERN MOHAWK - CECIL HARVEY	70041 DILLON RD , DESERT HOT SPRINGS, CA 92240		7.6 miles	distance
39792	GREEN GOLD CORP	96100 20TH AVE , DESERT HOT SPRINGS, CA 92240		3.9 miles	out of business 9/83
36534	HARVEY'S GOLDEN LANTERN COUNTRY STORE	70041 DILLON RD , DESERT HOT SPRINGS, CA 92240		7.6 miles	distance
134187	HARVEY'S GOLDEN LNTRN MRKT, BHATTI ENT.	70041 DILLON RD , DESERT HOT SPRINGS, CA 92240	ACTIVE	7.6 miles	distance
108093	HOLLIS AUTOMOTIVE HEATING & AIR,G.HOLLIS	15-440 AVENIDA DESCANSO , DESERT HOT SPRINGS, CA 92240	ACTIVE	4.3 miles	CFC recycling
139170	JACK IN THE BOX INC	22600 PALM DR , DESERT HOT SPRINGS, CA 92240	ACTIVE	4.7 miles	gas tank
90364	JOE BJORNBERG AUTO DOCTOR	13285 CALIENTE DR , DESERT HOT SPRINGS, CA 92240	ACTIVE	4.1 miles	CFC recycling
95497	K-MART #4857	14011 PALM DR , DESERT HOT SPRINGS, CA 92240	ACTIVE	4.6 miles	no equipment listed
77748	KDES RADIO CORP	70070 VARNER RD , DESERT HOT SPRINGS, CA 92240	ACTIVE	9.5 miles	distance
100405	KEN PETERS AUTOMOTIVE	65118 SAN JACINTO LN , DESERT HOT SPRINGS, CA 92240	ACTIVE	2.8 miles	CFC recycling
82266	KPSI RADIO INC	19000 DILLION RD , DESERT HOT SPRINGS, CA 92240	ACTIVE	14.3 miles	distance
103333	L.A. CELLULAR TELEPHONE COMPANY	70500 VARNER RD , DESERT HOT SPRINGS, CA 92240		11.1 miles	distance
109757	LODESTAR TOWERS CALIFORNIA INC	700090 VARNER RD , DESERT HOT SPRINGS, CA 92240	ACTIVE	9.8 miles	distance
99474	MARCUS GUTIERREZ	13205 S CACTUS DR , DESERT HOT SPRINGS, CA 92240	ACTIVE	4.3 miles	no equipment listed
91462	MAVERICK AUTOMOTIVE	65-917 10TH ST , DESERT HOT SPRINGS, CA 92240	ACTIVE	4.3 miles	CFC recycling
63542	MAVERICK GAS & AUTO	66271 PIERSON BLVD , DESERT HOT SPRINGS, CA 92240		4.0 miles	gas station
150598	MAYER LUCE DEVELOPMENT GROUP	VARIOUS LOCATIONS IN SCAQMD , DESERT HOT SPRINGS, CA 92240	ACTIVE		403 fugitive dust
78324	MISSION LAKES COUNTRY CLUB	8484 CLUB HOUSE BLVD , DESERT HOT SPRINGS, CA 92240	ACTIVE	5.7 miles	gas tank
5619	MISSION SPRINGS WATER DIST	17-400 SUNRISE RD , DESERT HOT SPRINGS, CA 92240	ACTIVE	7.1 miles	distance

Facility ID	Facility Name	Facility Address	Facility Status	Distance from Site	Reason Eliminated
7720	MISSION SPRINGS WATER DISTRICT	14601 VERBENA DR , DESERT HOT SPRINGS, CA 92240	ACTIVE	5.0 miles	1000 Kw, 1480 Hp emergency generator operates <199 hrs/yr
147074	MISSION SPRINGS WATER DISTRICT	66920 DILLON RD , DESERT HOT SPRINGS, CA 92240	ACTIVE	4.6 miles	250 Hp emergency generator operates <199 hrs/yr
137800	MISSION SPRINGS WATER DISTRICT	14501 VERBENA DR , DESERT HOT SPRINGS, CA 92240		5.0 miles	gas tank
35960	MOBIL DLR, ED BERRY, DESERT HOT SPRINGS	66271 PIERSON BLVD , DESERT HOT SPRINGS, CA 92240		4.0 miles	gas station
148987	NBA INVESTMENT INC	22755 PALM DR , DESERT HOT SPRINGS, CA 92240	ACTIVE	5.5 miles	gas station
144122	NEW CINGULAR WIRELESS PCS, AT&T MOBILITY	70500 VARNER RD , DESERT HOT SPRINGS, CA 92240	ACTIVE	11.0 miles	distance
108077	OLIVER & WINSTON INC, WINSTON TIRE CO DB	14010 PALM DR , DESERT HOT SPRINGS, CA 92240	ACTIVE	4.3 miles	CFC recycling
115783	PALM MINI MART INC, ARCO AM/PM,DBA	22755 PALM DR , DESERT HOT SPRINGS, CA 92240		5.3 miles	gas station
117764	PALM SPRINGS UNIFIED SCHOOL DISTRICT	65850 PIERSON BLVD , DESERT HOT SPRINGS, CA 92240	ACTIVE	3.8 miles	gas tank
58001	PRESTIGE STAS INC #5202 (ARCO)	12775 PALM DR , DESERT HOT SPRINGS, CA 92240		4.3 miles	gas station
19440	REGAL APPARELMASTER	12085 PALM DR , DESERT HOT SPRINGS, CA 92240		4.3 miles	out of business 10/80
105059	RICHARD HEGGE,KEITH DICK, DANIEL CLEARY	66465 FLORA AVE , DESERT HOT SPRINGS, CA 92240	ACTIVE	4.3 miles	CFC recycling
150546	RIVERSIDE COUNTY FIRE DEPARTMENT	11535 KAREN AVE , DESERT HOT SPRINGS, CA 92240	ACTIVE	2.1 miles	72 Hp emergency generator operates <199 hrs/yr, LP gas
63936	ROBERT LUCAS AUTOBODY	15775 PALM DR , DESERT HOT SPRINGS, CA 92240	ACTIVE	4.3 miles	CFC recycling
77422	ROESCH BUS LINES INC	15501 LITTLE MORONGO RD , NORTH PALM SPRINGS, CA 92240	ACTIVE	2.6 miles	gas tank
117794	ROSE MORTUARY, ROGER H. LORI, DBA	66414 PIERSON BLVD , DESERT HOT SPRINGS, CA 92240	ACTIVE	4.1 miles	permit active since 1998
94303	SEACOR/SCIENCE & ENG. ANALYSIS CORP	12775 PALM DR , DESERT HOT SPRINGS, CA 92240	ACTIVE	4.3 miles	VOC source, soil vapor extraction
91858	SPA CITY MOTORS, INC.	13875 PALM DR , DESERT HOT SPRINGS, CA 92240	ACTIVE	4.3 miles	CFC recycling
91940	SPA CITY TIRE & AUTO	65321 TWO BUNCH PALMS , DESERT HOT SPRINGS, CA 92240	ACTIVE	4.3 miles	CFC recycling
146095	SPECTRUM CUSTOM DESIGN	VARIOUS LOCATIONS IN SCAQMD , DESERT HOT SPRINGS, CA 92240	ACTIVE	4.3 miles	no equipment listed
119253	SPECTRUM CUSTOM DESIGN, INC	65242 SAN JACINTO LN , DESERT HOT SPRINGS, CA 92240	ACTIVE	2.8 miles	applications cancelled 10/05, 1/06
28956	TEXACO DLR, EDWARDS ENTERPRISES	12021 INDIAN AVE , DESERT HOT SPRINGS, CA 92240		2.3 miles	gas station
117652	TEXACO DLR, VIRGINIA GARBUTT, DBA	12021 INDIAN / PIERSON AVE , DESERT HOT SPRINGS, CA 92240		2.3 miles	gas station
20420	TRI PALM ESTATES	32-700 DESERT MOON DR , THOUSAND PALMS, CA 92240	ACTIVE	14.3 miles	distance

Facility ID	Facility Name	Facility Address	Facility Status	Distance from Site	Reason Eliminated
26122	TWO BUNCH PALMS	67-425 TWO BUNCH PALMS TRAIL , DESERT HOT SPRINGS, CA 92240		4.9 miles	out of business 4/82
78977	VERIZON CALIFORNIA INC	70-721 DILLON RD , DESERT HOT SPRINGS, CA 92240	ACTIVE	8.2 miles	distance
80458	VERIZON CALIFORNIA INC	79 RELAY STATION RD , DESERT HOT SPRINGS, CA 92240	ACTIVE	4.3 miles	64 Hp emergency generator operates <200 hrs/yr
80443	VERIZON CALIFORNIA INC	66540 1ST ST , DESERT HOT SPRINGS, CA 92240	ACTIVE	4.6 miles	application rejected 4/06
134419	VONS FUEL CENTER #2177	14030 PALM DR , DESERT HOT SPRINGS, CA 92240	ACTIVE	4.3 miles	gas station
62045	WADSWORTH CONST. CO.	PALM DR , DESERT HOT SPRINGS, CA 92240	ACTIVE	4.3 miles	no equipment listed
59557	WESTCO DRYING INC	69100 20TH AVE , DESERT HOT SPRINGS, CA 92240	ACTIVE	7.2 miles	distance

Source: SCAQMD FIND (Facility INformation Detail) database - all facilities in zipcode 92240

APPENDIX A-3

MITSUBISHI BREAKER INFORMATION

From: Malmedal, Keith
To: johnseidler@spectrumenergy.com
Cc: deanfelton@spectrumenergy.com
Sent: Wednesday, October 10, 2007 12:19 PM
Subject: 230kV Breaker Questions

John:

Below please find the answers to the breaker questions you asked about the breakers for CPV. This is for Mitsubishi breakers.

Thanks

Keith

From: Jessica [mailto:jessica@LewisAssociatesInc.com]
Sent: Wednesday, October 10, 2007 1:13 PM
To: Malmedal, Keith
Subject: 230kV Breaker Questions

Keith,

Meppi's responses are below. I attached a brochure for the 230kV breakers.

Please let us know if you need anything else.

Thanks,

Jessica Wilson

Lewis Associates, Inc.
Ph: 303-232-7273
Fax: 303-232-7292
www.lewisassocinc.com

From: Jessica [mailto:jessica@LewisAssociatesInc.com]
Sent: Tuesday, October 09, 2007 12:50 PM
To: Hampe, Chuck
Cc: Jim houlihan; Mike Johnson
Subject: 230kV Breaker Questions

Chuck,

I'm not sure if you are the correct contact person for this request:

Our client is doing some permitting in CA for a project called CPV Sentinel and has questions regarding 230kV breakers:

What is the expected leak rate for both 1200A & 3000A breakers?

Answer: <1% per year.

How many pounds of SF6 are in both types of breakers?

Answer: Same breaker only nameplate difference. 127 pounds for a standard 40kA breaker.
(Note added by Spectrum: Brochure documents 126 lbs per breaker)

What is the time & number of operations between maintenance intervals?

Answer: 4000 operations for 0-900A interruptions; 2000 operations for rated continuous current interruptions: 20 full fault interruptions or accumulated equivalent. Major maintenance at 12 years. Mechanism is totally maintenance free.

Do you have any literature that shows the breaker and has this information?

Answer: Website has the brochure for the breaker. Information above info isn't on the brochure though.

Thank you,

Jessica Wilson

Lewis Associates, Inc.
Ph: 303-232-7273
Fax: 303-232-7292
www.lewisassocinc.com

This e-mail and any attachments may contain confidential, proprietary, or trade secret information of Mitsubishi Electric Power Products, Inc. Unauthorized disclosure prohibited.

MITSUBISHI ELECTRIC
POWER PRODUCTS, INC.

SF_6 CIRCUIT BREAKER

DEAD TANK TYPE

MODEL: 200-SFMT-40SE
200-SFMT-50SE

Introduction

Mitsubishi Electric Power Products, Inc. is an affiliate of Mitsubishi Electric Corporation.

Factory

Mitsubishi Electric Power Products manufacturing facility is located in Warrendale, Pennsylvania, a suburb of Pittsburgh. This location, along with an office in Los Angeles, California, serves as center for product service and training.

Evolutionary Design

Thousands of SFMT breakers rated at transmission voltages through 1100kV have been installed and are operating reliably on T&D systems worldwide. Introduced in 1974, the design is based on proven engineering principals and extensive development and testing.

The SFMT breaker features isolated phase dead tanks supported by a galvanized steel frame. Each tank houses a single-break puffer interrupter and supports two porcelain or composite bushings. The tanks and bushings are pressurized with SF6 gas.

The frame also supports the control cabinet. It houses spring-type operating mechanisms, linkages and the control circuits.

TYPE	200-SFMT-40SE	200-SFMT-50SE
Voltage (max kV)	245	245
BIL (kV Crest)	900	900
60 Hz withstand (kV)	425	425
Continuous Current (A)	1200 / 2000 / 3000	1200 / 2000 / 3000
Interrupting Current (kA)	40	50
Interrupting Time (cycles)	3	3
Total Weight (lbs / kgs)	10,550 / 4,785	10,550 / 4,785
Weight of SF_6 (lbs / kgs)	126 / 57	126 / 57

Revolutionary Performance

The SFMT breaker reflects Mitsubishi Electric's commitment to supply power circuit breakers with extended service lives, that meet or exceed the most demanding specifications for interrupting, insulating, and current-carrying capabilities. The design and performance of all breakers are fully verified in accordance with the procedures of ANSI C.37 and IEC 62271-100, and by procedures at Mitsubishi's laboratories that subject the breakers to conditions that are considerably more comprehensive and severe.

These procedures have confirmed the safety and ruggedness of Mitsubishi breakers. For example, tests confirm Mitsubishi breakers withstand 10,000 mechanical operations and severe seismic forces, and that they operate reliably in extremely low or high temperatures.

Users also report extraordinarily low cost of ownership based on exceptional reliability, application flexibility, safety, and ease of maintenance.

Features of the SFMT Design Insulation

- Dead Tank Construction
- Only SF_6 for Open Gap Insulation
- No Solid Insulation Bridging the Open Contacts
- Low Operating Pressure (71 psig @ 20°C)

Primary Electrical Parts/Interrupters

- True Puffer Interrupters
- Contacts Easily Accessible for Inspection and Changeout
- Verified Full Dielectric and Interrupting Rating at Lockout Pressure
- High Strength Porcelain or Composite Bushings
- Integral NEMA 4-hole bushing terminal

Application Flexibility

- Mechanically Tested and Verified to –50°C with tank heaters
- Definite Purpose Capacitive Current Switching Capability
- Reactor Switching Capability
- Tested and Verified for Seismic Applications
- Quiet Operation; Suitable for Urban Installations

Mechanical Operations

- Spring Type Operating Mechanism
- Universal Type Spring Charging Motor (AC/DC)
- Quick Spring Charging for O-CO-10 sec-CO Duty Cycle

Synchronous Opening at Maximum Arcing Time

- Controlling of Instant of Contact Separation During Re-Ignition-Free, Time Window Prevents:
  - Re-Ignition
  - Severe Overvoltages

Synchronous Closing

- Zero Voltage Closing Can Reduce:
  - Amplitude of Inrush Current
  - Damaging Transients in Components and Control Circuits
    - Elimination of Surge Arrester
- Peak Voltage Closing Can Reduce:
  - Amplitude of Inrush Current
  - Damaging Transients

Rapid Installation

- Bushings Shipped Installed
- Integral NEMA 4-Hole Bushing Terminals
- Complete Breaker Factory Assembled and Production Tested
- Lightweight to Minimize Foundation Size

Controls

- Space for Minimum Two BCTs per Bushing
- Synchronous Controlled Open and/or Close

Proof

- Tested and Verified for 90% Short Line Fault
- Tested and Verified to Exceed ANSI and IEC Standards
- Verified in Environmental Test Lab
- Production Tested as a Fully Assembled Breaker

Options

- Tank Heaters for Low Temperature Applications
- High Altitude
- Composite Insulators

Features to Reduce Installation and Maintenance

All SFMT breakers are fully assembled, pressurized and tested to ANSI or IEC standards and Mitsubishi standards prior to shipment. Each breaker is shipped with 5 psig of SF6 gas. Installation is completed rapidly and easily. Site work is limited to removing all packing, bolting the sub-frame to the foundation and bolting the breaker to the sub-frame. Then, using bottled SF6 gas, the interrupter tanks and bushings are filled to operating pressure, and the control and power leads are connected. The breaker is then ready for final inspection and any field testing required by the user.

The SFMT breaker operates with virtually no maintenance; scheduled inspections are completed quickly and easily. For example, the mechanism must be lubricated only every six years during normal inspections.

Critical interrupter components (stationary and moving arcing contacts and nozzles) need only be inspected after 2000 operations at rated load current. In the event of back-to-back capacitive switching application, the critical interrupter components need to be inspected after 1000 operations at rated load current. The components are removed easily by simply unbolting the tank inspection cover. Unlike other designs, there are no interrupter valves, seal rings, solid insulation, screens to inspect, or bushings to be removed.

Solutions for Surge Elimination by Conventional GCB vs. Synchronous Switching GCB

Load	Conventional Practice	Synchronous Switching
Transformer	Closing Resistor	Synchronous Closing (Peak Voltage Point)
Line	Closing Resistor Surge Arrester	Synchronous Closing (Zero Voltage Point)
Shunt Capacitor	Closing Resistor Series Reactor	Synchronous Closing (Zero Voltage Point)
	Surge Arrester	Synchronous Opening (Maximum Arcing Time)
Shunt Reactor	Opening Resistor Surge Arrester	Synchronous Opening (Maximum Arcing Time)

>> THE DETAILS THAT REDUCE MAINTENANCE COSTS <<

- Stationary arcing contacts, moving arcing contacts and nozzles are easily removed to expedite inspections or replacements.

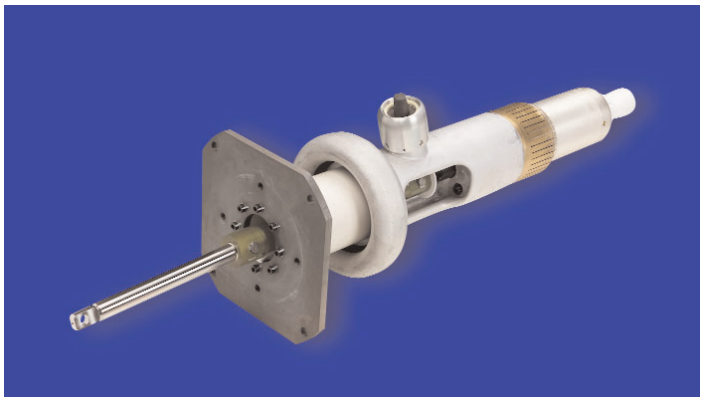

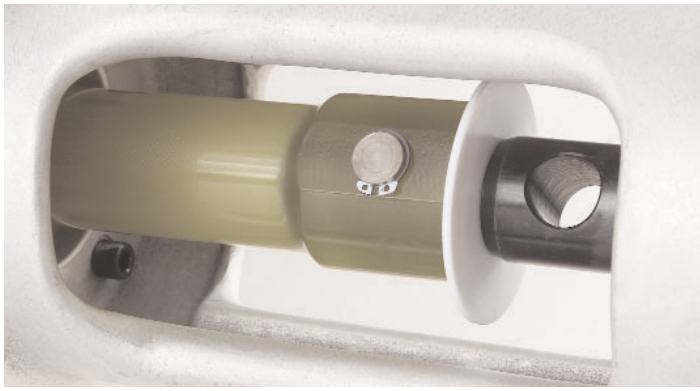

>> THE DETAILS THAT INHIBIT CORROSION <<

- Neoprene gasket rings seal glass inspection windows to the control cabinet.

- Rugged steel frames (upper & lower) are fully galvanized. Interrupter tanks are aluminum. Bushing current transformer covers are aluminum. A special polyurethane enamel protects the control cabinet.

- Six non-conductive vinyl filter systems protect control components from airborne contaminants.

- The interrupter operating rods, linkages and rotating shaft are fully enclosed to protect components and prevent accidental entry.

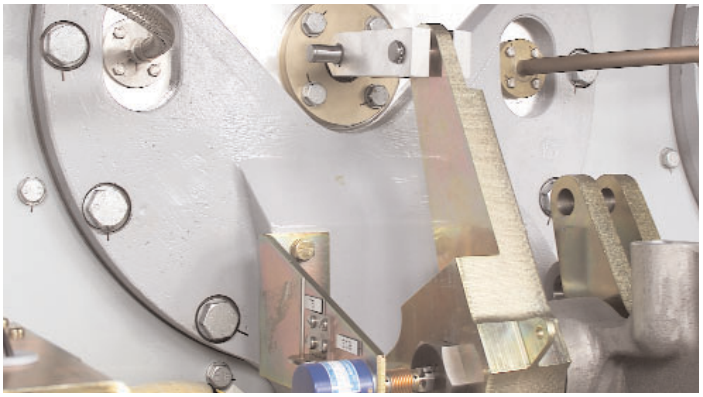

>> THE DETAILS THAT EXTEND SERVICE LIFE <<

- Clear silicon sealant on every piece of exterior hardware assures the breaker remains environmentally robust. Silicon sealant on all flanges provides protection to the O-ring and eliminates SF_6 gas leaks.

- Internally glazed porcelains are more electrically track-resistant, provide greater mechanical strength and are easier to clean.

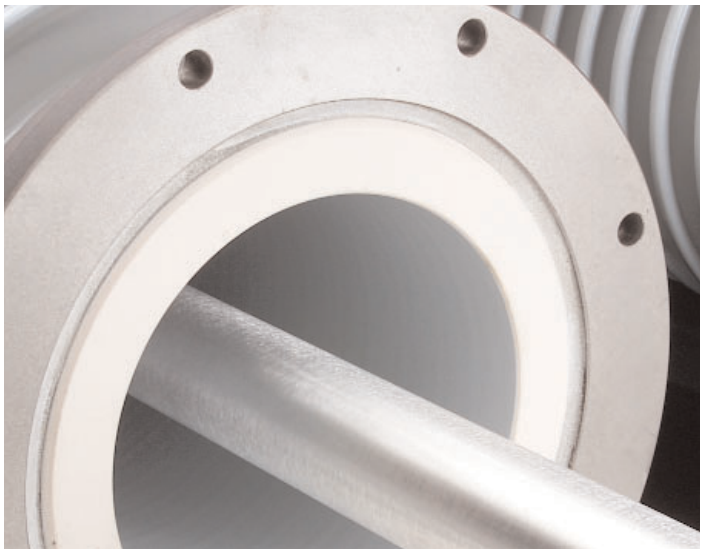

- Three point door latches assure tight housing closure.
- Robust hinges, latches, handles and other components withstand repeated rough handling. Door handle and hinges are stainless steel.

>> THE DETAILS THAT EASE INSTALLATION <<

- Instruction Book in a separate pocket shipped with each breaker.
- Bushings shipped installed.
- Integral 4-hole terminal pads are designed for easy connection of power leads.
- Lightweight to reduce foundation size.
- Full factory testing before shipment. Interrupter tanks are shipped with 5 psig SF_6

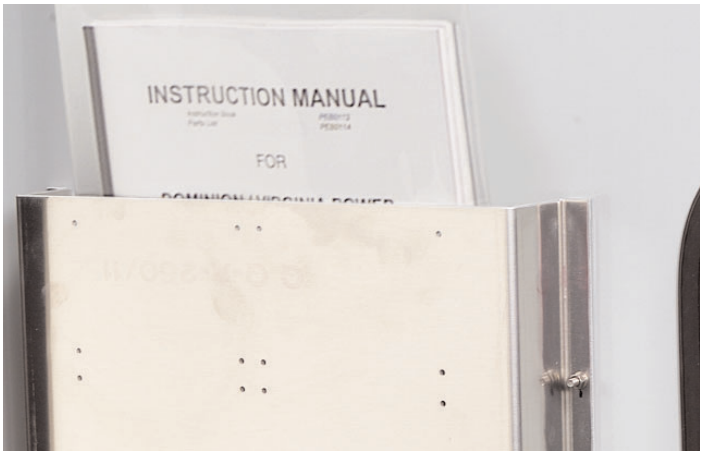

>> THE DETAILS THAT ENSURE SYNCHRONOUS SWITCHING <<

- 32-bit CPU used widely for digital relay units in transmission system.
- Memory storage to record the ambient temperature, opening/closing time, current and voltage waveform and travel signal for past 100 switching operations.
- Self-monitoring function of a failure of the controller itself.
- Function for a judgment of the success or failure of controlled switching and the occurrence of re-ignition.
- Proven to withstand environmental stress, such as fast transient surge, high and low temperature and mechanical vibration.
- Opening and closing operations via spring; idle time is not a concern.

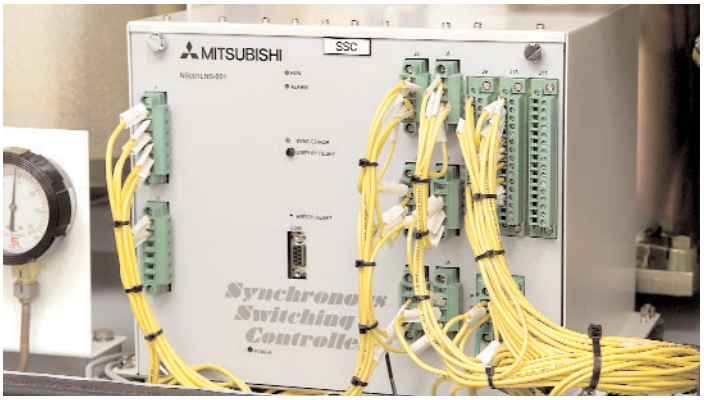

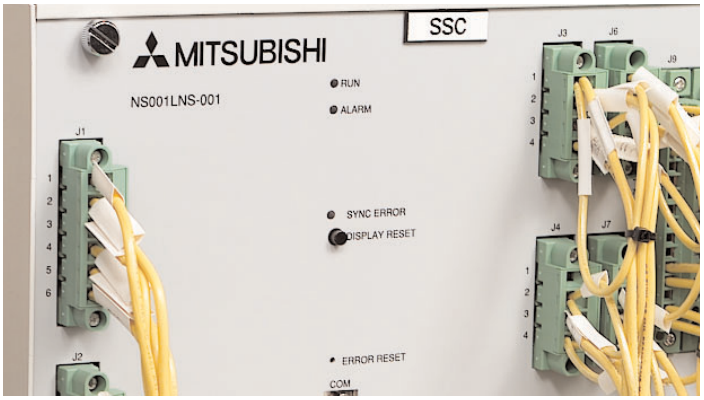

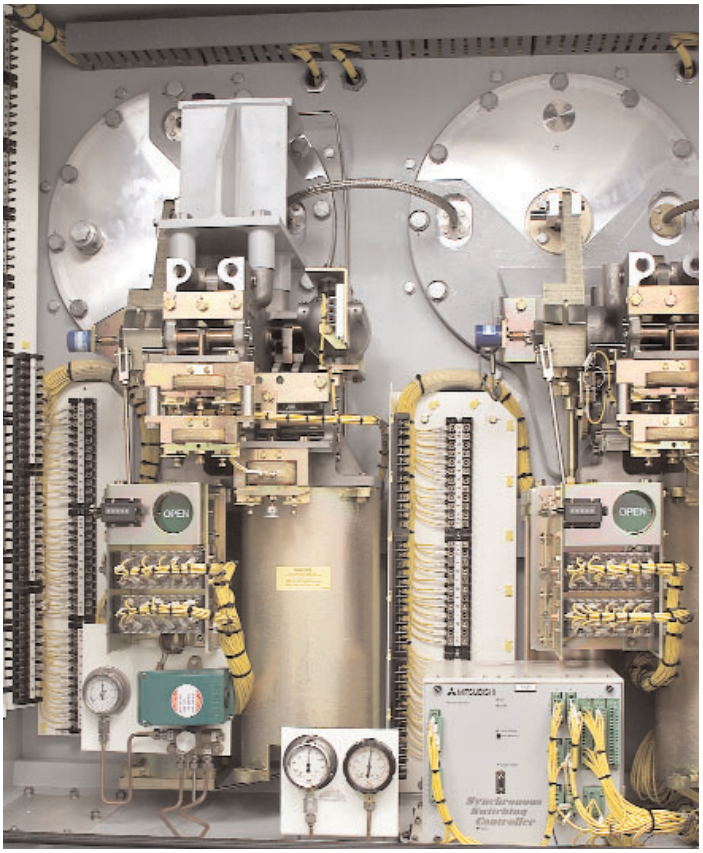

BM-1 Operating Mechanism

The Type BM-1 operating mechanism is carefully designed and time-proven. Over 5000 have been performing reliably since 1983.

Interrupters are opened and closed using energy stored in two heavy-duty helical springs, one to trip and one to close the breaker. A universal motor charges the closing spring, and its closing operation charges the tripping spring. The springs are always compressed, never in tension, greatly reducing stresses on components and end connections. Service life is extended and reliability is increased.

Puffer Interrupter

Design of the single-break puffer interrupter is advanced yet simple, a "true" puffer that operates reliably and positively. The interrupter features:

- **Less potential for dielectric failure caused by arc products:** the gap between open contacts is insulated only by SF_6 gas. Solid insulation that can degrade over time has been eliminated.

- **Increased interrupting capability:** the interrupter is tested and verified to interrupt 90% short line faults.

- **Less mechanical deterioration:** there are no check valves, seals or screens to wear, fail or maintain.

- **Positive Interruption:** contacts are not delayed and gas flow is unrestrained during interruption.

- **Rapid reclosing:** the interrupter is self-cleaning, with no delay necessary to purge contamination and/or arc products from previous interruptions.

- **Consistent and predictable interrupting:** mechanical springs of known and predictable force, open and close the interrupters.

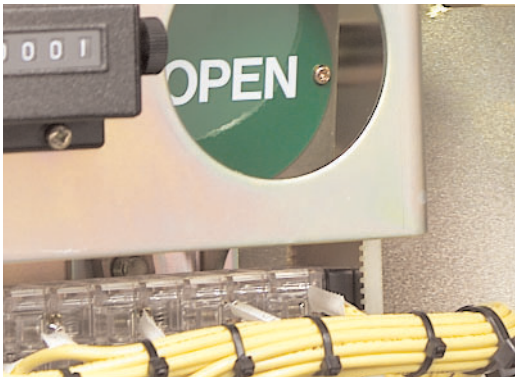

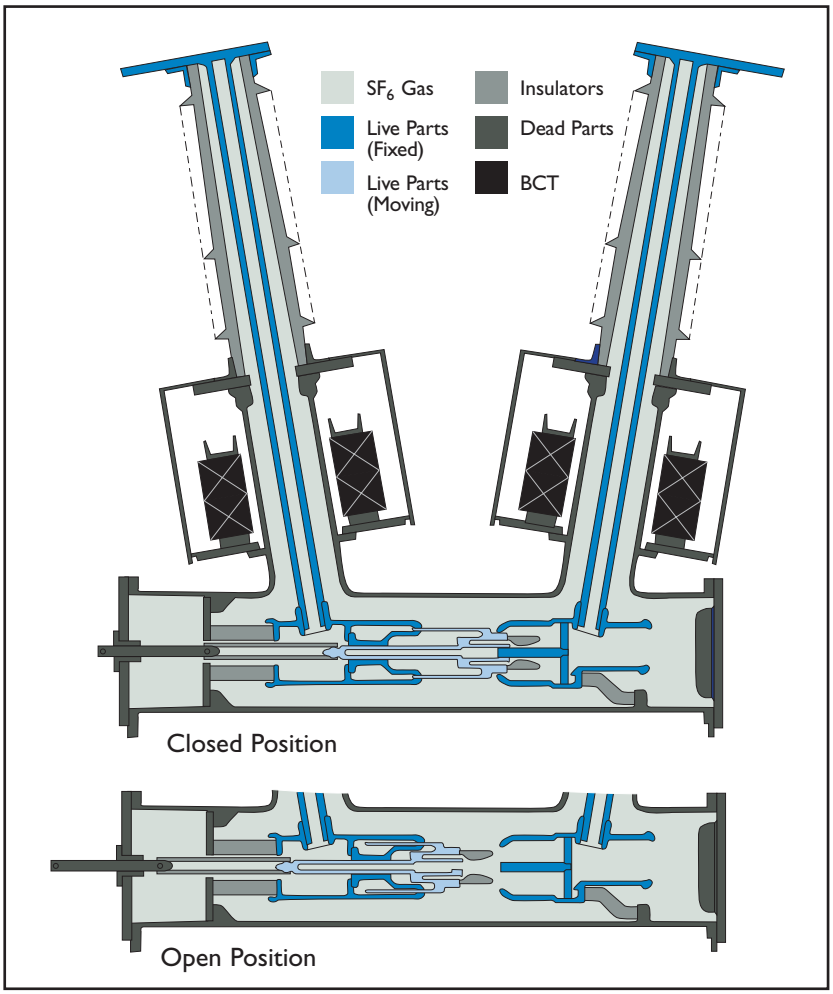

SF_6 Gas System

A common SF6 gas system serves all three pole units. Located in the control cabinet, the precise yet simple arrangement of the system eases filling, evacuation, inspection and monitoring while increasing safety. This monitoring system uses few components that can misoperate or fail causing false alarms, and by using the fewest possible seal points in combination with low static pressure, potential leak paths are greatly reduced.

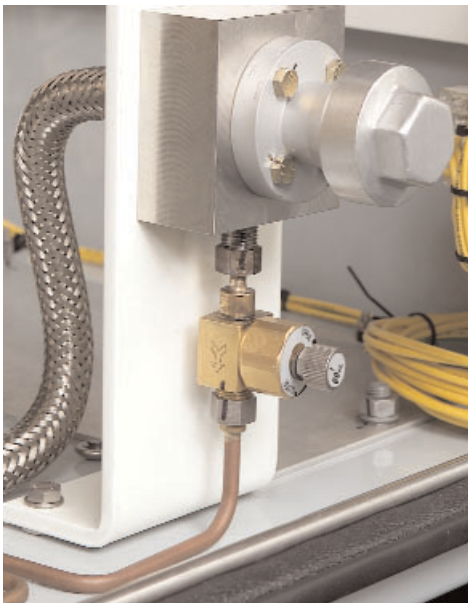

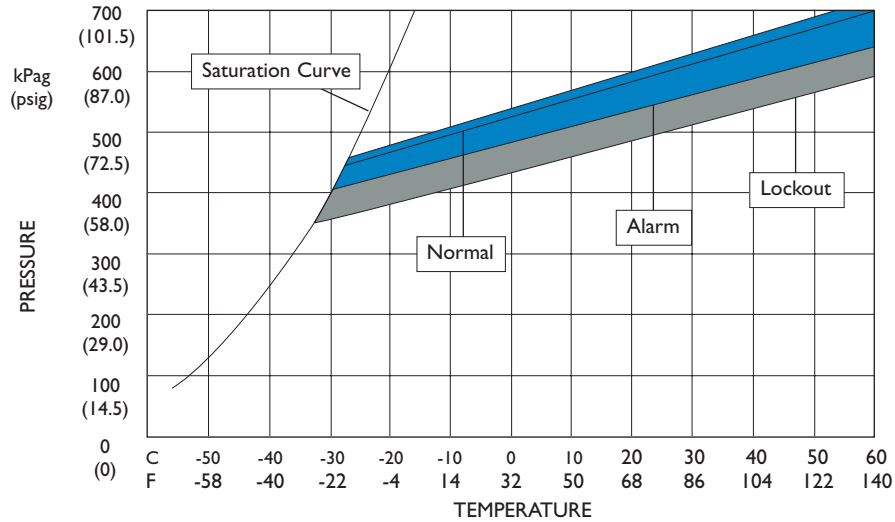

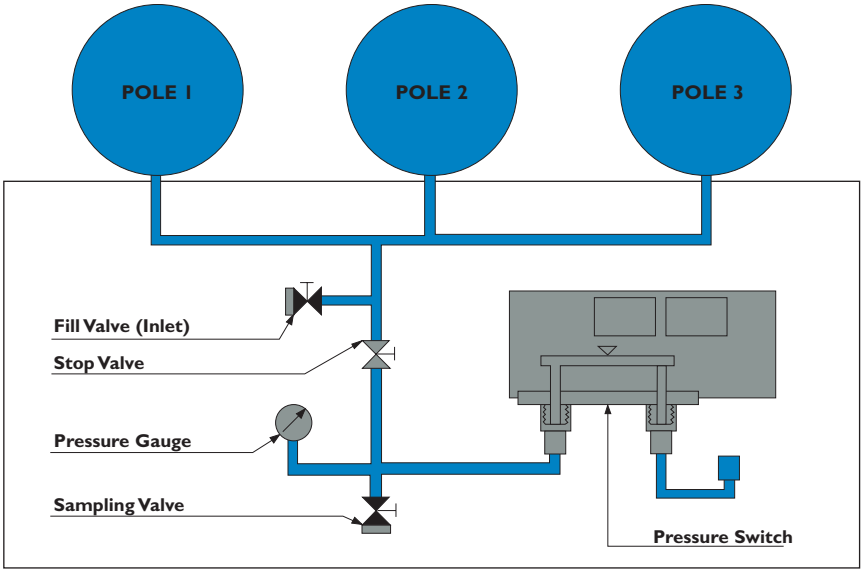

SF_6 Gas Monitoring System

>> DIMENSIONS IN INCH / MM <<

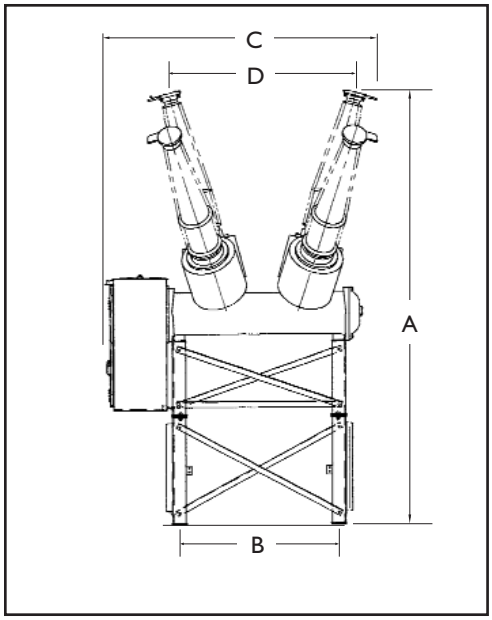

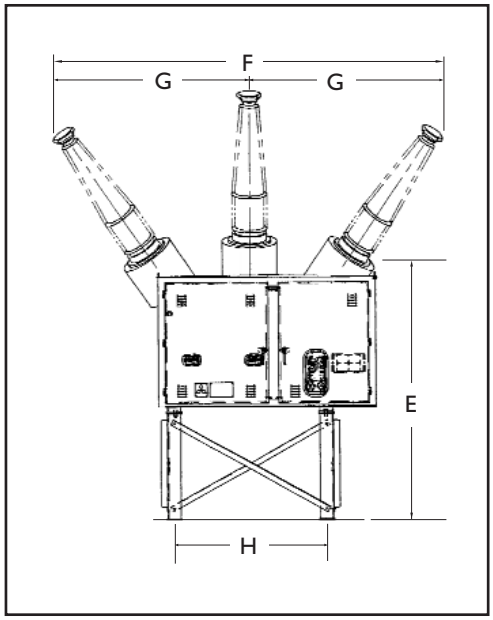

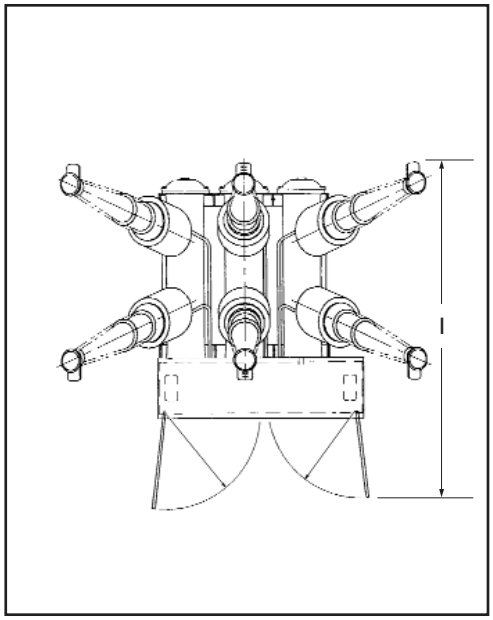

Dimensions in inch / mm

TYPE	200-SFMT-40SE	200-SFMT-50SE
A	192 / 4864	192 / 4864
B	71 / 1793	71 / 1793
C	122 / 3089	122 / 3089
D	84 / 2125	84 / 2125
E	118 / 2989	118 / 2989
F	177 / 4484	177 / 4484
G	84 / 2135	84 / 2135
H	68 / 1717	68 / 1717
I	165 / 4193	165 / 4193

MITSUBISHI ELECTRIC POWER PRODUCTS, INC.

512 KEYSTONE DRIVE WARRENDALE, PA 15086

PHONE: 724.772.2555 **FAX:** 724.772.2146

www.meppi.com

From: Jim houlihan
To: John Seidler
Cc: Dean Felton
Sent: Friday, October 12, 2007 12:09 PM
Subject: [Norton AntiSpam] FW: Mitsubishi answers for CPV project in Palm Springs, CA (Generator Main Circuit Breakers)

John,

Dean asked me to forward these answers to you in his absence. These are for the bag house (Main Generator circuit breakers). Mitsubishi Electric's web site FYI is www.Meppi.com.

Regards,

Jim Houlihan
Lewis Associates, Inc.
(303) 232-7273
Fax - (303) 232-7292
Visit us at www.lewisassocinc.com

From: Jessica [mailto:jessica@LewisAssociatesInc.com]
Sent: Tuesday, October 09, 2007 12:50 PM
To: Hampe, Chuck
Cc: Jim houlihan; Mike Johnson
Subject: NEI Engineering

Spectrum is doing some permitting in CA for a project called CPV Sentinel and has a few questions regarding main generator breakers:

What is the expected SF6 leak rate?

For GMCB is 0.1% per year

How many pounds of SF6 are in each breaker?

22 lbs for 20-SFMG-63A

What is the time & number of operations between maintenance intervals?

Our 20-SFMG-63A model uses BM-2 operating mechanism as SFMT breakers. 4000 operations for 0-900A interruptions; 2000 operations for rated continuous current interruptions: 20 full fault interruptions or accumulated equivalent. Major maintenance at 12 years. Mechanism is totally maintenance free.

20-SFMG-100 model uses hydraulic operating mechanism. 10 times for full short-circuit current interruption, 10,000 no load mechanical operations, 1,000 for rated continuous current interruption. Maintenance routine - every 12 years.

Do you have any literature that shows the breaker and has this information?

MEPPI website has the brochure for the breakers.

Thank you,

Jessica Wilson

Lewis Associates, Inc.
Ph: 303-232-7273
Fax: 303-232-7292
www.lewisassocinc.com

This e-mail and any attachments may contain confidential, proprietary, or trade secret information of Mitsubishi Electric Power Products, Inc. Unauthorized disclosure prohibited.

MITSUBISHI ELECTRIC

Changes for the Better

Hybrid Generator Main Circuit Breaker (HYBRID GMCB) TYPE 20-SFMG-63A

Main Ratings

Rated voltage	: 24/27.5kV
Rated continuous current	: 8000A(natural cooling)
Rated short-circuit current	: 63kA

MITSUBISHI HYBRID GENERATOR MAIN CIRCUIT BREAKER(HYBRID GMCB)

MITSUBISHI Hybrid GMCB is an integrated switchgear incorporating a circuit breaker (CB), a disconnecting switch (DS), earthing switches (ES), a starting disconnecting switch (SDS), current transformers (CT), a capacitor, voltage transformers (VT) and a surge arrester (SA) into one common unit. MITSUBISHI Hybrid GMCB provides you advanced and reliable generator main circuit system (GMCS).

① Space saving design by integrating CB, DS, ES, SDS, CT, and VT&SA into one common unit.

② High reliability by applying the advanced interruption technologies.

③ Labor savings during the installation, considering all assemblies are located in one common cubicle which is assembled in the factory. Maintenance is easily accomplished by the centralized location of the mechanisms and control equipment.

④ Power plant design flexibility by advanced mini-flux construction and direct connection with IPB.

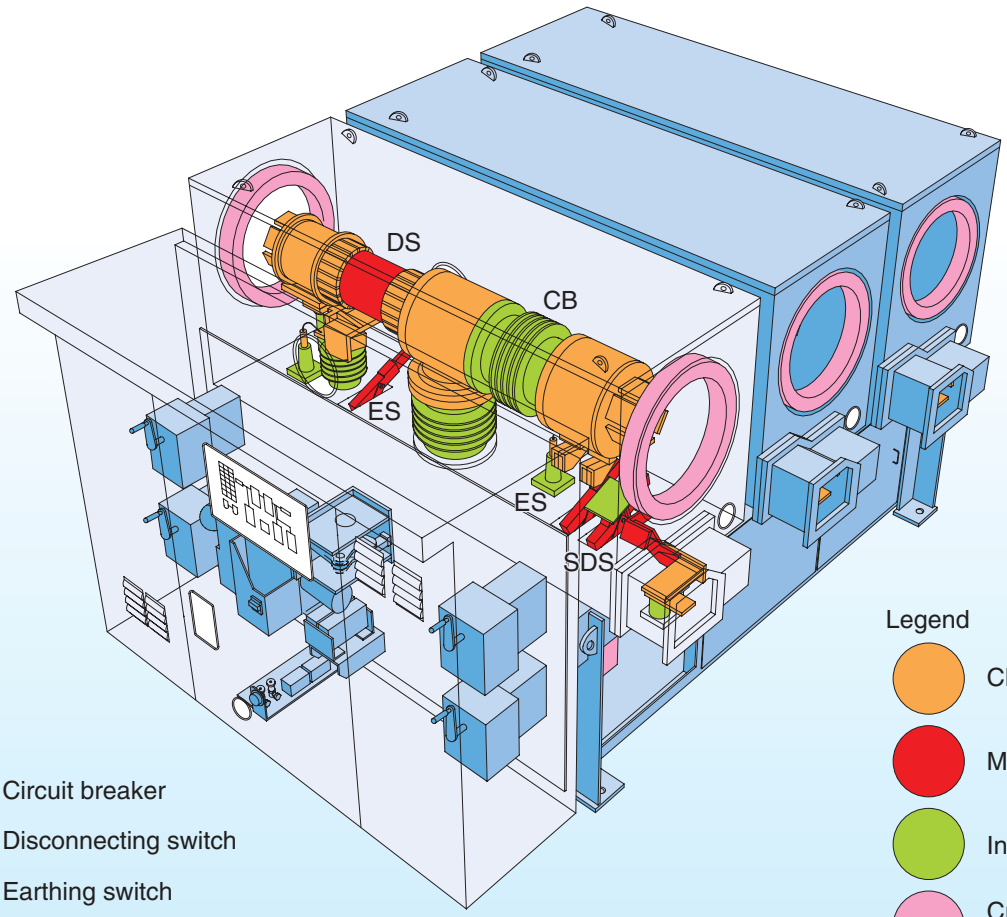

CB : Circuit breaker

DS : Disconnecting switch

ES : Earthing switch

SDS : Starting disconnecting switch

Legend

- Charged area
- Moving area
- Insulator
- Current transformer, VT&SA
- Enclosures, Supporting structure

Features of MITSUBISHI HYBRID GMCB

1. Space Saving

Integration of CB, DS, ES, SDS, CT, and VT&SA into a metal cubicle reduces required space for installation.

2. High Reliability

Application of current carrying parts, insulators and contacts used for MITSUBISHI switchgear based on over 35 years experience are accommodated in an airtight cubicle. For this reason these parts are hardly effected by outside atmosphere for long period.

3. Labor Saving

Full assembly and testing in our factory minimizes installation work and improves reliability, and centralizing mechanisms and control equipment simplifies maintenance work.

4. Power Plant Design Flexibility

Minimizing the magnetic field external to the equipment with mini-flux construction and direct connection with IPB achieves installation flexibility of the Hybrid GMCB.

Benefits of Application of GMCB

1.Elimination of Starting-up Transformer

Starting-up transformer, allied switchgears, and floor space for these apparatus are not required.

2. Elimination of In-house Bus

On starting and stopping generators, switching the in-house bus is not necessary and plant operations can be simplified.

3. Over-excitation Free

On starting generator, the risk of over-excitation would be eliminated.

4.Rationalization of Main Transformer

Main transformer for each generator would not be required.

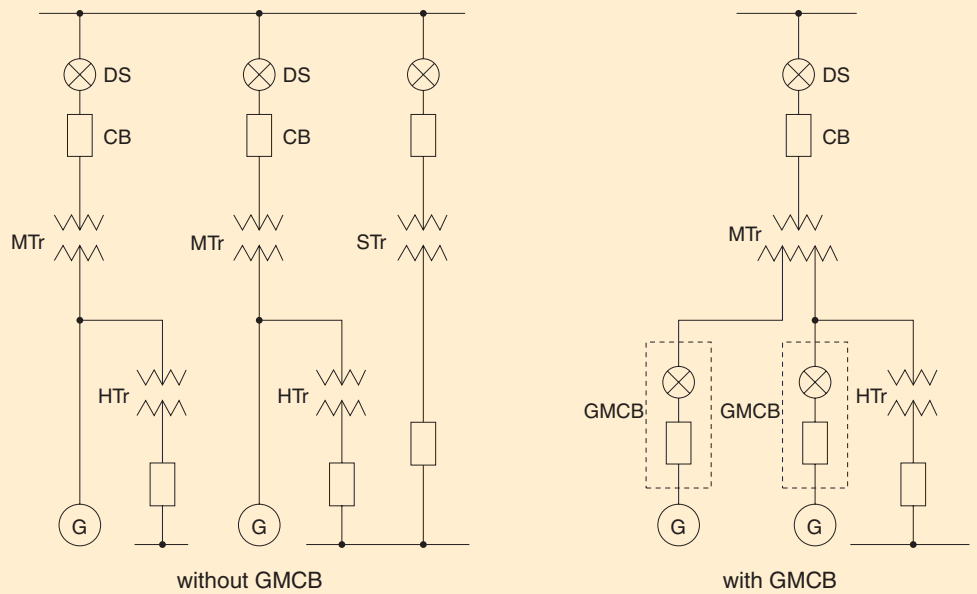

Fig.1 Comparison of Circuit Configuration

Outlines and Dimensions

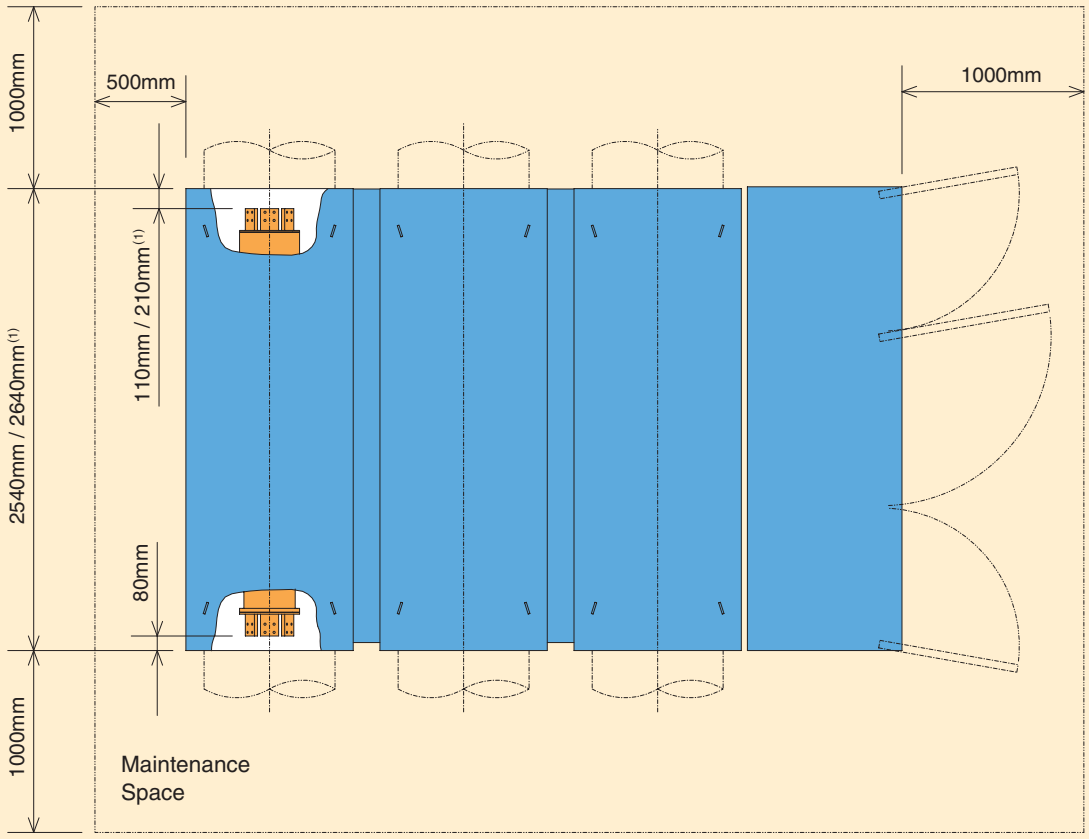

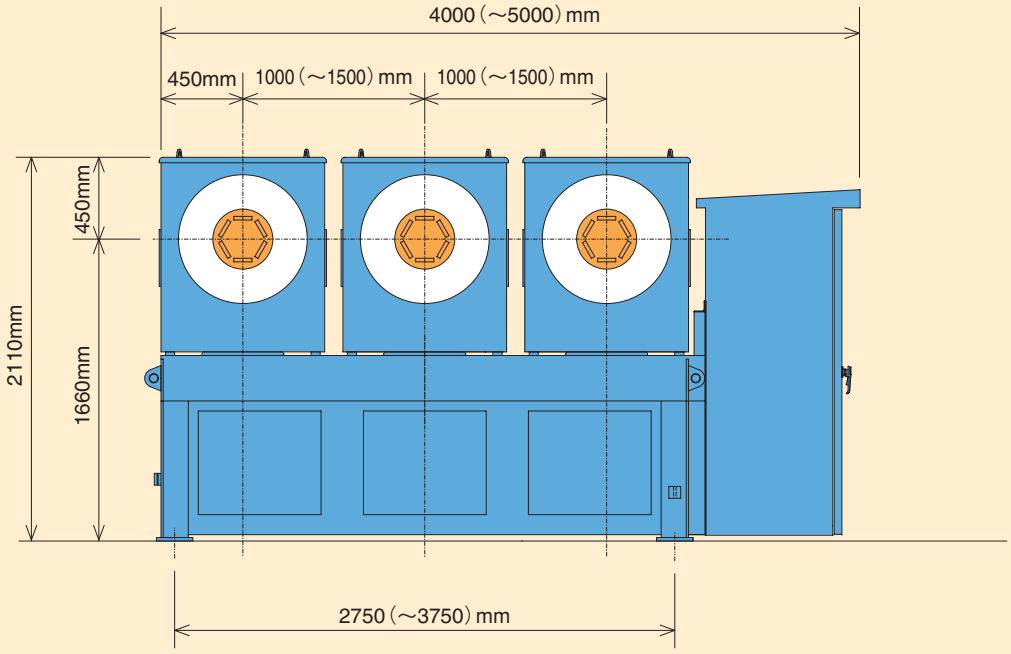

Weight : app.7000kg(2)

(1) Assembled with Starting-DS
(2) with maximum apparatus

Fig.2 Outline

Construction

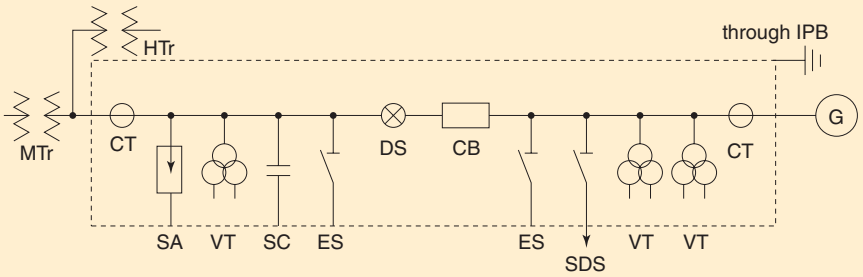

Fig.3 Single Line Diagram

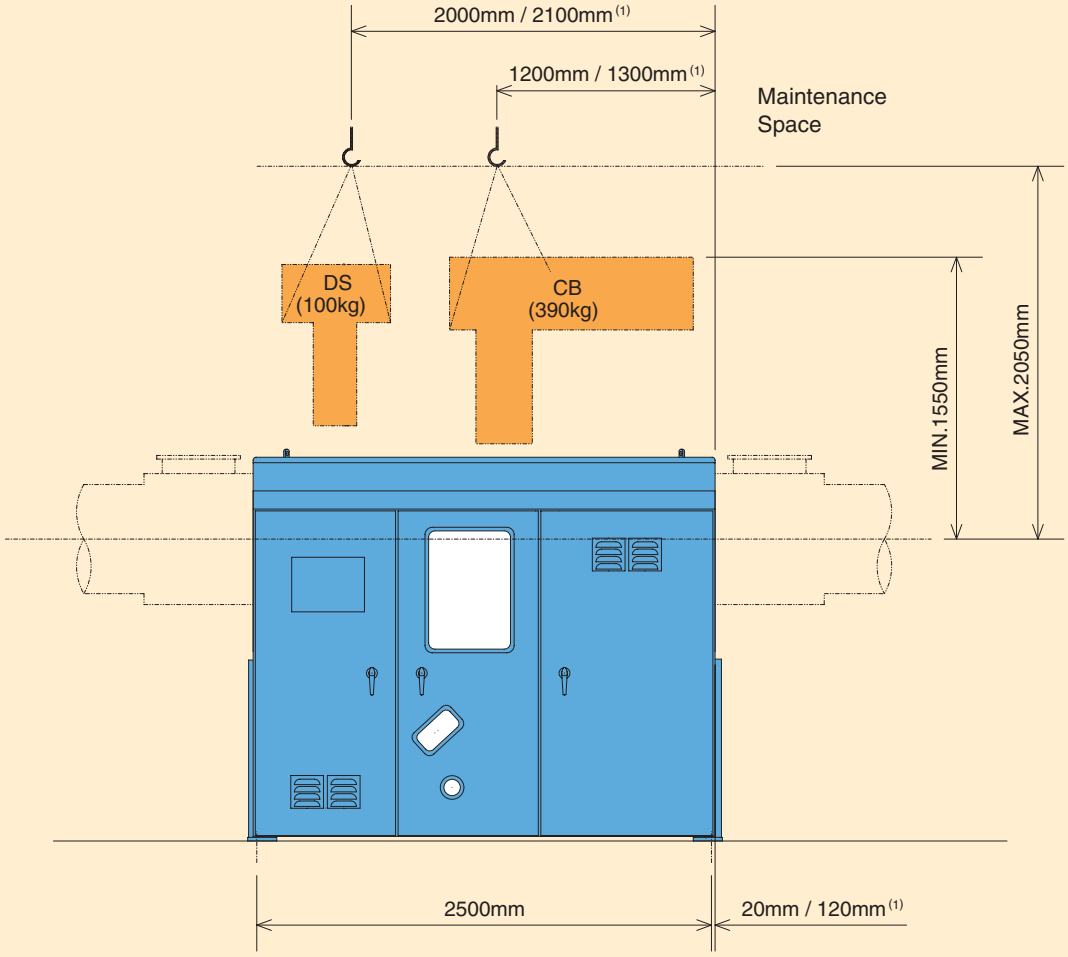

Circuit Breaker

Circuit Breaker

The circuit breaker has a compact structure with high performance, high reliability and easy maintenance. This has been developed by the accumulation many experiences from field installations of GMCB and the latest design technologies.

Interrupter

Interrupter is a dual flow puffer-type, which has an excellent interrupting performance at every current level. New materials and advanced analysis technologies have been developed for it.

Fig.4 shows the construction of the circuit breaker.
Fig.5 shows the principle of interruption.

The interrupter has two separate contact systems, one for load current carrying and the other for arc interruption. At closed position, it carries current through the fixed main contact, the puffer cylinder and the finger contact.

–Opening Operation–

When a trip signal is provided, movable parts including puffer cylinder start opening process. At first main contacts are separated, and then arc contacts are separated accordingly arc arise between contacts.
SF6 gas inside puffer cylinder is compressed by the opening motion of the puffer cylinder and that it is bursted into the nozzle area where the arc is drawn between the arc contacts. The thermal energy of arc also pressurized SF6 gas inside puffer cylinder and generates high speed gas flow in nozzle. Nozzle concentrates the gas flow to arc and the gas flow cools it efficiently.

–Closing Operation–

When a close signal is provided, movable parts start the closing process. At first arc contacts, then main contacts are touched.

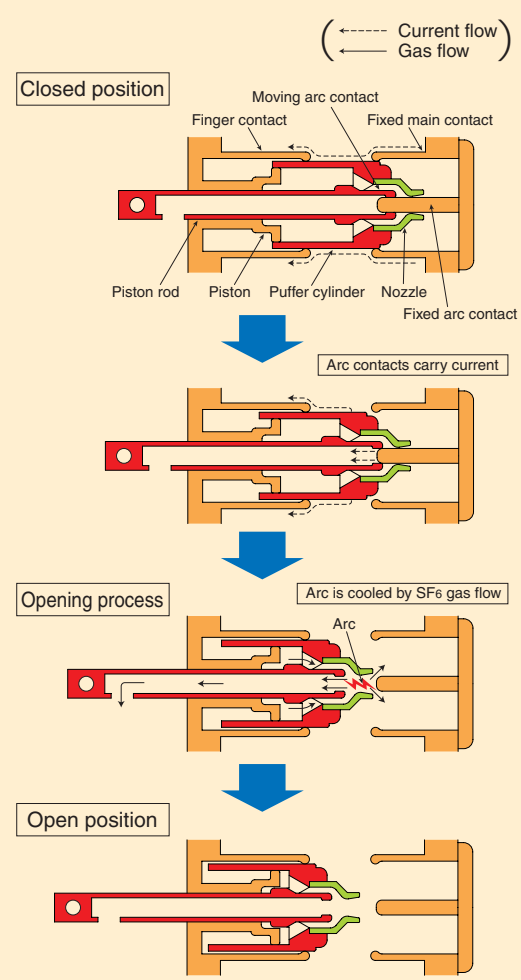

Fig.5 Principle of Interruption

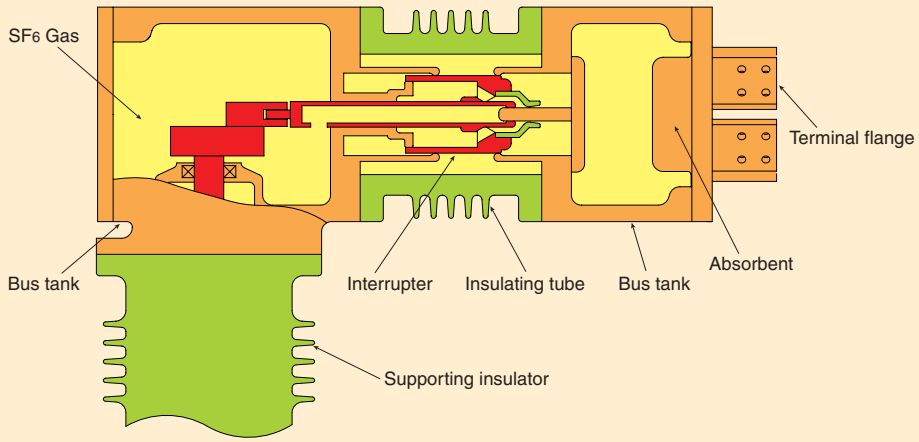

Fig.4 Construction of Circuit Breaker

BM-2 Operating Mechanism

The Type BM-2 operating mechanism is a carefully designed and time proven mechanism that utilizes a slight twist in a pair of torsion bars to develop the energy necessary to open and close the puffer interrupter. There is one pair of torsion bars for opening and one pair for closing. This mechanism has been in service since 1988.

A universal motor charges the closing torsion bars and operation charges the tripping torsion bars. Reliability and long service life have been confirmed by testing mechanisms to 50,000 operations and at up to 20% higher loads than normal operating conditions.

No maintenance is required on the BM-2 mechanism for the life of the breaker.

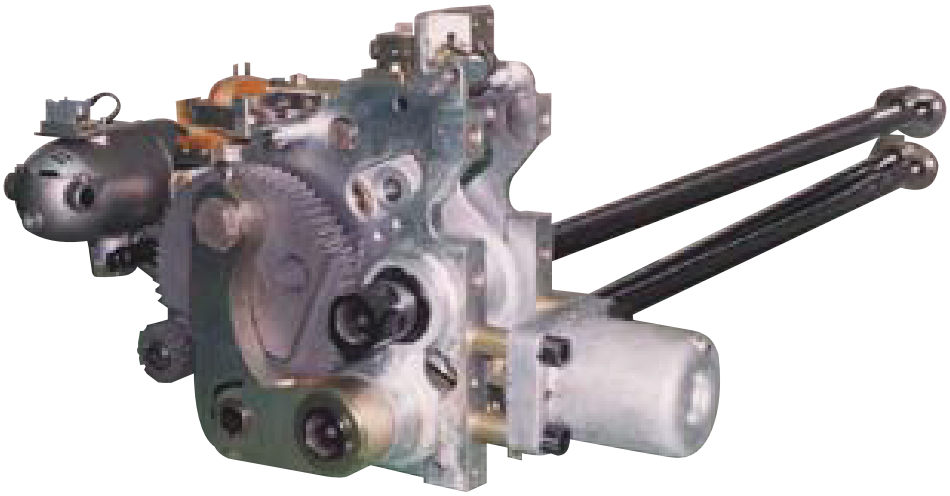

Fig.6 Type BM-2 Spring Operating Mechanism

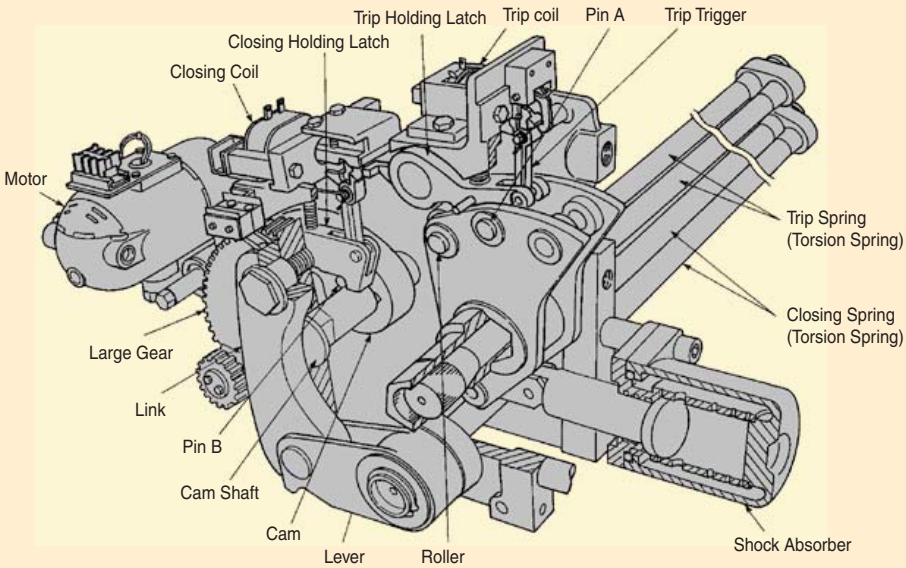

Fig.7 Construction of Type BM-2 Spring Operating Mechanism

Disconnecting Switch

The disconnecting switch is applied to open the main circuit after the circuit breaker is in open position.
The operating mechanism is driven by a motor. A window provided in the enclosure makes visual checking of contacts easy.
Fig.8 shows the construction of the disconnecting switch at open position as well as the closed position. The Open-Close operations are executed by the connecting and disconnecting of the moving contact with the fixed contact. The motor generates torque, and then this torque is transmitted to the lever through the reduction gear and the insulating rod. This lever makes the moving contact liner movement in the axial direction.

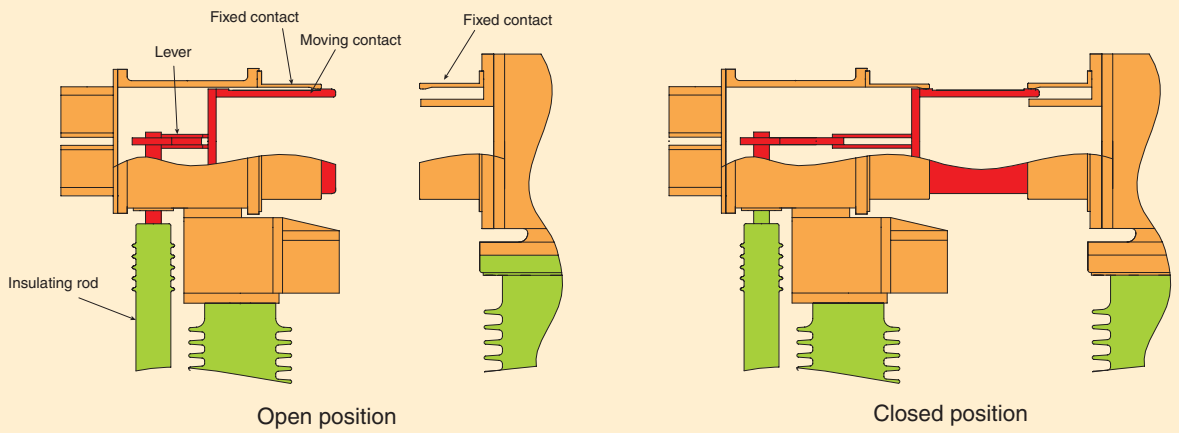

Fig.8 Construction and Operation of Disconnecting Switch

Earthing Switch

The earthing switch is used as a earthing device for the main circuit and other devices connected to the main circuit. Fig.9 shows the construction of the earthing switch at open position as well as the closed position. When the moving contact is connected with the fixed contact, the main circuit and other devices connected to the main circuit are earthed through the enclosure. The operating mechanism transmits torque through the link and lever, and it moves the moving contact to perform Open-Close operations.

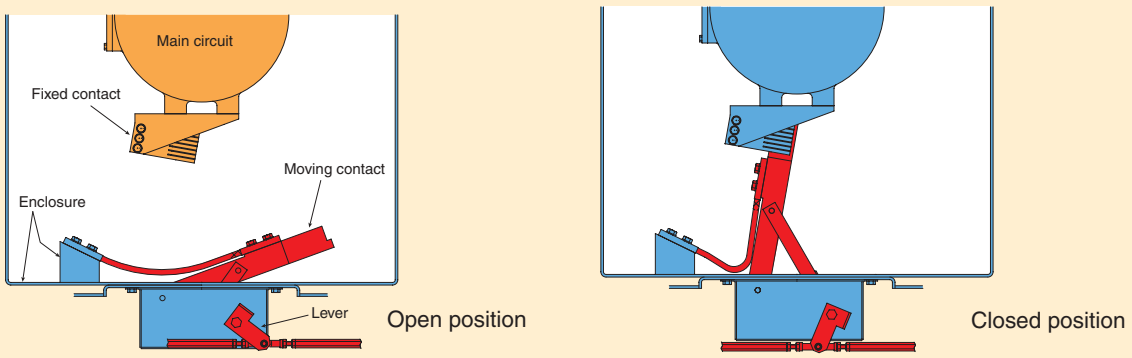

Fig.9 Construction and Operation of Earthing Switch

Starting Disconnecting Switch

The starting disconnecting switch is a device that provides a disconnecting switch to connect the static thyristor starting system and the generator main circuit in gas turbine plant.
Fig.10 shows the construction of the starting disconnecting switch at open position as well as the closed position.
When the moving contact is connected to the fixed contact, the circuit is connected to the main circuit and the static thyristor starting system. The operating mechanism transmits torque through the link and lever, and it moves the moving contact to perform Open-Close operations.

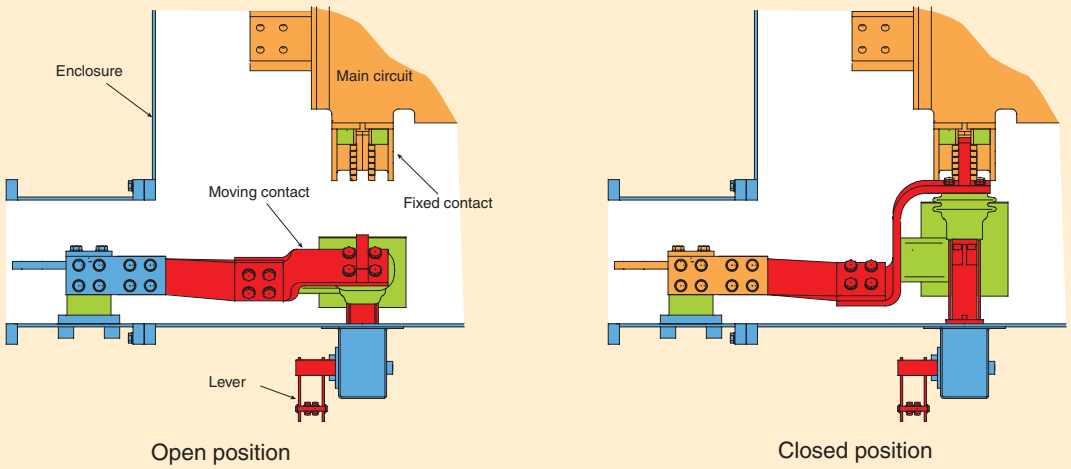

Fig.10 Construction and Operation of Starting Disconnecting Switch

Current Transformer

The current transformer is a fixed device that is directed mounted to the enclosure. The current transformer is used as a current monitoring device.

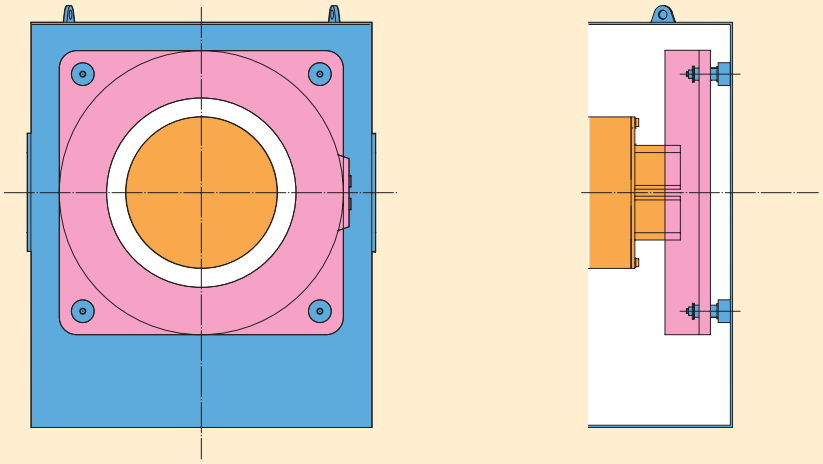

Fig.11 Current Transformer

VT & SA

This equipment is designed to measure the voltge of the generator main circuit and provide protection against abnormal voltages.
Fig.12 shows the standard layout of the VT&SA.

Voltage transformers, surge arresters, and capacitors in the VT&SA box are electrically connected with the main circuit in the enclosure the use of insulating bushings.

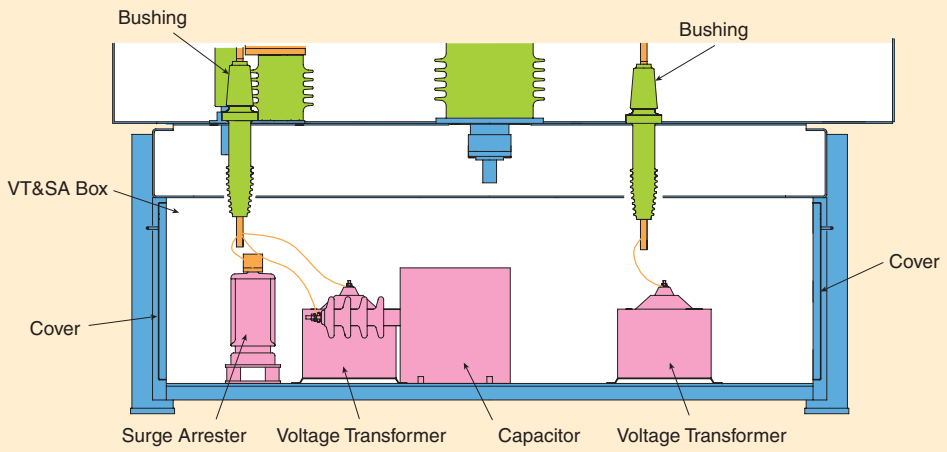

Fig.12 VT & SA

Connection to IPB

The GMCB conductors are connected to IPB conductors by bolted flexible connections.
The GMCB enclosures are to be welded to IPB enclosures at site.
Conductor terminals and flexible connection terminals are silver plated for reducing contact resistance.

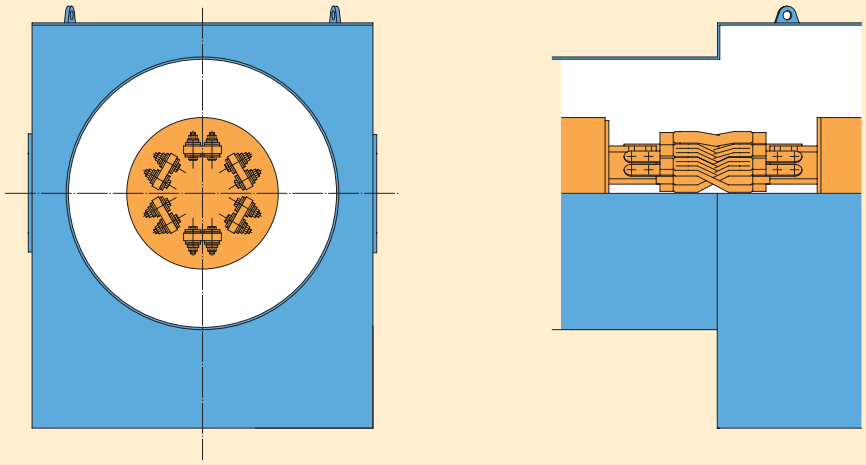

Fig.13 Connection to IPB

Maintenance

Inspection cover and windows on the enclosures, control units and SF6 gas monitoring unit that are centralized at the front panel of the equipment enable easy maintenance. Also the avoidance of erosion / wear of contacts in the circuit breaker can make maintenance-free operation for a long period.

Ratings

Type			20-SFMG-63A
Rated voltage		(kV)	27.5 (ANSI) 24 (IEC)
Rated frequency		(Hz)	50/60
Rated continuous current		(A)	8000-natural cooling
Power frequency withstand voltage		(kV)	60(1)/70(2)
Impulse withstand voltage		(kV)	125(1)/145(2)
Circuit breaker	Rated short-circuit current	(kA)	63
	Rated short-time withstand current	(kA)	63 (3s)
	Rated short-circuit duty cycle		CO-3min-CO
	Operating mechanism		Spring operation
	SF_6 gas pressure	(MPa・20℃)	0.5
Disconnecting switch	Rated short-time withstand current	(kA)	63 (3s)
	Operating mechanism		Electric motor operation
Earthing switch	Rated short-time withstand current	(kA)	63 (1s)
	Operating mechanism		Electric motor operation
Current transformer	Rated load	(VA)	15～200, depends on class
	Class	IEC	5P10～10P20 (Protection), 0.2～3.0 (Metering)
		ANSI	～C800 (Protection), 0.3 (Metering)
Voltage transformer	Rated output	(VA)	50～200, depends on class
	Class	IEC	3P～6P (Protection), 0.2～3.0 (Metering)
		ANSI	～0.3WXY1.2Z
Surge arrester	Type		Metal oxide
	Normal discharge current	(A)	10,000
Capacitor	Type		Oil filled
	Capacitance	(μF)	0.10, transformer side
Starting disconnecting switch	Rated voltage	(kV)	7.2 (IEC)
	Power frequency withstand voltage	(kV)	20(3) / 60(4)
	Impulse withstand voltage	(kV)	60(3) / 125(4)
	Rated continuous/short-duration current	(A)	2000-continuous / 4000-20minutes
	Operating mechanism		Electric motor operation

(1) to ground and across the circuit breaker contact gap
(2) across isolating gap
(3) in position “C” and “O” to earth
(4) across isolating gap

APPENDIX A-4

APPLICANT SEPTEMBER 17, 2007 LETTER TO SCAQMD REGARDING RULE 1309.1 COMPLIANCE

Competitive
Power Ventures, Inc.

September 17, 2007

Mr. Roy Olivares
South Coast Air Quality Management District
21865 Copley Drive
Diamond Bar, CA 91765

Dear Mr. Olivares:

This letter responds to the August 16, 2007 letter from Mr. Mohsen Nazemi of your agency requesting that Competitive Power Ventures provide documentation demonstrating that the proposed CPV Sentinel Energy Project (CSEP) will comply with the requirements of South Coast Air Quality Management District (SCAQMD) Rule 1309.1 as amended on August 3, 2007. Mr. Nazemi's letter indicates that the SCAQMD staff has made a preliminary determination that the CSEP is located in Zone 1.

The attached information documents the ability of the CSEP to meet the requirements applicable to an electric generating facility located in Zone 1. Please let me know if you have any questions.

Sincerely,

Mark Turner

Attachments

Cc: Mohsen Nazemi, SCAQMD
Roger Johnson, CEC
Mike Carroll, Latham & Watkins LLP

55 2nd Street, Suite 525, San Francisco, CA 94105
PHONE: (415) 293-1455
FAX: (415) 975-9886

Demonstration of CPV Sentinel Energy Project Compliance with Rule 1309.1 Zone 1 Requirements

PARAMETER	ZONE 1 REQUIREMENT UNDER RULE 1309.1	COMPLIANCE
Toxics Requirements		
Cancer Risk	<10 in a million	Maximum incremental cancer risk modeled at 0.856 in a million (see Section 5.4 of July 2007Application)
Hazard Index	<1.0	- Maximum Acute Hazard Index modeled at 0.030 - Maximum Chronic Hazard Index modeled at 0.115 (See Section 5.5 of July 2007 Application)
Cancer Burden	<0.5 calculated based on one in ten million risk level	Cancer burden value is zero, as there is no population (based on census data) at any receptors for which the predicted incremental cancer risk is at or above one in ten million. (Not shown in July 2007 Application)
Criteria Pollutant Requirements		
PM_{10} Emission Controls	NG only and ≤ 0.060 lb/MW-hr	Maximum full-load hourly PM_{10} emission rate at ISO conditions is 0.0586 lb/MW-hr /turbine. (Not shown in July 2007 Application). Data based on vendor model for turbines operating at ISO conditions.
NO_x Emission Controls	≤ 0.080 lb/MW-hr	Maximum full-load hourly NO_x emission rate at ISO conditions is 0.079 lb/MW-hr /turbine (Not shown in July 2007 Application). Data based on vendor model for turbines operating at ISO conditions.

Demonstration of CPV Sentinel Energy Project Compliance with Rule 1309.1 Zone 1 Requirements

PARAMETER	ZONE 1 REQUIREMENT UNDER RULE 1309.1	COMPLIANCE
Total Combined Gas Turbine PM_{10} Hourly Emissions	NSR BACT	PM_{10} emissions will be controlled through the exclusive use of clean-burning pipeline quality natural gas. This control technology has been widely and uniformly implemented for control of SO_2 and PM_{10} emissions from combustion turbines in California and throughout the United States, and is considered to be BACT for the facility. (see Section 6.1.4 of July 2007Application)
Gas Turbine PM_{10} 24-hour Impact	NSR Limit of 2.5 $\mu g/m^3$ per Gas Turbine	Maximum predicted impact of a single turbine on 24-hour PM_{10} concentrations is 2.4 $\mu g/m^3$ (See Section 4.6 July 2007 Application).
Gas Turbine PM_{10} Annual Impact	NSR Limit of 1.0 $\mu g/m^3$ per Gas Turbine	The maximum predicted impact of the entire facility, including eight simple cycle turbines, black start engine and firewater pump engine on annual PM_{10} concentrations is 0.63 $\mu g/m^3$ (see Table 4-5 of the July 2007 Application). Thus the contribution of each individual turbine is necessarily less than the limit of 1.0 $\mu g/m^3$.
Annual Hours of Operation Limit	No limit	Not Applicable to Zone 1.

APPENDIX A-5

APPLICANT OCTOBER 11, 2007 LETTER TO SCAQMD REGARDING RULE 1309.1 COMPLIANCE

650 Town Center Drive, 20th Floor
Costa Mesa, California 92626-1925
Tel: +714.540.1235 Fax: +714.755.8290
www.lw.com

LATHAM&WATKINS LLP

FIRM / AFFILIATE OFFICES
Barcelona, Brussels, Chicago, Frankfurt, Hamburg, Hong Kong, London, Los Angeles, Madrid, Milan, Moscow, Munich, New Jersey, New York, Northern Virginia, Orange County, Paris, San Diego, San Francisco, Shanghai, Silicon Valley, Singapore, Tokyo, Washington, D.C.

October 11, 2007

Mr. Roy Olivares
South Coast Air Quality Management District
21865 Copley Drive
Diamond Bar, CA 91765-4178

Re: Rule 1309.1(c)(5)(B) Compliance
Competitive Power Ventures, LLC (152707)

Dear Mr. Olivares:

On behalf of Competitive Power Ventures, LLC ("CPV"), we are responding to a letter dated September 14, 2007 from Mohsen Nazemi, SCAQMD Assistant Deputy Executive Officer, requesting information regarding the CPV Sentinel Energy Project ("CPV Sentinel") and Rule 1309.1(c)(5)(B).

CPV Sentinel is a proposed 850-megawatt (MW) natural gas-fired electric generation facility on 37 acres of land situated within unincorporated Riverside County. Key features of CPV Sentinel include quick-starting peaking capacity (requiring a mere 10-minute notice), the ability to instantaneously follow fluctuations in supply and demand (automatic generation control), and black start-up capability in the event of grid failure.

Rule 1309.1(c)(5)(B) requires CPV to demonstrate that renewable/alternative energy in lieu of natural gas-fired EGF is not a viable option for the power to be generated at the proposed site. The Rule defines the term "renewable/alternative energy" as "hydropower, wind and wave power, solar and geothermal energy, and fossil fuel-based energy [provided the emissions are no more than those from a fuel cell]." CPV has evaluated each of these alternative energy sources and has determined that none presents a viable option for replacing the power to be generated at the CPV Sentinel site under the current proposal.

Hydropower

Hydropower water turbines require harnessing energy from a damned water body or the kinetic energy from moving surface water. The proposed CPV Sentinel site has no moving surface water or water body for damming. A hydroelectric installation is, therefore, not a viable option at this site.

Wind Power

Converting wind energy into electricity typically requires 17 acres of land for each MW of electricity produced. A wind turbine physically occupies approximately 0.4 acres, and each turbine on a wind farm is spaced 3 to 10 rotor diameters apart in order to avoid inter-turbine

wake effects. The 37-acre CPV Sentinel site would allow for only 2 MW of wind power capacity. In addition, the site would not meet the guidelines for wind project setbacks from existing projects. Safety setbacks from the northwest corner of the Devers substation and the CAISO power lines to the south preclude turbine installation. Furthermore, given its intermittent nature, wind energy cannot replicate the nature of the power that will be generated by CPV Sentinel. In fact, one of the advantages of CPV Sentinel is that it complements the wind energy that is generated on adjacent parcels by generating power when the wind turbines cannot. Accordingly, wind power is not a viable option for replacing the power to be generated by CPV Sentinel at this site.

Wave Power

Wave power converts the energy in ocean surface waves into electricity. The proposed CPV Sentinel site is not located on or adjacent to the Pacific Ocean and, therefore, wave power is not a viable option for replacing the power to be generated by CPV Sentinel at this site.

Solar Energy

Solar power plants generate electricity by harnessing the energy in sunlight using either photovoltaic systems, which convert sunlight directly into energy, or solar thermal systems, which concentrate sunlight into beams to heat a working fluid that transfers heat to a power generation system. Solar power, like wind power, requires a significant amount of land per MW produced. Even if using the least land-intensive solar power technology available (approximately 5 acres per MW), the site could accommodate only a 7 MW solar project. Furthermore, as discussed above with respect to wind energy, solar energy is intermittent, and cannot replicate the nature of the power that will be generated by CPV Sentinel. Solar energy, therefore, is not a viable option for replacing the power to be generated by CPV Sentinel at this site.

Geothermal Energy

Geothermal power is created by using the energy stored as heat beneath the earth's surface to generate power. Since there are no geothermal steams or hot water reservoirs located at the CPV Sentinel site, geothermal energy is not a viable option for replacing the power to be generated by CPV Sentinel at this site.

Fossil Fuel-Based Energy

CPV is not aware of any source of fossil fuel-generated electric power technology that produces emissions less than those from a fuel cell.

Thus, the renewable/alternative energy solutions discussed above are not viable options to replace either the quantity or the type of electricity to be generated by CPV Sentinel. If you have any questions or concerns, please do not hesitate to contact me.

Sincerely,

Michael J. Carroll
of LATHAM & WATKINS LLP

cc: Mark Turner, CPV