5.5 WATER RESOURCES

This section evaluates the effects of the SJS 1&2 site on water resources in the vicinity of the Project site. The Project will use effluent from the future City of Coalinga Wastewater Treatment Facility and/or groundwater for water supply needs. Wastewater will be recycled to the extent possible with remaining wastewater disposed of via on-site evaporation ponds. This section also identifies mitigation measures that would reduce potential significant impacts (if any) to a level of insignificance.

5.5.1 Affected Environment

5.5.1.1 Site Location

The Project site is located in the unincorporated area of southwestern Fresno County, along West Jayne Avenue approximately 6 miles east of the City of Coalinga and 3 miles west of Interstate 5, as shown on Figure 1.1-1.

The site elevation ranges from approximately 570 feet above mean sea level (msl) in the southwestern corner to 620 feet above msl in the northeastern corner. The Project encompasses 640 acres located on alluvial fan deposits at the transition from the California Coast Ranges to the San Joaquin Valley. The site ground surface is generally level, with a gentle slope from northeast to the southwest. Figures 1.1-4 and 3.3-1 show the general Project site topography.

5.5.1.2 Physiographic Setting

The Project site is located in western San Joaquin Valley, which is part of the Central Valley. The Central Valley comprises about 20,000 square miles and extends from near Red Bluff on the north to near Bakersfield on the south, a distance of about 400 miles.

5.5.1.3 Climate

The Central Valley climate in the Project site vicinity can be characterized as semi-arid. The valley experiences long, hot, dry summers and relatively mild winters. Monthly average, maximum, and minimum temperature data based on a 30-year record for the Coalinga weather station (No. 041864), located approximately 8 miles west of the Project site, are presented in Table 5.5-1. Based on 30 years of record, the average annual temperature for Coalinga is 63.5°F.

Table 5.5-1
Monthly Temperature Data (^{o}F) For Coalinga, California

	Jan	Feb	Mar	Apr	May	Jun	Jul	Aug	Sep	Oct	Nov	Dec
Max	57.2	64.0	69.1	76.1	85.5	93.4	98.8	97.2	91.6	81.7	67.1	57.7
Mean	46.4	51.4	55.2	60.6	68.5	76.1	81.7	80.2	74.7	65.5	54.0	46.6
Min	35.2	39.0	41.4	45.1	51.8	58.8	64.4	63.1	57.6	49.3	40.6	35.1

Source: www.worldclimate.com; Climate Data for 36°N 120°W

Area precipitation is characterized by long dry summers and intermittent wet periods. The Coalinga weather station (No. 041864) also has a 30-year precipitation record. Based on this record, the average annual precipitation is 7.5 inches (see Table 5.5-2).

Table 5.5-2
Coalinga Average Precipitation (Inches)

Jan	Feb	Mar	Apr	May	Jun	Jul	Aug	Sept	Oct	Nov	Dec
1.4	1.4	1.2	0.6	0.2	0.0	0.0	0.0	0.2	0.3	0.8	1.2

Source: www.worldclimate.com; Climate Data for 36°N 120°W

5.5.1.4 Demographics and Land Use

The Project site is currently utilized as active farm land. A PG&E substation is located approximately 6 miles to the east. The nearest community is the City of Coalinga, located approximately 6 miles west of the site.

5.5.1.5 Geology

The San Joaquin Valley is an asymmetrical basin defined by the California Coast Ranges to the west, the Tehachapi Mountains to the south, the Sierra Nevada to the east, and the Delta of the San Joaquin and Sacramento rivers to the north. The axis of the valley trough is closer to the California Coast Ranges than to the Sierra Nevada. The oldest area rocks are basement complex rocks underlying the basin that form much of the Tehachapi Mountains, San Emigdio Mountains, and the southern Sierra Nevada. The basement rocks are composed of a mass of plutonic and metamorphic rocks commonly referred to as the Sierra Nevada batholith of pre-Tertiary age. The basin is filled with more than 14,000 feet of rocks of Jurassic, Cretaceous, Tertiary, and Quaternary ages. A more detailed discussion of regional and site geology is presented in Section 5.3

The Project site ground surface slopes from the northeast to the southwest, from an approximate high point elevation of 620 feet above msl to the site's southern side with an elevation at 570 feet above msl (based upon the Project site map provided by the Aerial Photomapping Services, dated June 2008). The site generally drains as sheet flow in a southerly direction and is tributary. There are no USGS identified "blueline" creeks or washes running through the site.

5.5.1.6 Hydrogeology

The San Joaquin Valley hydrogeology is described in California Groundwater Bulletin 118 (DWR 2006) and the Annual Deep Groundwater Conditions Report issued by the Westlands Water District (Westlands 2006). Figure 5.5-1 shows the groundwater subbasins in the vicinty of the Project.

The San Joaquin Valley represents the southern portion of the Great Central Valley of California. The San Joaquin Valley is a structural trough up to 200 miles long and 70 miles wide, filled with up to 32,000 feet of marine and continental sediments deposited during periodic inundation by the Pacific Ocean and by erosion of the surrounding mountains, respectively. Continental deposits shed from the surrounding

mountains form an alluvial wedge that thickens from the valley margins toward the axis of the structural trough. This depositional axis is below to slightly west of the series of rivers, lakes, sloughs, and marshes that mark the current and historical axis of surface drainage in the San Joaquin Valley.

Groundwater Subbasins

The Project site is located in the Pleasant Valley subbasin (DWR Basin Number 5-22.10) of the San Joaquin Valley Groundwater Basin. The Pleasant Valley subbasin lies along the west side of the San Joaquin Valley and north of the Kings-Kern County line. It straddles the Fresno-Kings County Line. The subbasin is surrounded throughout most of its perimeter by Tertiary continental and marine sediments of the Coast Ranges and west flank of the Kettleman Hills. The subbasin includes the older and younger alluvium of the San Joaquin Valley. The eastern boundary of the subbasin abuts the Westside and Tulare Lake subbasins. The southern boundary abuts the Kern County subbasin. These subbasin boundaries have been derived from both hydrologic and political criteria. Several small, ephemeral streams enter the basin from the surrounding mountains; these streams include Los Gatos, Warthan, Jacalitos, Avenal, and Zapato Chino Creeks.

Pleasant Valley subbasin is approximately 146,000 acres while Westside subbasin (DWR Basin Number 5-22.09) is 640,000 acres. There are many shared hydrogeology characteristics between these two subbasins due to the political nature of the boundary between them. Detailed information for Pleasant Valley and Westside follows.

Aquifer Characteristics

Geologic units comprising the Pleasant Valley subbasin include Holocene alluvium, the Plio-Pleistocene Tulare Formation, and possibly the upper part of the San Joaquin Formation. Specific yield is estimated to be 8.4 percent for the subbasin from DWR, San Joaquin District internal data. Other specific yield estimates reported by DWR are on the order of 10 percent.

The aquifer system comprising the Westside subbasin consists of unconsolidated continental deposits of Tertiary and Quaternary age. These deposits form an unconfined to semi-confined upper aquifer and a confined lower aquifer. These aquifers are separated by an aquitard named Corcoran Clay (E-Clay), a member of the Tulare Formation. These water-bearing zones are recharged by subsurface inflow from the west, east and northeast and by percolation of precipitation and irrigation water.

The unconfined to semi-confined aquifer (upper zone) above the Corcoran Clay includes younger alluvium, older alluvium, and part of the Tulare Formation. These deposits consist of highly lenticular, poorly sorted clay, silt, and sand incercalated with occasional beds of well-sorted sand.

Groundwater Occurrence and Flow

Development of irrigated agriculture in the western San Joaquin Valley, including the Panoche Fan area, has significantly altered the groundwater flow system. Percolation of irrigation water past crop roots has caused a rise in the altitude of the water table in midfan and distal fan areas. Groundwater pumping from wells has lowered the potentiometric surface of the confined zone over much of the western valley. Percolation of irrigation water has replaced infiltration of intermittent streamflow as the primary recharge

mechanism. Groundwater pumping from wells and crop evapotranspiration have replaced natural evapotranspiration and seepage to streams in the valley trough as the primary discharge mechanisms. The combination of percolation and pumpage has resulted in development of a large downward hydraulic-head gradient in the semiconfined zone and has created a groundwater divide. Decreases in groundwater pumping following delivery of surface water have allowed consequent recovery in hydraulic head throughout the groundwater flow system. The present-day groundwater flow system is in a transient state and is adjusting to the stresses placed upon it in both the past and present.

Basin Water Balance

The groundwater budget presented in the text below is based on data collected as part of DWR's Bulletin 160 preparation. The basis for calculations include a 1990 normalized year and land and water use data, with subsequent analysis by a DWR water budget spreadsheet to estimate overall applied water demands, agricultural groundwater pumpage, urban pumping demand and other extraction data. No data for subsurface inflow or outflow exists. Applied water recharge is estimated at 4,000 AFY, there is no known artificial recharge, and natural recharge has not been determined. Estimated extractions include urban pumping at 5,700 AFY, agricultural pumping at 90,000 AFY, and oil industry related extractions 8,830 AFY. Table 5.5-3 shows the well characteristics for the Pleasant Valley subbasin.

Table 5.5-3
Pleasant Valley Subbasin Well Characteristics

Well yields (gallons per minute)		
Municipal/Irrigation	Range: 35-3,300 (DWR unpublished data)	
Total Depths (ft)		
Domestic	Range: Not Determined	Average: Not Determined
Municipal/Irrigation	Range: 300-1,760	Average: 1,000 (DWR unpublished data and Pleasant Valley Water District)

Source: San Joaquin Valley Groundwater Basin, Pleasant Valley subbasin California's Groundwater Bulletin 118

The Westlands Water District has determined that the perennial groundwater yield in the Westside subbasin is 200,000 acre-feet.

Groundwater in Storage

DWR reports indicate calculated rates of water level decline between the mid-1960s and early 1980s in Pleasant Valley Water District as 4.8 feet per year. Additional information provided by DWR indicates the annual decline for the previous four decades at approximately 4 feet per year. The slower decline was attributed to recent reductions in groundwater pumping. In the past decade, water levels have generally continued their long historical decline; hydrographs on file with DWR indicate water level changes of -5 to -25 feet. Localized areas, however, have shown some rebound between 1995 and 2001.

According to the Bulletin 118 update, the total subbasin storage capacity is estimated to be 14,100,000 acre-feet. This assumes an average thickness of 1,150 feet (base of fresh water), a specific yield of 8.4 percent, and an area of 146,000 acres. Other studies referenced in the DWR documents estimated the

volume of water in storage to a maximum depth of 1,000 feet and a groundwater elevation in 1961 with a specific yield of 9.9 percent to be 4,000,000 acre-feet.

Storage capacity of the upper semi-confined aquifer in the Westside subbasin is approximately 36,500,000 acre-feet. This estimate is based on an average thickness of 675 feet from the ground surface to the top of the Corcoran Clay, an area of 600,000 acres, and a specific yield of 9 percent (DWR 2006). Specific yield is the ratio of the volume of water a rock or soil will yield by gravity drainage.

Storage capacity of the lower confined aquifer in the Westside subbasin is approximately 65,000,000 acre-feet. This estimate is based on an average thickness of 1,200 feet from the base of the Corcoran Clay to the base of fresh groundwater, an area of 600,000 acres, and a specific yield of 9 percent (DWR 2006).

Groundwater in storage in the Westside subbasin was estimated by the USGS to be about 52,000,000 acre-feet at a depth of less than or equal to 1,000 feet in 1961. The available storage in the subbasin is estimated to be 6,000,000 acre-feet. This estimate is based on an average depth to groundwater in October 1984 of 111 feet, an area of 600,000 acres, and a specific yield of 9 percent (DWR 2006).

Groundwater Quality

Estimates of total dissolved solids (TDS) of groundwater in Pleasant Valley Water District (WD) reported in DWR documents ranged from 1,000 to 3,000 milligrams per liter (mg/L) with an average of 1,500 mg/L. The constituents in groundwater include calcium, magnesium, sodium, bicarbonates, chlorides, sulfates, and boron. The high TDS concentrations limit the usability of groundwater in the subbasin for many purposes. Groundwater is used for irrigation purposes in certain specific applications, i.e. for crops that are not sensitive to elevated TDS concentrations.

The upper aquifer is generally high in calcium and magnesium sulfate. Groundwater below 300 feet and above the Corcoran Clay shows a tendency of decreased dissolved solids with increased depth. Most of the groundwater of the lower aquifer is of the sodium sulfate type. The difference in quality between the upper and lower aquifers is that the confined zone contains less dissolved solids. Groundwater in the Westside subbasin can have an upper range of dissolved solids concentrations between 2,000 and 3,000 milligrams per liter (mg/L). Dissolved solids concentrations in shallow groundwater can be greater than 10,000 mg/L at some locations.

Groundwater samples were collected from the on-site well on May 14, 2008. The groundwater quality data presented in Table 5.5-4 and Table 5.5-5 are from the existing onsite well. This well currently supports agriculture and is located in the southwestern corner of the Project site and is approximately 980 feet deep. Well yield is approximately 1,400 gpm. Portions of the property have recently been used for agricultural activities including pistachio orchards. Currently, the majority of the property land is fallow and supports sparse growth of annual, ruderal weeds and grasses.

Table 5.5-4
Groundwater Quality from Onsite Well, Inorganics

Constituent or Parameter	Units	Value as of 5/14/2008
Total Alkalinity as $CaCO_3$	mg/L [a]	80.1
Bicarbonate as $CaCO_3$	mg/L	80.1
Carbonate as $CaCO_3$	mg/L	< 2.0
Hydroxide as $CaCO_3$	mg/L	< 2.0
Ammonia as N	mg/L	< 0.5
Biochemical Oxygen Demand	mg/L	< 5.0
Chloride	mg/L	161
Chemical Oxygen Demand	mg/L	< 5.0
Cyanide	µg/L [b]	< 10.0
Specific Conductance (EC)	µmhos/cm [c]	2,880
Fluoride	mg/L	0.17
Hardness	mg/L	1,070
Silica (SiO2)	mg/L	40.9
Nitrate as (NO_3)	mg/L	4.2
Phosphate	mg/L	< 0.6
pH	pH units	7.7
Eh / Oxidation Reduction Potential	mV [d]	192
Sulfate (SO_4)	mg/L	1,200
Sulfide	mg/L	3.3
Total Dissolved Solids	mg/L	2,250
Total Organic Carbon	mg/L	< 0.5
Total Suspended Solids	mg/L	< 10
Turbidity	NTU [e]	1.6
Gross Alpha	pCi/L [f]	6.22 ± 4.45
Gross Beta	pCi/L	1.26 ± 2.72
Alpha Radium (226)	pCi/L	0.000 ± 0.175
Uranium	pCi/L	3.98 ± 0.884

Table 5.5-5
Groundwater Quality From Onsite Well, Metals

Constituent	Units	Value as of 5/14/2008
Aluminum	µg/L [a]	< 50.0
Antimony	µg/L	< 2.0
Arsenic	µg/L	3.1
Barium	µg/L	14.5
Beryllium	µg/L	< 1.0
Boron	µg/L	706
Cadmium	µg/L	< 0.25
Calcium	µg/L	237,000
Chromium	µg/L	< 0.5
Copper	µg/L	< 2.5
Iron	µg/L	< 25.0
Iron (dissolved)	µg/L	33.0
Lead	µg/L	< 1.5
Magnesium	µg/L	161,000
Manganese	µg/L	< 1.0
Manganese (dissolved)	µg/L	< 1.0
Mercury	µg/L	0.59
Molybdenum	µg/L	1.8
Nickel	µg/L	< 1.0
Potassium	µg/L	5,920
Selenium	µg/L	< 2.0
Silver	µg/L	1.2
Sodium	µg/L	285,000
Strontium	µg/L	2,290
Thallium	µg/L	< 2.0
Tin	µg/L	8.2
Titanium	µg/L	< 2.0
Vanadium	µg/L	6.8
Zinc	µg/L	< 25.0

Notes:
a. µg/L = micrograms per liter
b. µmhos/cm = micromhos per centimeter
c. mg/L = milligrams per liter
d. mV = millivolts
e. NTU = nephelometric turbidity units
f. pCi/L = picoCuries per liter

5.5.1.7 Water Supply History and Future Projections

Water Supply History

Early farmers in the Westlands and Pleasant Valley subbasins made use of groundwater for irrigation. In 1968, the delivery of surface water with low levels of dissolved solids from the San Luis Unit of the federal Central Valley Project (CVP) largely replaced the use of groundwater containing elevated levels of dissolved solids for irrigation. However, in response to drought conditions and other surface water shortfalls beginning in 1988, farmers reactivated old wells and constructed new wells to pump groundwater to irrigate their crops.

Future Water Supply

In any given year, the availability of surface water supplies imported from the Sacramento Delta is a function of the amount of precipitation received in northern California, quantities of water carried over from prior years in reservoirs, and the imposition of regulatory operational constraints in the Delta. The amount of groundwater pumping is generally inversely proportional to the availability of surface water supplies.

5.5.1.8 Effects of Previous Groundwater Pumping on Groundwater Basin

From 1987 though 1994, California and much of the western United States experienced the second worst drought of the 20th century. Prior to this period following construction of its distribution system in the mid 1960s, Westlands Water District received full water service contract entitlements (1,150,000 acre-feet) in all but two years (1976 and 1977), and usually received additional (interim) water supplies that would, in the future, be delivered to other CVP contractors once their delivery facilities were constructed.

During the 1987-1994 drought, Westlands Water District received an average supply of 61 percent of contract entitlement and during 1991 and 1992, allocations of only 25 percent were received. It was during this period that the conveyance facilities were completed to the San Felipe Unit, the final element within the CVP Delta export service area, thereby making Interim water no longer available to Westlands Water District and others.

Beginning in 1992, a series of state and federal regulatory actions were initiated that have had a significant long-term effect on agricultural water supplies for both state and federal water service contractors relying on Delta export water supplies. These regulatory actions include the listing of five fish species under the Endangered Species Act (ESA), increased Delta outflow standards under the federal Clean Water Act (CWA) and establishment of more stringent water quality standards by the State Water Resources Control Board. In other actions, the CVP was required to provide approximately 400,000 acre-feet per year (AFY) to wildlife refuges and up to an additional 800,000 AFY for fisheries restoration. One of the most significant resulting operational changes was a reduction in Delta export pumping for a minimum of 30 days in the spring for protection of out-migrant San Joaquin River salmon smolts and Delta smelt.

Year-to-year surface water allocations and groundwater pumpage varied significantly between 1976 and 2006. During this period, groundwater pumpage ranged from a low of 15,000 acre-feet, to a maximum of 600,000 acre-feet in 1991 and 1992. Groundwater levels show maximum annual variations of up to -97 feet per year (ft/yr) (declining) to positive (increasing) levels of up to 89 ft/yr.

5.5.1.9 Effects of Future Use on Groundwater Basin by Others

Groundwater recharge is primarily from seepage from the various streams that cross the subbasin. The cities of Coalinga, in the northern portion of the subbasin, and Avenal, near the longitudinal midpoint, import water for municipal purposes. The state prisons near Coalinga and Avenal also use imported water. Additional recharge may occur as a consequence of this water use.

5.5.1.10 Flooding Hazards

The Project is not located within a Federal Emergency Management Agency (FEMA) designated floodplain. The Project is within FEMA's Flood Insurance Rate Map (FIRM) Community Panel Numbers 06019C3275F, effective date July 19, 2001 and 06019C3405F, effective date July 19, 2001. The FIRMs illustrate that the Project site is entirely within Zone X, defined as areas determined to be outside the 500-year floodplain. See Figure 5.5-3 for the FEMA floodplain delineations. The Project surface water drainage is tributary to Zapato Chino Creek as shown on USGS topographic maps of the area.

5.5.1.11 Wastewater Streams

There are no known sources of wastewater streams on the site or adjacent to the site that would drain through the site.

5.5.2 Environmental Consequences

5.5.2.1 Water Supply

Potential water supply sources evaluated for the Project include recycled water, surface water, groundwater, and water obtained from a service provider. Neither surface water nor water obtained from service provider sources are viable options. The City of Coalinga would be the nearest water service provider, but the Project is not a priority for receiving potable water. The nearest surface water is Zapato Chino Creek, a small, ephemeral stream that has no consistent water supply. The currently planned Project water supply source is a combination of treated effluent from the future City of Coalinga wastewater treatment facility (WWTF) and groundwater. The City of Coalinga's wastewater treatment effluent will be the Project's main water supply, and groundwater from the existing onsite well will be used to augment the treated effluent supply during periods of peak use, and until such time as the treated effluent becomes available for use.

Wastewater Treatment Facility Supply

The future City of Coalinga WWTF is would be constructed east of the City, on 477 acres located at the intersection of West Jayne Avenue and Alpine Avenue (Highway 33) and is currently designed as a secondary treatment facility, with the capability for a future upgrade to tertiary treatment for water reuse

and reclamation. The advanced treated water consists of water that is treated to a minimum secondary level and then coagulated and filtered. A copy of the executed Letter of Intent for the WWTF effluent is contained in Appendix E and indicates that the City will supply up to 1,000,000 gallons per day of recycled water. The City expects its production and delivery of recycled water to the Project to increase from 1,000,000 gallons per day to 1,800,000 gallons per day as the City's wastewater processing needs expand over time. The recylced water will be supplied to the Project on an uninterrupted basis except in extraordinary circumstances. The WWTF effluent is expected to be available by June 2011. Offsite improvements required for use of the WWTF effluent consists of piping from the WWTF to the Project. Onsite piping will also be required to distribute the treated effluent to the Project water treatment facility.

The following discussion provides background on the existing City WWTF, located on the east side of the city at the confluence of Los Gatos Creek and Warthan Creek, as taken from the City of Coalinga Wastewater Treatment Plant Draft EIR, 2005. The existing WWTF is operated under Central Valley RWQCB Waste Discharge Requirements (WDR) Order No. 94-184. Effluent from the existing WWTF is currently pumped year round for agricultural irrigation on 448 acres of farmland owned by HCM Farm. Excess effluent, during the winter months, is disposed of on 30 acres of City-owned property where effluent can be applied at higher than agronomic rates. This plan was proposed in the Title 22 Engineering Report for the existing WWTF, as an interim plan expected to be in operation for not less than 2 years or more than 7 years, until construction of the new WWTP. With closure of the existing WWTP, effluent for irrigation will no longer be available to these properties. Current City of Coalinga WWTF data from 2007 is included in Appendix E. While a full analysis of the treated water is unavailable at this time, the TDS of the treated water is expected to be between 400 and 500 mg/L, depending on the influent received by the WWTF.

Title 22, CCR Division 4, Chapter 3 requires maximum use of recycled water in the satisfaction of requirements for beneficial uses of water. The Project plans to use recycled wastewater as a major water supply source. The Project plans to obtain a major portion of its water needs from recycled water, but will still require the use of groundwater to meet the total Project water needs. The City has current and future obligations to recycle water for industrial, irrigation and/or dual plumbing purposes. Use of the WWTF effluent for the Project would reduce potential groundwater infiltration in the City of Coalinga in the vicinity of the existing WWTF due to the proposed industrial use of the water in lieu of the current irrigation uses. However, the current WWTF effluent disposal practices were listed as temporary practices until such time as the new WWTF is constructed. Currently, it is not anticipated that this change in use/application of the treated effluent will significantly affect current groundwater usage in the City, because the City relies on CVP water for domestic supply.

Groundwater

Use of the onsite well will not require any offsite improvements to provide water to the site. Onsite improvements will include piping to connect the well to the solar sites. Note that the existing well may require upgrades prior to use for the Project water supply purposes. It is anticipated that the existing well pump will be replaced by an electrically operated pump.

The specifics on the existing onsite agricultural well are as follows:

- Approximate depth: 980 feet
- Approximate depth to groundwater: 250 feet
- Estimated yield: 1,400 gpm
- Use: agricultural irrigation

There are a number of active and inactive groundwater wells in the vicinity of the Project. Copies of the well logs on file at the local DWR office for Sections 4, 9, and 10 of Township 21S/Range 16E are included in Appendix E. Note that there are no logs listed on file for Section 3. The well locations are plotted on Figure 5.5-4. The existing onsite agricultural well is listed as well completion report no. EO-38695.

5.5.2.2 Water Use

Water will be required for the following:

- Make-up to the steam turbine system;
- Make-up to the cooling towers;
- Washing of solar collectors;
- Biomass process scrubbers;
- Potable water;
- Service water; and
- Fire protection.

The amount of process water used by the proposed Project is expected to be reasonably uniform. The expected average daily water consumption for the two Plants is approximately 1,915,200 gallons, or 2,057 AFY. The expected peak water consumption for the facility is approximately 1,750 gpm. Total peak daily use is about 2.52 million gallons per day (MGD). Average annual raw water consumption is estimated to be 2,036 AFY. Figure 5.5-3, Water Balance Diagram, shows the water mass balance diagram and a water supply schematic. Table 5.5-6 provides the Operation Water Usage Rates.

Table 5.5-6
Water Usage Rates[1]

Water Use	Average Annual (gpm)[2]	Average Daily (gpm)[3]	Maximum Daily (gpm)[4]
EQUIPMENT MAKEUP WATER REQUIREMENTS			
Steam Cycle Makeup	20	21	26
Mirror Wash Water (60,000 gallons each month)	4	4	4
Biomass Facilities	174	174	232
Cooling Tower Makeup	1,115	1,163	1,482
City Water Treatment Makeup	60	80	100
Potable Water[5]	70	80	120
Total Equipment Makeup Requirements	**1,443**	**1,522**	**1,964**

Table 5.5-6
Water Usage Rates[1]
(Continued)

Water Use	Average Annual (gpm)[2]	Average Daily (gpm)[3]	Maximum Daily (gpm)[4]
Recovered Water			
Condenser Blowdown, Boiler Continuous and Intermittent Blowdown	146	152	154
Estimated One-Half of Potable Water Use	35	40	60
Total Recovered Water	**181**	**192**	**214**
NET RAW WATER REQUIREMENT	**1,262**	**1,330**	**1,750**

Notes:
1. Values listed are for the combined water use of SJS 1&2.
2 "Average Annual" (gpm) is based on the amount of Mwh produced in one year.
3. "Average Daily" (gpm) is the combined Annual Average times the ratio of total hours in year versus the total hours of operation in one year. (Assumes 8,400hrs/year of operation and 8,760 total hours in year.)
4. "Maximum Daily" is the worst case daily condition when either Solar or Biomass plants are operating in an upset condition.
5. Potable water includes water used for drinking, sanitation, safety showers and laboratory.

Note: Power Plant Factors do not apply to Mirror Wash, or Potable Water use.

The estimated average daily water requirement for the Project operation is 1,330 gpm. The WWTF will supply approximately half of the average daily requirements. During average daily operation, the WWTF recycled water will supply up to 650 to 700 gpm (approximately 1,000,000 gallons per day), and the groundwater well would be required to supply 630 to 680 gpm. To meet the estimated maximum daily usage rates additional groundwater usage would be required on a temporary basis. Note that the Project water requirements will be less during the summer months due to the hybrid nature of the Project. It is anticipated the available amount of recycled water from the WWTF could increase to 1,800,000 gallons per day. Under this scenario, the recycled water would supply up to 1,250 gpm, and groundwater usage would be approximately 80 gpm.

It is anticipated that all or portions of the construction phase (1st quarter of 2010 to 1st quarter of 2011) will occur prior to the WWTF recycled water becoming available for use (June 2011). Therefore, the existing onsite groundwater well will be the main supply source during construction for water uses such as grading, dust control, concrete mixing, etc.

Solely based upon comparison of the location of the Project in relation to the neighboring wells, along with the anticipated long term decline in the Project reliance on groundwater, it is not currently anticipated that the Project groundwater usage will adversely impact groundwater levels or quality in the surrounding area.

Water Treatment Process

Two 100-percent forwarding pumps located in the water treatment areas will pump the water from a 2,000,000-gallon combination raw water/firewater storage tank to the water treatment system. All water for the Project will be treated as required on-site. Blowdown from the steam drums will be returned to the raw water storage tank to reduce raw water requirements. Site groundwater is characterized as raw water, and will require treatment to remove dissolved solids for mirror wash water applications, and additional treatment to meet standard drinking water quality requirements. The water will require demineralization to prevent mineral deposits forming on the mirrors. Processes available for demineralization are RO and ion exchange. The Project will use an RO treatment unit.

Solar mirror wash water, feedwater makeup, and potable water will require on-site treatment and purification. A combination water treatment system with anti-scalant, RO, demineralization, and sanitizing equipment will be provided for each water source (City wastewater and groundwater). The design capacity of the system to treat the City wastewater will be approximately 1,000 gpm of treated water. The design capacity of the system to treat the groundwater will be approximately 1,750 gpm of treated water to support both solar Plants during the rare times when the City wastewater treatment facility is not operating. Water quality from both treatment systems will be controlled by continuous analysis of the conductivity and periodic analysis of silica content.

Incoming water from the raw water storage tank will be treated with sand filters, anti-scalant injection, and reverse osmosis unit. Water from the RO unit will be used for dust control and potable water.

Boiler feedwater must meet stringent specifications for suspended and dissolved solids. For this application, water from the sand filters will be further treated by RO followed by a mixed bed demineralizer/polisher. This purified water will also be used for mirror washing, which will be distributed by special wash trucks designed with apparatus to periodically clean the mirrors (typically every two weeks).

Additional conditioning of the condensate and feedwater circulating in the steam system will be provided by means of a corrosion inhibitor /oxygen scavenger. The system will consist of a 280-gallon chemical tote and a small positive-displacement metering pump. This system will require two additional totes to be stored on site during normal operation. The corrosion inhibitor/oxygen scavenger will be injected at either the de-aerator or the boiler feed pump suction, and will be controlled by an automated online pH monitor. Potable water for plant personnel use will be supplied from potable water storage tank followed by a potable water skid, which will include sanitizing equipment and pumps for distribution and pressurization.

5.5.2.3 Wastewater Disposal

The Project is designed as a “zero discharge” facility. All non-recycled wastewater streams, including the RO reject water will be contained onsite through the use of a lined evaporation pond(s). The evaporation pond will be sized to accommodate the wastewater amounts and will be designed in accordance with applicable state, regional, and local regulatory requirements. An onsite contained septic system will be used for sewage.

There will be several process wastewater sources:

- Steam system blowdown
- Solar mirror washdown
- Cooling tower blowdown
- RO system reject
- Oil/water separator (OWS) clear well discharge

Process wastewater will be recovered from the steam system blowdown and cooling tower blowdown and recycled back to the water treatment system. The wastewater streams are summarized in Table 5.5-7.

Table 5.5-7
Summary of Wastewater Streams and Estimated Quality

Stream Description	Disposition
Steam System Blowdown	Water Treatment System
Oil/Water Separator Water Discharge (plant drains)	Wastewater Holding Tank/Water Treatment System
Solar Thermal Washdown	Evaporated
Cooling Tower Blowdown	Water Treatment System
RO System Reject	Water Treatment System
Sanitary Wastewater	Leach Field

Stormwater

Site grades will be established to minimize the amount of earthwork required to construct the facilities and to maintain control of stormwater runoff. All areas disturbed during construction will be graded to a smooth surface. Selected areas will be covered with appropriate material, as conditions require (*e.g.,* asphalt concrete for road base and gravel for other facility area surfaces). Finish grading will be performed to conform to the finished design elevations for surface drainage and to prepare the areas for the specified surface finishes. Rainfall from vehicle parking and paved areas in the power block will be collected and directed to an oil/water separator prior to discharge to the raw water tank for recovery.

Rainfall from each plant's solar field will continue to be drained by sheet flow. Drainage and erosion will be controlled through infiltration basins to allow the rainfall to be absorbed into the ground replenishing local ground water levels and designed to match existing runoff rates to offsite areas. The current estimate of average annual site runoff is approximately 120 AF, assuming 7.5 inches of annual rainfall over the 640-acre site and using a runoff coefficient of 0.3. Although the Project would increase runoff coefficients in localized areas onsite (site facilities area), the Project drainage design, along with the proposed inifiltration areas in the solar field will allow percolation and evaporation to match the current runoff rates to downstream offsite areas.

The solar field is designed with a slight berm on the exterior edges to contain collected rain water in the field for natural infiltration and evaporation. The power island is 1-foot higher than the solar field, so that runoff travels to the solar fields and infiltrates or evaporates. In areas of potential HTF contamination, the runoff will be diverted to the lined evaporation pond(s).

5.5.3 Cumulative Impacts

It is not expected that the Project will cause a significant cumulative impact to groundwater supply or use. Thus, no significant cumulative impacts have been identified as a result of the construction, operation, maintenance, or long-term presence of the Project and other projects in the area. For further discussion of cumulative impacts, see Section 5.18, Cumulative Impacts.

In relation to water resources, mitigation measures for the Project would be applied in situations where the Project has or would have an unmitigated significant impact. As discussed above, the evaluation of water resources impacts considered both the occurrence and the quality of water in the area. Furthermore, after implementation of the proposed Project features described in Section 5.5.2 related to water resources, the Project will not have a significant effect on water quality in the area or surface water runoff flowrates, volumes, or floodplain impacts. Thus, no mitigation is required for water resources.

5.5.4 LORS Compliance

The Project construction and operation will be in accordance with all federal, state, county and local LORS applicable to water resources. Applicable LORS are discussed in this section and are summarized in Table 5.5-8.

5.5.4.1 Federal

5.5.4.1.1 Clean Water Act of 1977 (including 1987 amendments) § 402; 33 USC § 1342; 40 CFR Parts 122 – 136

The CWA requires a National Pollutant Discharge Elimination System (NPDES) permit for any discharge of pollutants from a point source to waters of the United States. This law and its regulations apply to stormwater and other discharges into waters of the United States. CWA requires compliance with a general construction activities permit for the discharge of stormwater from construction sites disturbing one-half acre or more. This federal permit requirement is administered by the State of California Water Resources Control Board (SWRCB).

Construction activities at the Project site will be performed in accordance with a SWPPP and the associated monitoring plan that is required in accordance with the NPDES General Permit for Stormwater Discharges Associated with Construction Activities issued by the SWRCB. The SWPPP will contain control measures including BMPs to reduce erosion and sedimentation, as well as other pollutants associated with vehicle maintenance, material storage and handling, and other activities occurring at the Project site. The administering agencies for the above authority are the SWRCB and the Central Valley RWQCB.

5.5.4.1.2 Clean Water Act § 311; 33 USC § 1342; 40 CFR Parts 122 – 136

This portion of the CWA requires reporting of any prohibited discharge of oil or hazardous substance. The Project will conform by proper management of oils and hazardous materials both during construction and operation. The administering agency is the Central Valley RWQCB and the California Department of Toxic Substances Control (DTSC).

5.5.4.1.3 Code of Federal Regulations (CFR), Title 40, Parts 124, 144 to 147

This portion of the federal code requires protection of underground water resources. The Project will comply with this requirement through the use of a lined evaporation pond for RO discharge water, and other non-recylced wastewater streams.

5.5.4.2 State

5.5.4.2.1 Water Code Section 13552.6

This portion of the California Water Code (CWC) relates to the use of potable domestic water for cooling towers, air conditioning devices, and floor-trap priming. Currently, the Project does not propose to use potable domestic water for cooling towers. The Project proposes to use a combination of recycled WWTF effluent and groundwater requiring treatment prior to use.

5.5.4.2.2 State Water Resources Control Board, Resolution 75-58 (June 18, 1975)

SWRCB prescribes state water policy on the use and disposal of inland water used for power plant cooling.

5.5.4.2.3 California Porter-Cologne Water Quality Control Act 1998; California Water Code § 13000 – 14957; Division 7, Water Quality

The Porter-Cologne Water Quality Control Act (Act) authorizes the state to develop and implement a statewide program for the control of the quality of all waters of the state. The Act establishes the SWRCB and the nine RWQCBs as the principal state agencies with primary responsibility for the coordination and control of water quality. Under § 13172, siting, operation, and closure of waste disposal sites are regulated. SWRCB requires classification of the waste and the disposal site. Discharges of waste must comply with the groundwater protection and monitoring requirements of the Resource Conservation and Recovery Act (RCRA) of 1976, as amended (42 USC Sec. 6901 *et seq.),* and any federal acts which amend or supplement RCRA, together with any more stringent requirements necessary to implement this revision or Article 9.5 (commencing with Section 25208) of Chapter 6.5 of Division 20 of the Health and Safety Code. The Project will comply with the regulations set forth in this Act.

The administering agencies for the above authority are the CEC, SWRCB and the Central Valley RWQCB.

5.5.4.2.4 *Title 22, CCR Division 4, Chapter 3*

This regulation requires maximum use of recycled water in the satisfaction of requirements for beneficial uses of water. The Project plans to use recycled wastewater as the main water supply source. The administering agency is the Central Valley RWQCB.

5.5.4.2.5 California Water Code, Section 5002

This requirement relates to the extraction of groundwater and requires that a Notice of Extraction and Diversion of Water be filed with the SWRCB. This requirement applies for extractions greater than 25 AFY. The administering agency is the Central Valley RWQCB.

5.5.4.2.6 California Water Code, Section 13751

This is a requirement for a Report of Well Completion to be filed with the Central Valley RWQCB within 60 days of well completion. Currently, no new wells are proposed for the Project; however, if at any time it is determined the Project requires a well, well completion reports will be filed.

5.5.4.2.7 California Public Resources Code § 25523(a); 20 CCR §§ 1752, 1752.5, 2300 – 2309 and Chapter 2 Subchapter 5 Article 1, Appendix B, Part (1)

The code provides for the inclusion of requirements in the CEC's decision on an AFC to assure protection of environmental quality and requires submission of information to the CEC concerning proposed water resources and water quality protection. The administering agency for the above authority is the CEC.

5.5.4.2.8 California Water Code §§ 13271 – 13272; 23 CCR §§ 2250 – 2260

These code sections require reporting of releases of specified reportable quantities of hazardous substances or sewage (§ 13272), when the release is into, or where it will likely discharge into, waters of the state. For releases into or threatening surface waters, a "hazardous substance" and its reportable quantities are those specified at 40 CFR § 116.5, pursuant to § 311 (b)(2) of the CWA, 33 USC § 1321 (b)(2). For releases into or threatening groundwater, a "hazardous substance" and its reportable quantities are those specified at 40 CFR § 116.5, pursuant to § 31 1(b)(2) of the CWA, 33 USC § 1321(b)(2). For releases into or threatening groundwater, a "hazardous substance" is any material listed as hazardous pursuant to the California Hazardous Waste Control Act, Health & Safety Code §§ 25100 – 2520.24, and the reportable quantities are those specified at 40 CFR Part 302. Although such releases are not anticipated, the Project would comply with the reporting requirements.

The administering agencies for the above authority are the Central Valley RWQCB and the California Office of Emergency Services.

5.5.4.2.9 California Water Code § 13260 – 13269; 23 CCR Chapter 9

The code requires the filing of a report of waste discharge (ROWD) and provides for the issuance of WDRs with respect to the discharge of any waste that can affect the quality of the waters of the state. The WDRs will serve to enforce the relevant water quality protection objectives of the Central Valley Region

Basin Plan and federal technology-based effluent standards applicable to the Project. With respect to potential water pollution from construction activities, the WDRs may incorporate requirements based on the CWA § 402(p) and implementing regulations at 40 CFR Parts 122 *et seq.,* as administered by the Central Valley RWQCB. The administering agency for the above authority is the Central Valley RWQCB.

5.5.4.2.10 California Environmental Quality Act, Public Resources Code § 21000 *et seq.;* California Environmental Quality Act (CEQA) Guidelines, 14 CCR § 15000 *et seq.;* Appendix G

CEQA Guidelines (Appendix G) contain definitions of the Projects that can be considered to cause significant unmitigated impacts to water resources. The Project is not expected to cause significant impacts to water resources, as described in Section 5.5.2. The administering agency of the above authority is the CEC.

5.5.4.2.11 Title 27, CCR Division 2. §20375. SWRCB - Special Requirements for Surface Impoundments. (C15: §2548)

This regulation governs the design requirements for surface impoundments. The evaporation pond(s) for wastewater disposal will be designed and operated in accordance with the requirements of this section.

5.5.4.3 Local

5.5.4.3.1 Fresno County Department of Public Health, Division of Environmental Health, California Well Standards Ordinance and California Well Standards, Bulletins 74-81 and 74-90

The Fresno County Department of Public Health, Division of Environmental Health, Water Surveillance Program regulates the construction of new water wells, the reconstruction, repair or deepening of existing wells and the destruction of abandoned wells in unincorporated Fresno County. The Division of Environmental Health regulates these activities through the provisions of the California Well Standards Ordinance and the construction standards set forth in the California Well Standards, Bulletins 74-8 1 and 74-90. Any water supply well constructed for the Project will be constructed in accordance with this ordinance and these bulletins. The administering agency is the Fresno County Department of Public Health, Division of Environmental Health, Water Surveillance Program.

5.5.4.3.2 Fresno County General Plan, Water Quality Policies OS-A.23 through OS-A.30 and Programs OS-A.A through OS-AD.

The purpose of these policies and programs is to help control potentially significant impacts of development, including non-point sources of water pollution, such as runoff from urban areas, grading, construction, and agricultural activities. The Project compliance with other LORS, such as the CWA, will result in general compliance with this objective.

Table 5.5-8
Summary of LORS

Jurisdiction	LORS	Requirements	Conformance Section	Administering Agency	Agency Contact
Federal					
	CWA § 402; 33 USC § 1342; 40 CFR Parts 110, 112, 116	Requires NPDES Permits for construction and industrial stormwater discharges. Requires preparation of a SWPPP and Monitoring Program.	Coverage under NPDES industrial stormwater permit maybe required. NOI for coverage under NPDES construction stormwater permit will be filed prior to construction.	SWRCB and RWQCB	
	CWA § 311; 33 USC § 1342; 40 CFR Parts 122-136	Requires reporting of any prohibited discharge of oil or hazardous substance.	The Project will conform by proper management of oils and hazardous substances both during construction and operation. If an accidental release or unintended spill occurs it will promptly be reported.	RWQCB and DTSC	
	Code of Federal Regulations (CFR), Title 40, Parts 124, 144 to 147	Requires protection of underground water resources	The Project will utilize lined evaporation ponds for wastewater disposal.	Environmental Protection Agency (EPA)	
State					
	CWC § 13552.6	Use of potable domestic water for cooling towers and air conditioning is unreasonable use if suitable recycled water is available.	The Project proposes to use recycled wastewater as a main water supply source.	SWRCB and RWQCB	
	California Constitution Article 10 § 2	Avoid the waste or unreasonable uses of water. Regulates methods of use and diversion of water.	The Project includes appropriate water conservation measures, both during construction and operation.	SWRCB and RWQCB	

Table 5.5-8
Summary of LORS
(Continued)

Jurisdiction	LORS	Requirements	Conformance Section	Administering Agency	Agency Contact
	State Water Resources Control Board, Resolution No. 75-58	Addresses sources and use of cooling water supplies for power plants which depend on inland waters for cooling and in areas subject to general water shortages.	The Project proposes to use recycled wastewater as a main water supply source.	SWRCB and RWQCB	
	Porter-Cologne Water Quality Act of 1972; CWC § 13000-14957, Division 7, Water Quality	Requires State and Regional Water Quality Control Boards to adopt water quality initiatives to protect state waters. Those criteria include identification of beneficial uses, narrative and numerical water quality standards.	The Project will conform to applicable state water standards, both qualitative and quantitative, prior to and during operation. Applicable permits will be obtained from Regional Water Quality Control Board.	SWRCB and RWQCB	
	Title 22, CCR	Addresses the use of recycled water for cooling equipment	The Project proposes to use recycled wastewater as a main water supply source.	California Department of Health Services	
	The Safe Drinking Water and Toxic Enforcement Act of 1986 (proposition 65), Health and Safety Code 25241.5 et seq.	Prohibits the discharge or release of chemicals known to cause cancer or reproductive toxicity into drinking water sources.	The Project will conform to all state water quality standards, both qualitative and quantitative. The Project will not discharge into any drinking water source. If an unintended spill occurs, reporting of spill will be prompt.	California Department of Health Services	
	CWC Section 461	Encourages the conservation of water resources and the maximum reuse of wastewater, particularly in areas where water is in short supply.	The Project proposes to use recycled wastewater as a main water supply source.	SWRCB and RWQCB	

Table 5.5-8
Summary of LORS
(Continued)

Jurisdiction	LORS	Requirements	Conformance Section	Administering Agency	Agency Contact
	CWC Section 5002	Requires a "Notice of Extraction and Diversion of Water" to be filed with the State Water Resources Control Board on or before March 1st of the succeeding year.	Notice will be filed as required by state law.	SWRCB and RWQCB	
	CWC Section 13751	Requires a "Report of Completion" to be filed with the State Water Resources Control Board within 60 days of well construction.	If a new well is required, the Project will file a report of well completion.	SWRCB and RWQCB	
	California Public Resources Code § 25523(a); 20 CCR §§ 1752, 1752.5, 2300 – 2309, and Chapter 2 Subchapter 5, Article 1, Appendix B, Part (1)	The code provides for the inclusion of requirements in CEC's decision on an AFC to assure protection of environmental quality, and requires submission of information to the CEC concerning proposed water resources and water quality protection.	The Project will comply with CEC requirements to assure protection of water resources.	CEC and RWQCB	
	CWC §§ 13271 – 13272; 23 CCR §§ 2250 – 2260	Reporting of releases of reportable quantities of hazardous substances or sewage and releases of specified quantities of oil or petroleum products.	No releases of hazardous substances are anticipated; however, the The Project will conform to all state water quality standards, both qualitative and quantitative. If an unintended spill occurs, reporting of spill will be prompt.	SWRCB and RWQCB	

Table 5.5-8
Summary of LORS
(Continued)

Jurisdiction	LORS	Requirements	Conformance Section	Administering Agency	Agency Contact
	CWC §13260 – 13269; 23 CCR Chapter 9	Requires the filing of a Report of Waste Discharge (ROWD) and provides for the issuance of WDRs with respect to the discharge of any waste that can affect the quality of the waters of the state.	RWQCB will be contacted regarding the requirements for an ROWD and WDRs	SWRCB and RWQCB	
	CEQA, Public Resources Code § 21000 et seq.; CEQA Guidelines, 14 CCR § 15000 et seq.; Appendix G	CEQA Guidelines (Appendix G) contain definitions of the Projects which can be considered to cause significant impacts to water resources.	The Project will comply with the requirements of the CEC to assure protection of water resources.	CEC	
	Title 27, CCR Division 2. §20375. SWRCB - Special Requirements for Surface Impoundments. (C15: §2548)	This regulation governs the design requirements for surface impoundments.	The evaporation pond for process wastewater disposal will be designed and operated in accordance with the requirements of this section.	SWRCB and RWQCB	

Table 5.5-8
Summary of LORS
(Continued)

Jurisdiction	LORS	Requirements	Conformance Section	Administering Agency	Agency Contact
Local					
	Fresno County Department of Community Health, Environmental Health System, California Well Standards Ordinance and California Well Standards, Bulletins 74-81 and 74-90.	Regulates construction of new water wells, reconstruction, repair or deepening of existing wells and destruction of abandoned wells.	The Project will conform to all Fresno County water well construction standards.		
	Fresno County General Plan Water Quality Policies and Programs.	Non-point sources of water pollution, such as runoff from urban areas, grading, construction, and agricultural activities shall be recognized as potentially significant impacts of development.	The Project will conform to all water quality policies and programs, and will have zero discharge off-site from industrial activities. Grading and erosion control plans will minimize or prevent construction phase impacts.		

Notes:
LORS = laws, ordinances, regulations, and standards

5.5.4.4 Agencies and Agency Contacts

Table 5.5-9
Agency Contact List for LORS

	Agency	Contact	Address	Telephone
1	California Regional Water Quality Control Board, Central Valley Region	TBD	1685 E Street Fresno, CA 93706-6114	559-445-5116
2	California Department of Water Resources - Division of Planning and Local Assistance, San Joaquin Division	Ben Igawa	3374 East Shields Avenue Fresno, CA 93726-6913	559-230-3300
3	Fresno County, Department of Public Works	TBD	2220 Tulare Street, 6th Floor Fresno, CA 93721	559-262-4078
4	Westlands Water District	TBD	PO Box 6056 Fresno, CA 93703-6056	(559) 224-1523

5.5.4.5 Permits Required and Permitting Schedule

Table 5.5-10
Applicable Permits

Responsible Agency	Permit/Approval	Schedule
SWRCB and RWQCB	NPDES Permit – Prepare Industrial SWPPP.	Complete initial Industrial SWPPP and file Notice of Intent with SWRCB 60 days before operation. Submit copy of SWPPP and Notice of Intent to CEC 30 days before operation (or letter from RWQCB exempting the Project from NPDES Industrial Permit requirements).
SWRCB and RWQCB	NPDES Permit – Prepare Construction SWPPP.	Complete initial Construction SWPPP and file Notice of Intent with SWRCB 60 days before operation. Submit copy of SWPPP and Notice of Intent to CEC 30 days before operation.
RWQCB	Report of Waste Discharge (ROWD) and Waste Discharge Requirements (WDRs)	Submit ROWD and apply for WDR coverage with RWQCB during improvement plan preparation process before start of construction.

Notes:
NPDES = National Pollutant Discharge Elimination System
RWQCB = Regional Water Quality Control Board
SWPPP = Storm Water Pollution Prevention Plan
SWRCB = State Water Resources Control Board
WDR = Waste Discharge Requirement

5.5.5 References

California Department of Water Resources. 2003. California's Groundwater Bulletin 118. Last viewed on 13 June 2008 at <http://www.groundwater.water.ca.gov/bulletin118/prev_b118_rpts/index.cfm>.

California Department of Water Resources. 2004. California's Groundwater Bulletin 118, Hydrological Region Fresno, Pleasant Valley Groundwater Basin. Last viewed on 07 May 2008 at <http://www.groundwater.water.ca.gov/bulletin118/prev_b118_rpts/index.cfm>.

California Department of Water Resources. 2004. California's Groundwater Bulletin 118, Hydrological Region Fresno, Westside Groundwater Basin. Last viewed on 13 June 2008 at <http://www.groundwater.water.ca.gov/bulletin118/prev_b118_rpts/index.cfm>.

Coalinga, City of. Coalinga Wastewater Treatment Plant DRAFT Environmental Impact Report, July 2005. Last viewed on September 8, 2008 at: <http://www.morrogroup.com/coalinga/coalinga.htm>

Federal Emergency Management Agency, Flood Insurance Rate Maps for Fresno County, 2001. Community Panel Number 06019C3450F.

This page intentionally left blank

onAdequacy Issue: Adequate ____ Inadequate ____

DATA ADEQUACY WORKSHEET

Revision No. 0 Date ____

Technical Area: **Water Resources** Project: San Joaquin Solar 1&2 Technical Staff: ____

Project Manager: ____ Docket: ____ Technical Senior: ____

SITING REGULATIONS	INFORMATION	AFC PAGE NUMBER AND SECTION NUMBER	ADEQUATE YES OR NO	INFORMATION REQUIRED TO MAKE AFC CONFORM WITH REGULATIONS
Appendix B (g) (1)	...provide a discussion of the existing site conditions, the expected direct, indirect and cumulative impacts due to the construction, operation and maintenance of the project, the measures proposed to mitigate adverse environmental impacts of the project, the effectiveness of the proposed measures, and any monitoring plans proposed to verify the effectiveness of the mitigation.	Section 5.5, page 5.5-1 through 5.5-25		
Appendix B (g) (14) (A)	All the information required to apply for the following permits, if applicable, including:	Section 5.5		
Appendix B (g) (14) (A) (i)	Waste Discharge Requirements; National Pollutant Discharge Elimination System Permit; and/or a Section 401 Certification or Waiver from the appropriate Regional Water Quality Control Board (RWQCB);	Section 5.5.4.5 Page 5.5-24		
Appendix B (g) (14) (A) (ii)	Construction and Industrial Waste Discharge and/or Industrial Pretreatment permits from wastewater treatment agencies;	Section 5.5.4.2 Page 5.5-18		
Appendix B (g) (14) (A) (iii)	Nationwide Permits and/or Section 404 Permits from the U.S. Army Corps of Engineers; and	Section 5.5.4.5 Page 5.5-24		
Appendix B (g) (14) (A) (iv)	Underground Injection Control Permit(s) from the U.S. Environmental Protection Agency, California Division of Oil and Gas, and RWQCB.	Not applicable		
Appendix B (g) (14) (B)	A detailed description of the hydrologic setting of the project. The information shall include a narrative discussion and on maps at a scale of 1:24,000 (or appropriate scale approved by staff), describing the chemical and physical characteristics of the following nearby water bodies that may be affected by the proposed project:	Section 5.5.1.1 Page 5.5-1, Figure 1.1-4		

SITING REGULATIONS	INFORMATION	AFC PAGE NUMBER AND SECTION NUMBER	ADEQUATE YES OR NO	INFORMATION REQUIRED TO MAKE AFC CONFORM WITH REGULATIONS
Appendix B (g) (14) (B) (i)	Ground water bodies and related geologic structures;	Section 5.5.1.6 Pages 5.5-2 though 5.5-7		
Appendix B (g) (14) (B) (ii)	Surface water bodies;	Section 5.5.1.7 Page 5.5-8		
Appendix B (g) (14) (B) (iii)	Water inundation zones, such as the 100-year flood plain and tsunami run-up zones;	Figure 5.5-2		
Appendix B (g) (14) (B) (iv)	Flood control facilities (existing and proposed); and	Section 5.5.1.7 Page 5.5-8		
Appendix B (g) (14) (B) (v)	Groundwater wells within ½ mile if the project will include pumping.	Figure 5.5-4.		
Appendix B (g) (14) (C)	A description of the water to be used and discharged by the project. This information shall include:	Section 5.5.2		
Appendix B (g) (14) (C) (i)	Source(s) of the primary and back-up water supplies and the rationale for their selection;	Section 5.5.2.1 Pages 5.5-9 and 5.5-10		
Appendix B (g) (14) (C) (ii)	The expected physical and chemical characteristics of the source and discharge water(s) including identification of both organic and inorganic constituents before and after any project-related treatment. For source waters with seasonal variation, provide seasonal ranges of the expected physical and chemical characteristics. Provide copies of background material used to create this description (e.g., laboratory analysis);	Tables 5.5-4 and 5.5-5 Pages 5.5-6 and 5.5-7		
Appendix B (g) (14) (C) (iii)	Average and maximum daily and annual water demand and waste water discharge for both the construction and operation phases of the project;	Section 5.5.2.2 Page 5.5-11		

SITING REGULATIONS	INFORMATION	AFC PAGE NUMBER AND SECTION NUMBER	ADEQUATE YES OR NO	INFORMATION REQUIRED TO MAKE AFC CONFORM WITH REGULATIONS
Appendix B (g) (14) (C) (iv)	A detailed description of all facilities to be used in water conveyance (from primary source to the power plant site), water treatment, and wastewater discharge. Include a water mass balance diagram;	Section 5.5.2.2 Page 5.5-11		
Appendix B (g) (14) (C) (v)	For all water supplies intended for industrial uses to be provided from public or private water purveyors, a letter of intent or will-serve letter indicating that the purveyor is willing to serve the project, has adequate supplies available for the life of the project, and any conditions or restrictions under which water will be provided. In the event that a will-serve letter or letter of intent can not be provided, identify the most likely water purveyor and discuss the necessary assurances from the water purveyor to serve the project;	Section 5.5.2.2 Page 5.5-11 Appendix E		
Appendix B (g) (14) (C) (vi)	For all water supplied which necessitates transfers and/or exchanges at any point, identify all parties and contracts/agreements involved, the primary source for the transfer and/or exchange water (e.g., surface water, groundwater), and provide the status of all appropriate agencies' approvals for the proposed use, environmental impact analysis on the specific transfers and/or exchanges required to obtain the proposed supplies, a copy of any agency regulations that govern the use of the water, and an explanation of how the project complies with the agency regulation(s);	Section 5.5.2.2 Page 5.5-11		

SITING REGULATIONS	INFORMATION	AFC PAGE NUMBER AND SECTION NUMBER	ADEQUATE YES OR NO	INFORMATION REQUIRED TO MAKE AFC CONFORM WITH REGULATIONS
Appendix B (g) (14) (C) (vii)	Provide water mass balance and heat balance diagrams for both average and maximum flows that include all process and/or ancillary water supplies and wastewater streams. Highlight any water conservation measures on the diagram and the amount that they reduce water demand; and	Section 5.5.2.2 Page 5.5-11 Figure 5.5-3		
Appendix B (g) (14) (C) (viii)	For all projects which have a discharge, provide a copy of the will-serve letter, permit or contract with the public or private entity that will be accepting the wastewater and contact storm water from the project. The letter, permit or contract, if possible, shall identify the discharge volumes and the chemical or physical characteristics under which the wastewater and contact storm water will be accepted. In the event that a will-serve letter, permit, or contract cannot be provided, identify the most likely wastewater/storm water entity and discuss why the applicant was unable to secure the necessary assurances to serve the project's wastewater/storm water needs. Also, discuss the term of the wastewater service to the project, whether the wastewater entity has adequate permit capacity for the volume of wastewater from the project and has adequate permit levels for the chemical/physical characteristics of the project's wastewater and storm water for the life of the project, and any issues or conditions/restrictions the wastewater entity may impose on the project.	Project will be zero-discharge facility		
Appendix B (g) (14) (D)	Identify all project elements associated with stormwater drainage, including a description of the following:	Section 5.5		

SITING REGULATIONS	INFORMATION	AFC PAGE NUMBER AND SECTION NUMBER	ADEQUATE YES OR NO	INFORMATION REQUIRED TO MAKE AFC CONFORM WITH REGULATIONS
Appendix B (g) (14) (D) (i)	Monthly and/or seasonal precipitation and stormwater runoff and drainage patterns for the proposed site and surrounding area that may be affected by the project's construction and operation;	Section 5.5.1.3 Pages 5.5-1		
Appendix B (g) (14) (D) (ii)	Drainage facilities and the design criteria used for the plant site and ancillary facilities, including but not limited to capacity of designed system, design storm, and estimated runoff;	Section 5.5.2.4 Pages 5.5-15		
Appendix B (g) (14) (D) (iii)	All assumptions and calculations used to calculate runoff and to estimate changes in flow rates between pre- and post construction; and	Section 5.5.2.3 Page 5.5-14		
Appendix B (g) (14) (D) (iv)	A copy of applicable regional and local requirements regulating the drainage systems, and a discussion of how the project's drainage design complies with these requirements.	Appendix E		
Appendix B (g) (14) (E)	An impacts analysis of the proposed project on water resources and a discussion of conformance with water-related LORS and policy. This discussion shall include:	Section 5.5.4 Pages 5.5-16		
Appendix B (g) (14) (E) (i)	The effects of project demand on the water supply and other users of this source, including, but not limited to, water availability for other uses during construction or after the power plant begins operation, consistency of the water use with applicable RWQCB basin plans or other applicable resource management plans, and any changes in the physical or chemical conditions of existing water supplies as a result of water use by the power plant;	Section 5.5.2		

SITING REGULATIONS	INFORMATION	AFC PAGE NUMBER AND SECTION NUMBER	ADEQUATE YES OR NO	INFORMATION REQUIRED TO MAKE AFC CONFORM WITH REGULATIONS
Appendix B (g) (14) (E) (ii)	If the project will pump groundwater, an estimation of aquifer drawdown based on a computer modeling study shall be conducted by a professional geologist and include the estimated drawdown on neighboring wells within 0.5 mile of the proposed well(s), any effects on the migration of groundwater contaminants, and the likelihood of any changes in existing physical or chemical conditions of groundwater resources shall be provided;	Section 5.5.2. Closest active well is at the 1/2 mile limit, so groundwater modeling was not performed.		
Appendix B (g) (14) (iii)		Section 5.5.2		
Appendix B (g) (14) (iv)	If not using a zero liquid discharge project design for cooling and process waters, include the effects of the proposed wastewater disposal method on receiving waters, the feasibility of using pre-treatment techniques to reduce impacts, and beneficial uses of the receiving waters. Include an explanation why the zero liquid discharge process is “environmentally undesirable,” or “economically unsound;”	Not Applicable; Project is a zero liquid discharge design.		
Appendix B (g) (14) (v)	If using fresh water, include a discussion of the cumulative impacts, alternative water supply sources and alternative cooling technologies considered as part of the project design. Include an explanation of why alternative water supplies and alternative cooling are “environmentally undesirable,” or “economically unsound; ”	Section 5.5.2		
Appendix B (g) (14) (vi)	The effects of the project on the 100-year flood plain, flooding potential of adjacent lands or water bodies, or other water inundation zones; and	Section 5.5.2.4 Pages 5.5-15		

SITING REGULATIONS	INFORMATION	AFC PAGE NUMBER AND SECTION NUMBER	ADEQUATE YES OR NO	INFORMATION REQUIRED TO MAKE AFC CONFORM WITH REGULATIONS
Appendix B (g) (14) (vii)	All assumptions, evidence, references, and calculations used in the analysis to assess these effects.	Section 5.5.2		
Appendix B (i) (1) (A)	Tables which identify laws, regulations, ordinances, standards, adopted local, regional, state, and federal land use plans, leases, and permits applicable to the proposed project, and a discussion of the applicability of, and conformance with each. The table or matrix shall explicitly reference pages in the application wherein conformance, with each law or standard during both construction and operation of the facility is discussed; and	Section 5.5.4 Pages 5.5-16		
Appendix B (i) (1) (B)	Tables which identify each agency with jurisdiction to issue applicable permits, leases, and approvals or to enforce identified laws, regulations, standards, and adopted local, regional, state and federal land use plans, and agencies which would have permit approval or enforcement authority, but for the exclusive authority of the commission to certify sites and related facilities.	Section 5.5.4 Pages 5.5-16		
Appendix B (i) (2)	The name, title, phone number, address (required), and email address (if known), of an official who was contacted within each agency, and also provide the name of the official who will serve as a contact person for Commission staff.	Section 5.5.4.4 Pages 5.5-23		
Appendix B (i) (3)	A schedule indicating when permits outside the authority of the commission will be obtained and the steps the applicant has taken or plans to take to obtain such permits.	Section 5.5.4.5 Pages 5.5-24		

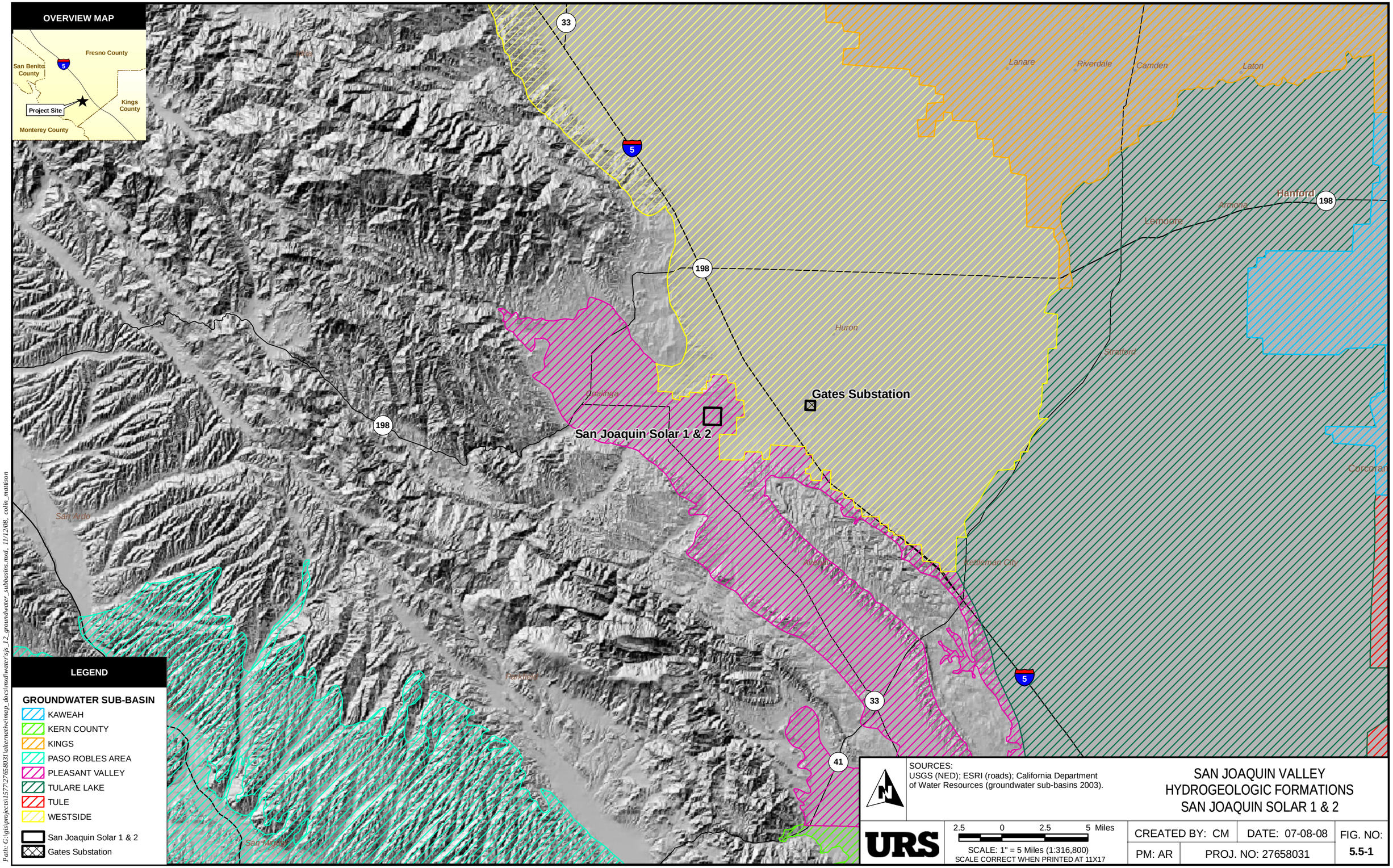

SOURCES:
USGS (NED); ESRI (roads); California Department of Water Resources (groundwater sub-basins 2003).

SAN JOAQUIN VALLEY
HYDROGEOLOGIC FORMATIONS
SAN JOAQUIN SOLAR 1 & 2

URS

2.5 0 2.5 5 Miles
SCALE: 1" = 5 Miles (1:316,800)
SCALE CORRECT WHEN PRINTED AT 11X17

CREATED BY: CM	DATE: 07-08-08	FIG. NO:
PM: AR	PROJ. NO: 27658031	5.5-1

Path: G:\gis\projects\1577\27658031\alternative\map_docs\mxd\waterisjs_12_groundwater_subbasins.mxd, 11/12/08, colin_mattison

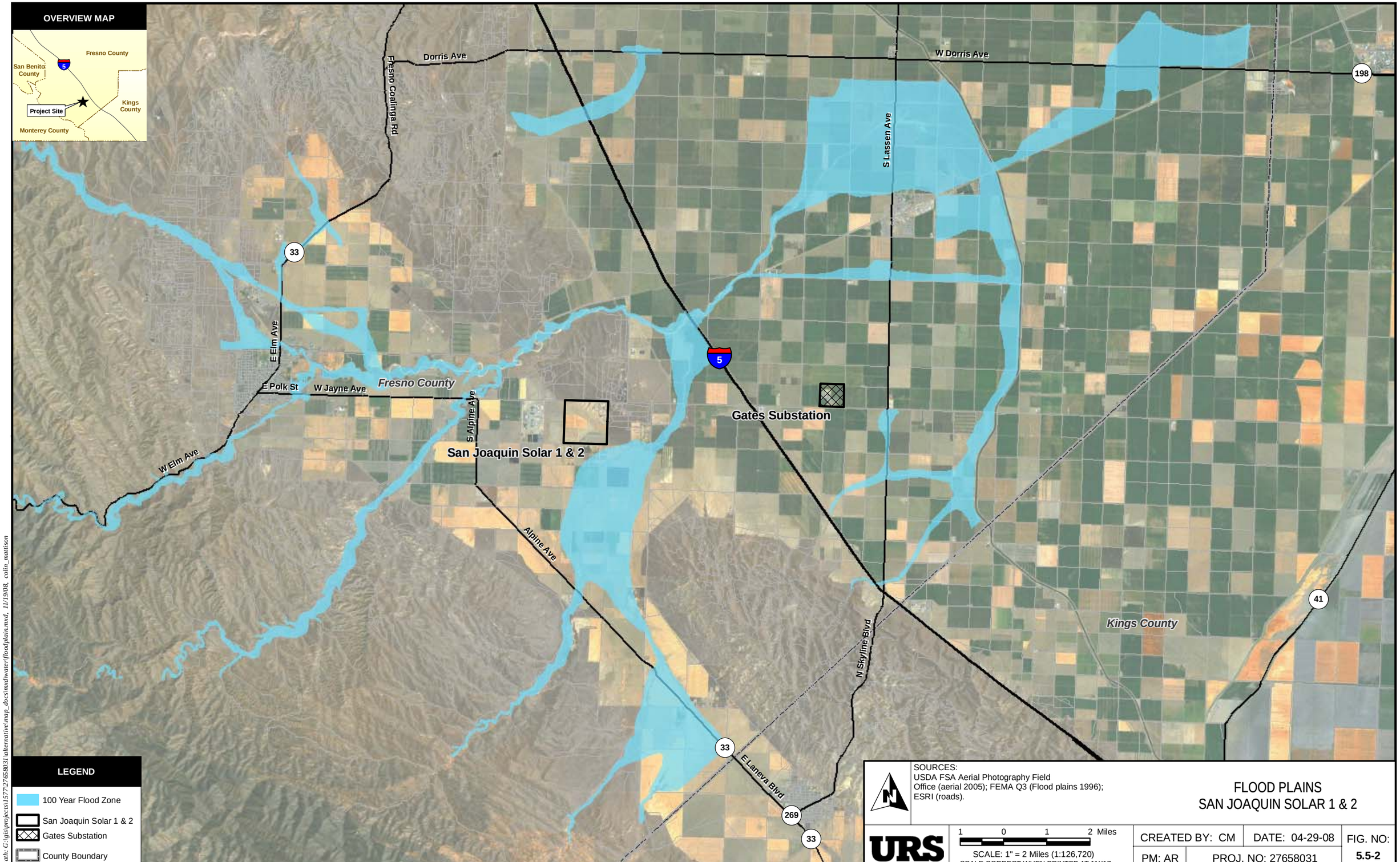

FLOOD PLAINS
SAN JOAQUIN SOLAR 1 & 2

Path: G:\gis\projects\1577\27658031\alternative\map_docs\mxd\water\floodplain.mxd, 11/19/08, colin_mattison

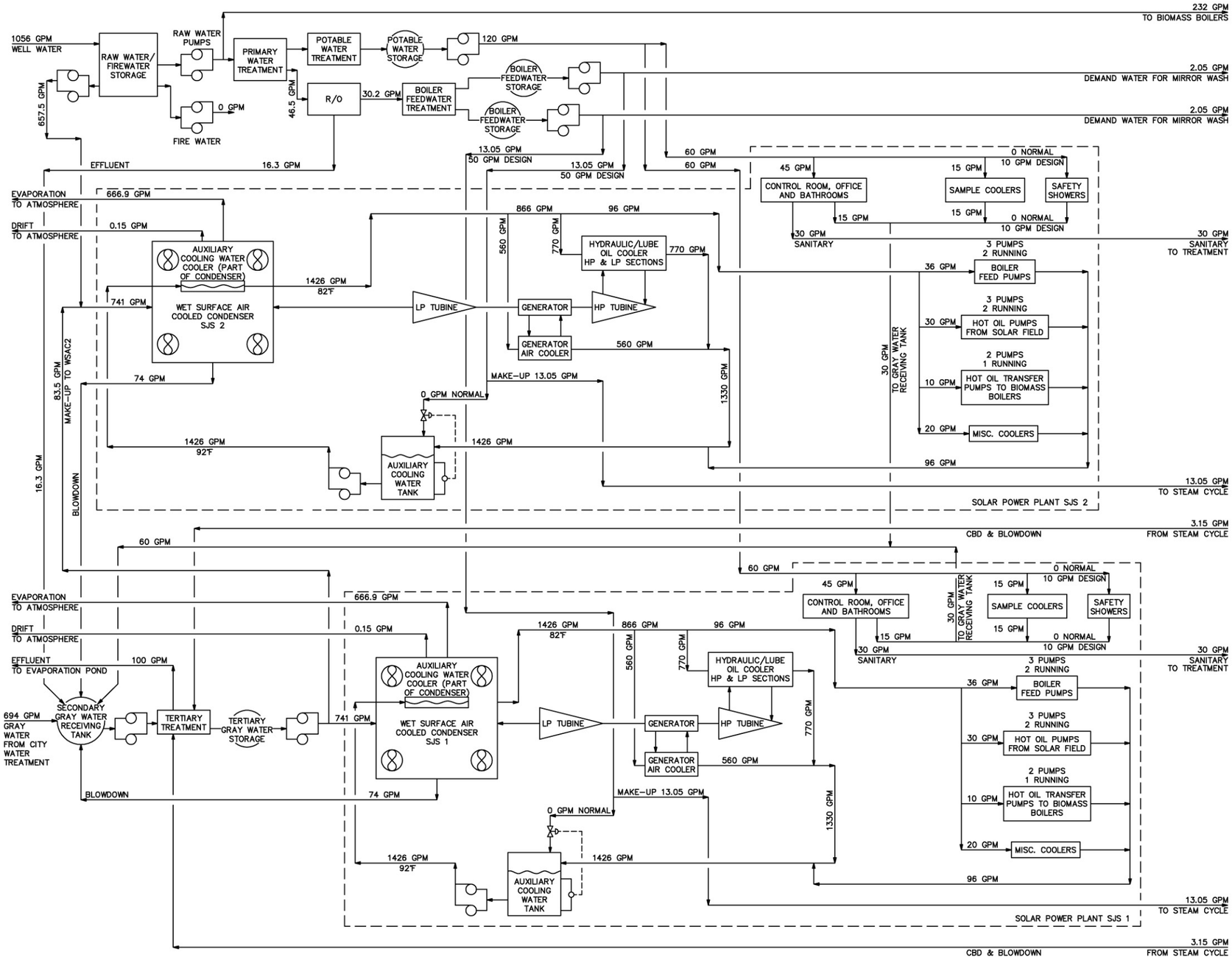

SOURCE:
Ford, Bacon & Davis, 2008

WATER BALANCE DIAGRAM
SAN JOAQUIN SOLAR 1 & 2

URS	NO SCALE	CREATED BY: CM	DATE: 11-11-08	FIG. NO:
		PM: AR	PROJ. NO: 27658031	5.5-3

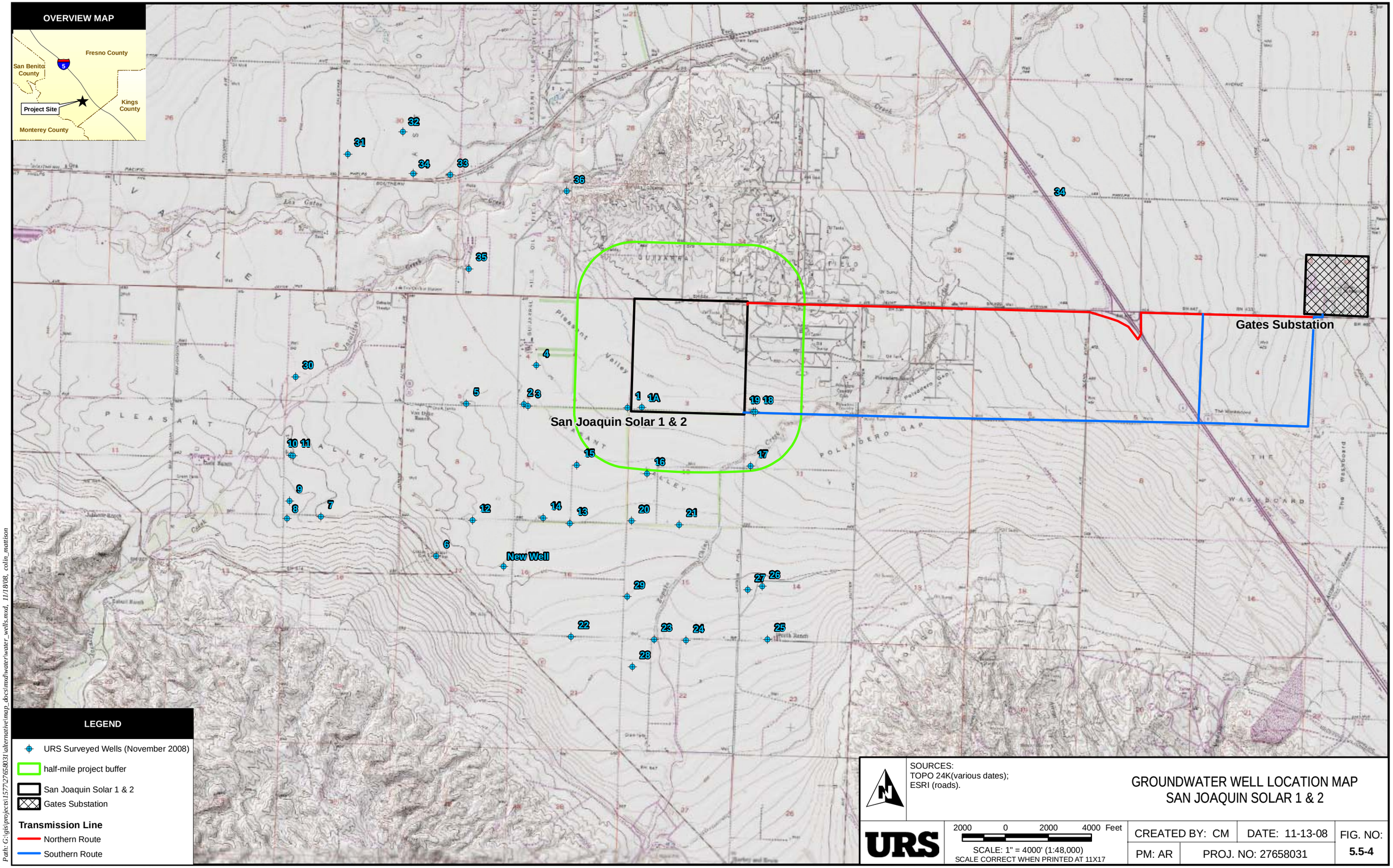

Path: G:\gis\projects\1577\27658031\alternative\map_docs\mxd\water\water_wells.mxd, 11/18/08, colin_mattison