PROPERTY OWNERS WITHIN 1000FT

APN	ACTIVE_DAT	ROLL_YEAR	OBJECTID	LAYER_AREA	LAYER_LEN	OID_	USE_HIGH_B	USE_PRIMAR	USE_SECOND	TX_ADDR_M_	TX_ADDR_M1	TX_ADDR__1
07506067S	1/2/1900	0	94840	9924229.825	12956.5077	30602	O	FIE	000	5494 W MT WHITNEY AVE	RIVERDALE CA 93656	
08532030S	1/2/1900	0	96153	7085595.691	10645.2828	34442	O	FIE	VLM	25366 W DORRIS	COALINGA CA 93210	
08502021S	9/23/1997	0	96154	27930082.23	21219.58254	33872	O	PIS	VLM	13762 1ST	HANFORD CA 93230	
08504048S	1/2/1900	0	96224	6697061.912	10352.27059	33934	O	PIS	000	% D WOODS	7463 N HIGHGROVE LN	FRESNO CA 93711
07506045SU	1/2/1900	0	98423	7904658.371	13799.9172	0						
07506054S	1/2/1900	0	99083	1078337.458	4408.967215	30589	A	ORA	VLM	P O BOX 1260	HURON CA 93234	
08504040S	1/2/1900	0	99858	1905589.562	6451.946312	33930	A	ORA	VLM	% M DRESICK	P O BOX 1260	HURON CA 93234
08504029S	1/2/1900	0	100492	15525058.21	16742.04551	33925	O	ORA	000	P O BOX 1260	HURON CA 93234	
08504027S	1/2/1900	0	100514	4315082.226	10133.09909	33924	O	ORA	000	P O BOX 1260	HURON CA 93234	
08504045S	1/2/1900	0	100524	3434543.747	7845.618249	33932	O	ALM	000	P O BOX 1260	HURON CA 93234	
07306034	1/2/1900	0	93574	27975068.96	21147.09878	30383	A	OIL	000	% TAX DEPT	P O BOX 1392	BAKERSFIELD CA 93302
08503004ST	1/2/1900	0	96143	3491135.225	7958.302162	33898						
08503006ST	1/2/1900	0	96149	3458640.787	7941.175137	33899						
08503007S	1/2/1900	0	96150	1724273.688	5253.466677	33900	A	FIE	000	2727 W BLUFF #112	FRESNO CA 93711	
08532031S	1/2/1900	0	96152	17618890.76	18596.80742	34443	O	FIE	VLM	25366 W DORRIS	COALINGA CA 93210	
08504021S	1/2/1900	0	96225	6829822.016	10249.26859	33921	O	FIE	000	% AGRICULTURE IND INC	P O BOX 1076	WEST SACRAMENTO CA 95691
08504024	1/2/1900	0	96235	14786912.98	17358.17363	33923	O	PIS	000	7041 N VAN NESS BLVD	FRESNO CA 93711	
07506066S	1/2/1900	0	97742	6292503.339	13043.28334	30601	O	FIE	000	P O BOX 995	HURON CA 93234	
07506019S	1/2/1900	0	98451	6844383.272	10465.15605	30576	O	FIE	000	772 S OCEAN	CAYUCOS CA 93430	
07507013S	1/2/1900	0	98462	6908866.51	10498.74442	30604	O	FIE	VLM	P O BOX 1260	HURON CA 93234	
08533011S	1/2/1900	0	99981	30464.48803	1857.355697	34451	C	OUT	LOT	% USA REAL ESTATE	154 E ELM	COALINGA CA 93210
07309019S	1/2/1900	0	93611	3255085.177	7650.121586	30426	A	PAS	OIL	5112 WORMAN	AHWAHNEE CA 93601	
07307040ST	1/2/1900	0	93612	235870.3543	5500.992255	30412						
07507034S	1/2/1900	0	94841	6554579.341	10559.65809	30617	O	FIE	VLM	P O BOX 995	HURON CA 93234	
08502012ST	1/2/1900	0	96134	7204288.086	10733.00653	33868						
08503059S	1/2/1900	0	96137	6376839.272	12913.1424	33909	A	PAS	S01	4230 W CAMBRIDGE	VISALIA CA 93277	
08503047S	1/2/1900	0	96138	3186115.977	7640.596482	33904	A	DRY	000	5493 E GEARY	FRESNO CA 93727	
08532029S	1/2/1900	0	96157	13699298.43	15701.33656	34441	O	FIE	VLM	25366 W DORRIS	COALINGA CA 93210	
07506055S	1/2/1900	0	99535	201075.2675	2029.326358	30590	A	ORA	000	C/O MICHAEL DRESICK	P O BOX 1260	HURON CA 93234
08504046S	1/2/1900	0	100525	3460556.352	7874.49118	33933	O	ALM	000	P O BOX 1260	HURON CA 93234	
08504013	1/2/1900	0	100545	27410812.22	20939.69686	33918	O	TRX	VLM	% TAX DEPT	P O BOX 1392	BAKERSFIELD CA 93302
07307037	1/2/1900	0	93578	20104995.65	20781.75901	30409	A	OIL	000	% TAX DEPT	P O BOX 1392	BAKERSFIELD CA 93302
07307024S	1/2/1900	0	93614	4295833.884	8506.654453	30401	O	PIS	VLM	1306 W HERNDON #108	FRESNO CA 93711	
07307016S	1/2/1900	0	93628	826030.3943	3863.359726	30399	A	POM	VLM	1129 HARKINS RD	SALINAS CA 93901	
08504036S	1/2/1900	0	96227	3448861.938	7894.587555	33928	O	FIE	000	% AGRICULTURE IND INC	P O BOX 1076	WEST SACRAMENTO CA 95691
08504001S	1/2/1900	0	99709	6820254.778	10451.96648	33913	O	FIE	000	P O BOX 1260	HURON CA 93234	
08504049S	1/2/1900	0	100045	1764741.249	5899.496483	33935	O	ALM	VLM	7463 N HIGHGROVE LN	FRESNO CA 93711	
08532026S	1/2/1900	0	100544	6850159.463	10469.25672	34440	O	PIS	000	1306 W HERNDON #108	FRESNO CA 93711	
07307014S	1/2/1900	0	93586	9511436.165	15771.82199	30398	O	PIS	000	737 E WOOD DUCK CIR	FRESNO CA 93720	
08504037S	1/2/1900	0	96226	3430532.265	7869.313298	33929	O	FIE	000	% AGRICULTURE IND INC	P O BOX 1076	WEST SACRAMENTO CA 95691
08504015S	1/2/1900	0	96233	6897989.305	10505.82083	33920	O	ALM	VLM	C/O WOOLF FARMING	P O BOX 215	HURON CA 93234
08504023	1/2/1900	0	96234	11140379.33	16004.22531	33922	O	PIS	000	7041 N VAN NESS BLVD	FRESNO CA 93711	
07506057S	1/2/1900	0	99365	790304.3344	3695.275862	30592	A	LEM	000	% M DRESICK	P O BOX 1260	HURON CA 93234
08504005S	1/2/1900	0	99801	6711609.335	10376.38844	33914	O	ALM	000	1771 PATTY DR	YUBA CITY CA 95993	
08533008S	1/2/1900	0	100103	89354.21059	1308.308555	34448	C	MHP	OM1	12171 KESTREL	KLAMATH FALLS OR 97601	
07309021ST	1/2/1900	0	93576	13805551.25	15761.28451	30428						
08532004S	1/2/1900	0	96155	14030245.12	15836.85741	34434	O	FIE	VLM	P O BOX 835	COALINGA CA 93210	
07506049S	1/2/1900	0	97722	17102957.41	17640.26197	30586	O	TRX	000	P O BOX 1260	HURON CA 93234	
08504035S	1/2/1900	0	99804	6746528.797	10372.68348	33927	O	FIE	000	P O BOX 1260	HURON CA 93234	
07309020S	1/2/1900	0	93613	3372004.651	7737.158888	30427	A	PAS	OM1	195 HOOVER ST	COALINGA CA 93210	
08503060	1/2/1900	0	96139	6793579.192	13109.81128	33910	A	PAS	000	P O BOX 7	DINOSAUR CO 81610	
08502013ST	1/2/1900	0	96148	3550904.044	7887.376649	33869						
08504012S	1/2/1900	0	96232	6877263.671	10490.02473	33917	O	ALM	OM2	P O BOX 995	HURON CA 93234	
08503014	12/15/1998	1999	99722	6594803.469	10265.88023	33902	A	OIL	000	% TAX DEPT	P O BOX 1392	BAKERSFIELD CA 93302
08504056S	8/26/1998	0	99775	3549655.31	8012.384576	33938	A	COS	ORA	P O BOX 1260	HURON CA 93234	
08505001S	1/2/1900	0	99817	27551531.98	21030.65987	33939	O	ALM	VLM	P O BOX 995	HURON CA 93234	
08503018S	1/2/1900	0	100523	13629214.48	15649.7627	33903	O	PIS	S01	1306 W HERNDON #108	FRESNO CA 93711	

APN	ACTIVE_DAT	ROLL_YEAR	OBJECTID	LAYER_AREA	LAYER_LEN	OID_	USE_HIGH_B	USE_PRIMAR	USE_SECOND	TX_ADDR_M_	TX_ADDR_M1	TX_ADDR__1
08503054S	1/2/1900	0	96147	3304646.427	7739.419199	33905	C	GOC	OM1	129 BRIDGE ST #B	ARROYO GRANDE CA 93420	
08505049S	1/2/1900	0	96237	6828922.438	10453.78404	33951	A	FIE	000	ATTN PROP TAX DEPT	P O BOX 1392	BAKERSFIELD CA 93302
07307024S	1/2/1900	0	98426	36034.24057	5222.051523	30401	O	PIS	VLM	1306 W HERNDON #108	FRESNO CA 93711	
07506031S	1/2/1900	0	98445	6755145.749	10320.57716	30579	O	FIE	VLM	P O BOX 1260	HURON CA 93234	
08533008S	1/2/1900	0	100087	122710.1647	1551.068778	34448	C	MHP	OM1	12171 KESTREL	KLAMATH FALLS OR 97601	

EQUIPMENT ELEVATION DIAGRAMS

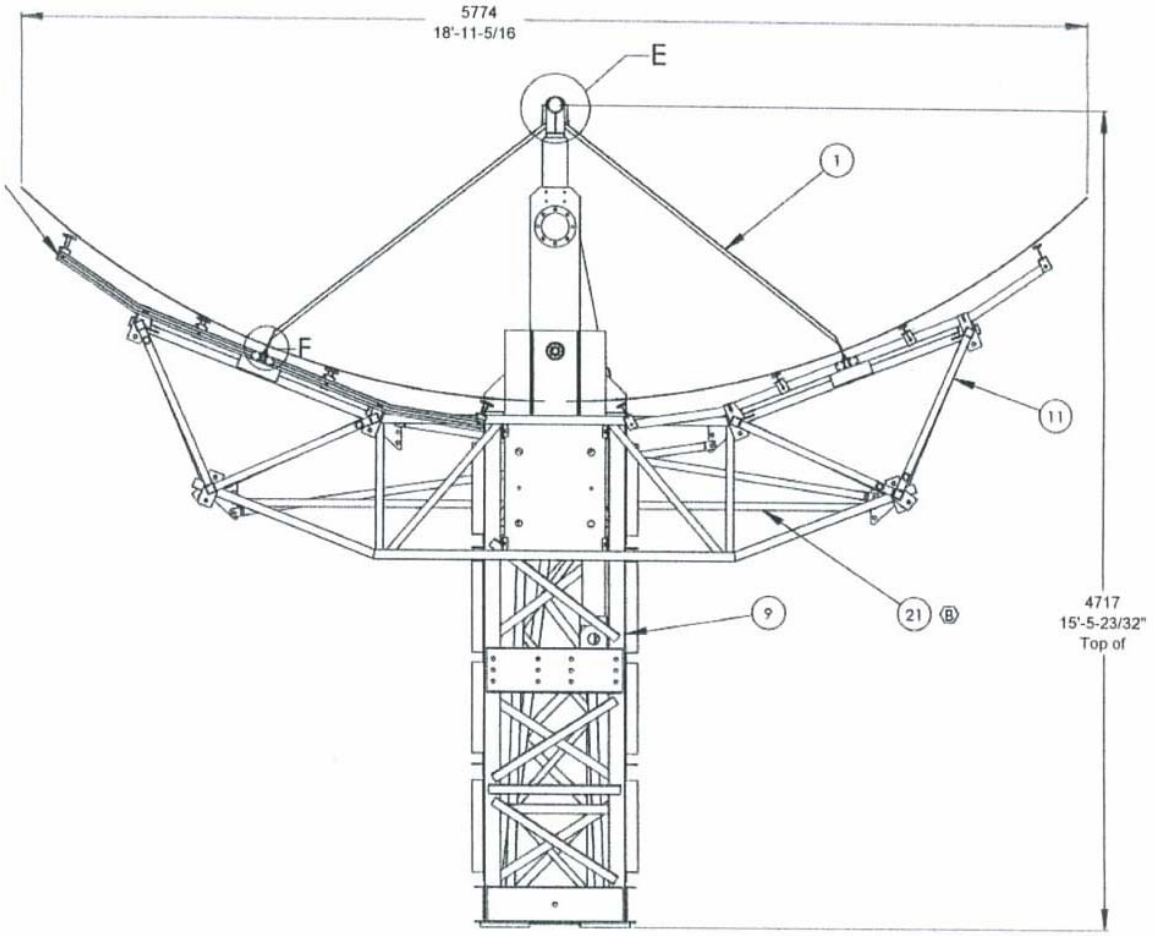

SCA MOTION CONTROL SYS END VIEW

NIAGARA BLOWER COMPANY

MAY 4, 2006

AIR TREATMENT / SOLAR PROJECTS
CELL LAYOUT
(NOTE: 2 CELLS / SITE)

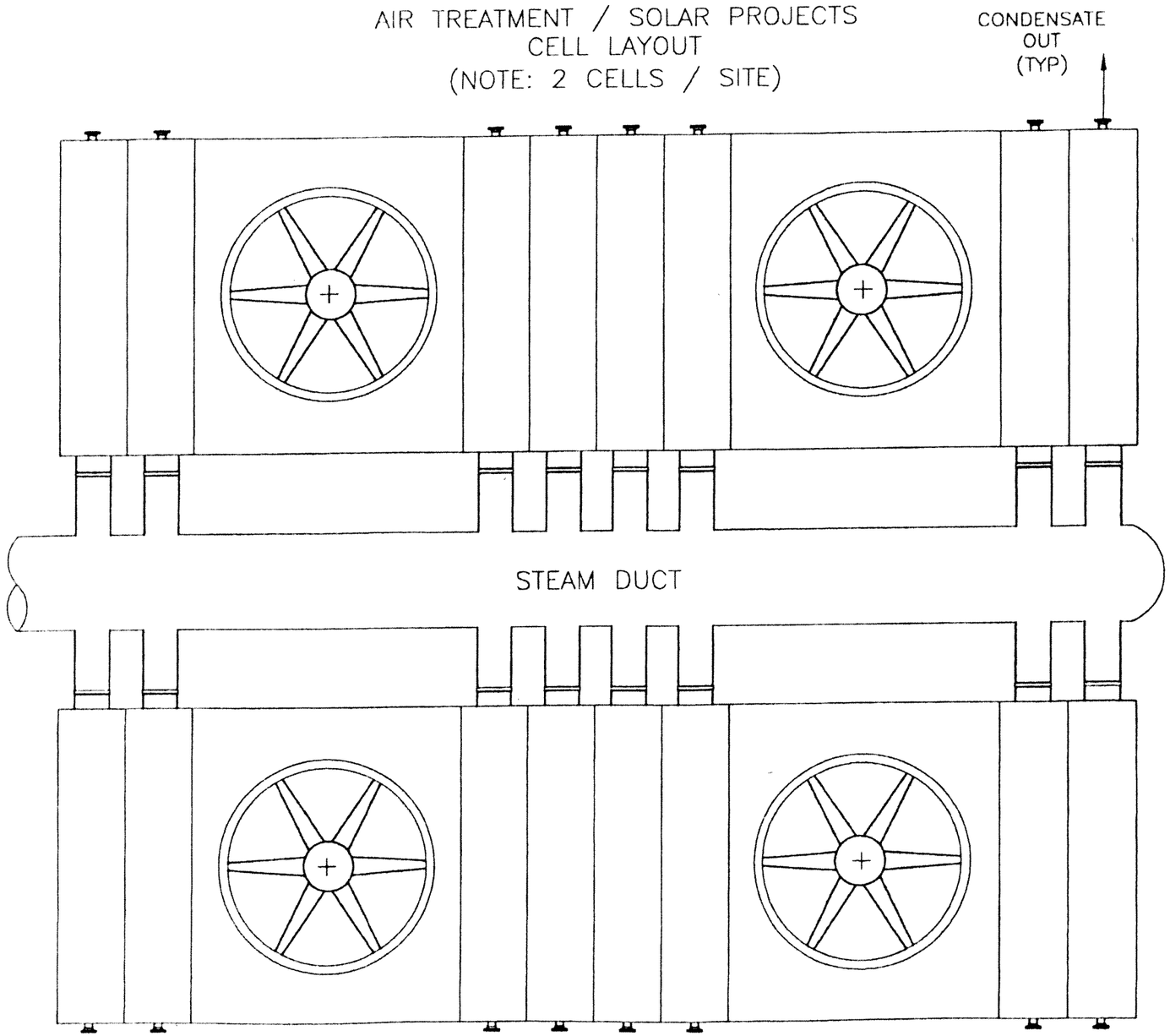

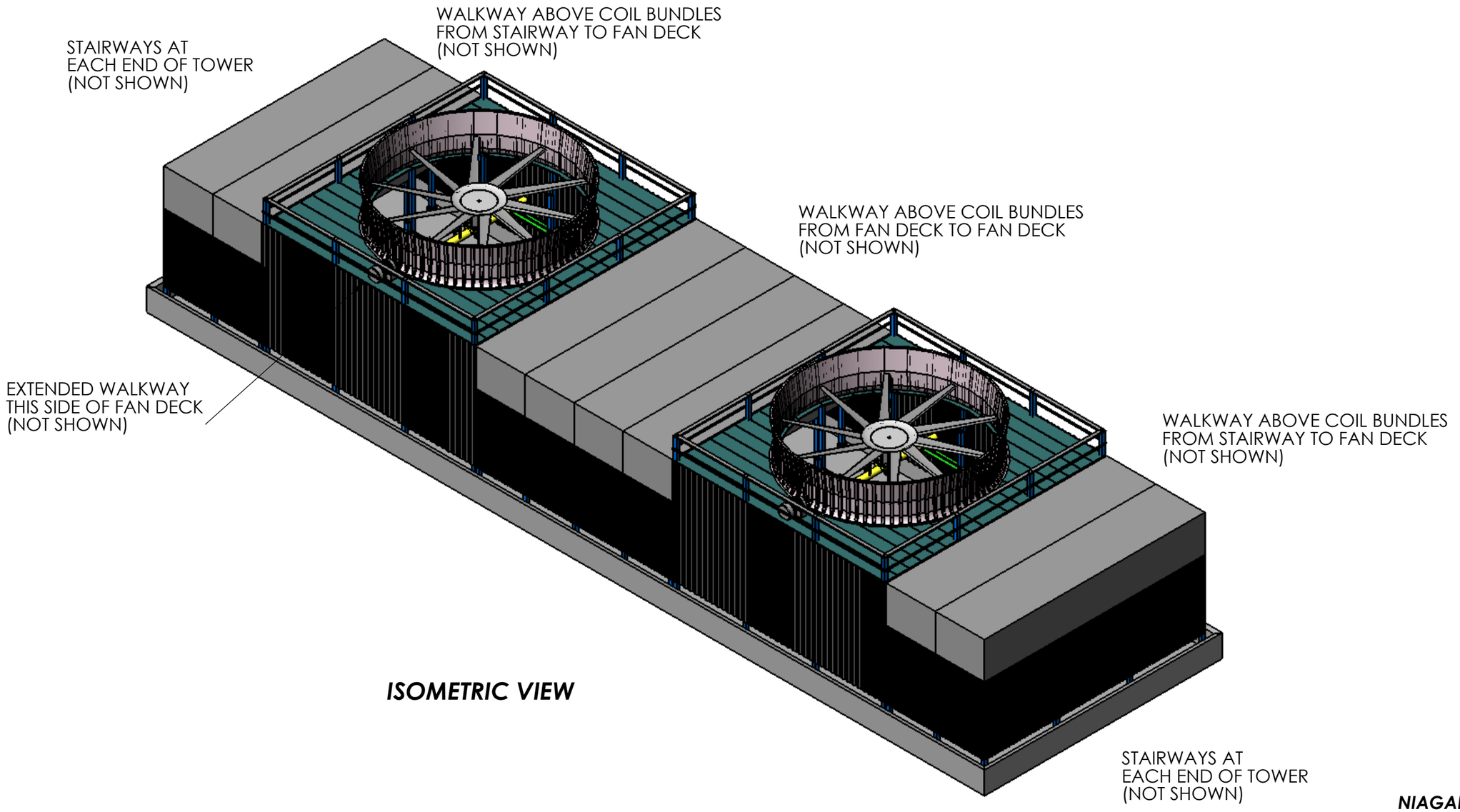

ISOMETRIC VIEW

NIAGARA BLOWER SOLAR PROJECTS

PROPRIETARY AND CONFIDENTIAL
THE INFORMATION CONTAINED IN THIS DRAWING IS THE SOLE PROPERTY OF COMPOSITE COOLING SOLUTIONS. ANY REPRODUCTION IN PART OR AS A WHOLE WITHOUT THE WRITTEN PERMISSION OF COMPOSITE COOLING SOLUTIONS IS PROHIBITED.

REVISION

NUM	DATE	DESCRIPTION	BY	CHK'D

CCSolutions Composite Cooling Solutions, L.P.

Composite Cooling Solutions

General Arrangement Drawing

DWG. NO.
NIAGARA BLOWER SOLAR PROJECTS

DRAWN	CHECKED	APPROVED	DATE	REV.
TLS			5/5/2006	0

DO NOT SCALE DRAWING | SCALE:1:500 | SHEET 1 OF 5

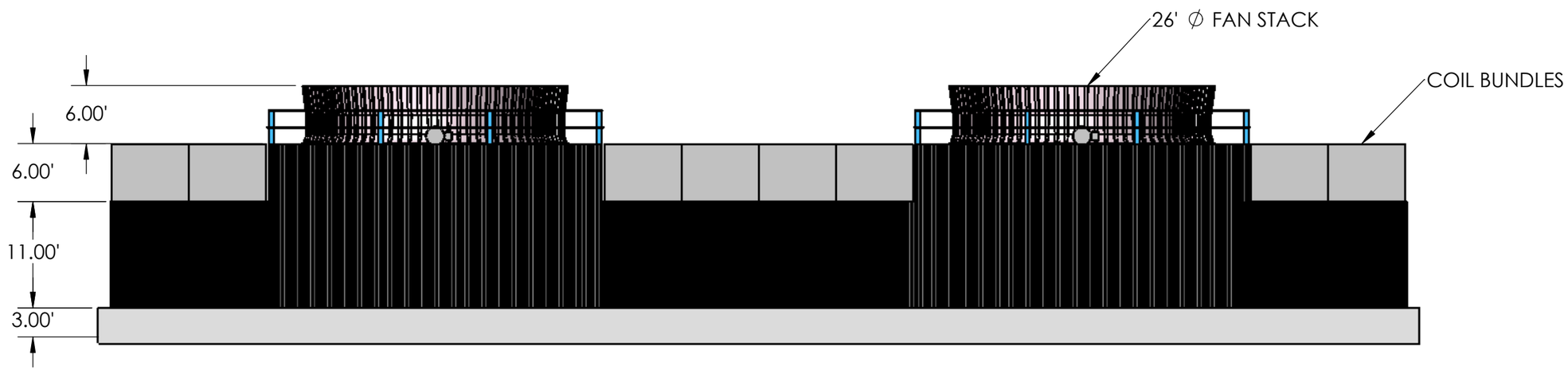

FRONT VIEW

NIAGARA BLOWER SOLAR PROJECTS

PROPRIETARY AND CONFIDENTIAL
THE INFORMATION CONTAINED IN THIS DRAWING IS THE SOLE PROPERTY OF COMPOSITE COOLING SOLUTIONS. ANY REPRODUCTION IN PART OR AS A WHOLE WITHOUT THE WRITTEN PERMISSION OF COMPOSITE COOLING SOLUTIONS IS PROHIBITED.

REVISION

NUM	DATE	DESCRIPTION	BY	CHK'D

CCSolutions Composite Cooling Solutions, L.P.

Composite Cooling Solutions

General Arrangement Drawing

DWG. NO.
NIAGARA BLOWER SOLAR PROJECTS

DRAWN	CHECKED	APPROVED	DATE	REV.
TLS			5/5/2006	0

DO NOT SCALE DRAWING | SCALE:1:175 | SHEET 2 OF 5

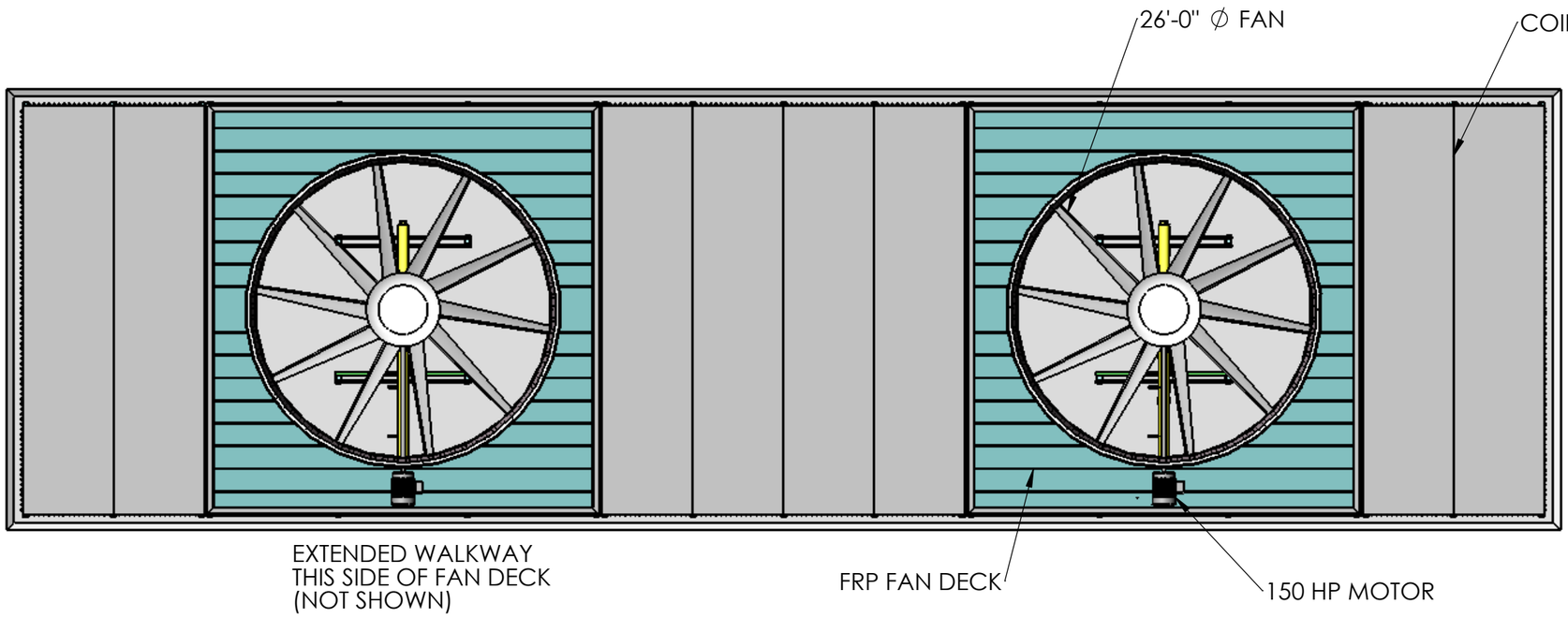

TOP VIEW

NIAGARA BLOWER SOLAR PROJECTS

PROPRIETARY AND CONFIDENTIAL
THE INFORMATION CONTAINED IN THIS DRAWING IS THE SOLE PROPERTY OF COMPOSITE COOLING SOLUTIONS. ANY REPRODUCTION IN PART OR AS A WHOLE WITHOUT THE WRITTEN PERMISSION OF COMPOSITE COOLING SOLUTIONS IS PROHIBITED.

REVISION

NUM	DATE	DESCRIPTION	BY	CHK'D

CCSolutions Composite Cooling Solutions, L.P.

Composite Cooling Solutions

General Arrangement Drawing

DWG. NO.
NIAGARA BLOWER SOLAR PROJECTS

DRAWN	CHECKED	APPROVED	DATE	REV.
TLS			5/5/2006	0

DO NOT SCALE DRAWING | SCALE:1:150 | SHEET 3 OF 5

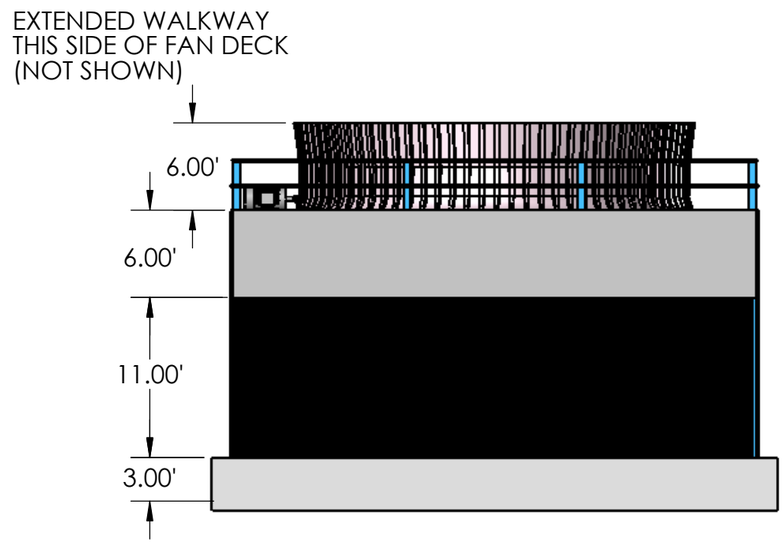

END VIEW

NIAGARA BLOWER SOLAR PROJECTS

PROPRIETARY AND CONFIDENTIAL
THE INFORMATION CONTAINED IN THIS DRAWING IS THE SOLE PROPERTY OF COMPOSITE COOLING SOLUTIONS. ANY REPRODUCTION IN PART OR AS A WHOLE WITHOUT THE WRITTEN PERMISSION OF COMPOSITE COOLING SOLUTIONS IS PROHIBITED.

REVISION

NUM	DATE	DESCRIPTION	BY	CHK'D

CCSolutions Composite Cooling Solutions, L.P.

Composite Cooling Solutions

General Arrangement Drawing

DWG. NO.
NIAGARA BLOWER SOLAR PROJECTS

DRAWN	CHECKED	APPROVED	DATE	REV.
TLS			5/5/2006	0

DO NOT SCALE DRAWING | SCALE:1:150 | SHEET 4 OF 5

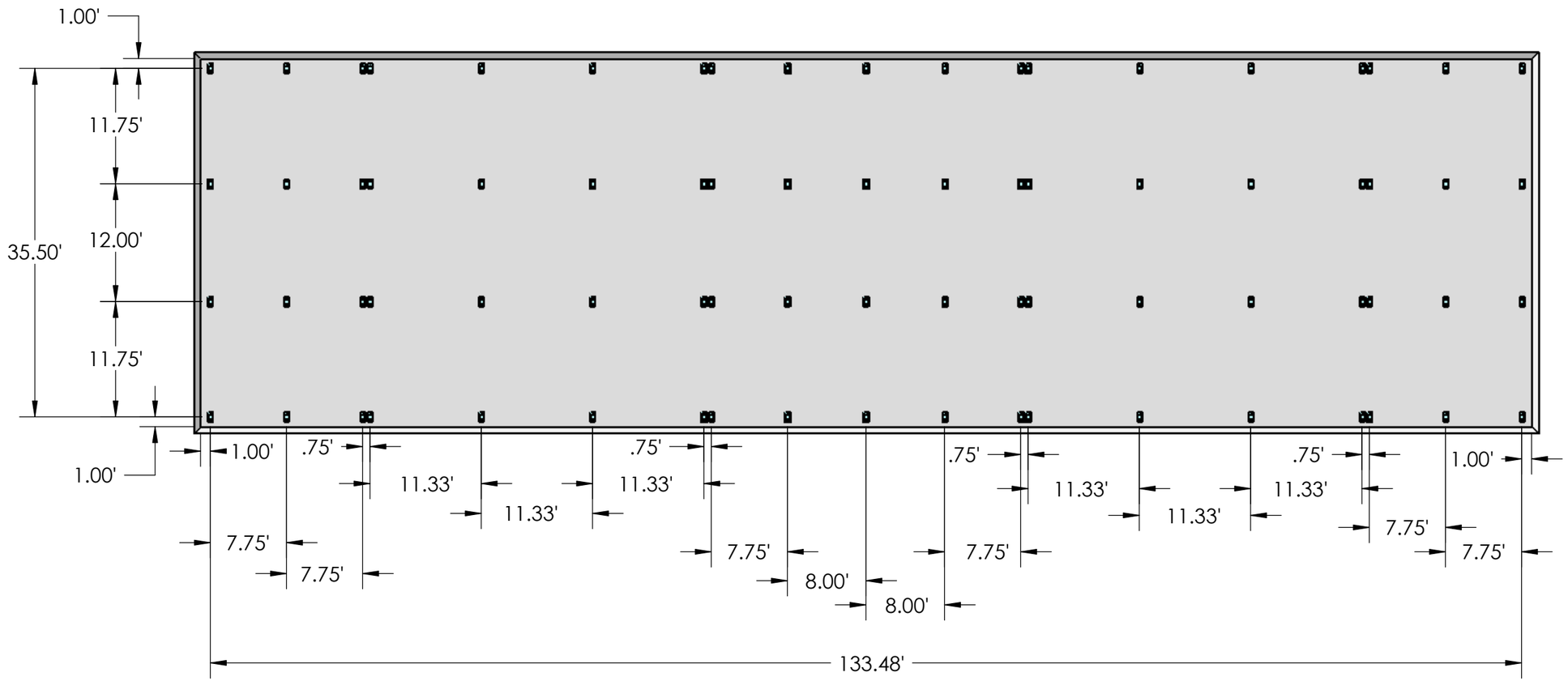

PLAN VIEW

NIAGARA BLOWER SOLAR PROJECTS

PROPRIETARY AND CONFIDENTIAL
THE INFORMATION CONTAINED IN THIS DRAWING IS THE SOLE PROPERTY OF COMPOSITE COOLING SOLUTIONS. ANY REPRODUCTION IN PART OR AS A WHOLE WITHOUT THE WRITTEN PERMISSION OF COMPOSITE COOLING SOLUTIONS IS PROHIBITED.

REVISION

NUM	DATE	DESCRIPTION	BY	CHK'D

CCSolutions Composite Cooling Solutions, L.P.

Composite Cooling Solutions

Column Anchorage Locations

DWG. NO.
NIAGARA BLOWER SOLAR PROJECTS

DRAWN	CHECKED	APPROVED	DATE	REV.
TLS			5/5/2006	0

DO NOT SCALE DRAWING | SCALE:1:500 | SHEET 5 OF 5

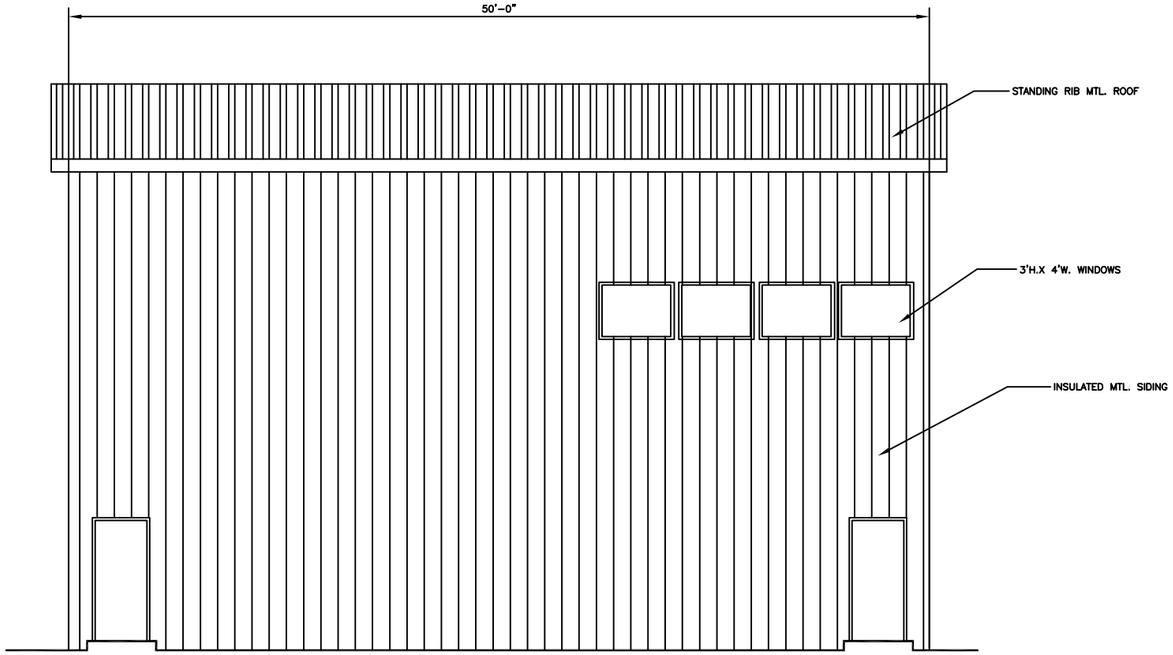

1 SIDE ELEVATION– CONTROL BLDG.(SJS 1)
SCALE: 1/4" = 1'-0"

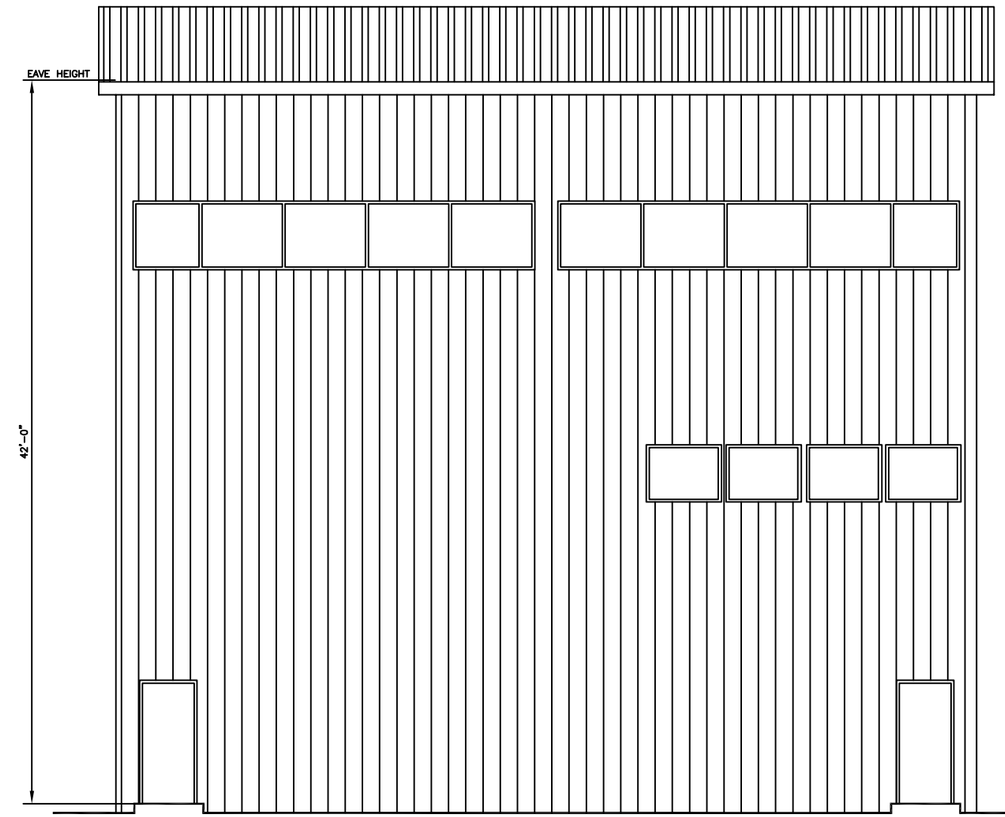

1A SIDE ELEVATION– CONTROL BLDG.(SJS 2)
SCALE: 1/4" = 1'-0"

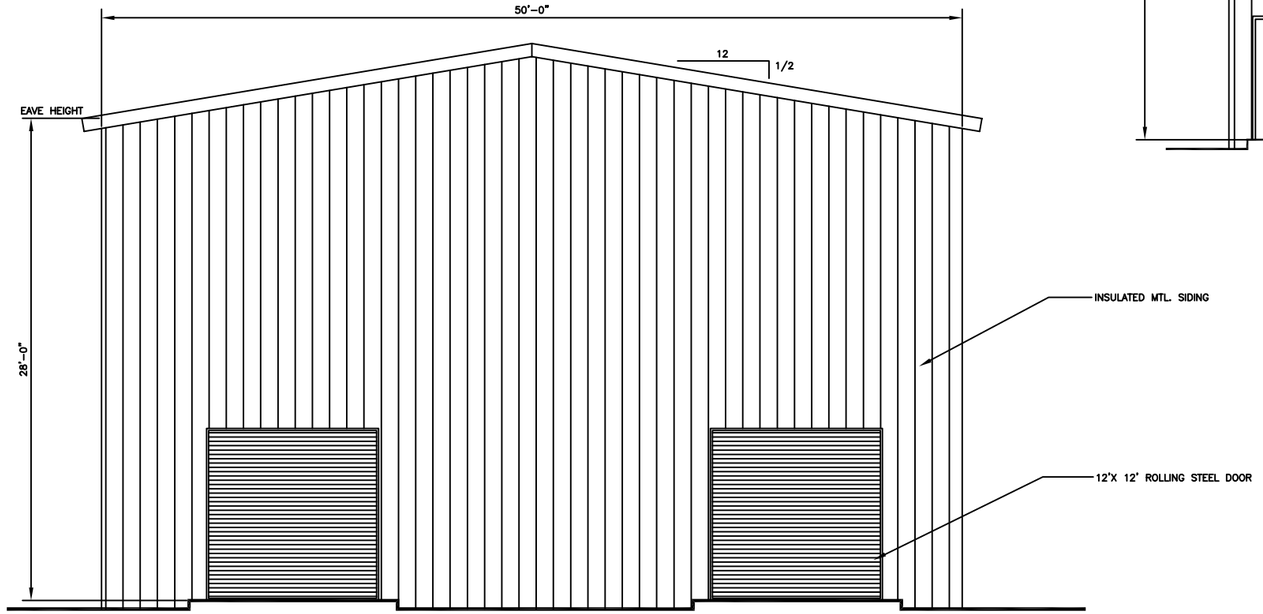

2 END ELEVATION– CONTROL BLDG.
SCALE: 1/4" = 1'-0"

REV	DATE	DRWN BY	CHKD BY	APVD BY	DESCRIPTION
A	11/21/08	KRS	GAG	DCG	ISSUED FOR FEL 2 REPORT

REVISIONS

Ford, Bacon & Davis
A Limited Liability Company

CONFIDENTIAL
THIS GRAPHIC OR OTHER MATERIAL IS THE EXCLUSIVE AND CONFIDENTIAL PROPERTY OF FORD, BACON & DAVIS, LLC AND MUST NOT BE REPRODUCED, DISTRIBUTED, PUBLISHED, OR USED IN ANY OTHER MANNER IN THE ABSENCE OF THE PRIOR WRITTEN CONSENT OF AN AUTHORIZED REPRESENTATIVE OF FORD, BACON & DAVIS, LLC.

SPINNAKER
SAN JOAQUIN, CA

CONTROL BUILDING
ELEVATIONS

FB&D JOB NUMBER: Z5007
SCALE: NONE
DATE: 11-19-08
DRAWN BY: D. JONES

FBD-5007-A-001

REV. A

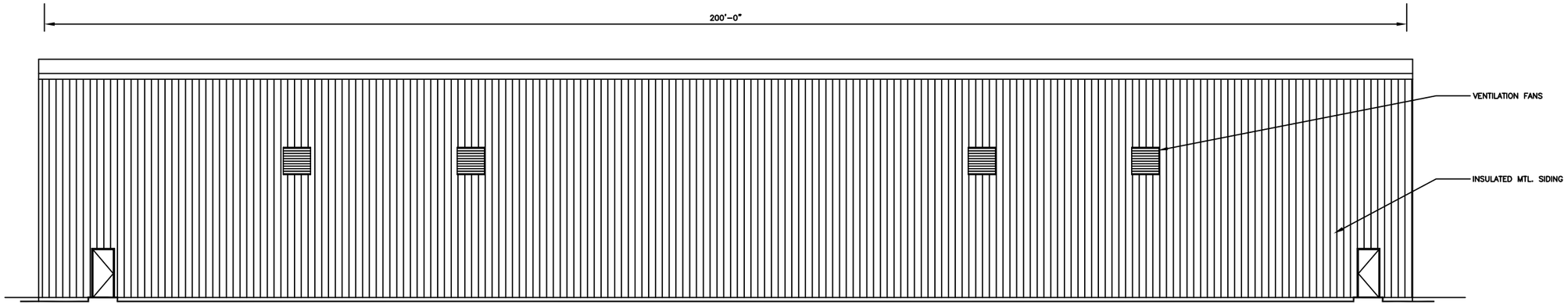

2 SIDE ELEVATION– WAREHOUSE
SCALE: 1/8" = 1'-0"

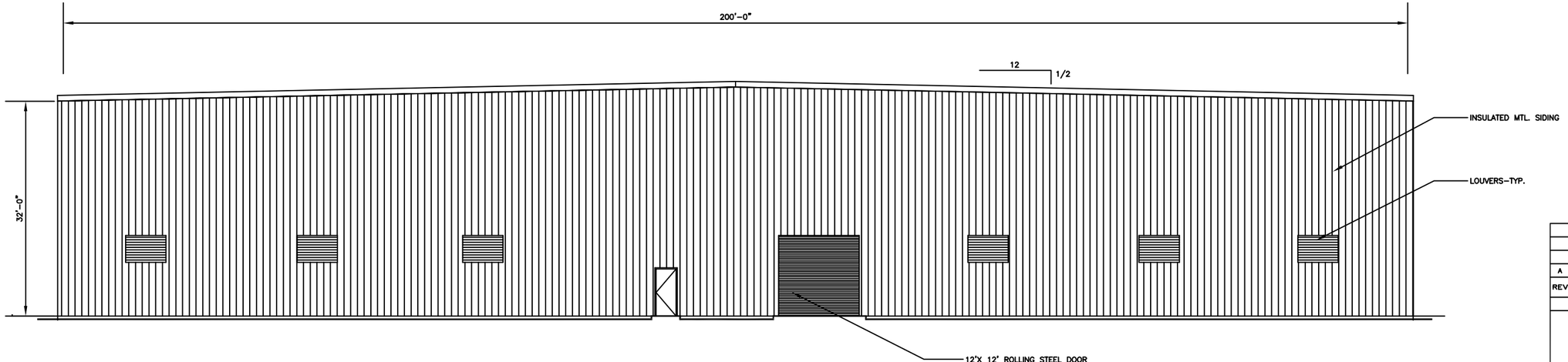

1 FRONT ELEVATION– WAREHOUSE
SCALE: 1/8" = 1'-0"

REV	DATE	DRWN BY	CHKD BY	APVD BY	DESCRIPTION
A	11/21/08	KRS	GAG	DCG	ISSUED FOR FEL 2 REPORT

REVISIONS

Ford, Bacon & Davis
A Limited Liability Company

CONFIDENTIAL
THIS GRAPHIC OR OTHER MATERIAL IS THE EXCLUSIVE AND CONFIDENTIAL PROPERTY OF FORD, BACON & DAVIS, LLC AND MUST NOT BE REPRODUCED, DISTRIBUTED, PUBLISHED, OR USED IN ANY OTHER MANNER IN THE ABSENCE OF THE PRIOR WRITTEN CONSENT OF AN AUTHORIZED REPRESENTATIVE OF FORD, BACON & DAVIS, LLC.

SPINNAKER
SAN JOAQUIN, CA

WAREHOUSE
ELEVATIONS

FB&D JOB NUMBER: Z5007
SCALE: NONE
DATE: 11-19-08
DRAWN BY: D. JONES

FBD–5007–A–003

REV. A

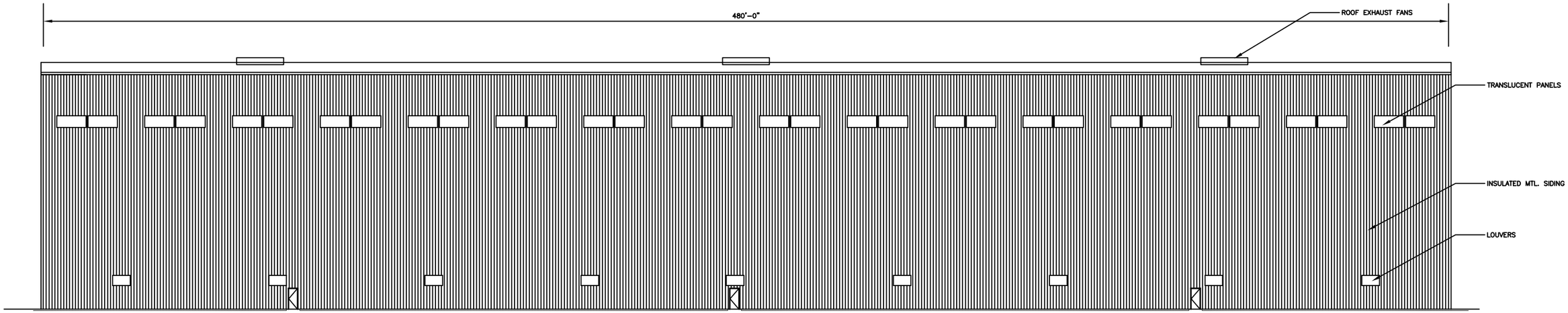

2 SIDE ELEVATION– UNLOADING BUILDING
SCALE: 1/16" = 1'-0"

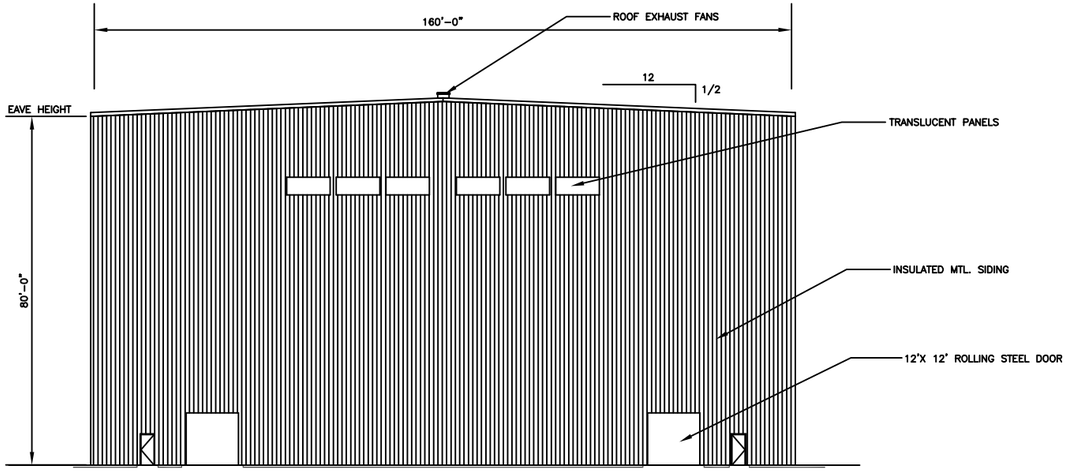

1 FRONT ELEVATION– UNLOADING BUILDING
SCALE: 1/16" = 1'-0"

REV	DATE	DRWN BY	CHKD BY	APVD BY	DESCRIPTION
A	11/21/08	KRS	GAG	DCG	ISSUED FOR FEL 2 REPORT

REVISIONS

Ford, Bacon & Davis
A Limited Liability Company

CONFIDENTIAL
THIS GRAPHIC OR OTHER MATERIAL IS THE EXCLUSIVE AND CONFIDENTIAL PROPERTY OF FORD, BACON & DAVIS, LLC AND MUST NOT BE REPRODUCED, DISTRIBUTED, PUBLISHED, OR USED IN ANY OTHER MANNER IN THE ABSENCE OF THE PRIOR WRITTEN CONSENT OF AN AUTHORIZED REPRESENTATIVE OF FORD, BACON & DAVIS, LLC.

SPINNAKER
SAN JOAQUIN, CA

UNLOADING BUILDING
ELEVATIONS

FB&D JOB NUMBER: Z5007
SCALE: NONE
DATE: 11-19-08
DRAWN BY: D. JONES

FBD-5007-A-004

REV. A

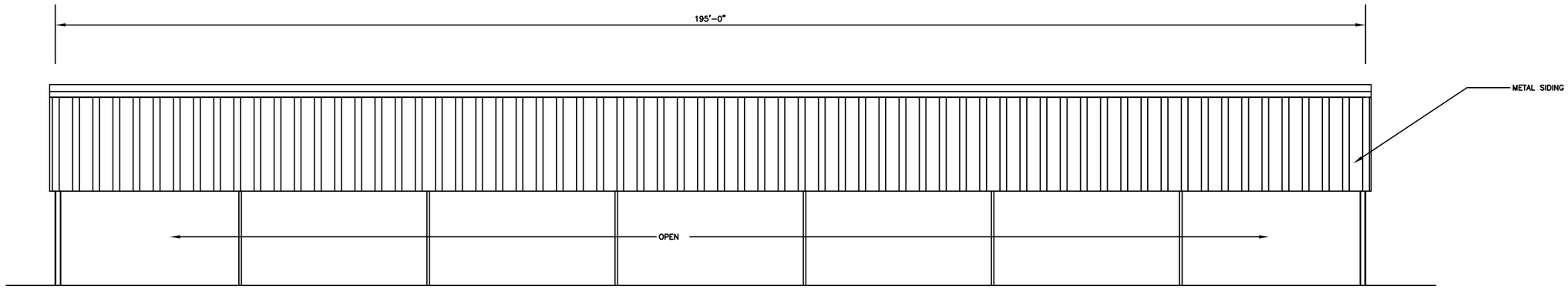

2 SIDE ELEVATION– CONSTRUCTION ASSEMBLY
SCALE: 1/8" = 1'-0"

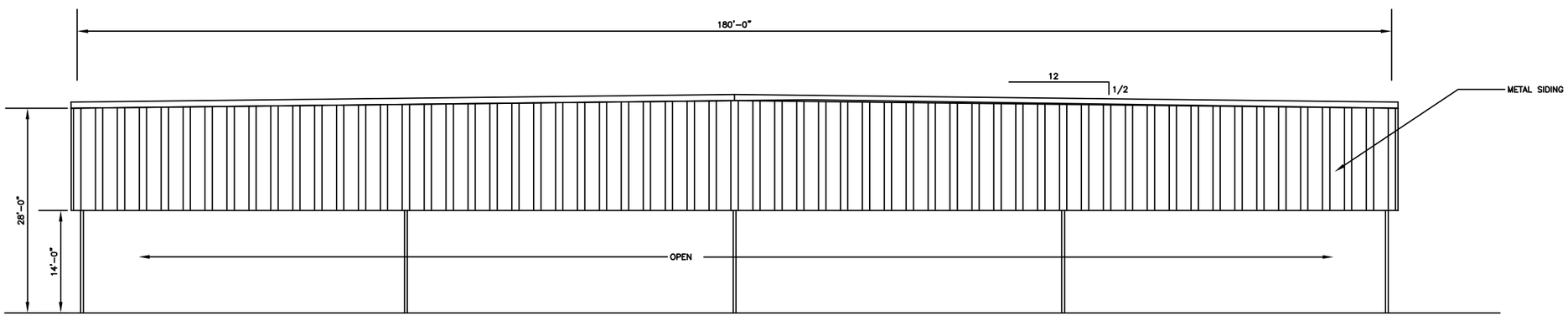

1 FRONT ELEVATION– CONSTRUCTION ASSEMBLY
SCALE: 1/8" = 1'-0"

REV	DATE	DRWN BY	CHKD BY	APVD BY	DESCRIPTION
A	11/21/08	KRS	GAG	DCG	ISSUED FOR FEL 2 REPORT

REVISIONS

Ford, Bacon & Davis
A Limited Liability Company

CONFIDENTIAL
THIS GRAPHIC OR OTHER MATERIAL IS THE EXCLUSIVE AND CONFIDENTIAL PROPERTY OF FORD, BACON & DAVIS, LLC AND MUST NOT BE REPRODUCED, DISTRIBUTED, PUBLISHED, OR USED IN ANY OTHER MANNER IN THE ABSENCE OF THE PRIOR WRITTEN CONSENT OF AN AUTHORIZED REPRESENTATIVE OF FORD, BACON & DAVIS, LLC.

SPINNAKER
SAN JOAQUIN, CA

CONSTRUCTION ASSEMBLY
BUILDING ELEVATIONS

FB&D JOB NUMBER: Z5007
SCALE: NONE
DATE: 11-19-08
DRAWN BY: D. JONES

FBD-5007-A-005

REV. A

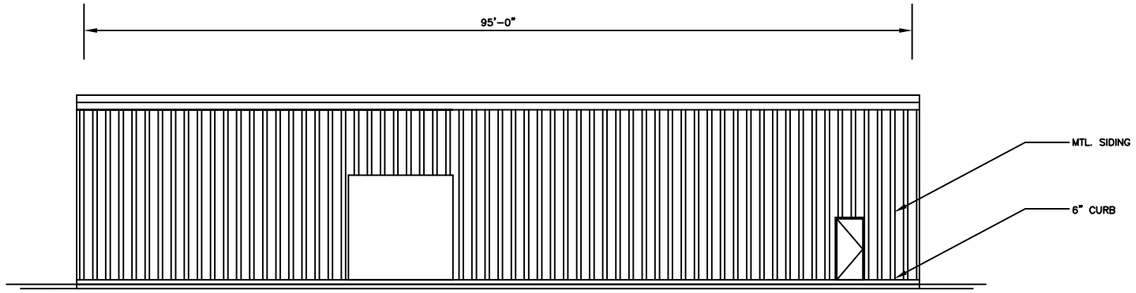

2 SIDE ELEVATION– WATER TREATMENT BLDG.
SCALE: 1/8" = 1'-0"

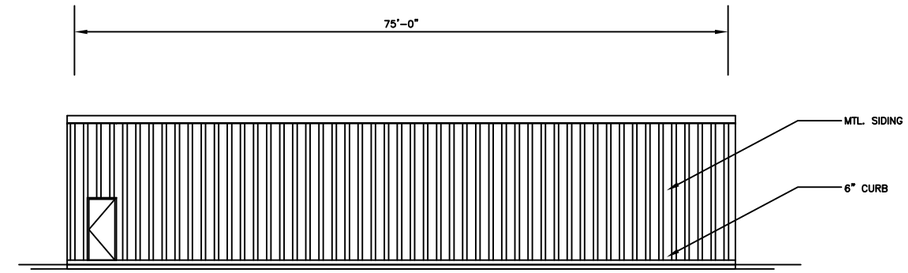

4 SIDE ELEVATION– MCC BLDG.
SCALE: 1/8" = 1'-0"

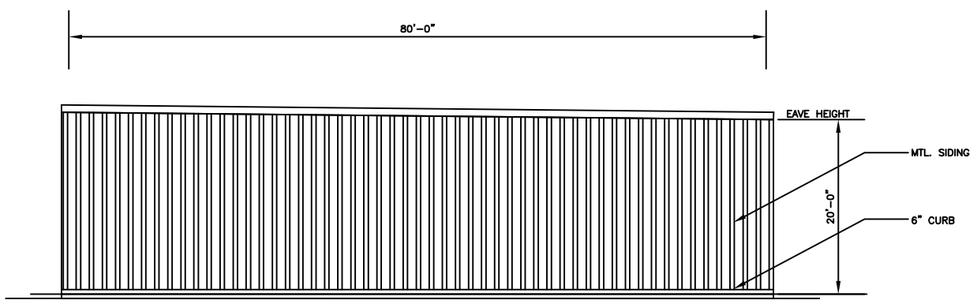

1 FRONT ELEVATION– WATER TREATMENT BLDG.
SCALE: 1/8" = 1'-0"

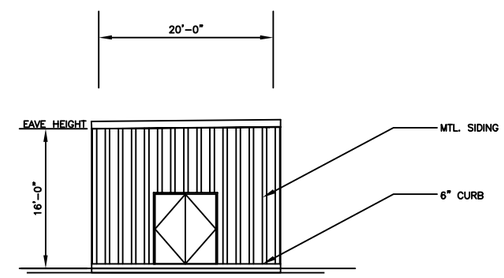

3 FRONT ELEVATION– MCC BLDG.
SCALE: 1/8" = 1'-0"

REV	DATE	DRWN BY	CHKD BY	APVD BY	DESCRIPTION
A	11/21/08	KRS	GAG	DCG	ISSUED FOR FEL 2 REPORT

REVISIONS

Ford, Bacon & Davis
A Limited Liability Company

CONFIDENTIAL
THIS GRAPHIC OR OTHER MATERIAL IS THE EXCLUSIVE AND CONFIDENTIAL PROPERTY OF FORD, BACON & DAVIS, LLC AND MUST NOT BE REPRODUCED, DISTRIBUTED, PUBLISHED, OR USED IN ANY OTHER MANNER IN THE ABSENCE OF THE PRIOR WRITTEN CONSENT OF AN AUTHORIZED REPRESENTATIVE OF FORD, BACON & DAVIS, LLC.

SPINNAKER
SAN JOAQUIN, CA

WATER TREATMENT & MCC
BUILDING ELEVATIONS

FB&D JOB NUMBER: Z5007
SCALE: NONE
DATE: 11-19-08
DRAWN BY: D. JONES

FBD-5007-A-006

REV. A

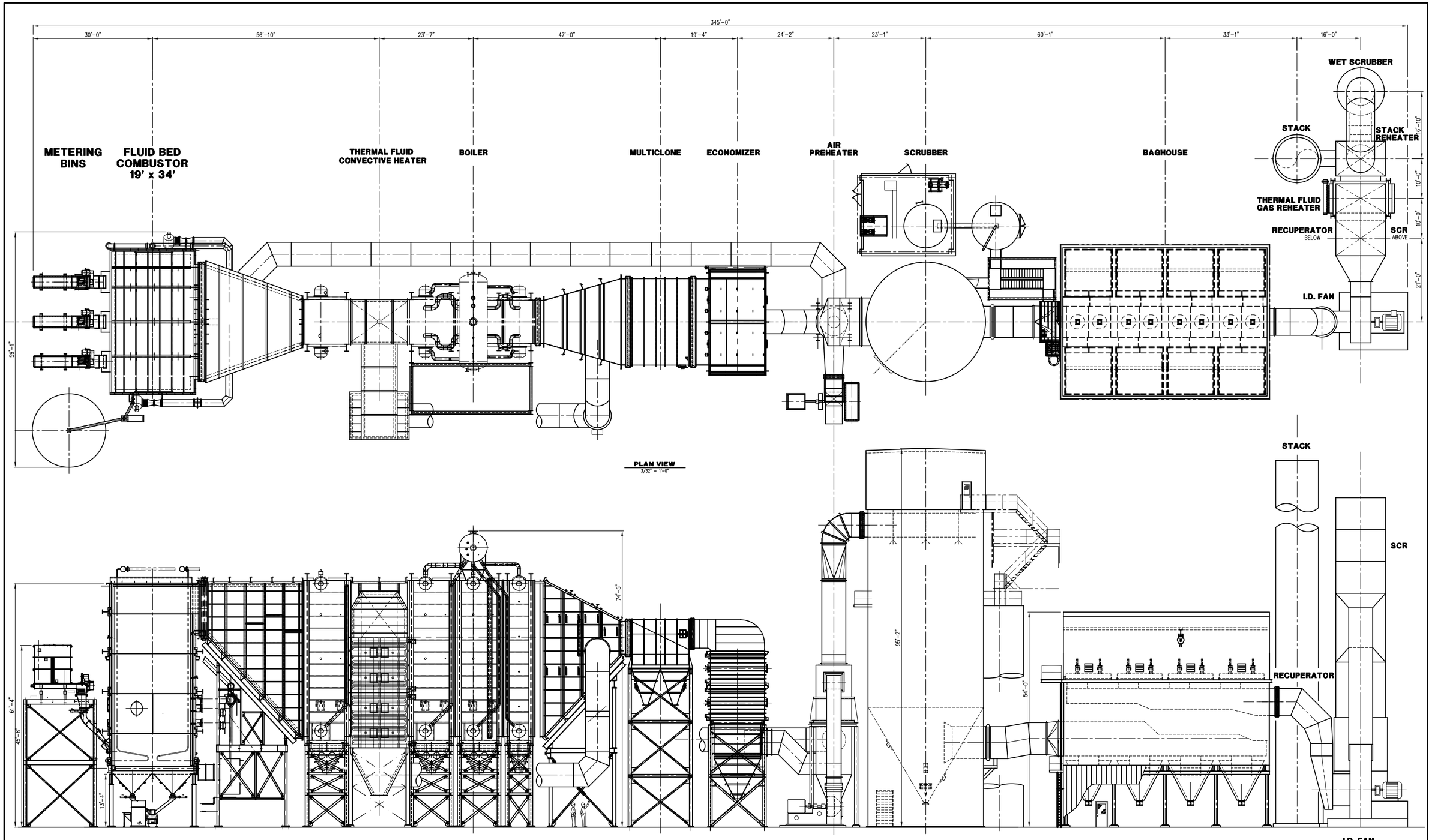

CONCEPTUAL ARRANGEMENT

EQUIPMENT SHOWN REPRESENTS
PRELIMINARY LAYOUT AND IS
SUBJECT TO CHANGE UPON FINAL DESIGN

1	ISSUED FOR REVIEW AND COMMENT ONLY				
△	DESCRIPTION	BY	DATE	CHK.	DATE
	REVISIONS				

FINAL APPROVAL		
PROJ. MGR.	DATE	
ROUTE	BY	DATE
DRAWN	CDG	9-05-08
CHECKED		
DESIGN ENG.		
CIVIL/STRUCT.		
PIPING/PROCESS		
I & C/ELECT.		
Q.A.		
PROJ. ENG.		

THIS DRAWING PROPERTY OF ENERGY PRODUCTS OF IDAHO
AND IS LOANED UPON THE CONDITION THAT IT IS TO BE RETURNED UPON REQUEST AND IS NOT TO BE REPRODUCED
OR COPIED OR USED IN ANY WAY DETRIMENTAL TO THE INTERESTS OF THE ABOVE COMPANY

EPI Energy Products of Idaho
4006 Industrial Ave. Coeur d'Alene, Idaho 83814
Idaho Energy Limited Partnership

GENERAL ARRANGEMENT
SPINNAKER – STEAM CYCLE
SAN JUAQUIN, CA

DRAWING CONTROL INDEX	PROJECT	CODE	SIZE	SHEET	REV No.
	1587	02030	D	1	2
SCALE NONE		TOTAL SHEETS 1			

SAVED: 10/02/08 11:38 am
CAD File: J:\1587\02030-01-2.DWG
J:\1587\02030-01-2.dwg, 10/2/2008 11:39:34 AM

HEAT AND ENERGY BALANCE

TURBINE KW GENERATED = 61,241.1KW
GENERATOR EFFICIENCY= 0.983
KW AT TERMINALS= 60,200.0KW
PARASITIC LOADS + XFORMER LOSSES + TRANS. LINE LOSSES= -6,800 KW

NET POWER TO PG&E GRID= 53,400 KW

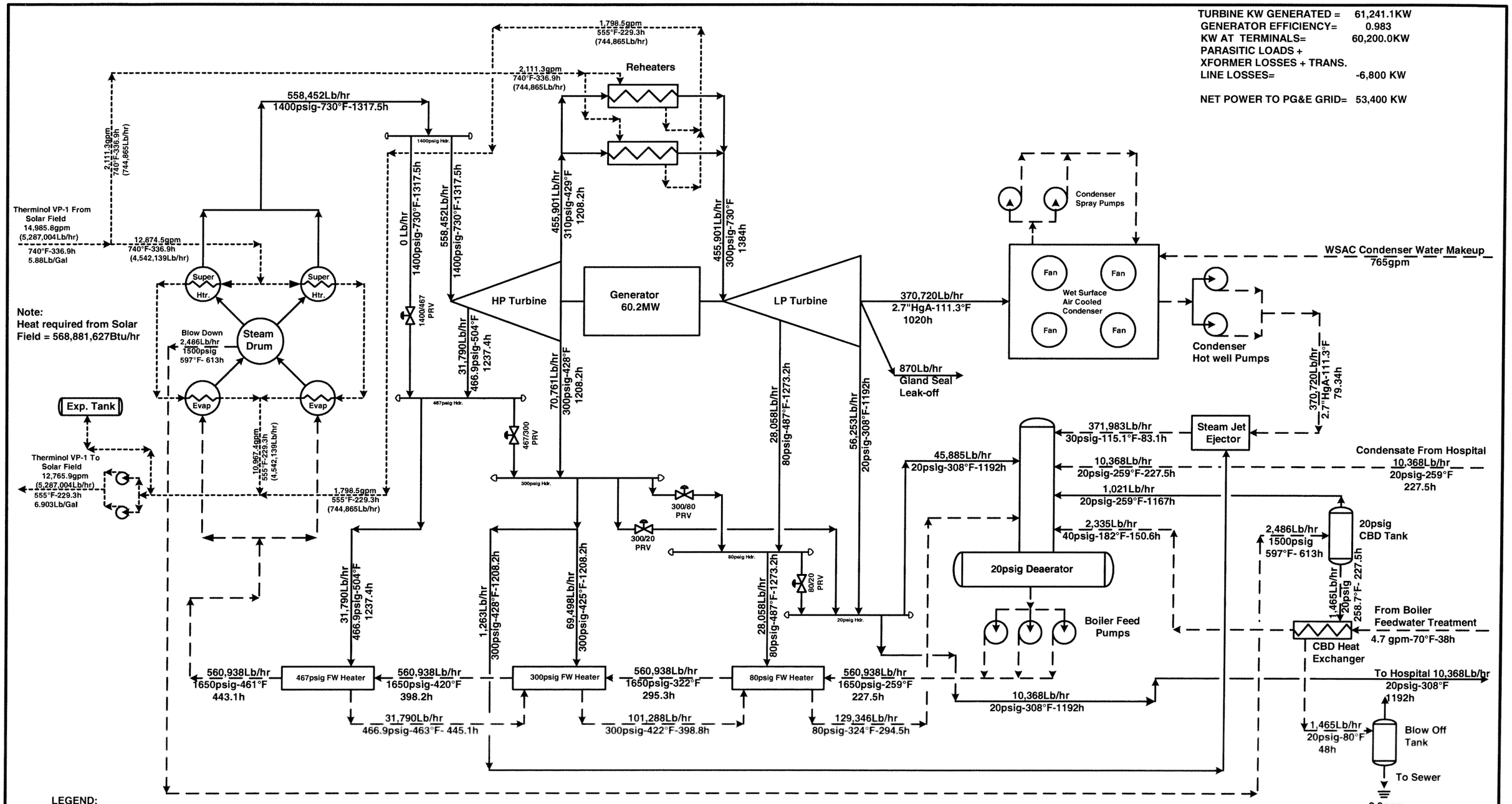

LEGEND:
1. Weight Flow = Lb/hr
2. Liquid Flow = gpm
3. Enthalpy = BTU/Lb = h
4. Pressure = psig
5. Vacuum = Inches Hg Absolute
6. Electric Power = MegaWatts= MW (or Kilowatts =KW)
7. Line Identification:
   a. Steam: ————————
   b. Condensate or Water: — — — — —
   c. Therminol VP-1: ----------

SPINNAKER San Joaquin I & II		Solar Steam Generation System
60.2 MW SOLAR STEAM GENERATION SYSTEM DAYTIME SOLAR OPERATING CONDITIONSUSING HOT OIL TO GENERATE STEAM WITH 10.4M 0F 20PSIG STEAM TO HOSPITAL HEAT EXCHANGER WITH WATER COOLED CONDENSER		
By: JTF Date: 8/4/08	FBD-5007-M-005-C	Rev: C Date: 8/20/08

SAVENAME: C:\DOCUMENTS AND SETTINGS\FOSTERJT\MY DOCUMENTS\SAN JOAQUIN I & II\HEAT BALANCE\FINAL HEAT BALANCES\FBD-5007-M-005C-1 DAYTIME 2F BFWHTRS 10.4M STM TO HOSP.SPINNAKER 60.2MW SOLAR STEAM BALANCE.VSD

SYSTEM: VISIO

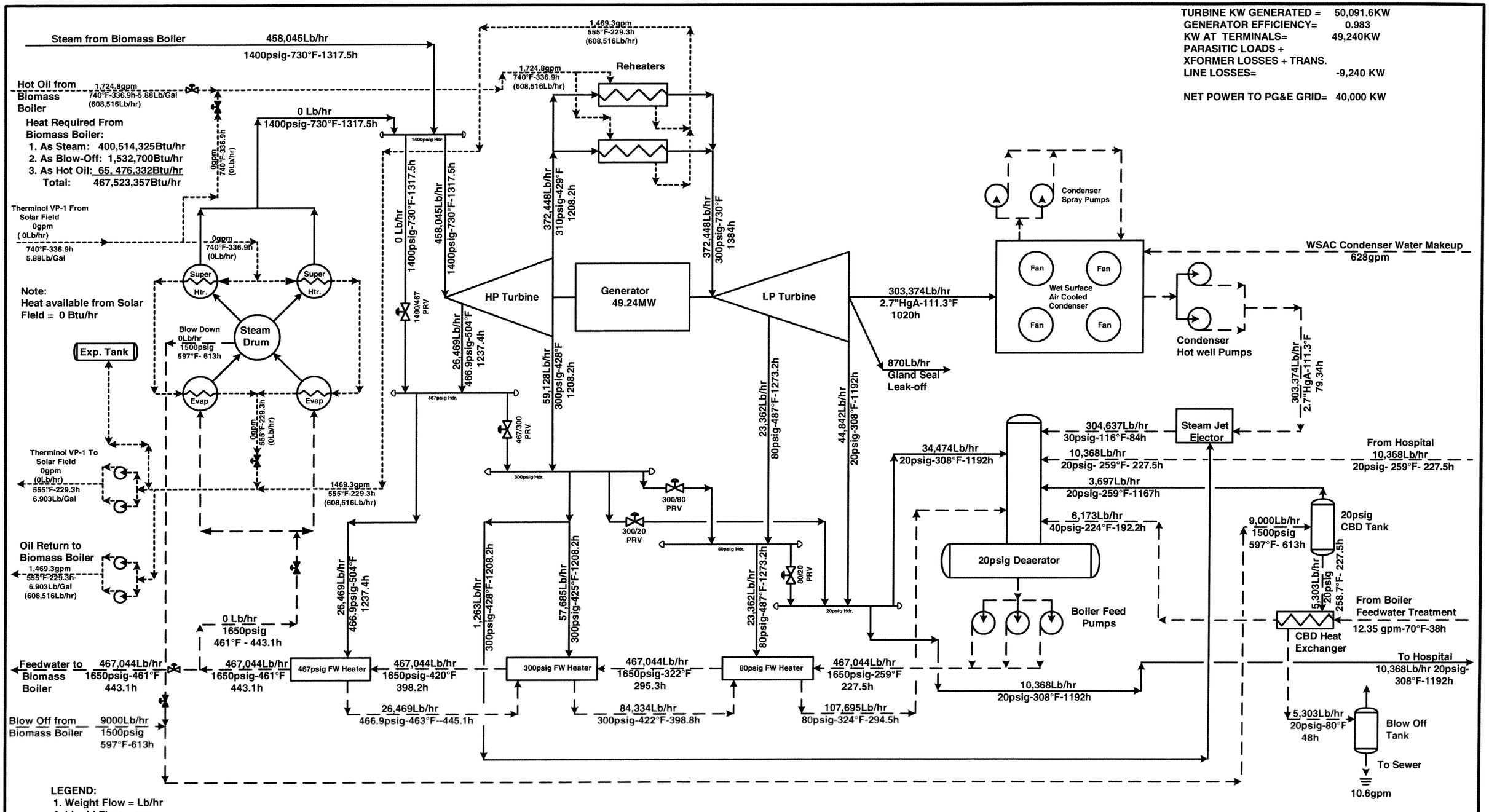

LEGEND:
1. Weight Flow = Lb/hr
2. Liquid Flow = gpm
3. Enthalpy = BTU/Lb = h
4. Pressure = psig
5. Vacuum = Inches Hg Absolute
6. Electric Power = MegaWatts= MW (or Kilowatts =KW)
7. Line Identification:
   a. Steam: ————————
   b. Condensate or Water: — — — — —
   c. Therminol VP-1: - - - - - - - - - -

SPINNAKER San Joaquin I & II	Solar Steam Generation System

49.24MW STEAM GENERATION SYSTEM

NIGHTTIME OPERATION WITH BIOMASS FOR STEAM GENERATION PLUS HOT OIL HEATING TO PRE-HEATERS AND 10.4M OF 20PSIG STEAM TO HOSPITAL HEAT EXCHANGER WITH WATER COOLED CONDENSER

By: JTF Date: 7/30/08	FBD-5007-M-004-C	Rev: C Date: 8/21/08

SAVENAME: I:\SPINNAKER\Z5007\PROCESS\HEAT BALANCES\8-28-08\FBD-5007-M-004C-1 NIGHTTIME HYBRID 2F BFWHTRS 10.4M TO HOSP SPINNAKER 49.24MW BIOMASS BOILERS BALANCE.VSD

SYSTEM: VISIO

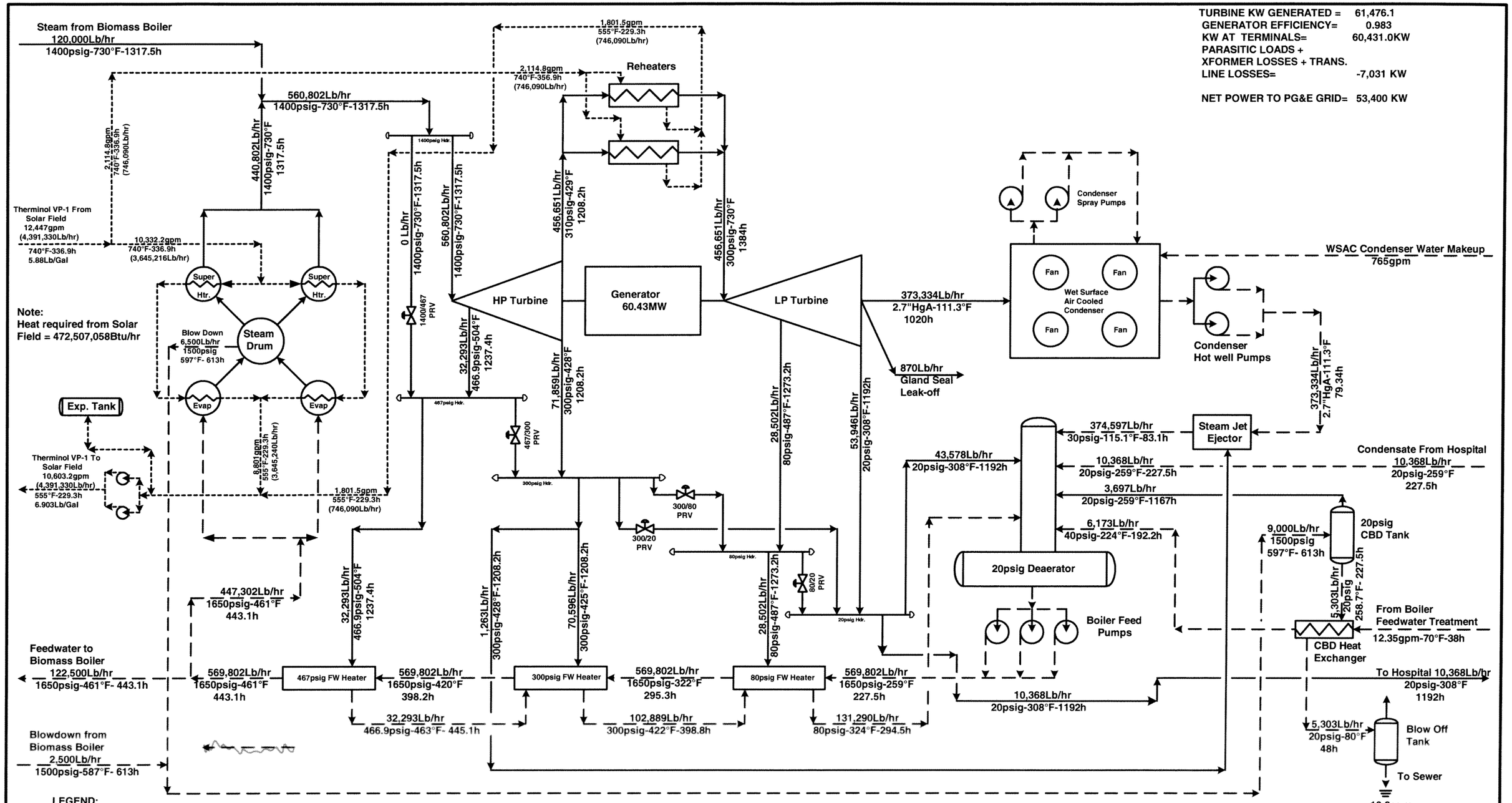

LEGEND:
1. Weight Flow = Lb/hr
2. Liquid Flow = gpm
3. Enthalpy = BTU/Lb = h
4. Pressure = psig
5. Vacuum = Inches Hg Absolute
6. Electric Power = MegaWatts= MW (or Kilowatts =KW)
7. Line Identification:
   a. Steam: ————————
   b. Condensate or Water: — — — — —
   c. Therminol VP-1: - - - - - - - - - - - - - - -

SPINNAKER San Joaquin I & II	Solar Steam Generation System

60.43 MW HYBRID SOLAR STEAM GENERATION SYSTEM

DAYTIME SOLAR OPERATING CONDITIONS USING HOT OIL FROM SOLAR FIELD AND BIOMASS BOILER TO GENERATE STEAM WITH 10.4M 0F 20PSIG STM TO HOSPITAL HEAT EXCHANGER WITH WATER COOLED CONDENSER

By: JTF Date: 8/4/08	FBD-5007-M-011-A	Rev: A Date: 9/16/08

SAVENAME: I:\SPINNAKER\Z5007\PROCESS\HEAT BALANCES\MACROS\FBD-5007-M-011A-1 HYBRID WET DAYTIME 2F BFWHTRS 10.4M STM TO HOSP.SPINNAKER 60.43MW SOLAR STEAM BALANCE.VSD

SYSTEM: VISIO

BIOMASS FUEL SUPPLY REVIEW

BIOMASS FUEL SUPPLY REVIEW FOR THE SAN JOAQUIN SOLAR I AND II PROJECTS

September 10, 2008

Prepared for:
Spinnaker Energy, Inc.
San Diego, California

Prepared by:
TSS Consultants
Rancho Cordova, California

Table of Contents

INTRODUCTION **5**

FINDINGS **5**

PHASE I WOOD FUEL SUPPLY AVAILABILITY REVIEW **6**

- **Wood Fuel Supply Study Area** **6**
- **Wood Waste Streams** **7**
- **Urban Sources** **8**
  - Urban Wood Waste Within the FSA 8
  - Urban Wood Waste Tributary to the FSA 8
  - Tree Trimmings Within the FSA 9
  - Tree Trimmings Tributary to the FSA 9
- **Agricultural Sources** **10**
  - Nut Crop Orchard Removals 10
  - Stone Fruit Orchard Removals 10
  - Citrus Orchard Removals 10
  - Orchard Prunings 11
  - Vineyard Removals 11
  - Nut Shells 11
  - Grape Pomace 12

DEMAND FOR WOOD FUEL **14**

- **Idle Biomass Plants Adjacent to the FSA** **15**
  - Madera Power 15
  - Chowchilla II and El Nido 16
- **Biomass Plants Within and Tributary to the FSA** **16**
  - Covanta Energy - Delano 17
  - Covanta Energy - Mendota 18
  - Rio Bravo - Fresno 18
  - Dinuba Energy 18
  - Sierra Power 18
- **Other Competing Uses for Biomass Material** **20**
  - Alternative Daily Cover 20
  - Mulch, Compost, Landscape Cover 21
  - Composite Panels 21
  - Cattle Feed 22
  - Other 22

FUEL AVAILABILITY **22**

- Urban Wood 22
- Orchard Removals 22
- Orchard Prunings 22
- Grape Pomace 23
- Cow Manure 23
- Transport and Processing Costs 23

FUEL PRICING **23**

FUTURE WOOD FUEL SUPPLY SOURCES AND RISKS 24
Orchard Removals per SB 705 24
ADC Policy 25
Rail Ties 25
APPENDIX A 26
APPENDIX B 27

List of Tables

Table 1 - Biomass Material Generated Within and Tributary to the San Joaquin FSA 6
Table 2 - Fuel Pricing by Fuel Type Within and Tributary to the San Joaquin FSA 6
Table 3 - Urban-Sourced Biomass Material Generated Within and Tributary to the FSA..... 8
Table 4 - Tree Trimming Material Generated Within and Tributary to the FSA 9
Table 5 - Agriculture-Sourced Biomass Material Within and Tributary to the FSA..... 12
Table 6 - Biomass Material Generated Within and Tributary to the FSA 13
Table 7 - Biomass Power Plants Accessing Biomass Fuel Generated Within and Tributary to the FSA 15
Table 8 - Biomass Plants Forecasted Fuel Demand Sourced From Within and Tributary to the FSA 20
Table 9 - Estimated Wood Waste Values for Fuel Delivered to the San Joaquin Projects 24

List of Figures

Figure 1 - San Joaquin Solar I and II Fuel Study Area 7
Figure 2 - Biomass Material Generated Within the FSA 13
Figure 3 - Total Biomass Material Generated Within and Tributary to the FSA 14
Figure 4 - Biomass Power Plants Located Within the FSA 17
Figure 5 - Biomass Power Plants Sourcing Fuel Within and Tributary to the FSA 19

INTRODUCTION

Spinnaker Energy, Inc. (Spinnaker) is developing a renewable energy facility sited near Coalinga, California. This unique facility will utilize two different renewable energy technologies that together will be configured as a hybrid solar-biomass renewable energy generating facility. Electricity generated at this site will be sold to a California Investor Owned Utility (IOU).

Spinnaker plans to scale the hybrid facility at approximately 53.4 megawatts (MW) of generation, of which 40 MW will be contributed from the biomass-fired portion for each project. As identical units, San Joaquin Solar I and II will have a combined generation output totaling 107 MW of which biomass could contribute as much as 80 MW. The biomass portion will require fuel that will be sourced from urban wood waste including tree trimmings, pallets, construction and demolition wood, and agricultural byproducts including orchard removals/prunings and cow manure from local feedlots. Total fuel/feedstock usage is projected at approximately 500,000 bone dry tons (BDT)[1] per year.

The availability of economical feedstocks at the volumes necessary to support the project is a key defining factor in the economical viability of any biomass power generation facility. Considerations such as delivery prices, supply risks from current demand, and competing uses are key metrics to address.

While the target development site is located strategically at Coalinga, Fresno County, California, the biomass-fired portion of the facility will likely access biomass feedstocks from throughout central California.

Spinnaker has retained TSS Consultants to conduct a Phase I wood fuel supply review for woody biomass fuel that could be available to sustain the San Joaquin Solar I and II projects (San Joaquin) at full commercial operation.

FINDINGS

As a result of this biomass fuel supply review, TSS found that woody biomass fuel material potentially available from within and tributary to the San Joaquin Fuel Study Area amounts to approximately 947,000 BDT per year. This volume of biomass fuel is sufficient to support an 80 megawatt (MW) power plant that utilizes 500,000 BDT of biomass fuel on an annual basis. Comparing the fuel volume potentially available with projected annual fuel usage results in a 1.9 fuel coverage ratio.

Table 1 summarizes total biomass material generated within the Fuel Study Area and from counties tributary to the San Joaquin projects.

[1]Bone dry ton (BDT) equals 2,000 pounds of wood fiber at zero percent moisture. BDT is a common unit of measure in the biomass power generation market sector.

Table 1 - Biomass Material Generated Within and Tributary to the San Joaquin FSA

Biomass Fuel Type	Total BDT
Urban Wood	1,043,043
Tree Trimmings	423,345
Nut Crop Orchard Removal	297,681
Stone Fruit Orchard Removal	98,653
Citrus Orchard Removal	43,954
Orchard Prunings	65,383
Nut Shells	103,746
Grape Pomace	35,772
Cow Manure	140,000
Total	**2,251,576**

While fuel volume available appears to exceed the annual fuel usage for the San Joaquin projects, the other critical factor to be considered is fuel pricing. Current biomass fuel pricing trends within and tributary to the Fuel Study Area vary by haul distance from the fuel sources. Table 2 provides an overview of current biomass fuel pricing trends by fuel type. Prices quoted are estimated $/BDT for fuel delivered to the San Joaquin projects.

Table 2 - Fuel Pricing by Fuel Type Within and Tributary to the San Joaquin FSA

Fuel Type	Estimated Price Range ($/BDT)
Urban Wood	$22 - $30
Tree Trimmings	$20 - $30
Nut Crop Orchard Removal	$27 - $35
Stone Fruit Orchard Removal	$27 - $35
Citrus Orchard Removal	$27 - $35
Orchard Prunings	$30 - $40
Nut Shells	$40 - $80
Grape Pomace	$23 - $28
Cow Manure	$22 - $30

PHASE I WOOD FUEL SUPPLY AVAILABILITY REVIEW

Wood Fuel Supply Study Area

The map in Figure 1 shows the Fuel Study Area (FSA) for the San Joaquin projects. This study area includes that geographic region located within a 75-mile radius of the Coalinga site. Note that while the FSA represents the geographic region most likely to provide economical woody biomass fuel to the San Joaquin Solar projects, additional woody biomass fuel, particularly urban wood waste from metropolitan areas located tributary to the FSA, including San Francisco, San Mateo, Santa Clara, Santa Cruz, Alameda, Contra Costa, and Sacramento counties, were also included in this wood fuel supply review.

Figure 1 - San Joaquin Solar I and II Fuel Study Area

Wood Waste Streams

In assessing the volumes of wood fuel potentially available for the San Joaquin projects within and tributary to the FSA, TSS considered two distinct sources:

- Urban-Sourced Fuels
  - Urban wood waste – construction/demolition wood, pallet, miscellaneous residential and commercial wood waste.
  - Tree trimmings – plant material generated from residential and commercial landscape maintenance activities.
- Agricultural-Sourced Fuels
  - Orchard removals – commercial crop trees removed as a result of crop replacement activities.
  - Orchard prunings – commercial crop trees are pruned annually to improve vigor and productivity.
  - Nut shells – annual processing of almond and walnut crops generates byproduct in the form of nut shells.
  - Grape pomace – annual processing of wine grapes generates grape seeds and skins.
  - Cow manure – provide waste diversion service for industrial cattle facilities to comply with Clean Water Act and other environmental legislation.

Urban Sources

Urban Wood Waste Within the FSA
Within the FSA resides an estimated population of approximately 1.8 million residents. [2] Based on TSS's experience with urban wood waste collection, approximately 11.5 pounds/capita of solid waste is generated daily with 10.5% of the waste stream made up of wood waste. Due to contamination with other building materials and the high cost of hand sorting, approximately 65% of this wood waste is economically recoverable. Using this data and recovery factors, calculations indicate that approximately 208,000 BDT[3] of urban wood waste are potentially available on an annual basis within the FSA.

Urban Wood Waste Tributary to the FSA
Urban wood waste generated at locations within major metropolitan areas tributary to the FSA was also calculated. Using the procedures described above and based on an estimated population of 7.3 million residents, [4] TSS estimates that approximately 835,000 BDT of urban wood waste are potentially available on an annual basis tributary to the FSA.

Table 3 summarizes urban wood waste estimates both within and tributary to the FSA.

Table 3 - Urban-Sourced Biomass Material Generated Within and Tributary to the FSA

County	2006 Population Within FSA	Urban Wood Waste (BDT) Within FSA
Fresno	535,054	61,313
Kern	195,029	22,349
Kings	146,153	16,748
Madera	65,855	7,546
Merced	98,263	11,260
Monterey	328,165	37,605
San Benito	47,466	5,439
San Luis Obispo	231,305	26,506
Tulare	167,964	19,247
Subtotal	***1,815,253***	***208,013***
County	**2006 Population Tributary to FSA**	**Urban Wood Waste (BDT) Tributary to FSA**
Alameda	1,457,426	167,009
Contra Costa	1,024,319	117,379
Sacramento	1,374,724	157,532
San Francisco	744,041	85,261
San Mateo	705,499	80,844
Santa Clara	1,731,281	198,391
Santa Cruz	249,705	28,614
Subtotal	***7,286,995***	***835,030***
Total	**9,102,248**	**1,043,043**

[2]Per data provided by the U.S. Census Bureau.
[3]Based on previous assessments in this region, TSS has converted the volumes of wood waste to a bone dry ton basis assuming that the average moisture content of the urban wood waste is 20%.
[4]Ibid.

Tree Trimmings Within the FSA
Working from previous studies performed by TSS, it is estimated that approximately 100 dry pounds of tree trimmings suitable for fuel is generated annually per capita. Based on a population of 1.8 million residents, approximately 90,750 BDT of tree trimmings are generated within the FSA. TSS assumes approximately 65% of this wood waste is actually recoverable as biomass fuel. Therefore, approximately 59,000 BDT of tree trimmings are available as wood fuel each year sourced from within the FSA.

Tree Trimmings Tributary to the FSA
Tree trimming estimates for material generated at locations within major metropolitan areas tributary to the FSA were also calculated. Using the procedures described above and based on an estimated population of 7.3 million residents, TSS estimates that approximately 364,350 BDT of tree trimmings suitable for wood fuel are potentially available on an annual basis tributary to the FSA.

Table 4 summarizes tree trimming material estimates both within and tributary to the FSA.

Table 4 - Tree Trimming Material Generated Within and Tributary to the FSA

County	2006 Population Within FSA	Tree Trimming Material (BDT) Within FSA
Fresno	535,054	17,389
Kern	195,029	6,338
Kings	146,153	4,750
Madera	65,855	2,140
Merced	98,263	3,194
Monterey	328,165	10,665
San Benito	47,466	1,543
San Luis Obispo	231,305	7,517
Tulare	167,964	5,459
Subtotal	***1,815,253***	***58,996***
County	**2006 Population Tributary to FSA**	**Tree Trimming Material (BDT) Within FSA**
Alameda	1,457,426	72,871
Contra Costa	1,024,319	51,216
Sacramento	1,374,724	68,736
San Francisco	744,041	37,202
San Mateo	705,499	35,275
Santa Clara	1,731,281	86,564
Santa Cruz	249,705	12,485
Subtotal	***7,286,995***	***364,350***
Total	**9,102,248**	**423,345**

Agricultural Sources

Nut Crop Orchard Removals
Within and tributary to the FSA, TSS utilized annual crop reports generated by County Agricultural Commissioners[5] to estimate that 206,720 acres of almonds and walnuts are harvested annually. Note that approximately 95% of the nut orchard crop is concentrated within the FSA. There is very little cultivation of nut orchards in the tributary counties. These nut crops have traditionally[6] had a replacement/removal rate of approximately 4% of total acres in cultivation per year. The typical removal volume for a mature almond or walnut orchard is around 36 BDT per acre. Based on these estimates, TSS has calculated that approximately 8,269 acres of nut orchards are available for removal on an annual basis. This results in approximately 297,680 BDT of nut orchard removals available each year within and tributary to the FSA.

The nut crops, particularly almond, are some of the most desirable species for agricultural air emissions offset fuel and as such may be in high demand for purchase by other biomass power plants attempting to meet agricultural offset fuel procurement requirements. The almond wood tends to be hard and generally produces a good quality fuel when processed, whereas walnut wood tends to produce fuel with some process handling challenges, i.e., a more stringy and generally dusty fuel.

Stone Fruit Orchard Removals
Based on county crop report estimates, approximately 54,800 acres of fruit orchards are currently in production within and tributary to the FSA. Over 90% of the stone fruit orchards are situated within the FSA, with very little cultivation of fruit orchards in the tributary counties. The stone fruit market has not been as strong as the nut orchard markets and consequently there has been an accelerated removal rate for several fruit varieties including apricots, peaches and cherries. In addition, removal and replacement of the stone fruit orchards tends to be every eight to ten years due to changes in varieties (as consumer preferences change) and superior genetic stock for new orchards is developed. TSS estimated the removal rates for these orchards at 10% of cultivated crop per year. Fruit orchards tend to generate less volume of usable biomass fuel than the nut orchard removal operations as fruit trees tend to be smaller. TSS estimates that approximately 18 BDT per acre are produced from fruit orchard removals. This results in approximately 98,650 BDT of fruit orchard removals available each year. Unlike the nut orchards, fruit trees tend to be softer and produce a slightly stringier fuel.

Citrus Orchard Removals
Currently there are approximately 61,050 acres of citrus fruit in cultivation within the FSA. County crop reports indicate that there are no commercial-scale citrus crops in the tributary counties. Citrus fruit orchard removals have traditionally generated less desirable fuel due to challenges associated with processing and have not been targeted as a biomass fuel source. However, with the Senate Bill 705 (see Appendix B) burn ban for citrus orchards, there is much

[5]2006 Fresno County Crop Report, 2007 Kern County Crop Report, 2007 Kings County Crop Report, 2006 Madera County Crop Report, 2007 Merced County Crop Report, 2007 Monterey County Crop Report, 2006 San Benito County Crop Report, 2007 San Luis Obispo County Crop Report, 2007 Tulare County Crop Report, 2006 Alameda County Crop Report, 2007 Contra Costa County Crop Report, 2006 Sacramento County Crop Report, 2005 San Francisco City & County Crop Report, 2006 San Mateo County Crop Report, 2007 Santa Clara County Crop Report, 2006 Santa Cruz County Crop Report.
[6]Per interviews with commercial-scale orchard removal contractors.

material available and orchard owners are motivated to have it removed rather than pile and burn on site. In addition, the agricultural wood processing contractors have found that allowing the citrus orchard removal material to dry for six to eight weeks after extraction from the ground facilitates processing of a superior grade fuel that is less stringy (easier to manage at the biomass plant). Citrus orchards are being removed at an accelerated rate as orchards mature or dated varieties (e.g., Valencia, navel) are being replaced with more valued varieties. Current removal rates for citrus orchards are about 4%. Average volume of biomass fuel recovered is 18 BDT per acre. Approximately 43,955 BDT of biomass fuel are generated per year within the FSA.

Orchard Prunings

In addition to orchard removals, orchard prunings are also available annually from commercial orchard processing operations. While the average volume of prunings varies by type of orchard, TSS has estimated that on average, approximately 0.5 BDT per acre are generated as orchards are pruned each year. County crop reports[7] indicate that approximately 261,530 acres of orchards are now in cultivation within and tributary to the FSA. Annual pruning activities on these orchards could produce approximately 130,800 BDT of pruning material per year. At present, there are a limited number of operators actively engaged in orchard pruning collection and processing. The low volumes per acre and the specialized processing equipment required tend to make this fuel relatively expensive to produce. In addition, because of the physical characteristic of the prunings, this fuel tends to be stringy and can be difficult to process. TSS has estimated that 50% of this volume, approximately 65,380 BDT per year, could be reasonably available as fuel within the FSA.

Vineyard Removals

Presently only a limited volume of vineyard removals are processed as fuel. Vineyards are problematic as a fuel source for a number of reasons, including wire trellising, metal grape stakes and the presence of pressure-treated wooden grape stakes. The current practice of open field burning vineyard removal material will continue to be available as a viable disposal method for vineyard managers until June, 2010. Provisions in 2003 California Senate Bill 705 stipulate that open burning of vineyard removals and orchard removals/prunings be discontinued. After June 2010, new and innovative techniques will need to address these removals. Vineyard removals may provide a source of low-cost fuel; however, the quality of this fuel tends to be poor with high ash and dirt. For this reason, TSS has not included vineyard removals or vineyard prunings as viable available fuel in this analysis.

Nut Shells

In addition to orchard removals and prunings, nut shells are also generated from commercial agricultural operations annually from within the FSA. TSS utilized the 2004 California Energy Commission's report, An Assessment of Biomass Resources in California, to estimate the total nut shells produced annually within the FSA. TSS estimates there are approximately 103,750 BDT of almond and walnut shells generated annually within and tributary to the FSA. Approximately 95% of this volume is generated within the FSA.

[7] Ibid, page 10.

Grape Pomace
TSS determined the amount of wine grape pomace (grape seeds and skin) generated and available as fuel within the FSA utilizing the county crop reports[8] which assess the tons of wine grapes produced within the area. In addition, TSS contacted the University of California at Davis Viticulture Department to secure an estimate of the pomace in relation to total grape crush. Based upon this information, it is estimated that approximately 20% of the grape (by weight) is available as pomace after the crush. This can be broken down into 5% seeds and 15% skins and other residue. Using these recovery figures, approximately 35,770 BDT of wine grape pomace are generated each year from within and tributary to the FSA.

Cow Manure
Two commercial-scale cattle feedlots are located within easy haul distance (less than 20 miles) of the San Joaquin projects. The Harris Ranch Feeding Company feedlot generates approximately 180,000 green tons of manure annually and the Coalinga Feedyard, Inc., generates approximately 20,000 green tons annually. Interviews with feedlot managers[9] indicate that after one year of drying (on site at the feedlots), the moisture content is reduced to about 30%. At 30% moisture, the 200,000 green tons convert to about 140,000 BDT. Fuel testing results as provided by Harris Ranch indicate that cow manure, after one year of drying, has 58% ash and 4,061 MMBtu[10] (both measured on a dry basis).

The current market for cow manure in the Coalinga area is for use as soil amendment on commercial agriculture operations. The State of California is concerned about air emissions (volatile organic compounds) from cow manure stockpiles and may require that manure piles be covered with tarps as an emissions mitigation measure.

Table 5 provides a summary of the agriculture-sourced biomass material potentially available within the FSA.

Table 5 - Agriculture-Sourced Biomass Material Within and Tributary to the FSA

Agriculture Source	Total BDT
Nut Crop Orchard Removal	297,681
Stone Fruit Orchard Removal	98,653
Citrus Orchard Removal	43,954
Orchard Prunings	65,383
Nut Shells	103,746
Grape Pomace	35,772
Cow Manure	140,000
Total	**785,188**

Summarized in Table 6 are estimates of biomass material generated within and tributary to the FSA and potentially available as woody biomass fuel.

[8]Ibid, page 10.
[9]Jon Tarr, Commodity Manager, Harris Ranch Feeding Company, and Jim Anderson, Owner, Coalinga Feedyard, Inc.
[10]Million British thermal units measured on a high heating value basis.

Table 6 - Biomass Material Generated Within and Tributary to the FSA

Biomass Fuel Type	Total BDT
Urban Wood	1,043,043
Tree Trimmings	423,345
Nut Crop Orchard Removal	297,681
Stone Fruit Orchard Removal	98,653
Citrus Orchard Removal	43,954
Orchard Prunings	65,383
Nut Shells	103,746
Grape Pomace	35,772
Cow Manure	140,000
Total	**2,251,576**

Figure 2 below provides a summary of biomass material generated within the FSA.

Figure 2 - Biomass Material Generated within the FSA

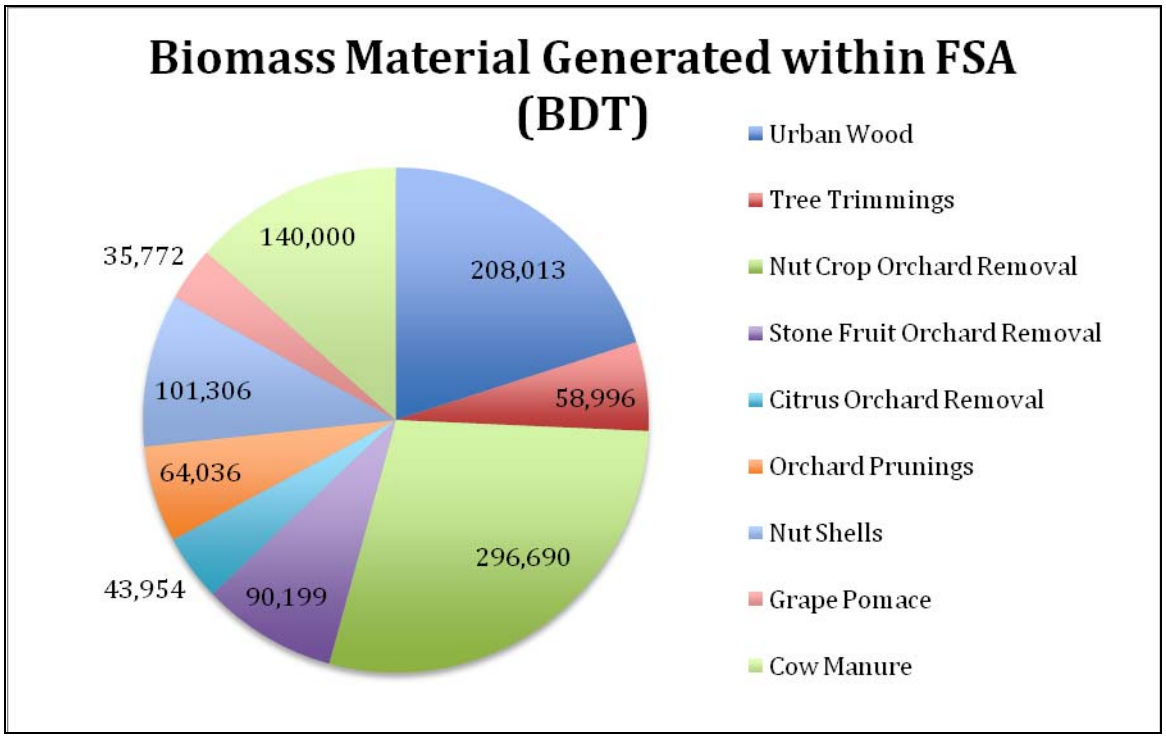

Figure 3 below provides a summary of biomass material potentially available from within and tributary to the FSA.

Figure 3 - Total Biomass Material Generated within and Tributary to the FSA

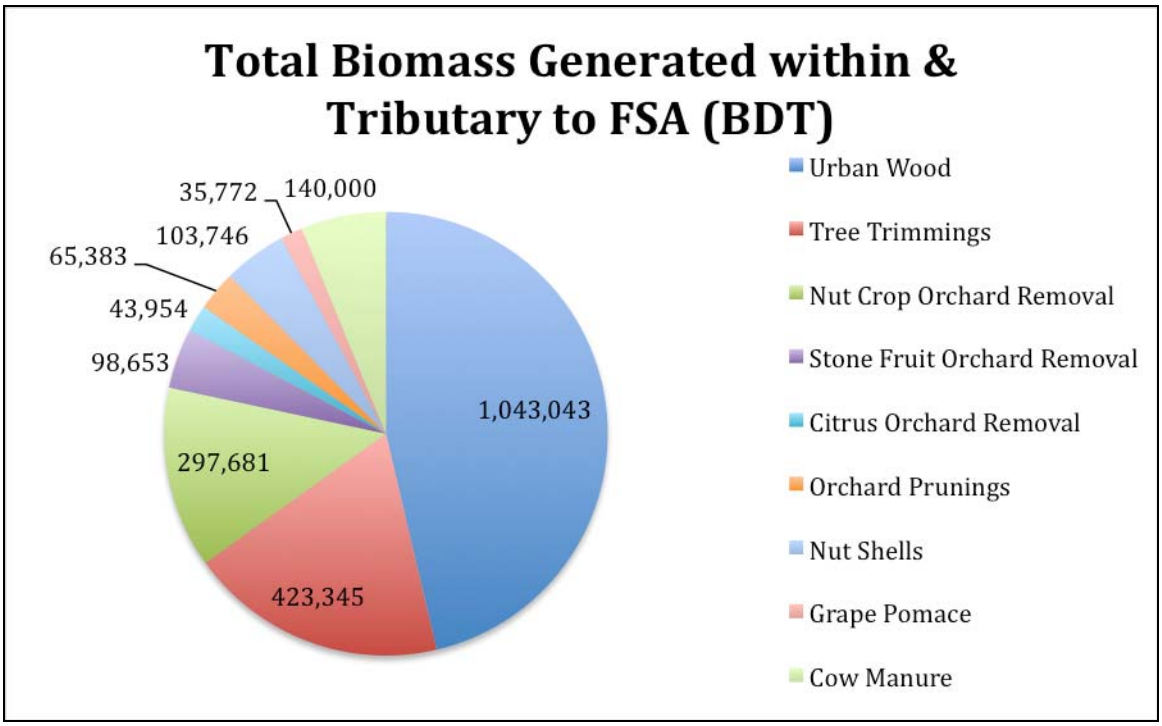

DEMAND FOR WOOD FUEL

In the course of this analysis TSS found that a number of biomass power generation facilities are currently accessing wood fuel from the FSA and from the region tributary to the FSA. Table 7 provides a matrix highlighting biomass power generation facilities that are accessing fuel generated within and adjacent to the FSA. This matrix also includes an estimate of the volume of fuel utilized by these facilities by fuel type.

Table 7 - Biomass Power Plants Accessing Biomass Fuel Generated Within and Tributary to the FSA

Facility	Type	MW (Net)	Fuel BDT	Urban BDT	Ag BDT	Other BDT
Covanta - Delano	BFB[11]	50	350,000	110,000	240,000	0
Sierra Power	Stoker	9.5	76,000	61,000	0	15,000
Dinuba Energy	Stoker	11.5	90,000	62,000	28,000	0
Rio Bravo - Fresno	CFB[12]	25	195,000	103,500	80,000	11,500
Madera Power*	BFB	25	200,000	120,000	60,000	20,000
Covanta - Mendota	CFB	25	190,000	114,000	57,000	19,000
Chowchilla II*	BFB	10	80,000	48,000	24,000	8,000
El Nido*	BFB	10	80,000	38,000	24,000	18,000
Covanta - Chinese Station	BFB	22	160,000	94,000	50,000	16,000
Tracy Biomass	Stoker	21	155,000	93,000	37,000	25,000
Rio Bravo - Rocklin	CFB	25	180,000	175,000	0	5,000
SPI[13] - Lincoln	Stoker	18	145,000	0	50,000	95,000
SPI - Standard	Stoker	8	65,000	5,000	20,000	40,000
SPI - Loyalton	Stoker	20	100,000	50,000	10,000	40,000
Woodland Biomass	CFB	25	180,000	130,000	45,000	5,000
TOTAL		**285**	**2,246,000**	**1,203,500**	**725,000**	**317,500**

* These facilities are not currently in commercial operation.

Idle Biomass Plants Adjacent to the FSA

Note that the Table 7 matrix includes biomass plants that are not currently in commercial operation but are likely to be in service during calendar year 2008 or 2009. These facilities are:

- Madera Power
- Chowchilla II
- El Nido

Madera Power
Madera Power experienced a catastrophic turbine failure on June 6, 2007. This facility has been under repair for some time. The plant is expected to be back in commercial operation during the third or fourth quarter of 2008. The Fresno Bee featured an article regarding this turbine failure which is provided in Appendix A. Discussions with fuel suppliers in the Central Valley region

[11]Bubbling Fluidized Bed.
[12]Circulating Fluidized Bed.
[13]Sierra Pacific Industries.

indicate that the fuel procurement manager[14] for this facility is making inquiries and may begin procuring fuel soon. Madera Power is owned by Community Recycling which also owns Dinuba Energy.

Chowchilla II and El Nido
Formerly owned and operated by San Joaquin Valley Energy Partners, the currently idle Chowchilla II and El Nido facilities have recently been purchased and are rumored to be now owned by a partnership known as Global Ampersand.[15] North American Energy Services (NAES) is apparently contracted to provide Operating and Maintenance services. Commencing in May, 2007 the NAES website posted announcements seeking operations staff for the Chowchilla facility. Prior to commencement of commercial operations, the El Nido facility will require significant investment, as the plant was extensively damaged due to vandalism and unauthorized salvage of copper wiring. Bill Lax, formerly with CAPCO and San Joaquin Valley Energy Partners, is now contacting potential fuel suppliers regarding fuel availability for these facilities. The Ampersand Energy Partners, LLC website notes that both El Nido and Chowchilla are expected to be operational in the summer of 2008. Discussions with Central Valley area fuel buyers and fuel suppliers indicate that the Chowchilla facility is in start up and should be in full commercial operations soon. The El Nido facility is currently producing steam; however, no projections are available regarding when commercial operations will begin.

Biomass Plants Within and Tributary to the FSA

A total of 15 biomass power plants currently or soon will be procuring biomass fuel generated within and tributary to the FSA. Of these 15 facilities, there are five biomass power plants in commercial operation located within the San Joaquin FSA:

- Covanta Energy - Delano
- Covanta Energy - Mendota
- Dinuba Energy
- Rio Bravo - Fresno
- Sierra Power (co-located with Sierra Forest Products)

The combined net power generation capacity of these five plants is 121 MW with annual fuel usage estimated at 586,000 BDT. Figure 4 highlights the location of these facilities relative to the San Joaquin facility. These five plants represent the primary competition for biomass fuel in the San Joaquin FSA.

[14]John Richardson, Vice President, Madera Power, LLC.
[15]Per fuel procurement staff operating in the San Joaquin Valley.

Figure 4 - Biomass Power Plants Located Within the FSA

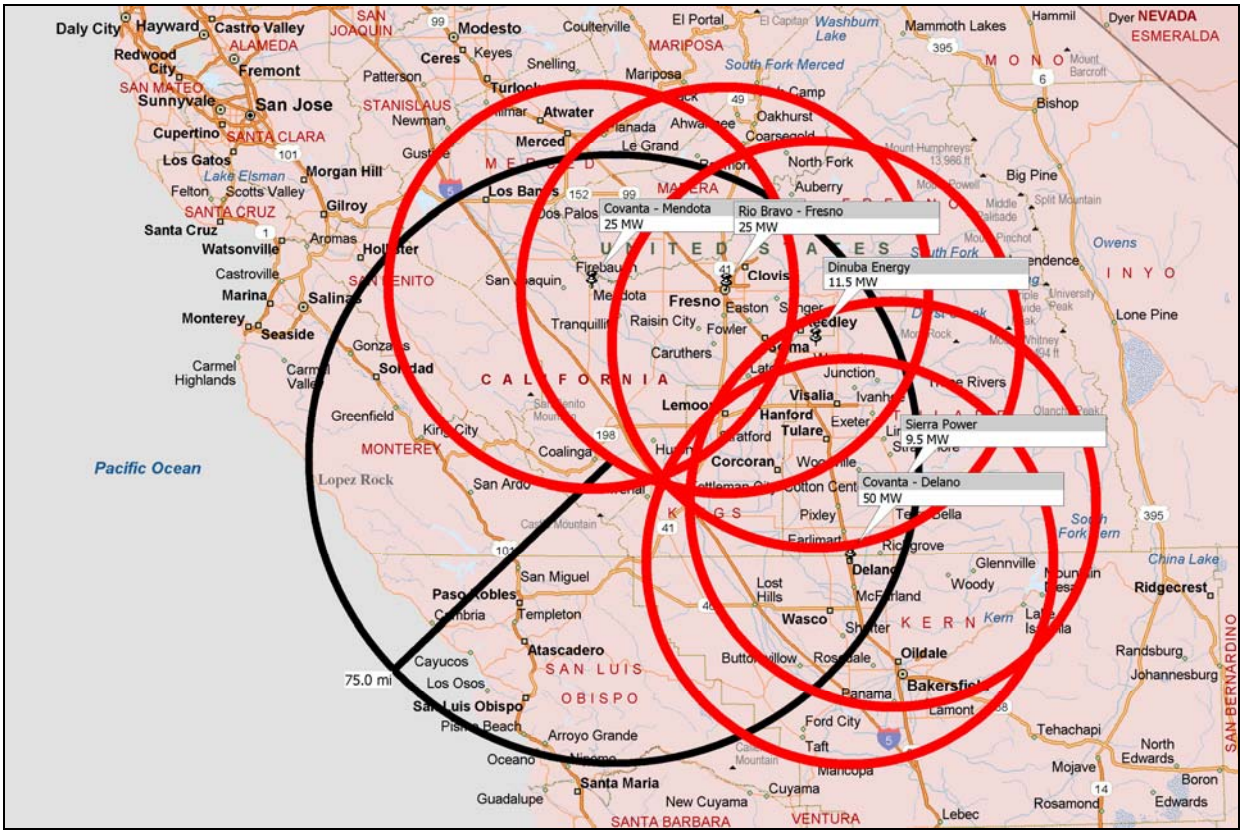

Covanta Energy - Delano

Originally developed by Thermo Ecotek in two phases, Delano commenced commercial operations for phase I in 1991 and phase II in 1993. This biomass plant was acquired by Covanta Energy in 2007 and is expected to continue to operate for the foreseeable future. In late 2007 and early 2008, Covanta invested almost $20 million dollars in repairs and upgrades to the combustor units. This facility is currently purchasing almost 100% agricultural fuels, primarily orchard removal material. Covanta Energy owns five other biomass power generation facilities within California:

- Burney Mountain Power
- Mt. Lassen Power
- Pacific Oroville Power
- Pacific Ultrapower - Chinese Station
- Covanta - Mendota

In addition to purchasing the AES Delano and AES Mendota assets, Covanta also purchased Central Valley Fuels Management Inc (CVFM). CVFM is the fuel procurement contractor for seven biomass power generation facilities in California. Note more on CVFM later in this report.

Covanta Energy - Mendota
Originally developed by Thermo Ecotek, this facility is a sister plant to the Woodland Biomass plant. Commercial operations commenced in 1990. Both are scaled at 25 MW and utilize Gotaverken circulating fluidized bed (CFB) combustors. As mentioned above, Covanta Energy purchased this facility in 2007. The CFB boiler has been able to accommodate local fuels (primarily urban) quite well. The facility has had a good operating record.

Rio Bravo - Fresno
Originally developed by Ultrasystems, Inc. this facility is now owned by Malaga Power Investors and Constellation Energy. This facility began commercial operations in 1989. The facility recently had a major overhaul, with much of the combustor being rebuilt. For the last three years both Rio Bravo Rocklin and Rio Bravo Fresno have utilized the services of the Central Valley Fuel Management (CVFM) organization to procure fuel. Recently both facilities have hired fuel procurement managers and are no longer affiliated with CVFM.

Dinuba Energy
This facility was originally developed by Yanke Energy and began commercial operations in 1986. Currently owned and operated by Community Renewable Energy Services, this facility is located on a former sawmill site. Community Recycling, a major urban wood processing enterprise, owns both the Dinuba and Madera facilities. Much of the urban wood processed at its Bakersfield area yard and Sun Valley facility is transported to the Dinuba and Madera facilities. Like the Rio Bravo facilities, CVFM had been procuring fuel for these facilities. Currently Dinuba and Madera are purchasing their own fuel.

Sierra Power
Owned and operated by Sierra Forest Products (SFP), Sierra Power is providing thermal energy for lumber drying kilns on site at SFP as well as producing power. Commercial operations commenced in 1986. Discussions with the owners of SFP[16] indicate that up to 20% of Sierra Power's fuel is provided as sawdust and chips from the SFP sawmill. Currently most of Sierra Power's fuel is urban wood sourced Ventura and Los Angeles Counties.

Figure 5 highlights the locations of biomass plants sourcing fuel from within and tributary to the FSA.

[16]Kent Duysen, General Manager, Sierra Forest Products

Figure 5 - Biomass Power Plants Sourcing Fuel Within and Tributary to the FSA

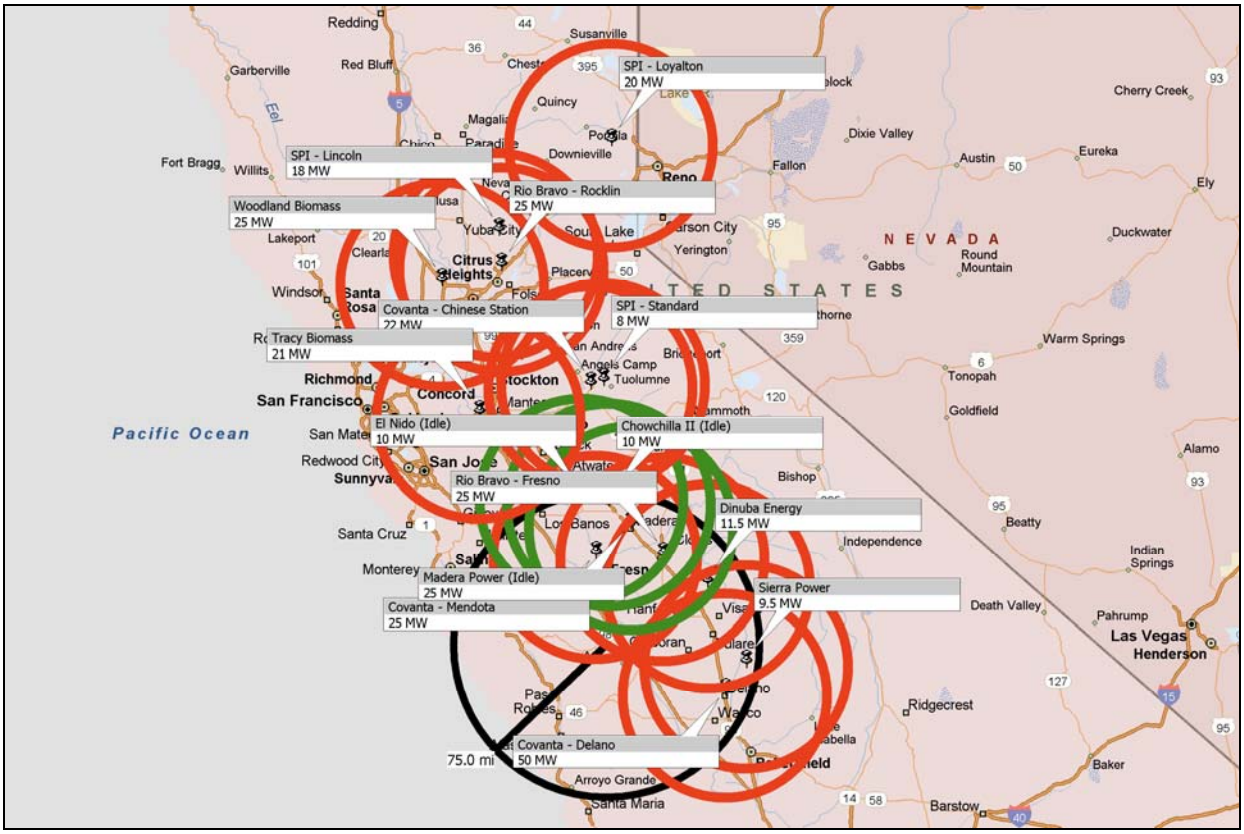

The competing plants are portrayed in Figures 4 and 5 with fuel procurement zones scaled at 50 miles (radius). Note that plants that are not currently operational are highlighted in green. The San Joaquin projects fuel study zone is highlighted in black.

The 15 existing biomass power generation facilities are a significant competitive force in the marketplace. In total these facilities are currently utilizing about 2,246,000 BDT of biomass fuel annually. Through interviews with a variety of biomass fuel supply contractors and fuel procurement managers, TSS estimates that almost 60% of the fuel sourced for these 15 plants is generated within and tributary to the FSA. Table 8 provides an estimate of fuel sourced by facility within and tributary to the FSA.

Table 8 - Biomass Plants Forecasted Fuel Demand Sourced From Within and Tributary to the FSA

Facility	Annual Fuel Usage BDT	Percent of Fuel Sourced From Within and Tributary to the FSA	Fuel Volume Purchased From Within and Tributary to the FSA BDT
Covanta - Delano	350,000	70%	245,000
Sierra Power	76,000	30%	22,800
Dinuba Energy	90,000	35%	31,500
Rio Bravo - Fresno	195,000	85%	165,750
Madera Power	200,000	70%	140,000
Covanta - Mendota	190,000	90%	171,000
Chowchilla II	80,000	65%	52,000
El Nido	80,000	70%	56,000
Covanta - Chinese Station	160,000	40%	64,000
Tracy Biomass	155,000	65%	100,750
Rio Bravo - Rocklin	180,000	50%	90,000
Woodland Biomass	180,000	60%	108,000
SPI - Lincoln	145,000	10%	14,500
SPI - Standard	65,000	5%	3,250
SPI - Loyalton	100,000	40%	40,000
TOTAL	**2,246,000**		**1,304,550**

Other Competing Uses for Biomass Material

In addition to biomass fuel, wood waste generated within and tributary to the FSA has numerous alternative uses. Due to inconsistent biomass fuel prices and increasing processing and transportation costs, many wood recyclers have diversified into other higher-valued markets. Such markets include mulch, compost and alternative daily cover and in recent years, as particleboard and composite panel furnish.

Alternative Daily Cover

In addition to the aforementioned fuel markets, another alternative use for wood waste within and tributary to the FSA is as Alternative Daily Cover (ADC) at landfills. Landfills in California are required to cover landfill waste daily with some type of inert material. For many landfills, processed wood waste is the option of choice. The California Integrated Waste Management Board reports that up to 1.2 million tons of ADC was applied in Southern California landfills in 2005. The practice of utilizing wood waste as ADC is not likely to change due to the fact that municipalities receive diversion credits[17] for this material as if it were recycled, thus meeting the requirements of Assembly Bill 939. At some future date there may be an opportunity to lobby the state legislature to change this provision and thereby create an incentive for the landfills to

[17]Per State Assembly Bill 939.

seek alternative utilization opportunities (e.g., biomass fuel) rather than the current practice of wood waste disposal as ADC.

Mulch, Compost, Landscape Cover

Alternative markets are also being developed for urban wood waste generated within the region located to the south of the FSA. Interviews with several urban wood processors indicated that in an effort to seek out more stable markets for their product, there has been a concerted effort to merchandize the more "blonde" wood into commercial nurseries as an alternative to potting soils. Several large commercial-scale urban wood processors are double grinding the lighter color or "blonde" wood for use as an alternative soil mix for plant nurseries seeking to replace heavier soil mixes. Replacement of the heavier soil mixes with the lighter and fine ground wood waste facilitates shipment of more planting stock per truckload due to reduced weight of the blonde wood as potting mix. One of the major urban wood processors located in San Bernardino County is currently developing a compost and soil amendment enterprise targeting retail sales of products generated from the processing of wood waste generated within the county.

More local to the FSA and as reported by a representative of Wilson Ag,[18] there appears to be plans formulating for a commercial-scale compost facility on the west side of Kings County. According to Wilson Ag, West Lake Farms has plans to develop a commercial compost-producing facility within two years, utilizing orchard removal and pruning material as the primary feedstock.

Commercial compost yards are finding expanding markets as commercial fertilizer prices have climbed in recent months along with the cost of fossil fuels. Commercial agriculture operations are seeking low-cost alternative soil amendment/fertilization options including the application of compost/mulch products.

Urban wood waste is also an excellent raw material for landscape cover in decorative or erosion control applications. Pallet wood or clean demolition wood waste can be processed and "colorized" for use in decorative applications in commercial and residential developments. Processed wood waste is also utilized roadside to mitigate the potential for soil erosion. Now that housing markets are depressed and residential development has stalled, demand for landscape cover and soil amendments is soft.

Composite Panels

Currently there are two composite panel manufacturing facilities in California: Sierra Pine at Rocklin and Sierra Pine at Martell. In recent years the Sierra Pine medium density fiberboard (MDF) plant at Martell, California, has installed a new manufacturing system which will allow the company to utilize urban wood waste. This development could have an impact on wood fuel supply markets located in that region to the north of the FSA. It is anticipated that once the housing markets stabilize and/or rebound, Sierra Pine will procure some of the same wood waste that has traditionally been sold as biomass fuel.

[18]As reported by Harley Phillips, Operations Manager, Wilson Ag.

Cattle Feed
As the demand for corn has ramped up in the last five years as a feedstock for ethanol, so too have the prices that farmers are able to secure for this now valued commodity. Cattle ranchers and feedlot operators have had to seek out alternatives to the high-priced corn which once served as a stable feed source. Relatively low-valued agricultural byproducts such as grape pomace are now being blended into cattle feed as an extender. This practice will likely continue for some time as corn prices are not likely to abate anytime soon.

Other
Other current uses and disposal methods for woody biomass material include:

- Tree trimmings – firewood
- Orchard removals – firewood
- Orchard prunings – soil conditioner within the orchards

FUEL AVAILABILITY

A number of factors impact fuel availability. While the Demand for Wood Fuel section of this report characterized market demand and emerging alternative uses, this report section seeks to describe some of the short-term external factors that are currently impacting biomass fuel supplies. It should be noted that these same short-term external factors may become recurring issues over time and have a significant impact on fuel availability.

Urban Wood
As the housing markets have softened, housing starts have dropped and so has the volume of construction and demolition wood. Some urban wood processors have reported reduced deliveries of wood waste.

Orchard Removals
Current plans for commercial orchard removals may be impacted (less available) due to relatively high nut prices to growers. High commodity prices for nuts tend to cause growers to delay removal of producing orchard crops. Once removed, newly planted nut orchards require several years (4-7) to achieve commercial-scale nut production. Current commodity pricing is not having an impact on orchard removals.

In addition, a large number of orchard removals occurred prior to implementation of California Senate Bill 705 statutes (see Appendix B). Growers considering orchard removal may have elected to perform removal prior to implementation of burning restrictions in effect June 2007 to limit exposure to future service acreage fee increases (fees paid to orchard removal contractors to perform removal services).

Orchard Prunings
Orchard prunings have limited availability at this time due to a lack of processing equipment (primarily down the row collection equipment). In addition, the areas with cultivated acres of orchards within the FSA tend to experience rain during the pruning season, which makes

collection and processing problematic. In some locations, orchard prunings are being processed and utilized for orchard floor conditioning by farming operations.

Grape Pomace
Grape pomace has special handling considerations and combustion characteristics that can make it difficult to handle in large quantities, and it is likely that the San Joaquin projects would only be able to utilize relatively small quantities. Storing pomace on site can be challenging due to odor and insect issues.

Cow Manure
As noted earlier in this report, cow manure is a relatively low-quality fuel with high ash content and low heating value. This potential fuel source is produced locally at two commercial-scale feedlots and transport costs are relatively low. Combined with the fact that current market value for cow manure is quite low, this potential fuel source is likely to be the lowest cost alternative for the San Joaquin projects. Cow manure, if blended carefully with other fuel, could be an opportunity fuel for the San Joaquin projects.

Transport and Processing Costs
Increased transport and production costs limit the ability to compete with higher end markets and long-distance supply sources, especially of higher moisture content fuel such as tree trimmings. Higher transport and production costs are largely driven by an increase in the price of diesel fuel. In addition, dairy closures in Southern California have translated to a substantial loss of urban fuel volumes supplied from Southern California into Central California. For a number of years, biomass fuel procurement managers could rely on a relatively stable volume of dairy feed material being transported by truck from Tulare and Kern counties to Southern California dairies. This “front” haul allowed for a ready backhaul of urban wood to biomass power plants located in the southern San Joaquin Valley, or replaced by round-trip hauls at higher cost.

FUEL PRICING

Biomass fuel pricing within and tributary to the FSA is currently fairly stable. A number of variables have contributed to this over time including the fact that one fuel procurement organization, Central Valley Fuels Management, has been retained to procure fuel for most of the biomass plants in Central California. This organization is owned by Covanta Energy and since 2003 has served 11 biomass power generation facilities. CVFM functions, with minor exceptions, as a sole-source supplier to its clients and as a monopsony (one buyer and many sellers) in the biomass fuel marketplace. Its knowledge of clients’ requirements and unfettered access to fuel suppliers allow CVFM to procure biomass relatively efficiently although, in the absence of a competitive market, that efficiency has not been tested. CVFM buys fuel on what is essentially a fixed-price-plus-transportation basis, establishing a base price throughout the Valley for each fuel type. It works with approximately 160 to 200 fuel suppliers that range from family sole proprietors to very large corporate waste management and agribusiness entities. From discussions with biomass fuel suppliers, it appears that most supply agreements carry terms of one year or less.

The monopsony status of CVFM is changing, however, as four of its former clients have decided to procure fuel on their own:

- Rio Bravo - Rocklin
- Rio Bravo - Fresno
- Madera Power
- Dinuba Energy

This change in the fuel marketplace occurred in recent months and it is not clear how or if these new fuel procurement organizations will have an immediate impact on fuel pricing in the region.

An important consideration for the San Joaquin projects is fuel transportation logistics. There are backhaul options along major transportation routes (Interstate Highway 5 and State Highway 99) which provide opportunities to move biomass fuel at attractive rates. Transportation costs are a major consideration (and cost center) when accessing biomass fuel. The location of the San Joaquin projects adjacent to Interstate 5 may provide significant transport advantages.

In consideration of these issues as well as the existing competition for biomass fuel, TSS has developed the following fuel price estimates. Table 9 provides a range of fuel prices for biomass fuel delivered to the San Joaquin projects.

Table 9 - Estimated Wood Waste Values for Fuel Delivered to the San Joaquin Projects

Fuel Type	Estimated Price Range ($/BDT)
Urban Wood	$22 - $30
Tree Trimmings	$20 - $30
Nut Crop Orchard Removal	$27 - $35
Stone Fruit Orchard Removal	$27 - $35
Citrus Orchard Removal	$27 - $35
Orchard Prunings	$30 - $40
Nut Shells	$40 - $80
Grape Pomace	$23 - $28
Cow Manure	$22 - $30

FUTURE WOOD FUEL SUPPLY SOURCES AND RISKS

Orchard Removals per SB 705

Much speculation has revolved around the ban on agricultural burning as a result of California Senate Bill 705 (SB 705). This bill amends the California Health and Safety Code (CH&SC) and requires the San Joaquin Valley Unified Air Pollution Control District to ban the open burning of waste produced by commercial agricultural operations. Under the terms of the ban, all orchard removal materials are to be banned from open burning commencing June 1, 2007 and other materials, such as vineyard removals and prunings from surface-harvested crops, by June 1, 2010. It was anticipated that such a burn ban would provide additional fuel to biomass power plants. However, based on this analysis, TSS believes that only a slight increase in potential

orchard removal fuel volume will result. In addition, it is too early to assume that SB 705 will automatically lead to an increased volume of biomass fuel and decreased prices for such fuel as orchard growers are pressured to pay more for orchard removal services since removal (as opposed to piling and burning) is the only reasonable disposal option.

It should be noted that the CH&SC allows the Air Districts to postpone burn prohibition commencement dates under certain conditions. One such condition is the determination by the District that there is no economically feasible alternative for eliminating the waste. A case in point is the amendment proposed by the District to postpone the June 1, 2007, commencement date of the burn prohibition for citrus orchard removals until June 1, 2010. While this ruling (and amendment) did not materialize, it does provide an indication that Air Districts will seriously consider issuing burn ban amendments if economical alternatives are not available to the growers. After discussions with industry experts, air quality engineers and others familiar with this ruling, TSS believes that any attempt by the biomass power plants to leverage use of SB 705 to increase service acre fees of orchard removals to the growers (resulting in cheaper biomass fuel) will be met with similar postponement actions.

ADC Policy

Large volumes of urban wood and green waste are used as ADC at Southern California landfills. This is primarily because the State of California allows the counties to count 100% of ADC as diversion credit for meeting State-mandated recycling levels. Therefore, every ton of wood waste which is used for ADC is considered recycled. Considering the quality control requirements necessary to produce biomass fuel versus the production of ADC, it is not surprising that significant amounts of wood wastes are disposed of as ADC. There have been various legislative efforts in the past to ban the use of wood waste and green waste for ADC. However, none of the state legislative initiatives have proved successful. TSS believes that within the next three to five years, there is a strong possibility that legislation reducing the use of wood waste and green waste for ADC will be enacted in California. Such legislation would lead to increased amounts of wood waste and green waste entering the marketplace. TSS estimates that only about 30% of this ADC volume would be suitable for biomass fuel with the bulk going into the compost and mulch markets. However, legislation as noted could substantially increase the amount of biomass fuel within the State of California.

Rail Ties

Although this study has focused on the more traditional woody biomass fuels, there may be some opportunities to utilize other fuels with fewer market outlets and therefore lower costs. Used rail ties are not currently utilized by the biomass power plants now procuring fuel in Central and Southern California. Used ties are typically a disposal issue for the railroads and may be an economical fuel for the San Joaquin projects.

APPENDIX A

BIOMASS PLANT EXPLODES, NO INJURIES

The Fresno Bee

06/07/07 11:23:14

An explosion and fire caused an estimated $20 million in damage Wednesday night at Madera Power, a biomass plant just east of Firebaugh, Madera County Fire Department officials reported.

Three employees were in the plant when the explosion occurred shortly after 8:30 p.m., but no one was injured, said Mark De Castro, plant engineer.

De Castro said it was too early to say when the plant would be able to reopen.

The plant utilizes fuels consisting of almond tree cuttings, rice straw, wheat straw, cotton stalks, and urban/demolition waste to produce electricity. It had been shut down May 31 for maintenance, De Castro said.

The plant went back on line about 5 p.m. Wednesday, he said.

At about 8:30 p.m., he said, the power went out for reasons yet to be determined.

Lisa Anderson, a battalion chief with the Madera County Fire Department, said the power outage caused a giant turbine to run to over speed, causing the generator to fail, explode and start a fire.

The turbine was in the ground floor of a three-story building, with the generator in second floor.

The explosion ripped a hole through the third floor, Anderson said. It took firefighters about an hour to put out the fire, she said.

APPENDIX B

California Senate Bill No. 705

Senate Bill No. 705
CHAPTER 481
An act to add Sections 41855.5 and 41855.6 to the Health and Safety Code, relating to air quality.
[Approved by Governor September 22, 2003. Filed with Secretary of State September 22, 2003.]
LEGISLATIVE COUNSEL'S DIGEST
SB 705, Florez. Air quality: agricultural burning: San Joaquin Valley Unified Air Pollution Control District.
(1) Existing law prohibits any person from knowingly setting or permitting agricultural burning unless he or she has a valid permit designated by the State Air Resources Board to issue a permit in the area where the burning is to take place. Existing law requires the state board to designate public fire protection agencies or other equivalent agencies to issue permits, and to adopt rules and regulations to provide a procedure for the issuance of those permits.
This bill would prohibit the issuance of any permit to a person to burn certain categories of agricultural waste, as defined, within the jurisdiction of the San Joaquin Valley Unified Air Pollution Control District, commencing on the date specified for each category, except that the bill would authorize the district to postpone those dates under certain circumstances. The bill also would require the district to develop and adopt, by June 1, 2005, rules establishing the best management practices for certain other weeds and maintenance, as defined, and would require those rules to become operative by June 1, 2006. The bill would require the district to develop and adopt rules to regulate the burning of diseased crops. The bill would prescribe the circumstances under which a conditional crop burning permit would be authorized to be issued.
The additional duties of the bill for the district would impose a state-mandated local program.
(2) Existing law makes a violation of any rule, regulation, or order of the state board or a district a misdemeanor.
By expanding the scope of a crime, this bill would impose a state-mandated local program.
(3) This bill would make findings and declarations regarding the inapplicability of a general statute within the meaning of Section 16 of the California Constitution.
(4) The California Constitution requires the state to reimburse local agencies and school districts for certain costs mandated by the state.
Ch. 481 **—2—**
90
Statutory provisions establish procedures for making that reimbursement.
This bill would provide that no reimbursement is required by this act for specified reasons.
The people of the State of California do enact as follows:

SECTION 1. Section 41855.5 is added to the Health and Safety Code, to read:
41855.5. (a) Notwithstanding any other provision of law, no permit may be issued to a person to burn any of the following categories of agricultural waste within the jurisdiction of the San Joaquin Valley Unified Air Pollution Control District, commencing on the following dates:
(1) Commencing June 1, 2005, for field crops, prunings, and weed abatement.
(2) Commencing June 1, 2007, for orchard removals.
(3) Commencing June 1, 2010, for other materials, vineyard removals, and surface harvested prunings.
(b) The San Joaquin Valley Unified Air Pollution Control District, in consultation with the University of California Cooperative Extension, shall develop and adopt, not later than June 1, 2005, rules establishing best management practices for the control of other weeds and maintenance. The rules adopted pursuant to this subdivision shall be operative not later than June 1, 2006.
(c) For the purposes of this section, the following terms have the following meanings:
(1) ‘‘Field crops’’ means any of the following crops:
(A) Alfalfa.
(B) Asparagus.
(C) Barley stubble.
(D) Beans.
(E) Corn.
(F) Cotton.
(G) Flower straw.
(H) Hay.
(I) Lemon grass.
(J) Oat stubble.
(K) Other field crops, as determined by the state board.
(L) Pea vines.
(M) Peanuts.
(N) Rice stubble.
(O) Safflower.
Ch. 481 **—3—**
90
(P) Sugar cane.
(Q) Vegetable crops.
(R) Wheat stubble.
(2) ‘‘Orchard removals’’ includes, but is not limited to, any of the following:
(A) Orchard removal matter.
(B) Stumps.
(C) Untreated sticks.
(3) ‘‘Other materials’’ includes, but is not limited to, any of the following:
(A) Brooder paper.
(B) Deceased goats.
(C) Diseased bee hives.

(4) ‘‘Other weeds and maintenance’’ includes, but is not limited to, any of the following:
(A) Ditch bank work.
(B) Canal bank work.
(C) Dodder weed.
(D) Star thistle.
(E) Tumbleweed.
(F) Noxious weeds.
(G) Pesticide sacks.
(H) Fertilizer sacks.
(5) ‘‘Prunings’’ means prunings from any of the following:
(A) Apple crops.
(B) Apricot crops.
(C) Avocado crops.
(D) Bushberry crops.
(E) Cherry crops.
(F) Christmas trees.
(G) Citrus crops.
(H) Date crops.
(I) Eucalyptus crops.
(J) Fig crops.
(K) Kiwi crops.
(L) Nectarine crops.
(M) Nursery prunings.
(N) Olive crops.
(O) Other prunings, as determined by the state board.
(P) Pasture or corral trees.
(Q) Peach crops.
(R) Pear crops.
(S) Persimmon crops.
Ch. 481 **—4—**
90
(T) Pistachio crops.
(U) Plum crops.
(V) Pluot crops.
(W) Pomegranate crops.
(X) Prune crops.
(Y) Quince crops.
(Z) Rose prunings.
(6) ‘‘Surface harvested prunings’’ includes, but is not limited to, any of the following:
(A) Almond prunings.
(B) Walnut prunings.
(C) Pecan prunings.
(D) Grape vines.
(E) Vineyard removal materials.
(7) ‘‘Vineyard materials’’ includes, but is not limited to, any of the following:
(A) Grape canes.
(B) Raisin trays.
(8) ‘‘Weed abatement’’ includes, but is not limited to, any of the

following:
(A) Berms.
(B) Bermuda grass.
(C) Fence rows.
(D) Grass.
(E) Pasture.
(F) Ponding or levee banks.
(d) (1) The San Joaquin Valley Unified Air Pollution Control District shall develop and adopt, by January 1, 2005, rules to regulate the burning of diseased crops. The rules shall become operative no later than June 1, 2005. The rules shall provide for the issuance of a conditional crop burning permit if all of the following criteria are met:
(A) The fields to be burned are specifically described.
(B) The applicant has not been cited for a violation of burning rules or regulations in the past 3 years, unless the violation was of a de minimis nature, as determined by the district and the county agricultural commissioner.
(C) The county agricultural commissioner has determined all of the following:
(i) During the growing season for that crop, there is the presence of a disease that will cause a substantial, quantifiable reduction in yield or poses a threat to the health of adjacent vines, trees, or plants in the field proposed to be burned, during the current or next growing season.
Ch. 481 **—5—**
90
(ii) There is no economically feasible alternative means of eliminating the disease other than burning.
(2) A conditional crop burning permit shall authorize the burning of only the identified diseased crop.
(3) The holder of a permit may not transfer, sell, or trade the permit to any other individual.
(4) A citation for a violation of burning rules or regulations may be appealed to the San Joaquin Air Pollution Control District Hearing Board.
SEC. 2. Section 41855.6 is added to the Health and Safety Code, to read:
41855.6. The district may postpone the commencement dates set forth in subdivision (a) of Section 41855.5 for any category of agricultural waste or crop described if all of the following applies:
(a) The district determines that there is no economically feasible alternative means of eliminating the waste.
(b) The district determines that there is no long-term federal or state funding commitment for the continued operation of biomass facilities in the San Joaquin Valley or development of alternatives to burning.
(c) The district determines that the continued issuance of permits for that specific category or crop will not cause, or substantially contribute to, a violation of an applicable federal ambient air quality standard.
(d) The State Air Resources Board concurs with the district's determinations pursuant to this section.
SEC. 3. The Legislature finds and declares that, due to the unique circumstances applicable to agricultural waste and its impacts on air

quality in the San Joaquin Valley, a statute of general applicability cannot be enacted within the meaning of subdivision (b) of Section 16 of Article IV of the California Constitution.

SEC. 4. No reimbursement is required by this act pursuant to Section 6 of Article XIII B of the California Constitution for certain costs that may be incurred by a local agency or school district because in that regard this act creates a new crime or infraction, eliminates a crime or infraction, or changes the penalty for a crime or infraction, within the meaning of Section 17556 of the Government Code, or changes the definition of a crime within the meaning of Section 6 of Article XIII B of the California Constitution.

In addition, no reimbursement is required by this act pursuant to Section 6 of Article XIII B of the California Constitution for certain other costs that may be incurred by a local agency or school district because a local agency or school district has the authority to levy service charges, fees, or assessments sufficient to pay for the program or level of service mandated by this act, within the meaning of Section 17556 of the Government Code.

LARGE GENERATOR INTERCONNECTION STUDY AGREEMENT

THE PROJECT WAS FORMERLY KNOWN AS BETHEL 7&8 UNDER PREVIOUS OWNERSHIP

Elizabeth Ingram

From: Fishback, Edward [EFishback@caiso.com]
Sent: Wednesday, November 12, 2008 5:20 PM
To: Elizabeth Ingram; Kent A. Larsen
Cc: Wright, Linda; RJLz@pge.com; Chen,Kaicheng; Yazzolino, Ray
Subject: FW: Executed Study Process Agreement

Elizabeth and Kent,
All requirements for the Bethel 7&8 Solar Hybrid Project have been fulfilled for the project to be included in the Transition Cluster.

Ed Fishback
Project Manager
California ISO
151 Blue Ravine Road
Folsom, CA 95630
Phone (916) 608-5836
Cell (916) 802-6401
Fax (916) 351-2264

From: Louie, Ryan (ET) [mailto:RJLz@PGE.COM]
Sent: Wednesday, November 12, 2008 1:58 PM
To: Fishback, Edward
Subject: RE: Executed Study Process Agreement

Ed,

The technical information is complete.

Ryan

From: Fishback, Edward [mailto:EFishback@caiso.com]
Sent: Wednesday, November 12, 2008 11:31 AM
To: Louie, Ryan (ET)
Subject: FW: Executed Study Process Agreement
Importance: High

Ryan,
Please confirm the technical data complete for the Bethel 7&8 Solar Hybrid Project.

Ed Fishback
Project Manager
California ISO
151 Blue Ravine Road
Folsom, CA 95630
Phone (916) 608-5836
Cell (916) 802-6401
Fax (916) 351-2264

From: Elizabeth Ingram [mailto:Elizabeth.Ingram@spinnakerenergy.net]
Sent: Tuesday, November 11, 2008 7:13 AM

To: Fishback, Edward
Cc: Kent A. Larsen
Subject: FW: Executed Study Process Agreement
Importance: High

Ed,

Can you please confirm that our project (Bethel 7&8 Solar Hybrid Project) has fulfilled all of the requirements to be included in the Transition Cluster?

Thanks,

Elizabeth Ingram | Business Development | Spinnaker Energy, Inc.
12555 High Bluff Drive Suite 100 San Diego CA 92130 | T 858.427.6536 F 858.513.1205

This email and any files transmitted with it are confidential and intended solely for the use of the individual or entity to whom they are addressed. If you have received this email in error please notify the sender. Please note that any views or opinions presented in this email are solely those of the author and do not necessarily represent those of the company. Finally, the recipient should check this email and any attachments for the presence of viruses. The company accepts no liability for any damage caused by any virus transmitted by this email.

Please consider the environment before printing this email.

From: Wright, Linda [LWright@caiso.com]
Sent: Friday, November 07, 2008 3:01 PM
To: Elizabeth Ingram
Cc: Kent A. Larsen; Fishback, Edward
Subject: RE: Executed Study Process Agreement

Elizabeth –

The wire transfer for $220,000 was received today, November 7, 2008. The executed agreement was received on October 30, 2008. Ed Fishback will send you an email confirming your technical data is complete, and welcoming you to the Transition Cluster.

Final cluster project information for the Transition Cluster is unavailable as the deadline is still looming.

Thanks,

LW

Linda Wright
Project Specialist
California ISO
916/351-4470

From: Elizabeth Ingram [mailto:Elizabeth.Ingram@spinnakerenergy.net]
Sent: Friday, November 07, 2008 12:07 PM
To: Wright, Linda
Cc: Kent A. Larsen
Subject: RE: Executed Study Process Agreement

Linda,

The $220,000 wire to CAISO to pay the remaining study deposit for the Bethel 7&8 Solar Hybrid Project was transmitted today. Could you please confirm receipt of that wire amount and confirm that we have satisfied all requirements to be included in the Transition Cluster?

LARGE GENERATOR INTERCONNECTION STUDY PROCESS AGREEMENT

THIS AGREEMENT is made and entered into this 24th day of October, 2008 by and between Martifer Renewables Solar Thermal LLC, a limited liability company organized and existing under the laws of the State of Delaware, ("Interconnection Customer,") and the California Independent System Operator Corporation, a California nonprofit public benefit corporation existing under the laws of the State of California, ("CAISO"). The Interconnection Customer and the CAISO each may be referred to as a "Party," or collectively as the "Parties."

RECITALS

WHEREAS, the Interconnection Customer is proposing to develop a Large Generating Facility or generating capacity addition to an existing Generating Facility consistent with the Interconnection Request submitted by the Interconnection Customer dated December 11, 2007; and

WHEREAS, the Interconnection Customer desires to interconnect the Large Generating Facility with the CAISO Controlled Grid; and

WHEREAS, the Interconnection Customer has requested the CAISO to conduct or cause to be performed Interconnection Studies to assess the system impact of interconnecting the Large Generating Facility to the CAISO Controlled Grid and to specify and estimate the cost of the equipment, engineering, procurement and construction work needed on the Participating TO's electric system in accordance with Good Utility Practice to physically and electrically connect the Large Generating Facility to the CAISO Controlled Grid;

NOW, THEREFORE, in consideration of and subject to the mutual covenants contained herein the Parties agree as follows:

1.0 When used in this Agreement, with initial capitalization, the terms specified shall have the meanings indicated in the CAISO's FERC-approved Large Generation Interconnection Procedures in CAISO Tariff Appendix GG ("LGIP") or the Master Definitions Supplement, Appendix A to the CAISO Tariff, as applicable.

2.0 The Interconnection Customer elects and the CAISO shall conduct or cause to be performed Interconnection Studies, including any accelerated Interconnection Study, consistent with the LGIP in accordance with the CAISO Tariff.

3.0 The scope of the Interconnection Studies shall be subject to the assumptions set forth in Appendices A and B to this Agreement.

4.0 The Interconnection Studies will be based upon the technical information provided by the Interconnection Customer in the Interconnection Request, as may be modified as the result of the Scoping Meeting, subject to any modifications in accordance with Section 6.7.2 of the LGIP and modifications to the proposed Commercial Operation Date of the Large Generating Facility permitted by the LGIP. The CAISO reserves the right to request additional technical information from the Interconnection Customer as may reasonably become necessary consistent with Good Utility Practice during the course of the

Interconnection Studies. If the Interconnection Customer modifies its designated Point of Interconnection, Interconnection Request, or the technical information provided therein is modified, the Interconnection Studies may be modified as specified in the LGIP.

5.0 The Interconnection Study report for each Interconnection Study shall provide the information specified in the LGIP.

6.0 The Interconnection Customer shall provide an Interconnection Study Deposit, a Site Exclusivity Deposit, if applicable, and other Interconnection Financial Security for the performance of the Interconnection Studies in accordance with the provisions of Sections 3.5.1 and 9 of the LGIP.

Following the issuance of an Interconnection Study report, the CAISO shall charge and the Interconnection Customer shall pay its share of the actual costs of the Interconnection Study pursuant to Sections 3.5.1 and 7.8 of the LGIP.

Any difference between the deposits made toward the Interconnection Study process and associated administrative costs, including any accelerated studies, and the actual cost of the Interconnection Studies and associated administrative costs shall be paid by or refunded to the Interconnection Customer, in the appropriate allocation, in accordance with Section 3.5.1 of the LGIP.

7.0 Pursuant to Section 3.7 of the LGIP, the CAISO will coordinate the conduct of any studies required to determine the impact of the Interconnection Request on Affected Systems. The CAISO may provide a copy of the Phase I Interconnection Study results to an Affected System Operator and the Western Electricity Coordinating Council. Requests for review and input from Affected System Operators or the Western Electricity Coordinating Council may arrive at any time prior to interconnection.

8.0 Substantial portions of technical data and assumptions used to perform the Phase I Interconnection Study, such as system conditions, existing and planned generation, and unit modeling, may change after the CAISO provides the Interconnection Study results to the Interconnection Customer. Interconnection Study results will reflect available data at the time the CAISO provides the Phase I Interconnection Study report to the Interconnection Customer. The CAISO shall not be responsible for any additional costs, including, without limitation, costs of new or additional facilities, system upgrades, or schedule changes, that may be incurred by the Interconnection Customer as a result of changes in such data and assumptions.

9.0 **[NOT USED]**

10.0 The CAISO shall maintain records and accounts of all costs incurred in performing the Interconnection Study in sufficient detail to allow verification of all costs incurred, including associated overheads. The Interconnection Customer shall have the right, upon reasonable notice, within a reasonable time at the CAISO's offices and at its own expense, to audit the CAISO's records as necessary and as appropriate in order to verify costs incurred by the CAISO. Any audit requested by the Interconnection Customer shall be completed, and

written notice of any audit dispute provided to the CAISO representative, within one hundred eighty (180) calendar days following receipt by the Interconnection Customer of the CAISO's notification of the final costs of the Interconnection Study.

11.0 In accordance with Section 3.8 of the LGIP, the Interconnection Customer may withdraw its Interconnection Request at any time by written notice to the CAISO. Upon receipt of such notice, this Agreement shall terminate, subject to the requirements of Section 3.5.1 and 13.1 of the LGIP.

12.0 Pursuant to Section 4 of the LGIP, this Agreement shall become effective upon the date the fully executed Agreement is received by the CAISO. If the CAISO does not receive the fully executed Agreement and deposit or other Interconnection Financial Security pursuant to Section 3.5.1 of the LGIP, then the Interconnection Request will be deemed withdrawn upon the Interconnection Customer's receipt of written notice by the CAISO pursuant to Section 3.8 of the LGIP.

13.0 Miscellaneous.

13.1 Dispute Resolution. Any dispute, or assertion of a claim, arising out of or in connection with this Agreement, shall be resolved in accordance with Section 13.5 of the LGIP.

13.2 Confidentiality. Confidential Information shall be treated in accordance with Section 13.1 of the LGIP.

13.3 Binding Effect. This Agreement and the rights and obligations hereof, shall be binding upon and shall inure to the benefit of the successors and assigns of the Parties hereto.

13.4 Conflicts. In the event of a conflict between the body of this Agreement and any attachment, appendices or exhibits hereto, the terms and provisions of the body of this Agreement shall prevail and be deemed the final intent of the Parties.

13.5 Rules of Interpretation. This Agreement, unless a clear contrary intention appears, shall be construed and interpreted as follows: (1) the singular number includes the plural number and vice versa; (2) reference to any person includes such person's successors and assigns but, in the case of a Party, only if such successors and assigns are permitted by this Agreement, and reference to a person in a particular capacity excludes such person in any other capacity or individually; (3) reference to any agreement (including this Agreement), document, instrument or tariff means such agreement, document, instrument, or tariff as amended or modified and in effect from time to time in accordance with the terms thereof and, if applicable, the terms hereof; (4) reference to any applicable laws and regulations means such applicable laws and regulations as amended, modified, codified, or reenacted, in whole or in part, and in effect from time to time, including, if applicable, rules and regulations promulgated thereunder; (5) unless expressly stated otherwise, reference to any Article, Section or Appendix means such Article or Section of this Agreement or such Appendix to this Agreement, or such Section of the LGIP or such Appendix to the

LGIP, as the case may be; (6) "hereunder", "hereof", "herein", "hereto" and words of similar import shall be deemed references to this Agreement as a whole and not to any particular Article, Section, or other provision hereof or thereof; (7) "including" (and with correlative meaning "include") means including without limiting the generality of any description preceding such term; and (8) relative to the determination of any period of time, "from" means "from and including", "to" means "to but excluding" and "through" means "through and including".

13.6 Entire Agreement. This Agreement, including all Appendices and Schedules attached hereto, constitutes the entire agreement between the Parties with reference to the subject matter hereof, and supersedes all prior and contemporaneous understandings or agreements, oral or written, between the Parties with respect to the subject matter of this Agreement. There are no other agreements, representations, warranties, or covenants which constitute any part of the consideration for, or any condition to, any Party's compliance with its obligations under this Agreement.

13.7 No Third Party Beneficiaries. This Agreement is not intended to and does not create rights, remedies, or benefits of any character whatsoever in favor of any persons, corporations, associations, or entities other than the Parties, and the obligations herein assumed are solely for the use and benefit of the Parties, their successors in interest and, where permitted, their assigns.

13.8 Waiver. The failure of a Party to this Agreement to insist, on any occasion, upon strict performance of any provision of this Agreement will not be considered a waiver of any obligation, right, or duty of, or imposed upon, such Party.

Any waiver at any time by either Party of its rights with respect to this Agreement shall not be deemed a continuing waiver or a waiver with respect to any other failure to comply with any other obligation, right, duty of this Agreement. Termination or default of this Agreement for any reason by the Interconnection Customer shall not constitute a waiver of the Interconnection Customer's legal rights to obtain an interconnection from the Participating TO or CAISO. Any waiver of this Agreement shall, if requested, be provided in writing.

Any waivers at any time by any Party of its rights with respect to any default under this Agreement, or with respect to any other matter arising in connection with this Agreement, shall not constitute or be deemed a waiver with respect to any subsequent default or other matter arising in connection with this Agreement. Any delay, short of the statutory period of limitations, in asserting or enforcing any right under this Agreement shall not constitute or be deemed a waiver of such right.

13.9 Headings. The descriptive headings of the various Articles and Sections of this Agreement have been inserted for convenience of reference only and are of no significance in the interpretation or construction of this Agreement.

13.10 Multiple Counterparts. This Agreement may be executed in two or more counterparts, each of which is deemed an original but all constitute one and the same instrument.

13.11 Amendment. The Parties may by mutual agreement amend this Agreement by a written instrument duly executed by both of the Parties.

13.12 Modification by the Parties. The Parties may by mutual agreement amend the Appendices to this Agreement by a written instrument duly executed by both of the Parties. Such amendment shall become effective and a part of this Agreement upon satisfaction of all applicable laws and regulations.

13.13 Reservation of Rights. The CAISO shall have the right to make a unilateral filing with FERC to modify this Agreement with respect to any rates, terms and conditions, charges, classifications of service, rule or regulation under section 205 or any other applicable provision of the Federal Power Act and FERC's rules and regulations thereunder, and Interconnection Customer shall have the right to make a unilateral filing with FERC to modify this Agreement pursuant to section 206 or any other applicable provision of the Federal Power Act and FERC's rules and regulations thereunder; provided that each Party shall have the right to protest any such filing by another Party and to participate fully in any proceeding before FERC in which such modifications may be considered. Nothing in this Agreement shall limit the rights of the Parties or of FERC under sections 205 or 206 of the Federal Power Act and FERC's rules and regulations thereunder, except to the extent that the Parties otherwise mutually agree as provided herein.

13.14 No Partnership. This Agreement shall not be interpreted or construed to create an association, joint venture, agency relationship, or partnership between the Parties or to impose any partnership obligation or partnership liability upon any Party. No Party shall have any right, power or authority to enter into any agreement or undertaking for, or act on behalf of, or to act as or be an agent or representative of, or to otherwise bind, another Party.

13.15 Assignment. This Agreement may be assigned by a Party only with the written consent of the other Party; provided that a Party may assign this Agreement without the consent of the other Party to any Affiliate of the assigning Party with an equal or greater credit rating and with the legal authority and operational ability to satisfy the obligations of the assigning Party under this Agreement; and provided further that the Interconnection Customer shall have the right to assign this Agreement, without the consent of the other Party, for collateral security purposes to aid in providing financing for the Large Generating Facility, provided that the Interconnection Customer will require any secured party, trustee or mortgagee to notify the other Party of any such assignment. Any financing arrangement entered into by the Interconnection Customer pursuant to this Section will provide that prior to or upon the exercise of the secured party's, trustee's or mortgagee's assignment rights pursuant to said arrangement, the secured creditor, the trustee or mortgagee will notify the other Party of the date and particulars of any such exercise of assignment right(s). Any attempted assignment that violates this Section is void and ineffective. Any assignment under this Agreement shall not relieve a Party of its obligations, nor shall a Party's obligations be enlarged, in whole or in part, by reason thereof. Where required, consent to assignment will not be unreasonably withheld, conditioned or delayed.

IN WITNESS THEREOF, the Parties have caused this Agreement to be duly executed by their duly authorized officers or agents on the day and year first above written.

California Independent System Operator Corporation

By

JAMES W DETMERS
Printed Name

VP OPERATIONS
Title

10/13/08
Date

Martifer Renewables Solar Thermal LLC

By

Douglas A. West
Printed Name

COO
Title

10.24.08
Date

Appendix A

Large Generator Interconnection Study Process Agreement

ASSUMPTIONS USED IN CONDUCTING THE PHASE I INTERCONNECTION STUDY

The Phase I Interconnection Study will be based upon the information set forth in the Interconnection Request and agreed upon in the Scoping Meeting held on January 9, 2008, subject to any modifications in accordance with Section 6.7.2 of the LGIP, and the following assumptions:

Designation of Point of Interconnection and configuration to be studied:

- **Gates Substation 230kV bus**

Deliverability status requested **(please select one)**:

☐ Full Capacity

☒ Energy Only

Appendix B

Large Generator Interconnection Study Process Agreement

DATA FORM TO BE PROVIDED BY THE INTERCONNECTION CUSTOMER PRIOR TO COMMENCEMENT OF THE PHASE II INTERCONNECTION STUDY

Generating Facility size (MW): _____

Provide two copies of this completed form and other required plans and diagrams in accordance with Section 7.1 of the LGIP.

Provide location plan and one-line diagram of the plant and station facilities. For staged projects, please indicate future generation, transmission circuits, etc.

One set of metering is required for each generation connection to the new bus or existing CAISO Controlled Grid station. Number of generation connections: _____

On the one line indicate the generation capacity attached at each metering location. (Maximum load on CT/PT)

On the one line indicate the location of auxiliary power. (Minimum load on CT/PT)

Will an alternate source of auxiliary power be available during CT/PT maintenance?
☐ Yes ☐ No

Will a transfer bus on the generation side of the metering require that each meter set be designed for the total plant generation? ☐ Yes ☐ No

(Please indicate on one line).

What type of control system or PLC will be located at the Interconnection Customer's Large Generating Facility?

_____

_____

What protocol does the control system or PLC use?

_____

_____

Please provide a 7.5-minute quadrangle of the site. Sketch the plant, station, transmission line, and property line.

Physical dimensions of the proposed interconnection station:

_____

Bus length from generation to interconnection station:

_____

Line length from interconnection station to the Participating TO's transmission line.

_____

Tower number observed in the field. (Painted on tower leg)*

_____

Number of third party easements required for transmission lines*:

_____

* To be completed in coordination with the Participating TO or CAISO.

Is the Large Generating Facility in the Participating TO's service area?

☐ Yes ☐ No

Local service provider for auxiliary and other power: _____

Please provide proposed schedule dates:

Environmental survey start: _____

Environmental impact report submittal: _____

Procurement of project equipment: _____

Begin Construction Date:_____

Generator step-up transformer receives back feed power Date:_____

Generation Testing Date:_____

Commercial Operation Date Date:_____

Level of Deliverability: Choose one of the following:

☐ Energy Only

☐ Full Capacity

CIVIL ENGINEERING DESIGN CRITERIA

Civil Engineering Design Criteria

1.0 Introduction

This appendix summarizes the codes, standards, criteria, and practices that will be generally used in the design and construction of civil engineering systems for the San Joaquin Solar Hybrid 1 & 2 Project. More specific project information will be developed during execution of the project to support detailed design, engineering, material procurement specification, and construction specifications as required.

2.0 Codes and Standards

The design of civil engineering systems for the project will be in accordance with the laws, ordinances, and regulations of the federal government, the State of California, and Fresno County, local ordinances and industry standards. The most current issue or revision of rules, regulations, codes, ordinances, and standards at the time of filing this Application for Certification will apply, unless otherwise noted. If there are conflicts between cited documents, the more conservative requirements will be used.

2.1 Civil Engineering Codes and Standards

The following codes and standards are applicable to the civil engineering design of the power facility:

- American Association of State Highway and Transportation Officials (AASHTO)
- American Concrete Institute (ACI)
- American Institute of Steel Construction (AISC)
- American National Standards Institute (ANSI)
- American Society for Testing and Materials (ASTM)
- American Water Works Association (AWWA)
- American Welding Society (AWS)
- Asphalt Institute (AI)
- California Building Code (CBC)
- California Department of Transportation (Cal Trans)
- California Energy Commission – Recommended Seismic Design Criteria for Non-Nuclear Generating Facilities in California
- Concrete Reinforcing Steel Institute (CRSI)
- Factory Mutual (FM)
- Federal and California Occupational Safety and Health Administration (OSHA and CAL-OSHA)
- National Fire Protection Association (NFPA)

. Steel Structures Painting Council (SSPC)

2.2 Engineering Geology Codes, Standards, and Certifications

Engineering geology activities will conform to the applicable federal, state, and local laws, regulations, ordinances and industry standards.

2.2.1 Federal

None are applicable

2.2.2 State

The Warren-Alquist Act, PRC, Section 25000 et seq. and the California Energy Commission (CEC) Code of Regulations (CCR), Siting Regulations, Title 20 CCR, Chapter 2, require that the Application for Certification (AFC) address the geologic and seismic aspects of the project.

The California Environmental Quality Act (CEQA), PRC 21000 et seq. and the CEQA Guidelines require that potentially significant effects, including geologic hazards, be identified and a determination made as to whether they can be substantially reduced.

2.2.3 Local

California State Planning Law, Government Code Section 65302, requires each city and county to adopt a general plan, consisting of nine mandatory elements, to guide its physical development. Section 65302(f) requires that a seismic safety element be included in the general plan.

The project development activities will require certification by a Professional Geotechnical Engineer and a Professional Engineering Geologist during and following construction, in accordance with the CBC, Chapter 33 and Appendix Chapter 33. The professional Geotechnical Engineer and /or the Professional Engineering Geologist will certify the placement of earthen fills and the adequacy of the site for structural improvements, as follows:

> Both the Professional Geotechnical Engineer and the Professional Engineer will address CBC Appendix Chapter 33, Sections 3309 (Grading Permits), 3312 (Cuts), 3313 (Fills), 3315 (Terraces), 3316 (Erosion Control), and 3318 (Final Reports).
>
> The Professional Geotechnical Engineer will also address CBC Appendix Chapter 33, Sections 3314 (Setbacks) and 3315 (Terraces).

Additionally, the Professional Engineering Geologist will present findings and conclusions pursuant to PRC, Section 25523 (a) and (c); and 20 CCR, Section 1752 (b) and (c).

2.3 Storm Drainage Codes, Standards, and Certifications

Storm drainage design activities will conform to the applicable federal, state, and local laws, regulations, ordinances and industry standards. The design of all storm drainage will be performed by, or under the direct supervision of, a licensed civil engineer.

2.3.1 Federal

Finish floors and grade elevations shall be based upon flood plain elevations as established by the Federal Emergency Management Agency.

2.3.2 State

None are applicable

2.3.3 Local

The County of Fresno County has specific design requirements for storm water management that will be met by this project.

STRUCTURAL ENGINEERING DESIGN CRITERIA

Structural Engineering Design Criteria

1.0 Introduction

This appendix summarizes the codes, standards, criteria and practices that will be generally used in the design and construction of structural engineering systems for the San Joaquin Solar Hybrid 1 & 2 Project (SJS 1&2). More specific project information will be developed during execution of the Project to support detailed design, engineering, material procurement specification, and construction specifications.

2.0 Codes and Standards

The design of structural engineering systems for SJS 1&2 will be in accordance with the laws, ordinances, and regulations of the federal government, the State of California, and Fresno County ordinances, and the industry standards. The current issue or edition of the documents at the time of filing of this Application for Certification (AFC) will apply, unless otherwise noted. In cases where conflicts between the cited documents exist, requirements of the more conservative document will be used.

The following codes and standards have been identified as applicable, in whole or in part, to Structural engineering design and construction of power plants:

- California Building Code (CBC)
- American Institute of Steel Construction (AISC):
  - Manual of Steel Construction - 9th Edition
  - Specification for the Design, Fabrication and Erection of Structural Steel for Buildings - ASD
  - Specification for Structural Joints Using ASTM A325 or A490 Bolts
  - Code of Standard Practice for Steel Buildings and Bridges
- American Concrete Institute (ACI):
  - ACI 318, Building Code Requirements for Structural Concrete
- ACI 301, Specifications for Structural Concrete for Buildings
- ACI 350R, Environmental Engineering Concrete Structures
  - ACI 543R, Design, Manufacture, and Installation of Concrete Piles
- American Society of Civil Engineers (ASCE):
  - ASCE 7 - Minimum Design Loads for Buildings and Other Structures
- American Welding Society (AWS):
  - Dl.l - Structural Welding Code - Steel
  - D1.3 - Structural Welding Code - Sheet Steel
- Code of Federal Regulations, Title 29 - Labor, Chapter XVII, Occupational Safety and Health Administration (OSHA).
  - Part 1910 - Occupational Safety and Health Standards
  - Part 1926 - Construction Safety and Health Regulations
- National Association of Architectural Metal Manufacturer (NAAMM) - Metal Bar Grating Manual.

- Hoist Manufacturers Institute (HMI), Standard Specifications for Electric Wire Rope Hoists (HMI 100).
- National Electric Safety Code (NESC)
- National Fire Protection Association (NFPA Standards).
  - NFPA 850 Fire Protection for Electric Generating Plants.
- Steel Deck Institute (SDI)-Design Manual for Floor Decks and Roof Decks.
- Design of Large Steam Turbine-Generator Foundations, ASCE 1987.

3.0 CEC Special Requirements

Prior to the start of any increment of construction, the proposed lateral force procedures for SJS 1&2 structures and the applicable designs, plans and drawings for structures will be submitted for approval.

Proposed lateral-force procedures, designs, plans, and drawings shall be those for:

- Major SJS 1&2 structures
- Major foundations, equipment supports, and anchorage
- Large, field-fabricated tanks
- Turbine/generator pedestal
- Switchyard structures

4.0 Structural Design Criteria

4.1 Topographic Elevations

Site topographic elevations will be based on an elevation survey conducted using known elevation benchmarks.

4.2 Frost Penetration

The site is located in an area free of frost penetration. Bottom elevation of all foundations for structures and equipment, however, will be maintained at a minimum of 12 inches below the finished grade.

4.3 Temperatures

The design basis temperatures for civil and structural engineering systems will be as follows:

Maximum: 114 F

Minimum: 17 F

4.4 Design Loads

4.4.1 General

Design loads for structures and foundations will comply with all applicable building code requirements.

4.4.2 Dead Loads

Dead loads will consist of the weights of the structure and all equipment of a permanent or semi permanent nature including tanks, bins, wall panels, partitions, roofing, drains, piping, cable trays, bus ducts, and the contents of tanks and bins measured at full operating capacity. The contents of the tanks and bins, however, will not be considered as effective in resisting structure uplift due to wind forces; but will be considered as effective for seismic forces.

4.4.3 Live Loads

Live loads will consist of uniform floor live loads and equipment live loads. Uniform live loads are assumed equivalent unit loads that are considered sufficient to provide for movable and transitory loads, such as the weights of people, portable equipment and tools, small equipment or parts, which may be moved over or placed on the floors during maintenance operations, and planking. The uniform live loads will not be applied to floor areas that will be permanently occupied by equipment.

Lateral earth pressures, hydrostatic pressures, and wheel loads from trucks will be considered as live loads.

Uniform live loads will be in accordance with ASCE 7, but will not be less than the following:

a. Roofs: 20 psf
b. Floors and Platforms (Steel grating and checkered plates): 100 psf

In addition, a uniform load of 50 psf will be used to account for piping and cable trays, except that where the piping and cable loads exceed 50 psf, the actual loads will be used.

Furthermore, a concentrated load of 5 kips will be applied concurrently to the supporting beams of the floors to maximize stresses in the members, but the reactions from the concentrated loads will not be carried to the columns.

c. Floors (Elevated Concrete floors): 100 psf

In addition, elevated concrete slabs will be designed to support an alternate concentrated load of 2 kips in lieu of the uniform loads, whichever govern. The concentrated load will be treated as uniformly distributed load acting over an area of 2.5 square feet, and will be located in a manner to produce the maximum stress conditions in the slabs.

d. Control Room Floor: 150 psf
e. Stairs, Landings and, Walkways: 100 psf

In addition, a concentrated load of 2 kips will be applied concurrently to the supporting beams for the walkways to maximize the stresses in the members, but the reactions from the concentrated loads will not be carried to the columns.

f. Pipe Racks: 100 psf

Where the piping and cable tray loads exceed the design uniform load, the actual loads will be used. In addition, a concentrated load of 15 kips will be applied concurrently to the supporting beams for the walkways to maximize the stresses in the members, but the reactions from the concentrated loads will not be carried to the columns.

g. Hand Railings

Hand railings will be designed for either a uniform horizontal force of 50 plf applied simultaneously with a 100 plf uniform vertical live load, or a 200-pound concentrated load applied at any point and in any direction, whichever governs.

h. Slabs on Grade: 250 psf
i. Truck Loading Surcharge Adjacent to Structures: 500 psf during normal operation and 1,000 psf during construction
j. Truck Support Structures: AASHTO-HS20-44
k. Special Loading Conditions: Actual loadings

Lay down loads from equipment components during maintenance and floor areas where trucks, forklifts, or other transports will have access will be considered in the design live loads.

Live loads may be reduced in accordance with the provisions of CBC Section 1607.

Posting of the floor load capacity signs for all roofs, elevated floors, platforms and walkways will be in compliance with the OSHA Occupational Safety and Health Standard, Walking and Working Surfaces, Subpart D. Floor load capacity for slabs on grade will not be posted.

4.4.4 Earth Pressures

Earth pressures will be in accordance with the recommendations contained in SJS 1&2 geotechnical report.

4.4.5 Groundwater Pressures

Hydrostatic pressures due to groundwater or temporary water loads will be considered.

4.4.6 Wind Loads

The wind forces will be calculated in accordance with CBC, Chapter 16, Division III, with a basic wind speed of 80 mph and a "C" exposure category.

4.4.7 Seismic Loads

Structures will be designed and constructed to resist the effects of earthquake loads as determined in CBC, Chapter 16, Division IV. The site is located on seismic zone 4. The occupancy category of the structure is 3 (Special Occupancy Structure) and corresponding importance factor (I) is 1.00. Other seismic parameters will be obtained from the geotechnical report.

4.4.8 Snow Loads

Snow loads will not be considered.

4.4.9 Turbine-Generator Loads

The combustion turbine-generators and the steam-turbine generators loads for pedestal and foundation design will be furnished by the equipment manufacturers, and will be applied in accordance with the equipment manufacturers' specifications, criteria and recommendations.

4.4.10 Special Considerations for Steel Stacks

Steel stacks will be designed to withstand the normal and abnormal operating conditions in combination with wind loads and seismic loads, and will include the along-wind and across-wind effects on the stacks. The design will meet the requirements of ASME/ANSI STS1 -2000, "Steel Stacks," using allowable stress design method, except that increased allowable stress for wind loads, as permitted by AISC, will not be used.

4.4.11 Special Considerations for Structures and Loads During Construction

For temporary structures, or permanent structures left temporarily incomplete to facilitate equipment installations, or temporary loads imposed on permanent structures during construction, the allowable stresses may be increased by 33 percent.

Structural backfill may be placed against walls, retaining walls, and similar structures when the concrete strength attains 80 percent of the design compressive strength (f'c), as determined by sample cylinder tests. Restrictions on structural backfill, if any, will be shown on the engineering design drawings.

Design restrictions imposed on construction shoring removal that are different from normal practices recommended by the ACI Codes will be shown on engineering design drawings.

Metal decking used as forms for elevated concrete slabs will be evaluated to adequately support the weight of concrete plus a uniform construction load of 50 psf, without increase

5.0 Design Bases

5.1 General

Reinforced concrete structures will be designed by the strength design method, in accordance with ACI 318, "Building Code Requirements for Structural Concrete."

Steel structures will be designed by the working stress method, in accordance with AISC Specification for the Design, Fabrication and Erection of Structural Steel for Buildings.

Allowable soil bearing pressures for foundation design will be in accordance with the "Final Subsurface Investigation and Foundation Report" for SJS 1&2.

Reinforced concrete for sumps, cooling tower basins, and other structures designed to contain water will meet the requirements of ACI 350.

5.2 Factors of Safety

The factor of safety for all structures, tanks, and equipment supports will be as follows:

Against Overturning: 1.5

Against Sliding: 1.5 for Wind Loads, 1.1 for Seismic Loads

Against Uplift Due to Wind: 1.5

Against Buoyancy: 1.25

5.3 Allowable Stresses

Calculated stresses from the governing loading combinations for structures and equipment supports will not exceed the allowable limits permitted by the applicable codes, standards and specifications.

5.4 Load Factors and Load Combinations

For reinforced concrete structures and equipment supports, using the strength method, the strength design equations will be determined based on CBC, Sections 1612.2,1612.4, 1909.2 and using ACI-3 18 Eqs (9-2), (9-3). The Allowable Stress Design load combinations of CBC section 1612.3 will be used to assess soil bearing pressure and stability of structures per CBC Sections 1805 and 1629.1, respectively.

Steel framed structures will be designed in accordance with CBC, Chapter 22, Divisions I, III and IV and the AISC Specification for the Structural Steel Buildings, Allowable Stress Design and Plastic Design. Connections will conform to Research Council on Structural Connections of the Engineering Foundation Specification for Structural Joints. Connections for moment frame structures will conform to the recommendations of FEMA Report 350 for seismic connections.

6.0 Construction Materials

6.1 Concrete and Grout

The design compressive strength (f'c) of concrete and grout, as measured at 28 days, will be as follows:

Electrical duct bank encasement and lean concrete backfill (Class L-1): 2000 psi
Structural concrete (Class Sl): 3000 psi
Structural concrete (Class S2): 4000 psi
Grout (Class G-1): 5000 psi

The classes of concrete and grout to be used will be shown on engineering design drawings or indicated in design specifications.

6.2 Reinforcing Steel

Reinforcing steel bars for concrete will be deformed bars of billet steel, conforming to ASTM A 615, Grade 60.

Welded wire fabric for concrete will conform to ASTM A 185.

6.3 Structural and Miscellaneous Steel

Structural and miscellaneous steel will generally conform to ASTM A 36, ASTM A 572 or ASTM A992 except in special situations where higher strength steel is required.

High strength structural bolts, including nuts and washers, will conform to ASTM A 325 or ASTM A 490.

Bolts other than high strength structural bolts will conform to ASTM 307, Grade A.

6.4 Concrete Masonry

Concrete masonry units will be hollow, normal weight, non-load bearing Type I conforming to ASTM C 129. Mortar will conform to ASTM C 270, Type M. Grout will conform to ASTM C 476.

6.5 Other Materials

Other materials for construction, such as anchor bolts, shear connectors, concrete expansion anchors, embedded metal, etc., will conform to industry standards and will be identified on engineering design drawings or specifications.

MECHANICAL ENGINEERING DESIGN CRITERIA

Mechanical Engineering Design Criteria

1.0 Introduction

This appendix summarizes the codes, standards, criteria, and practices that will be generally used in the design and construction of mechanical engineering systems for the San Joaquin Solar 1 and San Joaquin Solar 2 Plants (SJS 1&2). More specific project information will be developed during execution of the project to support detailed design, engineering, material procurement specification, and construction specifications.

2.0 Codes and Standards

The design of the mechanical systems and components will be in accordance with the laws and regulations of the federal government, the State of California, Fresno County, and local ordinances, and industry standards. The most current issue or revision of rules, regulations, codes, ordinances, and standards at the time of filing this Application for Certification will apply, unless otherwise noted. If there are conflicts between cited documents, the more conservative requirements will apply.

The following codes and standards are applicable to the mechanical aspects of the power facility:

- California Building Standards Code, 2001
- American Society of Mechanical Engineers (ASME) Boiler and Pressure Vessel Code
- American National Standards Institute (ANSI) B 16.5, B 16.34, and B 133.8
- ASME/ ANSI B3 1.1 Power Piping Code
- ASME Performance Test Codes
- ASME Standard TDP-1
- American Boiler Manufacturers Association (ABMA)
- American Gear Manufacturers Association (AGMA)
- Air Moving and Conditioning Association (AMCA)
- American Society for Testing and Materials (ASTM)
- American Society of Heating, Refrigerating, and Air Conditioning Engineers (ASHRAE)
- American Welding Society (AWS)
- Cooling Tower Institute (CTI)
- Heat Exchange Institute (HEI)
- Manufacturing Standardization Society (MSS) of the Valve and Fitting Industry
- National Fire Protection Association (NFPA)
- Hydraulic Institute Standards (HIS)
- Tubular Exchanger Manufacturers Association (TEMA)
- National Board of Boiler and Pressure Vessel Inspectors
- American Petroleum Institute (API)

3.0 General Design Criteria

3.1 General

The systems, equipment, and materials and their installation will be designed in accordance with applicable codes; industry standards; local, state, and federal regulations; design criteria; manufacturing processes and procedures; and material selection, testing, welding, and finishing procedures specified in this section.

The equipment vendors in accordance with general performance requirements will perform detailed equipment design. General performance requirements will be specified by the EPC (Engineering, Procurement and Construction) contractor. Equipment vendors will be responsible for using construction materials suited for the intended use.

3.2 Materials

Asbestos will not be present in the materials and equipment supplied. Materials will be selected to withstand the design operating conditions, including expected ambient conditions, for the design life of the plant. It is anticipated that some materials will require replacement during the life of the plant due to corrosion, erosion or other factors.

3.3 Pumps

Pumps will be sized in accordance with industry standards. Where feasible, pumps will be sized for maximum efficiency at the normal operating point. Pumps will be designed to be free from excessive vibration throughout the operating range.

3.4 Tanks

Large outdoor storage tanks will not be insulated except where required to maintain appropriate process temperatures or for personnel protection.

Overflow connections and lines will be provided. Maintenance drain connections will be provided for complete tank drainage.

Manholes, where provided, will be at least 24 inches in diameter with hinges or lifting davits to facilitate removal. Storage tanks will have ladders and cleanout doors as required to facilitate access/maintenance. Provisions will be included for proper tank ventilation during internal maintenance.

3.5 Heat Exchangers

Heat exchangers will be provided as components of mechanical equipment packages and may be

shell-and-tube or plate and frame type. Heat exchangers will be designed in accordance with TEMA or manufacturer's standards. Fouling factors will be specified in accordance with TEMA.

3.6 Pressure Vessels

Pressure vessels will include the following features and appurtenances:

- Process, vent, and drain connections for startup, operation, and maintenance.
- Materials compatible with the fluid being handled
- A minimum of one manhole and one air ventilation opening will be provided where required for maintenance or cleaning access.
- For vessels requiring insulation, shop-installed insulation clips spaced not greater than 18 inches on center will be utilized.
- Relief valves will be provided for all pressure vessels in accordance with applicable codes.

3.7 Piping and Piping Supports

Stainless steel pipe may be Schedule 10S where design pressure permits. Stainless steel piping will be used for portions of the lubricating oil system downstream of the filters. Carbon steel piping may be used elsewhere. Underground piping may be high-density polyethylene (HDPE) or polyvinyl chloride (PVC) where permitted by code, operating conditions, and fluid properties. Victaulic, or equal, couplings may be used for low pressure above ground piping, where feasible. Threaded joints will not be used in piping used for steam, lubricating oil, and for natural gas service.

In general, water system piping will be HDPE or PVC where embedded or underground and carbon steel where aboveground. Appropriately lined and coated carbon steel pipe or ductile iron pipe may be used for buried water piping.

Piping systems will have high-point vents and low-point drains. Hose and process tubing connections to portable components and systems will be compatible with the respective equipment suppliers' standard connections for each service.

3.8 Valves

3.8.1 General Requirements

Valves will be arranged for convenient operation from floor level where possible and, if required, will have extension spindles, chain operators, or will be gear operated. Hand-actuated valves will be operable by one person. Gear operators will be provided on manual valves 8 inches or larger.

Valves will be arranged to close when the handwheel is rotated in a clockwise direction when looking at the handwheel from the operating position. The direction of rotation to close the valve

will be clearly marked on the face of each handwheel.

The stops that limit the travel of each valve in the open or closed position will be arranged on the exterior of the valve body. Valves will be fitted with an indicator to show whether they are open or closed; however, only critical valves will be remotely monitored for position. Valve materials will be suitable for operation at the maximum working pressure and temperature of the piping to which they are connected. Steel valves will have cast or forged steel spindles. Seats and faces will be of low-friction, wear-resistant materials. Valves in throttling service will be selected with design characteristics and of materials that will resist erosion of the valve seats when the valves are operated partly closed.

Valves operating at less than atmospheric pressure will include means to prevent air in-leakage. No provision will be made to repack valve glands under pressure.

3.8.2 Drain and Vent Valves and Traps

Drains and vents in 600-pound class or higher piping and 900°F or higher service will be double-valved. Drain traps will include air cock and easing mechanism. Internal parts will be constructed from corrosion-resistant materials and will be renewable.

Trap bodies and covers will be cast or forged steel and will be suitable for operating at the maximum working pressure and temperature of the piping to which they are connected. Traps will be piped to drain collection tank or sumps and returned to the cycle if convenient.

3.8.3 Low-Pressure Water Valves

Low-pressure water valves will be the butterfly type of cast iron construction. Ductile iron valves will have ductile iron bodies, covers, gates (discs), and bridges; the spindles, seats, and faces will be bronze. Fire protection valves will be Underwriters Laboratories (UL)-approved butterfly valves meeting NFPA requirements.

3.8.4 Instrument Air Valves

Instrument air valves will be the ball type of bronze or stainless steel construction, with valve face and seat of approved wear-resistant alloy.

3.8.5 Nonreturn Valves

Nonreturn valves will be in accordance with ANSI standards and properly drained. Nonreturn valves in vertical positions will have bypass and drain valves. Bodies will have removable access covers to enable the internal parts to be examined or renewed without removing the valve from the pipeline.

3.8.6 Motor Actuated Valves

Electric motor actuators will be designed specifically for the operating speeds, differential and static pressures, flowrates, operating environment, and frequency of operations for the application intended. Electric actuators will have self-locking features. A handwheel and declutching mechanism will be provided to allow handwheel engagement at any time except when the motor is energized. Actuators will automatically revert back to motor operation by disengaging the handwheel, The motor actuator will be placed in a position relative to the valve that prevents leakage of liquid or gas from valve joints.

3.8.7 Safety and Relief Valves

Safety valves or relief valves will be provided as required by code for pressure vessels, heaters, and boilers. Safety and relief valves will be installed vertically. Piping systems that can be over-pressurized by a higher-pressure source will also be protected by pressure-relief valves. Equipment or parts of equipment that can be over-pressurized by thermal expansion of the contained liquid will also have thermal relief valves.

3.8.8 Instrument Root Valves

Instrument root valves will be specified for operation at the working pressure and temperature of the piping to which they are connected. Test points and sample lines in systems that are 600-pound class or higher service will be double-valved.

3.9 Heating, Ventilating, and Air Conditioning (HVAC)

HVAC system design will be based on site ambient conditions as described in Section 3.0, Project Description. Air conditioning will include both heating and cooling of filtered air. Except for the HVAC systems serving the control room and administration areas, the systems will not be designed to provide comfort levels for extended human occupancy.

Air velocities in ducts, louvers and grills will be low enough to minimize noise levels in areas where personnel are normally located.

Fans and motors will be mounted on anti-vibration bases to isolate the units from the building structure. Exposed fan outlets and inlets will be fitted with guards. Belt-driven fans, pulleys and belts will be provided with appropriate guards.

Air filters will be housed in a manner that facilitates removal. The filter frames will be designed to pass the air being handled through the filter without leakage.

Ductwork, filter frames, and fan casings will be constructed of galvanized mild steel sheets stiffened

with galvanized mild steel flanges. Ductwork will be the sectional bolted type and will be adequately supported. Duct joints will be leak tight. Grills and louvers will be of adjustable metal construction.

3.10 Thermal Insulation and Lagging

Parts of the facility requiring insulation to reduce heat loss or afford personnel safety will be thermally insulated. Minimum insulation thickness for hot surfaces near personnel will be designed to limit the outside lagging surface temperature to a maximum of 140°F, based on 80°F ambient temperature and 1 mph/hr air velocity. Other insulation minimums will be designed to limit heat loss to 80 Btu/hr-sqft based on 80°F ambient condition and an air velocity of 20 mph.

The thermal insulation will have as its main constituent calcium silicate, foam glass, fiberglass, or mineral wool, and will consist of pre-formed slabs or blankets, where feasible. Asbestos material will be prohibited. An aluminum jacket or suitable coating will be provided on the outside surface of the insulation. Where a hard setting compound is used as an outer coating, it will be nonabsorbent and noncracking. Thermal insulation will be chemically inert even when saturated with water. Insulation system materials, including jacketing, will have a flame spreading rating of 25 or less when tested in accordance with ASTM E84.

Insulation at valves, pipe joints or other points where access may be required for maintenance will be removable with minimum disturbance to the pipe insulation. At each flange joint, the molded material will terminate on the pipe at a distance from the flange equal to the over all length of the flange bolts to permit their removal without damaging the molded insulation.

Above ground insulated piping will be clad with pebbled or corrugated aluminum lagging of not less than 0.30? mm thickness and frame reinforced. At the joints, the sheets will be sufficiently overlapped and corrugated to prevent moisture from penetrating the insulation.

Design temperature limits for thermal insulation will be based on system operating temperatures during normal operations.

Outdoor and underground insulation will be moisture resistant.

Any piping that is subject to freezing will be heat traced or have other means of freeze protection.

3.11 Testing

Hydrostatic testing, including pressure testing at 1.5 times the design pressure, will be performed for those components where in-service test is not feasible or permitted by code.

3.12 Welding

Welders and welding procedures will be certified in accordance with the requirements of applicable codes and standards before any welding is permitted. Contractors will maintain indexed records of welder qualifications and weld procedures.

3.13 Painting

Except as otherwise specified, equipment will receive the respective manufacturer’s standard shop finish. Finish colors will be selected from amongst the paint manufacturer’s standard colors.

Finish painting of uninsulated piping will be limited to that required by OSHA for safety or for protection from the elements.

Piping to be insulated will not be painted.

3.14 Lubrication

The types of lubrication specified for facility equipment will be suited to the operating conditions and will comply with the recommendations of the equipment manufacturers.

The initial startup charge of flushing oil will be the equipment manufacturer's standard lubricant for the intended service. Subsequently, such flushing oil will be sampled and analyzed to determine whether it can also be used for normal operation or must be replaced in accordance with the equipment supplier's recommendations.

Rotating equipment will be splash lubricated, force lubricated, or self lubricated. Oil cups will be provided as necessary. Where automatic lubricators are fitted to equipment, provision for emergency hand lubrication will also be specified. Where applicable, equipment will be designed to be manually lubricated while in operation without the need to remove protective guards. Lubrication filling and drain points will be readily accessible.

CONTROL SYSTEMS ENGINEERING DESIGN CRITERIA

Control Systems Engineering Design Criteria

1.0 Introduction

This appendix summarizes the codes, standards, criteria, and practices that will be generally used in the design and installation of instrumentation and controls for the San Joaquin Solar 1 & 2 (SJS 1 & 2). More specific project information will be developed during execution of the project to support detailed design, engineering, material procurement specification, and construction specifications.

2.0 Codes and Standards

The design of the control systems and components will be in accordance with the laws and regulations of the federal government, the State of California, County of Fresno and local ordinances, and industry standards. The most current issue or revision of rules, regulations, codes, ordinances, and standards at the time of filing this Application for Certification will apply, unless otherwise noted. If there are conflicts between cited documents, the more conservative requirements will apply.

The following codes and standards are applicable to the mechanical aspects of the power facility:

- The Institute of Electrical and Electronics Engineers (IEEE)
- Instrument Society of America (ISA)
- American National Standards Institute (ANSI)
- American Society of Mechanical Engineers (ASME)
- American Society for Testing and Materials (ASTM)
- National Electrical Manufacturers Association (NEMA)
- National Electrical Safety Code (NESC)
- National Fire Protection Association (NFPA)

3.0 Control Systems Design Criteria

3.1 General Plant Control Philosophy

An overall programmable logic controller (PLC) will be used as the top-level supervisor and controller for the project PLC operator workstations will be located in the control room of the Administration and Control Building. The intent is for the plant operator to be able to completely run the entire power island from a PLC operator station, without the need to interface to other local panels or devices. The PLC system will provide appropriate hard-wired signals to enable control and operation of all plant systems required for complete automatic operation.

Each combustion turbine generator is provided with its own microprocessor based control system with both local and remote operator workstations, installed on the turbine-generator control panels and in the remote main control room, respectively. The PLC shall provide supervisory control and monitoring of the turbine generator.

Several of the larger packaged subsystems associated with the project include their own PLC based dedicated control systems. For larger systems that have dedicated control systems, the BOP PLC will function mainly as a monitor, using network data links to collect, display, and archive operating data.

Pneumatic signal levels, where used, will be 3 to 15 psig for pneumatic transmitter outputs, controller outputs, electric-to-pneumatic converter outputs, and valve positioner inputs.

Instrument analog signals for electronic instrument systems shall be 4 to 20 ma dc.

The primary sensor full-scale signal level, other than thermocouples, will be between 10 mV and 125 V.

3.2 Pressure Instruments

In general, pressure instruments will have linear scales with units of measurement in pounds per square inch gauge.

Pressure gauges will have either a blowout disk or a blowout back and an acrylic or shatterproof glass face.

Pressure gauges on process piping will be resistant to plant atmospheres.

Pressure test points will have isolation valves and caps or plugs. Pressure devices on pulsating services will have pulsation dampers.

3.3 Temperature Instruments

In general, temperature instruments will have scales with temperature units in degrees Fahrenheit. Exceptions to this are electrical machinery RTDs and transformer winding temperatures, which are in degrees Celsius.

Dial thermometers will have 4-1 /2- or 5-inch-in-diameter (minimum) dials and white faces with black scale markings and will be every-angle type and bimetal actuated. Dial thermometers will be resistant to plant atmospheres.

Temperature elements and dial thermometers will be protected by thermowells except when measuring gas or air temperatures at atmospheric pressure. Temperature test points will have thermowells and caps or plugs.

RTDs will be either 100 ohm platinum or 10 ohm copper, ungrounded, three-wire circuits (R_{100}/R_0-1.385). The element will be spring-loaded, mounted in a thermowell, and connected to a cast iron head assembly.

Thermocouples will be single-element, grounded, spring-loaded, Chromel-Constantan (ANSI Type E) for general service. Thermocouple heads will be the cast type with an internal grounding screw.

3.4 Level Instruments

Reflex-glass or magnetic level gauges will be used. Level gauges for high-pressure service will have suitable personnel protection.

Gauge glasses used in conjunction with level instruments will cover a range that is covered by the instrument. Level gauges will be selected so that the normal vessel level is approximately at gauge center.

3.5 Flow Instruments

Flow transmitters will be the differential pressure type with the range matching the primary element. In general, linear scales and charts will be used for flow indication and recording.

In general, airflow measurements will be temperature-compensated.

3.6 Control Valves

Control valves in throttling service will generally be the globe-body cage type with body materials, pressure rating, and valve trims suitable for the service involved. Other style valve bodies (e.g., butterfly, eccentric disk) may also be used when suitable for the intended service.

Valves will be designed to fail in a safe position.

Control valve body size will not be more than two sizes smaller than line size, unless the smaller size is specifically reviewed for stresses in the piping.

Control valves in 600-class service and below will be flanged where economical. Where flanged valves are used, minimum flange rating will be ANSI 300 Class.

Severe service valves will be defined as valves requiring anti-cavitation trim, low noise trim, or flashing service, with differential pressures greater than 100 psid.

In general, control valves will be specified for a noise level no greater than 90 dBA when measured 3 feet downstream and 3 feet away from the pipe surface.

Valve actuators will use positioners and the highest pressure, smallest size actuator, and will be the pneumatic-spring diaphragm or piston type. Actuators will be sized to shut off against at least 110 percent of the maximum shutoff pressure and designed to function with instrument air pressure ranging from 60 to 125 psig.

Handwheels will be furnished only on those valves that can be manually set and controlled during system operation (to maintain plant operation) and do not have manual bypasses.

Control valve accessories, excluding controllers, will be mounted on the valve actuator unless severe vibration is expected.

Solenoid valves supplied with the control valves will have Class H coils. The coil enclosure will normally be a minimum of NEMA 4 but will be suitable for the area of installation.

Terminations will typically be by pigtail wires.

Valve position switches (with input to the DCS for display) will be provided for MOVs and open/ close pneumatic valves. Automatic combined recirculation flow control and check valves (provided by the pump manufacturer) will be used for pump minimum-flow recirculation control. These valves will be the modulating type.

3.7 Instrument Tubing and Installation

Tubing used to connect instruments to the process line will be 3/8- or 1/2-inch-outsidediameter copper or stainless steel as necessary for the process conditions.

Instrument tubing fittings will be the compression type. One manufacturer will be selected for use and will be standardized as much as practical throughout the plant.

Differential pressure (flow) instruments will be fitted with three-valve manifolds; two-valve manifolds will be specified for other instruments as appropriate.

Instrument installation will be designed to correctly sense the process variable. Taps on process lines will be located so that sensing lines do not trap air in liquid service or liquid in gas service. Taps on process lines will be fitted with a shutoff (root or gauge valve) close to the process line. Root and gauge valves will be main-line class valves.

Instrument tubing will be supported in both horizontal and vertical runs as necessary.

Expansion loops will be provided in tubing runs subject to high temperatures. The instrument tubing support design will allow for movement of the main process line.

3.8 Pressure and Temperature Switches

Field-mounted pressure and temperature switches will have either NEMA Type 4 housings or housings suitable for the environment.

In general, switches will be applied such that the actuation point is within the center one-third of the instrument range.

3.9 Field-Mounted Instruments

Field-mounted instruments will be of a design suitable for the area in which they are located. They will be mounted in areas accessible for maintenance and relatively free of vibration and

will not block walkways or prevent maintenance of other equipment. Freeze protection will be provided.

Field-mounted instruments will be grouped on racks. Supports for individual instruments will be prefabricated, off-the-shelf, 2-inch pipe stand. Instrument racks and individual supports will be mounted to concrete floors, to platforms, or on support steel in locations not subject to excessive vibration.

Individual field instrument sensing lines will be sloped or pitched in such a manner and be of such length, routing, and configuration that signal response is not adversely affected.

Local control loops will generally use a locally mounted indicating controller (flow, pressure, temperature, etc.).

Liquid level controllers will generally be the non-indicating, displacement type with external cages.

3.10 Instrument Air System

Branch headers will have a shutoff valve at the takeoff from the main header. The branch headers will be sized for the air usage of the instruments served, but will be no smaller than 3/8 inch. Each instrument air user will have a shutoff valve and filter at the instrument.

CHEMICAL ENGINEERING DESIGN CRITERIA

Chemical Engineering Design Criteria

1.0 Introduction

This appendix summarizes the codes, standards, criteria and practices that will be generally used in the design and installation of chemical engineering systems for the San Joaquin Solar 1 LLC and San Joaquin Solar 2 LLC Plants (SJS 1&2). More specific project information will be developed prior to construction of the project to support detailed design, engineering, material procurement specification and construction specifications as required by the California Energy Commission (CEC).

2.0 Codes and Standards

The design of the mechanical systems and components will be in accordance with the laws and regulations of the federal government, the State of California, County of Fresno and local ordinances, and industry standards. The most current issue or revision of rules, regulations, codes, ordinances, and standards at the time of filing this Application for Certification will apply, unless otherwise noted. If there are conflicts between cited documents, the more conservative requirements will apply.

The following codes and standards are applicable to the chemical aspects of the facility:

- ANSI-American National Standards Institute
- ANSI B31.1-Power Piping Code
- ASME-American Society of Mechanical Engineers
- ASME-Performance Test Code 31, Ion Exchange Equipment
- ASTM-American Society for Testing and Materials
- ASTM D859-94--Referee Method B for Silica as SiO2
- ASTM D888-96Referee Method A for Dissolved Oxygen
- ASTM D513-96Referee Method D for CO2
- OSHA-Occupational Safety and Health Administration
- UL-Underwriters Laboratories
- AWWA-American Waterworks Association
- WWA 2540-95-Method C for TDS

Other recognized standards will be used as required to serve as design, fabrication, and construction guidelines when not in conflict with the above listed standards.

The codes and industry standards used for design, fabrication, and construction will be the codes and industry standards, including all addenda, in effect as stated in equipment and construction purchase or contract documents.

3.0 General Criteria

3.1 Water Sources

Two sources of water will be used at SJS 1&2. One water source will be from a well that will provide water to a 2,000,000 gallon storage tank. The second source will be effluent from the city of Coalinga's proposed waste water treatment plant.

3.1.1 Circulating Water

Makeup water will be pumped from the raw water storage tank to the cooling tower basin as required. Water will be blown down from the basin to help maintain proper water chemistry, the cycles of concentration will be approximately 3. Acid will be added in proportion to makeup water flow for pH control. Chemical feed systems will also supply water-conditioning chemicals that minimize corrosion, scaling and biological growth.

3.1.3 Service Water and Sanitary Use Water

Raw water will be chlorinated for use at service water hose connections located around the facility and also as the supply of sanitary water (i.e. showers, sinks, toilets, safety showers, eye wash stations). Service water will be treated as necessary to meet all federal, state, and local requirements for human contact. Signs will be posted to alert personnel that sanitary water is not potable quality and should not be consumed.

3.1.4 Demineralized Water

Demineralized water will be produced by on-site treatment systems. . The demineralized water system will consist of a reverse osmosis (RO) system and a mixed-bed deionizer. The demineralized water will be stored in a 100,000 gallon demineralized water storage tank.

3.1.5 Construction Water

Water sources for construction will be trucked in or obtained from an onsite water supply well.

3.1.6 Fire Protection Water

Water for fire protection will be provided from the 2,000,000-gallon raw water tank by an electric pump, with an emergency diesel backup pump.

3.2 Chemical Storage

3.2.1 Storage Capacity

Chemical storage tanks will, in general, be sized to store a minimum of 1.5 times the normal bulk shipment. The aqueous ammonia storage tank for the SCR will be four (4) 20,000 gallon tanks.

3.2.2 Containment

Chemical storage tanks containing corrosive or hazardous fluids will be surrounded by curbing. Curbing and drain piping design will allow a spill of 110% of the full tank capacity without overflowing the curbing. For multiple tanks located within a single curbed area, the largest tank will be used to size the curbing and drain piping.

3.2.3 Closed Drains

Waste piping for volatile liquids and wastes with offensive odors will use closed drains to control noxious fumes and vapors.

3.2.4 Coatings

Tanks, piping, and curbing for chemical storage applications will be provided with appropriate protective coatings.

3.3 Wastewater Disposal

The process wastewater will be disposed to an evaporation pond.

3.4 Sanitary Water Disposal

Sanitary waste water will be routed to an on-site septic tank/drainfield installation.