GLINT AND GLARE STUDY

During operation, concentrated light from the Solar Collector Assemblies (SCA) will be directed at the Heat Collection Elements (E) in the parabolic structure, which is approximately 16' from ground level. Potential glare from light reflecting off of the absorber pipes is minimal. A full analysis is provided below.

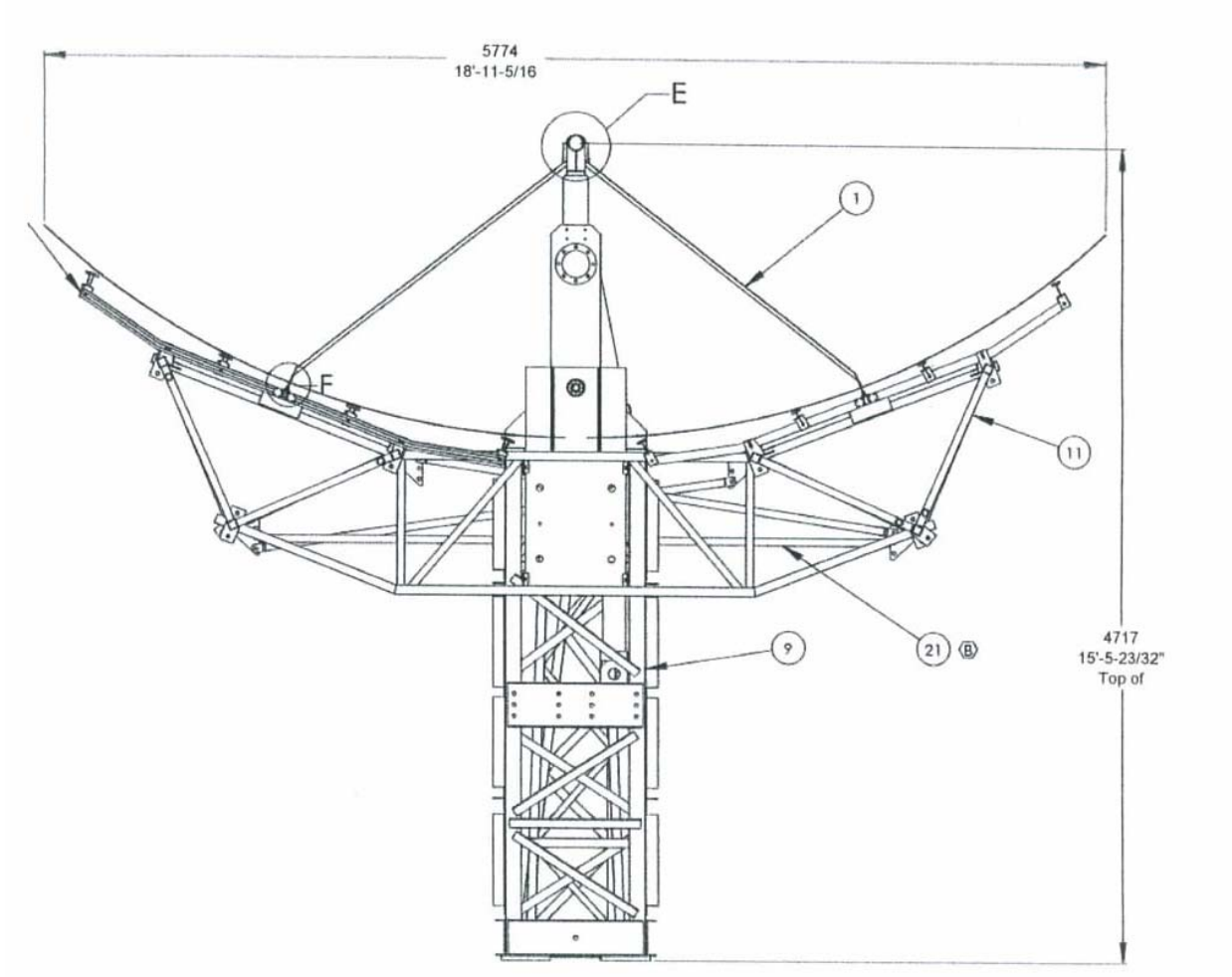

SCA MOTION CONTROL SYS END VIEW

E = Heat collection element	1 = HCE support	11 SCA Truss
F = HCE support connection	9 = Drive Pylon	21 V Truss Stifener

At peak performance, solar intensity on the Heat Collection Elements (HCE) will approach 30 kW/m^2. HCE absorptivity of the solar spectrum shall be 0.94; thus the intensity of reflected light from the HCEs= 1.8 kW/m2. The reflected light will be diffuse rather than specular, meaning that light will come off in random, scattered directions. If one approximates the Lambertian scatter as uniform beneath the HCE, the ability to estimate the intensity in the eyes of an observer at ground level is gained. The intensity drops off as a function of distance from the HCEs. Using 7mm as the width of the HCE and the half circumference defined by a radius of 9 ft from the HCE, the ratio for intensity decrease is 0.007: 53.4, or

0.0001. This means that the intensity of reflected light from receiver pipes is about 0.0001 * 1.8 kW/m2 = 0.0002 kW/m2, or roughly 150 times less than the intensity of the sun. This solar intensity is not deemed to be a hazard.

As SCAs move from a stow position into tracking position with light focused on HCEs, there is a possibility of a concentrated beam being directed horizontally to the east or west. The following is meant to clarify the issues of glare and glint off of the SCAs.

The focal length of the SCA is approximately 5 feet. It becomes apparent by viewing the figure above that beyond the focal length of the SCA, beam intensity decreases and by 10' from the SCA, beam intensity is the equivalent of the incident solar intensity.

While horizontal glare to the east and west are possible any time of day as the SCAs rotate from stow into tracking position, the tracking system and operational protocols for the plant are designed to minimize this. During cleaning activities, adjacent SCA rows will be rolled to face each other, with the outside rows facing inward, both to prevent horizontal glare and also to allow cleaning crews to work on two rows at once and increase efficiency. SCA rows are stowed facing the ground and thus glare will not occur during off hours. During tracking, SCAs will be oriented to direct light towards the HCE structure; should the beams just miss the HCE, by the nature of the system focal distance, the beams will be diverged back to incident solar intensity at 10' above the SCA structure. There are two conditions identified in which horizontal glare could occur:

1) SCAs rotating from stow position to tracking position.
2) Tracking system malfunction or failure, where SCA rows go to an incorrect position or freeze up while directing a beam horizontally.

Condition (1) may occur at the beginning and end of daily plant operations. It is believed that Condition (2) will be a rare occurrence and will be mitigated by full time maintenance crews who will repair stalled motors. Glare potential from Condition (1) and its effect on nearby residences, surrounding roads, public access areas, and structures will be considered.

In addition to these structures and locations, there may be pedestrians who venture close to the property line. The following table shows the calculated beam intensity at a given distance from the plant boundary and also the time it would take the beam to move across 6 feet (the estimated height of a man), at that distance with the motor rotating the SCA at 0.2 RPM. Note that these estimates are assuming 1 kW/m^2 sun intensity.

Table 1
Computed beam intensity and speed at various distances from plant boundary

Distance from Plant Boundary (ft)	Beam intensity (kW/m2)	6' travel time (s)	Affected party, location
0	3.67	9.5	-
20	5.44	5.7	-
40	7.22	4.1	-
60	4.00	3.2	-
80	1.89	2.6	-
100	1.24	2.2	-
200	0.46	1.2	State Hospital
150	0.6	2.0	Jayne Ave

Potential glare for drivers on West Jayne Ave is anticipated to be less than half of the glare from the sun. Conservatively estimating the aperture of a driver's eye to be 1-inch, glare would move across the eye in less than 1/100 of a second. Because West Jayne Ave is to the north of the plant and the SCAs are unable to direct sunlight to the north given they track only east and west, it will be impossible to direct a beam to West Jayne Ave.

It should be noted that pedestrians who are standing within 60 feet of the outside of the plant perimeter fence to the east, or west may see a beam intensity as high or higher than what is recommended as a safe level on the human retina. A level deemed safe for the human eye is 4.5 kW/m2[1]. For this reason, the plant will install privacy slats in the perimeter fence to ensure that pedestrians are not exposed.

Vertical glare from the SCAs during operational activities was addressed above. Vertical glare may also be possible during construction, when SCAs are stored with glass facing upward. However, as seen in the table above, the beam intensity at 20' high is less than that of the sun. The risk to passing planes is considered to be negligible.

Additional glare may occur off of standard construction equipment such as cranes, trucks, or forklifts, but this would not be expected to exceed the intensity of incident sunlight.

The possibility of dust drifting in between the receiver and SCA and being illuminated by light rays coming from the SCAs and focusing down does not exist.