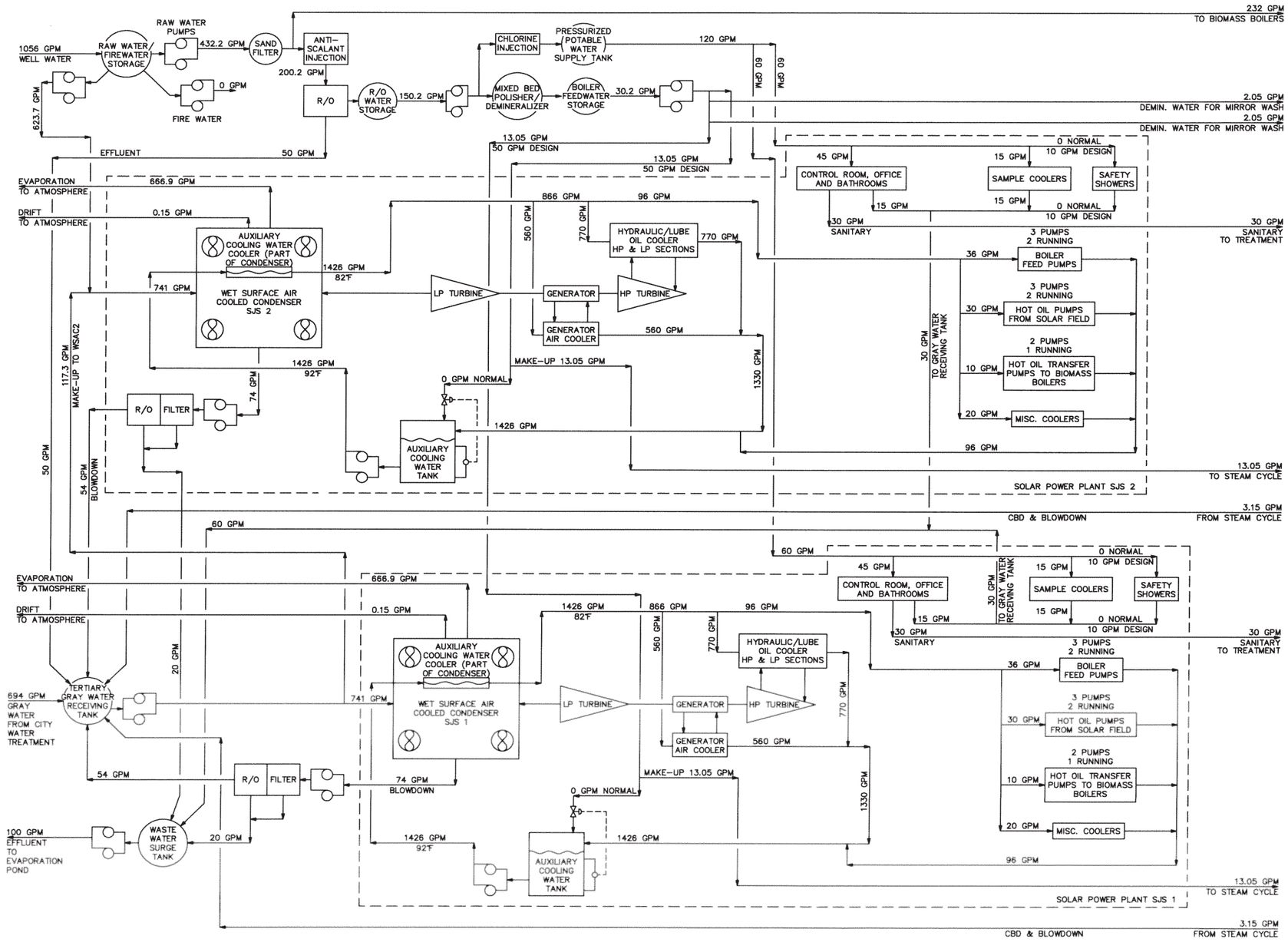

SOURCE:
Ford, Davis and Bacon (drawing 2009)

REVISED - WATER BALANCE
SAN JOAQUIN SOLAR 1 & 2

URS	NO SCALE	CREATED BY: CM	DATE: 01-26-09	FIG. NO:
		PM: AR	PROJ. NO: 27658031	5.5-3