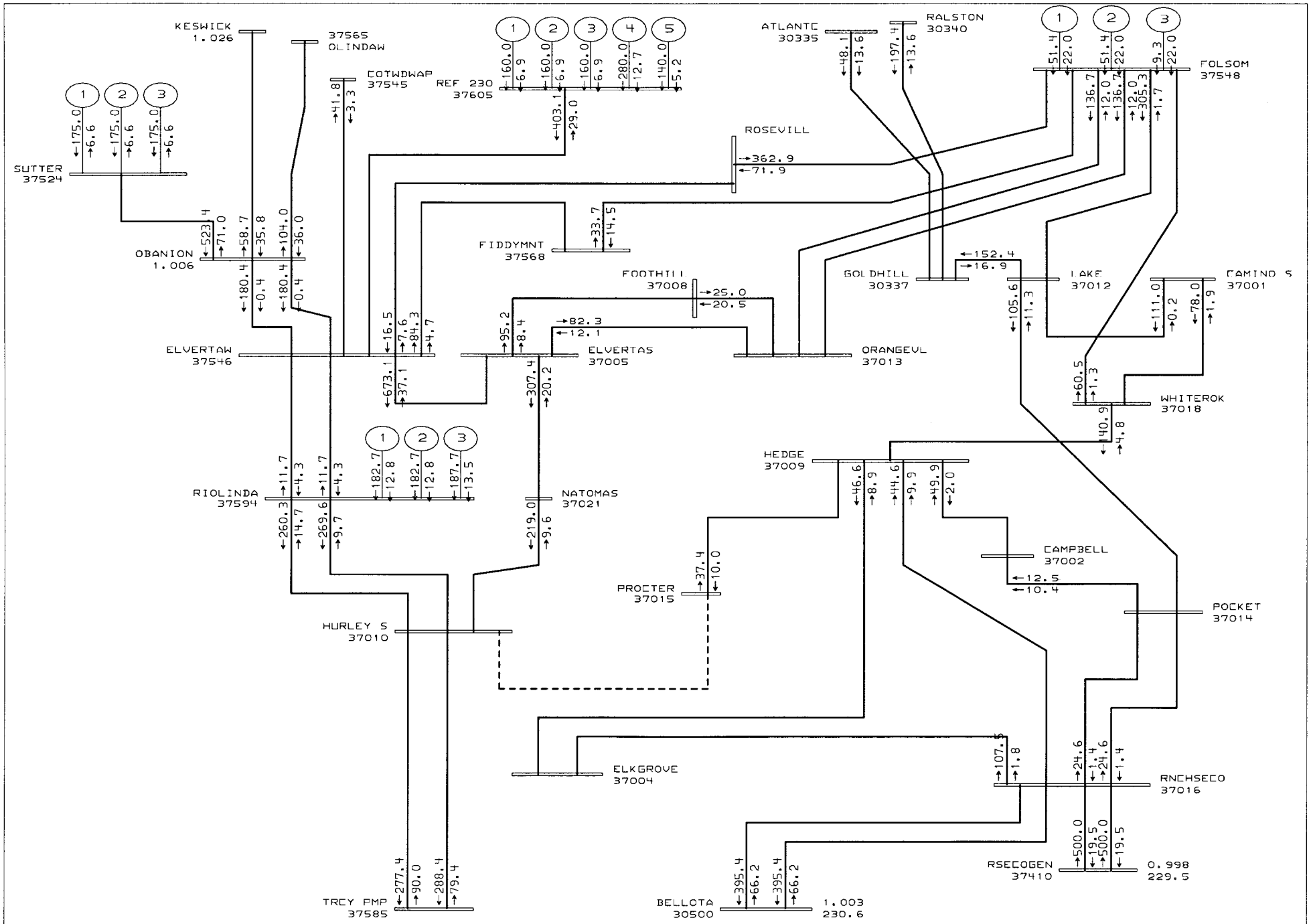

General Electric International, Inc. PSLF Program MW/MVAR Thu Jan 24 15:11:57 2002

SMUD

2005 SPRING PEAK PG&E CASE, Add 1000 Cosumnes Power Plant at Rancho Seco
PATH 15=1418MW (N-S) PATH26=2997MW (N-S) PATH65=2522MW (N-S) COI=1734MW (N-S)
Added REF @ 900MW output

d:\pslfdata\drw\refwithrs.drw
d:\pslfdata\sav\t.sav
Rating = 1

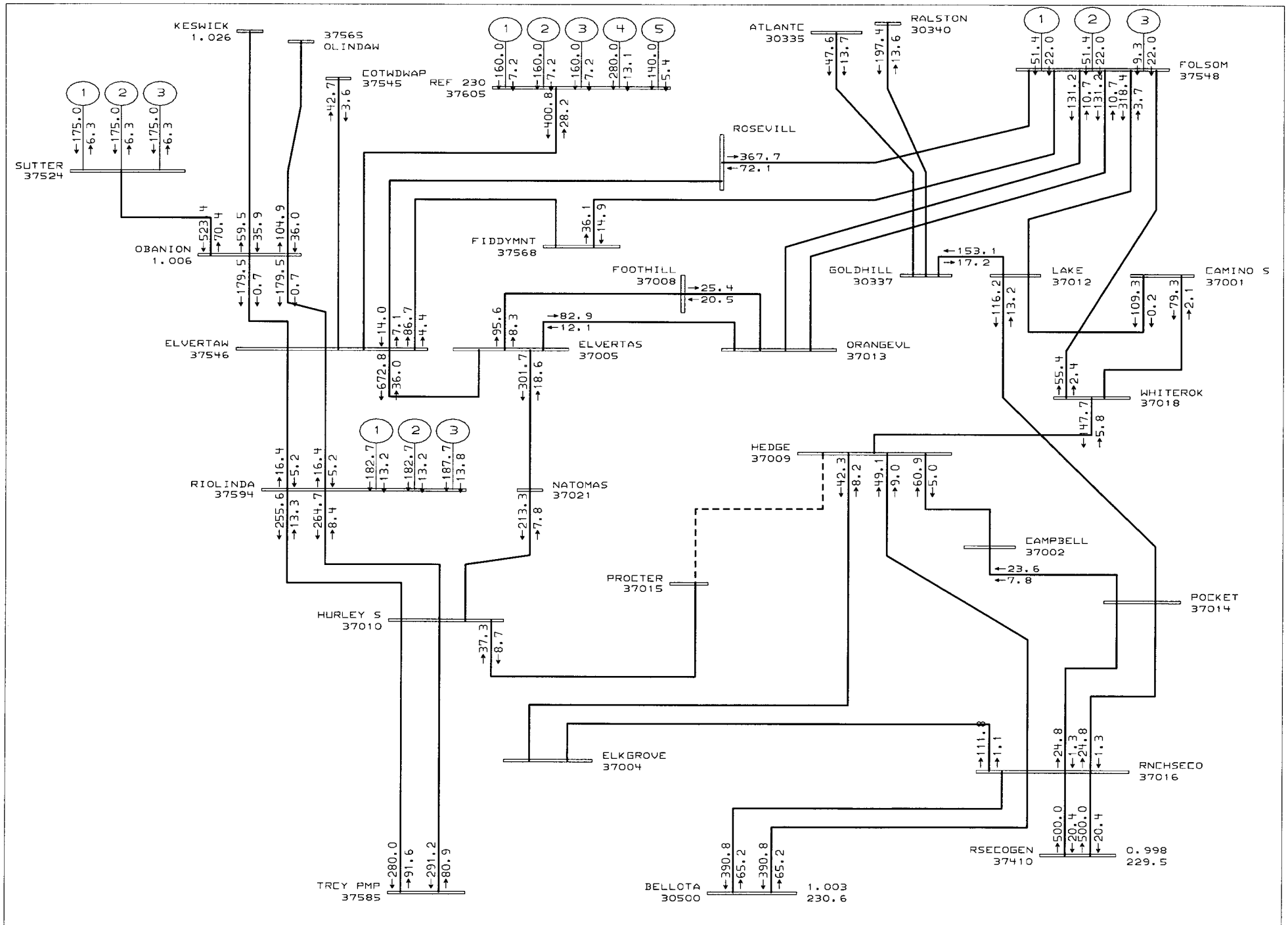

General Electric International, Inc. PSLF Program MW/MVAR Thu Jan 24 15:12:34 2002

SMUD

2005 SPRING PEAK PG&E CASE, Add 1000 Cosumnes Power Plant at Rancho Seco
PATH 15=1418MW (N-S) PATH26=2997MW (N-S) PATH65=2522MW (N-S) COI=1734MW (N-S)
Added REF @ 900MW output

d:\pslfdata\drw\refwithrs.drw
d:\pslfdata\sav\t.sav
Rating = 1

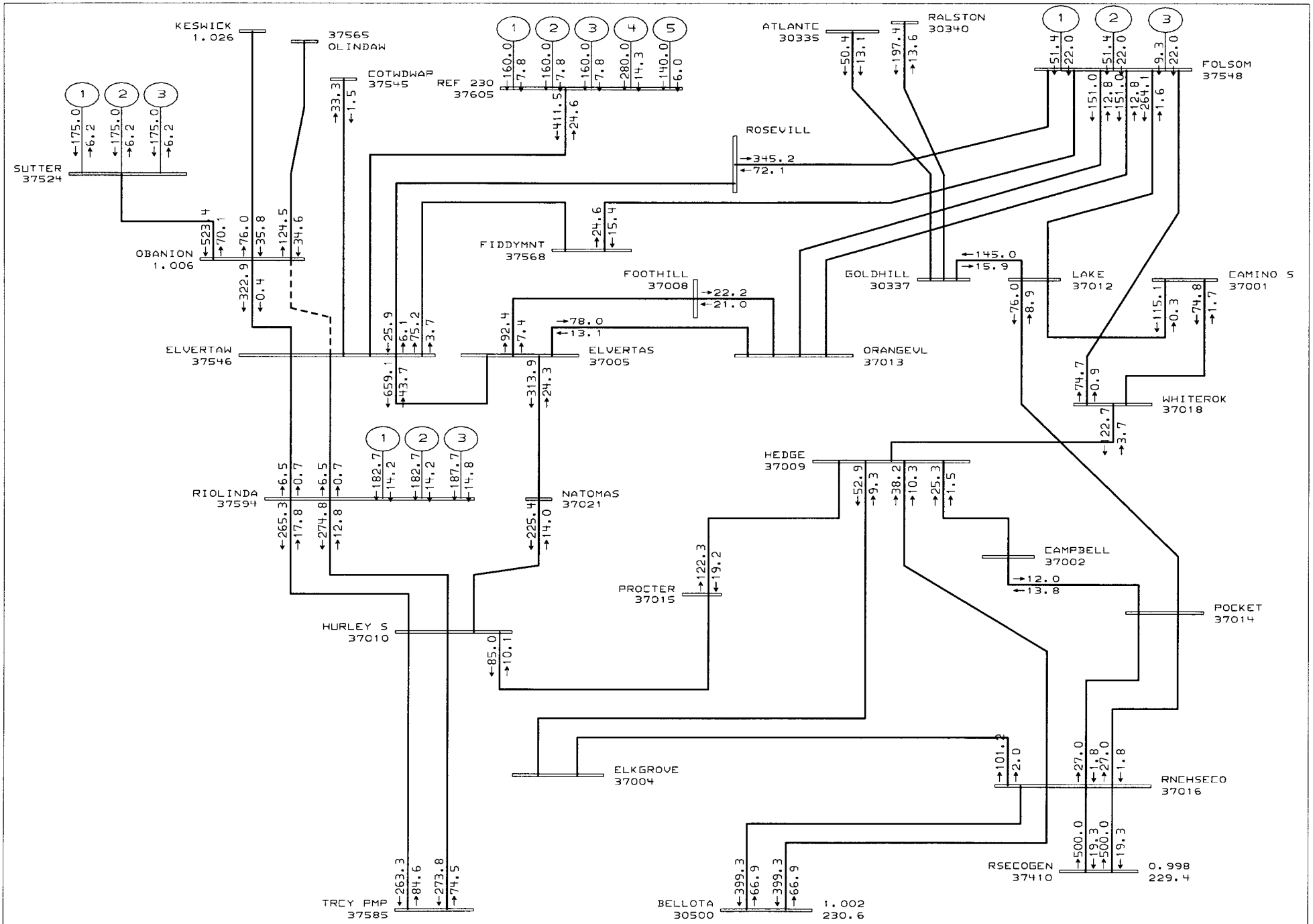

General Electric International, Inc. PSLF Program MW/MVAR Thu Jan 24 15:13:09 2002

SMUD

2005 SPRING PEAK PG&E CASE, Add 1000 Cosumnes Power Plant at Rancho Seco
PATH 15=1418MW (N-S) PATH26=2997MW (N-S) PATH65=2522MW (N-S) COI=1734MW (N-S)
Added REF @ 900MW output

d:\pslfdata\drw\refwithrs.drw
d:\pslfdata\sav\t.sav
Rating = 1

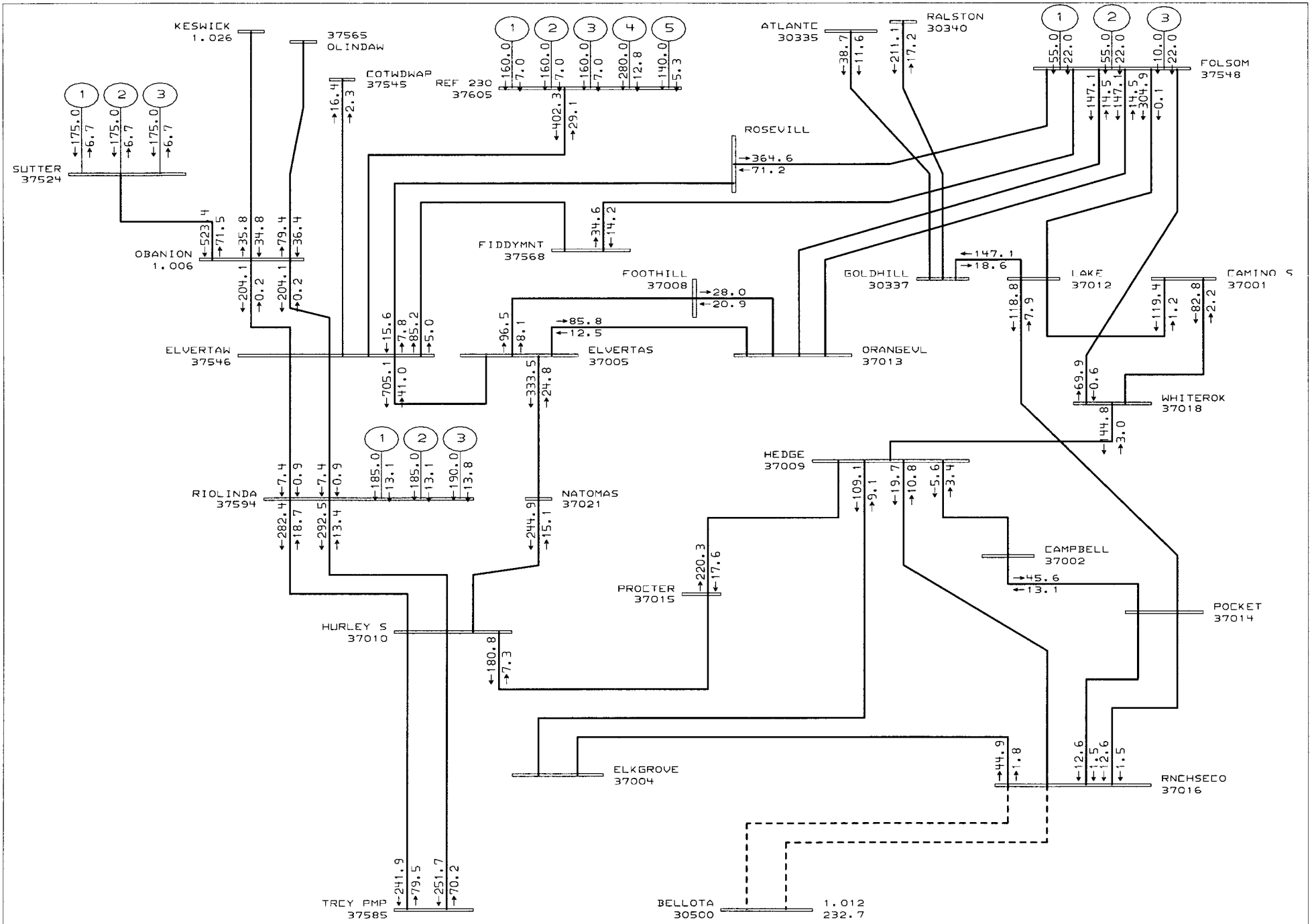

General Electric International, Inc. PSLF Program MW/MVAR Thu Jan 24 14:24:56 2002

SMUD

2005 SPRING PEAK PG&E CASE
PATH 15=1418MW (N-S) PATH26=2997MW (N-S) PATH65=2522MW (N-S) COI=1734MW (N-S)
Added REF @ 900MW output

d:\pslfdata\drw\ref.drw
d:\pslfdata\sav\05spr_wref.sav
Rating = 1

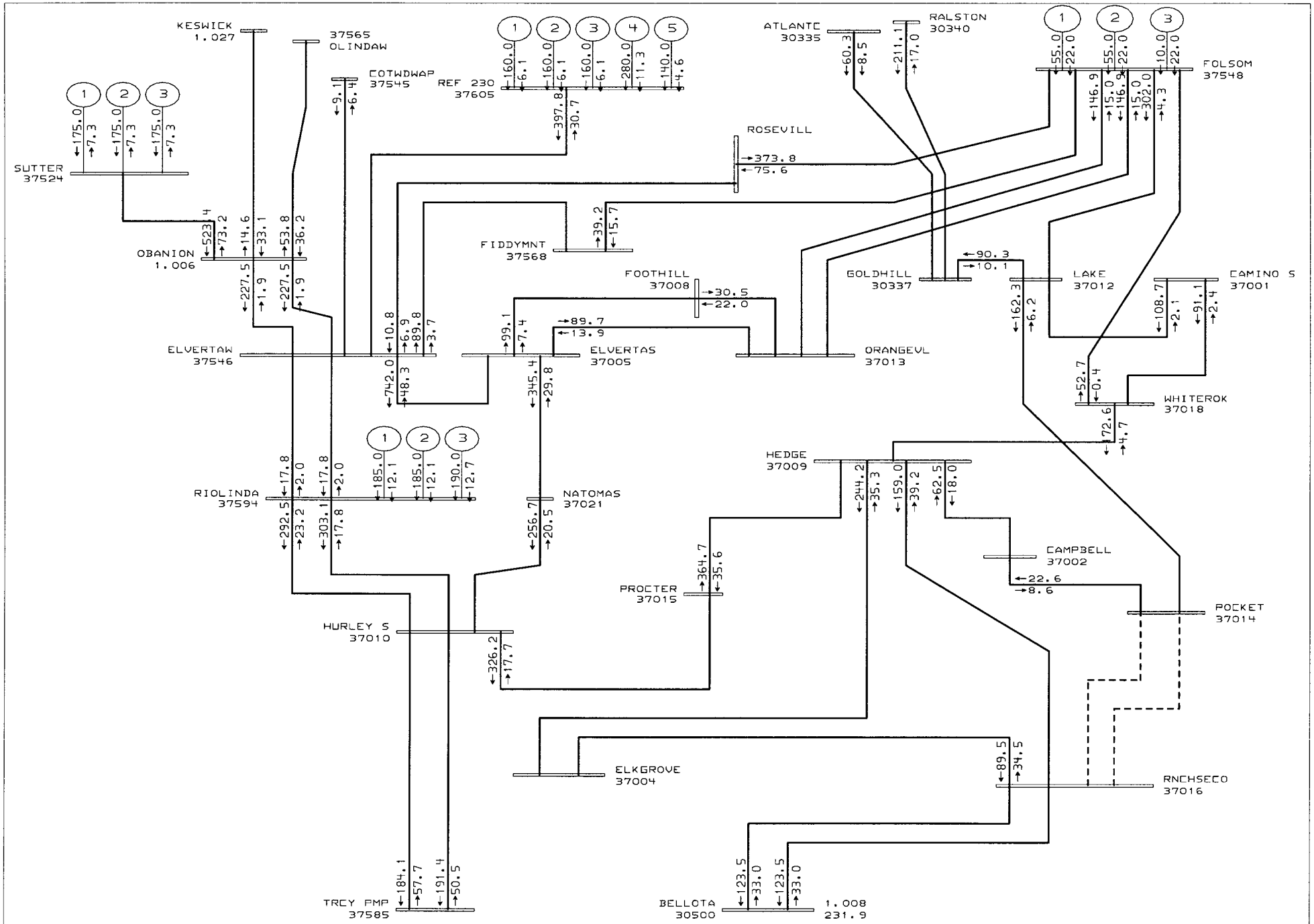

General Electric International, Inc. PSLF Program MW/MVAR Thu Jan 24 14:26:45 2002

SMUD

2005 SPRING PEAK PG&E CASE
PATH 15=1418MW (N-S) PATH26=2997MW (N-S) PATH65=2522MW (N-S) COI=1734MW (N-S)
Added REF @ 900MW output

d:\pslfdata\drw\ref.drw
d:\pslfdata\sav\05spr_wref.sav
Rating = 1

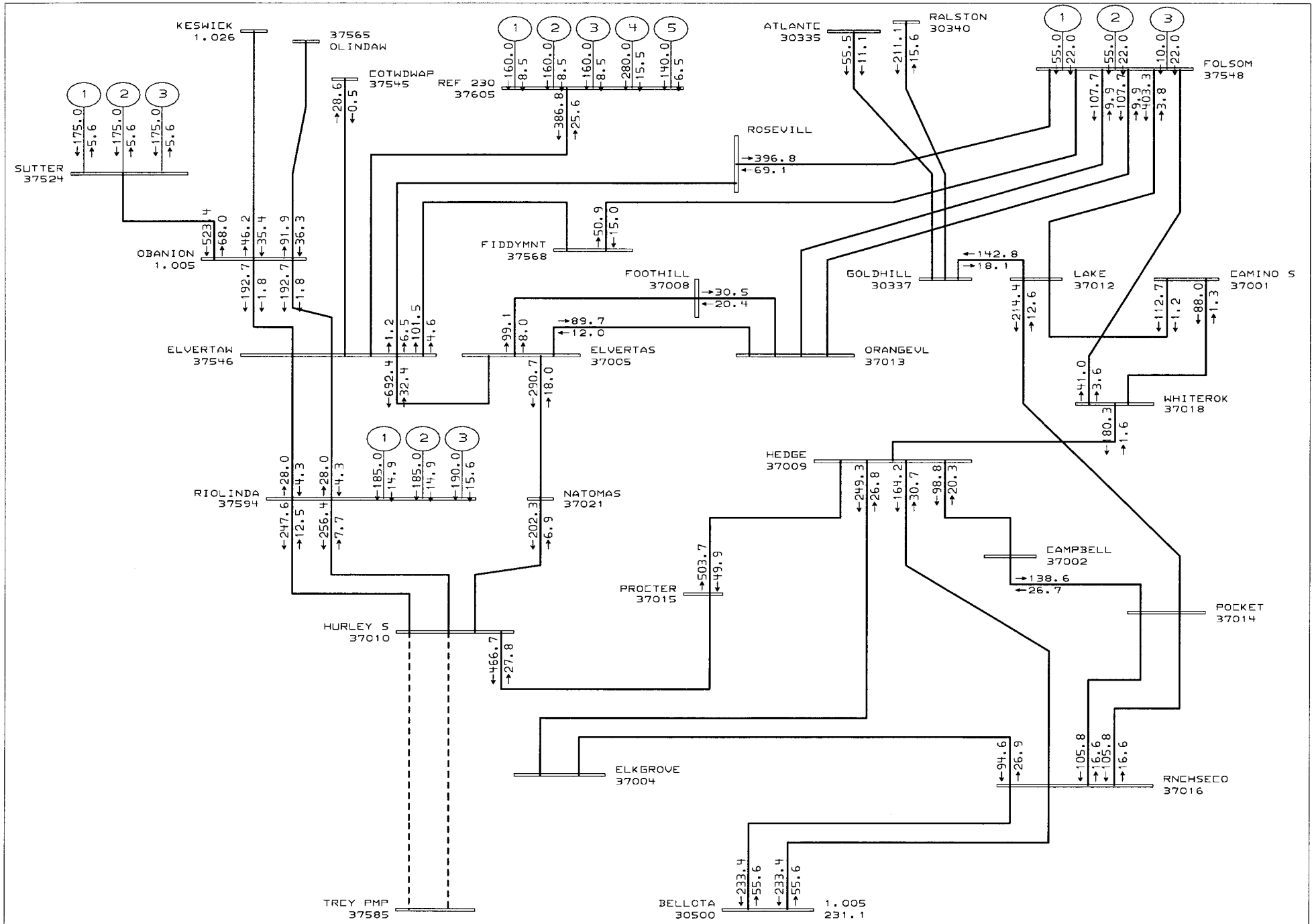

General Electric International, Inc. PSLF Program MW/MVAR Thu Jan 24 14:27:54 2002

SMUD

2005 SPRING PEAK PG&E CASE
PATH 15=1418MW (N-S) PATH26=2997MW (N-S) PATH65=2522MW (N-S) COI=1734MW (N-S)
Added REF @ 900MW output

d:\pslfdata\drw\ref.drw
d:\pslfdata\sav\05spr_wref.sav
Rating = 1

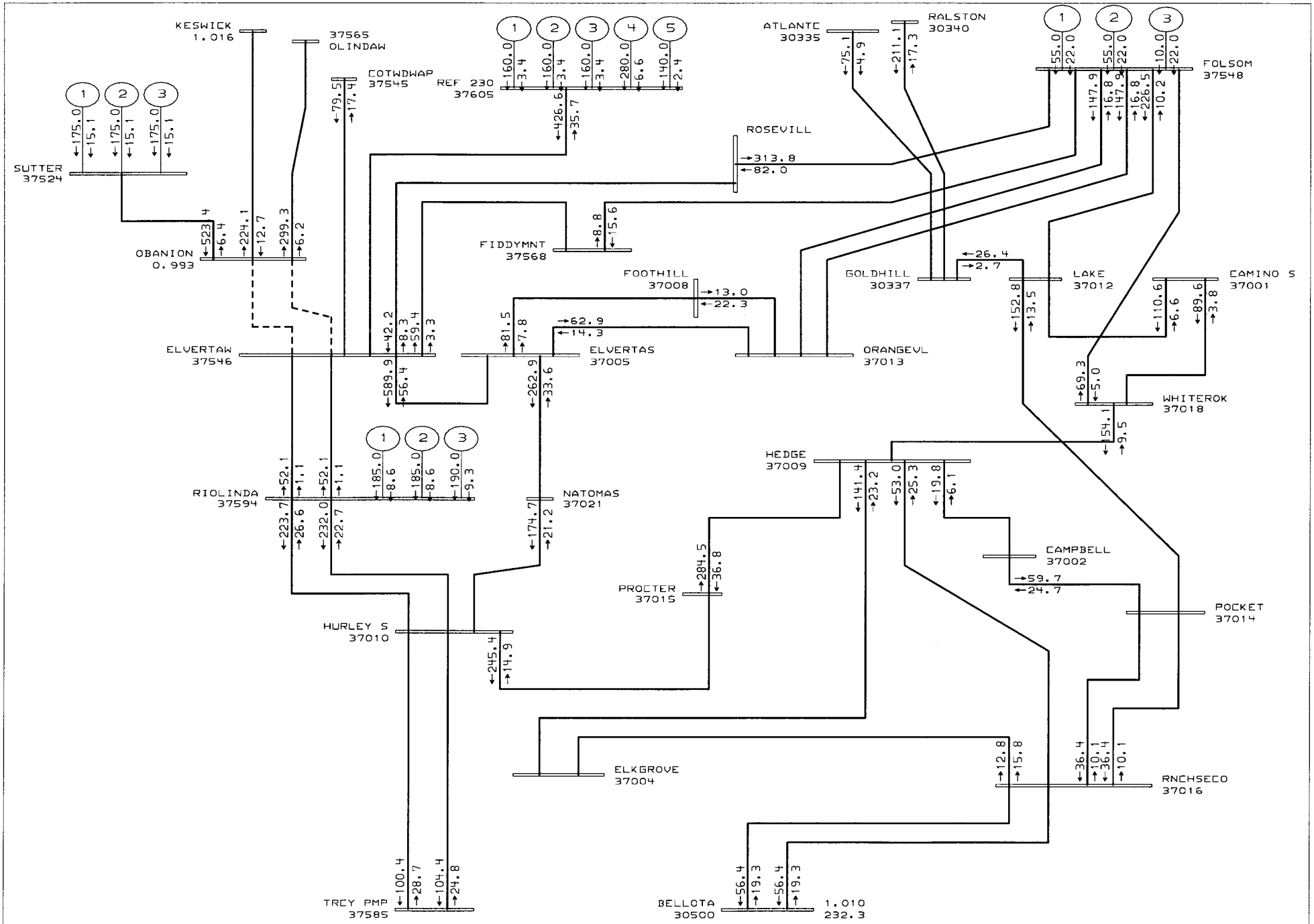

General Electric International, Inc. PSLF Program MW/MVAR Thu Jan 24 14:28:41 2002

SMUD

2005 SPRING PEAK PG&E CASE
PATH 15=1418MW (N-S) PATH26=2997MW (N-S) PATH65=2522MW (N-S) COI=1734MW (N-S)
Added REF @ 900MW output

d:\pslfdata\drw\ref.drw
d:\pslfdata\sav\05spr_wref.sav
Rating = 1

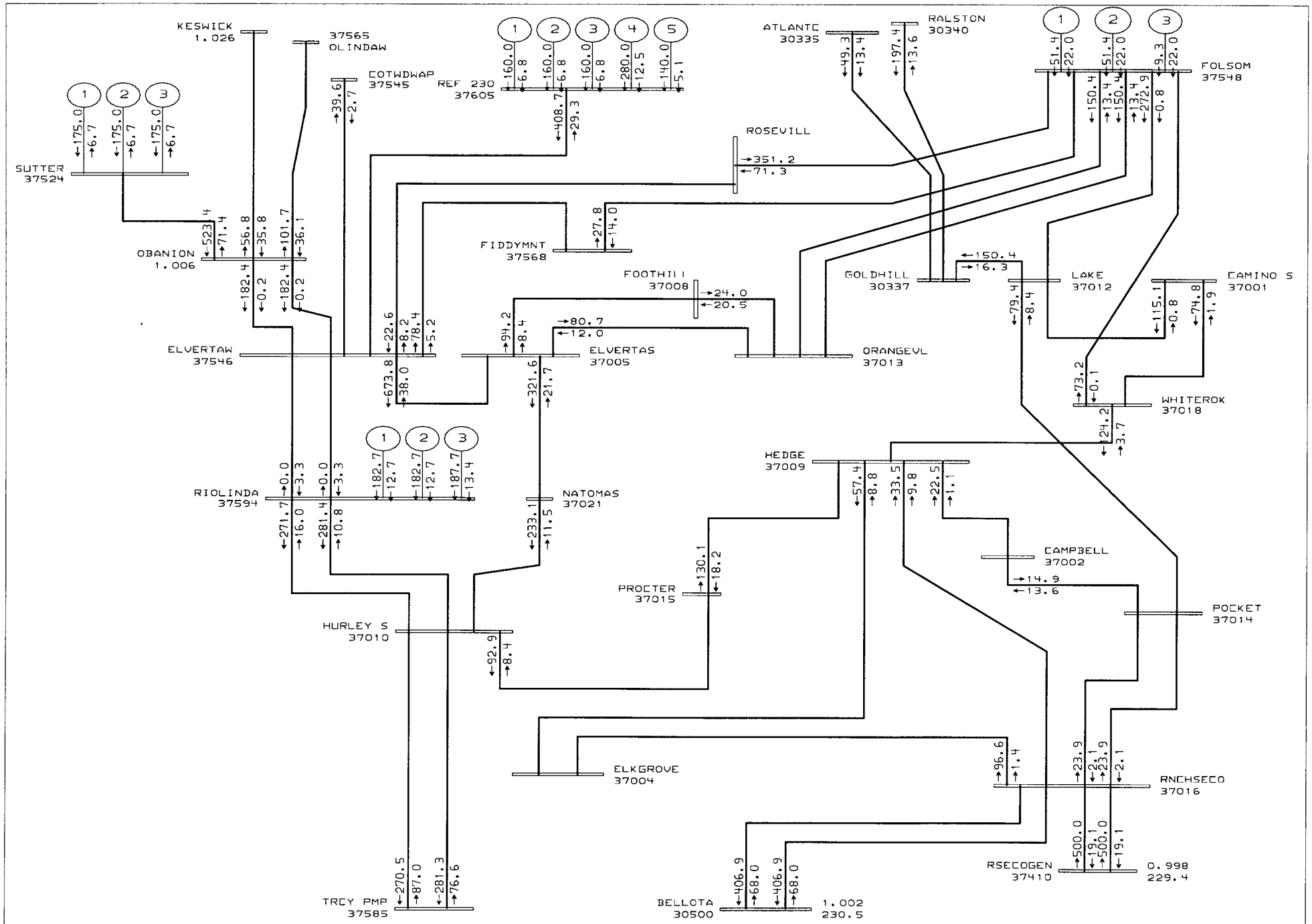

General Electric International, Inc. PSLF Program MW/MVAR Thu Jan 24 14:30:34 2002

SMUD

2005 SPRING PEAK PG&E CASE, Add 1000 Cosumnes Power Plant at Rancho Seco
PATH 15=1418MW (N-S) PATH26=2997MW (N-S) PATH65=2522MW (N-S) COI=1734MW (N-S)
Added REF @ 900MW output

d:\pslfdata\drw\refwithrs.drw
d:\pslfdata\sav\t.sav
Rating = 1

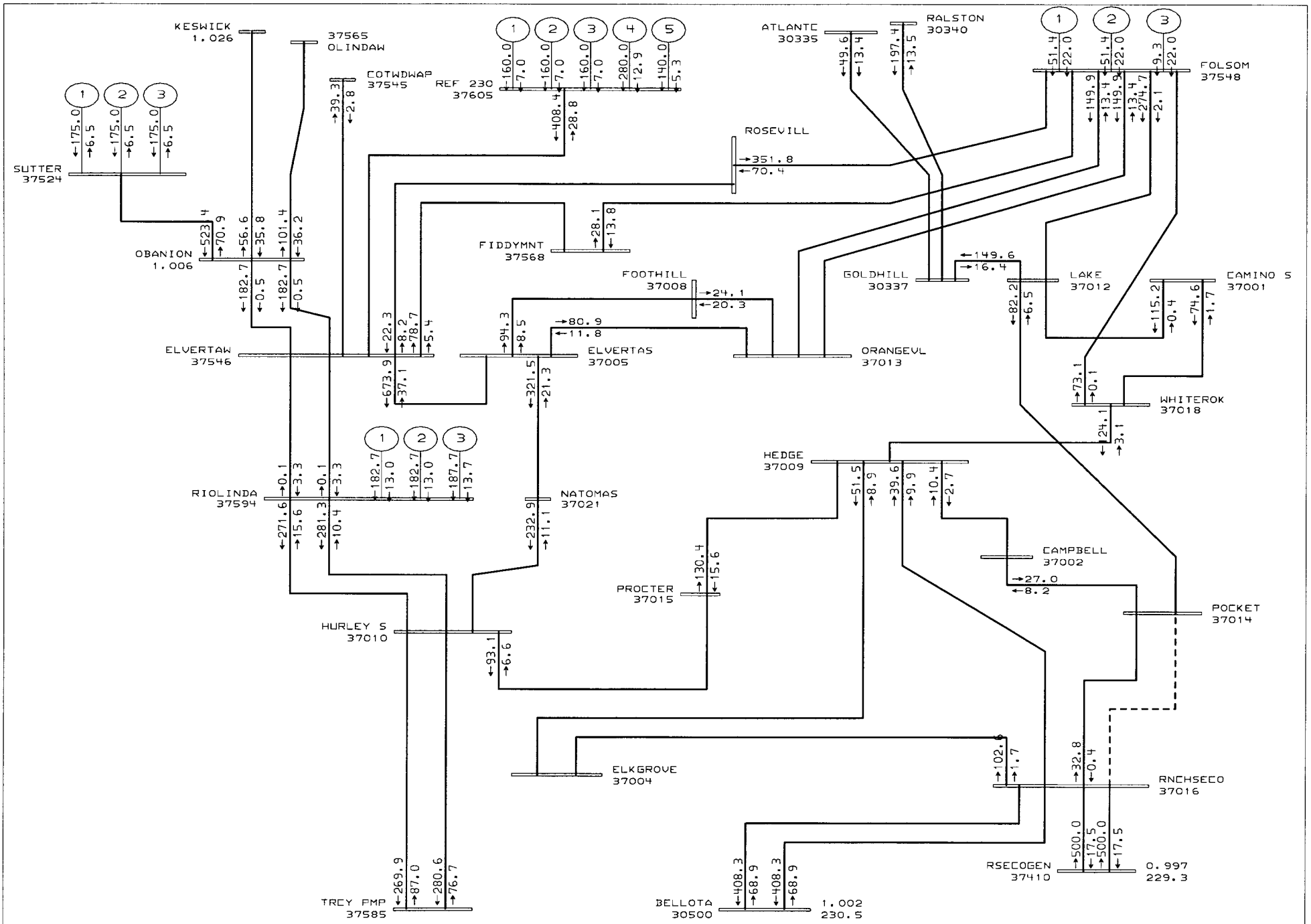

General Electric International, Inc. PSLF Program MW/MVAR Thu Jan 24 15:04:56 2002

SMUD

2005 SPRING PEAK PG&E CASE, Add 1000 Cosumnes Power Plant at Rancho Seco
PATH 15=1418MW (N-S) PATH26=2997MW (N-S) PATH65=2522MW (N-S) COI=1734MW (N-S)
Added REF @ 900MW output

d:\pslfdata\drw\refwithrs.drw
d:\pslfdata\sav\t.sav
Rating = 1

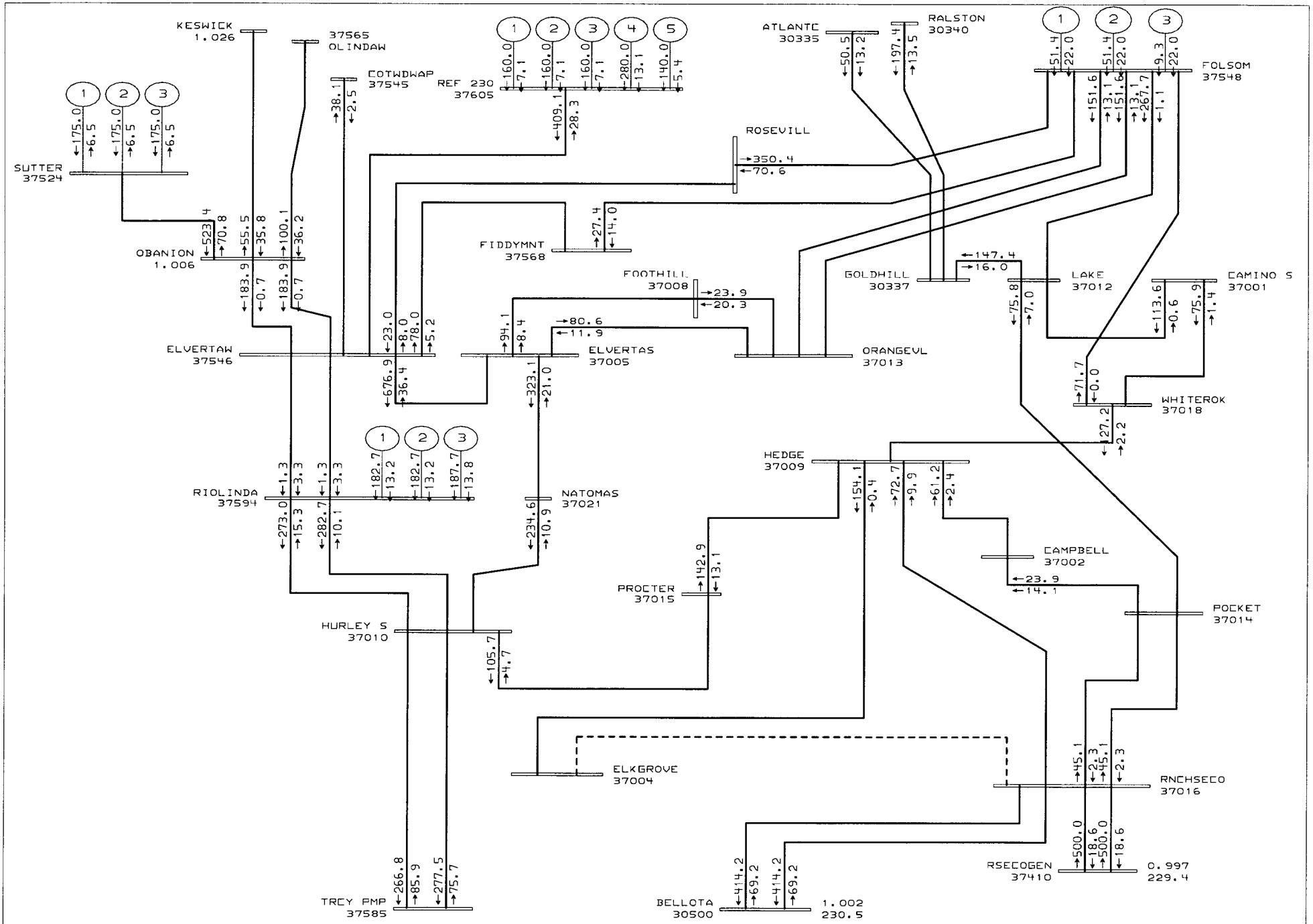

General Electric International, Inc. PSLF Program MW/MVAR Thu Jan 24 15:04:16 2002

SMUD

2005 SPRING PEAK PG&E CASE, Add 1000 Cosumnes Power Plant at Rancho Seco
PATH 15=1418MW (N-S) PATH26=2997MW (N-S) PATH65=2522MW (N-S) COI=1734MW (N-S)
Added REF @ 900MW output

d:\pslfdata\drw\refwithrs.drw
d:\pslfdata\sav\t.sav
Rating = 1

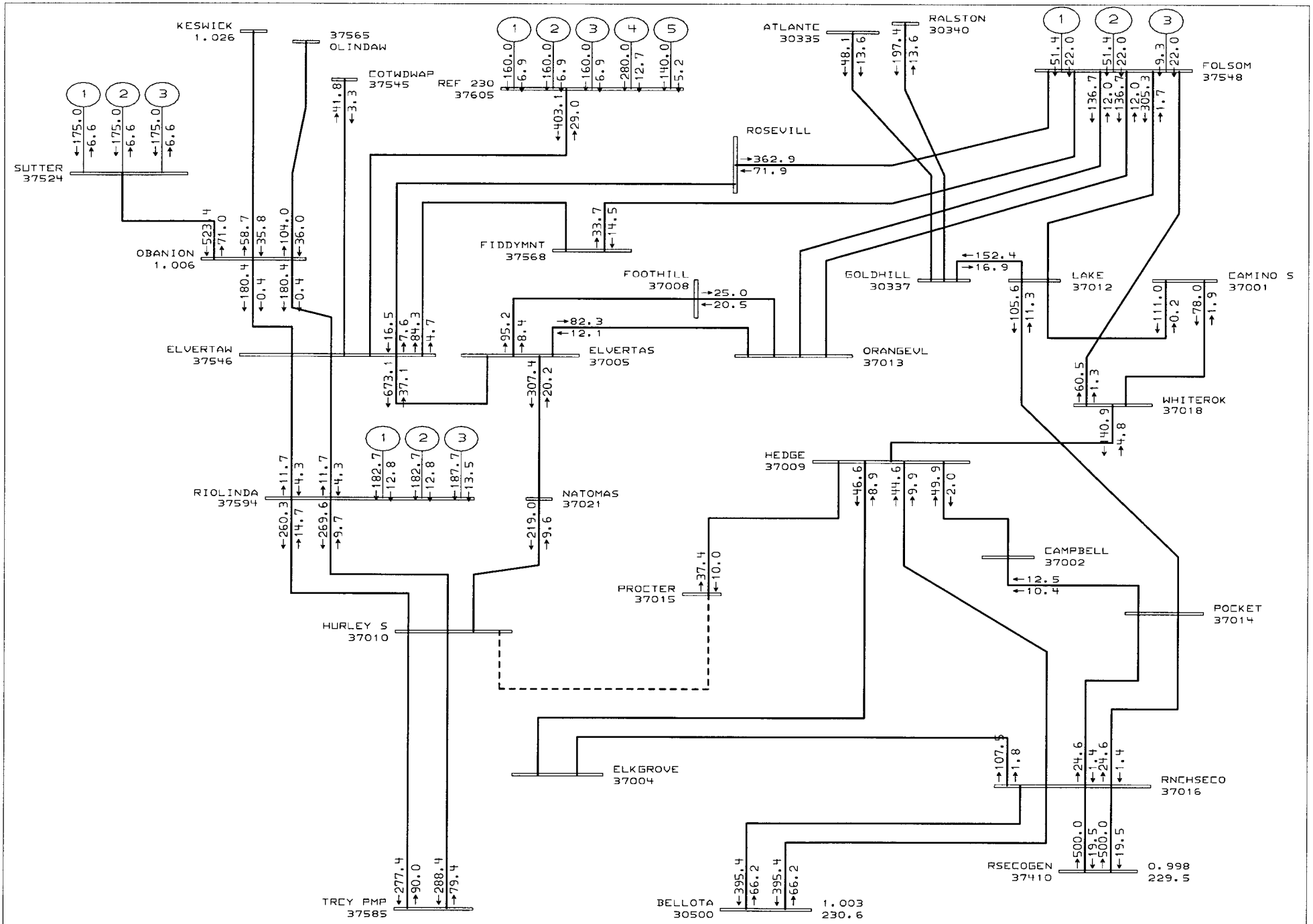

General Electric International, Inc. PSLF Program MW/MVAR Thu Jan 24 14:58:00 2002

SMUD

2005 SPRING PEAK PG&E CASE, Add 1000 Cosumnes Power Plant at Rancho Seco
PATH 15=1418MW (N-S) PATH26=2997MW (N-S) PATH65=2522MW (N-S) EOI=1734MW (N-S)
Added REF @ 900MW output

d:\pslfdata\drw\refwithrs.drw
d:\pslfdata\sav\t.sav
Rating = 1

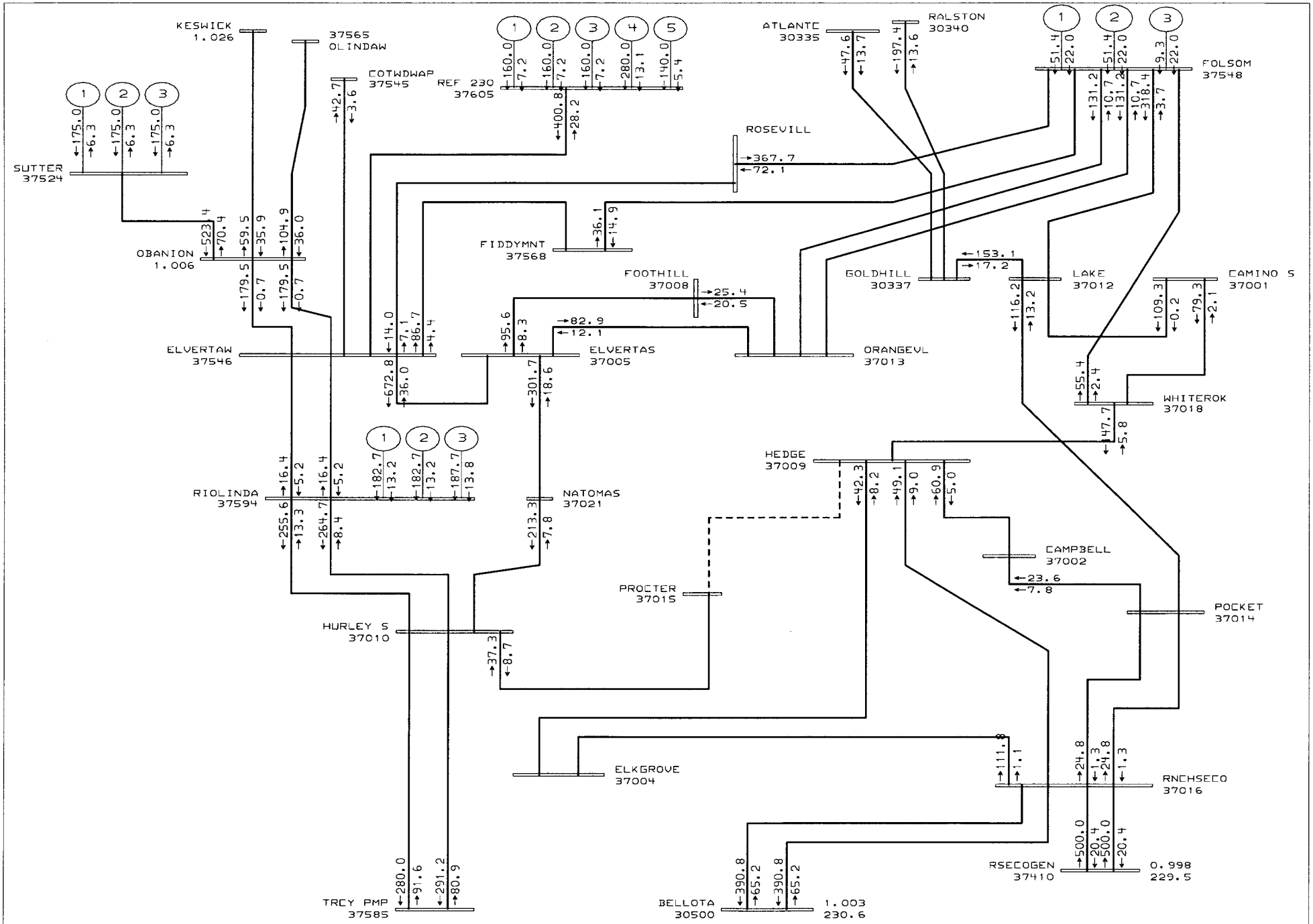

General Electric International, Inc. PSLF Program MW/MVAR Thu Jan 24 14:57:17 2002

SMUD

2005 SPRING PEAK PG&E CASE, Add 1000 Cosumnes Power Plant at Rancho Seco
PATH 15=1418MW (N-S) PATH26=2997MW (N-S) PATH65=2522MW (N-S) COI=1734MW (N-S)
Added REF @ 900MW output

d:\pslfdata\drw\refwithrs.drw
d:\pslfdata\sav\t.sav
Rating = 1

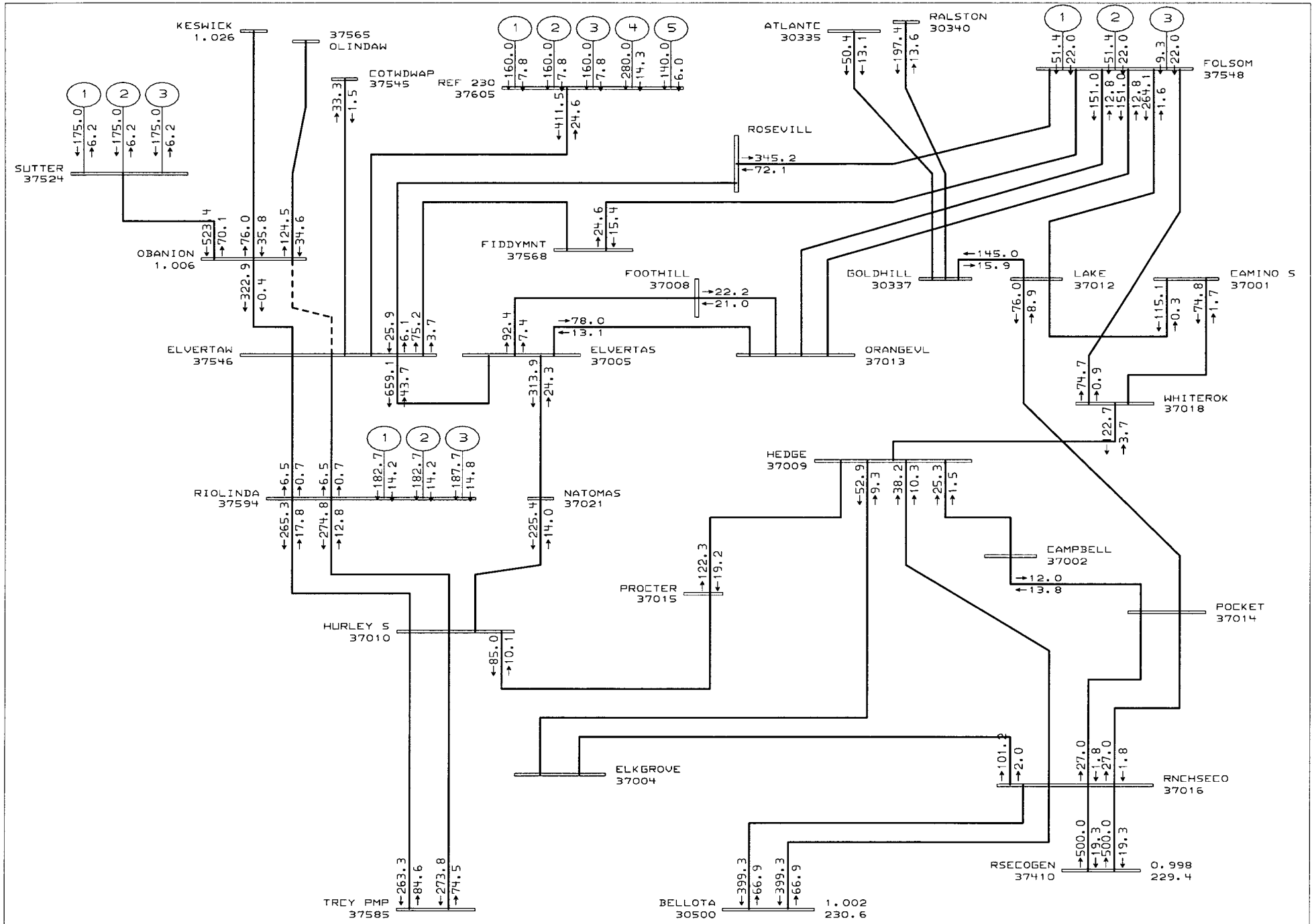

General Electric International, Inc. PSLF Program MW/MVAR Thu Jan 24 14:55:43 2002

SMUD

2005 SPRING PEAK PG&E CASE, Add 1000 Cosumnes Power Plant at Rancho Seco
PATH 15=1418MW (N-S) PATH26=2997MW (N-S) PATH65=2522MW (N-S) COI=1734MW (N-S)
Added REF @ 900MW output

d:\pslfdata\drw\refwithrs.drw
d:\pslfdata\sav\t.sav
Rating = 1

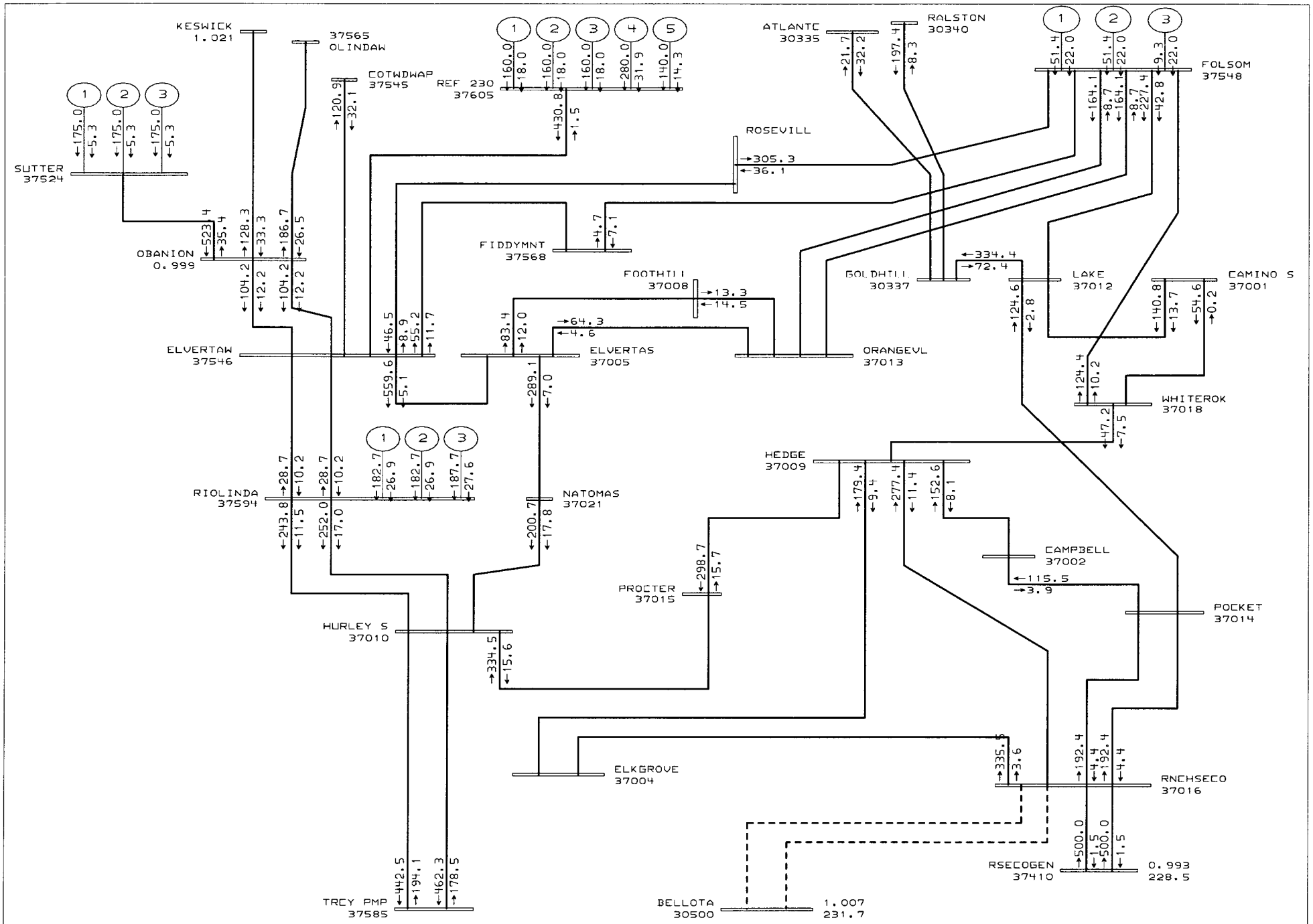

General Electric International, Inc. PSLF Program MW/MVAR Thu Jan 24 14:31:17 2002

SMUD

2005 SPRING PEAK PG&E CASE, Add 1000 Cosumnes Power Plant at Rancho Seco
PATH 15=1418MW (N-S) PATH26=2997MW (N-S) PATH65=2522MW (N-S) COI=1734MW (N-S)
Added REF @ 900MW output

d:\pslfdata\drw\refwithrs.drw
d:\pslfdata\sav\t.sav
Rating = 1

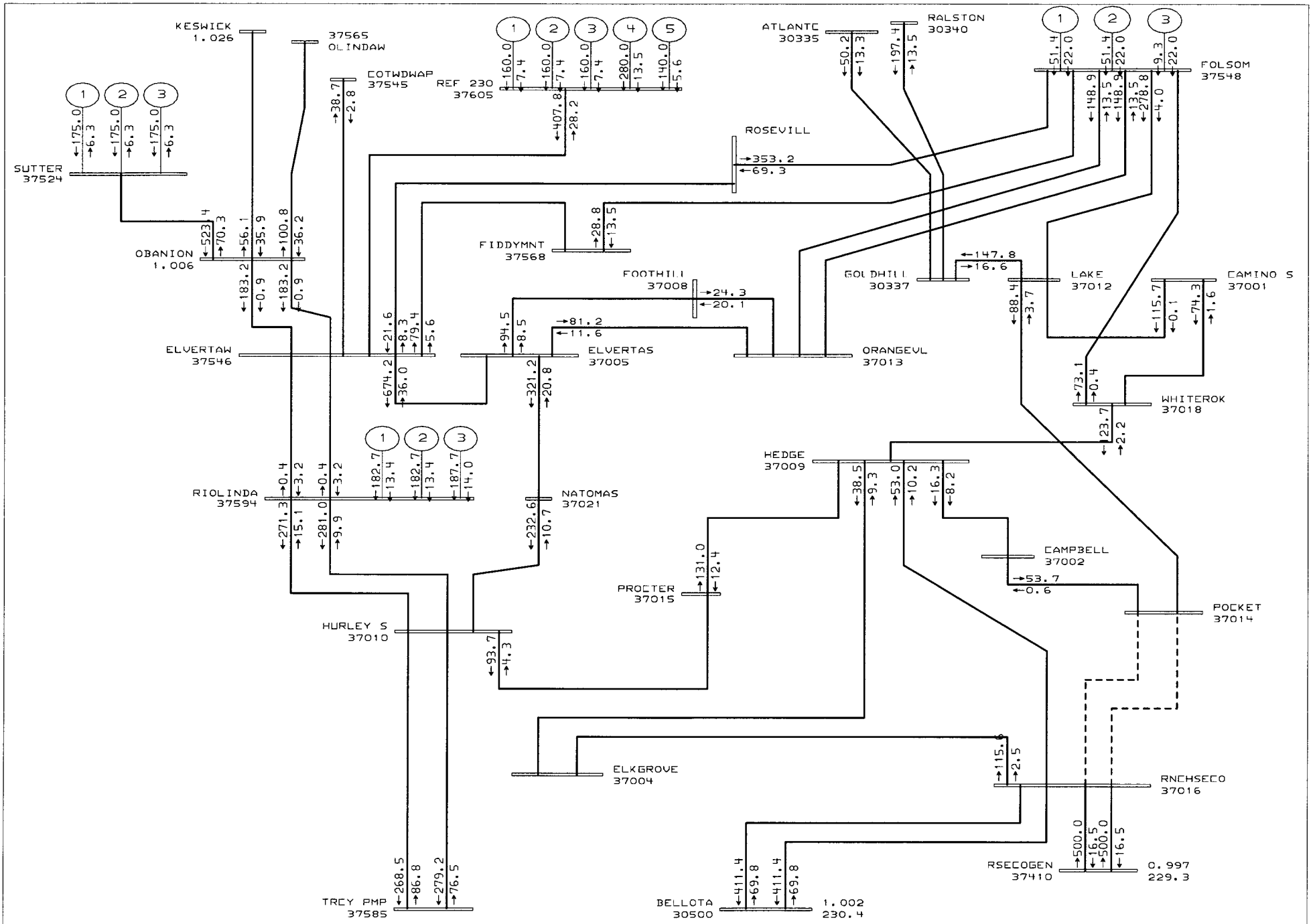

General Electric International, Inc. PSLF Program MW/MVAR Thu Jan 24 14:31:55 2002

SMUD

2005 SPRING PEAK PG&E CASE, Add 1000 Cosumnes Power Plant at Rancho Seco
PATH 15=1418MW (N-S) PATH26=2997MW (N-S) PATH65=2522MW (N-S) COI=1734MW (N-S)
Added REF @ 900MW output

d:\pslfdata\drw\refwithrs.drw
d:\pslfdata\sav\t.sav
Rating = 1

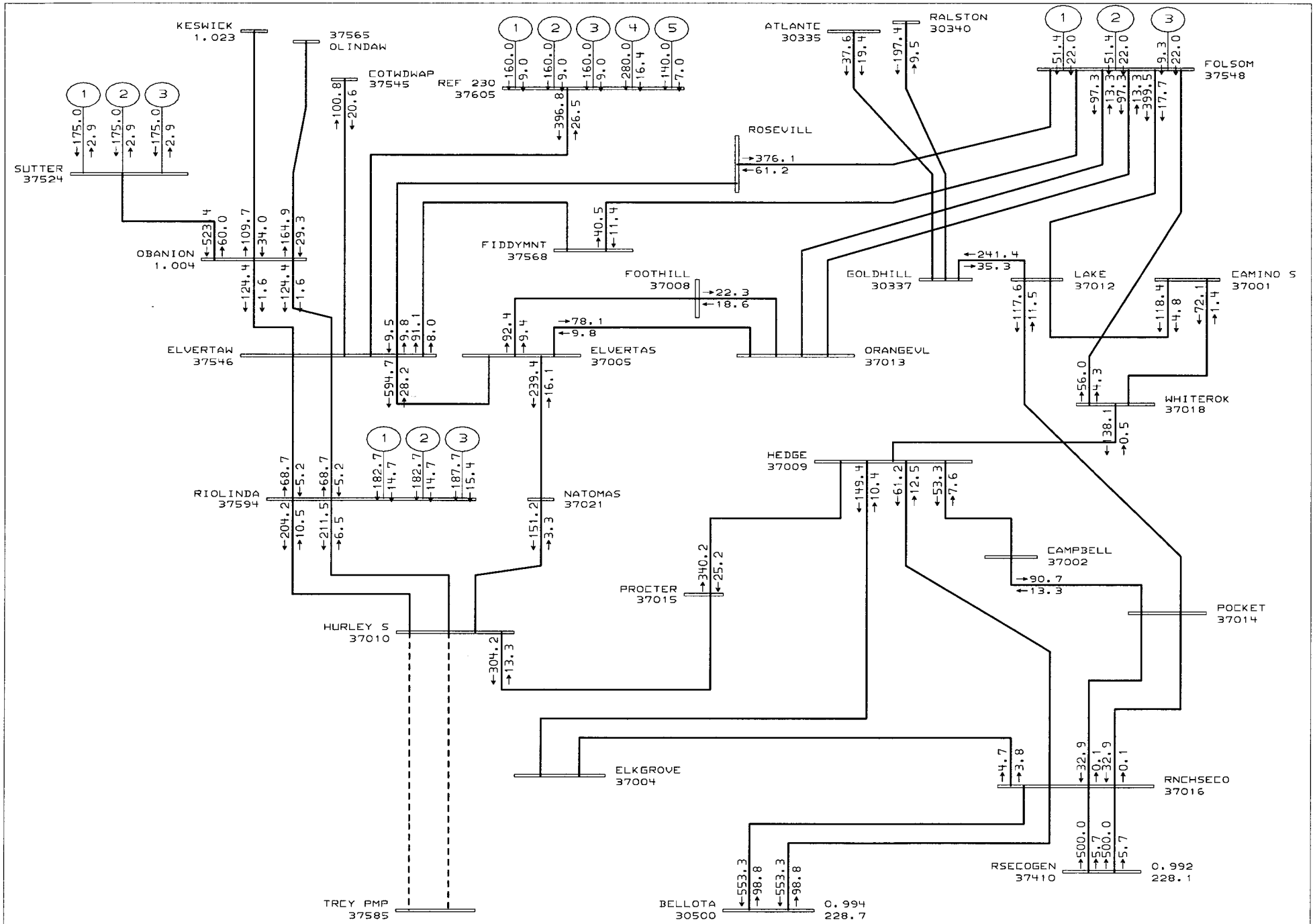

General Electric International, Inc. PSLF Program MW/MVAR Thu Jan 24 14:32:44 2002

SMUD

2005 SPRING PEAK PG&E CASE, Add 1000 Cosumnes Power Plant at Rancho Seco
PATH 15=1418MW (N-S) PATH26=2997MW (N-S) PATH65=2522MW (N-S) EOI=1734MW (N-S)
Added REF @ 900MW output

d:\pslfdata\drw\refwithrs.drw
d:\pslfdata\sav\t.sav
Rating = 1

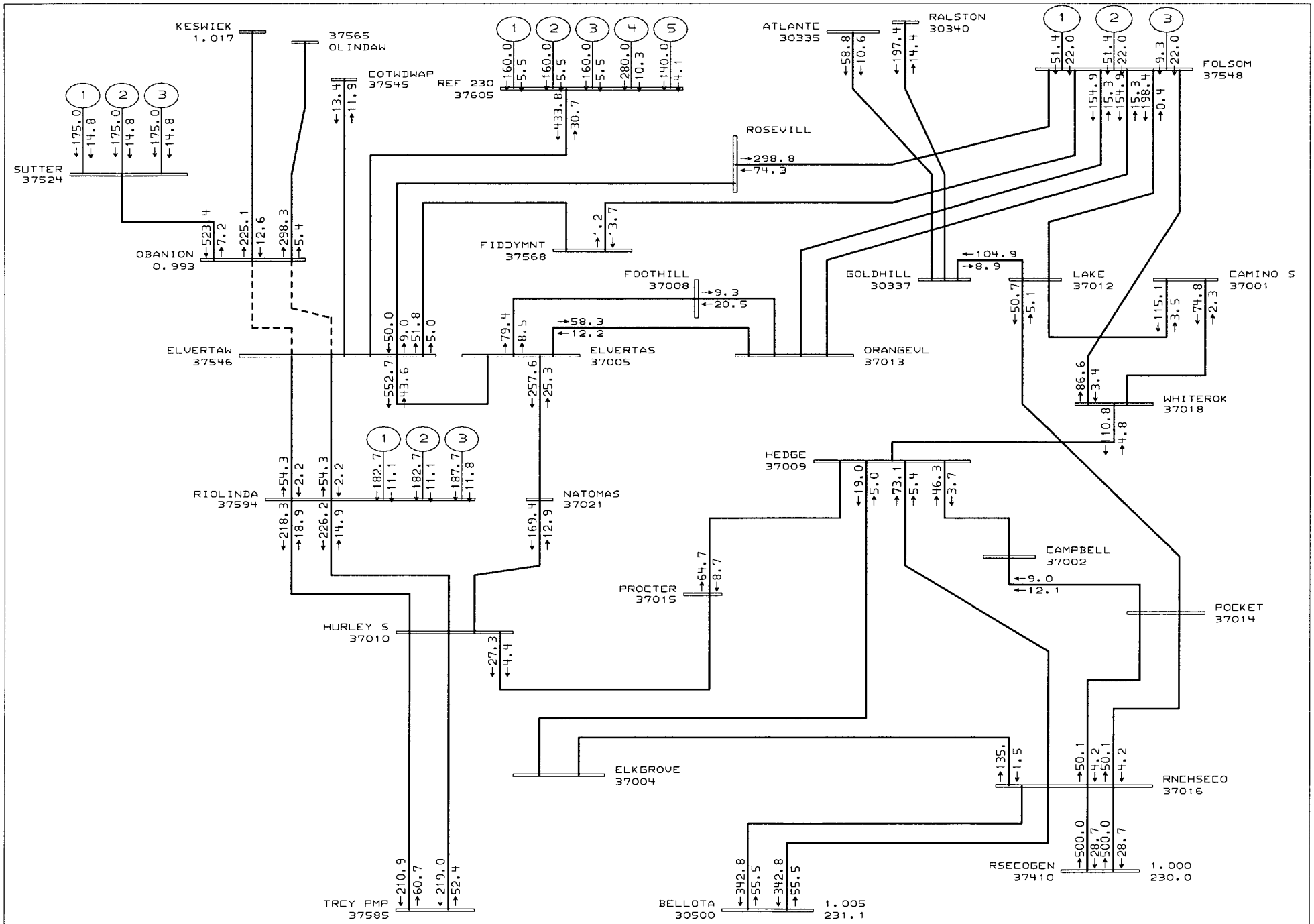

General Electric International, Inc. PSLF Program MW/MVAR Thu Jan 24 14:33:24 2002

SMUD

2005 SPRING PEAK PG&E CASE, Add 1000 Cosumnes Power Plant at Rancho Seco
PATH 15=1418MW (N-S) PATH26=2997MW (N-S) PATH65=2522MW (N-S) COI=1734MW (N-S)
Added REF @ 900MW output

d:\pslfdata\drw\refwithrs.drw
d:\pslfdata\sav\t.sav
Rating = 1

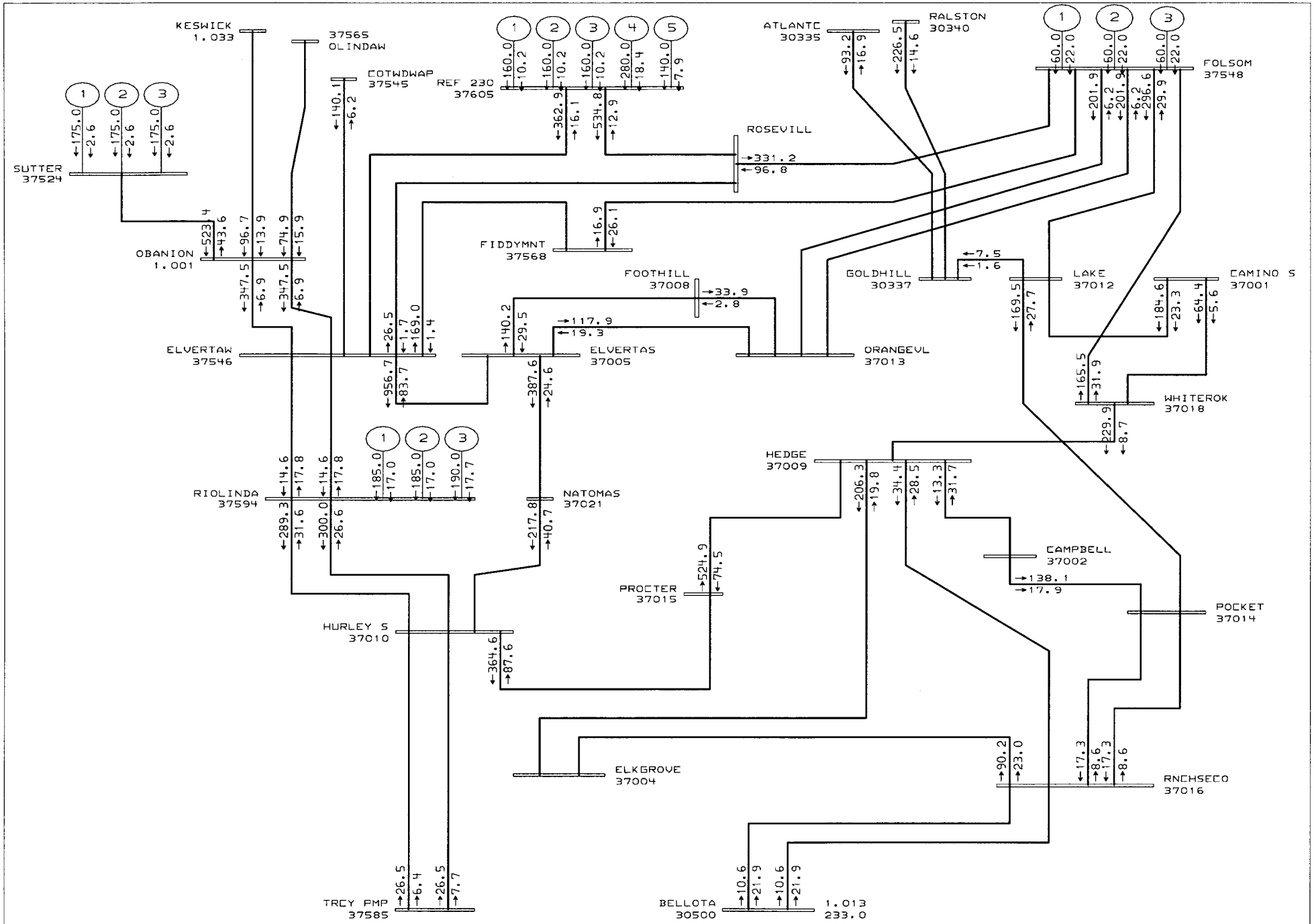

General Electric International, Inc. PSLF Program MW/MVAR Thu Jan 24 15:15:41 2002

SMUD

PG&E 2001 TRANSMISSION ASSESSMENT STUDY
2005 Area 5 Summer Peak System Case
Added Enron's REF connected to Elverta & Roseville sub.

d:\pslfdata\drw\ref.drw
d:\pslfdata\sav\roseville\05hs
Rating = 1

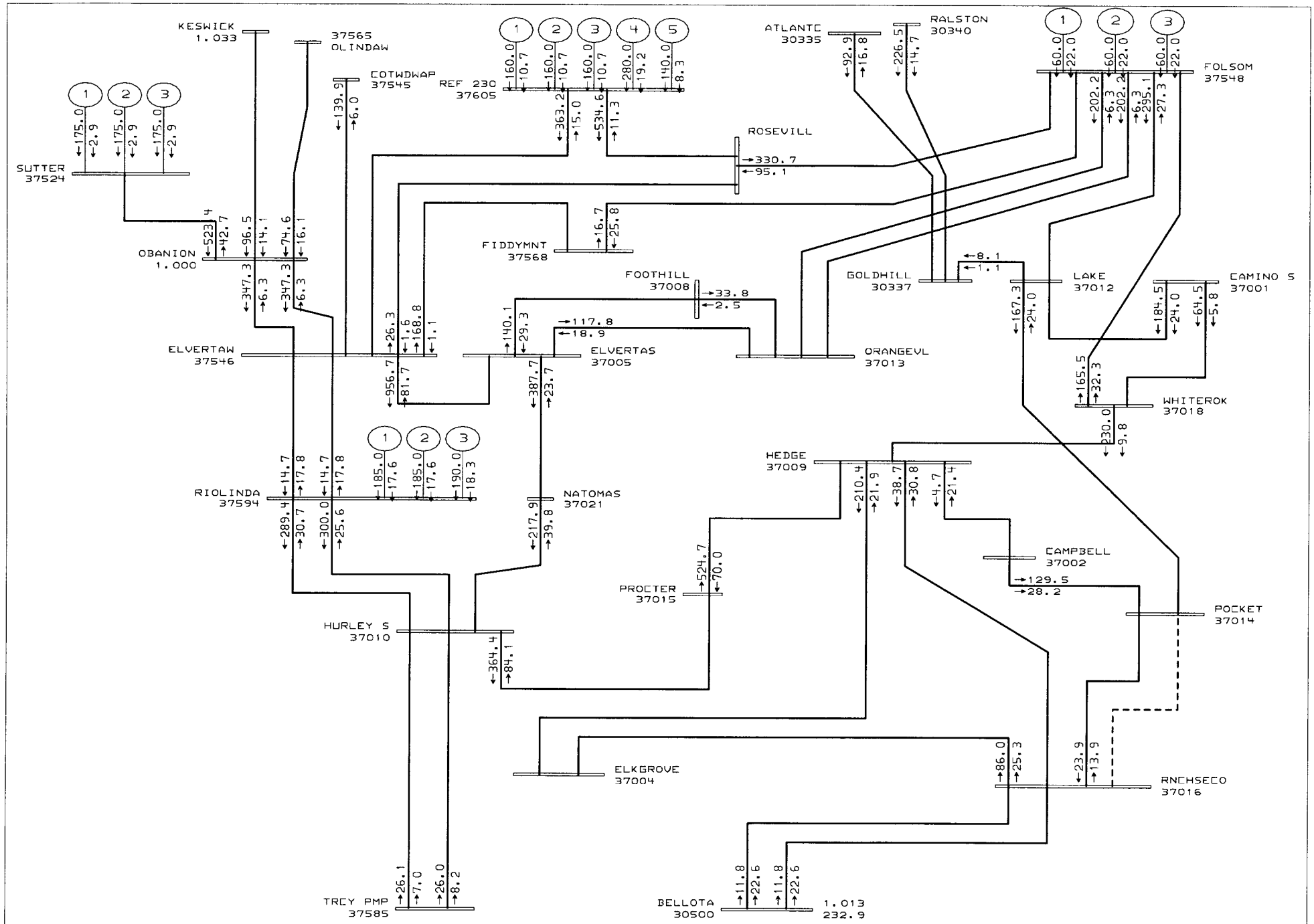

General Electric International, Inc. PSLF Program MW/MVAR Thu Jan 24 15:16:21 2002

SMUD

PG&E 2001 TRANSMISSION ASSESSMENT STUDY
2005 Area 5 Summer Peak System Case
Added Enron's REF connected to Elverta & Roseville sub.

d:\pslfdata\drw\ref.drw
d:\pslfdata\sav\roseville\05hs
Rating = 1

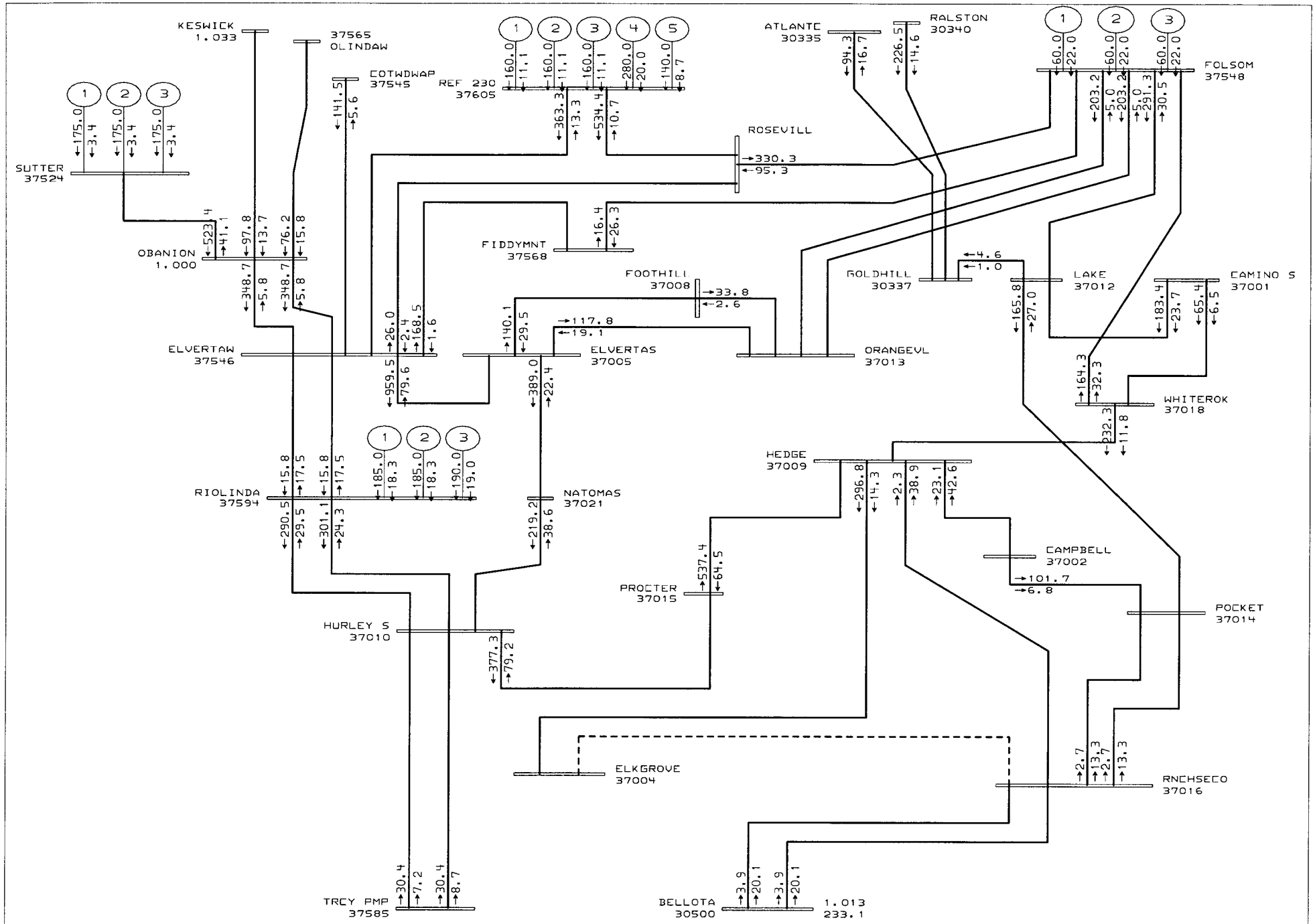

General Electric International, Inc. PSLF Program MW/MVAR Thu Jan 24 15:16:59 2002

SMUD

PG&E 2001 TRANSMISSION ASSESSMENT STUDY
2005 Area 5 Summer Peak System Case
Added Enron's REF connected to Elverta & Roseville sub.

d:\pslfdata\drw\ref.drw
d:\pslfdata\sav\roseville\05hs
Rating = 1

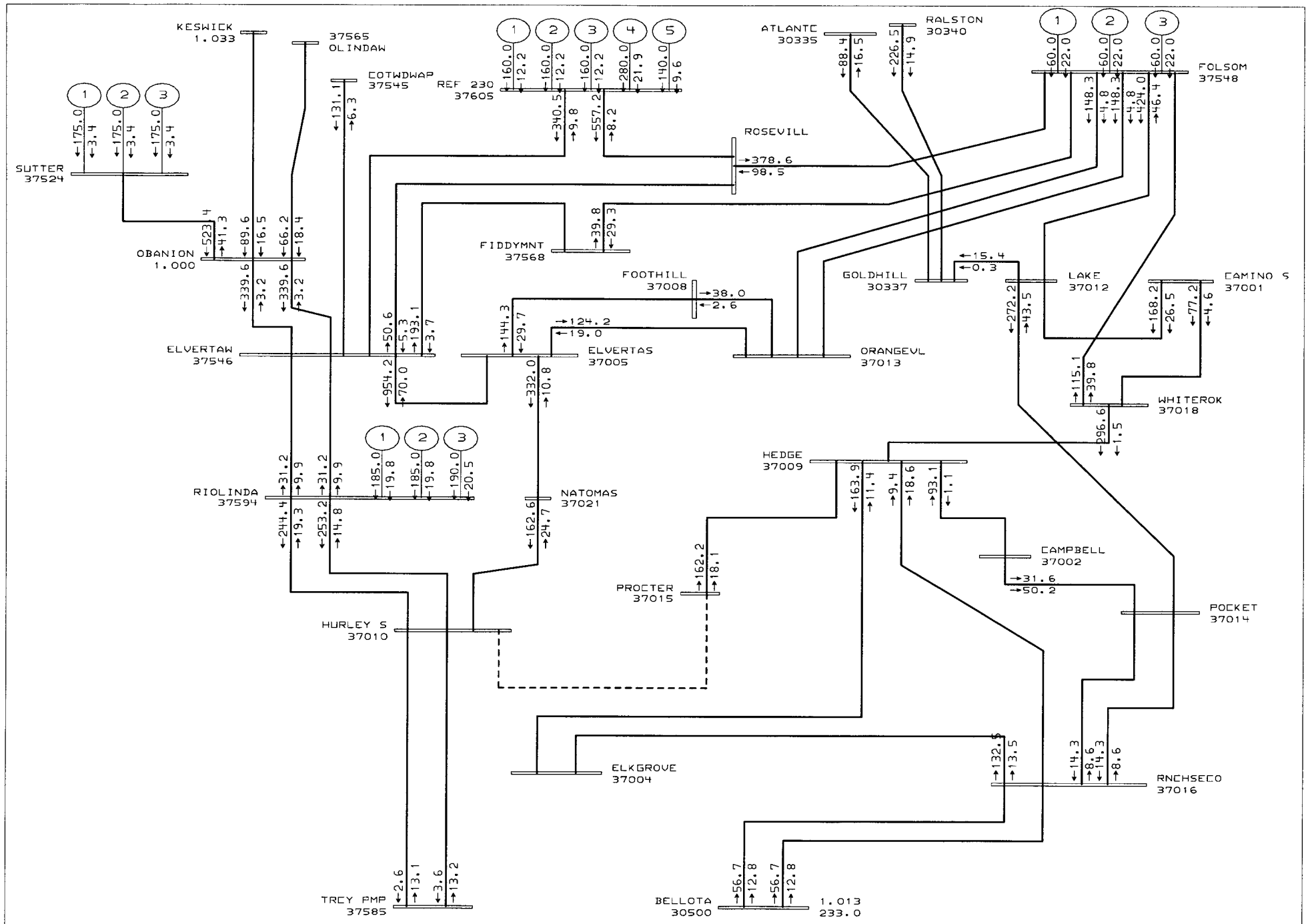

General Electric International, Inc. PSLF Program MW/MVAR Thu Jan 24 15:17:40 2002

SMUD

PG&E 2001 TRANSMISSION ASSESSMENT STUDY
2005 Area 5 Summer Peak System Case
Added Enron's REF connected to Elverta & Roseville sub.

d:\pslfdata\drw\ref.drw
d:\pslfdata\sav\roseville\05hs
Rating = 1

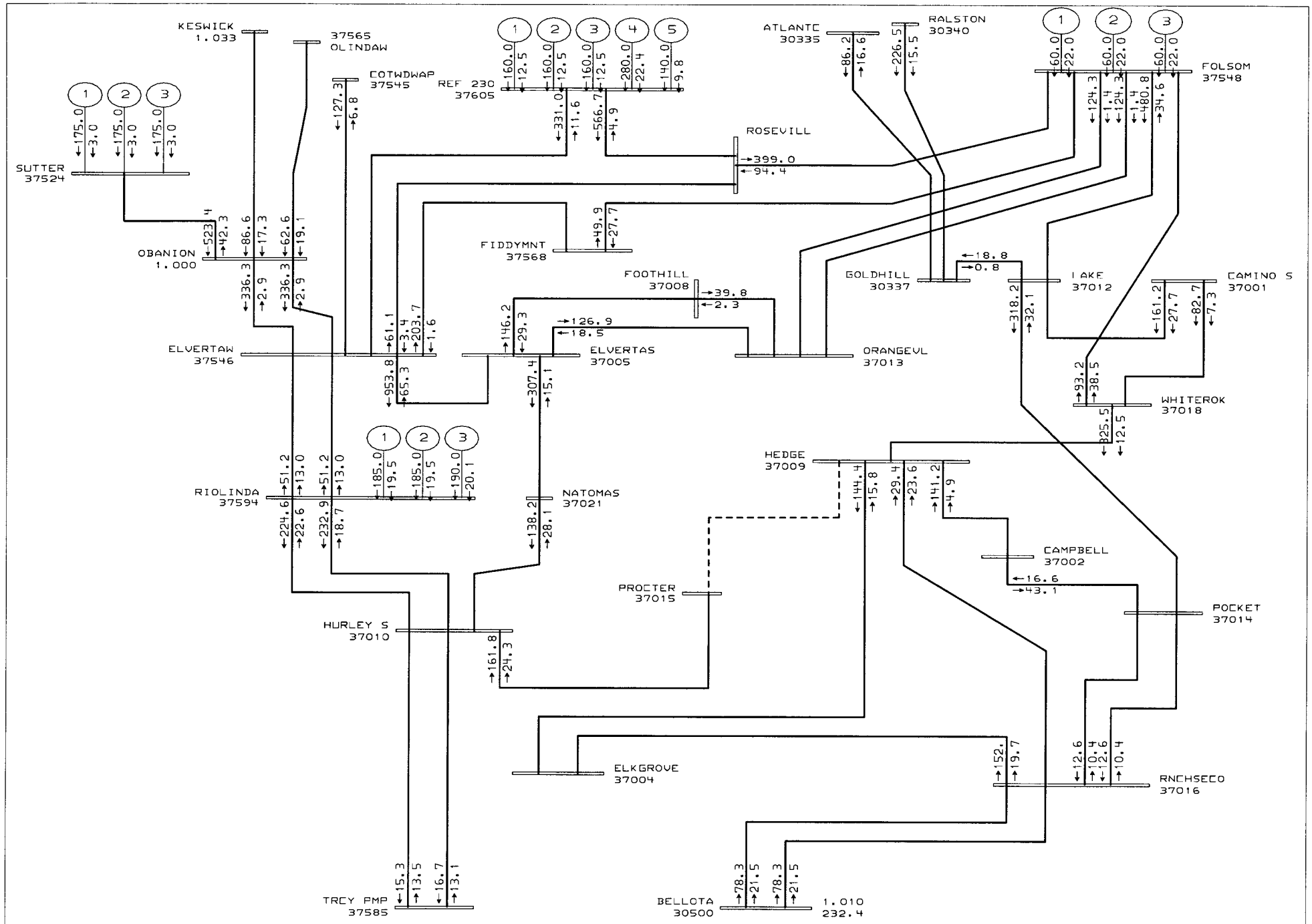

General Electric International, Inc. PSLF Program MW/MVAR Thu Jan 24 15:18:19 2002

SMUD

PG&E 2001 TRANSMISSION ASSESSMENT STUDY
2005 Area 5 Summer Peak System Case
Added Enron's REF connected to Elverta & Roseville sub.

d:\pslfdata\drw\ref.drw
d:\pslfdata\sav\roseville\05hs
Rating = 1

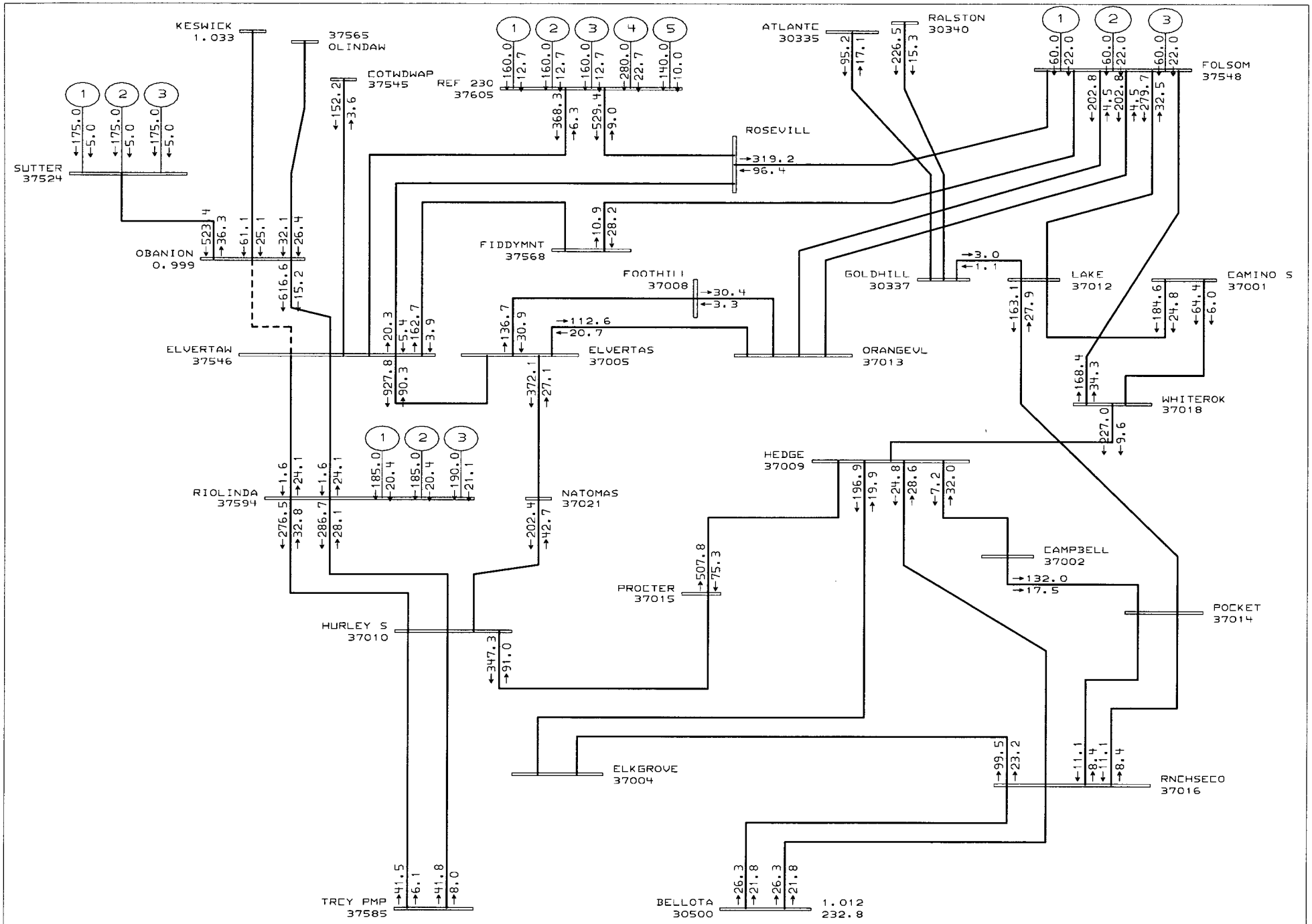

General Electric International, Inc. PSLF Program MW/MVAR Thu Jan 24 15:18:58 2002

SMUD

PG&E 2001 TRANSMISSION ASSESSMENT STUDY
2005 Area 5 Summer Peak System Case
Added Enron's REF connected to Elverta & Roseville sub.

d:\pslfdata\drw\ref.drw
d:\pslfdata\sav\roseville\05hs
Rating = 1

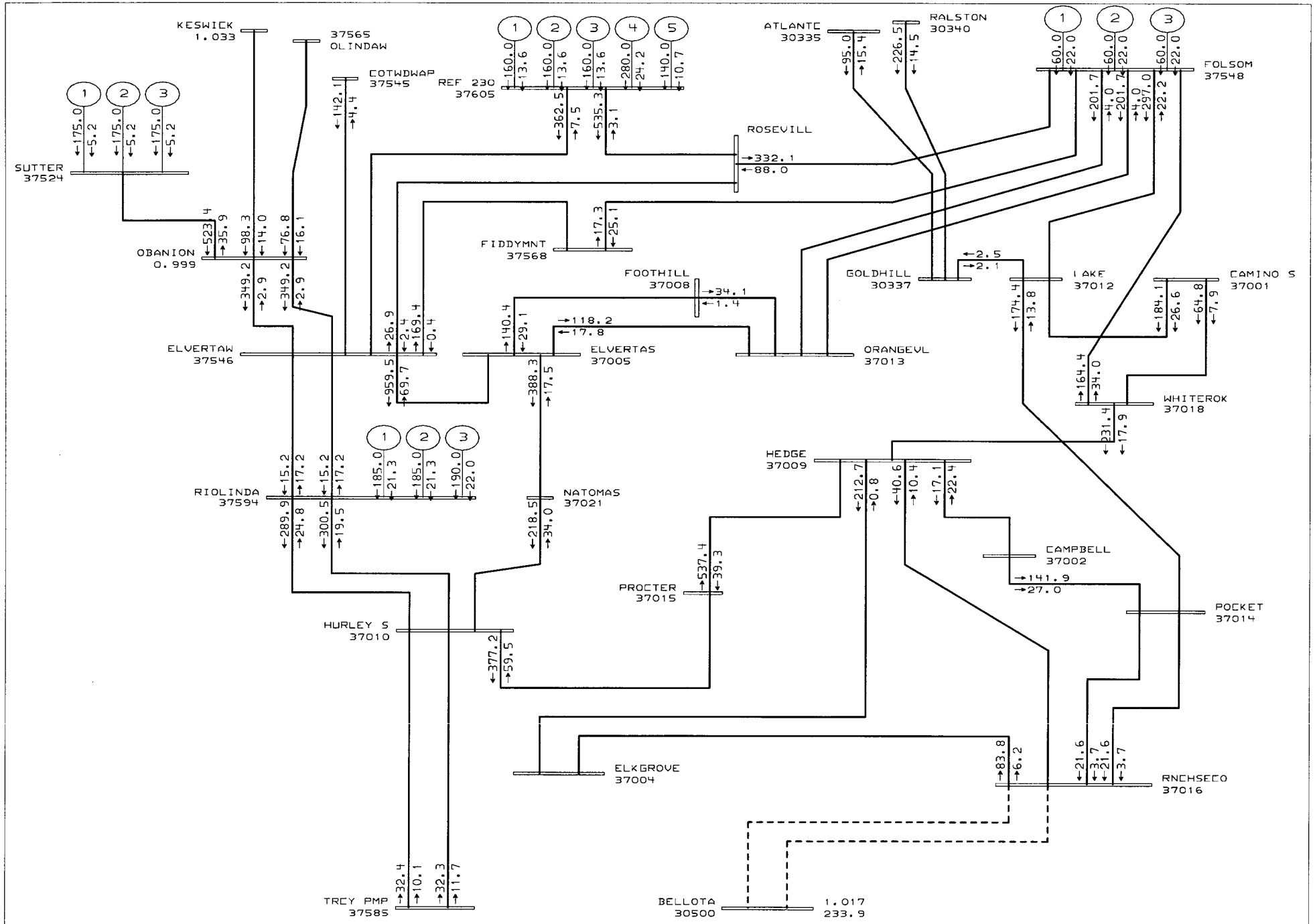

General Electric International, Inc. PSLF Program MW/MVAR Thu Jan 24 15:19:39 2002

SMUD

PG&E 2001 TRANSMISSION ASSESSMENT STUDY
2005 Area 5 Summer Peak System Case
Added Enron's REF connected to Elverta & Roseville sub.

d:\pslfdata\drw\ref.drw
d:\pslfdata\sav\roseville\05hs
Rating = 1

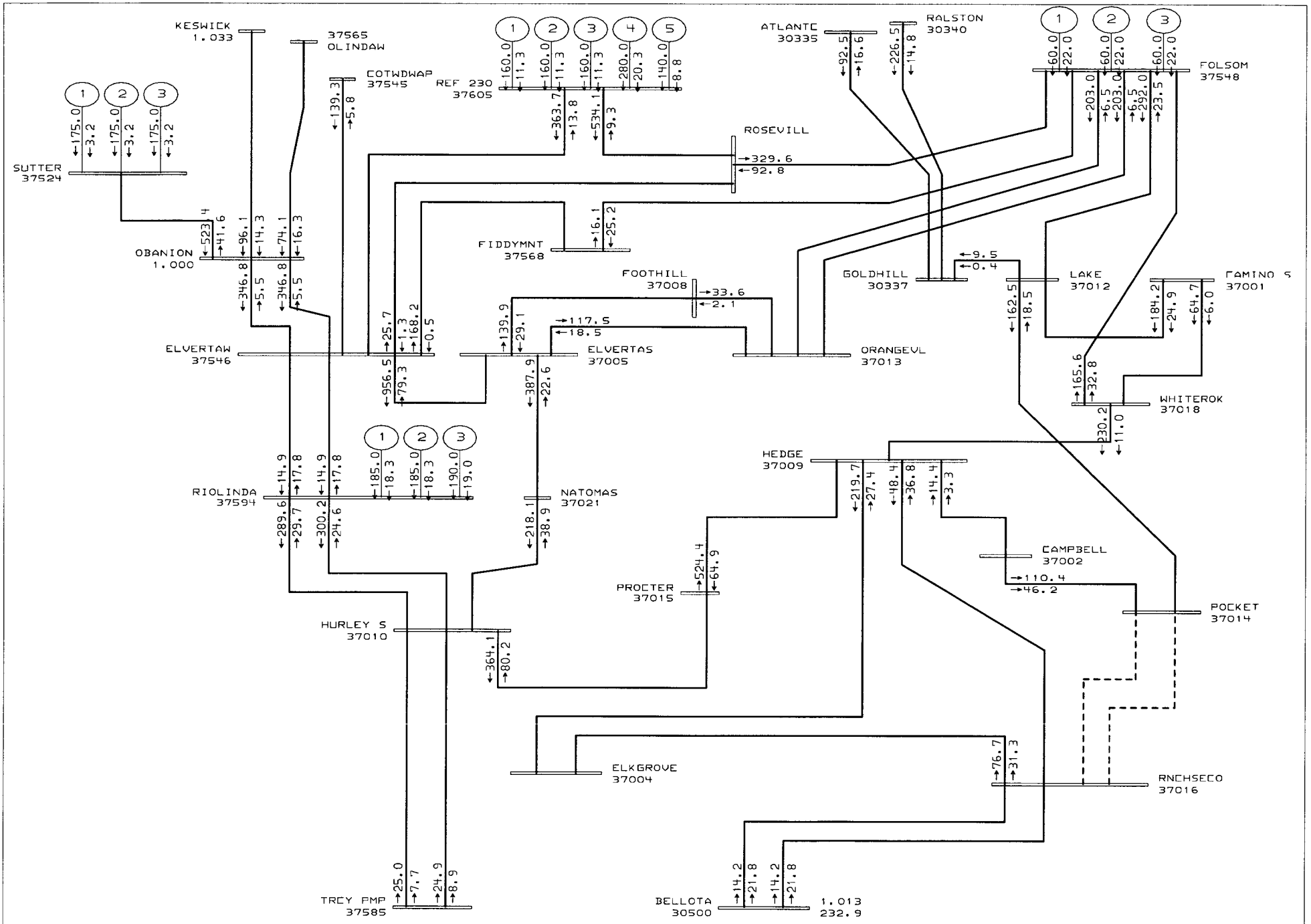

General Electric International, Inc. PSLF Program MW/MVAR Thu Jan 24 15:20:12 2002

SMUD

PG&E 2001 TRANSMISSION ASSESSMENT STUDY
2005 Area 5 Summer Peak System Case
Added Enron's REF connected to Elverta & Roseville sub.

d:\pslfdata\drw\ref.drw
d:\pslfdata\sav\roseville\05hs
Rating = 1

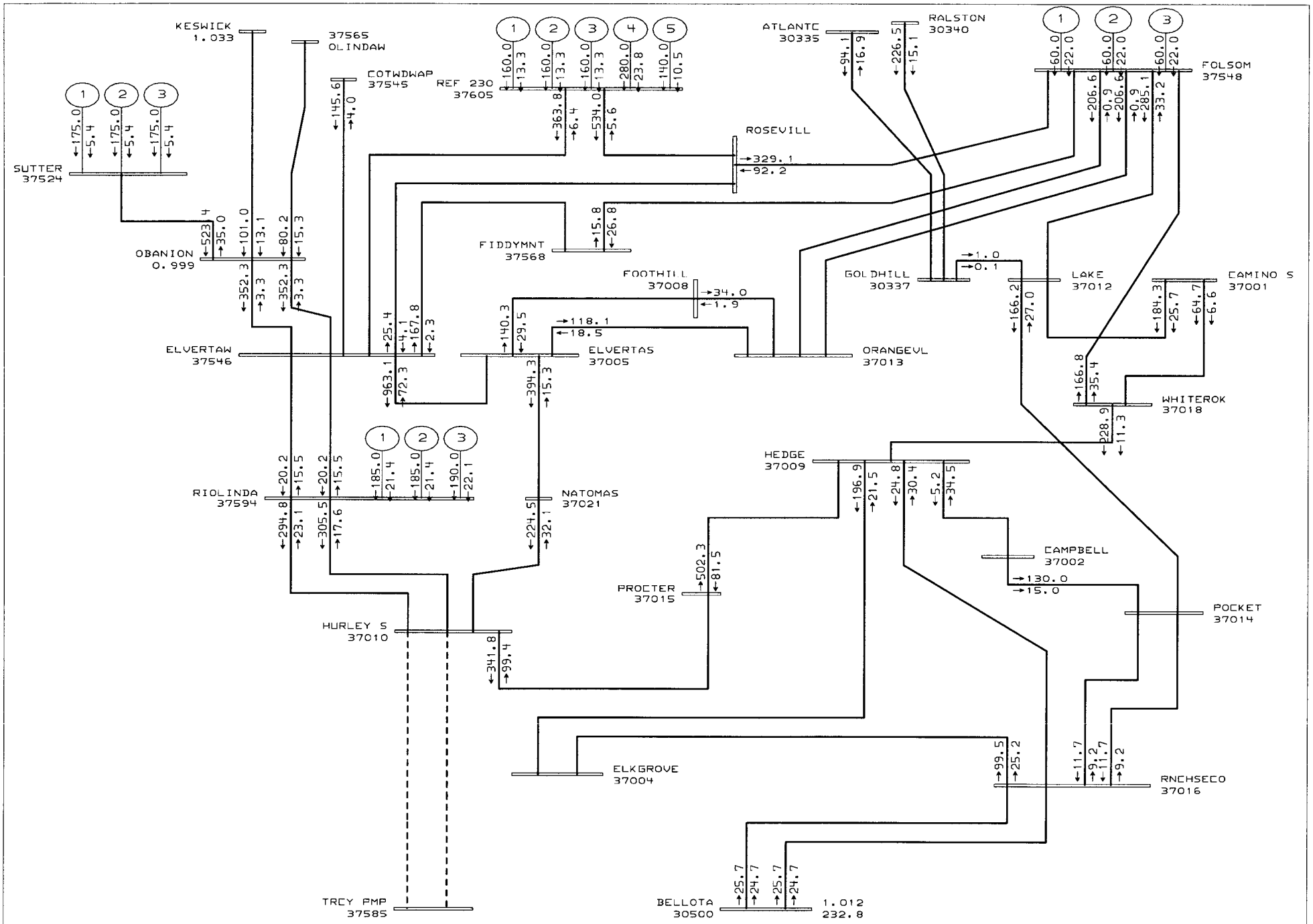

General Electric International, Inc. PSLF Program MW/MVAR Thu Jan 24 15:20:50 2002

SMUD

PG&E 2001 TRANSMISSION ASSESSMENT STUDY
2005 Area 5 Summer Peak System Case
Added Enron's REF connected to Elverta & Roseville sub.

d:\pslfdata\drw\ref.drw
d:\pslfdata\sav\roseville\05hs
Rating = 1

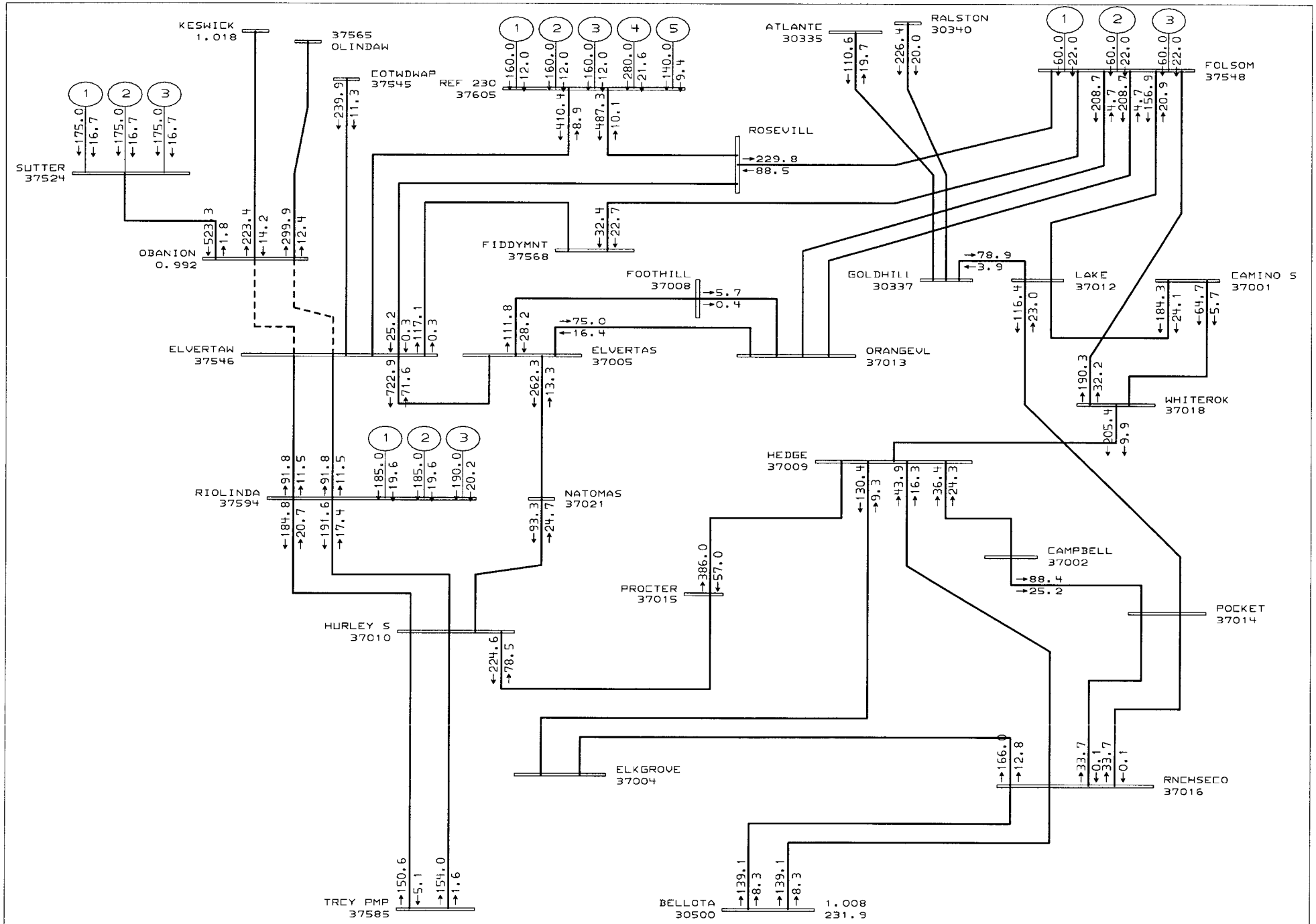

General Electric International, Inc. PSLF Program MW/MVAR Thu Jan 24 15:21:24 2002

SMUD

PG&E 2001 TRANSMISSION ASSESSMENT STUDY
2005 Area 5 Summer Peak System Case
Added Enron's REF connected to Elverta & Roseville sub.

d:\pslfdata\drw\ref.drw
d:\pslfdata\sav\roseville\05hs
Rating = 1

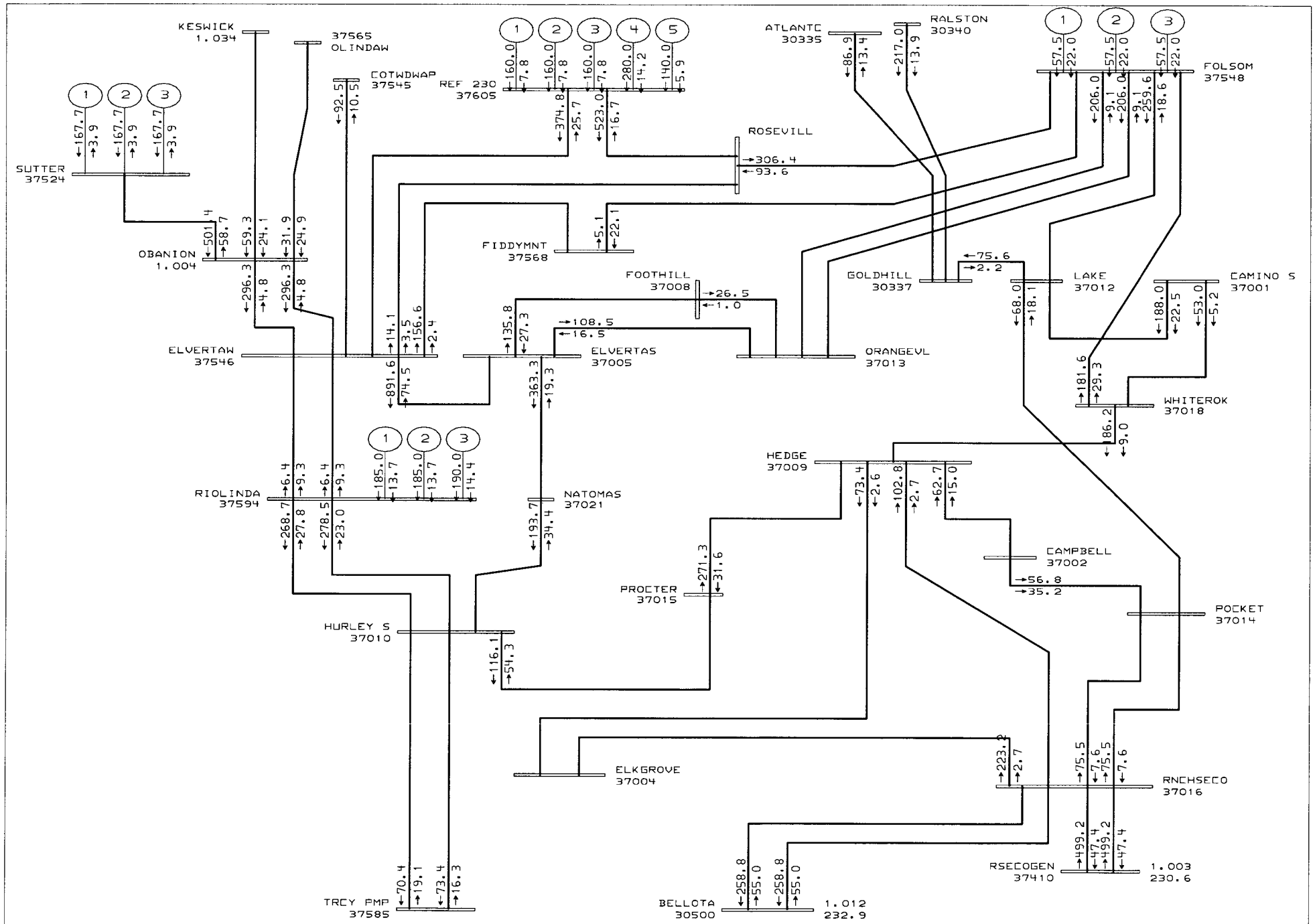

General Electric International, Inc. PSLF Program MW/MVAR Thu Jan 24 15:23:54 2002

SMUD

Sensitivity Study, Add 1000 MW Cosumnes Power Plant at Rancho Seco
2005 Area 5 Summer Peak System Case
Added Enron's REF connected to Elverta & Roseville sub.

d:\pslfdata\drw\refwithrs.drw
d:\pslfdata\sav\t.sav
Rating = 1

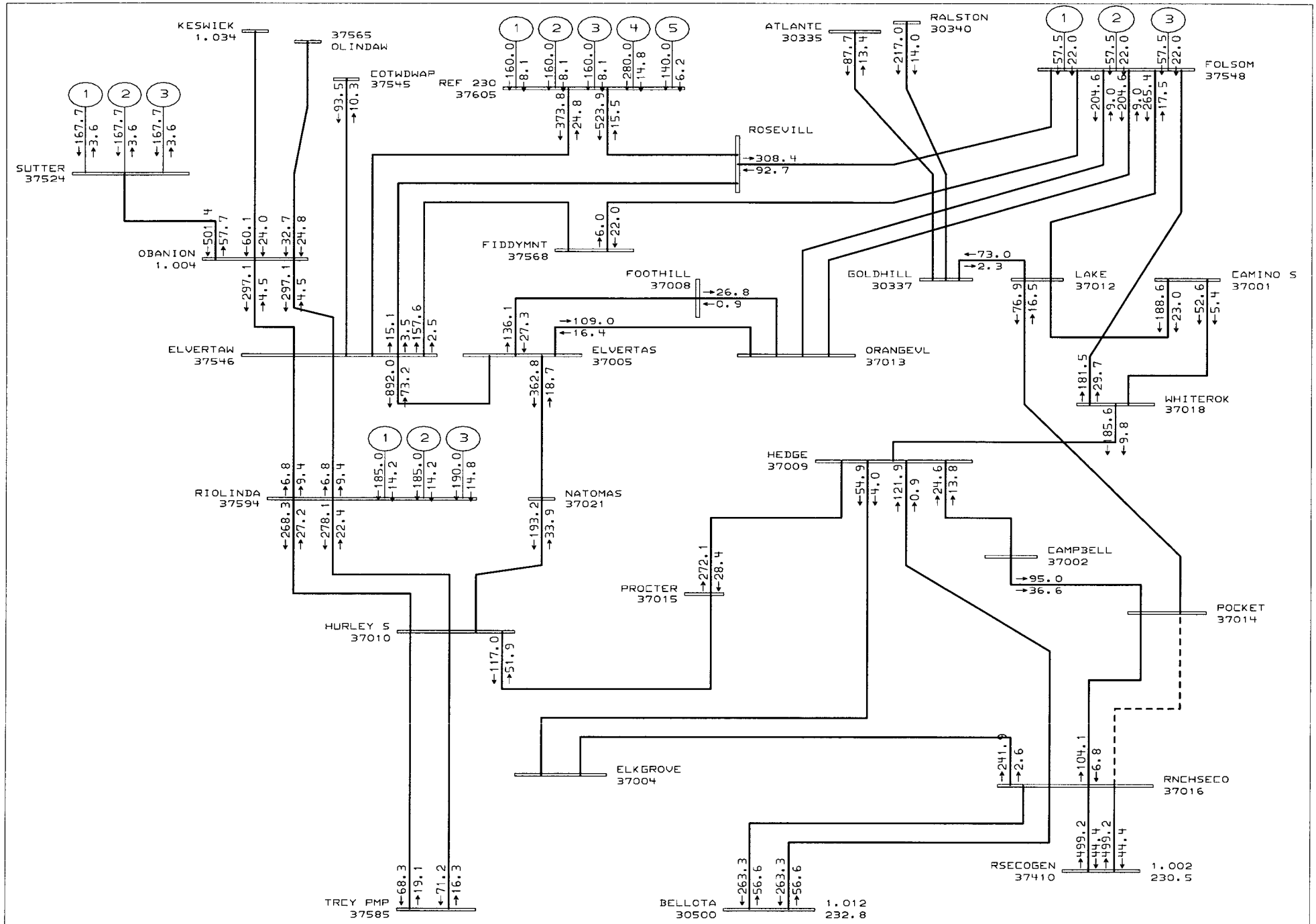

General Electric International, Inc. PSLF Program MW/MVAR Thu Jan 24 15:24:27 2002

SMUD

Sensitivity Study, Add 1000 MW Cosumnes Power Plant at Rancho Seco
2005 Area 5 Summer Peak System Case
Added Enron's REF connected to Elverta & Roseville sub.

d:\pslfdata\drw\refwithrs.drw
d:\pslfdata\sav\t.sav
Rating = 1

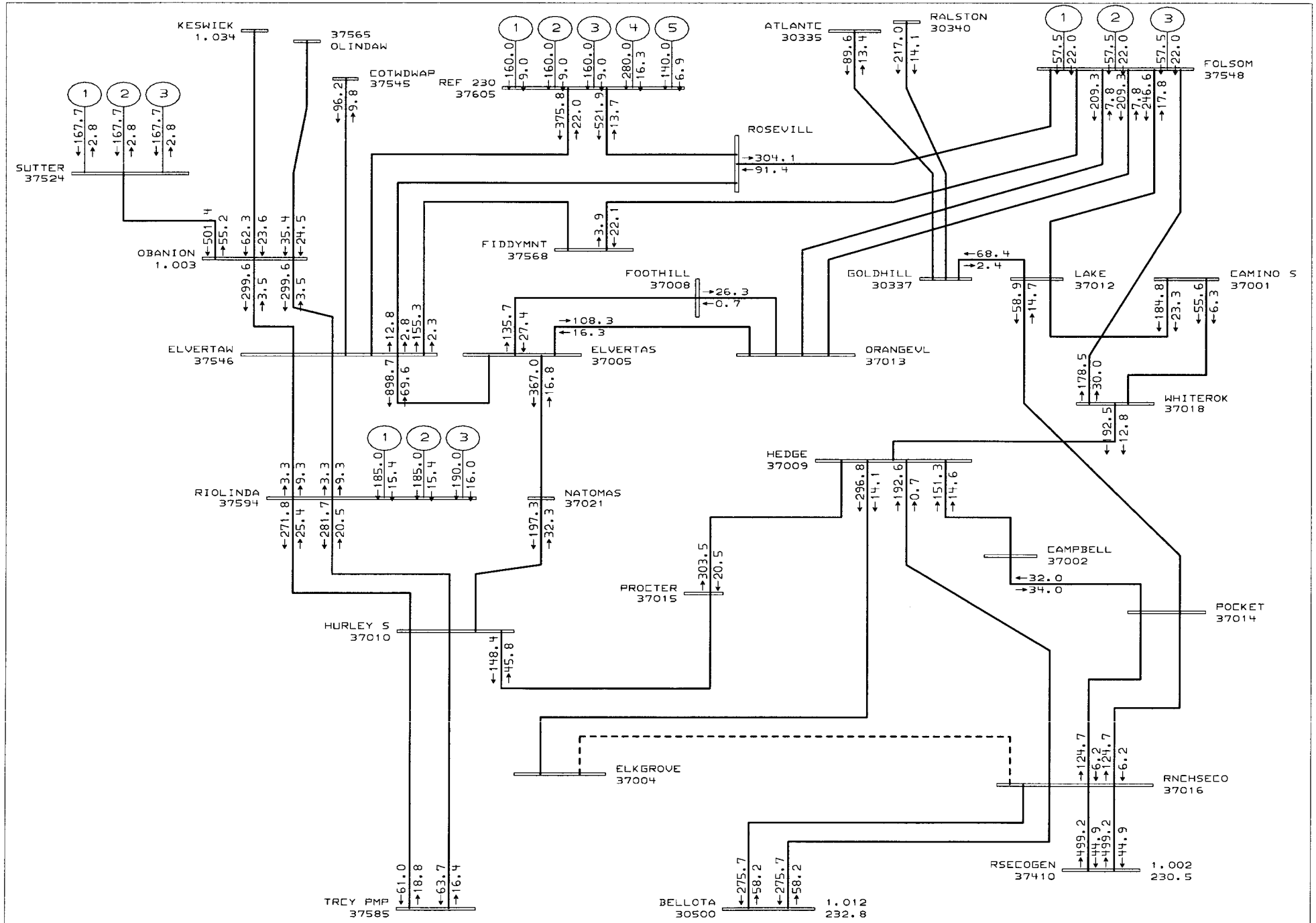

General Electric International, Inc. PSLF Program MW/MVAR Thu Jan 24 15:25:00 2002

SMUD

Sensitivity Study, Add 1000 MW Cosumnes Power Plant at Rancho Seco
2005 Area 5 Summer Peak System Case
Added Enron's REF connected to Elverta & Roseville sub.

d:\pslfdata\drw\refwithrs.drw
d:\pslfdata\sav\t.sav
Rating = 1

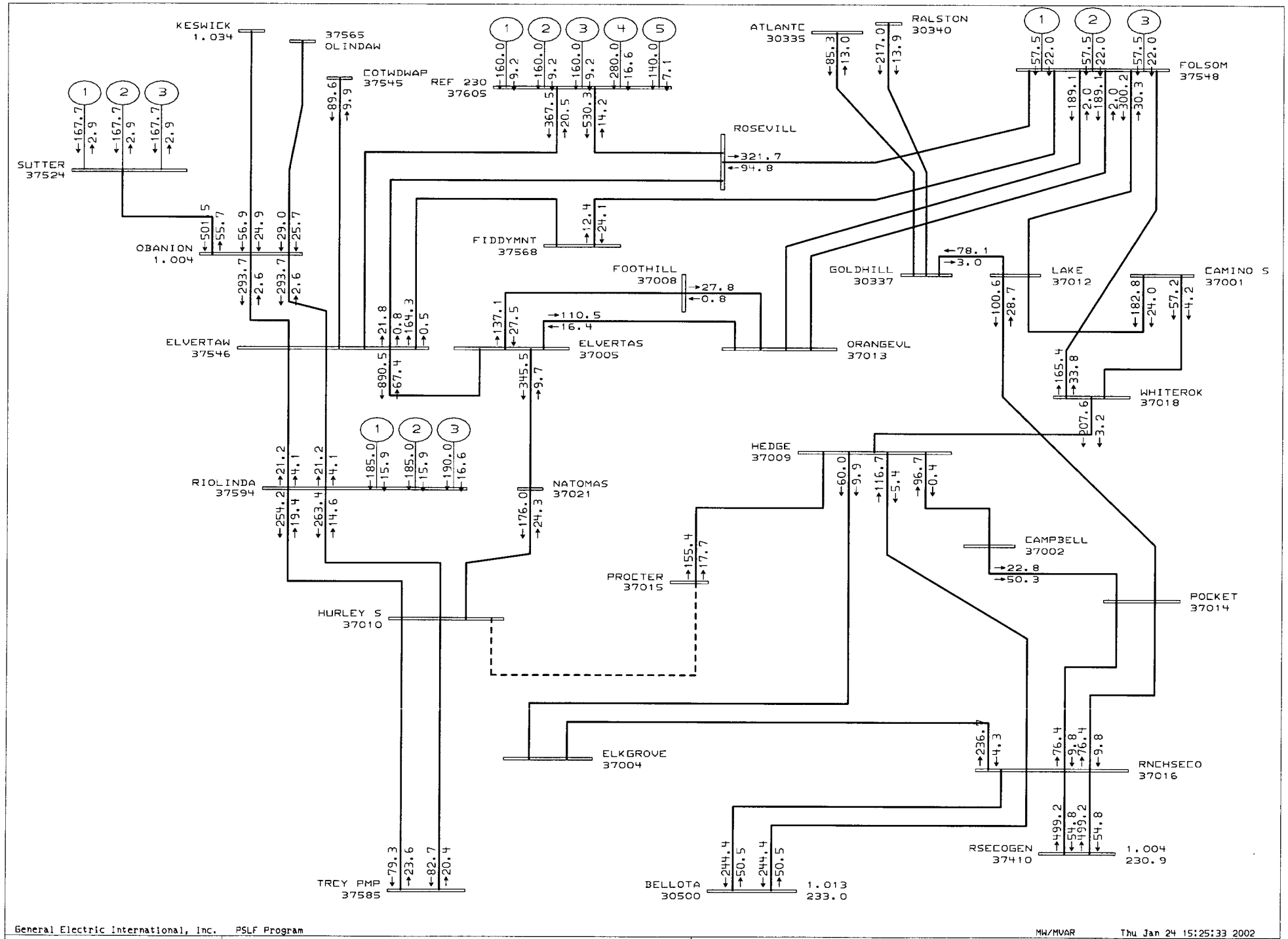

General Electric International, Inc. PSLF Program MW/MVAR Thu Jan 24 15:25:33 2002

SMUD

Sensitivity Study, Add 1000 MW Cosumnes Power Plant at Rancho Seco
2005 Area 5 Summer Peak System Case
Added Enron's REF connected to Elverta & Roseville sub.

d:\pslfdata\drw\refwithrs.drw
d:\pslfdata\sav\t.sav
Rating = 1

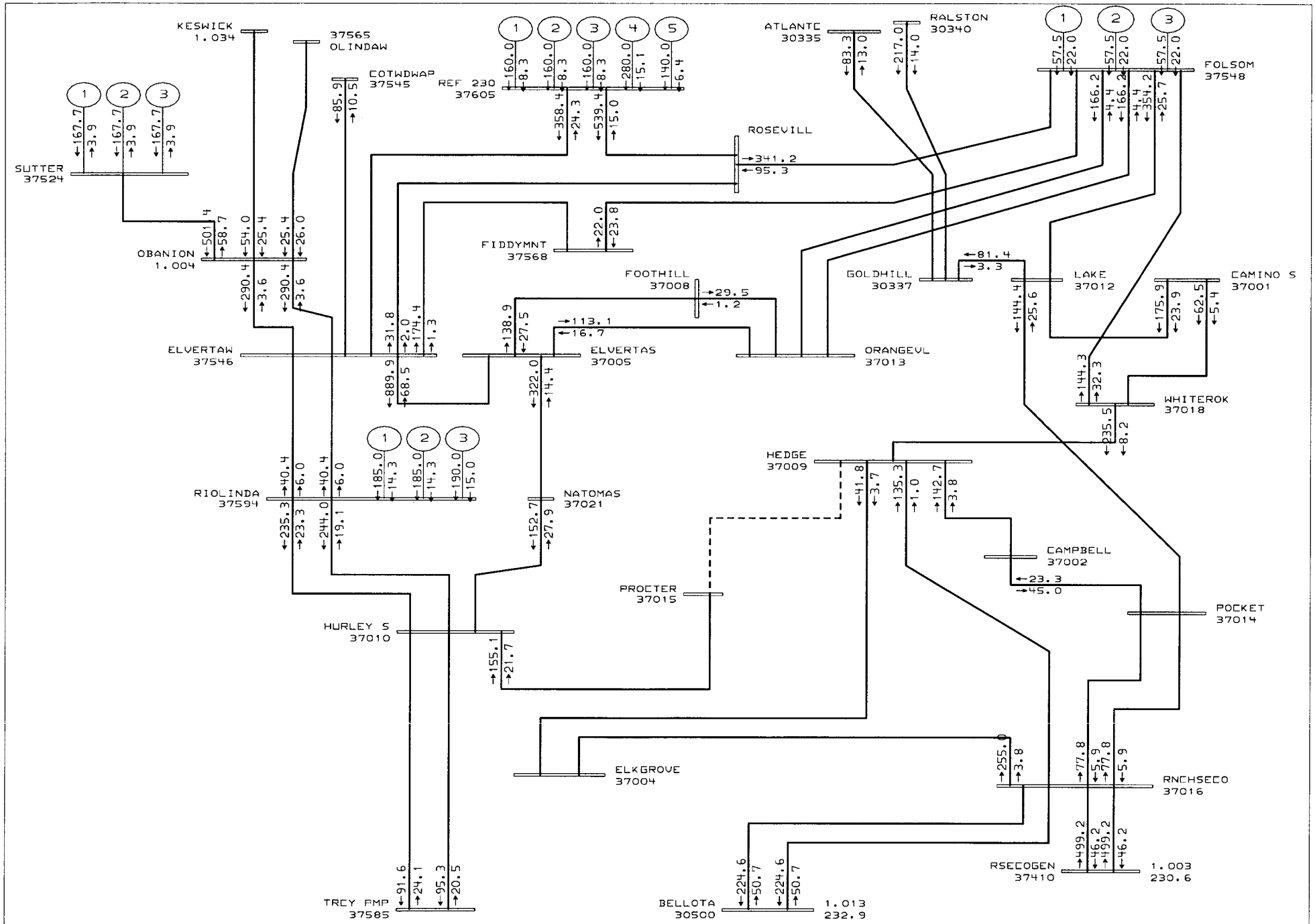

General Electric International, Inc. PSLF Program MW/MVAR Thu Jan 24 15:26:04 2002

SMUD

Sensitivity Study, Add 1000 MW Cosumnes Power Plant at Rancho Seco
2005 Area 5 Summer Peak System Case
Added Enron's REF connected to Elverta & Roseville sub.

d:\pslfdata\drw\refwithrs.drw
d:\pslfdata\sav\t.sav
Rating = 1

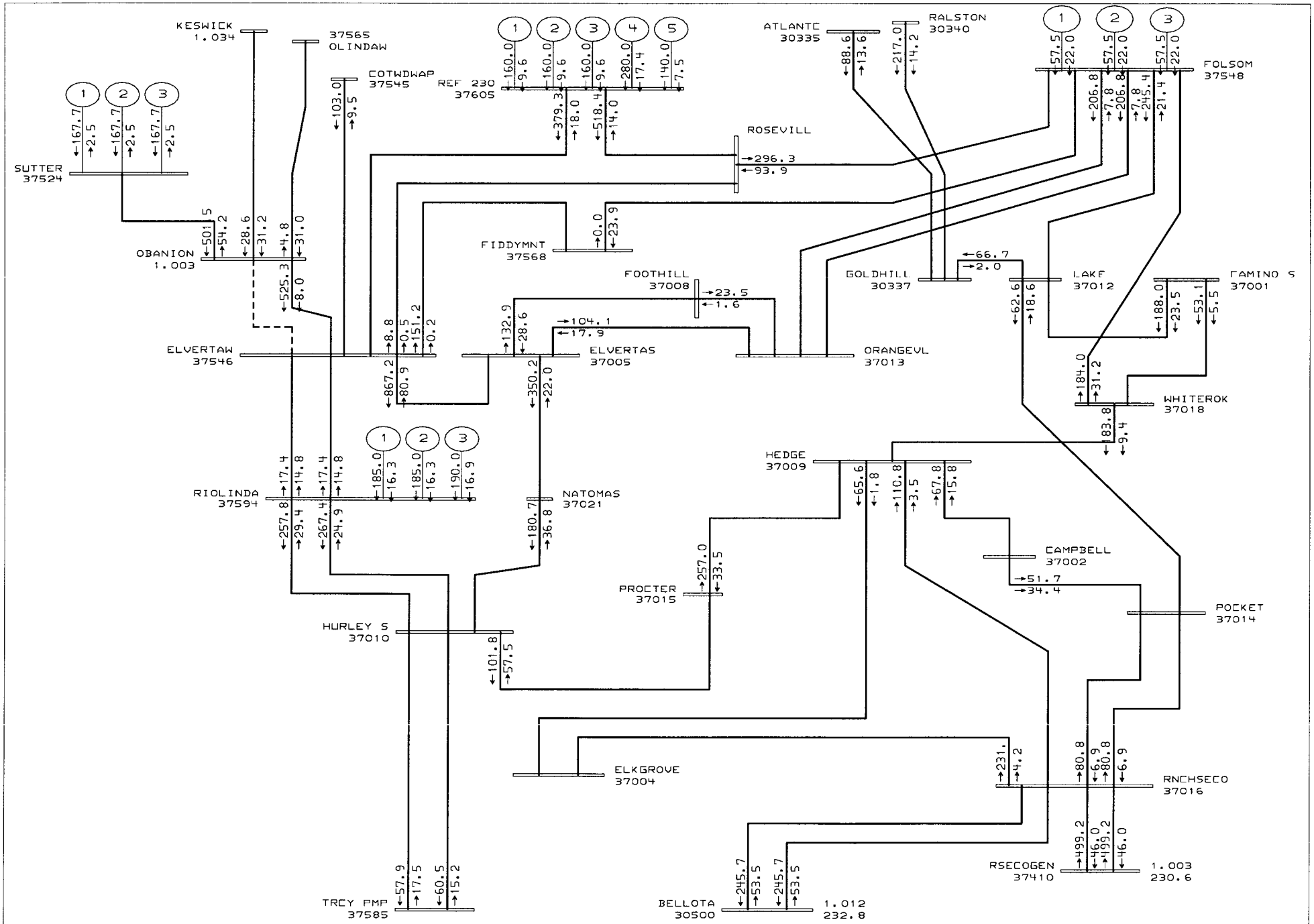

General Electric International, Inc. PSLF Program MW/MVAR Thu Jan 24 15:26:36 2002

SMUD

Sensitivity Study, Add 1000 MW Cosumnes Power Plant at Rancho Seco
2005 Area 5 Summer Peak System Case
Added Enron's REF connected to Elverta & Roseville sub.

d:\pslfdata\drw\refwithrs.drw
d:\pslfdata\sav\t.sav
Rating = 1

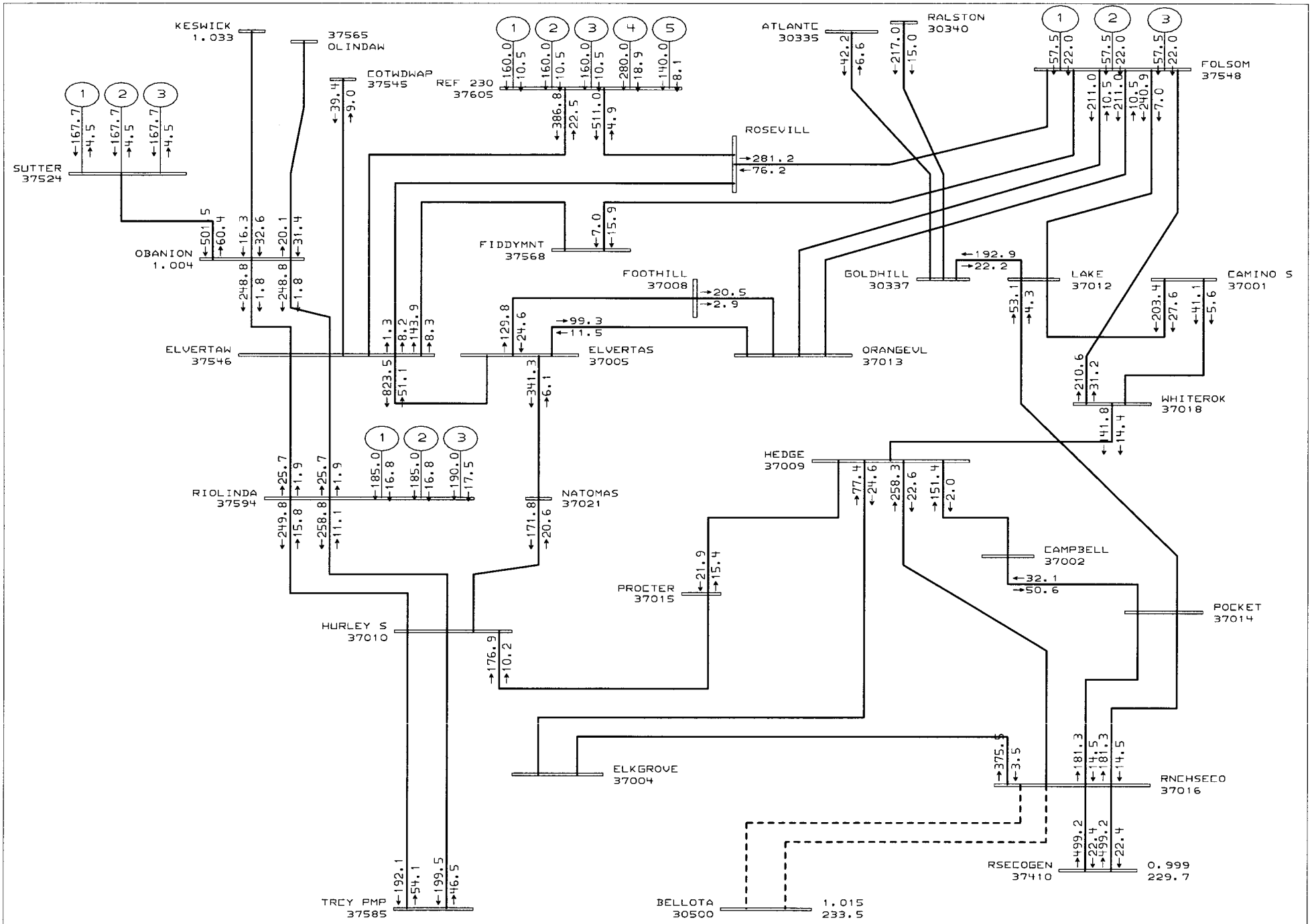

General Electric International, Inc. PSLF Program MW/MVAR Thu Jan 24 15:27:11 2002

SMUD

Sensitivity Study, Add 1000 MW Cosumnes Power Plant at Rancho Seco
2005 Area 5 Summer Peak System Case
Added Enron's REF connected to Elverta & Roseville sub.

d:\pslfdata\drw\refwithrs.drw
d:\pslfdata\sav\t.sav
Rating = 1

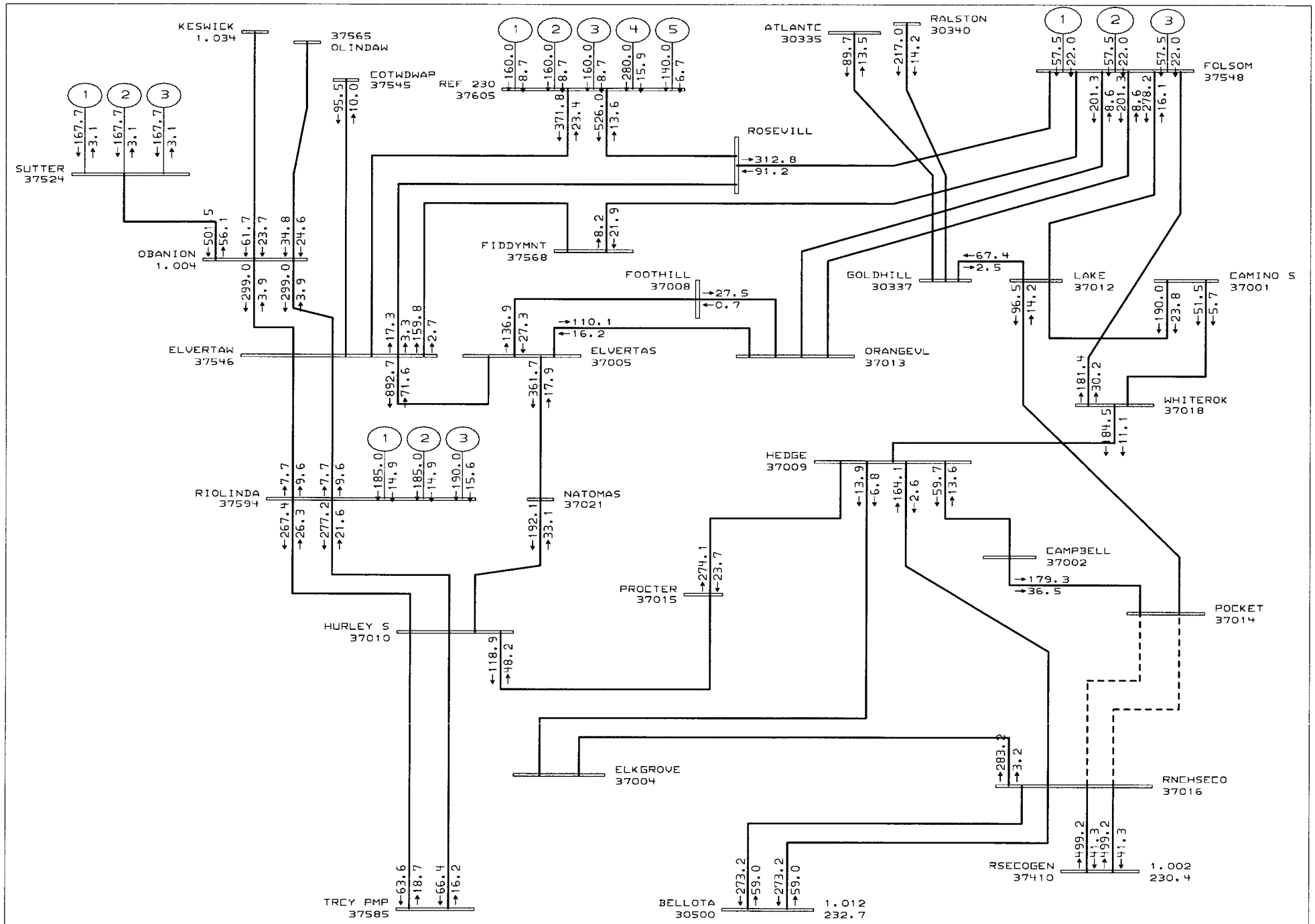

General Electric International, Inc. PSLF Program MW/MVAR Thu Jan 24 15:27:45 2002

SMUD

Sensitivity Study, Add 1000 MW Cosumnes Power Plant at Rancho Seco
2005 Area 5 Summer Peak System Case
Added Enron's REF connected to Elverta & Roseville sub.

d:\pslfdata\drw\refwithrs.drw
d:\pslfdata\sav\t.sav
Rating = 1

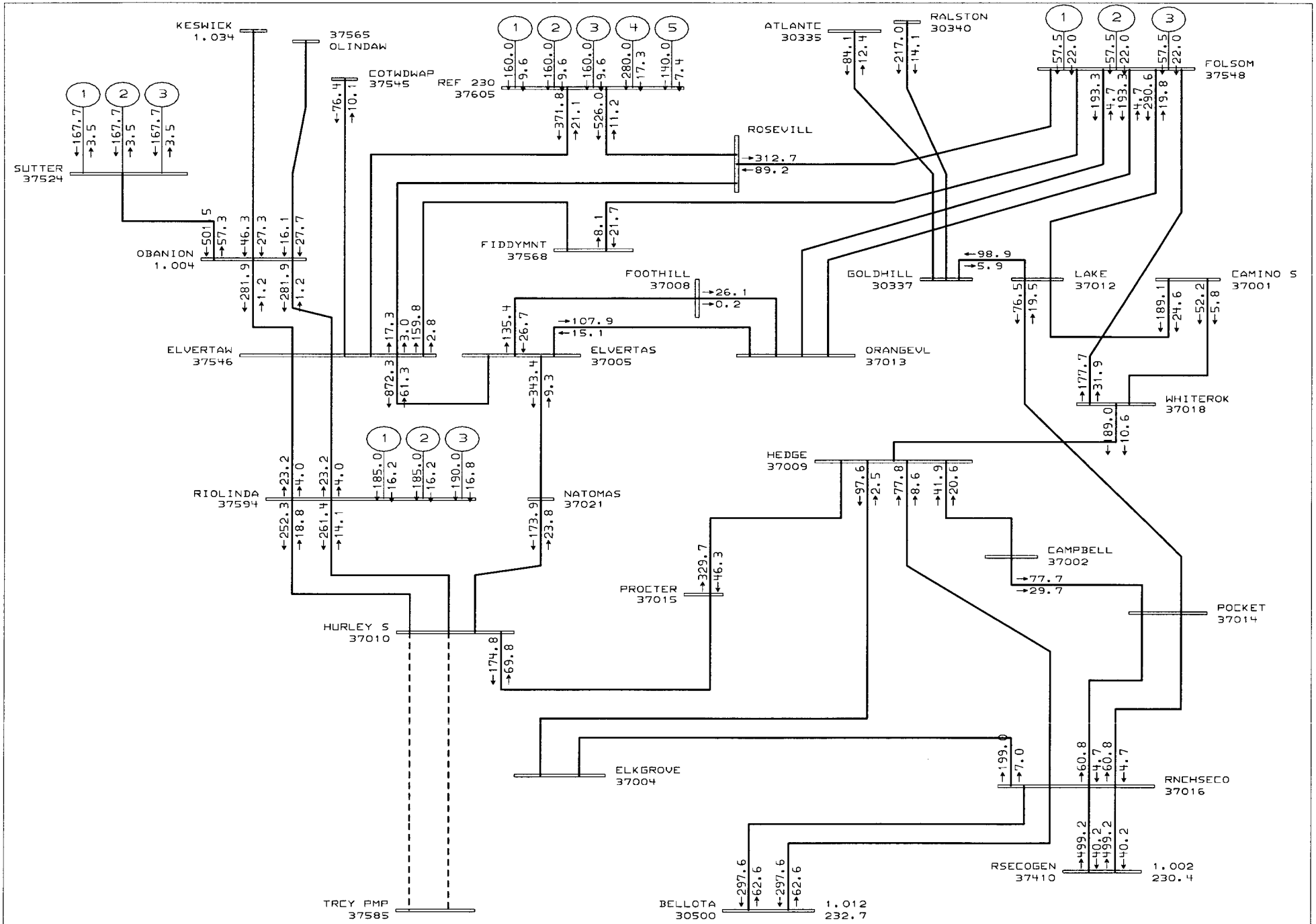

General Electric International, Inc. PSLF Program MW/MVAR Thu Jan 24 15:28:17 2002

SMUD

Sensitivity Study, Add 1000 MW Cosumnes Power Plant at Rancho Seco
2005 Area 5 Summer Peak System Case
Added Enron's REF connected to Elverta & Roseville sub.

d:\pslfdata\drw\refwithrs.drw
d:\pslfdata\sav\t.sav
Rating = 1

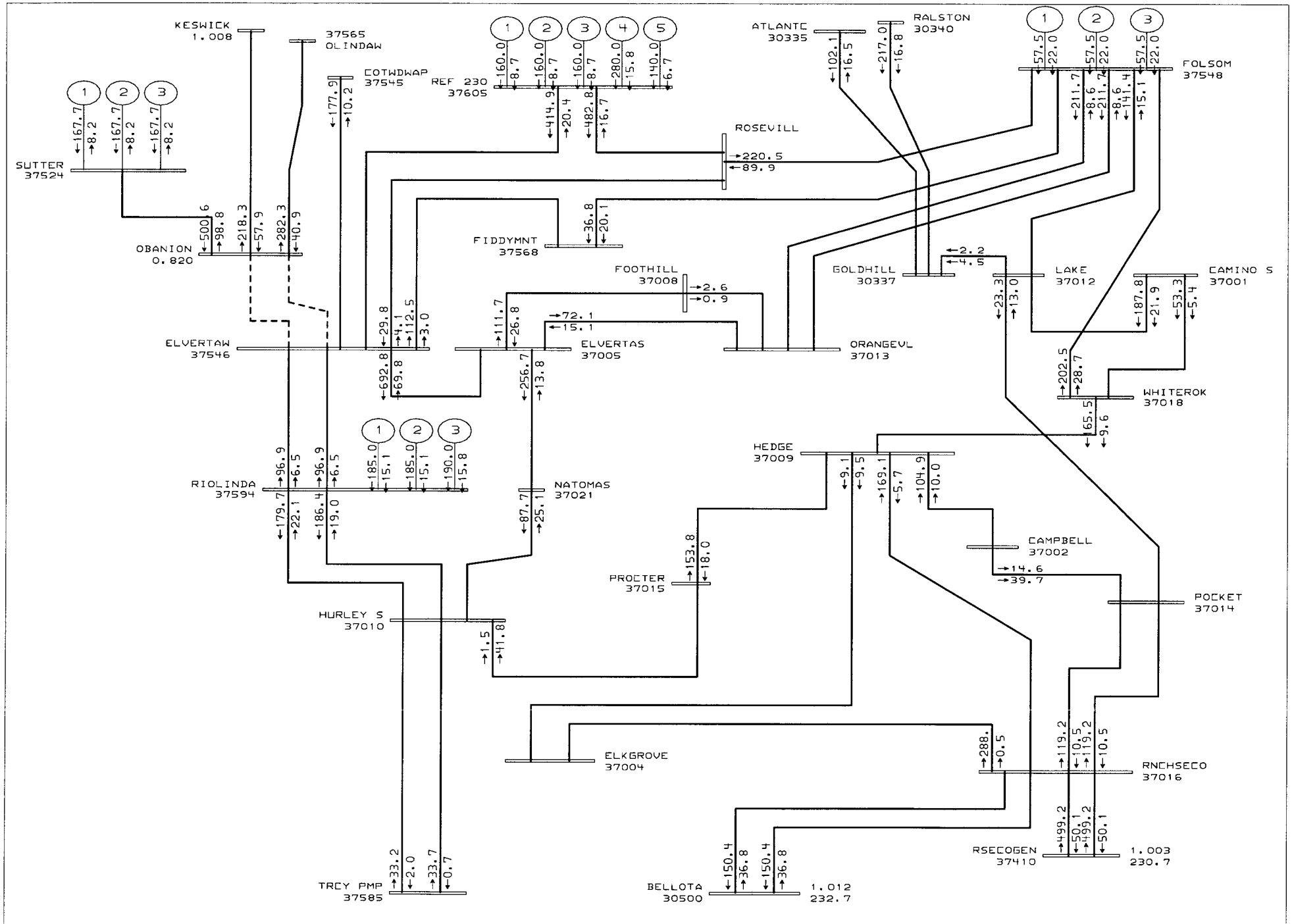

General Electric International, Inc. PSLF Program MW/MVAR Thu Jan 24 15:28:49 2002

SMUD

Sensitivity Study, Add 1000 MW Cosumnes Power Plant at Rancho Seco
2005 Area 5 Summer Peak System Case
Added Enron's REF connected to Elverta & Roseville sub.

d:\pslfdata\drw\refwithrs.drw
d:\pslfdata\sav\t.sav
Rating = 1

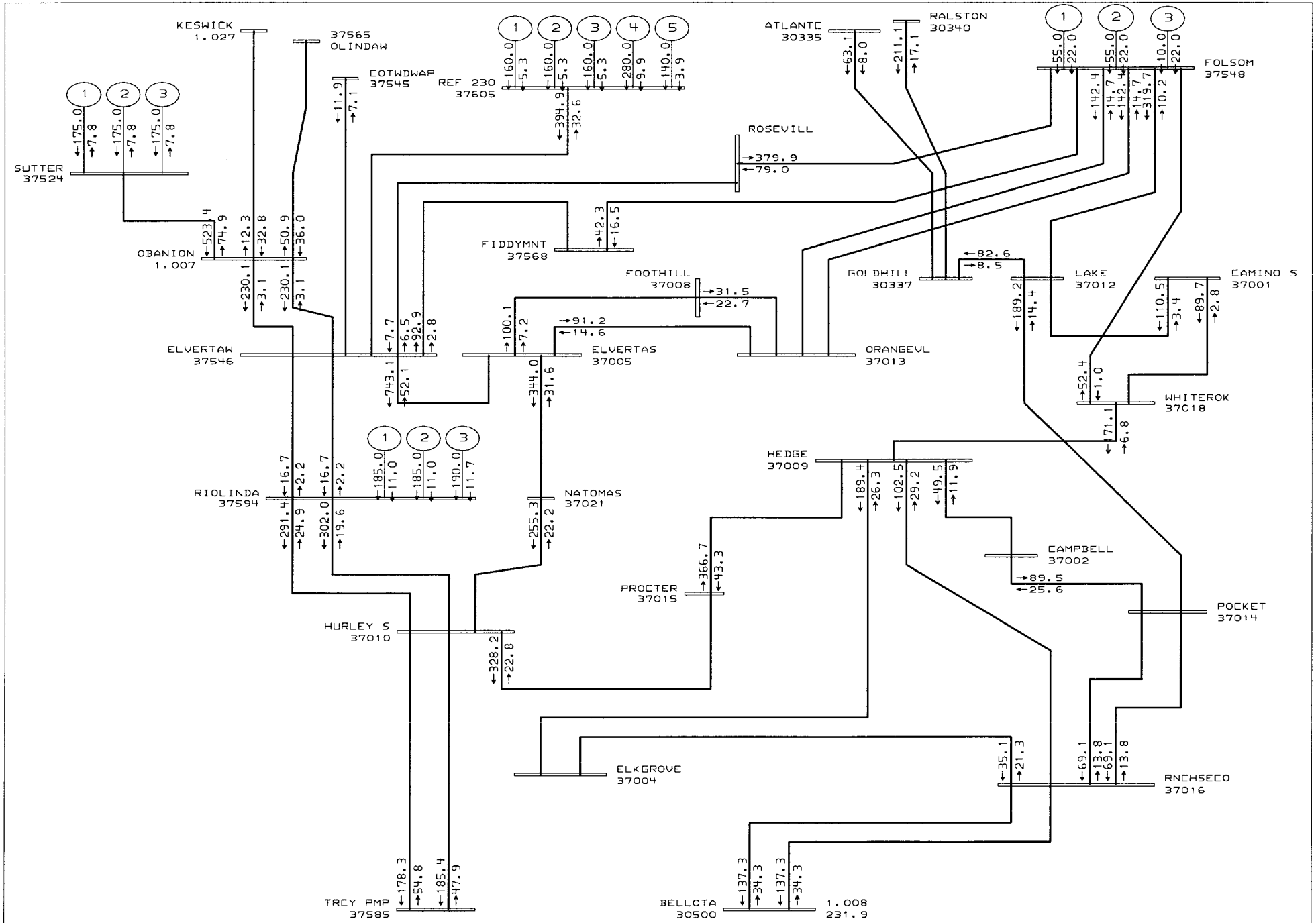

General Electric International, Inc. PSLF Program MW/MVAR Thu Jan 24 14:23:55 2002

SMUD

2005 SPRING PEAK PG&E CASE
PATH 15=1418MW (N-S) PATH26=2997MW (N-S) PATH65=2522MW (N-S) COI=1734MW (N-S)
Added REF @ 900MW output

d:\pslfdata\drw\ref.drw
d:\pslfdata\sav\05spr_wref.sav
Rating = 1

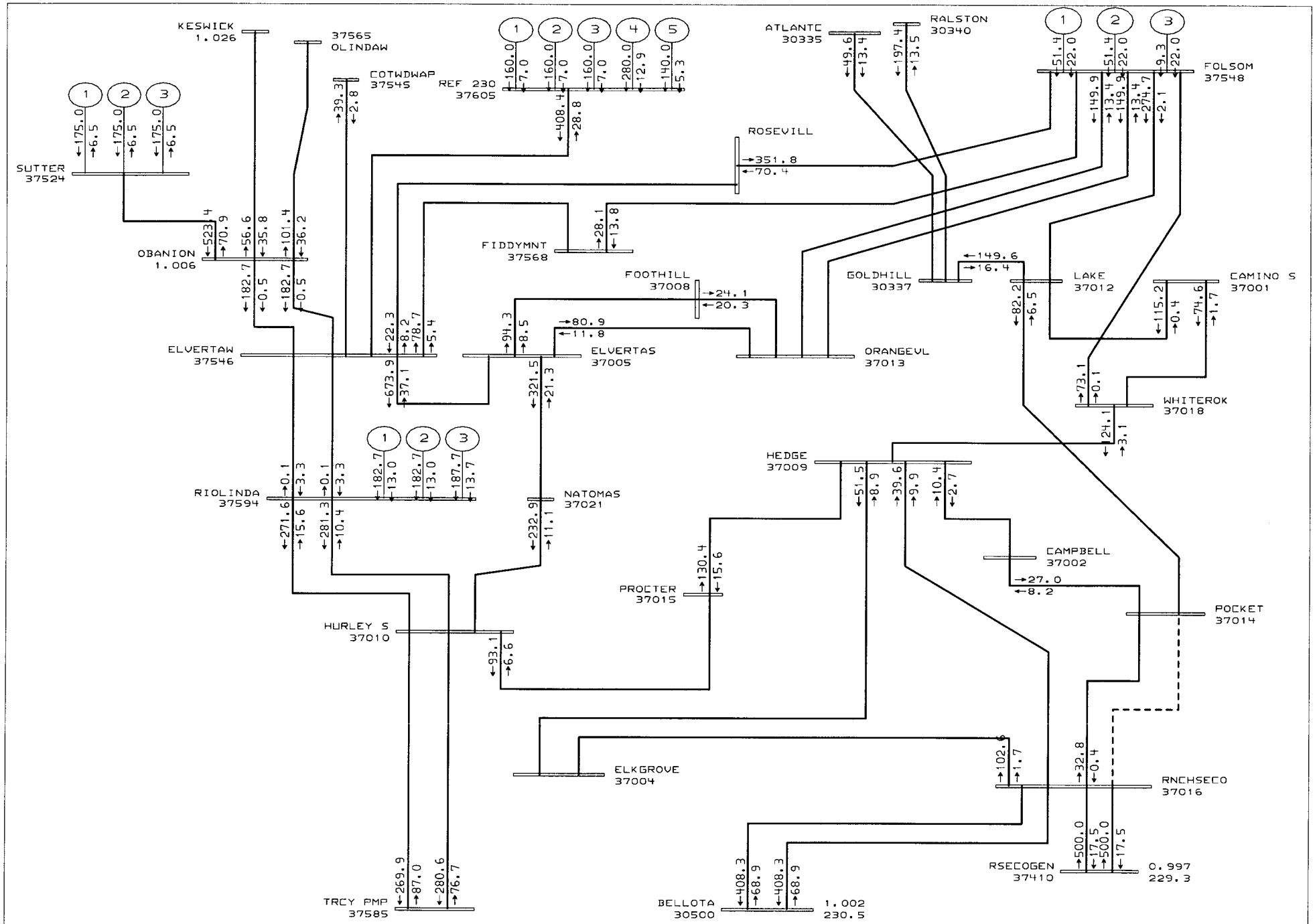

General Electric International, Inc. PSLF Program MW/MVAR Thu Jan 24 15:10:41 2002

SMUD

2005 SPRING PEAK PG&E CASE, Add 1000 Cosumnes Power Plant at Rancho Seco
PATH 15=1418MW (N-S) PATH26=2997MW (N-S) PATH65=2522MW (N-S) COI=1734MW (N-S)
Added REF @ 900MW output

d:\pslfdata\drw\refwithrs.drw
d:\pslfdata\sav\t.sav
Rating = 1

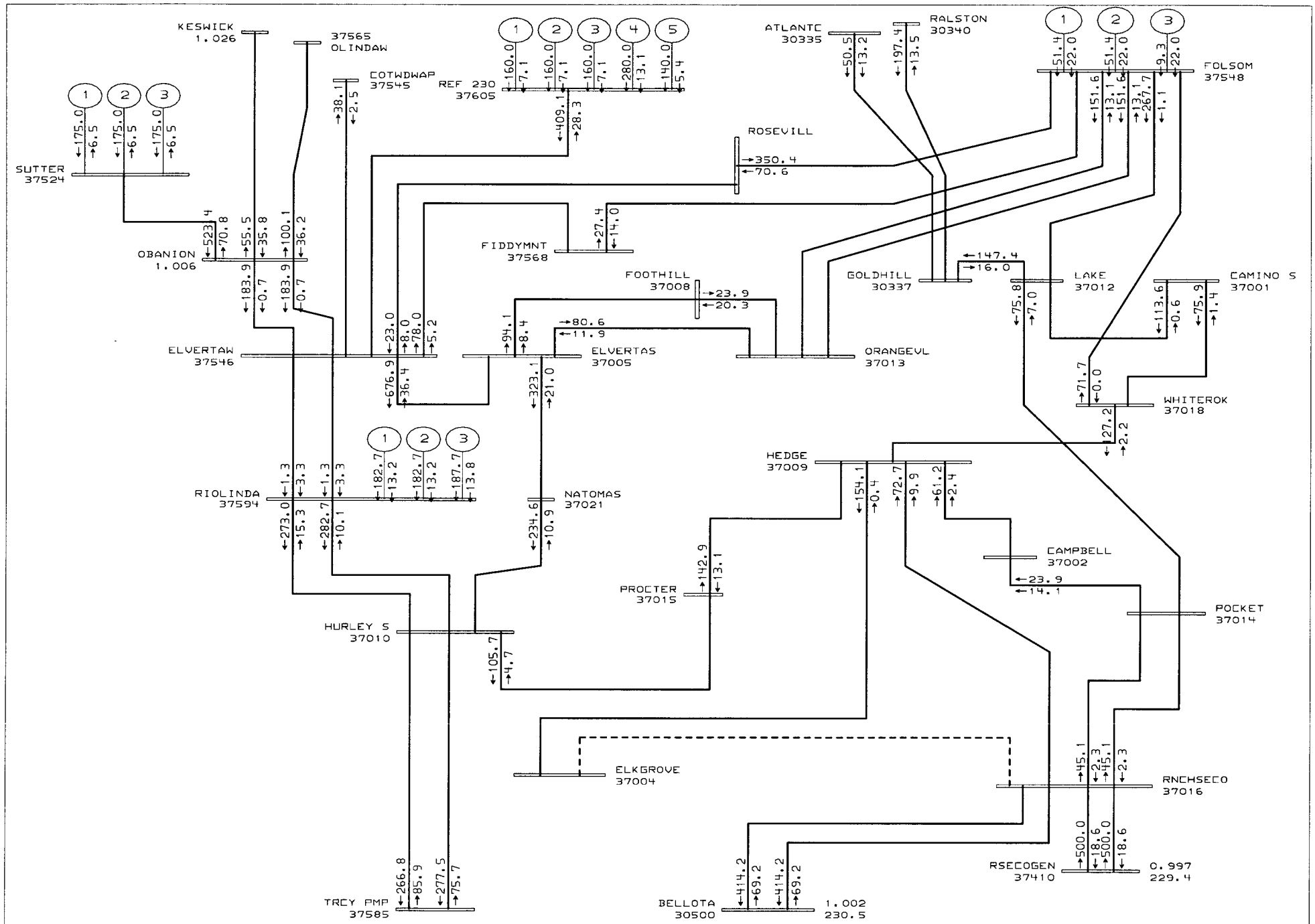

General Electric International, Inc. PSLF Program MW/MVAR Thu Jan 24 15:11:15 2002

SMUD

2005 SPRING PEAK PG&E CASE, Add 1000 Cosumnes Power Plant at Rancho Seco
PATH 15=1418MW (N-S) PATH26=2997MW (N-S) PATH65=2522MW (N-S) COI=1734MW (N-S)
Added REF @ 900MW output

d:\pslfdata\drw\refwithrs.drw
d:\pslfdata\sav\t.sav
Rating = 1