DR-PH-172

Information Required:

Please provide DPM emission factors from construction activities and a health risk assessment for diesel construction equipment emissions.

Response:

Emission factors for diesel particulate matter (DPM) were calculated on an equipment-specific basis using the OFFROAD2007 Model. Revised emission factors, based on statewide averages for engines meeting California Tier 3 emission standards, were applied to the specific equipment shown in Appendix E.2, Table E.2-1 of the AFC in accordance with the methodology described in DR-AIR-8. The tab-delimited output file from the OFFROAD2007 Model and revised construction emission calculation spreadsheets, including tabs with the emission factor calculations, can be found in the supporting data provided with the response to DR-AIR-8.

Total on-site particulate matter emissions from diesel construction equipment exhaust over the course of the construction project was estimated to be 33,058 pounds. These emissions will be limited to the relatively short-term period of construction, which is estimated to be less than 6 years, when compared to the long-term exposure required for evaluating health risk impacts associated with DPM emissions. Therefore, annual DPM emissions from construction activities used in the health risk assessment (HRA) were calculated by dividing the total emissions from diesel construction equipment exhaust during the construction period by the exposure period of concern (70-year resident, 40-year worker) so that the total mass emissions would not exceed that estimated for construction of the entire project. An annual average DPM emission rate of 472 pounds per year (lb/yr) was used for the 70-year residential exposure scenario, and an annual average DPM emission rate of 826 lb/yr was used for the 40-year worker exposure scenario.

A HRA for diesel construction equipment was conducted. The HRA of the construction equipment DPM emissions included the same source release configuration used for modeling ambient air quality impacts in the AFC, including adjustments as discussed in the AIR data requests. The meteorological data used were also the same as that used for the AFC. Off-site receptor locations of actual exposure were evaluated for health risk impacts from construction activities, as well identification of the point-of-maximum impact (PMI) in accordance with DR-PH-179. The PMI was identified by modeling a 100-meter spacing receptor grid starting at the fence line and extending outward 500 meters from the fence line. Emissions of DPM from construction equipment were apportioned to air emission sources as described above in the breakdown of hourly emissions by construction activity.

The estimated incremental cancer risk as a result of DPM emissions from construction activities was estimated to be 3.3 in one million at the PMI, and 0.93 in one million at the receptor location of highest actual exposure. These impacts are below the SCAQMD significance threshold of 10 per million. Chronic non-cancer hazard index (HI) at the PMI was 0.0021, and 0.00058 at the receptor location of highest actual exposure. These impacts are also well below the significance threshold of 1.0. The PMI is located along the northern fence line in a remote area within the project right-of-way (ROW). In addition, while the PMI is offsite it is certainly not accessed frequently if at all by the public. These are no short-term (acute non-cancer) impacts associated with exposure from DPM emissions.

DR-PH-173

Information Required:

Please provide DPM emission factors for on-site solar field and equipment maintenance activities in pounds per day and tons per year. This value can be submitted as a single number estimate of total emissions from all vehicular sources used on-site.

Response:

Total DPM emissions from on-site solar field and equipment maintenance activities are estimated to be 3.8 lb/yr. On-site solar field equipment includes trucks for mirror washing (3.1 lb/yr), weed abatement (0.2 lb/yr), soil stabilizer applications (0.4 lb/yr), and water trucks (0.1 lb/yr).

The DPM emission factor used for all diesel-fueled on-site solar field maintenance activities from mobile sources was determined to be 0.000119 pounds/mile (lb/mi), based on the EMFAC2007 Model for heavy heavy duty diesel trucks (HHDT-DSL). As described in the responses to DR-AIR-13, DR-AIR-16, and DR-AIR-19 and supporting Attachment DR-AIR-2, the emission factors were compiled by running the California Air Resources Board's EMFAC2007 (version 2.3) Burden Model and dividing calculated daily emissions by daily vehicle-miles-traveled.

DR-PH-174

Information Required:

Please conduct a health risk assessment for diesel emissions from vehicles involved in on-site solar field and equipment maintenance activities during plant operations.

Response:

The HRA from the AFC was revised to incorporate DPM emissions from vehicles involved in on-site solar field and equipment maintenance activities during plant operations. As requested in DR-PH-179, this revised HRA also identified the PMI, using the same fence line receptor grid described in the response to DR-PH-172. Table DR-PH-174-1 presents the maximum expected cancer, chronic non-cancer, and acute health impacts at the PMI, as well as the health impacts at the maximum exposed individual residential receptor (MEIR) and at the maximum exposed individual worker receptor (MEIW). As shown, all estimated health impacts are below SCAQMD significance levels. In addition, the location of the PMI is extremely remote and therefore performing a HRA that assumes continuous presence for the exposure periods outlined below is extremely conservative.

Table DR-PH-174-1 Operational Health Risk Assessment Results

Receptor Type		Maximum Cancer Risk (per million)	Maximum Acute Hazard Index	Maximum Chronic Hazard Index
PMI[1]	Adult	1.35	0.11	0.00076
	Child	0.335	---	---
MEIR[2]	Adult	0.110	0.026	0.000056
	Child	0.027	---	---
MEIW[3]		0.022	---	---
Significance Criteria		**10**	**1**	**1**

[1] PMI: Point of Maximum Impact at any off-site location; 70-year adult exposure scenario and 9-year child exposure

[2] MEIR: Maximum exposed individual at an existing residential receptor; 70-year adult exposure scenario and 9-year child exposure scenario for cancer risk

[3] MEIW: Maximum exposed individual at an existing occupational worker receptor; 40-year adult worker exposure scenario, same impact for non-cancer impacts as shown for the MEIR.

DR-PH-175

Information Required:

Please provide a cumulative PM2.5 emissions estimate on a daily and yearly basis when fugitive dust emissions are added to the DPM emissions from on-site solar field maintenance activities and mobile sources, assuming that all DPM from diesel engines are PM2.5.

Response:

Maximum daily and annual fugitive PM2.5 emissions from on-site solar field maintenance activities are estimated to be approximately 64.9 lb/day and 7,767 lb/yr, respectively. Daily and annual DPM emissions are estimated to be 0.03 lb/day and 3.6 lb/yr, respectively, which are negligible when compared to fugitive (non-exhaust) emissions. The majority (almost 80%) of DPM emissions are from mirror wash trucks.

Therefore, total daily PM2.5 emissions from fugitive dust and equipment exhaust are estimated to be 64.9 lb/day, with 99.9% of the emission mass due to fugitives. Total annual PM2.5 emissions from fugitive dust and equipment exhaust are estimated to be 7,770.5 lb/yr, also with 99.9% of the emission mass due to fugitives. Details on daily and annual PM2.5 mass emissions can be found in the response to DR-AIR-13.

DR-PH-176

Information Required:

Please provide the Kramer Junction Solar Energy Generation facility data used in the AFC, specifically emission rates of benzene and other HTF thermal degradation products emitted.

Response:

Emission rate and speciation data for the Therminol® VP1 heat transfer fluid (HTF) provided in the AFC were developed from several sources of information, including the Kramer Junction SEGS facility operations. Subsequent to filling the AFC, the Applicant's solar design engineer (Flagsol) has provided additional information related to both emission rate and speciation of the HTF degradation products.

Based on an operational mass balance developed by Flagsol for the Ullage system at the proposed PSPP, uncontrolled VOC emissions are expected to be 137 pounds per MW per year. This compares to an uncontrolled VOC emission rate of 133 pounds per MW per year as reported in the AFC, based on comparable thermal solar projects (Beacon Solar Energy Project), and 128 pounds per MW per year for the Nevada Solar One project. Because the Flagsol data are conservatively higher than that of the comparable projects (three to six percent higher), the Applicant maintains a reasonable confidence that these figures are representative of the emission rate that could be expected from PSPP.

Speciation data were developed using information provided by the HTF manufacturer (Solutia) and information provided in the Nevada Solar One permit. Since the PSPP AFC was submitted, Flagsol has provided data that indicate toxic air contaminant emissions from the HTF system could include benzene, toluene, xylene, and phenol. Solutia indicates that the HTF breakdown products would include benzene, toluene, phenol and small amounts of naphthalene, methane, and ethane. The Nevada Solar One permit indicates that the hazardous air pollutant (HAP) emissions from a similar solar energy project would include benzene, benzenol, and biphenyl. In all cases, benzene is the chemical compound potentially emitted from the HTF system with the highest health risk factors for both cancer and non-cancer effects.

A health risk assessment based on 137 pounds of VOC emissions per MW per year is incorporated into the public health risk impacts presented in the response to data request DR-PH-174, which identifies the individual contribution of HTF emissions to the total health risk posed by operation of the proposed power plant. Because benzene is the most toxic of the species reported, and the most likely compound to be emitted due to its chemistry, the operational health risk assessment was revised assuming the increase in VOC emissions would be comprised entirely of benzene to ensure that the health risk estimates were not underestimated. A copy of the WorleyParsons e-mail, Solutia e-mail, the relevant page of the Nevada Solar One permit and the Flagsol material balance diagram and process description are provided in Attachment DR-PH-176.

DR-PH-177

Information Required:

Please provide any other information obtained specific to thermal degradation of HTF, biphenyl and diphenyl ether, and the source of that information.

Response:

As noted in the response to DR-PH-176, AECOM relied on information provided by Solutia, the Therminol® VP1 HTF manufacturer and information provided in the Nevada Solar One permit. In an e-mail from Mr. Conrad Gamble of Solutia to WorleyParsons, Solutia indicates that the HTF breakdown products would include benzene, phenol and small amounts of naphthalene, methane, ethane, and toluene. The Nevada Solar One permit indicates that the HAP emissions would include benzene, benzenol, and biphenyl. Since the PSPP AFC was submitted, Flagsol has provided data that indicate that the HAP emissions would include benzene, toluene, xylene, and phenol. Because benzene is the most toxic of the species reported, AECOM assumed that the vast majority of emissions (99 percent) would be comprised of benzene to ensure that the health risks were not underestimated.

DR-PH-178

Information Required:

> Please provide groundwater concentrations and emission rates for metals present in groundwater from the auxiliary wet cooling towers and conduct a health risk assessment on metals emitted.

Response:

Groundwater samples were collected from well 5S/17E-33N001 located on the Project site in September 2009. The water samples were collected from a tap after the flow meter during the constant-rate discharge test, which had operated for 48 hours. Water samples were analyzed for petroleum hydrocarbons, volatile and semi-volatile organics, pesticides, herbicides, general minerals, metals, radionuclide's (alpha) and other appropriate water quality parameters by a California-certified analytical laboratory, as documented and reported in the AFC Volume 3 Data Adequacy Supplement (DA-WATER-4) submitted October 26, 2009.

Results of the water sampling detected four metals that are considered toxic air contaminants; these include arsenic, chromium (hexavalent), manganese, and zinc (quantitative dose-response factors have not been adopted for zinc, but it is listed as a chemical that requires quantification and therefore provided here). Groundwater concentrations and hourly and annual emission rates are provided in Table DR-PH-178-1 below.

Table DR-PH-178-1 Emission Rates Based on PSPP Water Quality Data

Pollutant	Sample Results	Sample Units	Mass Fraction Pollutant in TDS	Maximum Hourly (lb/hr)	Average Annual (lb/yr)
Arsenic	0.0157	mg/L	1.55E-05	4.70E-07	1.74E-03
Chromium, Hexavalent	0.370	µg/L	3.66E-07	1.11E-08	4.10E-05
Manganese	0.0127	mg/L	1.26E-05	3.80E-07	1.41E-03
Zinc	0.0219	mg/L	2.17E-05	6.55E-07	2.42E-03

A health risk assessment of metal emissions from groundwater used in cooling towers is incorporated into the health risks presented in the response to DR-PH-174. The individual contribution of the revised cooling towers emissions, which incorporate groundwater sampling data, to the total health risk posed by operation of the proposed power plant is 0.033 in one million at the PMI, or 2.5% of the total. These contributions are considered negligible to the total health risk impact from PSPP operation.

DR-PH-179

Information Required:

> Please provide the location(s) of the point of maximum impact predicted in the air dispersion modeling for cancer risk, chronic hazard and acute hazard due to facility operations. Please estimate risk and hazard at the PMI.

Response:

As stated in the response to DR-PH-172, the HRA was revised to identify the PMI, and to estimate the health risks at the PMI. The results of the revised HRA are presented above in Table DR-PH-174-1.

DR-PH-176

HTF Degradation Supporting Documents

Memo

To:	AECOM	Tel no:	+49 (0221) 925 970 0
From:	Flagsol (FL,DT)	Fax no:	+49 (0221) 258 111 7
Subject:	General Description Ullage System	Copy sent to:	SolarMillennium LLC

The HTF (Eutectic mixture of diphenyl oxide and diphenyl) degrades over time in low and high boiling products, which must be separated and eliminated from the cycle.
Low boiling degradation products are a mixture of benzene, toluene, xylene and phenol: the concentration of each component of the mixture can considerably differ from plant to plant and depends on many factors and is can be difficult to determine day-to-day concentrations. A high concentration of low boilers in the HTF changes the fluid properties and increase risk of cavitation for the pumps. In order to limit this effect, a mixture of nitrogen, degradation gases and HTF vapour is vented from the expansion vessel and the overflow vessels. To maintain sufficient pressure within the HTF cycle, nitrogen is introduced in the expansion vessel.
The gaseous mixture of nitrogen, low boiling products and HTF from the expansion vessel enters the ullage system via first ullage vessel, which contains a certain level of HTF at any time. HTF vapour within the mixture is condensed and is re-circulated to the HTF cycle via ullage discharge pump. The HTF content of the first ullage vessel is cooled by recirculation via ullage circulation pump 1 and ullage air cooler 1.
Leaving the first Ullage vessel, residual mixture of gaseous nitrogen and low boiling products enters the second ullage vessel. The HTF content of the second ullage vessel is also cooled (by recirculation via ullage recirculation pump 2 and ullage air cooler 2). By cooling the hydrocarbons within the gaseous mixture will condense to a certain extend. Residual gaseous components are vented to atmosphere.
Mass of collected liquid residuals and vented gas will depend upon the final operating temperature, the previous day operation and the temperature of the system overnight.
To limit the concentration of high boiling degradation products in the HTF cycle, the high boilers can be removed from HTF in the reclamation system. Therefore a small flow of hot HTF is taken from the hot (and pressurized) main pipe which is leaving the solar field and transferred to the reclamation system. The hot HTF immediately vaporizes in the un-pressurized reclamation flash vessel. The so generated HTF vapour is transferred to the first ullage vessel (see above), condensed and returned back to the HTF cycle, the residual non-vaporizing high boilers are left behind in the reclamation flash vessel and collected by gravity in the reclamation drain vessel.
Separation of high boiling products shall be started latest if 9% concentration is reached, unless otherwise noted in the analysis report. It can be up to ten years or more until separation of high boiling products becomes necessary. These are removed as liquid to proper waste recovery handling via truck transport as necessary.

No.			1	2	3	4	5	6	7
Medium			N2/HTF	N2/Low Boilers	HTF	Low Boilers	N2/Low Boilers	N2/Low Boilers	HTF
Mass Flow	100%	kg/s	0 - 0.6	0 - 0.6	0.005	0.005	0 - 0.18	0 - 0.14	0 - 0.003
Density		kg/m3			1014	1040	870	870	1014
Pressure		barg	0.6	0.6					
Temperature		°C	300	80	80	30	30	30	80

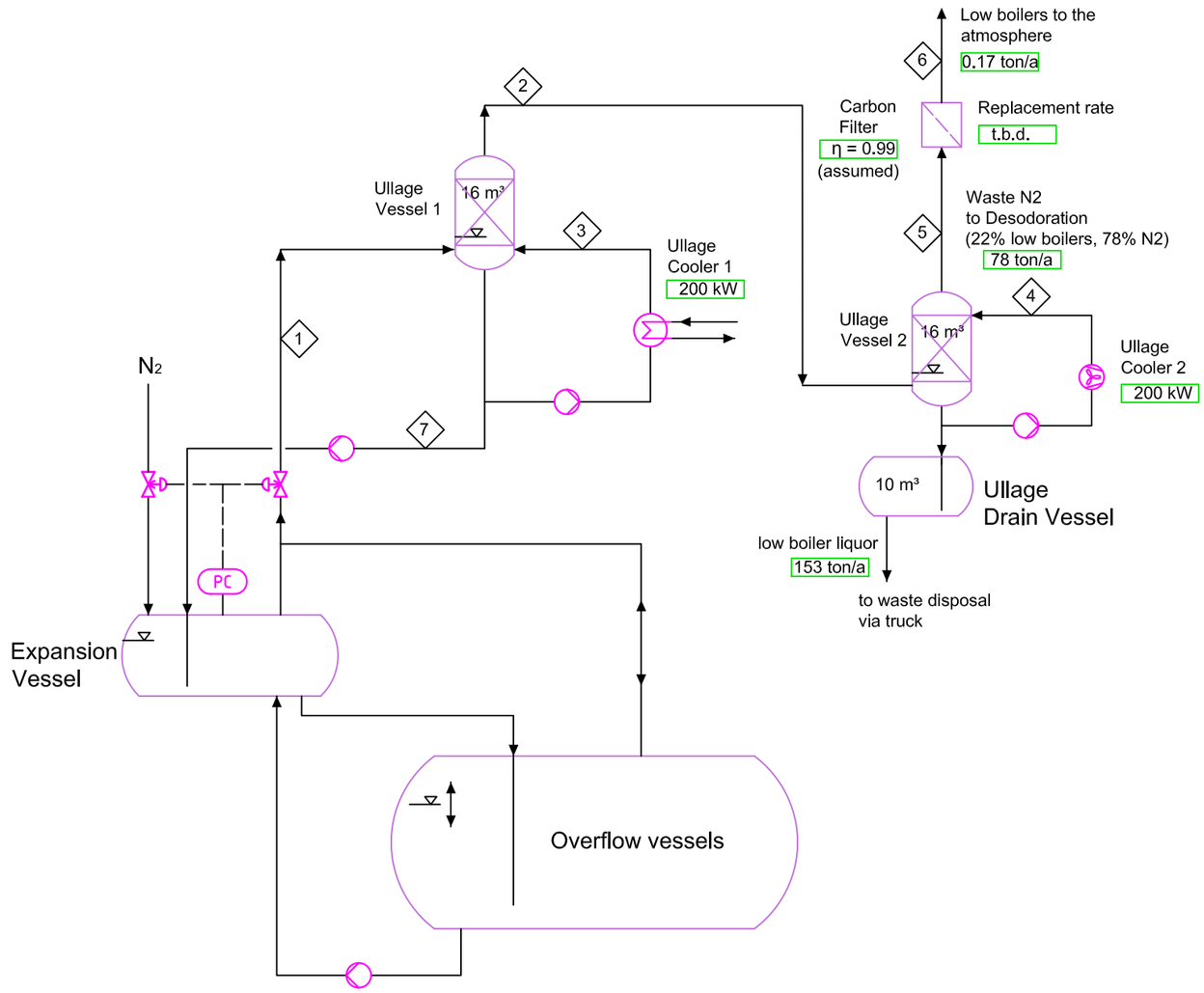

Intellectual Property
Confidential

FOR PERMITS

Solar Millennium LLC

FLAGSOL

FlagSol GmbH
Agrippinawerft 22
D-50678 Köln
Tel.: +49 221 925 970 0
Fax: +49 221 925 970 99

Rev.:	Description	Date	Drawn	Designed	Checked	Approved	Engineering
01	GENERAL REVISION	2009-12-03	VG	FL	FG	UH	
		2009-11-30	VG	FL	FG	UH	

CAD File: PD1_GEN_GEN_PRO_002_00 | First Created

Scale: | Original Size: DIN A2

ALL RIGHTS STRICTLY RESERVED REPRODUCTION OR ISSUE TO THIRD PARTIES IN ANY FORM WHATEVER IS NOT PERMITTED WITHOUT WRITTEN AUTHORITY FROM THE PROPRIETOR

Project: Palen Solar Power Plant

Location: Palen Dry Lake

Document Title: Schematic Process Flow Diagram

Ullage-System

block diagram

Customer Doc - ID:

Sheet: 1 of 1

II EMISSION UNITS

A LIST OF EMISSION UNITS

TABLE II-A-1: Summary of Emission Units

EU	Description	SCC	Type[1]
A01	GTS Energy/TEI Heat Transfer Fluid Heater, M/N: NoxQLN, 60.0 MMBtu/hour	10300602	F1
A02[2]	Disturbed Surfaces	30502507	S1
B01	Cummins Backup Diesel Generator, M/N: DFLC 1250 DQGAA, 1,850 hp	20100102	CE4
B02	Diesel Fire Pump, 120 hp	20100102	DM
C01	Marley Cooling Tower; M/N: F489A-6.0-3; 50,200 gpm; 6,580 mg/l TDS; 0.001% Drift Loss	38500101	P1
D01[2]	Ullage Drain Vessel	2510010000	P1
D02[2]	Waste Oil Truck Loadout	2515030000	DM

[1]Type codes for billing: F1 = Fuel burning equipment; CE4 = Stationary IC engine ≥1,501 hp; DM = Deminimus Emission Unit and P1 = Process equipment. Refer to Section 18 of the for annual fee information.
[2]New emission unit associated with Modification One.

B EMISSION LIMITATIONS

Neither the actual nor the allowable emissions from the individual emission units nor the entire source shall exceed the calculated potential to emit (PTE) as listed in Tables II-B-1 and II-B-2.

TABLE II-B-1: Source PTE (tons per year)

EU	Rating	Conditions	PM_{10}	NO_x	CO	SO_x	VOC	HAP
A01	60.0 MMBtu/Hour	2,000 hrs/yr	0.45	1.05	2.23	0.04	0.32	0.11
A02	400 acres	8,760 hrs/yr	12.12[1]	0.00	0.00	0.00	0.00	0.00
B01	1,850 hp	200 hrs/yr	0.03	5.18	0.41	0.24	0.24	0.09
B02	120 hp	150 hrs/yr	0.02	0.28	0.06	0.02	0.02	0.01
C01	50,200 gpm, 0.001%	4,000 hrs/yr	1.56	0.00	0.00	0.00	0.00	0.00
D01	1,150 acfm	3,500 hrs/yr[2]	0.00	0.00	0.00	0.00	0.41	0.39[3]
D02	1,150 acfm	10,000 gal/yr	0.00	0.00	0.00	0.00	0.04	0.04[4]
PTE (tons/year)			**14.18**	**6.51**	**2.70**	**0.30**	**1.03**	**0.64**

[1]PM_{10} emissions are calculated with an emission factor of 1.66 lbs/acre-day and a control efficiency of 90%.
[2]Hours listed are degradation hours of the Heat Transfer Fluid (HTF).
[3]HAP is the benzene, benzenol, and biphenyl component of VOC of the vent stream from the ullage vessel.
[4]For worst case, the emissions from waste oil loadout is assumed as entirely benzene.

TABLE II-B-2: Source PTE (pounds per hour)

EU	Rating	Conditions	PM_{10}	NO_x	CO	SO_x	VOC	HAP
A01	60.0 MMBtu/Hour	14 hrs/day	0.45	1.05	2.23	0.04	0.32	0.11
A02	400 acres	24 hrs/day	2.77[1]	0.00	0.00	0.00	0.00	0.00
B01	1,850 hp	12 hrs/day	0.29	51.80	4.08	2.41	2.41	0.86
B02	120 hp	5 hrs/day	0.26	3.72	0.80	0.25	0.30	0.06
C01	50,200 gpm, 0.001%	14 hrs/day	0.78	0.00	0.00	0.00	0.00	0.00
D01	1,150 acfm	24 hrs/day	0.00	0.00	0.00	0.00	2.32	2.25[2]

From: Foster, Jared (Sacramento) [Jared.Foster@WorleyParsons.com]
Sent: Wednesday, January 23, 2008 8:22 AM
To: Kingsley, Russ
Cc: Head, Sara; Frederick Redell; Baxter, Geoffrey (Folsom)
Subject: FW: Therminol VP-1 Information

Sara/Russ/Fred,

Here is some information I received from Solutia regarding VP-1 emissions, which is generic. I made a follow-up call with the individual and he mentioned that typically the operator (end user) has more detailed emission information for the product. WorleyParsons can continue to support these activities, but the SEGS plants would be better able to provide the information since they have the most experience operating VP-1 at elevated temperatures.

Also, when I talked with Glen King regarding HTF emissions from the plants and he quoted 10 tons/year. I interpreted this to be for one 30 MW plant. After doing some research and following up with Glen King I determined that the 10 tons was for all the plants at Kramer Junction (5) totaling 150 MW. Since Beacon is a 250 MW plant we expect HTF emissions to be on the order of 17 TONS.

Let me know if you have any questions.

Thanks,

Jared Foster
916.817.3935
Worley Parsons
2330 E Bidwell, Suite 150
Folsom, CA 95630

From: Gamble, Conrad E [mailto:cegamb@solutia.com]
Sent: Thursday, January 17, 2008 10:00 AM
To: Foster, Jared (Sacramento)
Cc: Mansy, Loan N
Subject: Therminol VP-1 Information

Dear Jared,

In follow-up to our conversation last week about expected emissions from high temperature Therminol(R) VP-1 (also called DP:DPO, for diphenyl:diphenyl oxide) systems, I can provide you with the following information. The EPA has a few approved methods for estimating fugitive emissions of organics.

One of the more straight forward methods uses SOCMI (Synthetic Organic Chemicals Manufacturing Industry) emission factors. This method involves using leak factors for each component. Total emissions are estimated by multiplying the number of components times its leak factor, and then summing up the totals for all component types. This method is fully described in Protocol for Equipment Leak Emission Estimates, EPA-453/R-95-017 (link - http://www.epa.gov/ttn/chief/ap42/ch05/index.html Select "Main Document and Appendices near bottom of page). We have used information provided in section 2.3.2 Screening Ranges Approach, and leak emission factors provided in table 2-5, SOCMI Screening Range Emissions Factors (for Heavy Liquid). Please review this section for applicability of the factors. Other methods are described in this document, and you may prefer to utilize one of the other methods depending upon your needs.

Also, we had discussed degradation products of DP:DPO chemistry. As with any high temperature heat transfer fluid, DP:DPO fluids will degrade dependent on a time and temperature relationship. Generally, all systems are not exactly alike and will provide varying rates of thermal degradation. However, the degradation compounds formed should be consistent. Typical low boiling thermal degradation compounds found in thermally stressed DP:DPO fluids will include benzene, phenol, and small amounts of naphthalene, methane, ethane, and toluene. These compounds are lower boiling than the heat transfer fluid itself and will have higher vapor pressures, making them easier to separate from the heat transfer fluid during designed venting procedures. Typical benzene and phenol content in DP:DPO systems can range from 25 to 120 ppm for benzene and 100 to 500 ppm for phenol in typical heat transfer systems. It is possible to have higher concentrations in systems which aren't frequently or effectively vented. Note that venting should be accomplished in a manner to condense and collect the organics for proper disposal.

I trust this information will be helpful in your design development work. Please advise if you have additional questions.

Best regards,

Conrad Gamble, P.E.
Technical Service Principal
Solutia Inc.
Tel (256) 231-8525

(R) Registered trademark of Solutia Inc.
This electronic mail message is intended exclusively for the individual or entity to which it is addressed. This message, together with any attachment, may contain Solutia confidential and privileged information. The recipient is hereby put on notice to treat the information as confidential and privileged and to not disclose or use the information except as authorized by Solutia. Any unauthorized review, printing, retention, copying, disclosure, distribution, retransmission, dissemination or other use of, or taking of any action in reliance upon, this information by persons or entities other than the intended recipient is prohibited. If you received this message in error, please immediately contact the sender by reply email and delete all copies of the material from any computer. Thank you for your cooperation.

*** WORLEYPARSONS GROUP NOTICE ***
"This email is confidential. If you are not the intended recipient, you must not disclose or use the information contained in it.
If you have received this email in error, please notify us immediately by return email and delete the email and any attachments.
Any personal views or opinions expressed by the writer may not necessarily reflect the views or opinions of any company in the WorleyParsons