3.1 INTRODUCTION

This section describes the Solar Two Project and its ancillary systems (Project). The Project will be one of the world's largest solar power projects. It will be owned and operated by SES Solar Two, LLC (Solar Two or Applicant). The Project will consist of approximately 30,000 solar dish Stirling systems (referred to as SunCatchers), their associated equipment and systems, and their support infrastructure. The nominal design electric capacity of the Project is approximately 750 megawatts (MW). The Project Site is approximately 6,500 acres and is located in Imperial County, California (see Figures 1-1 through 1-3).

For the Project, the Applicant will deploy Stirling Energy Systems' (SES's) SunCatcher proprietary technology, which consists of solar concentrating dishes coupled with Solar Stirling Engine Power Conversion Units (PCUs). The SunCatcher technology has been developed, optimized, and matured during the past 20 years. It offers a number of distinct and unique benefits in the production of utility-scale electric power. These advantages include the items listed below.

Performance

- **High Peak Efficiency:** The SunCatcher technology is the world's most efficient solar power to grid-quality electricity system. The SES technology has held the world record since 1984 and in January 2008, SunCatcher broke its own record, achieving a conversion efficiency rating of 31.25 percent.
- **High Part-Load Efficiency:** The Solar Stirling Engine integrated into the SunCatcher delivers high part-load efficiency. Thus, little degradation of conversion efficiency occurs in suboptimal solar conditions, resulting in high annual performance.
- **Durability/Long Life:** This technology has been in operation since 1984 with no appreciable loss in any of the key performance criteria (reflectivity, electrical output, structural integrity, or efficiency). In fact, prototypes have been built and moved to various locations in the 24-year lifetime of the technology with no appreciable degradation in performance.

Modularity Design

Each SunCatcher is a highly efficient, modular, self-contained electricity generator. This leads to the advantages listed below.

- **Immediate Power Production:** This technology allows immediate power production from units or groups of units as they are installed. A key result of this is that the overall cost of the Project is reduced due to the combined impacts of higher efficiencies and earlier generation of electricity during the installation period.
- **High Availability:** The modularity of the Project facilities provides a high degree of redundancy which benefits overall availability. The failure of any specific unit or group of units will not have an adverse effect on the performance of the overall Project. The total annual capacity factor is approximately 25 percent. Based on historical performance discussed above the capacity factor is not expected to diminish appreciably over the lifetime of the units.

- **Terrain Tolerance:** The modularity allows the units to be installed on sloping land with up to a 5 percent grade. This significantly reduces the requirements for grading of sites, thereby minimizing the ground disturbance.
- **Mass Production:** Modularity allows high volume and low cost automotive-style mass production. This type of mass production also provides the opportunity for high-precision, highly consistent quality of manufacturing, which translates into higher reliability of system performance. Another advantage of mass production processing is the ability to work in controlled factory environments that are designed and operated based on lean manufacturing principles. The result is considerably lower levels of waste generation throughout the process, both in manufacturing and site deployment. Furthermore, modularity facilitates recycling and management of the waste generated. An additional benefit is that manufacturing at off-site factories will result in reduced disturbance of the Project Site during installation.

Environmental

- **Water Usage:** The SunCatcher[1] technology does not employ steam in its generation process. In fact, the only water consumption specific to the SunCatcher technology is that required for mirror washing.
- **Emissions:** SunCatchers do not consume fossil fuels; therefore, no combustion emissions are specifically associated with the operation of this technology.
- **Hazardous Materials:** This process and the Project do not require the use of any Class I controlled hazardous materials.

The Project is in an area zoned for open space uses, as specified in the Imperial County General Land Use Plan; however, the Imperial County Land Use Ordinance lists electric generation as an allowed use within the agricultural zone. The area adjoining the Project is primarily undeveloped recreational desert land. Land uses within 1 mile of the Project are almost exclusively open space with rural residential to the east and west and recreational and industrial land uses to the north.

3.1.1 Technology

The Solar Two technology is the most efficient solar-powered electricity-generating technology currently deployed in the world. The SunCatcher electric power generation profile aligns well with utility peak demand requirements and has a predictable "time-of-day" output. Solar insolation, the amount of incoming solar radiation, varies annually from summer to winter, which causes a similar variation in the daily output power of the Project.

Each SunCatcher consists of a PCU and a mirrored-surface dish assembly operating as a solar concentrator that automatically tracks the sun. The dish assembly collects and focuses solar energy onto the PCU to generate electricity. Each PCU consists of a solar receiver heat exchanger and a closed-cycle, high-efficiency Solar Stirling Engine specifically designed to convert solar power to rotary power via a thermal conversion process. The engine drives an

[1] These references are for the SunCatcher systems. Limited water and fuel consumption and vehicle emissions associated with operation and maintenance activities for a utility-scale power plant will still be required.

electrical generator to produce grid-quality electricity. Power generated by the 1.5-MW groups of 60 SunCatchers per group will be collected through a 600-volt underground power collection system. This collection system will combine the output from the units and connect each 1.5-MW group to a generator step-up unit (GSU) transformer with an output voltage of 34.5 kilovolt (kV). The output from the GSUs will be grouped into 3-, 6-, and 9-MW groups, which will be connected via 34.5-kV underground collection circuits to 48- or 51-MW, 34.5-kV overhead collection circuits, each of which will be connected directly to the on-site collection substation. The on-site collection substation will be connected via a 230-kV, double-circuit overhead interconnection transmission line for delivery of generated electricity to the San Diego Gas & Electric (SDG&E) Imperial Valley Substation, where the interconnect to the California Independent System Operator (CAISO)-controlled grid will take place.

3.1.2 Project Summary

The Project will include the construction of a new 230-kV substation approximately in the center of the Project Site. The Project design will minimize land disturbance, and the Project will operate with no fossil-fuel emissions from the electric generation process. Raw water will be stored on-site for all operational needs. Most storm water will be passed through the site utilizing existing dry washes and without any significant diversions or retention. A very small amount of rainfall runoff will be collected and percolated into the ground. These activities will be conducted at the Main Services Complex, where key buildings and parking areas will be located. Main roads will be constructed with a combination of roadway dips and elevated sections across the dry washes. A stem pipe concept is used at some of these crossings; the stem pipes will retain a small amount of water, which will be percolated into the ground. The sanitary system will consist of a buried septic tank system with a dual sanitary leach field.

The Project will be constructed in two phases. As shown on Figure 3-1, Solar Two – Site Plan – Phase I – During Construction, Phase I of the Project will consist of up to 12,000 SunCatchers configured in 200 1.5-MW solar groups of 60 SunCatchers per group that will have a net nominal generating capacity of 300 MW. As shown on Figure 3-2, Solar Two – Site Plan – Phase II – During Construction, and Figure 3-3, Solar Two – Site Plan – Post-Construction, Phase II will expand the Project to 30,000 SunCatchers configured in 500-1.5-MW solar groups with a total net generating capacity of 750 MW. The Project will be connected to the SDG&E Imperial Valley Substation via an approximate 10.3-mile, double-circuit, 230-kV transmission line. Other than this interconnection transmission line, no new transmission lines or off-site substations will be required for the 300-MW Phase I construction. The full Phase II expansion of the Project will require the construction of the 500-kV Sunrise Powerlink transmission line project proposed by SDG&E. Within the Project boundary, Phase I requires approximately 2,600 acres and Phase II requires approximately 3,500 acres. The total area required for both phases, including the area for the operation and administration building, the maintenance building, and the substation building, is approximately 6,500 acres. Moving to the southeast, the 230-kV transmission line that will be built for Phase I will parallel the Southwest Powerlink transmission line within the designated right-of-way (ROW). Moving to the northeast, a water supply pipeline for the Project will be built on the approved Union Pacific Railroad ROW (see Appendix D, Union Pacific Railroad Right-of-Way Letter). The Applicant has applied for a

ROW grant for the Project Site from the Bureau of Land Management (BLM) California Desert District. Although the Project is phased, it is being analyzed in this Application for Certification as if all phases will be operational at the same time.

The main entry for truck traffic to the Project Site during construction will be from Interstate 8 (I-8) to the Project entrance on Dunaway Road. Traffic will exit the Project Site at the north end of the site onto the Evan Hewes Highway. During Project operation, the main access (entry and exit) to the site will be from Evan Hewes Highway on the north side of the Project Site and to the east of the existing SDG&E transmission line. During Project operation, the secondary and emergency access will be from Dunaway Road.

3.2 LOCATION OF THE PROJECT

The Solar Two Project Site is located primarily on federal land managed by the BLM. The Project Site is approximately 100 miles east of San Diego, 14 miles west of El Centro, and 4 miles east of Ocotillo. The following sections or portions of sections in Township 16 of the San Bernardino Meridian identify the Project Site and the planned boundary for development of the Solar Two Project.

Within Township 16 South, Range 11 East of the San Bernardino Meridian defined by:

- the portion of Section 7 south of the railroad ROW,
- the portion of the southwest quarter section and the north half of the southeast quarter section of Section 9 south of the railroad ROW,
- the southeast quarter-quarter section of the northeast quarter section and the east half of the southeast quarter section of Section 14 north of the I-8 ROW and east of Dunaway Road,
- the southwest, northwest, and southeast quarter-quarter sections of the southwest quarter section of Section 15, and the southwest quarter-quarter of the southeast quarter section of Section 15,
- the northwest quarter and southeast quarter of Section 16,
- all of Section 17,
- Section 18, excluding the southwest and southeast quarter-quarter sections of the northeast quarter section,
- the northwest quarter and the portion of the west half of the southwest quarter of Section 19 north of the I-8 ROW,
- the portion of Sections 20 and 21 north of the I-8 ROW, and
- the portion of the north half of the northwest quarter section and the northwest quarter-quarter section of the northeast quarter section of Section 22 north of the I-8 ROW.

Township 16 South, Range 10 East defined by:

- the portions of Sections 12, 13, and 14 south of the railroad ROW,
- the portions of Section 22 south of the railroad ROW,

- all of Sections 23 and 24, and
- the portions of Sections 25, 26, and 27 north of the I-8 ROW.

An off-site 6-inch-diameter water supply pipeline will be constructed a distance of approximately 3.40 miles from the Imperial Irrigation District (IID) Westside Main Canal to the Project boundary as shown on the Figure 3-4, Utility Plan – Off-Site Utility Service. The water supply pipeline will be defined by a linear survey and will be routed in the Union Pacific Railroad ROW, or adjacent to this ROW on federal and private lands, through portions of the following sections:

- Township 16 South, Range 11 East, Sections 10, 11, and 12, and
- Township 16 South, Range 12 East, Section 7.

An off-site double-circuit generation interconnection transmission line will be constructed a distance of approximately 7.56 miles to connect the Solar Two Project to the SDG&E Imperial Valley Substation as shown on the following figures:

- Figure 3-5, 230-kV Transmission Line, Part A, Phase I,
- Figure 3-6, 230-kV Transmission Line, Part A, Phase II,
- Figure 3-7, 230-kV Transmission Line, Part B, and
- Figure 3-8, 230-kV Transmission Line, Part B, Under Crossing Detail.

The double-circuit transmission line will be defined by a linear survey and will be routed through portions of the following sections:

- Township 16 South, Range 11 East, Sections 22, 23, 25, and 26,
- Township 16 South, Range 12 East, Sections 30, 31, and 32, and
- Township 17 South, Range 12 East, Sections 3, 4, and 5.

Electric and communications utility services for the Main Services Complex will be constructed in Township 16 South, Range 11 East in Sections 7 and 18 to the overhead utility lines located on the north side of Evan Hewes Highway. These utility ROWs will be defined by linear surveys and are shown in the Figure 3-9, Utility Plan – On-Site Utility Service.

A site access road will be constructed from Dunaway Road to the eastern boundary of the Project Site, as shown on Figure 3-3, Solar Two – Site Plan – Post Construction. The site access road will generally follow an existing BLM road, will be defined by a linear survey, and will be routed through portions of Township 16 South, Range 11 East, Sections 14 and 15.

3.3 PROJECT SITE DESCRIPTION

3.3.1 Existing Site Conditions

The Solar Two Project is located in Imperial County in Southern California. The Project will be located on approximately 6,140 acres of land requested to be authorized under a ROW permit from the BLM to Solar Two and approximately 360 acres of private land, which will be either purchased or leased by Solar Two.

The Project Site currently primarily consists of undisturbed desert alluvial sands and desert flora and includes some parcels of private land. Two private parcels of land, one owned by a recreational vehicle club and one by a private landowner, are surrounded by the Project and are not a part of the Project, as shown on the Figure 3-3, Solar Two – Site Plan – Post Construction. Access to these parcels of land will be provided via the arterial roadway system within the Project.

A known fault (the Yuha Wells fault) traverses a portion of the Project Site from the southwest to the northeast (approximately 32.8 degrees north and 115.9 degrees west). Also, an existing SDG&E transmission line traverses the site from the northwest to the southeast. North of the site is the USG Corporation Gypsum Wallboard Manufacturing Facility (also known as Plaster City), which is located on Evan Hewes Highway approximately 3 miles west of the intersection of Dunaway Road and Evan Hewes Highway.

The ground surface at the Solar Two Project Site slopes northeast.

The western portion of the Project Site (west of the SDG&E transmission line) is characterized by rolling terrain with well-defined washes. East of the SDG&E transmission line, the terrain has uniform and gentle slopes.

The area adjoining the Project is primarily undeveloped recreational desert land. Other land uses in the area surrounding the Project Site include BLM-administered public land zoned for multiple use, agricultural, residential, industrial, and recreational.

3.3.2 Site Surveys

A detailed land survey will be performed to establish local benchmarks and Project Site boundaries. A topographic survey was performed that will be used establish the site's grading and drainage plans and to determine final placement of SunCatchers, roadways, and other Project features. A preliminary geotechnical report was performed to evaluate general surface conditions; basic subsurface conditions, seismicity, and the other geological information necessary to develop recommendations for the design and construction of foundations, aboveground structures, and equipment (see Section 5.3, Geologic Hazards and Resources, and Appendix E, Preliminary Geotechnical and Geologic Hazards Evaluation).

3.4 PROJECT DESCRIPTION

This section describes the Project Site arrangement, the Project conceptual design, Project processes, and the operation of the Project. All Project facilities will be designed, constructed, and operated in accordance with applicable laws, ordinances, regulations, and standards (LORS). Computer-generated photo simulations of the Project are shown on Figures 3-10A through 3-10C. Figure 3-10A is a full-page color photographic reproduction depicting the visual appearance of the existing Project Site. Figure 3-10B is a color simulation depicting the Project Site and all ancillary features after construction. Due to the large size of the Project Site, Figure 3-10C provides a close-up simulation of the southeast corner of the Project Site looking west, after construction.

3.4.1 Project Site Arrangement

The site plan for the Project is as shown on Figure 3-3, Solar Two – Site Plan – Post Construction. The basic building block for the Project is a 1.5-MW solar group consisting of 60 SunCatchers, as shown on Figure 3-11, Solar Two 1.5-MW Solar Group Plan. The 1.5-MW groups will be connected in series to create 3-, 6-, and 9-MW solar groups. A typical 9-MW group is shown on Figure 3-12, Solar Two 9-MW Solar Group Plan. The 3-, 6-, and 9-MW groups will be connected to overhead collection lines rated at 48 MW or 51 MW. A typical 18-MW solar group showing two 9-MW groups connected to the overhead collection lines is shown on Figure 3-13, Solar Two 18-MW Solar Group Plan. Typical elevation views of a 6-MW portion of the solar field are provided on Figure 3-14, Solar Two Typical Elevation View. The typical solar groups will be arranged as necessary to fit the contours of the site. These figures illustrate the location, equipment arrangement, and size of the generation equipment for the Project.

The entire working Project will be fenced while still protecting sensitive ecological areas. The Project will have two laydown areas. One laydown area will be located on approximately 100 acres east of Dunaway Road and north of I-8. The other laydown area will be located on approximately 11 acres adjacent to and immediately south of the Main Services Complex.

The fenced boundary of the Project will encompass approximately 6,049 acres of land, not including the private parcels of land designated as not a part of the Project. Access to the federal land managed by the BLM will be authorized under a ROW permit. Appendix C, Property Owners Within 1,000 Feet of Project Site, contains a list of the current assessor parcel numbers and the owners' names and addresses for all parcels within 1,000 feet of the Project and its ancillary facilities.

During Project construction, the main entry to the Project Site will be from the east, from Dunaway Road; the main exit from the Project Site will be to the north, onto the Evan Hewes Highway. During Project operation, main site access (entry and exit) will be from Evan Hewes Highway from the north of the site via Dunaway Road and I-8. Secondary access will be from the east via Dunaway Road and I-8. The following roadways will be constructed on the Project Site: approximately 27 miles of paved arterial roads, approximately 14 miles of unpaved perimeter roads, and approximately 234 miles of unpaved access routes. The paved arterial roads will reduce fugitive dust while allowing full access to all dishes and infrastructure. Polymeric stabilizers may be used in lieu of traditional road construction materials for paved roads and/or to stabilize unpaved roads. All access to the Project Site will be through controlled gates.

3.4.2 Major Equipment

Table 3-1, Major Equipment List, and Table 3-2, Significant Structures and Equipment, list the major equipment and significant structures required for the Solar Two Project, respectively.

Table 3-1
Major Equipment List

Description	Quantity	Size/Capacity	Remarks
SunCatcher power generating system	30,000	25 kWe	Focuses solar energy onto a Power Conversion Unit to generate 25 kWe of electricity
Generator collection sub-panel; distribution panel, 42 circuit, with circuit breakers in a weatherproof enclosure	2,500	400 A, 600 V	Collects the output from 12 Stirling dish assemblies (one 300-MW solar group). Each dish assembly connects to a 40-A, three-pole circuit breaker (36 poles).
Generator collection power center, distribution switchboard with six 400-A circuit breakers	500	2,000 A Bus, 600 V	Collects five 1.5-MW solar groups and connects one power factor correction capacitor group.
Collector group generator step-up unit (GSU) transformer, with taps	500	1,750 kVA, 575 V to 34.5 kV	Step up power from 1.5-MW solar group (60 Stirling dishes assemblies).
Power factor correction capacitor, switched in five each 200 kVAR steps	500	1,000 kVAR, 600 V	Provides power factor correction at the 1.5-MW solar group level.
Open bus switch rack, five 1,200-A feeder breakers, 40-kA INT, with switches, insulators, and bus work	5	34.5 kV, 3,000A	Each switch rack lineup collects 150 MW at 34.5 kV.
Shunt capacitor bank, switched in six 15-MVAR steps	5	34.5 kV, 90 MVAR	Provides power factor correction at the 150-MW solar group level.
Dynamic VAR (DVAR) compensation system in coordination with shunt capacitor banks; size to be determined by studies	1	34.5 kV, size to be determined	Provides active VAR compensation to maintain required power factor profile and to aid in meeting low-voltage ride-through requirements.
Disconnect switch, 35 kV, 200 kVBIL, group-operated	10	35 kV, 3,000 A	Provides capability to isolate power transformer from the 34.5-kV collection system.
Power transformer, three-phase, oil filled	5	120/160/200 MVA, 230/132.8 to 134.5/19.9 kV, 750 kV BIL	Step up power from 34.5-kV collection voltage to 230-kV transmission voltage.
Power circuit breaker	7	242 kV, 2,000 A, 40-kA interrupting capacity	Transformer and line protection.
Coupling capacitor voltage transformer	6	242 kV, 900 kV BIL, 60 Hz, PT Ratio 1,200/2,000:1	Voltage source for protection and control.
Disconnect switch, 242 kV, 900 kV BIL, group operated	10	242 kV, 2,000 A	For isolation of the power transformers, breakers and for isolating the substation from the interconnect transmission lines.

Table 3-1
Major Equipment List

Description	Quantity	Size/Capacity	Remarks
Diesel power generator set	1	250 kW, 480 V	Installed at Main Services Complex
Fire water pump, diesel	1	26 HP	Installed at Main Services Complex
Water Treatment	1	64,000 gpd	Automatic reverse osmosis system

Source: SES Solar Two, LLC, 2008.

Notes:

A = ampere (amp)
BIL = basic impulse level
gpd = gallons per day
HP = horsepower
Hz = hertz
INT = international
kA = kilo amps
kV = kilovolt
kVA = kilovolt amps
KVAR = kilovolt amp reactive
kW = kilowatt
kWe = kilowatt-electric
MVA = mega volt amps
MVAR = mega volt amp reactive
MW = megawatts
V = volts
VAR = volt amp reactive
W = watts

Table 3-2
Significant Structures and Equipment

Description	Quantity	Length (feet)	Width (feet)	Height (feet)
SunCatcher power generating system	30,000	38	40	38
Main Services Complex administration building	1	200	150	14
Main Services Complex maintenance building	1	180	250	44
Main SunCatcher assembly building	3	211	170	78
Raw water storage tank, 175,000 gallons	1	40		20
Demineralized water tank, 175,000 gallons	2	40		20
Potable Water Tank, 17,000 gallons	1	18		10
230-kV transmission line towers, double-circuit with upswept arms	85 to 100	--	32	90 to 110
Generator collection sub-panel; distribution panel, 42 circuit, 400 A, 600 V, with circuit breakers in a weatherproof enclosure	2,500	1	2.67	5
Generator collection power center, 2,000-A distribution panels with six 400-A circuit breakers	500	2	3.33	7.5
Collector group generator step-up unit transformer (GSU), 1,750 kVA, 575 V to 34.5 kV, with taps	500	6.67	7.5	6.67
Power factor correction capacitor, 600 V, 1,000 kVAR, switched in five, each 200 kVAR steps	500	2.5	6.67	7.5
Open bus switch rack, 35 kV, 7 bay with five 35-kV, 1,200-A, 40-kVA INT, circuit breakers, insulators, switches, and bus work	5	105	20	30

Table 3-2
Significant Structures and Equipment

Description	Quantity	Length (feet)	Width (feet)	Height (feet)
Shunt capacitor bank, 34.5 kV, 90 MVAR switched in six each 15 MVAR steps	6	15	8	20**
Dynamic VAR (DVAR) compensation system in coordination with shunt capacitor banks – size to be determined by studies	4	60	12	16
Disconnect switch, 35 kV, 3,000 A, 200 kV BIL, group-operated	5	3	11	16**
Power transformer, three phase, 100/133/166.7 mega volt amp, 230/132.8-34.5/19.9 kV, 750 kV BIL, oil filled	5	15	35	23
Power circuit breaker, 242 kV, 2000A, 40 kilo amp interrupting capacity	7	12	20	16
Coupling capacitor transformer for metering, 242 kV, 900 kV BIL, 60 Hertz, Potential Transformer ratio 1,200/2,000:1	6	1	1	25**
Disconnect switch, 242 kV, 2000A	10	10	25	25**

Source: SES Solar Two, LLC, 2008.
Notes:
**Includes structure height to provide electrical safety clearances to ground.
-- = not applicable
A = ampere (amp)
BIL = basic impulse level
INT = international
kV = kilovolt
kVA = kilovolt amp
kVAR = kilovolt amp reactive
MVAR = mega volt amp reactive
v = volts

3.4.3 Power Process Description

The Project will consist of approximately 30,000 SunCatchers. Each SunCatcher will produce up to 25 kW net of grid-quality electricity at 575 volts alternating current. The Project will be electrically designed as 500 1.5-MW, three-phase, 60-hertz, solar groups. Each complete solar group will consist of 60 SunCatchers, which correlates to a 1.5-MW power block with a corresponding GSU transformer (see Figure 3-15, 1.5-MW Solar Group Electrical One-Line Diagram, Sheet 1, and Figure 3-16, 1.5-MW Solar Group Electrical One-Line Diagram, Sheet 2). The GSU transformer will step the voltage up to 34.5 kV.

The 1.5-MW solar groups will be connected by underground electrical cables to create the 3-, 6-, and 9-MW solar groups. Two typical 9-MW groups are shown on Figure 3-17, Solar Two – 18-MW Feeder Group General Arrangement. Five 9-MW groups and one 3-MW group will be connected by underground electrical cables and a pole riser to an overhead collector line rated for 48 MW. Five 9-MW groups and one 6-MW solar group will be connected by underground electrical cables and a pole riser to an overhead collector line rated for 51 MW (Figure 3-18, Solar Two – 51-MW Feeder Group General Arrangement). The overhead collector groups will deliver the solar electric–generated power to the Solar Two Project substation.

The solar groups will operate daily from sunrise to sunset; they will come out of the stowed position after sunrise once the solar insolation reaches a minimum of 250 watts per square meter (W/m^2). Full power output is achieved when solar insolation reaches 1,000 W/m^2. The solar field will operate until dusk unless adverse weather events occur (e.g., storms, periods of sustained clouds, or sustained wind conditions greater than approximately 35 miles per hour).

At dusk or when clouds reduce solar insolation to below a minimum of 250 W/m^2, the SunCatchers will be moved into the night-stow position. During periods of sustained high winds (exceeding 35 miles per hour), the SunCatchers will be moved into the wind stow position.

Each SunCatcher has an on-board control system that utilizes proprietary control systems to control the PCU and the dish. The on-board controllers will be supervised by a Supervisory Control and Data Acquisition (SCADA) system. The SCADA system will include central processors and an operator interface located in the central control room, communications, and data logging servers and dish-group servers located throughout the solar field. The various components of the SCADA system and the on-board controllers on each SunCatcher will be interconnected with a system of underground and overhead fiber optic cables that will generally be routed together with the electrical collection system cables.

3.4.4 Description of Technology

The solar dish Stirling technology is well beyond the research and development phase, with more than 20 years of recorded operating history. The equipment is well characterized with over 45,000 hours of on-sun time. Since 1984, the solar dish Stirling equipment has held the world's efficiency record for converting solar energy into grid-quality electricity. This record was achieved when the technology was installed in Huntington Beach, California. Solar Two coordinated with the U.S. Department of Energy and Sun-Labs (National Renewable Energy Laboratory and Sandia National Laboratories) to conduct an endurance test of the solar dish Stirling system and to bring the technology to market.

The history of the development of the Solar Stirling Engine is provided in Appendix B, Solar Stirling Engine.

3.4.4.1 SunCatcher Technology

The SunCatcher is a 25-kilowatt-electrical (kWe) solar dish Stirling system designed to automatically track the sun and collect and focus solar energy onto a PCU, which generates electricity. The system consists of a 38-foot-high by 40-foot-wide solar concentrator in a dish structure that supports an array of curved glass mirror facets. These mirrors collect and concentrate solar energy onto the solar receiver of the PCU.

The PCU converts the focused solar thermal energy into grid-quality electricity. The conversion process in the PCU involves a closed-cycle, high-efficiency four-cylinder, 35-horsepower reciprocating Solar Stirling Engine utilizing an internal working fluid of hydrogen gas that is recycled through the engine. The Solar Stirling Engine operates with heat input from the sun that is focused by the SunCatcher's dish assembly mirrors onto the PCU's solar receiver tubes, which contain hydrogen gas. The PCU solar receiver is an external heat exchanger that absorbs the incoming solar thermal energy. This heats and pressurizes the hydrogen gas in the heat exchanger tubing, and this gas in turn powers the Solar Stirling Engine.

A generator is connected to the Solar Stirling Engine; this generator produces the electrical output of the SunCatcher. Each generator is capable of producing 25 kWe at 575 volts alternating current (VAC)/60 hertz (Hz) of grid-quality electricity when operating with rated solar input. Waste heat from the engine is transferred to the ambient air via a radiator system similar to those used in automobiles.

The hydrogen gas is cooled by a standard glycol-water radiator system and is continually recycled within the engine during the power cycle. The conversion process does not consume water, as is required by most thermal-powered generating systems. The only water consumed by the SunCatcher is for washing of the mirrors to remove accumulated dust and replenishing small losses to the cooling system radiator in a 50-50 glycol-water coolant.

Thousands of SunCatchers constitute a single power plant, making the Project modular and scalable. Installed units will produce power while the remainder of the Project is under construction. Maintenance will be done on individual units while the vast majority of the units remain online; the result is high overall availability.

The SunCatcher technology uses no fuel other than heat from the sun, is emissions free, and uses a tiny fraction of the water required by traditional power plants. For this reason, the Project will have less impact on the environment than traditional generation technologies while providing a clean, efficient, reliable source of energy to SDG&E customers.

3.4.4.2 SunCatcher Components

The SunCatcher has three major components: the foundation/pedestal, the dish assembly, and the PCU.

Foundation/Pedestal

The solar dish will typically be mounted on a foundation consisting of a metal fin-pipe that is hydraulically driven into the ground. This foundation is preferred because no concrete is required, no spoils are generated, and the foundations can be completely removed when the Project is decommissioned. The metal fin-pipe foundation creates minimal disturbance to the environment. When conditions are not conducive to the use of the metal fin-pipe foundation, the foundation will consist of rebar-reinforced concrete constructed below grade. Figure 3-19, Integrated Metal Fin Pipe Foundation/Pedestal, illustrates the metal fin-pipe foundation.

Both of these foundation designs meet all applicable structural design requirements and applicable LORS.

The SunCatcher pedestal on which the SunCatcher Dish Assembly is secured is approximately 18 feet 6 inches in height and will be an integrated part of the metal fin-pipe foundation or will be a separate structure fastened to the rebar-reinforced concrete foundation at ground level.

Dish Assembly

The SunCatcher Dish Assembly is fitted with a trunnion that attaches to the pedestal. Each Dish Assembly consists of a 38-foot by 40-foot steel structure that supports an array of curved glass mirror facets. These mirrors form a curved shape engineered to concentrate solar energy onto the solar receiver portion of the PCU. The Dish Assembly includes azimuth and elevation drives for tracking the sun and a PCU support boom.

The SunCatcher Dish Positioning Control System employs proprietary algorithms to track the sun. This system focuses the solar energy onto the solar receiver by controlling elevation and azimuth drives, and executes startup, shutdown, and de-track procedures. These procedures allow the dish to "wake up" from the night-stow position in the morning to focus the dish mirror facets on the solar receiver of the PCU, and then to track the sun during the daylight operating time of the Project. The dish control system also communicates with and receives instructions from the central control room via the SCADA system. The system is designed to place the dish into a "wind stow" position when sustained winds exceed 35 miles per hour to protect the system from wind damage. The system also places the dish into "wind stow" position on loss of communications with the central control room or on receipt of a fault signal from the PCU control system.

Power Conversion Unit

The SunCatcher PCU converts the solar energy into grid-quality electricity. Hydrogen gas is used in a closed-cycle heating/expansion – cooling/compression cycle to drive a high-efficiency, 380-cubic-centimeter displacement, four-cylinder reciprocating Solar Stirling Engine. The Solar Stirling Engine powers an electrical generator that produces 25 kWe net output after accounting for on-board parasitic loads at 575-volt alternating current, 60 Hz of grid-quality electricity. The PCU attaches to the end of the PCU boom.

The dimensions of the PCU are approximately 88 inches (7 feet) long by 63 inches (5 feet) wide by 37 inches (3 feet) high. The PCU weighs approximately 1,400 pounds.

The PCU consists of six subsystems: solar receiver, Solar Stirling Engine, generator; cooling system, gas management system, and the PCU control system. Each subsystem is described below.

- **Solar Receiver:** The SunCatcher solar receiver consists of an insulated cavity with an aperture that allows the solar energy to enter. Within the cavity are four heater heads. Each heater head forms a tube network for one quadrant of the engine. The solar flux, radio energy from the sun, heats the metal tubes and the heat is then transferred through the tubes to the working hydrogen gas. The heat absorbed at the solar receiver drives the Solar Stirling Engine.
- **Solar Stirling Engine:** The kinematic Solar Stirling Engine has evolved from a Kockums kinematic Solar Stirling Engine design. Kockums, the world's leader in kinematic Solar Stirling Engines, has invested significant development into the design, efficiency, and reliability of this type of Solar Stirling Engine since purchasing the technology in 1970. The Kockums kinematic Solar Stirling Engine is used as a propulsion source for submarines and is highly reliable, low maintenance, and highly efficient. Solar Two has further developed and improved the engine design specifically for use in the SunCatcher.

- **Generator:** A generator is connected to the Solar Stirling Engine to produce the electrical output of the SunCatcher. The PCU generator attached to each Solar Stirling Engine is capable of producing up to 25 kWe at 575 VAC, 60 Hz of grid-quality electricity when operating with a solar input of between 250 and 1,000 W/m^2. The generator output is connected to the power collection system.
- **Cooling System:** Waste heat from the hydrogen gas within the engine is transferred to the ambient air via a radiator system similar to the type used in automobiles. The SunCatcher cooling system is made up of ethylene-glycol fluid, a cooler in the gas circuit, a radiator, a fluid circulation pump, and a cooling fan. The cooling fan and circulation pump are driven by electric motors.

  The system is used to cool the hydrogen gas before the compression portion of the cycle. The pump circulates the cooling fluid through the gas cooler and radiator. Waste heat from the hydrogen gas is transferred to the ethylene-glycol fluid in the cooler. The coolant is then pumped through the radiator where the fan forces ambient air over the cooling fins to remove heat. The heat is transferred to the atmosphere via the airflow over the radiator.
- **Gas Management System:** The gas management system controls the working pressure to ensure high efficiencies. The hydrogen gas is contained within a closed and sealed cycle, yet a very small amount of the hydrogen working fluid does leak (less than 200 cubic feet per dish per year) by the rod seals and is lost to the atmosphere. As a result, one hydrogen gas cylinder containing approximately 195 cubic feet (k-bottle) is supported from the base of the PCU boom. This cylinder replenishes the lost hydrogen gas within the gas circuit. Refilling the hydrogen gas cylinder is a scheduled maintenance activity.
- **Control System:** The SunCatcher PCU control system monitors, controls, and communicates PCU performance. Thermal detectors are monitored by the PCU control system and the data are used to control the thermal balancing of the PCU. Alarms and faults monitored by the PCU control system are communicated to the Dish Positioning Control System and the Project SCADA system.

3.4.5 Electrical System Description

This section describes the major electrical systems and equipment for the Solar Two Project. A small amount (less than 3 percent) of the Project output will be lost to electrical losses in the collection system. A very small amount (less than 0.1 percent) will be used in the Project substation for instrumentation, controls, lighting and heating, ventilating, and air-conditioning. Most of the output will be delivered to the regional electric grid through the interconnection with the SDG&E transmission system. The 25-kWe rated net output of the SunCatchers takes into account the on-board auxiliary loads such as the azimuth and elevation drives, the cooling fan, the cooling pump, and the controls systems. The Project buildings and auxiliary structures may receive electrical power via separate electrical services from IID.

3.4.5.1 Major Electrical Equipment and Systems

The Project includes construction of a substation, which will include transformers, circuit breakers, metering, and other protection required to connect the Project to the SDG&E Imperial Valley Substation. The Solar Two Project interconnect transmission system will require construction of approximately 10.30 miles of double-circuit 230-kV transmission line.

Up to 30,000 SunCatchers will produce electrical power at 575 volts (V). Power will be collected at the 575-V level in groups of 60 SunCatchers by an underground collection system. The voltage will be stepped up to 34.5 kV by a GSU transformer.

Power will be collected at the 34.5-kV level by a combination of underground cables and overhead collection lines and will be delivered to the Project substation, where the voltage will be stepped up to 230 kV for transmission to the Imperial Valley Substation and connection to the grid.

3.4.5.2 Electrical Collection System

This section describes the electrical collections system that collects power from the distributed generators and delivers it to the on-site substation for transmission to the SDG&E Imperial Valley Substation.

The following single-line diagrams illustrate the overall generation and distribution system for the Project:

- Figure 3-15, 1.5-MW Solar Group Electrical One-Line Diagram, Sheet 1,
- Figure 3-16, 1.5-MW Solar Group Electrical One-Line Diagram, Sheet 2,
- Figure 3-17, Solar Two – 18-MW Feeder Group General Arrangement, and
- Figure 3-18, Solar Two – 51-MW Feeder Group General Arrangement.

Power will be produced at 575 V by the PCU generators. The output from 12 SunCatcher PCU generators will be collected at a local 600 VAC, 400-ampere (A) collector panel-board via underground cables. Five local collector panel-boards will be wired to a 600-VAC, 2,000-A collector switchboard via underground cables to constitute a complete 60-unit, 1.5-MW solar group. Local capacitor banks will be connected at each 1.5-MW, 2,000-A solar group collector switchboard for volts-amps reactive control and power factor correction.

Each local collector switchboard described above will be connected to the low-voltage side of a 1,750-kVA GSU transformer that steps voltage up to 34.5 kV. GSUs will be connected together at 34.5 kV via underground cables in strings of two to create a 3-MW group, strings of four to create a 6-MW group, and strings of six to create a 9-MW group. Two typical 9-MW groups are shown in Figure 3-17, Solar Two – 18-MW Feeder Group General Arrangement. Five 9-MW groups and one 3-MW group will be wired via underground cables and a pole riser to a 34.5-kV overhead collection line rated for 48 MW. Five 9-MW groups and one 6-MW group will be wired via underground cables and a pole rise to a 34.5-kV overhead collection line rated for 51 MW.

A total of five 48-MW collection lines and ten 51-MW collection lines will be constructed. Two overhead quad-circuit pole lines, one overhead triple-circuit pole line, and two overhead double-circuit pole lines will connect the overhead collection lines to the 34.5-kV to 230-kV collector substation. Power step-up transformers at the Solar Two Project substation converts the 34.5-kV collection voltage to the 230-kV interconnection voltage in net 150-MW groups.

All of the electrical equipment described above will be specified for operation in a 55 degree Celsius ambient temperature to ensure reliability and longevity.

An elevation view of a 6-MW solar group is shown in the Figure 3-14, Solar Two Typical Elevation View.

3.4.5.3 Direct Current Power Supply System

SunCatcher controls and drive motors will be powered at 24 volts direct current (VDC) from a battery/battery charger system. This system will consist of a local battery/battery charger system at each pair of SunCatchers. The backup direct current (DC) power supply will maintain control power and provide the ability to slew the SunCatcher to a safe stow position in the event of a grid outage.

Each 230-kV substation will have 125-VDC systems to feed the 230-kV breaker controls, the step-up transformer controls, and the substation metering and relay circuits. The substation DC systems will consist of one battery, one charger, and one DC panel-board in each of the 34.5-kV switchgear prefabricated metal buildings.

The battery chargers will each receive 240 VAC, three-phase power from the station service transformers on the 34.5-kV busses. They will supply power to the DC loads while continuously charging the batteries. The 125-VDC systems will be ungrounded and each will include a ground detector to detect ground faults.

3.4.5.4 Uninterruptible Power Supply System

The SCADA, control rooms, and other critical and related technical equipment support areas will be powered from uninterruptible power supply (UPS) systems backed up by diesel-powered standby generating systems to provide reliable, continuous and uninterrupted power to the control rooms. The UPS units will be 120-VAC, solid-state converter/inverter technology with gel-cell batteries that require minimal ventilation for the charging gases.

3.4.5.5 Standby

The diesel-powered standby power generator will be sized to provide continuous power for the UPS system for the Solar Two Project control rooms and other critical process loads through three-pole automatic transfer switches and downstream power distribution equipment. The estimated size of the diesel generator for the Main Services Complex is 250 kW, 480 VAC, three-phase service. Assuming a fuel consumption rate of 19.1 gallons/hour at 100 percent load, a 24-hour run time capability is a 480-gallon belly tank. A monthly 15-minute generator exercise program would consume 57.3 gallons of fuel per year.

3.4.5.6 Electrical Service for Buildings and Auxiliary Structures

Electrical service for the Main Services Complex, the water treatment structure, the water pumping stations, and other auxiliary structures will be provided separately from the Project power generation system and will be provided from the IID electrical distribution lines located north of Evan Hewes Highway by means of overhead service lines to be constructed by IID.

3.5 PROJECT AUXILIARIES

3.5.1 Lighting

Project building lighting will be a minimum 50 foot-candle illumination from combined day lighting and high-intensity discharge, high-efficiency lighting in the assembly and maintenance facility. Day lighting will supplement energy-efficient fluorescent lighting in the operation and administration and water treatment buildings. Emergency egress identification and path lighting will be provided per building code requirements.

Parking and site parking lighting will be designed to minimum traffic flow safety standards for personnel safety. Roadway lighting utilizing luminaries powered by photovoltaic arrays and batteries will be provided at the intersections and corners of internal site maintenance roads to provide minimal safety illumination from sunset to sunrise. Full-cut-off lighting fixtures will be used to control night sky light pollution. Project building exterior and support area lighting design will incorporate minimum personnel safety and security lighting levels while utilizing full-cut-off lighting fixtures to control light pollution. Photometric studies will be completed for the Main Services Complex and a typical roadway intersection. Preliminary photometric studies have been completed and are illustrated for each of these areas on the following figures:

- Figure 3-20, Main Services Complex Lighting Site Plan – Part A,
- Figure 3-21, Main Services Complex Lighting Site Plan – Part B,
- Figure 3-22, Main Services Complex Lighting Site Plan – Part C, and
- Figure 3-23, Typical Roadway Lighting and Photometric Details.

Aviation obstruction lighting will be provided as required by the Federal Aviation Administration (FAA).

Reflective warning signage will be included on perimeter fencing.

3.5.2 Electrical Grounding

The electrical system may experience unit ground potential rise due to ground fault, lightning strike, or switching surges. A grounding system will be installed to permit dissipation of ground fault currents and minimize ground potential rise.

The substation-grounding grid will consist of bare conductors installed below grade in a grid pattern. Each junction of the grid will be bonded together by an exothermic welding process or mechanical connectors.

The grounding grid will be designed with adequate capacity to dissipate heat produced by ground current under the most severe fault conditions. Grid spacing will be designed to maintain safe voltage gradients. Ground resistivity testing and calculations will be performed during detailed design to determine the number and type of grounding electrodes and the grid spacing necessary to ensure safe step and touch potentials under fault conditions.

Each SunCatcher within the solar field will be bonded to the foundation to provide localized grounding of each machine.

Within Project buildings, grounding conductors will bond building structural steel, metallic piping, and non-energized metallic parts of electrical equipment to the building grounding systems. Isolated grounding conductors will connect sensitive control systems to the building grounding systems.

3.5.3 Cathodic and Lightning Protection

The cathodic protection system will be designed and installed to control electrochemical corrosion of exterior surfaces of underground carbon steel, copper, aluminum, and stainless steel. Bottoms of soil- or sand-pad-mounted steel tanks and exterior surfaces of underground ductile or cast-iron pipe will be protected against corrosion. The type of cathodic protection system (galvanic or impressed current) will be based on soil characteristics, the amount of material to be protected, and the interference effects of any nearby cathodic protection systems.

Lightning protection will follow the National Fire Protection Association (NFPA) 780 guidelines and will be provided where required for Project structures and pumps. A lightning protection study will be conducted to determine the specific equipment to protect.

3.5.4 Heating, Ventilation, and Air-Conditioning

Heating, ventilation, and air-conditioning (HVAC) will consist of heat pump rooftop units with code-required fresh make-up air capabilities for the Main Services Complex. Mechanical ventilation with evaporative cooling and/or heat pumps will be utilized for maintenance buildings. Mechanical ventilation will be provided for the assembly buildings. Design will be performed in accordance with the Uniform Building Code (UBC)/International Building Code (IBC), California Energy and Buildings Codes, American Society of Heating, Refrigerating, and Air-Conditioning Engineers, and Sheet Metal and Air-Conditioning Contractors National Association standards and guides, and applicable LORS. These are listed in Appendix F, Mechanical and Fire Protection Engineering Design Criteria.

Temperature control will be provided for both personnel and equipment areas, and humidity control will be provided in the control and communications equipment rooms. Electric and/or propane bottle radiant heaters will be provided at local workstations in the assembly buildings.

3.5.5 Buildings

All buildings will be constructed in accordance with the appropriate edition of the California Building Code (CBC) and other applicable LORS.

The site layout of the Main Services Complex is depicted on Figure 3-24, Main Services Complex Site Plan – Part A, and Figure 3-25, Main Services Complex Site Plan – Part B. The Main Services Complex elevation view is illustrated in Figure 3-26, Main Services Complex Elevation View.

The Main Services Complex will be located within the Project Site in a central location that provides for efficient access routes for maintenance vehicles servicing the SunCatcher solar field. The main control room, SCADA, and UPS will be located at the Main Services Complex.

Warehouse and shop spaces will provide work areas and storage for spare parts for Project maintenance. The Main Services Complex will contain meeting and training rooms, maintenance and engineering offices, and administrative offices.

The Project administration offices and personnel facilities will be located in a one-story operation and administration building. The operation and administration building will measure approximately 200 feet long by 150 feet wide by 14 feet high. This building will also contain meeting and training rooms, engineering offices, a visitor's room, and support services.

The Project maintenance facilities, shop, and warehouse storage will be located adjacent to the operation and administration building. The maintenance building will measure 180 feet wide by 250 feet long by 44 feet in height. This building will contain maintenance shops and offices, PCU rebuild areas, maintenance vehicle servicing bays, chemical storage rooms, the main electrical room, and warehouse storage for maintenance parts to service the SunCatchers.

A water treatment shade structure will be located next to the Main Services Complex and to the northeast side of the Main Services Complex. The water treatment structure will house water treatment equipment and safe storage areas for water treatment chemicals. A motor control center for the water treatment equipment and pumps will be located within this structure. Two wastewater evaporative ponds designed for water treatment wastewater containment will be located just north of the water treatment structure.

A control building will be located near the Project substation. This building will contain relay and control systems for the substation in one room and the Project operations control room in another room or rooms.

A diesel-powered fire water pump and a diesel operated standby power generator will be located adjacent to the operation and administration building on the north side.

Electric service for the Main Services Complex will be obtained from IID. Electric power will be provided via overhead service from an IID overhead distribution line located on the north side of Evan Hewes Highway.

Communications service for the Main Services Complex will be obtained from L3 Communications Holdings, Inc. Communications service will be provided via an overhead service from existing underground communications lines located on the north side of the railroad located south of Evan Hewes Highway. Figure 3-9, Utility Plan – On-Site Utility Service, illustrates the routing of the site electrical, communications and water utilities to service the Main Services Complex. Figure 3-4, Utility Plan – Off-Site Utility Service, illustrates the water service.

The operation and administration building, maintenance building, and Main Services Complex will be painted with a matching desert sand color and will be manufactured buildings.

The water treatment building and the water holding tanks, including the potable water, raw water, and demineralized/fire protection water tanks located at the Main Services Complex will also be painted with a matching desert sand color.

SunCatcher assembly will be performed on-site in temporary structures. These buildings will be decommissioned after all Project SunCatchers are assembled and installed. The assembly buildings are shown on Figure 3-24, Main Services Complex Site Plan – Part A, with an elevation shown on Figure 3-26, Main Services Complex Elevation View. The three assembly buildings will be located beside the Main Services Complex.

Each assembly building will be 170 feet wide by 211 feet long by 78 feet in height and will contain two assembly lines. Each assembly building will be located on a concrete pad for the storage of SunCatcher components and assembled SunCatcher staging before field installation.

The primary purpose of the SunCatcher assembly buildings will be the assembly of the SunCatcher superstructure, the main beam assembly and trusses, the pedestal trunnion, mirrors, wire harnesses, control systems, drive position motors, and the calibration of the mirrors and control systems before field installation. Each assembly bay will be equipped with an automated platform on locating rails to move the SunCatcher through the assembly process.

The exterior material for the assembly buildings will be a fire retardant vinyl fluoride film with ultraviolet blocking characteristics and will be chemical and weather resistant. The exteriors will be painted desert sand to match the other structures.

A concrete pad with the dimensions 50 feet by 510 feet will be located north of the assembly buildings for staging the assembled SunCatchers before field installation.

Transport trailer storage will be located south of the assembly bays. This storage facility will accommodate approximately 75 to 100 trailers, maintaining a supply of 3 to 5 days of inventory of SunCatchers parts during the assembly phase of construction.

These assembly buildings will be decommissioned and salvaged after all SunCatchers for the Project are installed.

3.5.6 Yard Tanks

The Project yard tanks will be at-grade steel tank reservoirs and/or polyethylene tanks. Conceptually, it is envisioned that the water treatment system will consist of a raw water tank with a permanent booster pump station, a potable water treatment system, ground-set steel or polyethylene potable water and a fire water storage tank, a booster pump station to accommodate potable water needs and fire-flow requirements, a disinfection system, a demineralized water treatment system for mirror washing water, a polyethylene storage tank for demineralized water storage, chemical storage, reject water and sludge disposal and evaporation ponds, and various support piping, valves, and miscellaneous equipment to support the system. Conceptual tank sizing for water and other uses is as follows:

- one approximately 175,000-gallon raw water storage tank,
- one approximately 175,000-gallon demineralized water storage tank to contain both fire suppression water and SunCatcher mirror washing water,
- one approximately 17,000-gallon potable water storage tank,

- two approximately 5,000-gallon double-walled fuel storage tanks mounted horizontally within a containment pad , and
- one approximately 10,000-gallon underground septic holding tank for off-site sanitary sewer off-site disposal or a smaller septic tank with dual leach fields.

The steel water storage tanks, if selected, will be vertical, round, field-erected steel tanks with suitable stem wall foundations and interior reinforced-concrete mats with coatings and grounding corrosion control. All tanks, foundations, and piping connections will be designed and constructed to the appropriate standards for contents and seismic zone considerations. Anchor bolts will be used as required.

Chemical storage tanks will be of shop-fabricated, double-walled construction that meets all applicable LORS. These tanks, as well as any portable drums, will be provided with appropriate anchors or cradles and placed within spill containment basins.

3.5.7 Roads

Site access during the construction phase will be provided from Dunaway Road, which has an existing interchange from I-8 at the southeastern corner of the Solar Two Project Site, about 14 miles west of El Centro, California. The site arrangement is illustrated in the following figures:

- Figure 3-1, Solar Two – Site Plan – Phase I – During Construction,
- Figure 3-2, Solar Two – Site Plan – Phase II – During Construction, and
- Figure 3-3, Solar Two – Site Plan – Post Construction.

The figures illustrate a network of four types of roads proposed for servicing the Project:

- paved arterial roadways,
- unpaved solar field access routes,
- unpaved perimeter roadways, and
- paved Main Services Complex roads and parking areas.

Polymeric stabilizers may be used in lieu of traditional road construction materials (e.g., asphalt) for paved roads or to stabilize unpaved roads. The paved arterial roadways may be designed with one 12-foot lane in each direction or as one-way roads with one 12-foot lane, as illustrated on the above-referenced figures and Figure 3-27, Paved Arterial Roads. These paved arterial roads will allow for a looped access to the Main Services Complex, unpaved solar field access routes, access to private properties within the site, and access to the electrical substation. Paving will be placed on arterial roadways to provide for improved solar field access and to minimize fugitive dust generation. The looped roads will provide for redundancy in the event that a road is blocked because of local SunCatcher maintenance, construction traffic, or other local disruption.

Where paved arterial roadways are not located adjacent to the perimeter fence, 15-foot unpaved one-way roads will be provided to allow for patrolling of the site by the security personnel and for maintenance of the perimeter fence. Unpaved perimeter roads will be constructed with polymeric stabilizers or with base material consisting of crushed aggregate over compacted natural ground. Fugitive dust control will be added to the perimeter roadways as needed to minimize dust generation.

The unpaved solar field access routes will be designed for minimum roadway blading to allow for individual SunCatcher access for installation and maintenance. The unpaved solar field access routes will allow for localized access for maintenance service vehicles, and will be constructed per the recommendations of the Soils Engineer based on the expected construction and maintenance traffic loads. To minimize site disturbance, the construction for unpaved north-south access routes will be located along the center of a 112-foot area along every other row of SunCatchers. Between rows, a 72-foot area will be left intact and generally undisturbed except for brush trimming as may be required to reduce fire hazard and shading of SunCatchers. Unpaved east-west access routes will be limited to the alignments, or projection thereof, where electrical cables have been installed in an east-west direction. Temporary site stabilization measures such as metal plates or soil reinforcement mats, and/or polymeric stabilizers may be used to access SunCatchers, if required.

The Main Services Complex parking lot, trailer storage areas, and the roads circling SunCatcher assembly bays will also be paved using asphalt or polymeric stabilizers. Concrete paving may be utilized in loading and storage areas.

3.5.8 Site Security

An on-site security system will be installed as part of the Solar Two Project. Controlled access gates will be maintained at the main construction entrance to the site on Dunaway Road (which will be the alternate entry and exit gate for Project operations) and at the construction egress location to Evan Hewes Highway (which will serve as the main entry and exit gate during Project operations). Twenty-four hour site security monitoring will be provided in the control room via closed-circuit television and intercom system.

Perimeter security fencing and access gates will be provided for the Project Site, including additional fencing and gates around the main buildings, the electrical substation, and construction laydown areas. The security fencing will be provided with warning reflective signage. All site security monitoring will be able to be displayed on a real-time as well as a recorded basis. Security monitoring cameras and active detection systems will be provided for all Project buildings, support areas, and the entire site perimeter. Regular site security vehicular patrols will be conducted to provide additional site security. Site access will be provided to off-site emergency response teams that respond in the event of an “after-hours emergency.” Entry into the Project Site by fire department or emergency units will be handled on a manual override basis by 24-hour security officers stationed at both entrances.

3.5.9 Site Grading and Drainage

The layout for the Solar Two Project Site will be based on avoiding major washes and minimizing surface-disturbing activities. Also, sensitive habitat and cultural resource areas will be avoided wherever possible.

Brush trimming will be conducted between alternating rows as illustrated in Figure 3-17, Solar Two – 18-MW Feeder Group General Arrangement. Brush trimming consists of cutting the top of the existing brush while leaving the existing native plant root system in place to minimize soil erosion.

After brush has been trimmed, blading for roadways and foundations will be conducted between alternating rows, as illustrated on Figure 3-28, 1.5-MW Solar Two Construction Disturbance Plan, to provide access to individual SunCatchers. Blading will consist of limited removal of terrain undulations. Ground disturbance will be minimized wherever possible.

Localized rises or depressions within the individual 1.5-MW solar groups will be removed to provide for proper alignment and operation of the individual SunCatchers.

Paved roadways will be constructed as close to the existing topography as possible, with limited cut-and-fill operations to maintain roadway design slope to within a maximum of 10 percent. (Project Site slope and gradient are shown in Appendix G, Topo Survey Report.)

To minimize shading on SunCatchers and prevent potential brush fire hazards, natural vegetation trimmings will be cleared in the area of each SunCatcher as well as on either side of the paved arterial roadways.

The Site layout will maintain the local pre-development drainage patterns where feasible, and water discharge from the Site will remain at the eastern boundary. The paved roadways will have a low-flow, unpaved swale or roadway dip as needed to convey nuisance runoff to existing drainage channels/swales, as shown on Figure 3-29, Arizona Crossing, and utilize low-flow culverts, as shown on Figure 3-30, Low Flow Culverts. It is expected that storm water runoff will flow over the crown of the paved roadways, which are typically less than 6 inches from swale flow line to crown at centerline of roadway, thus maintaining existing local drainage patterns during storms. Unpaved roads will utilize low-flow culverts, as shown on Figure 3-31, Low Flow Culverts Under Solar Field Access Routes.

Localized channel grading will take place on a limited basis to improve channel hydraulics within the dry washes and to control flow direction where buildings and roadways are proposed. The Main Services Complex will be protected from a 100-year flood by berms or channels that will direct the flow around the perimeter of the building site, if required.

Arizona Crossings (roadway dips) will be placed along the roadways or low-flow culverts consisting of a small-diameter storm drain with a perforated stem pipe, as needed to cross the minor or major channels/swales. These designs will be based on Best Management Practices (BMPs) for erosion and sediment control.

Arizona Crossings (roadway dips) will be used for major washes where the channel cross section exceeds 8 feet in width and 3 feet in depth or exceeds 20 feet in width and 2 feet in depth. The roadway section at the channel flow line will be without a crown. If asphalt is selected as a paving material, roadway protection will be provided by a concrete cut-off wall along the edges of the roadway with un-grouted (loose) riprap upstream and downstream of the concrete cut-off wall. Alternatively, if polymeric stabilizers are selected, no protection measures will be used or protection may be limited to un-grouted (loose) riprap at critical areas.

The proposed east-west on-site paved arterial roadway section between the Main Services Complex and Dunaway Road will be designed as a designated evacuation route. As such, the culverts for this roadway will be designed such that the roadway section shall have its driving surface constructed above the projected profile of a 25-year event.

It is anticipated that roadway maintenance will be required after rainfall events. For minor storm events, it is anticipated that the unpaved roadway sections may need to be bladed to remove soil deposition, along with sediment removal from stem pipe risers at the culvert locations. For major storm events, in addition to the aforementioned maintenance, roadway repairs may be required due to possible damage to pavement where the roadways cross the channels and where the flows exceed the culvert capacity.

Building sites will be developed per county drainage criteria, with provision for soft bottom storm water retention basins. Rainfall from paved areas and building roofs will be collected and directed to the storm water retention basins. Volume on retention or detention basins should have a total volume capacity for a 3-inch minimum precipitation covering the entire site with no C reduction (coefficient of runoff) factors. Volume can be considered by a combination of basin size and additional volume provided within paving and/or landscaping areas.

The retention basin will be designed so that the retained flows will empty within 72 hours after the storm to provide mosquito abatement. This design can be accomplished by draining, evaporation, infiltration, or a combination thereof.

The post-development flow rates released from the Project Site are expected to be less than the pre-development flow rates, thus complying with BMPs. The expected flow reduction is based on the following factors.

- Except for the building sites, the majority of the Project Site will remain 100 percent pervious, as only a negligible portion of the site will be affected by pavement and SunCatchers foundations.
- The increased runoff expected from the building sites will be over-mitigated by capturing 100 percent of the runoff in a retention basin, where the storm runoff will be infiltrated and/or evaporated to the atmosphere.
- The proposed perforated risers to be constructed upstream of the roadway culverts will provide for additional detention.

3.5.10 Raw Water Supply Line

As discussed in Section 3.7.1, Water Supply Source, untreated raw water will be supplied from the IID canal system. Canal water will be conveyed to the raw water storage tank via 7.17 miles of 6-inch underground line located within the Project Site and the Union Pacific Railroad ROW. The on-site portion of the pipeline is illustrated on Figure 3-9, Utility Plan – On-Site Utility Service. The water line design has been based on a varying pipe burial depth. The minimum amount of cover is 60 inches (5 feet) where the water line is affected by a dry wash and 42 inches (3.5 feet) where no drainage effect is anticipated. In addition to the extra cover in dry washes, a 12-inch riprap layer (D50 = 50 pounds) will be placed in the pipe trench 3 feet above

the top of pipe with 12 inches of minimum earthen cover. This will ensure the stability of the washes. All areas disturbed in any manner will be reseeded to prevent erosion using a seed mixture native to the area.

3.6 TRANSMISSION: INTERCONNECTION TO ELECTRIC GRID

This section describes the transmission interconnection between the Solar Two Project and the existing electric grid.

The Solar Two Project will produce a nominal net output of up to 750 MW to supply to the SDG&E high-voltage system at the Imperial Valley Substation, which is located southwest of El Centro, California, and which is the nearest transmission-class substation to the Project.

The Applicant will build a 34.5-kV to 230-kV substation on the Project Site. The Project substation will consist of an open air bus with 15 35-kV collection feeder circuit breakers. Each feeder breaker will be connected to one of the 48-MW or 51-MW overhead collection lines described in Section 3.4.3, Power Process Description. Additional 35-kV circuit breakers will connect to power factor correction capacitor banks located in the substation yard.

For the 300-MW Phase I of the Project, the first interconnection substation will initially consist of two power transformers rated at 120/160/200 mega volt amperes (MVA) each to convert the generation collection voltage from 34.5 kV to the transmission tie voltage of 230 kV. The substation will ultimately contain five 120/160/200-MVA, 34.5-kV to 230-kV step-up power transformers. Each power transformer will serve 3 of the 15 overhead collection lines (one 48-MW line and two 51-MW lines), as illustrated on Figures 3-32 through 3-34.

The power transformers will be protected by 230-kV power circuit breakers. Provisions will be made to expand the substation from 300 to 750 MW with the addition of three power transformers in Phase II of the Project. Figure 3-35, 750-MW Solar Two Substation General Arrangement Plan, illustrates the plan view of the substation. Figure 3-36, 750-MW Solar Two Substation Elevation, Sheet 1, and Figure 3-37, 750-MW Solar Two Substation Elevation, Sheet 2, show elevation views of the substation.

Each transformer will collect 150 MW of generation via three overhead 34.5-kV collection circuits, each protected by a 35-kV power circuit breaker. The 34.5-kV feeders will be terminated on outdoor circuit breakers.

Control, metering, and protection systems for the line, substation, and collection systems will be contained within a control building located adjacent to the substation. The control building will also contain the necessary communications equipment to meet owner, CAISO, and SDG&E requirements.

Additional substation equipment will include a 34.5-kV power-factor correction capacitor control system designed to meet the power factor and zero and low-voltage ride-through requirements of the Interconnect Agreement.

Two 230-kV main circuit breakers will each connect to a 230-kV transmission circuit on a 230-kV double-circuit transmission line to the Imperial Valley Substation.

The transmission line to the Imperial Valley Substation will be an approximately 10.30-mile-long, double-circuit line, as shown on Figures 3-5 through 3-7.

The on-site portion of the interconnection transmission line will be installed in a 100-foot ROW from the Solar Two Project substation east and south to point where the SDG&E Southwest Powerlink transmission line ROW crosses the southern boundary of the Project. A portion of this transmission line will be routed in a surveyed linear ROW located at the north edge of the northeast quarter of Section 19. The on-site portion of the 230-kV interconnect transmission line is illustrated on Figure 3-5, 230-kV Transmission Line, Part A, Phase I, and Figure 3-6, 230-kV Transmission Line, Part A, Phase II. The routing was selected to minimize the distance required and to reduce the undercrossing of the line with assembled SunCatchers.

The off-site portion of the 230-kV interconnect transmission line will be routed in a 100-foot ROW parallel to the existing SDG&E 500-kV Southwest Powerlink transmission line on the southwest side until approximately the third tower from the SDG&E Imperial Valley Substation, where the line will cross under the existing 500-kV transmission line. This route was chosen to minimize effects on the flat-tailed lizard management area south of I-8 by using the existing access roads for the existing transmission line and by placing the disturbance for the interconnect transmission line immediately adjacent to an existing disturbance.

SDG&E has proposed a new 500-kV transmission line from the Imperial Valley Substation. One of the routes being considered for this line also parallels the existing 500-kV line corridor on the north and east of the existing transmission line. This proposed route would require the route for the interconnect transmission line to be on the south and west of the existing corridor. The off-site 230-kV interconnect transmission line is illustrated on Figure 3-7, 230-kV Transmission Line, Part B, and Figure 3-8, 230-kV Transmission Line, Part B, Under Crossing Detail.

The SDG&E Imperial Valley Substation is a 230-kV to 500-kV substation. Generation enters the substation at 230 kV and power leaves the substation at 500 kV. This characteristic determined the selection of 230 kV as the interconnect transmission voltage.

The interconnect transmission line will cross under the existing 500-kV transmission line and the proposed future second 500-kV transmission line (part of the Sunrise Powerlink project) at approximately the third tower from the SDG&E Imperial Valley Substation and will then continue due east and then due south to the point of interconnect. This crossing point is selected to maintain the routing along the existing corridor as long as possible. The transmission circuits are “rolled” between this tower and the SDG&E Imperial Valley Substation, which reduces overhead clearances for the crossing. The crossing could occur between the dead-end tower adjacent to the SDG&E Imperial Valley Substation and the SDG&E Imperial Valley Substation fence; however, a future 230-kV generator interconnect is anticipated by SDG&E from the south. SDG&E has requested that this space for crossing between the dead-end tower and the SDG&E Imperial Valley Substation fence be reserved for this future transmission line.

The transmission line towers will consist of H-Frame towers at the undercrossing of the existing 500-kV transmission line and double-circuit lattice steel towers and/or steel poles elsewhere see (Figure 3-38, Typical H-Frame Transmission Structure, and Figure 3-39, Typical Double-Circuit Transmission Structures).

Both circuits of the overhead 230-kV transmission line will be constructed with one 1,590-kilo circular miles/phase, aluminum steel-reinforced conductor per line, each thermally rated to carry full Project output in emergency conditions and one-half of Project output in normal conditions. Two fiber optic cables are provided for communication with SDG&E and the CAISO.

Each set of overhead 230-kV transmission conductors to the physical connection with the existing Imperial Valley Substation 500-kV transmission line will be supported by a dead-end structure in the Project's substation and 85 to 100 double-circuit lattice steel transmission towers and/or steel poles, as illustrated on Figure 3-39, Typical Double-Circuit Transmission Structures.

An application was filed by the Applicant with SDG&E to perform a System Impact Study for the first 300 MW to be installed in Phase I of the Project. This System Impact Study determined the effect on the Imperial Valley transmission system based on power flows on the existing transmission lines and transformers, short circuit duties of the existing substation facilities, and the electrical stability of the interconnected system considering various contingencies and fault conditions. SDG&E completed the System Impact Study for the first 300 MW for CAISO on 1 September 2006. This study is attached in Appendix H, System Impact Study. The System Impact Study came to the following conclusion:

> "The overall analysis indicates that [the Applicant] does not adversely impact affected systems."

SDG&E completed a facility study for Phase I on 13 June 2007. The facility study outlines mitigation measures for transmission facility overloads and the cost associated with the upgrading of the transmission facilities, should an upgrade be necessary.

A second application was filed with SDG&E for CAISO to perform a System Impact Study for an additional 600 MW to be installed in Phase II of the Project. The Sunrise Powerlink transmission line would provide this additional capacity, provided that the line is approved by the California Public Utilities Commission (CPUC). SDG&E completed this additional study on 19 July 2007. The study confirms that Phase II of the Project is dependent on the development of additional transmission capacity. The second study is attached in Appendix H, System Impact Study. The second System Impact Study concluded the following:

> "The addition of the SES Solar Two … expansion [up to an additional 600 MW]: 1) caused two SDG&E facilities to overload…. …however, if a higher-queue generation project does not materialize these transformers might not overload."

3.6.1 Design, Construction, and Operation of Transmission Facilities

The Solar Two Project will be connected to the power grid through the SDG&E Imperial Valley Substation by a double-circuit, three-phase, 230-kV transmission line. It is expected that SDG&E will complete final design and construction of transmission facilities and reliability upgrades (should they be required).

The Solar Two Project transmission system will require construction of approximately 10.3 miles of double-circuit, 230-kV transmission line. As depicted on Figures 3-5, through Figure 3-8, the Project transmission line extends from the Project Site substation to a point inside the ROW of the SDG&E Imperial Valley Substation. Each circuit of the overhead line begins at a dead-end structure in the Project substation, continues south and east through the Project Site, and transits southeast adjacent to the SDG&E 500-kV Southwest Powerlink transmission line to the Imperial Valley Substation. The transmission line starts within the Project Site boundary but a 7.56-mile-long segment that connects to the Imperial Valley Substation is outside the Project

Site boundary. Construction of the line will include dead-end structures in the substation and 85 to 100 lattice steel towers and/or tubular steel poles with concrete foundations and new 1,590-kilo circular miles aluminum steel-reinforced conductors for each circuit.

The power poles will be spaced approximately 650 feet to 800 feet apart (the final calculation will take into account the grading and other factors to determine the final spacing).

The construction of the Solar Two Project transmission line will involve the facilities listed below.

- **Staging Areas:** These yards are staging areas for trailers, office personnel, equipment, material staging, and employee parking and will be provided in a disturbed area (within a 100-acre laydown area) along the eastern boundary of the Project Site, just east of Dunaway Road.
- **Road Work:** As needed, dirt roads will be cleared for access along the on-site transmission line route to coincide with the southern perimeter road for the Project Site. These roads will provide access to the tower locations. Where the off-site transmission line parallels the existing 500-kV Southwest Powerlink transmission line, the existing access road to the existing transmission line will be utilized. Short access roads will be constructed from the existing access road to each transmission tower along the route. Dirt roads will be cleared for access along the east-west portion of the off-site transmission line from the Southwest Powerlink ROW to the Imperial Valley Substation.
- **Foundations:** Each pole will have a foundation installed that will require curing before the tower or pole installation. These pole foundations will be installed in locations that avoid sensitive environmental resources identified in Project environmental surveys.
- **Tower Erection:** Where used, steel tower structures will be shop-fabricated to the maximum extent possible and erected at the site. The cross arms, insulators, and other hardware will be installed on the towers to the maximum extent possible before erection.
- **Pole Erection:** Where used, each pole will be made up of two sections, which will be assembled on-site and welded together. Afterward, insulators and conductor hardware will be installed.
- **Conductors:** From pulling sites, the conductors will be installed, sagged, and permanently connected to the insulators.
- **Pulling Sites:** Approximately five pulling sites are required to install the conductors along the transmission line. The pulling sites will be located on existing access roads or access roads that will be constructed as part of the transmission line installation.
- **Communication System:** The overhead ground/fiber optic communications optical ground wire cables will be installed using the same pulling sites used for the conductor installation.
- **Cleanup:** Although cleanup will be ongoing as the work proceeds, once construction is completed, a final cleanup of the entire transmission construction site will be performed to clear the area of any remaining construction-related debris.

3.6.2 Transmission Line Safety and Nuisance

This section discusses safety and nuisance issues associated with the proposed electrical interconnection of the Solar Two Project.

3.6.2.1 Transmission Line Description

A double-circuit, 230-kV transmission line will be required to deliver the Solar Two Project electric output to the Western Area Power Administration transmission grid. Each circuit will be sized to carry approximately 60 percent of full Project output under normal conditions and full Project output for 24 hours in emergency conditions in 55 degrees Celsius ambient temperature. Both circuits will terminate at the Project substation. The connection to the grid will be made at the SDG&E Imperial Valley Substation. The double-circuit transmission line will consist of approximately 10.30 miles of new construction. The transmission line is illustrated in the following figures:

- Figure 3-5, 230-kV Transmission Line, Part A, Phase I,
- Figure 3-6, 230-kV Transmission Line, Part A, Phase II, and
- Figure 3-7, 230-kV Transmission Line, Part B.

3.6.2.2 Aviation Safety – Transmission Line

The Code of Federal Regulations Part 77 authorizes the FAA to establish the standard for determining obstruction in navigation space and sets forth requirements for notification of proposed construction. These regulations require notification for any construction that is over 200 feet in height above ground level. Notification is also required if the obstruction is less than specified heights and falls within the restricted airspace in the approach to airports. For airports with runways longer than 3,200 feet, the restricted space extends 20,000 feet (3.2 nautical miles) from the runway. For airports with runways of 3,200 feet or less, the restricted space extends 10,000 feet (1.6 nautical miles) from the runway.

Supporting structures for the proposed 230-kV transmission line will be shorter than 110 feet and will not encroach into restricted space. Therefore, no Notice of Construction or Alteration filing with the FAA is required

3.6.2.3 Electrical Clearances

High-voltage overhead transmission lines are composed of bare conductors connected to supporting structures by means of porcelain, glass, or plastic insulators. The air surrounding the energized conductor acts as the insulating medium. Maintaining sufficient clearances, or air space, around the conductors to protect the public and utility workers is paramount to the safe operation of the line. The safety clearance required around the conductors is determined by normal operating voltages, conductor temperatures, short-term abnormal voltages, avoidance of wind-blown swinging conductors, contamination of the insulators, clearances for workers, and clearances for public safety. Minimum clearances are specified in CPUC General Order 95. In American National Standards Institute Z-133.1-2000, clearances were developed for safe and reliable operation of high-voltage lines. Typically, clearances are specified for the following:

- distances between energized conductors,
- distances between energized conductors and supporting structures,
- distances between energized conductors and other power or communication wires on the same supporting structure, or between other power or communication wires above or below the conductors,
- distances from energized conductors to the ground and other features, such as roadways, railroads, driveways, parking lots, navigable waterways, airports, etc.,
- distances from energized conductors and buildings and signs, and
- distances from energized conductors and other parallel power lines.

Table 3-3, LORS for Electrical Clearances, describes electrical clearances LORS.

Table 3-3
LORS for Electrical Clearances

Laws, Ordinances, Regulations, and Standards	Applicability
GO-128, CPUC, "Rules for Underground Electric Line Construction"	Covers required clearances, grounding techniques, maintenance, and inspection requirements.
Title 8 CCR Section 2700 *et seq.* "High Voltage Electric Safety Orders''	Establishes essential requirements and minimum standards for installation, operation, and maintenance of electrical installation and equipment to provide practical safety and freedom from danger.
GO-52, CPUC, "Construction and Operation of Power and Communication Lines"	Applies to the design of facilities to provide or mitigate inductive interference.
ANSI/IEEE 593, "IEEE Recommended Practices for Seismic Design of Substations"	Recommends design and construction practices.
IEEE 1119, "IEEE Guide for Fence Safety Clearances in Electric - Supply Stations"	Recommends clearance practices to protect persons.
IEEE 998, "Direct Lightning Stroke Shielding of Substations"	Recommends protections for electric system from direct lightning strikes.
IEEE 980, "Containment of Oil Spills for Substations"	Recommends preventions for release of fluids into eco-system.

Source: SES Solar Two, LLC, 2008.
Notes:
ANSI = American National Standards Institute
CCR = California Code of Regulations
CPUC = California Public Utilities Commission
GO = General Order
IEEE = Institute of Electrical and Electronics Engineers, Inc.

3.6.2.4 Noise and Radio Frequency

An electric field is generated in the air surrounding a transmission line conductor when the transmission line is in operation. A corona discharge occurs at the conductor surface when the intensity of the electric field at the conductor surface exceeds the breakdown strength of the surrounding air. The electrical energy released from the conductors during this process is known as corona loss and is manifested as audible noise and radio or television interference.

Energized electric transmission lines can generate audible noise from corona discharge, most often perceived as a buzz or hum. This condition is usually worse when the conductors are wet. The Electric Power Research Institute has conducted several transmission line tests and studies that measure sound levels for several power line sizes with wet conductors (EPRI 1975, 1982). The "Transmission Line Reference Book, 345 kV and Above" also notes that the noise produced by a conductor attenuates (decreases) by 2 to 3 decibels for each doubling of the distance from the source.

Radio and television interference, known as gap-type noise, is caused by a film on the surface of two hardware pieces that are in contact. The film acts as an insulator between the surfaces. This insulator results in small electric arcs that produce noise and interference. This type of noise is not a problem in well-maintained transmission lines. Well-trained transmission line maintenance crews will maintain the Project transmission line. Therefore, any problems that might occur can be readily pinpointed and corrected. Further, the distance to the nearest residential development makes it unlikely that the Project transmission line would have any effect on radio or television reception.

Many factors contribute to the pre-project ambient noise levels in the area of the Project Site. The Project transmission line will be designed such that noise from the transmission line will continue to be well below undesirable levels. Any noise or radio/television interference complaints will be logged, investigated, and, to the degree possible, mitigated.

3.6.2.5 Induced Currents and Hazardous/Nuisance Shocks

Introduction

Touching underground metallic objects near a transmission line can cause hazardous or nuisance shocks if the line is not properly constructed. Since the electric fields of the transmission line will be negligible aboveground, and the line will be built in conformance with California Public Utilities Commission General Order 95 requirements and the California Code of Regulations (CCR), Title 8, Section 2700 requirements, hazardous shocks are highly unlikely to occur as a result of the Project construction and operation.

Electric and Magnetic Fields

Electric and magnetic fields (EMFs) occur independently of one another at the 60 Hz frequency used in transmission lines, and both are created by electric charges. Electric fields exist when these charges are not moving. Magnetic fields are created when these same electric charges are moving. The magnitude of both electric and magnetic fields from three-phase transmission lines falls off rapidly as the distance from the source increases (proportional to the inverse of the square of the distance). For the Solar Two Project double-circuit transmission line, the EMF levels are minimized by the phase-reversing configuration of the double-circuit line.

Transmission lines, distribution lines, house wiring, and appliances generate electric fields in their vicinity because of unbalanced electrical charge on unshielded energized conductors. Electric fields are expressed in volts per meter or kilovolts (thousands of volts) per meter (kV/m).

Once electric currents are in motion, they create magnetic fields. The strength of the magnetic field is proportional to the magnitude of the current in the circuit. Magnetic fields can be characterized by the force they exert on a moving charge or on an electrical current. A magnetic field is a vector quantity that is characterized by both magnitude and direction. Electric currents are sources of magnetic fields. Magnetic fields are measured in milligauss.

At the ground under a transmission line, the electric field is nearly constant in magnitude and direction over distances of a few meters. However, in close proximity to the transmission or distribution line conductors, the field decreases rapidly as distance from the conductor increases. Similarly, near small sources, such as appliances, the field is not uniform and falls off even more rapidly with distance from the device. If an energized conductor is inside a grounded conducting enclosure, then the electric field outside the enclosure is zero and the source is said to be shielded.

In January 1991, the CPUC issued an Order Instituting Investigation (I.91-01-012 [CPUC 1991]) into the potential health effects from electric and magnetic fields emitted by electric power and cellular telephone facilities. In September 1991, the assigned CPUC administrative law judge issued a ruling that created the "California EMF Consensus Group." This group of representatives from utilities, industry, government, private and public research, and labor organizations submitted a document entitled "Issues and Recommendations for Interim Response and Policy Regarding Power Frequency EMFs" on 20 March 1992 (California EMF Consensus Group 1992). Regarding the relevant policy consensus recommendation titled "Facility Siting," the group stated that the CPUC should recommend that utilities take public concern about electromagnetic fields into account when siting new electric facilities. Although this group could not conclude that there is a relationship between EMFs and human health effects, they also could not conclude that this relationship does not exist; therefore, they recommended that the CPUC authorize further research.

California does not presently have a regulatory level for magnetic fields. However, the values estimated for the Project are well below those established by states that do have limits. Other states have established regulations for magnetic field strengths that have limits ranging from 150 milligauss to 250 milligauss at the edge of the ROW, depending on voltage. The California Energy Commission (CEC) does not presently specify limits on magnetic fields for 230-kV transmission lines.

Electric Fields: Project Effects

The line voltage and the distance of conductors from the point of measurement largely determine the electric fields of the Project. Conducting objects such as vegetation, the earth, or buildings perturb or distort the field. These can in some cases act as shields, which significantly reduce electric field levels. Increasing the distance from the conductors of the transmission line to potential receptors is the most effective way to reduce electric field effects in overhead transmission lines.

The electric field strengths from the proposed transmission line are calculated to be insignificant. Although California does not have any regulatory level for electric fields, it is anticipated that the Solar Two Project electric field strengths will be well below levels established by those states that do have regulatory limits. States with regulations have ranges from 1.0 kV/m to 2.0 kV/m at the edge of the ROW to 11 kV/m within the ROW, depending on the line voltage. The CEC does not presently specify limits on electric fields for 230-kV transmission lines.

Electric field strengths have been calculated for the Solar Two Project and the results are shown in Appendix I, Electric and Magnetic Field Calculations.

Magnetic Fields: Project Effects

Unlike the electric fields, magnetic fields are not necessarily perturbed or shielded by most common objects. Effective ways to reduce magnetic field strengths in overhead transmission lines include increasing the distance from the conductors of the transmission line to potential receptors and arranging phases to increase cancellation of fields. The higher the overhead transmission lines are above ground level, the lower the magnetic field strength is at ground level. The conductor phases of the proposed double-circuit transmission line will be configured so that currents among the conductors will have a canceling effect on the total magnetic field produced by the circuits.

Magnetic field strengths have been calculated for the Solar Two Project. The results are shown in Appendix I, Electric and Magnetic Field Calculations.

3.7 WATER SUPPLY AND TREATMENT

The following types of water will be required for the Project:

- equipment washing water,
- potable water,
- dust control water, and
- fire protection water.

When completed, the Solar Two Project will require a total of approximately 32.7 acre-feet of raw water per year. SunCatcher mirror washing and operations dust control under regular maintenance routines will require an average of approximately 23.3 gallons of raw water per minute, with a daily maximum requirement of approximately 39.2 gallons of raw water per minute during the summer peak months each year, when each SunCatcher receives a single mechanical wash.

The Solar Two Project water supply requirements are tabulated in Table 3-4, Water Usage Rates for Solar Two Project Operations. The table provides both the expected maximum water usage rates and the annual average usage rates. The water balance for the Solar Two Project is illustrated in Appendix J, Water Balance Flow Diagrams.

Table 3-4
Water Usage Rates for Solar Two Project Operations

Water Use	Daily Average (gallons per minute)	Daily Maximum (gallons per minute)	Annual Usage (acre-feet)
Equipment Water Requirements			
SunCatcher mirror washing	10.4[1]	17.4[2]	14.2[3]
Water Treatment System Discharge			
Brine to evaporation ponds	5.5	10.2[4]	7.5
Potable Water Use			
For drinking and sanitary water requirements	3.9[5]	4.7[6]	5.4[7]
Dust Control			
Raw water for dust control during operations	3.5[8]	6.9[9]	5.6[10]
Totals	**23.3**	**39.2**	**32.7**

Source: SES Solar Two, LLC, 2008.
Notes:
[1]Based on 30,000 SunCatchers requiring a monthly wash with an average of 14 gallons of demineralized water per spray wash and a five-day work week (21 work days per month).
[2]During a 3 month period, all SunCatcher mirrors are given a scrub wash requiring up to three times the normal wash of 14 gallons per SunCatcher. Therefore, the Daily Maximum usage rate is based on two-thirds of the SunCatchers receiving a normal wash and one-third receiving a scrub wash.
[3]Based on every SunCatcher having approximately 8 normal washes per year with one additional scrub wash.
[4]Based on the maximum amount of demineralized water required for mirror washing and assumes a decrease in raw water quality requiring an additional 20 percent of system discharge.
[5]Assumes 30 gallons per person per day for 188 people.
[6]Maximum amount assumes a 20 percent contingency over the Daily Average.
[7]Assumes a six-day work week and average daily usage.
[8]Assumes 5,000 gallons per day.
[9]Assumes up to 10,000 gallons per day.
[10]Assumes daily average dust control operations.

3.7.1 Water Supply Source

The following water service providers were considered for the Solar Two Project:

- IID,
- Ocotillo Mutual Water Company, and
- Coyote Valley Mutual Water Company.

The water sources in the local area include the underground aquifer water and surface water from the IID Westside Main Canal. Water production from the aquifer and obtaining water from the IID Westside Main Canal will both require coordination and approval from IID. Water studies show that the aquifer is significantly overdrafted and that new well permits are not being granted. Therefore, the water supply source has been narrowed to the IID Westside Main Canal. Discussions with IID have been positive, with IID expressing a willingness to supply water to the Project Site. Portions of the site are within IID's service area. IID has indicated that the portions of the site that are not within its service area must be annexed by IID. Discussions are continuing with IID to obtain a "will serve" agreement, and to annex the entire site into IID's service area.

Water from the IID Westside Main Canal can be conveyed to the site via a new pump station and water supply pipeline from the canal along the Union Pacific Railroad ROW or the BLM ROW.

The water from IID Westside Main Canal is characterized as raw water and will require treatment to remove dissolved solids for SunCatcher mirror wash water applications and additional treatment to meet standard drinking water quality requirements.

3.7.2 Water Quality

Table 3-5, Raw Water Quality Analysis, summarizes the IID Westside Main Canal water quality report by IID dated 23 October 2005.

Table 3-5
Raw Water Quality Analysis

Characteristics	Units	Value
General		
Turbidity	NTU	0.1
Conductance	micromhos/cm	10
Total Dissolved Solids	ppm	810
Total Hardness	ppm	360
Total Alkalinity	mg/l $CaCO_3$	160
Cations		
Calcium	mg/l	91
Magnesium	mg/l	33
Sodium	mg/l	120
Potassium	mg/l	4.7
Anions		
Bicarbonate	mg/l	190
Sulfate	ppm	330
Chloride	ppm	120
Fluoride	ppm	0.29
Trace Elements		
Arsenic	microg/l	2.4
Beryllium	microg/l	ND
Cadmium	microg/l	ND
Cobalt	microg/l	NT
Chromium	microg/l	ND
Copper	microg/l	ND
Iron	microg/l	510
Lithium	microg/l	NT
Manganese	microg/l	33
Nickel	microg/l	ND
Lead	microg/l	ND
Selenium	microg/l	ND
Silver	microg/l	ND

Table 3-5
Raw Water Quality Analysis

Characteristics	Units	Value
Zinc	microg/l	ND
Organics		
Total Trihalomethanes	ppb	NT

Source: IID, 2005.
Notes:
$CaCO_3$ = calcium carbonate
ND = not detected
NT = not tested
NTU = Nephelometric Turbidity Units
mg/l = milligram per liter
microg/l = microgram per liter
ppm = parts per million
ppb = parts per billion

3.7.3 Water Treatment Requirements

Water for Solar Two Project SunCatcher mirror washing, fire water, and domestic use will be provided from IID via the Westside Main Canal. SunCatcher mirror washing requires the water to be demineralized to prevent mineral deposits forming on the SunCatcher mirrors. Processes available for demineralization are reverse osmosis (RO) and ion exchange. RO with a de-silting pretreatment application is the preferred process. Ion exchange requires the use of hazardous chemicals, including sulfuric acid and caustic soda. Downtime for scheduled maintenance and media regeneration are significantly longer using the ion exchange process than for an RO system. RO provides additional operational and cost benefits as well.

The treatment requirements and the process units required to prepare the water to a level of quality that will be suitable for potable and fire water needs will be further evaluated during final Project engineering. This engineering will include an evaluation of the treatment equipment and processes available to provide the required process water at the flow and quality needed for mirror washing. This equipment evaluation will include demineralizer systems and a look at alternate treatment methods.

Water for domestic use will meet Environmental Protection Agency (EPA) standards. Disinfection will be required as an additional treatment process to produce water that meets drinking water standards. This water will be stored in a separate potable water storage tank.

3.7.4 Water Treatment Systems

The Solar Two Project will require treated water that will be used primarily for the washing of mirrors (demineralized process water), fire protection, and potable culinary uses. Water will be piped to the on-site water treatment facility, where it will be treated to a level that facilitates its use for these purposes and stored in at-grade steel tank reservoirs and/or polyethylene tanks. Using a value engineering method, further evaluation will be performed for the various options that may be available to treat, store, and distribute the water as needed. It is envisioned that the water treatment system will consist of a raw water tank with a permanent booster pump station, a potable water treatment system, a ground-set steel potable water and fire water storage tank,

booster pump station to accommodate potable water needs and fire flow requirements, a disinfection system, a demineralized water treatment system for mirror washing water, a polyethylene storage tank for demineralized water storage, chemical storage, reject water and sludge disposal and evaporation ponds, and various piping, valves, and miscellaneous equipment to support the system.

The water treatment facility will be protected by a shade structure constructed as part of the Main Services Complex. The shade structure will cover equipment for processing and treating water required for fire protection, SunCatcher mirror washing, and potable water uses. The water treatment building will contain the water treatment system, an analytical laboratory area, a separate bulk chemical storage area for the water treatment process, and a separate electrical Motor Control Center area.

The water treatment structure will measure approximately 40 feet long by 40 feet wide by 14 feet in height; the structure will be constructed with a metal roof. All equipment will be floor mounted and raised slightly above the finished floor on housekeeping pads. Curbs will be installed for spill containment where needed. Corrosion-resistant coatings will be applied, as necessary, on floors and structural members.

3.7.5 SunCatcher Mirror Washing

Water from the Westside Main Canal is expected to have approximately 810 milligrams per liter (mg/L) of total dissolved solids (TDS). The water treatment process will be a RO membrane-based system that will produce demineralized water with a TDS of less than 20 mg/L. The daily average water requirement for SunCatcher mirror washing under regular maintenance routines will be approximately 10.4 gallons of raw water per minute.

3.7.6 Fire Protection Water

The Main Services Complex will include a location for an approximately 175,000-gallon tank that will be used to store water for SunCatcher mirror washing and fire protection applications. This volume of water will meet all LORS, including the El Centro Fire Department Prevention Division requirements for fire water.

3.7.7 Dust Control Water

Primary fugitive dust suppression during construction will use raw water from the IID Westside Main Canal. The raw water will be conveyed to the Main Services Complex via a 6-inch-diameter water line.

Initially, raw water will be used in the areas disturbed by construction during the construction activity for the primary access routes, the construction laydown areas, the grading of the sites for the Main Services Complex and the Satellite Services Complex, and the substation sites, as well as the clearing areas disturbed by the construction of each 18-MW or 24-MW solar group. The 18-MW solar group clearing areas are illustrated on Figure 3-13, Solar Two 18-MW Solar Group Plan.

Water trucks will be used throughout the duration of the construction phase for the Solar Two Project. Based on the construction schedule, the Annual average water flow rate during construction is approximately 26,000 gallons per day for construction water and 11,500 gallons per day for dust control. However, the peak water flow rate is approximately 353,000 gallons per day for construction water and 223,000 gallons per day for dust control. These rates are illustrated in Table 3-6, Construction and Dust Control Water Truck Quantities by Month.

3.7.8 Portable Water

In 1971, laws and regulations governing the certification of potable water treatment facility operation were enacted. These laws and regulations establish the level at which water treatment facilities should be manned; the minimum qualifications for testing at each of the five grade levels, and the criteria for renewal and revocation of certificates. Finished water from the demineralization process will be treated for potable and sanitary uses. The potable water will be stored in a designated storage facility equipped with chemical dosage for disinfection. The potable water will meet all EPA potable water quality standards.

3.8 WASTEWATER AND WASTE MANAGEMENT

The water treatment wastewater generated by the RO unit contains relatively high concentrations of TDS. Wastewater or brine generated by the RO unit will be discharged to a concrete-lined evaporation pond, or equivalent. Each pond will be sized to contain 1 year of discharge flow, approximately 2.44 million gallons. A minimum of 1 year is required for the water treatment waste to undergo the evaporation process. The second pond will be in operation while the first is undergoing evaporation. The two ponds will alternate their functions on an annual basis. The solids will be scheduled for removal during the summer months, when the concentration of solids is at its greatest due to an increase in evaporation rates, in order to achieve maximum solids removal.

The brine constituents include those from the raw water source as shown in the Table 3-5, Raw Water Quality Analysis, with concentrations of up to four to five times those of the raw water source. The TDS concentration anticipated in the brine when treating to less than 20 mg/L of TDS is approximately 3,600 mg/L based on the source TDS level of 810 mg/L.

After the brine has gone through the evaporation process, the solids that settle at the bottom of the evaporation pond will be tested by the Applicant and disposed of in an appropriate non-hazardous waste disposal facility.

3.8.1 Sanitary Wastewater System

Wastewater generated at the Main Services Complex will be discharged into a septic system with sanitary leach fields, and will be designed in accordance with applicable LORS, including those of the county, the Regional Water Quality Control Board, and the California Department of Health Services. The septic tank will be located at the Main Services Complex; the leach fields will be located adjacent to the Main Services Complex, utilizing the open space between nearby SunCatchers.

Table 3-6
Construction and Dust Control Water Truck Quantities by Month

	Number of Trucks per Month									
Month after Construction Start	**1**	**2**	**3**	**4**	**5**	**6**	**7**	**8**	**9**	**10**
Construction Water Truck	3	19	19	2	2	4	5	5	4	2
Dust Control Water Truck	2	13	12	8	8	9	7	3	3	3
Water Truck Usage by 1,000 Gallons										
Construction Water Truck	1,559.88	9,879.24	9,879.24	1,039.92	1,039.92	2,079.84	2,599.8	2,599.8	2,079.84	1,039.92
Dust Control Water Truck	1,039.92	6,759.48	6,239.52	4,159.68	4,159.68	4,679.64	3,639.72	1,559.88	1,559.88	1,559.88
	Number of Trucks per Month									
Month after Construction Start	**11**	**12**	**13**	**14**	**15**	**16**	**17**	**18**	**19**	**20**
Construction Water Truck	2	2	2	17	11	0	0	0	0	0
Dust Control Water Truck	3	3	9	12	9	9	9	8	8	4
Water Truck Usage by 1,000 Gallons										
Construction Water Truck	1,039.92	1,039.92	1,039.92	8,839.32	5,719.56	0	0	0	0	0
Dust Control Water Truck	1,559.88	1,559.88	4,679.64	6,239.52	4,679.64	4,679.64	4,679.64	4,159.68	4,159.68	2,079.84
	Number of Trucks per Month									
Month after Construction Start	**21**	**22**	**23**	**24**	**25**	**26**	**27**	**28**	**29**	**30**
Construction Water Truck	0	0	0	0	0	0	0	0	0	0
Dust Control Water Truck	4	3	3	3	3	3	3	1	1	1
Water Truck Usage by 1,000 Gallons										
Construction Water Truck	0	0	0	0	0	0	0	0	0	0
Dust Control Water Truck	2,079.84	1,559.88	1,559.88	1,559.88	1,559.88	1,559.88	1,559.88	519.96	519.96	519.96
	Number of Trucks per Month									
Month after Construction Start	**31**	**32**	**33**	**34**	**35**	**36**	**37**	**38**	**39**	**40**
Construction Water Truck	0	0	0	0	0	0	0	0	0	0
Dust Control Water Truck	1	1	1	1	1	1	1	1	1	0
Water Truck Usage by 1,000 Gallons										
Construction Water Truck	0	0	0	0	0	0	0	0	0	0
Dust Control Water Truck	519.96	519.96	519.96	519.96	519.96	519.96	519.96	519.96	519.96	0

Source: SES Solar Two, LLC, 2008.

The leach field system will consist of two independent leach fields, each sized to dispose of 100 percent of clear liquid from the sanitary sewer. The installation of two independent leach trenches will allow for a redundant system that could be used by cycling the flows (through valving for clear liquid disposal) in one leach field at a time. This design would minimize the possibility of a long-term leach field failure. A healthy leach field gets a regular flow of bacteria from the fluids exiting the septic tank. These bacteria create organic slimes in the soil, which clog the soil pores and cut down enormously on the absorption capacity of the soils. With parallel leach trenches, one trench of the leach system would be used for a period of 2 years and then the valve would be closed. The valve to the second leach field would then be opened so that this field would serve as the leach field for the next 2 years. The original field, having been closed down, would lie fallow and recover from the bacterial loading it had received. This drying out by switching field every 2 years could enable the leach fields to last indefinitely. Therefore, disposal of clear liquids will be conveyed to on-site sanitary leach fields, and sewer sludge will be pumped and disposed of by trucks to an approved off-site disposal facility.

3.8.2 Water Treatment System Solid Wastes

Solid waste from the Solar Two Project water treatment system will be trucked off-site from the evaporation ponds as a low-moisture cake. An estimated 60,000 pounds per year of salt cake will be trucked off-site to an appropriate landfill or recycled. The waste will be non-hazardous, as shown in Table 3-7, List of Inorganic Persistent and Bioaccumulative Toxic Substances, Their Soluble Threshold Limit Concentration, and Total Threshold Limit Concentration Value, and Table 3-8, Maximum Concentration of Contaminants for the Toxicity Characteristic in Non-Solid Waste. The full 60,000 pounds will be scheduled for removal at the end of the evaporation process. The type of vehicle proposed for use in hauling the solids off-site has a capacity of 20 tons. Therefore, approximately one-and-a-half (1.5) loads will be required per year.

Table 3-7
List of Inorganic Persistent and Bioaccumulative Toxic Substances, Their Soluble Threshold Limit Concentration, and Total Threshold Limit Concentration Value

Substance	STLC[2] Wet-weight (mg/L)	TTLC (mg/kg)	Estimated Maximum Concentration in Solid Product, Dry Basis[3] (mg/kg)
Arsenic and/or arsenic compounds	5	500	2.74
Chromium and/or chromium compounds	5	2,500	ND[1]
Copper and/or copper compounds	25	2,500	ND[1]
Lead and/or lead compounds	5	1,000	ND[1]
Selenium and/or selenium compounds	1	100	ND[1]
Zinc and/or zinc compounds	250	5,000	ND[1]

Source: Title 22 CCR Section 6626124.
Notes:
[1]Not detected in source stream.
mg/kg = milligrams per kilogram
mg/L = milligrams per liter
STLC = soluble threshold limit concentration
TTLC = total threshold limit concentration

Table 3-8
Maximum Concentration of Contaminants
for the Toxicity Characteristic in Non-Solid Waste

EPA Hazardous Waste Number	Contaminant	Chemical Abstract Service Number	Regulatory Level (mg/L)	Maximum Concentration in Brine (mg/L)
D004	Arsenic	7440-38-2	5.0	0.0098
D007	Chromium	7440-47-3	5.0	ND[1]
D010	Selenium	778-49-2	1.0	ND[1]

Source: Title 22 CCR Section 66261.24.
Notes:
[1] Not detected in source stream.
EPA = United States Environmental Protection Agency
mg/L = milligrams per liter

Currently, an active landfill, the Calexico Solid Waste Site, is located approximately 30 miles from the Solar Two Project Site, in the City of Calexico at New River and Highway 98. The main roadways for travel to the landfill are I-8, CA-111, and CA-98. The landfill is currently permitted to January 2022. The landfill accepts a maximum of 150 tons per day.

An alternative landfill location for future use will be the Mesquite Regional Landfill. This facility is currently going through the permitting process. The Mesquite Regional Landfill will be located in Brawley, approximately 45 miles from the Solar Two Project Site, at 6502 East Highway 78. The main roadways for travel to the landfill are I-8, CA-111, and CA-78.

3.8.3 Waste Management

The Solar Two Project will generate a variety of non-hazardous and hazardous wastes during construction and operation. These solid wastes are outlined in Table 3-9, Summary of Construction Waste Streams and Management Methods, and Table 3-10, Summary of Operation Waste Streams and Management Methods.

These wastes include liquids and solids from the wastewater system, replaceable parts, rags, and other waste materials and chemicals produced from maintenance activities, including equipment and vehicle maintenance.

The handling and disposal of hazardous wastes is discussed in Section 3.8.3, Waste Management.

Table 3-9
Summary of Construction Waste Streams and Management Methods

Waste Stream and Classification	Origin and Composition	Estimated Amount	Estimated Frequency of Generation	On-Site Treatment	Waste Management Method
Construction waste – non-hazardous recyclable	Scrap wood, steel, glass, plastic, and paper	80 cubic yards per week	Intermittent	Segregation into composition type; store for less than 30 days	Recycling facility
Construction waste – hazardous	Empty hazardous material containers	2 cubic yards per week	Intermittent	Store for less than 90 days	Return to vendor or to hazardous waste disposal facility
Construction waste – hazardous	Solvents, used oils, paint, oily rags, cleaners, and adhesives	200 gallons	Every 90 days	Store for less than 90 days	Dispose to hazardous waste disposal facility or recycle
Construction vehicles – hazardous	Waste oil including used motor oil, transmission fluid, hydraulic fluid, and antifreeze	200 gallons	Every 90 days	Store for less than 90 days	Dispose to hazardous waste disposal facility or recycle
Spent batteries – hazardous	Lead acid and alkaline	40 per year	Intermittent	Store for less than 90 days	Dispose to recycling facility
Storm water from construction – non-hazardous	Surface runoff (water, inert material, dirt and concrete particles)	15 gallons per day	Intermittent	None	Water will percolate into on-site soils
Residual solids from retention pond – non-hazardous	Dirt and concrete particles	50 cubic yards one time at end of construction	5 x 10 cubic yards Truck	None	Excavate at end of construction and spread on-site
Sanitary waste – non-hazardous	Portable chemical toilets sanitary waste	400 United States gallons per day	Periodically pumped to tanker truck by licensed contractor	None	Ship to sanitary water treatment plant

Source: SES Solar Two, LLC, 2008.

Table 3-10
Summary of Operation Waste Streams and Management Methods

Waste Stream and Classification	Origin and Composition	Estimated Amount	Estimated Frequency of Generation	On-Site Treatment	Waste Management Method
Office and packaging materials from supplies deliveries – non-hazardous	Paper, wood, plastic, and cardboard	10 cubic yards per week	Intermittent	Segregation into composition type; store for less than 30 days	Weekly collection for recycling and/or approved waste disposal
Sanitary wastewater solids – non-hazardous	Rest rooms and sanitary waste	5,000 gallons per month	Intermittent	None	Dispose to sanitary leach field
Spent batteries – hazardous, recyclable	Lead acid, alkaline, gel cell, nickel, and cadmium	30 units per week	Intermittent	Store for less than 30 days	Dispose to authorized waste recycling facility

Table 3-10
Summary of Operation Waste Streams and Management Methods

Waste Stream and Classification	Origin and Composition	Estimated Amount	Estimated Frequency of Generation	On-Site Treatment	Waste Management Method
PCU oil[1] – motor oil – hazardous, recyclable	PCU overhaul	18 gallons per month	Intermittent	Two 100 United States gallon tanks for filtering and re-use in PCU	Recycle
PCU coolant – ethylene glycol – hazardous	PCU overhaul	18 gallons per month	Intermittent	Store for less than 90 days	Dispose to authorized waste disposal facility
PCU hydrogen gas – non-hazardous, recyclable	Refill k-bottles in place	5,000 k-bottles per month	2 times per year per SunCatcher	Refill k-bottles on-site	Empty k-bottles returned through supplier
Oily absorbent and spent oil filters – hazardous, recyclable	PCU and hydraulic equipment overhauls	One 55-gallon drum per month	Intermittent	Store for less than 90 days	Dispose to authorized recycle facility
Oily rags – non-hazardous	PCU and hydraulic equipment overhauls	One 55-gallon drum per month	Intermittent	Store for less than 90 days	Launder at authorized recycle facility
Used hydraulic fluid, oils and grease – hazardous, recyclable	PCU and hydraulic equipment overhauls	Less than 11 gallons per month	Intermittent	Store for less than 90 days	Dispose to authorized recycle facility
De-mineralized water treatment wastewater salt cake – non-hazardous or designated waste	Zero discharge system; naturally occurring salt compounds	60,000 pounds per year	Intermittent	Evaporative pond containment	Non-hazardous waste disposal facility

Source: SES Solar Two, LLC, 2008.
Notes:
[1]Assumption is based on 5,300 United States gallons per year for Power Conversion Unit oil changes at a 98 percent recovery rate.
PCU = Power Conversion Unit

3.8.3.1 Solid Waste – Non-Hazardous

Construction Wastes

Inert solid wastes resulting from construction activities may include recyclable items such as paper, cardboard, solid concrete and block, metals, wire, glass, Type 1 to 4 plastics, drywall, wood, and lubricating oils. Non-recyclable items include insulation, other plastics, food waste, roofing materials, vinyl flooring and base, carpeting, paint containers, packing materials, and other construction wastes. Management of these wastes will be the responsibility of the construction contractor(s). Typical management practices required for contractor waste include recycling when possible, proper storage of waste and debris to prevent wind dispersion, and weekly pickup of wastes with disposal at a local approved landfill.

It is expected that a 40-cubic-yard container will need to be emptied on a weekly basis during the construction of the buildings and once a month thereafter. Recyclable materials will be separated into labeled bins and removed from the site as needed. This construction waste is not expected to have a significant effect on public health or cause adverse effects on local landfill capacity. Table 3-9, Summary of Construction Waste Streams and Management Methods, provides an overview of the waste streams anticipated for the construction phase of the Project.

Any wastes classified as hazardous, such as solvents, degreasing agents, concrete curing compounds, paints, adhesives, chemicals, or chemical containers, will be stored and disposed of as required by local and state regulations. Material quantities of hazardous wastes are not expected. Lubricating oils generated from the construction vehicles will be recycled at local approved recycling facilities.

Operation Wastes

Inert solid wastes generated at the Project during operation will be predominantly office wastes and routine maintenance wastes, such as scrap metal, wood, and plastic from surplus and deactivated equipment and parts. Scrap materials such as paper, packing materials, glass, metals, and plastics will be segregated and managed for recycling. Non-recyclable inert wastes will be stored in covered trash bins in accordance with local ordinances and picked up by an authorized local trash hauler on a regular basis for transport and disposal in a suitable landfill area. Table 3-10, Summary of Operation Waste Streams and Management Methods, provides an overview of the waste streams anticipated for the operation.

3.8.3.2 Non-Hazardous Liquid Waste

Non-hazardous liquid wastes produced for the Project consist of water treatment system wastes. Handling and disposal of these wastes are discussed in Section 3.4.5.2, Electrical Collection System.

Skim oil collected from oil/water interceptor and other liquids from equipment maintenance will be transported by an authorized carrier to a certified recycling facility.

3.8.3.3 Hazardous Waste

Solar Two will implement a Hazardous Materials Management Program (HMMP) developed for the Project construction and operation phases. At a minimum, the HMMP will include procedures for:

- hazardous materials handling, use and storage,
- emergency response,
- spill control and prevention,
- employee training, and
- recordkeeping and reporting.

The HMMP will be developed and implemented before the start of construction. The program will be revised and updated as required in a timely manner, and employees will be trained and the program will be implemented before the start of commercial operation. The procedures outlined in the HMMP will be in accordance with all applicable LORS.

3.8.4 Management and Disposal of Hazardous Materials

3.8.4.1 Chemical Management

Table 3-11, Summary of Water Treatment Materials Usage and Storage, and Table 3-12, Summary of Non-Water Treatment Materials Usage and Storage, list the chemicals to be used, handled, and stored at the Project Site during Project operation.

Table 3-11
Summary of Water Treatment Materials Usage and Storage

Chemical	Application	Expected Storage Quantity (gallons – average)
Sodium hypochlorite 12.5 percent solution (bleach)	Disinfectant for potable water	4

Source: SES Solar Two, LLC, 2008.
Note: This table also appears in Appendix L, Hazardous Materials Handling.

Table 3-12
Summary of Non-Water Treatment Materials Usage and Storage

Chemical	Application	Storage Location	Storage or Usage Quantity	
			Average	Maximum
Insulating oil (heat transfer)	Electric equipment	N/A	50,000 gallons, initial fill	Not stored on-site, initial fill quantity is brought to site at the time of replacement
Lubricating oil	Solar Stirling Engine/dish drives	Maintenance buildings	108,333 gallons, initial fill with usage of 46 gallons per month	300-gallon recycle tank located in the Maintenance Building
Hydrogen	PCU working fluid	k-bottles mounted on each SunCatcher	Usage of 50,000 cubic feet per day	Initial fill
Ethylene glycol	Inlet air chiller loop – alternating	Maintenance buildings	110,000 gallons, initial fill, with usage of 46 gallons per month	Initial fill
Various solvents, detergents, paints, and other cleaners	Building maintenance and equipment cleaning	Maintenance buildings	Three 55-gallon drums, commercial 1-gallon containers	Ten 55-gallon drums, commercial 1-gallon containers
Gasoline	Maintenance vehicles	Double-wall 5,000 gallon refueling station with containment	2,500 to 5,000 gallon refueling stations	Full tank of 5,000 gallons

Table 3-12
Summary of Non-Water Treatment Materials Usage and Storage

Chemical	Application	Storage Location	Storage or Usage Quantity	
			Average	Maximum
Diesel fuel	Fire water pump and maintenance vehicles	Fire water skid double-wall 5,000 gallon refueling station with containment	100 gallons for initial fill, 2,500 to 5,000 gallon refueling stations	Maintain full diesel tank of 5,000 gallons

Source: SES Solar Two, LLC, 2008.
Notes:
N/A = not applicable
PCU = Power Conversion Unit

The storage, use, and handling of these hazardous materials will be in accordance with applicable LORS and will be conducted as listed below.

- An HMMP will be developed and implemented before turnover of site management from the construction contractor to the operating company.
- Project personnel will be trained in hazardous materials and hazardous waste awareness, handling, and management as required for their level of responsibility.
- Bulk chemicals will be stored in the original shipping container provided by and returned to the chemical provider.
- Hydrogen gas will be provided and refilled at each SunCatcher k-bottle by the gas provider, with storage facilities for k-bottles following all applicable LORS. These are outlined in Appendix K, Hydrogen System Design Criteria.
- Chemical storage areas and feed/transfer areas will be equipped with secondary containment sufficient to contain the volume of the largest container or tank including an allowance for rainwater.
- Small-quantity chemicals used for maintenance tasks will be kept in appropriate flammable material or corrosive material storage lockers per all applicable LORS.
- Periodic inspections will ensure that all containers are secure and properly marked.

3.8.4.2 Hazardous Wastes

Table 3-10, Summary of Operation Waste Streams and Management Methods, lists the types of wastes to be generated during commercial operation of the Project. These wastes will be managed in accordance with the applicable LORS and will be consistent with the implementation of the HMMP for the Project. Key aspects of Project waste management are listed below.

- The Applicant will secure an EPA Hazardous Waste Generator ID number before turnover of site management from the construction contractor to the operating company.

- All hazardous wastes will be stored in appropriate bulk storage containers or in labeled 55-gallon drums equipped with secondary containment and closed tops with bungs for liquid wastes or in secured open-top drums for solid wastes.
- All waste drums will be stored in accordance with good practice and applicable LORS, and will be protected from environmental conditions; including rain, wind, and direct heat; and physical hazards such as vehicle traffic and sources of heat and impact.
- Storage of hazardous waste will at no time exceed 90 days from the date of initial accumulation of a total of 55 gallons of hazardous waste or more on-site.
- PCU engine oil will be stored in 150-gallon double-walled storage tanks on-site in accordance with good engineering practices and applicable LORS. Two tanks will contain recovered oil from PCU overhauls to be filtered for re-use in PCU operation. Filtered oil will be contained in two additional 150-gallon double-walled tanks for storage.
- Elevation and azimuth gearbox oil will be stored in 150-gallon double-walled storage tanks on-site in accordance with good engineering practices and applicable LORS. One tank will contain recovered oil from PCU overhauls to be filtered for re-use in PCU operation. Filtered oil will be contained in a second 150-gallon double-walled tank for storage.
- Waste lubricating oils will be recovered and reclaimed by a waste oil-recycling contractor.
- Used hydrogen gas k-bottles will be stored to the specific requirements outlined in NFPA 50A following good engineering practices and applicable LORS. The cylinder storage location will be in a well-ventilated, dry compound, secured from unauthorized access, well protected from vehicle, pedestrian, and other potential sources of impact, and separated from other potentially combustible materials or other oxidizers by a barrier of noncombustible material. Further description of the storage and handling of hydrogen gas is outlined in Appendix K, Hydrogen System Design Criteria.
- Spent lubricating oil filters from PCUs and vehicles will be disposed at an authorized waste disposal facility.
- Batteries will be reclaimed and recycled by authorized facilities.
- California-authorized and certified hazardous waste haulers will transport hazardous wastes to registered waste treatment, storage, disposal, and recycling facilities.
- Hazardous waste generation, handling, and storage areas will be inspected and monitored on a regular basis.
- Emergency response and reporting will be performed per written procedures that follow government and industry requirements and standards.
- Workers will be trained to handle hazardous wastes generated at the site.

AES of San Diego, located at 9119 Birch Street, Spring Valley, California, has been identified as a business that specializes in transporting, disposing, and recycling of hazardous waste. AES works in accordance with EPA and either recycles or treats all hazardous waste by distributing different types of materials to appropriate companies in the area. Table 3-13, Business Listings of Specific Hazardous Waste Handlers, lists the appropriate businesses that address the specific types of hazardous waste.

Table 3-13
Business Listings of Specific Hazardous Waste Handlers

Hazardous Material Type	AES Distribution List	Contact Information and Location
All fluids and wastes from trucks (motor oil, coolant, hydraulic fluid, etc.)	D-K Environmental Refinery	323-268-3387 Los Angeles, CA
Spent alkaline batteries and spent lamps from lighting fixtures	Lighting Resources, LLC Universal Waste	800-572-9253 Ontario, CA
Absorbent automotive waste (plus contaminated dirt and gravel)	Siemens Carbon Regeneration Facility	866-372-9378 Colorado River Indian Reservation, Near Parker, AZ
Spent lead-acid or nickel-cadmium batteries	Exide Technologies	818-252-2022 Arleta, CA

Source: SES Solar Two, LLC, 2008.
Note:
This table also appears in Appendix L, Hazardous Materials Handling.

3.8.4.3 Accidental Release

Four types of hazardous materials will be used at the Project Site during the operational phase that pose a risk of accidental release: hydrogen gas, gasoline fuel, diesel fuels for Project vehicles, and transformer insulating oil.

The most likely cause of an accidental release would be gasoline or diesel fuel leakage due to an accidental collision or a spill while refueling a maintenance vehicle. A less likely possibility of tank leakage is aging tank material and/or oxidation of the tank structure.

Protective measures to be adopted during a gasoline spill include the following.

- Eliminate all sources of ignition in the vicinity of the spill or released vapor.
- If the material is released into the work area, evacuate the area immediately. Monitor area with combustible gas indicator.
- Stop the source of the release if it can be done without risk.
- Contain the release to prevent further contamination of soil, surface water, or groundwater.
- Clean up the spill as soon as possible, observing precautions in exposure controls/personal protection.
- Use appropriate techniques such as applying non-combustible absorbent materials or pumping.
- Ensure that all equipment used when handling the product is grounded.
- Use a vapor suppressing foam to reduce vapors.
- Use clean, non-sparking tools to collect absorbed material.
- Where feasible and appropriate, remove contaminated soil. Place contaminated materials in disposable containers and dispose of in a manner consistent with applicable LORS.

- Report gasoline spills to local authorities as appropriate or required. This material is covered under the EPA-administered Comprehensive Environmental Response, Compensation and Liability Act of 1980 (CERCLA) Petroleum Exclusion. Therefore, gasoline releases to the environment may not be reportable under CERCLA.

Transformer oil poses a minor risk of accidental spill.

A second cause of accidental release could occur during the refilling of a SunCatcher hydrogen k-bottle cylinder. These cylinders contain 196 cubic feet and the engine contains 14 cubic feet for a total of 210 cubic feet. This amount is below the 400-cubic-foot threshold defined in 29 Code of Federal Regulations 1910.103 and NFPA-55, Chapter 10. Even though the system is exempt from these requirements, they will be considered for the Application for Certification.

Only experienced and properly instructed personnel will handle compressed hydrogen gas. During filling, the cylinders will be secured in an upright position. The valve protection cap will be removed only just before connecting the cylinder to the manifold. The cylinder units will be electrically bonded to the system before discharging hydrogen. Personnel will ensure all connections will remain gas-tight during filling.

If a release were to occur, personnel would be required to evacuate the immediate area then eliminate any possible sources of ignition, provide necessary ventilation, and shut off the source of hydrogen, if possible. If hydrogen is leaking from a cylinder or valve, personnel would be required to call the supplier's emergency phone number. Since this type of incident would most likely occur at the SunCatcher, personnel would likely be instructed to allow the hydrogen gas to dissipate to the atmosphere. Hydrogen poses no adverse effects on the environment. The risk of fire is minimized because refilling operations occur outdoors, preventing hydrogen from attaining the minimum 4 percent lower explosive limit.

Appendix K, Hydrogen System Design Criteria, provides further information on the handling of hydrogen gas.

Transformer oil is not stored on-site except in the transformers. Each substation transformer contains approximately 12,000 gallons of insulating oil. Each GSU contains approximately 530 gallons of oil. The total transformer oil contained in all of the transformers amounts to approximately 403,000 gallons.

Substation transformers will be delivered to the site without the oil. The oil will be inserted into the transformer tanks from delivery tankers on-site. Precautions will be taken during oil transfer to prevent spills. Adsorbent materials will be carried on the supply truck for quick response to an inadvertent oil spill. Any soil contaminated by a spill will be removed to an off-site hazardous waste disposal facility. Substation transformer pads will be designed for containment of the transformer oil in the event the tank is breached.

GSUs will be filled with oil when they are delivered to the Project Site.

During Project operation, samples of transformer oil will be drawn for testing from a test port on each transformer tank approximately every 3 months. Oil will be removed from the tank for maintenance on intervals of 10 to 15 years.

3.8.4.4 Storm Water Management

Storm water is considered a wastewater stream. A storm water drainage system designed to match existing drainage patterns and meeting all local regulations will collect and direct all rainwater from the entire Project Site, managing the flow through the use of existing dry washes, swales, ditches, culverts, and site grading to the pre-development site discharge location. Erosion and sedimentation control will be implemented during construction to retain sediment on-site and to prevent violations of water quality standards. These actions will be taken in accordance with the BMPs. A Storm Water Pollution Prevention Plan will be prepared to conform with State Water Resource Control Board Order Number 99-08-DWQ, General Permit Number CAS000002.

The proposed site development will slightly alter the land areas of the site. Existing sparse vegetation will be removed as required during site preparation. The general preparation of the overall site will be followed by the grading activities required for the construction of the roadways and buildings. Grading for the construction of the roadways and buildings may include application of earth-binding materials to disturbed areas not occupied by Project facilities or surfaced with concrete, asphalt, or crushed aggregate.

Site drainage during construction will follow pre-development flow patterns, with ultimate discharge to Dunaway Road at the northeastern property boundary. Low-flow culverts consisting of a small-diameter storm drain with a perforated stem pipe will be installed for sediment control and to provide for storm peak attenuation. These are based on BMPs for erosion and sediment control; they are illustrated in Figure 3-30, Low Flow Culverts, and Figure 3-31, Low Flow Culverts Under Solar Field Access Routes.

Roadway dips, as illustrated in the Figure 3-29, Arizona Crossing, will be used for major washes where the channel cross section exceeds 8 feet in width and 3 feet in depth or exceeds 20 feet in width and 2 feet in depth. In the Main Services Complex, the storm water will be directed to a retention basin, where the site runoff will infiltrate and/or evaporate. The retention basin will be sized to meet the Imperial County development criteria.

The temporary erosion and sedimentation control measures to be used during construction will be designed to prevent sediment from being displaced and carried off-site by storm water runoff. Before beginning excavation activities, a silt fence, straw bales, or other BMPs will be installed along the perimeter of the Project, where minor runoff to off-site areas could occur. The silt fence will filter sediments from construction runoff. Berms with perforated risers will be used at road crossings and other locations as needed to control sediment transportation. During construction, the extent of earth disturbances will be minimized as much as is practical. A sediment trap will be constructed for the major site runoff discharge. The sediment trap will be located immediately upstream of the property boundary.

Diversion ditches and/or berms will be constructed as necessary to divert runoff from off-site areas around the construction site. Temporary BMP control measures will be maintained as necessary throughout the construction period.

3.9 PROJECT CONSTRUCTION

3.9.1 Project Construction Schedule

The Solar Two Project will be developed in two phases. The schedule will be approximately 58 months in duration, as described on Figure 3-40, Solar Two Project Milestone Schedule – Phase I, and Figure 3-41, Solar Two Project Milestone Schedule – Phase II. Construction will require approximately 40 months. Major milestones are listed in Table 3-14, Project Schedule Major Milestones.

Table 3-14
Project Schedule Major Milestones

Activity	Time Frame
Pre-construction initiated	Y2/Q2
Project approval initiated	Y2/Q1
Design documents initiated	Y2/Q1
Bid and award initiated	Y2/Q2
Procurement initiated	Y1/Q1
Phase I	
Phase I – Start Construction	**Y0/Q0**
Construction preps completed	Y1/Q1
Site layout completed	Y1/Q1
Off-site transmission completed	Y1/Q2
Civil completed	Y1/Q4
Phase I – Substation and Transmission	**Y1/Q3**
Bury cable, Pole and 9-MW infrastructure completed	Y1/Q1
On-Site transmission lines (first circuit)	Y1/Q3
Substation infrastructure (first two-fifths)	Y1/Q3
Controls for first 18 MW	Y1/Q1
Phase I – SunCatcher Installation	**Y2/Q3**
Final road prep and dust control	Y2/Q3
Foundations complete	Y2/Q1
18-MW power collection ready	Y2/Q3
SunCatcher assembly complete	Y2/Q3
Phase II	
Design documents initiated	Y1/Q1
Bid and award initiated	Y1/Q2
Procurement initiated	Y2/Q1
Phase II – Start Construction	**Y2/Q1**
Site layout completed	Y2/Q1
Civil completed	Y2/Q3
Phase II – Substation and Transmission	**Y2/Q2**
Bury cable, pole, and 9-MW infrastructure	Y2/Q1
On-site transmission (second circuit)	Y2/Q2
Substation infrastructure	Y2/Q1
Controls for first 18 MW	Y2/Q1

Table 3-14
Project Schedule Major Milestones

Activity	Time Frame
Phase II – SunCatcher Installation	**Y4/Q2**
Final road prep and dust control	Y4/Q1
Foundations complete	Y3/Q2
18-MW power collection ready	Y3/Q4
SunCatcher assembly	Y4/Q2

Source: SES Solar Two, LLC, 2008.
Notes:
The year/quarter timeframes are referenced to the Phase I activity, "Start of Construction."
Y = year
Q = quarter
MW = megawatt

Heavy construction for the Project will be scheduled to occur between 0700 and 1900 Monday through Friday. Additional hours may be necessary to make up schedule deficiencies or to complete critical construction activities.

Some activities will continue 24 hours per day, 7 days per week. These activities include, but are not limited to, SunCatcher assembly, refueling of equipment, staging of materials for the next day's construction activities, quality assurance/control, and commissioning.

3.9.2 Construction Site Security

The Project Site will be fenced at the start of construction, as described in Section 3.4.1, Project Site Arrangement. The construction entrance to the site will be via a gated entrance from Dunaway Road at the eastern boundary of the site. A second gated entrance will be provided on the northern boundary of the site, to Evan Hewes Highway. The Dunaway Road gate will be used for constructed-related entry. The Evan Hewes Highway gate will be used for construction-related exit from the site; this gate will also be used for both entry and exist during Project operations once the first portion of the Project is energized and tied to the grid.

The construction laydown and staging area east of Dunaway Road will be fenced with a temporary chain-link fence, with a gated entrance and egress from Dunaway Road.

3.9.3 Site Mobilization

Project facilities and amenities will be established during the first month of the build-out. The majority of these facilities will be located in the 11-acre construction laydown area adjacent to the Main Services Complex, which will be located within the Project Site approximately 1.5 miles south of the construction exit gate at Evan Hewes Highway. Project amenities will consist of site offices, restroom facilities, meal rooms, limited parking areas, vehicle marshalling areas/traffic staging, and construction material/equipment storage areas. Construction power to the Project Site facilities will be provided by mobile diesel-driven generator sets and/or temporary service(s) from IID. Additional construction employee parking will be provided on the 100-acre laydown and staging area east of Dunaway Road. Employees will be moved to and from the Project Site from surrounding areas and/or the Dunaway Road parking area in up to 10 buses and other mass conveyance vehicles.

3.9.4 Project Site Preparation

The ground surface at the Solar Two Project Site slopes northeast. The western portion of the site west of the SDG&E transmission line is characterized by rolling terrain with well-defined washes. East of the SDG&E transmission line, the site terrain has uniform and gentle slopes.

Site preparation will be based on avoiding major washes and minimizing surface-disturbing activities. Also, areas of sensitive habitat and cultural resource will be avoided wherever possible.

Brush trimming will be conducted between alternating rows of SunCatchers, as illustrated in Figure 3-11, Solar Two 1.5-MW Solar Group Plan. Brush trimming consists of cutting the top of the existing brush while leaving the existing native plant root system in place to minimize soil erosion.

After brush has been trimmed, blading for roadways and foundations will be conducted between alternating rows of SunCatchers, as illustrated in Figure 3-28, 1.5-MW Solar Two Project Construction Disturbance Plan, to provide access to individual SunCatchers. Blading will consist of removing terrain undulations and will be limited to 3 feet in cut and 3 feet in fill. The blading operations will keep native soils within 100 feet of the pre-development location, with no hauling of soils across the site.

Localized rises or depressions within the individual 1.5-MW solar groups will be removed to provide for proper alignment and operation of the individual SunCatchers.

Paved roadways will be constructed as close to the existing topography as possible, with limited cut-and-fill operations to maintain roadway design slope to within a maximum of 10 percent.

Limited localized channel grading will take place to improve channel hydraulics and to control flow direction where buildings and roadways are proposed. The Main Services Complex and the electrical substation will be protected from a 100-year flood by berms or channels that will direct the flow around the perimeter of the sites, if required.

Minor grading will also be required for building foundations and pads and parking areas in the Main Services Complex and substation areas.

The clearing, blading, and grading operations will be undertaken using standard contractor heavy equipment. This equipment will consist of, but not be limited to, motorgraders, bulldozers, elevating scrapers, hydraulic excavators, tired loaders, compacting rollers, and dump trucks.

3.9.5 Foundations

From the preliminary geotechnical investigations, it is expected that lightly loaded equipment and structures, including some of the equipment foundations in the substation yard, small equipment such as the fire water pump and standby generator, the support structures for the water treatment plant and the hydrogen storage area, and the transmission line lattice steel towers will be supported on shallow footings. Shallow footings will be continuous strip and isolated spread footings.

The majority of each SunCatcher will be supported by a single metal fin-pipe foundation that is hydraulically driven into the ground. These foundations are expected to be approximately 20 feet long and 24 inches in diameter, with 12-inch wide fins extending from each side of the

pipe pile. Shallow drilled pier concrete foundations of approximately 36 inches in diameter and an embedment depth with a minimum socketed depth into rock of 6 feet would be used for hard and rock-like ground conditions.

The buildings and major structures such as yard tanks will be supported on shallow spread and continuous footings or mat-type foundations.

Deep foundations will be required for heavy items, such as the power transformers at the electrical substation.

3.9.6 Groundwater

A recent geotechnical investigation conducted for the Project indicated that the depth to groundwater on the site is greater than 45 feet. The deepest Solar Two Project excavations are anticipated to be approximately 20 feet long for the SunCatcher metal fin-pipe foundations. Accordingly, it is not anticipated that groundwater will be encountered during construction. If groundwater is encountered and dewatering is required, then approved BMPs, such as those described in the State of California Storm Water BMP Handbook NS-2, dated January 2003, will be employed.

3.9.7 Water

Storm water discharges from construction activities are subject to BMPs specifically designed for construction activities. Approved BMPs appropriate to the Project Site and its specific conditions will be selected from the California Storm Water BMP Handbook.

The following soil mitigation measures will be implemented to reduce potentially significant soils effects to less-than-significant levels. An acceptable level of soil erosion, as used herein, is defined as that amount of soil loss that would not affect (i.e., limit) the potential long-term beneficial uses of the soil as a growth medium or adversely affect water resources because of accelerated erosion and subsequent sedimentation. Section 5.5, Water Resources, discuses mitigation measures related to potential effects to water quality associated with soil erosion.

With implementation of the mitigation measures listed below, no significant unavoidable adverse effects to soils resources are anticipated because of Project construction.

- **Soil-1:** Conduct grading operations consistent with the Imperial County Grading Ordinance.
- **Soil-2:** Prepare and implement a detailed Erosion Control Plan before construction, which may be a component of the Storm Water Pollution Prevention Plan.
- **Soil-3:** Limit soil erosion/dust generation by wetting active construction areas (including roads) with water or by applying dust palliatives (soil binders).
- **Soil-4:** Stabilize disturbed areas that will not be covered with structures (e.g., buildings or collectors) or pavement after grading and/or cut-and-fill operations. Stabilization methods will include moisturizing and compacting and/or application of polymeric soil stabilizers. The disturbed areas of the water line route will be reseeded using a seed mixture native to the area.
- **Soil-5:** Minimize disturbance of soils and vegetation by reducing access and construction areas to smallest practical dimensions.

- **Soil-6:** Cut/mow vegetation when removal is necessary; clear vegetation only to the extent necessary during construction activities.
- **Soil-7:** Segregate and stockpile removed topsoil for reuse if practicable.
- **Soil-8:** Implement drainage control measures and grade Project Site to direct surface water into the retention basins.
- **Soil-9:** Conduct post-construction monitoring of areas that were disturbed during the construction phase.

In addition to the soil mitigation measures identified above, the following BMPs may be selected.

- Temporary soil stabilization (SS) techniques, such as scheduling construction sequences to minimize land disturbance during the rainy and non-rainy seasons and employing BMPs appropriate for the season; preserving existing vegetation by marking areas of preservation with temporary orange propylene fencing; using geotextiles, mats, plastic covers, or erosion control blankets to stabilize disturbed areas and protect soils from erosion by wind or water; using earth dikes, drainage swales, or lined ditches to intercept, divert, and convey surface runoff to prevent erosion; using outlet protection devices and velocity dissipation devices at pipe outlets to prevent scour and erosion from storm water flows; and/or using slope drains to intercept and direct surface runoff or groundwater to a stabilized water course or retention area.
- Sediment Control (SC) techniques, such as using silt fences, straw bales, and/or fiber rolls to intercept and slow the flow of sediment-laden runoff such that sediment settles before runoff leaves the site.
- Wind Erosion (WE) control by applying water or dust palliatives, as required, to prevent or alleviate windblown dust.
- Tracking Control (TC) techniques to limit track-out, such as using stabilized points of entering and exiting the Project Site and stabilized construction roadways on the site.
- Other measures, as appropriate, to comply with the regulations.

3.9.8 Heavy Equipment Delivery

Heavy construction equipment will be moved to the Project Site by road, using road transport suitable for the size and weight of that equipment. Primary equipment such as the 34.5-kV to 230-kV power transformers will be delivered to the Project Site by special conveyance due to their weight and size. Typically, deliveries of material and equipment to the site will be made by truck.

SunCatcher superstructures will be delivered to the assembly buildings on transport trucks in major components, with approximately 1.5 SunCatchers per trailer.

Delivery of other SunCatcher components (PCUs, mirrors, controls, drives, and wiring) will arrive on pallets, crates, or returnable racks by transport truck for assembly onto the erected superstructure, with approximately 40 units per transport truck.

3.9.9 Construction Workforce

The Projected monthly construction labor is presented in Table 3-15, Construction Trade Projection (750 MW), for the 40-month construction period. The size of the on-site workforce will range from 101 during month 1 to 731 during the peak period in month 7. Solar Two will provide approximately $40 million in payroll during the first year of the construction period. During construction, the average salary range per employee is expected to be approximately $20 to $60 per hour, including benefits.

3.9.10 Construction Traffic

Construction traffic should commence in or before the first quarter of 2009 and continue through the 40-month construction schedule. Traffic should peak during the first two quarters of 2010.

Every effort will be made to employ qualified subcontractors and construction personnel from the local area. Bid solicitations will be made through plan centers and trade publications that serve a 200-mile radius from the site and beyond. It is expected that 90 percent of the workforce will reside in Southern California, including the San Diego area. The remainder may come from other areas of the southwest. Many of the higher-skill-level positions required for essential trades, such as high-voltage line electricians, controls and information technology specialists, and engineers, will likely come from outside the local area. For construction of the Project, Solar Two will have access to a resource pool of workers with these specialized skills within:

- a 100-mile driving distance along interstate highways from the greater San Diego, California, area, and
- a 180-mile driving distance along interstate highways from the greater Riverside, California, area.

During Project construction, it is anticipated that specialized trades and higher-skill-level construction personnel will commute to the Solar Two Project Site on a weekly basis and stay in temporary housing or apartments during the week for the duration of the construction phase. Similarly, contractor or subcontractor employees will commute on a weekly basis and lease temporary housing or apartments in the El Centro area. The construction employee commutes will depend on the competitive bid selection of contractors and subcontractors and travel distance from their offices.

Construction trade personnel will be found through the San Diego–Imperial County Labor Council, which represents the local building trade unions. The council is located at 3717 Camino Del Rio South, San Diego, CA 92108 (phone: 619-283-5411; fax 619-281-1296).

Table 3-15
Construction Trade Projection (750 MW)

Discipline	Hours	Month After Construction Start																																											
		1	2	3	4	5	6	7	8	9	10	11	12	13	14	15	16	17	18	19	20	21	22	23	24	25	26	27	28	29	30	31	32	33	34	35	36	37	38	39	40	Highest Per Day Requirement by Solar Two During Project	El Centro Total Available for the Project
Carpenters	83,472	10	14	31	31	31	43	47	40	36	28	28	28	21	11	11	10	10	10	10	10	10	10	10	10	10	10	10	0	0	0	0	0	0	0	0	0	0	0	0	0	47	80
Concrete Crews	81,008	9	15	29	29	29	46	46	42	36	24	24	24	21	11	11	10	10	10	10	10	10	10	10	10	10	10	10	0	0	0	0	0	0	0	0	0	0	0	0	0	46	140
Electricians	212,010	17	28	57	57	57	84	84	60	54	54	54	54	69	69	113	105	105	88	48	48	44	44	44	44	44	44	44	44	44	44	44	44	44	44	44	0	0	0	0	0	113	210
Ironworkers	100,330	19	23	41	41	41	44	48	36	32	24	24	24	36	26	26	25	25	10	10	10	10	10	10	10	10	10	10	0	0	0	0	0	0	0	0	0	0	0	0	0	48	130
Laborers	153,557	17	43	65	62	62	142	142	68	30	30	30	30	56	41	51	46	46	32	22	17	17	17	17	17	17	17	17	10	10	10	10	10	10	10	10	0	0	0	0	0	142	540
Miscellaneous Crews	10,000	0	0	0	0	0	10	10	10	10	10	10	10	0	0	0	0	0	0	0	0	0	0	0	0	0	0	0	0	0	0	0	0	0	0	0	0	0	0	0	0	10	630
Operators	205,183	25	82	93	75	75	86	86	72	59	51	51	51	84	88	67	61	52	34	34	27	26	25	25	25	25	25	25	2	2	2	2	2	2	2	2	1	1	1	1	0	88	190
Plumbers	25,040	0	5	9	9	9	22	26	26	22	14	14	14	0	0	0	0	0	0	0	0	0	0	0	0	0	0	0	0	0	0	0	0	0	0	0	0	0	0	0	0	26	100
Solar Two Technicians	145,920	0	0	0	0	0	16	16	16	16	16	16	16	16	16	16	16	16	16	16	16	32	32	32	32	32	32	32	32	32	32	32	32	32	32	32	32	32	32	32	32	32	N/A
SunCatcher Assemblers	371,200	0	0	0	0	0	64	64	64	64	64	64	64	64	64	64	64	64	64	64	64	64	64	64	64	64	64	64	64	64	64	64	64	64	64	64	64	64	64	64	64	64	N/A
SunCatcher Electricians	92,800	0	0	0	0	0	16	16	16	16	16	16	16	16	16	16	16	16	16	16	16	16	16	16	16	16	16	16	16	16	16	16	16	16	16	16	16	16	16	16	16	16	N/A
SunCatcher Ironworkers	185,600	0	0	0	0	0	32	32	32	32	32	32	32	32	32	32	32	32	32	32	32	32	32	32	32	32	32	32	32	32	32	32	32	32	32	32	32	32	32	32	32	32	N/A
SunCatcher Laborers	58,880	0	0	0	0	0	16	16	16	16	16	16	16	16	16	16	16	16	16	16	16	0	0	0	0	0	0	0	0	0	0	0	0	16	16	16	16	16	16	16	16	16	N/A
SunCatcher Material Handlers	92,800	0	0	0	0	0	16	16	16	16	16	16	16	16	16	16	16	16	16	16	16	16	16	16	16	16	16	16	16	16	16	16	16	16	16	16	16	16	16	16	16	16	N/A
SunCatcher Operators	29,440	0	0	0	0	0	8	8	8	8	8	8	8	8	8	8	8	8	8	8	8	0	0	0	0	0	0	0	0	0	0	0	0	8	8	8	8	8	8	8	8	8	N/A
SunCatcher Teamsters	44,160	0	0	0	0	0	12	12	12	12	12	12	12	12	12	12	12	12	12	12	12	0	0	0	0	0	0	0	0	0	0	0	0	12	12	12	12	12	12	12	12	12	N/A
SunCatcher Technicians	185,600	0	0	0	0	0	32	32	32	32	32	32	32	32	32	32	32	32	32	32	32	32	32	32	32	32	32	32	32	32	32	32	32	32	32	32	32	32	32	32	32	32	N/A
Teamsters	65,160	4	60	49	24	24	25	25	7	5	5	5	5	31	53	29	28	26	24	24	4	4	3	3	3	3	3	3	1	1	1	1	1	1	1	1	1	1	1	1	0	60	680
Technicians	3,504	0	0	0	0	0	5	5	5	5	5	5	5	5	1	1	1	1	0	0	1	1	1	1	1	1	1	1	0	0	0	0	0	0	0	0	0	0	0	0	0	5	60
Totals	**2,145,663**	**101**	**270**	**374**	**328**	**328**	**719**	**731**	**578**	**501**	**457**	**457**	**457**	**535**	**512**	**521**	**498**	**487**	**420**	**370**	**339**	**314**	**312**	**312**	**312**	**312**	**312**	**312**	**249**	**249**	**249**	**249**	**249**	**285**	**285**	**285**	**230**	**230**	**230**	**230**	**228**	**813**	**2,760**

Source: Bureau of Labor Statistics, 2008.
Note:
N/A = not applicable

The estimated construction traffic is summarized in Table 3-16, Estimated Daily Construction Traffic.

Table 3-16
Estimated Daily Construction Traffic

Vehicle Type	Average Daily Round Trips	Peak Daily Round Trips
Construction personnel (buses)	12	24
Construction personnel (private vehicles)	30	70
Delivery trucks	81	173
Heavy vehicles and trucks	20	46
Totals	**143**	**313**

Source: SES Solar Two, LLC, 2008.

3.9.11 Land Disturbance

The estimated land disturbance for the Project is provided in Table 3-17, Estimated Disturbed Area Summary. Figure 3-28, 1.5-MW Solar Two Construction Disturbance Plan, shows the disturbed area for a typical 1.5-MW solar group.

Table 3-17
Estimated Disturbed Area Summary[1,2]

Project Component Item	Area		Proposed Length	Comments
	Construction Disturbance	Operations Permanent Disturbance		
Off-Site Development				
Off-site access road	4.5 acres	3.6 acres	1.3 miles	30-foot width for roadway and drainage
Off-site transmission line	91.6 acres	Included below	7.6 miles	50 feet each side of center
Tower structures	Included above	1.2 to 1.4 acres		85 to 100 towers x 1,024 SF per tower
Waterline and pumping station	8.0 acres	1 acre	3.4 miles	9.5 feet each side of center
Off-site electrical and communications overhead service	0.3 acre	Included below	539 feet	12 feet each side of center
Poles	Included above	26 SF		2 poles x 13 SF per pole
Subtotal	**104.4 acres**	**4.6 acres**		
On-Site Balance-of-Plant Development				
Construction staging and construction administration area east of Dunaway Road	25 acres	N/A		N/A
On-site construction laydown	11 acres	N/A		N/A
Site boundary fence line	29.9 acres	14.9 acres	20.5 miles	12-foot width construction access; 3 feet each side of the fence
Site paved roadways	137.6 acres	137.6 acres	25.2 miles	45-foot width for roadway and drainage

Table 3-17
Estimated Disturbed Area Summary[1,2]

Project Component Item	Area		Proposed Length	Comments
	Construction Disturbance	Operations Permanent Disturbance		
Unpaved perimeter roadways	16.2 acres	16.2 acres	11.2 miles	12 feet wide
Main Services Complex, parking and services	14.4 acres	14.4 acres		
Assembly buildings and storage	14 acres	N/A		
On-Site Wet and Dry Utilities Access				
Water pipeline	8.7 acres	N/A	3.8 miles	9.5 feet each side of center
On-site electrical and communications overhead service	3.8 acres	N/A	6,914 feet	12 feet each side of center
Solar Two Substation	7.7 acres	5.2 acres		650 feet by 350 feet
On-site transmission line	34.1 acres	N/A	2.8 miles	50 feet each side of center
Transmission access road	Included above	4.1 acres	2.8 miles	12 feet wide
Transmission tower structures	Included above	0.5 to 0.7 acre		35 to 40 towers at 1,024 SF per tower
34.5-kV overhead runs to Solar 2A Substation	4.0 acres	N/A		10.95 miles by 12-foot wide with a significant portion overlapping other construction disturbed areas (75 percent)
Poles	Included above	0.1 acre		
34.5-kV runs to overhead lines	5.2 acres	N/A		
Subtotal	**271.31 acres**	**173.73 acres**		
Solar Field Development = 500 by 1.5-MW Solar Groups [2,3]				
North-south access routes	245 acres	245 acres	168 miles	1,709 feet per 1.5 MW (0.47 acre-total) based on 12-foot wide road
East-west access routes	148.3 acres	148.3 acres	102 miles	1,033 feet per 1.5 MW (0.28 acre-total)
Electrical Collection System				
600 V underground	35 acres	N/A	576 miles	5,850 feet per 1.5 MW (0.52 acre-total) based on 2-foot each side of center
34.5-kV underground	20 acres	N/A	45 miles	460 feet per 1.5 MW (0.06 acre-total) based on 3-foot each side of center

Table 3-17
Estimated Disturbed Area Summary[1,2]

Project Component Item	Area		Proposed Length	Comments
	Construction Disturbance	Operations Permanent Disturbance		
SunCatcher Installation				
North-south access/ SunCatcher	440 acres	440 acres		1,600 feet per 1.5 MW (0.88 acre-total) based on 20-foot by 32-foot access/unit
East-west access/ SunCatcher	1,735 acres	1,735 acres		4,200 feet per 1.5 MW (3.47 acres-total) based on 36-foot by 70-foot access/unit
Subtotal	**2,623.4 acres**	**2,568.4 acres**		
Total Area	**3,000.1 acres**	**2,746.6 acres**		

Source: SES Solar Two, LLC, 2008.
Notes:
[1]Refer to Figures 3-1 through 3-3 for locations of Project components.
[2]Assumes 750-MW net development of 30,000 SunCatchers.
[3]Reference Figure 3-28, 1.5-MW Solar Two Construction Disturbance Plan.
During installation of the SunCatchers, only 50 percent of the total land will be disturbed. The modularity of the SunCatcher design and off-site manufacturing will enable a phased deployment, thereby minimizing the proportion of the overall site that is disturbed at any give time during construction.
The plan site layout minimizes traffic road operations of the Project.
kV = kilovolt
MW = megawatt
N/A = not applicable
SF = square feet
V = volts

3.9.12 Materials and Equipment Staging Area

Two construction staging and laydown areas will be used for the Project. A 100-acre construction laydown area that includes a 25-acre construction staging area will be provided east of Dunaway Road within Section 14. An 11-acre construction laydown area will be provided adjacent to the Main Services Complex.

Both the 25-acre construction staging area to the east of Dunaway Road and the 11-acre construction laydown area adjacent to the Main Services Complex will contain temporary construction facilities, including site offices, restrooms, meal rooms, conference rooms, storage facilities, and parking and vehicle maintenance and storage areas.

The 11-acre construction laydown area adjacent to the Main Services Complex will also contain a temporary fueling station. An 8-foot-diameter by 13⅓-foot-long diesel fuel storage tank with secondary containment will be temporarily located on a paved surface in this laydown area.

The 100-acre laydown area east of Dunaway Road is nearly level and thus requires little grading. The 11-acre laydown area adjacent to the Main Services Complex is on a gently sloping, rocky area that will require minimum grading and fill operations to create a level area. Pads will be prepared for setting the trailers housing the temporary construction facilities.

The 25-acre construction staging area contained within the 100-acre construction laydown area located east of Dunaway Road is shown on Figure 3-42, Construction Laydown Area Site Plan. The 11-acre construction laydown area adjacent to the Main Services Complex is shown on Figure 3-43, Main Services Complex Construction Laydown Area.

3.9.13 Construction Equipment Requirements

During construction, a variety of equipment will be required. Estimates of the types of equipment and the timing of their use are provided in Table 3-18, Estimated Construction Equipment Usage Schedule.

3.9.14 Project Operation

The Solar Two Project will be an "as-available" resource. Therefore, the Project will operate anywhere between a minimum of approximately 18 MW net when the first units are interconnected to the grid during the construction period to 750 MW on completion of construction. The capability for independent operation of all 30,000 units will give maximum flexibility in operations. The Project is expected to have an annual availability of 99 percent.

The Project will be dispatched by the CAISO, through day-ahead, hour-ahead, and real-time scheduling, as required to meet the demands of the Southern California market. The market will dictate unit operations and total power requirements.

The Solar Two Project will operate approximately 3,500 hours per annum and is expected to have an overall availability of 99 percent or higher. The number of available operating hours is determined by the availability of the sun's energy at greater than 250 watts per square meter. SunCatchers will be unable to generate electricity when the sun's energy is below 250 watts per square meter in the early morning or late evening hours and when cloud cover limits the sun's energy for power generation. Also, SunCatchers will be unable to generate electricity during daylight hours when the wind speed exceeds 35 miles per hour, as SunCatchers will be stowed in a safe de-track position at this wind speed to prevent damage. SunCatchers are designed to withstand wind speeds of 50 miles per hour in the operating mode and 90 miles per hour in the stowed position. Because the SunCatchers move slowly, they start moving into stow position once winds reach 35 miles per hour in order to be in stow position by the time winds reach 90 miles per hour. Because of the geographical size of the Project, cloud cover and/or wind conditions may only affect a portion of the Project at any given time.

It is expected that the Solar Two Project will be operated with a staff of approximately 164 full-time employees. The Project will operate 7 days per week, generating electricity during normal daylight hours when the solar energy is available. Maintenance activities will occur 7 days a week, 24 hours a day to ensure SunCatcher availability when solar energy is available. Table 3-19, Projected Operations and Maintenance Personnel Requirements, provides a projection of the breakdown of operating, maintenance, engineering, contract, and administration staffing by 3-month periods for the first 8 years of operation.

Table 3-18
Estimated Construction Equipment Usage Schedule

Construction Equipment Description	HP	D	G	Month After Construction Start																																											
				1	2	3	4	5	6	7	8	9	10	11	12	13	14	15	16	17	18	19	20	21	22	23	24	25	26	27	28	29	30	31	32	33	34	35	36	37	38	39	40
4-Wheeler	15		X	2	2	2	2	2	2	2	2	2	2	2	2	2	2	2	2	2	2	2	0	0	0	0	0	0	0	0	0	0	0	0	0	0	0	0	0	0	0	0	0	0
Aerial lift	120	X		6	6	7	7	7	7	7	7	7	8	8	8	8	8	8	8	8	8	8	8	8	8	8	8	8	8	8	8	8	8	8	8	8	8	8	8	8	8	8	8	8
Air compressor	50	X		1	1	1	1	1	2	2	2	2	2	2	2	2	2	2	2	1	1	1	0	0	0	0	0	0	0	0	0	0	0	0	0	0	0	0	0	0	0	0	0	0
Asphalt paver	120	X			3	2	1	1	1	1	0	0	0	0	0	1	1	1	1	1	1	1	0	0	0	0	0	0	0	0	0	0	0	0	0	0	0	0	0	0	0	0	0	0
Backhoe	120	X		5	11	9	9	8	8	8	8	8	8	8	8	8	8	8	8	8	8	8	8	7	7	7	7	7	7	7	6	6	6	6	6	6	6	6	0	0	0	0	0
Compactor	120	X		4	10	10	8	8	6	6	6	5	5	5	5	7	7	7	7	7	7	7	4	4	3	3	3	3	3	3	1	1	1	1	1	1	1	1	1	1	1	1	0
Concrete pump	250	X		1	1	3	3	3	2	1	0	0	0	0	0	1	1	1	0	0	0	0	0	0	0	0	0	0	0	0	0	0	0	0	0	0	0	0	0	0	0	0	0
Crane	250	X		3	3	7	7	7	9	8	8	8	8	8	8	8	8	8	7	7	4	4	4	4	4	4	4	4	4	4	4	4	4	4	4	4	4	4	4	4	4	4	4
Dozer	250	X		2	2	2	2	2	2	2	2	2	2	2	2	2	2	2	2	2	2	2	2	2	2	2	2	2	2	2	0	0	0	0	0	0	0	0	0	0	0	0	0
Drilling rig	250	X		1	2	6	6	6	8	8	8	8	8	8	8	8	8	5	5	5	5	5	5	5	5	5	5	5	5	5	0	0	0	0	0	0	0	0	0	0	0	0	0
Dump truck	250	X		3	10	10	5	5	4	4	4	3	3	3	3	6	6	6	6	4	4	4	2	2	2	2	2	2	2	2	0	0	0	0	0	0	0	0	0	0	0	0	0
Flatbed truck	250	X		9	9	9	9	9	9	9	9	9	9	9	9	9	9	9	9	9	9	9	9	9	9	9	9	9	9	9	6	6	6	6	6	6	6	6	0	0	0	0	0
Fork lift	50	X		5	5	9	9	9	9	9	9	9	9	9	9	9	9	9	9	9	9	9	8	8	8	8	8	8	8	8	8	8	8	8	8	8	8	8	8	8	8	8	8
Generator	50	X		1	1	2	2	2	5	5	6	6	6	6	6	3	3	3	2	2	1	1	1	1	1	1	1	1	1	1	0	0	0	0	0	0	0	0	0	0	0	0	0
Grader	175	X		2	7	7	5	5	2	2	2	2	2	2	2	2	3	3	3	3	3	3	3	3	3	3	3	3	3	3	1	1	1	1	1	1	1	1	1	1	1	1	0
Light tower	50	X		1	1	2	2	2	2	2	2	2	2	2	2	2	2	2	1	1	1	1	0	0	0	0	0	0	0	0	0	0	0	0	0	0	0	0	0	0	0	0	0
Loader	250	X		2	7	7	7	7	7	7	7	7	5	5	5	7	7	7	6	4	4	4	2	2	2	2	2	2	2	2	0	0	0	0	0	0	0	0	0	0	0	0	0
Maxi sneeker (trencher)	50	X		0	2	3	3	3	6	6	6	6	6	6	6	6	6	6	6	6	6	6	6	6	6	6	6	6	6	6	6	6	6	6	6	6	6	6	0	0	0	0	0
Pickup truck	150		X	3	3	3	3	3	3	3	3	3	3	3	3	3	3	3	3	3	3	3	3	3	3	3	3	3	3	3	3	3	3	3	3	3	3	3	3	3	3	3	3
Skid steer (Bobcat)	50	X		0	0	0	0	2	4	4	4	5	5	5	5	5	5	5	5	5	5	5	5	5	5	5	5	5	5	5	5	5	5	5	5	5	5	5	0	0	0	0	0
Telehandler	120	X		0	0	0	0	2	6	4	4	4	4	4	4	4	4	4	4	4	4	4	4	4	4	4	4	4	4	4	4	4	4	4	4	4	4	4	4	4	4	4	4
Water truck	250	X		5	8	8	8	8	8	8	8	8	8	8	8	8	8	8	8	8	8	8	4	4	3	3	3	3	3	3	1	1	1	1	1	1	1	1	1	1	1	1	0
Welding machine	50	X		1	1	3	5	5	5	5	5	5	5	2	2	2	2	2	1	1	0	0	0	0	0	0	0	0	0	0	0	0	0	0	0	0	0	0	0	0	0	0	0
Totals				**57**	**95**	**112**	**104**	**107**	**117**	**113**	**112**	**111**	**110**	**107**	**107**	**113**	**114**	**111**	**105**	**100**	**95**	**95**	**78**	**77**	**75**	**75**	**75**	**75**	**75**	**75**	**53**	**53**	**53**	**53**	**53**	**53**	**53**	**53**	**30**	**30**	**30**	**30**	**27**

Source: SES Solar Two, LLC, 2008.
Notes:
D = diesel
HP = horsepower
G = gas

Table 3-19
Projected Operations and Maintenance Personnel Requirements

ID	Resource Description	Projected O&M Staffing			3-Month Periods After Notice to Proceed																																Man Months
		300 MW	600 MW	750 MW	Year 1				Year 2				Year 3				Year 4				Year 5				Year 6				Year 7				Year 8				
					Q1	Q2	Q3	Q4	Q1	Q2	Q3	Q4	Q1	Q2	Q3	Q4	Q1	Q2	Q3	Q4	Q1	Q2	Q3	Q4	Q1	Q2	Q3	Q4	Q1	Q2	Q3	Q4	Q1	Q2	Q3	Q4	
A	**General & Administration**																																				
1	Operations Manager	1	1	1	1	1	1	1	1	1	1	1	1	1	1	1	1	1	1	1	1	1	1	1	1	1	1	1	1	1	1	1	1	1	1	1	20
2	HR & Admin	1	2	2	1	1	1	2	2	2	2	2	2	2	2	2	2	2	2	2	2	2	2	2	2	2	2	2	2	2	2	2	2	2	2	2	37
3	OH&S Supervisor	1	1	1	0	0	1	1	1	1	1	1	1	1	1	1	1	1	1	1	1	1	1	1	1	1	1	1	1	1	1	1	1	1	1	1	18
4	General Accounting	1	2	3	1	1	1	1	1	1	2	2	2	2	2	2	2	2	2	2	3	3	3	3	3	3	3	3	3	3	3	3	3	3	3	3	38
	Total G&A	**4**	**6**	**7**	**3**	**3**	**4**	**5**	**5**	**5**	**6**	**6**	**6**	**6**	**6**	**6**	**6**	**6**	**6**	**6**	**7**	**7**	**7**	**7**	**7**	**7**	**7**	**7**	**7**	**7**	**7**	**7**	**7**	**7**	**7**	**7**	**113**
B	**Engineering**																																				
1	Operations Supervisor	2	3	3	0	0	0	2	2	2	2	2	2	2	2	2	3	3	3	3	3	3	3	3	3	3	3	3	3	3	3	3	3	3	3	3	42
2	Controls Engineer	1	2	2	0	0	0	1	1	1	1	1	1	1	1	1	2	2	2	2	2	2	2	2	2	2	2	2	2	2	2	2	2	2	2	2	25
3	Electrical Engineer	1	1	1	1	1	1	1	1	1	1	1	1	1	1	1	1	1	1	1	1	1	1	1	1	1	1	1	1	1	1	1	1	1	1	1	20
4	Mechanical Engineer	1	1	1	1	1	1	1	1	1	1	1	1	1	1	1	1	1	1	1	1	1	1	1	1	1	1	1	1	1	1	1	1	1	1	1	20
5	Maintenance Supervisor	2	4	4	0	0	0	2	2	2	2	2	2	2	2	2	4	4	4	4	4	4	4	4	4	4	4	4	4	4	4	4	4	4	4	4	50
	Total Engineering	**7**	**11**	**11**	**2**	**2**	**2**	**7**	**7**	**7**	**7**	**7**	**7**	**7**	**7**	**7**	**11**	**11**	**11**	**11**	**11**	**11**	**11**	**11**	**11**	**11**	**11**	**11**	**11**	**11**	**11**	**11**	**11**	**11**	**11**	**11**	**157**
C	**Non-Exempt Staff**																																				
1	Operating Technicians	4	6	7	0	0	0	4	4	4	4	4	4	4	4	4	6	6	6	6	6	6	6	6	7	7	7	7	7	7	7	7	7	7	7	7	84
2	SunCatcher Mirror Washing	16	32	40	0	0	0	2	2	4	6	8	10	12	14	16	18	20	22	24	26	28	30	32	34	36	38	40	40	40	40	40	40	40	40	40	274
3	Instrumentation & Control Technician	2	4	4	0	0	0	2	2	2	2	2	2	2	2	2	4	4	4	4	4	4	4	4	4	4	4	4	4	4	4	4	4	4	4	4	50
4	Electrician	2	4	4	0	0	0	2	2	2	2	2	2	2	2	2	4	4	4	4	4	4	4	4	4	4	4	4	4	4	4	4	4	4	4	4	50
5	Mechanical Technician	24	48	60	0	0	0	8	8	8	16	16	16	24	24	24	32	32	32	40	40	40	48	48	48	56	56	56	60	60	60	60	60	60	60	60	456
6	Commissioning Technicians	0	0	0	0	0	0	16	16	16	16	16	16	16	16	16	16	16	0	0	0	0	0	0	0	0	0	0	0	0	0	0	0	0	0	0	176
	Non-Exempt Subtotal	**48**	**94**	**115**	0	0	0	**34**	**34**	**36**	**46**	**48**	**50**	**60**	**62**	**64**	**80**	**82**	**68**	**78**	**80**	**82**	**92**	**94**	**97**	**107**	**109**	**111**	**115**	**115**	**115**	**115**	**115**	**115**	**115**	**115**	**1,090**
D	**Contract Staff**																																				
1	Security	8	8	8	8	8	8	8	8	8	8	8	8	8	8	8	8	8	8	8	8	8	8	8	8	8	8	8	8	8	8	8	8	8	8	8	160
2	Housekeeping	4	4	4	0	0	0	0	0	0	4	4	4	4	4	4	4	4	4	4	4	4	4	4	4	4	4	4	4	4	4	4	4	4	4	4	56
3	High-Voltage Maintenance	4	4	4	4	4	4	4	4	4	4	4	4	4	4	4	4	4	4	4	4	4	4	4	4	4	4	4	4	4	4	4	4	4	4	4	80
	On-Site Contract Subtotal	**16**	**16**	**16**	**12**	**12**	**12**	**12**	**12**	**12**	**16**	**16**	**16**	**16**	**16**	**16**	**16**	**16**	**16**	**16**	**16**	**16**	**16**	**16**	**16**	**16**	**16**	**16**	**16**	**16**	**16**	**16**	**16**	**16**	**16**	**16**	**296**
E	**Summer Mechanical Wash**	0	0	0	0	0	0	0	0	**4**	0	0	0	**12**	0	0	0	**20**	0	0	0	**28**	0	0	0	**36**	0	0	0	**44**	0	0	0	**44**	0	0	**64**
F	**Contingency at 10%**	0	**10**	**15**	**2**	**2**	**2**	**6**	**6**	**6**	**8**	**8**	**8**	**9**	**9**	**9**	**11**	**12**	**10**	**11**	**11**	**12**	**13**	**13**	**13**	**14**	**14**	**15**	**15**	**15**	**15**	**15**	**15**	**15**	**15**	**15**	**166**
G	**Grand Total**	**75**	**137**	**164**	**19**	**19**	**20**	**64**	**64**	**66**	**83**	**85**	**87**	**98**	**100**	**102**	**124**	**127**	**111**	**122**	**125**	**128**	**139**	**141**	**144**	**155**	**157**	**160**	**164**	**164**	**164**	**164**	**164**	**164**	**164**	**164**	**1,822**

Source: SES Solar Two, LLC, 2008.

Notes:

% = percent
Admin = Administration
G&A = general and administration
HR = human resources
MW = megawatt
O&M = operations and maintenance
OH&S = operations health and safety
Q = quarter
Y = year

3.10 PROJECT SAFETY DESIGN

3.10.1 Natural Hazards

The primary natural hazards at the Project Site are seismic activity, wind and dust, and heat.

3.10.1.1 Seismic Hazards

To protect the Solar Two Project from seismic risks, all design and construction will be in conformance with 2007 CBC requirements. The structural and seismic engineering design criteria to be used for the Project are included in Appendix M, Structural Engineering Design Criteria.

3.10.1.2 Wind and Dust Hazards

All buildings and facilities will be designed for the wind loads stated in the 2007 CBC, the 2007 UBC, and the 2006 IBC. The SunCatcher has been designed to withstand winds of 90 miles per hour with a 1.6 safety factor. Particular care will be exercised to control sand and dirt particulates for all occupied areas, including buildings and equipment rooms and locations. All Project facilities will be designed to minimize particulate intrusion and will utilize appropriate levels of filtration. Staging and temporary service areas will be established with particle control in mind.

The SunCatchers will be regularly washed to keep mirror surfaces free of dust buildup to optimize solar energy potential.

Fugitive dust control during Project construction and operation will be conducted using water application and/or environmentally acceptable surface treatments.

3.10.1.3 Heat Hazards

All Project buildings and support areas will be designed and constructed with climate control appropriate to the area for protection of both personnel and equipment. Climate control will be provided by air-conditioning, insulation, and natural and forced-air ventilation. Also, the solar orientation of the Project facilities and the glass and color selection will be designed to minimize the effects of solar heat gain.

3.10.1.4 Flood Hazards

A hydrology and hydraulics study was performed on the Project Site. This study yielded the initial drainage report, which is provided in Appendix N, Initial Drainage Report.

A number of well-defined washes cross the Project Site. Several of these washes convey the larger off-site flows through the culverts at I-8. Others are smaller and convey on-site runoff and eventually join with larger washes. Several areas of the site also exhibit sheet flow conditions in areas where well-defined natural channels do not exist. Flooding conditions are likely on the site

during short, intense thunderstorms. Given the small area of the on-site watershed in comparison with the much larger off-site watershed, on-site flow peaks may pass before the off-site flows reach the Project Site. Since thunderstorms typically cover small geographic areas, it is possible that localized flooding may occur in some parts of the site while other parts remain unaffected.

Localized channel grading will take place on a limited basis to improve channel hydraulics and control flow direction where buildings and roadways are proposed. The Main Services Complex will be protected from a 100-year flood by berms or channels that will direct the flow around the perimeter of the building site, if required.

Roadway dips, culverts, and Arizona crossings will be used to reduce flood hazards on roadways. The proposed east-west on-site paved arterial roadway section between the Main Services Complex and Dunaway Road will be designed as a designated evacuation route. As such, culverts for this roadway will be designed such that the roadway section shall have its driving surface constructed above the projected profile of a 25-year event.

Hydraulic analysis will be performed on the channels between the boundaries of the 2-year event and the 100-year event to determine the depth and speed of flows. This information will be used to locate SunCatchers so as to minimize scour and deposition around their foundations.

3.10.1.5 Fire Hazards

The Solar Two Project Site is located in a moderate fire hazard zone; the Project Site is outside of regions where the risk of wildland fires is considered significant.

3.10.2 Emergency Systems and Safety Precautions

This section discusses the safety precautions and the fire protection systems that Project personnel will use.

3.10.2.1 Safety Precautions

Solar Two will implement programs to ensure compliance with the requirements of federal and state occupational safety and health programs. Solar Two will also identify and implement Project-specific programs that effectively assess potential hazards and mitigate them on a routine basis.

3.10.2.2 Fire Systems

The Solar Two Project will have on-site fire-protection systems and will be supported by local fire protection services. Section 3.10.3, Fire Protection and Safety Systems, provides a detailed description of the fire protection systems.

The Project will include both portable and fixed fire suppression equipment and systems. Portable fire extinguishers will be located at strategic locations throughout the Project Site. The fixed fire protection system will provide a wet, water-based sprinkler fire-suppression system for the buildings.

Employees will be given fire safety training, including instruction in fire prevention, the use of portable fire extinguishers and hose stations, and the reporting of fires to the local fire department. Employees will only attempt to suppress fires in their incipient phase. Fire drills will be conducted at least twice each year for each work area.

The El Centro Fire Department Prevention Division is located at 900 South Dogwood, El Centro, California; it has an estimated response time of 20 to 30 minutes to the Project Site. The El Centro Fire Department Prevention Division will provide primary fire protection, firefighting, and emergency response services to the Solar Two Project Site. The El Centro Fire Chief will perform a fire safety inspection on completion of Project construction and thereafter will conduct periodic fire safety inspections and training for Solar Two Project employees. Before Project start-up, Solar Two will request that the El Centro Fire Department visit the Project Site to become familiar with the site and with Project emergency response procedures.

3.10.3 Fire Protection and Safety Systems

The Project fire protection and safety systems will be designed to limit personnel injury, property loss, and Project downtime as a result of fire or other event. The systems will be designed in accordance with:

- federal, state, and local fire codes, occupational health and safety regulations, and other jurisdictional requirements,
- the CBC, and
- NFPA standard practices.

Table 3-20, Fire Protection Systems Design Conditions, provides a summary of the design conditions of the Solar Two Project fire protection systems. The following sections describe the Project fire protection and safety systems.

Table 3-20
Fire Protection Systems Design Conditions

Location	Type of System
Buildings	Automatic Clean Agent System per NFPA 2001 for Control Room, wet/dry/pre-action sprinkler system for administrative areas, maintenance area, assembly bays, and offices. Fire water supply will be from the demineralized water contained in 175,000-gallon storage tank treated from water provided by the Imperial Irrigation District canal located 5 miles east of the Solar Two Project main buildings. Note: The fixed fire systems in the buildings will be provided as required by local jurisdiction or the UBC. Hose stations and portable extinguishers will be provided throughout buildings as required by code. Detection system and fire alarm pull stations will be provided for the Control Room. Pull stations shall be located in buildings as required by code.
SunCatchers	SunCatchers require no fire protection, are of non-combustible design and require no combustion for the generation of electricity. Maintenance service vehicles will be equipped with appropriate portable fire extinguishers.

Table 3-20
Fire Protection Systems Design Conditions

Location	Type of System
Water treatment area	An automatic wet pipe sprinkler system, portable "BC" rated fire extinguishers in all areas and hose reel stations with 100-foot hose in the area.
Service complex areas	Wet barrel type fire hydrants will be designed, installed and located as per NFPA 24 and as required per local jurisdiction. The location of hydrants will not be more than 300 feet apart in all outside areas as required by code.

Source: SES Solar Two, LLC, 2008.
Notes:
CO_2 = carbon dioxide
NFPA = National Fire Protection Association
UBC = Uniform Building Code

3.10.3.1 Fire Water System

The fire water supply and pumping system will provide an adequate quantity of firefighting water to yard hydrants, hose stations, and fire sprinkler systems. The system will be capable of supplying maximum water demand for any fire protection requirements, as per applicable LORS.

The Solar Two Project fire water system will consist of a water storage tank, a diesel fire water pump, yard hydrants, fire risers, and fire sprinkler systems within the buildings. The fire water pump, located at the Main Services Complex, will be sized in conjunction with a potable water storage tank. The potable and fire flow water will be stored in an aboveground steel tank with supply and fire flow pumps sized to handle the specific demands. The water in the fire flow and potable fire flow tank will be chlorinated and circulated to keep it fresh. The fire distribution system will need to be flushed periodically to keep water fresh and free from algae growth.

The demineralized water storage tank will be supplied from the demineralized water treatment system, which will be located in the water treatment structure next to the tank. Water will be supplied to the water treatment system from a second 175,000-gallon raw water storage tank. The raw water will be supplied from an underground water supply pipeline from the IID Westside Main Canal, which is located approximately 2 miles east of Dunaway Road.

The demineralized water storage tank will be sized to store the minimum requirement for domestic water, building fire-suppression water, and storage capacity for SunCatcher mirror washing. The design of the storage tank piping will prevent the mirror washing activities from drawing down the water in the storage tank to a level below the minimum requirement for the Project's fire-suppression water system. The diesel-driven fire water pump and controller will be interfaced with the building fire alarms and fire sprinkler systems to run on reduced pressure during fire flow events. An electric-driven fire water jockey pump will maintain water pressure in the fire sprinkler system within the Project facilities and support areas. The diesel-driven pump will start automatically if the pressure in the fire water loop drops below a lower set point. Automatic valves will open to draw water from the demineralized water storage tank if pressure falls below a lower set point. The fire water pump will run until manually stopped. The fire water pump will be installed in accordance with NFPA 20.

3.10.3.2 Fixed Fire Protection Systems

The fixed fire protection system for Project facilities will be a traditional wet system design that provides coverage and protection within the occupied facilities and the surrounding outside non-occupied support areas. The water treatment, administration, maintenance, and assembly buildings will be provided with a fire sprinkler system design that includes fire riser(s) with the required fire inspection and testing valves, instrumentation and monitoring. The fire sprinkler system design will be consistent with UBC/IBC Type II-N facilities construction and applicable LORS.

Automatic fire suppression systems will be provided in the control rooms and electrical equipment rooms.

The non-occupied support areas, including the vehicle fueling station, will be provided with a standpipe and hose fire protection design. The hydrogen k-bottle storage area may be provided with a permanent wet fire sprinkler system design consistent with the design of hydrogen gas storage facilities.

The following standards and good engineering practices will be considered in the design of the fire protection systems:

- NFPA 13, Standard for the Installation of Sprinkler Systems (2007 Edition),
- NFPA 14, Standard for the Installation of Standpipe and Hose Systems (2007 Edition),
- NFPA 20, Standard for the Installation of Stationary Pumps for Fire Protection,
- NFPA 22, Standard for Water Tanks for Private Fire Protection,
- NFPA 24, Standard for the Installation of Private Fire Service Mains and Their Appurtenances,
- NFPA 25, Standard for the Inspection, Testing, and Maintenance of Water-Based Fire Protection Systems,
- NFPA 30A, Code for Motor Fuel Dispensing Facilities and Repair Garages, and
- NFPA 55, Standard for the Storage, Use, and Handling of Compressed Gases and Cryogenic Fluids in Portable and Stationary Containers, Cylinders, and Tanks.

3.10.3.3 Fire Alarm and Detection

Permanently installed fire alarm detection systems will be provided and designed in accordance with the National Electrical Code (NFPA 70) and NFPA 72. Pull stations will be provided as well as audible and visible annunciation throughout the Project facilities in a zone addressable system; the main monitoring consoles will be located in the Project control rooms. Heat and smoke detectors will also be designed into the zone addressable system. A pre-action fire suppression control system will be provided for the control rooms and related information technology equipment support areas.

3.10.3.4 Portable Extinguishers

Portable hand fire extinguishers (e.g., carbon dioxide and dry-chemical) will be placed throughout the Project buildings and support areas in accordance with the requirements and guidelines of NFPA 10.

3.10.3.5 Miscellaneous Fire Safety Items

The design and construction of all building and support areas will be free of asbestos and will meet all code and risk management requirements for low toxicity and particulate expulsion during combustion. Both Project construction and Project operations management and personnel will coordinate and work closely with the local fire marshal, fire department, and related emergency response agencies regarding operating and emergency response procedures.

3.10.3.6 Safety Fixtures

Safety showers and emergency eye wash stations will be provided at all Project buildings and support areas that store or use chemicals, including the assembly and maintenance buildings, the water treatment building, the vehicle fueling area, and the hydrogen storage area. A first aid station, complete with all emergency medical supplies, will be provided in the operation and administration building near the break room. Also, all Project construction and operation and maintenance vehicles will be equipped with complete first aid kits and two-way radios. The locations of the safety showers and emergency eye wash stations are illustrated in the following figures:

- Figure 3-44, Main Services Complex Plumbing Site Plan – Part A,
- Figure 3-45, Main Services Complex Plumbing Site Plan – Part B, and
- Figure 3-46, Main Services Complex Plumbing Site Plan – Part C.

3.10.3.7 Fire and Explosion Risks

Three types of hazardous, highly flammable, or explosive materials will be used at the Project Site during operations: hydrogen gas, oxygen and acetylene welding gases, and gasoline fuel for the operations vehicles. Two other flammable materials that are difficult to ignite will also be used at the site during Project operations: transformer insulating oil and diesel fuels for the operations vehicles.

Gasoline is a Type 1B flammable liquid and is considered a severe fire hazard. Gasoline vapor is heavier than air. Vapor or gases may be ignited by distant ignition sources and flash back. To mitigate the fire and explosion risks, the gasoline storage tank shall have emergency relief venting in the form of construction or a device or devices that will relieve excessive internal pressure caused by an exposure fire.

The gasoline and diesel fuels will be stored in two sets of 5,000-gallon tanks located north of the maintenance building and west of the evaporation pond at the Main Services Complex.

Gasoline and diesel fuel tanks will be located away from electrical lines and other potential ignition sources. The fuel tanks will be provided with dikes and/or a fire wall capable of containing the volume of the largest tank. These tanks will be installed in a way that the exterior surface, including the bottom of the tank and connection piping, can be directly monitored and directly viewed, which are requirements of the CCR (26 CCR Division 9 Title 14, Toxic Tank Settings), to prevent damage to natural resources in the case of a spill. The 2001 California Fire Code has additional requirements, which will be described in Section 5.15, Hazardous Materials Handling.

The storage tanks for gasoline and diesel fuel will be protected from vehicular and other impacts by bollards constructed of steel pipe filled with concrete and set in concrete or equivalent.

Hydrogen, a flammable gas, will be used in the PCU Solar Stirling Engine as a working fluid, not as a combustion fuel. A maximum of 100 k-bottles of hydrogen may be stored at the Main Services Complex at any one time to provide for maintenance replacement and make-up consumption of hydrogen by the PCU Solar Stirling Engine. The gas will be in approved individual gas cylinders (k-bottles) supplied by an approved hydrogen gas supplier. The cylinders will be stored outside, near the Main Services Complex, away from electrical lines and other potential ignition sources, as required by the applicable LORS. Cylinders will be stored upright, chained to a supporting structure, and protected from vehicular and other impacts by bollards constructed of steel pipe filled with concrete and set in concrete or equivalent.

The potential fire or explosion risks for hydrogen storage and use for SunCatchers are not significant. Hydrogen gas will be only used outdoors in well-ventilated open areas. Thus, any hydrogen gas will dissipate to the atmosphere, thus mitigating the potential fire and explosion risk. Further details on the storage, use, and handling of hydrogen gas are outlined in Appendix K, Hydrogen System Design Criteria.

Other gases to be stored and used at the Project Site may include shop welding gases for maintenance activities. Typical welding gases are oxygen and acetylene. The potential effects of the use of these gases at the Project Site do not appear to be significant based on the following items.

- A limited quantity of each gas will be stored at Project facilities (a maximum of 6 to 10 bottles of these gases will be stored at the Main Services Complex.
- The gases will be stored in U.S. Department of Transportation–approved safety cylinders under Department of Transportation rules and regulations and will be secured to prevent upset and physical damage and to facilitate inventory control.
- Incompatible gases (e.g., flammable gases and oxidizers) will be stored separately.
- The gases will be stored in multiple standard-sized portable cylinders (in contrast to larger cylinders), generally limiting the quantity of gas released from an individual cylinder failure to less than 200 cubic feet.

Transformer oil will not be stored on-site except in the transformers. Nearly the only risk of a transformer oil fire would be the unlikely event of a catastrophic transformer failure. This event would require an emergency response from the El Centro Fire Department.

3.11 PROJECT RELIABILITY

This section discusses the expected Project availability, equipment redundancy, the reliability of the water supply, and Project quality control measures.

3.11.1 Project Availability

The Solar Two Project has a designed operating life of 40 years and is capable approximately 3,500 hours of annual electricity production, with a projected annual availability of approximately 99 percent while on-sun. The annual net energy to be produced by the Project is estimated to be approximately 1,620,000 MWh/year at full build-out.

The SunCatcher generates "as available" electricity, depending on cloud cover and wind conditions. The Project is a peaking resource, generating more power in the highest solar insolation of the day (afternoons) when the solar energy input is the highest (over 1,000 W/m^2). Of all solar technologies, the SunCatcher can operate with the least amount of solar input and can recover more quickly when clouds pass over the site. Winds greater than 35 miles per hour will require the SunCatcher to shut down into a safe stow position, and cloud cover and the times of sunrise and sunset affect the SunCatcher power generating capability.

Reliability and availability projections are based on a 40-year operating life. Operations and maintenance procedures will be consistent with industry standard practices to maintain the useful life of all Project equipment.

3.11.2 Redundancy of Critical Components

The Solar Two Project will utilize approximately 30,000 independent SunCatchers to produce 750 MW of capacity. As a result, the Project has a high level of designed redundancy. A single SunCatcher shutdown will have a negligible effect on the overall power-generating capacity of the Project.

The solar field is grouped in 1.5-MW blocks of 60 SunCatchers each. Each block has an electrical collection system and a GSU transformer. The Project will have 500 of these blocks when the Project is fully built out, so the loss of a single GSU or underground feeder will result in the loss of only 0.2 percent of the total power output of the Project.

At the substation level, there are five power transformers, each collecting power from 150 MW of the Project. The loss of one transformer will reduce the normal capacity of the Project by 20 percent; however, the remaining transformers will be capable of carrying the full output of the Project indefinitely under favorable thermal conditions, and even under adverse thermal conditions (55 degrees Celsius ambient temperature) can carry the full output of the Project for up to 8 hours, followed by a resting period of at least 8 hours.

The interconnection transmission line is a double-circuit line. If one circuit is lost to service, the entire output of the Project can be transmitted to the grid on the remaining line for up to 24 hours in a 55 degrees Celsius ambient temperature. Most transmission line outages can be repaired within that time frame.

3.11.3 Reliability of Water Supply

On-site storage capability will be sufficient for 2 to 3 days of operation without degradation and will also be able to accommodate maintenance on of the water delivery system and the treatment needs of the equipment. However, in the event that the underground water supply pipeline from the Westside Main Canal is temporarily unable to meet Project water supply requirements, IID water will need to be transported to the Project Site from the surrounding area. During such an event, two or three large tanker trucks per day would be sufficient to sustain operations. See Section 5.5, Water Resources, for additional information.

The SunCatchers require no water in the generation of electricity. Water will be used solely for washing dust build-up from SunCatcher mirror assemblies and in the cooling system on the PCU of each SunCatcher. Water from the IID Westside Main Canal, which is located 2 miles east of Dunaway Road, will be pumped via an underground water supply pipeline to a 175,000-gallon raw water storage tank. The raw water storage tank will provide water for the demineralizing process, and the demineralized water will be stored in a second 175,000-gallon tank for both fire-suppression water and SunCatcher mirror-washing water. The demineralized water tank will contain a 2- to 3-day supply of mirror-washing water and will be designed to maintain a constant supply of fire-protection water unavailable for mirror washing.

3.11.4 Project Quality Control

The objective of the Project quality control program is to ensure that all systems, equipment, and components have the appropriate quality measures applied during design, procurement, fabrication, construction, and operation of the Project. High levels of safety, constructability, reliability, availability, operability, and maintainability are the goal of the quality control program.

The required quality for a system will be ensured by the application of controls to various Project activities. The appropriate controls will be determined by the specific activity. Design activity controls will include checking and review, and manufacturing and construction controls will employ inspection and testing.

For quality assurance planning purposes, the Project activities have been divided into the following phases that apply to specific periods of time during the Project.

- **Conceptual Design:** activities such as definition of requirements and engineering analyses.
- **Detail Design:** activities such as the preparation of calculations, drawings, and lists needed to describe, illustrate, or define systems, structures, or components.
- **Procurement Specifications:** activities necessary to compile and document the contractual, technical, and quality provisions for procurement specifications for Project systems, components, or services.
- **Manufacturers' Control and Surveillance:** activities necessary to ensure that the manufacturers conform to the provisions of the procurement specifications.
- **Manufacturer Data Review:** activities required to review manufacturers' drawings, data, instructions, procedures, plans, and other documents to ensure coordination of Project systems and components and conformance to procurement specifications.

- **Receipt Inspection:** inspection and review of product at the time of delivery to the construction site.
- **Construction/Installation:** inspection and review of storage, installation, cleaning, and initial testing of systems, subsystems, or components at the Project Site.
- **System/Component Testing:** actual operation of Project components in a system in a controlled manner to ensure that the performance of systems and components conform to specified requirements.
- **Project Operation:** actual Project operation by Solar Two.

As the Project progresses, the design, procurement, fabrication, erection, and commissioning of each Project component, subsystem, and system will progress through the nine phases defined above.

The following quality control record system will be maintained and used for review and reference:

- Project equipment/vendor instruction manuals,
- system design calculations and drawings,
- Project design manual,
- quality assurance audit reports,
- inspection and equipment testing reports,
- conformance to construction records and drawings,
- equipment procurement specifications (contract issue and change orders),
- purchase orders and change orders, and
- Project correspondence.

For procured component purchase orders, a list of qualified suppliers and subcontractors will be developed. Before contracts are awarded, the subcontractors' capabilities and experience will be evaluated. The evaluation will consider suppliers' and subcontractors' personnel, production capability, past experience and performance, seismic experience, and quality assurance program.

During construction, the following field activities will be conducted:

- inspections of equipment/components as they are received,
- construction/installation of equipment,
- system/component testing, and
- Project startup and commissioning.

The construction contractor will be contractually responsible for performing the work in accordance with all safety, environmental, and quality requirements specified by applicable LORS and the Solar Two Project contract.

The subcontractors' compliance with the Project quality requirements will be monitored through inspections, audits, and administration of independent testing contracts.

3.12 PROJECT CLOSURE

3.12.1 Introduction

Project closure can be temporary or permanent. Temporary closure is defined as a shutdown for a period exceeding the time required for normal maintenance, including closure for overhaul or replacement of the major components, such as major transformers, switchgear, etc. Causes for temporary closure include inclement weather and/or natural hazards (e.g., winds in excess of 35 mph, or cloudy conditions limiting solar insolation values to below the minimum solar insolation required for positive power generation, etc.), or damage to the Project from earthquake, fire, storm, or other natural acts. Permanent closure is defined as a cessation in operations with no intent to restart operations owing to Project age, damage to the Project that is beyond repair, adverse economic conditions, or other significant reasons.

3.12.2 Temporary Closure

In the unforeseen event that the Project is temporarily closed, a contingency plan for the temporary cessation of operations will be implemented. The contingency plan will be followed to ensure conformance with applicable LORS and to protect public health, safety, and the environment. The plan, depending on the expected duration of the shutdown, may include the draining of chemicals from storage tanks and other equipment and the safe shutdown of equipment. Wastes will be disposed of according to applicable LORS, as discussed in Section 3.8.4, Management and Disposal of Hazardous Materials, and in Section 5.14, Waste Management.

3.12.3 Permanent Closure

The planned life of the Solar Two Project is 40 years; however, if the Project is still economically viable, it could be operated longer. It is also possible that the Project could become economically noncompetitive before 40 years have passed, forcing early decommissioning. Whenever the Project is permanently closed, the closure procedure will follow a plan that will be developed as described below.

The removal of the Project from service, or decommissioning, may range from “mothballing” to the removal of equipment and appurtenant facilities, depending on conditions at the time. Because the conditions that would affect the decommissioning decision are largely unknown at this time, these conditions would be presented to the CEC, the BLM, and other applicable agencies.

To ensure that public health, safety, and the environment are protected during decommissioning, a decommissioning plan will be submitted to the CEC for approval before decommissioning. The plan will discuss the following:

- proposed decommissioning activities for the Project and appurtenant facilities constructed as part of the Project,
- conformance of the proposed decommissioning activities with applicable LORS and local/regional plans,

- activities necessary to restore the Project Site if the plan requires removal of equipment and appurtenant facilities,
- decommissioning alternatives other than complete restoration to the original condition, and
- associated costs of the proposed decommissioning and the source of funds to pay for the decommissioning.

In general, the decommissioning plan for the Project will attempt to maximize the recycling of Project components. Solar Two will attempt to sell unused chemicals back to the suppliers or other purchasers or users. Equipment containing chemicals will be drained and shut down to ensure public health and safety and to protect the environment. Nonhazardous wastes will be collected and disposed of in appropriate landfills or waste collection facilities. Hazardous wastes will be disposed of according to applicable LORS. The site will be secured 24 hours per day during the decommissioning activities, and Solar Two will provide periodic update reports to the CEC, the BLM, and other appropriate parties.

3.13 LAWS, ORDINANCES, REGULATIONS, AND STANDARDS

The applicable LORS for each engineering discipline are included as part of the engineering design criteria appendices (see Appendix O, Civil Engineering and Civil Design; Appendix M, Structural Engineering Design Criteria; Appendix F, Mechanical and Fire Protection Engineering Design Criteria; Appendix P, Electrical Engineering Design Criteria; Appendix Q, Control Systems Engineering Design Criteria; Appendix R, Fuel Handling Design Criteria; Appendix S, Material Safety/Equipment; Appendix K, Hydrogen System Design Criteria; and Appendix T, Phase I Environmental Site Assessment).

3.14 REFERENCES

California EMF Consensus Group. 1992. Issues and Recommendations for Interim Response and Policy Regarding Power Frequency EMFs. March 20.

CPUC (California Public Utilities Commission). 1991. Order Instituting Investigation. CPUC I.91-01-012.

EPRI (Electric Power Research Institute). 1975. Transmission Line Reference Book, 345kV and Above.

_____. 1983. Transmission Line Reference Book, 345kV and Above.

IID (Imperial Irrigation District). 2005. IID Westside Main Canal Water Quality Report.

SES Solar Two, LLC. 2008. *Project Description and Plan of Development.*

Adequacy Issue:	Adequate		Inadequate		DATA ADEQUACY WORKSHEET		Revision No.	0	Date	
Technical Area:	**Efficiency**				Project:	Solar Two Project		Technical Staff:		
Project Manager:					Docket:			Technical Senior:		

Siting Regulations	**Information**	**AFC Section Number**	**Adequate Yes Or No**	**Information Required To Make AFC Conform With Regulations**
Appendix B (g) (1)	...provide a discussion of the existing site conditions, the expected direct, indirect and cumulative impacts due to the construction, operation and maintenance of the Project, the measures proposed to mitigate adverse environmental impacts of the Project, the effectiveness of the proposed measures, and any monitoring plans proposed to verify the effectiveness of the mitigation.	Section 3.3.1 Section 3.5.7 Section 3.5.9		
Appendix B (h) (4) (A)	Heat and mass balance diagrams for design conditions for each mode of operation.	N/A		
Appendix B (h) (4) (B)	Annual fuel consumption in BTUs for each mode of operation, including hot restarts and cold starts.	Section 3.4.4.1		
Appendix B (h) (4) (C)	Annual net electrical energy produced in MWh for each mode of operation including starts and shutdowns.	Section 3.11.1		
Appendix B (h) (4) (D)	Number of hours the plant will be operated in each design condition in each year.	Section 3.11.1		
Appendix B (h) (4) (E)	If the Project will be a cogeneration facility, calculations showing compliance with applicable efficiency and operating standards.	N/A		
Appendix B (h) (4) (F)	A discussion of alternative generating technologies available for the Project, including the projected efficiency of each, and an explanation why the chosen equipment was selected over these alternatives.	Section 3.1 Section 4.0		

Adequacy Issue:	Adequate		Inadequate		DATA ADEQUACY WORKSHEET		Revision No.	0	Date	
Technical Area:	**Efficiency**				Project:	Solar Two Project		Technical Staff:		
Project Manager:					Docket:			Technical Senior:		
Siting Regulations	**Information**				**AFC Section Number**		**Adequate Yes Or No**	**Information Required To Make AFC Conform With Regulations**		
Appendix B (i) (1) (A)	Tables which identify laws, regulations, ordinances, standards, adopted local, regional, state, and federal land use plans, leases, and permits applicable to the proposed Project, and a discussion of the applicability of, and conformance with each. The table or matrix shall explicitly reference pages in the application wherein conformance, with each law or standard during both construction and operation of the facility is discussed; and				Section 3.6.2 Section 3.13 Appendix F, Mechanical and Fire Protection Engineering Design Criteria Appendix K, Hydrogen System Design Criteria Appendix L, Hazardous Materials Handling Appendix M, Structural Engineering Design Criteria Appendix O, Civil Engineering and Civil Design Appendix P, Electrical Engineering Design Criteria Appendix Q, Control Systems Engineering Design Criteria Appendix R, Fuel Handling Design Criteria					
Appendix B (i) (1) (B)	Tables which identify each agency with jurisdiction to issue applicable permits, leases, and approvals or to enforce identified laws, regulations, standards, and adopted local, regional, state and federal land use plans, and agencies which would have permit approval or enforcement authority, but for the exclusive authority of the commission to certify sites and related facilities.				N/A					

Adequacy Issue:	Adequate		Inadequate		DATA ADEQUACY WORKSHEET		Revision No.	0	Date	
Technical Area:	**Efficiency**				Project:	Solar Two Project		Technical Staff:		
Project Manager:					Docket:			Technical Senior:		

Siting Regulations	Information	AFC Section Number	Adequate Yes Or No	Information Required To Make AFC Conform With Regulations
Appendix B (i) (2)	The name, title, phone number, address (required), and email address (if known), of an official who was contacted within each agency, and also provide the name of the official who will serve as a contact person for Commission staff.	Section 5.0		
Appendix B (i) (3)	A schedule indicating when permits outside the authority of the commission will be obtained and the steps the applicant has taken or plans to take to obtain such permits.	N/A		
Appendix B (h) (1) (A)	A description of the site conditions and investigations or studies conducted to determine the site conditions used as the basis for developing design criteria. The descriptions shall include, but not be limited to, seismic and other geologic hazards, adverse conditions that could affect the Project's foundation, adverse meteorological and climatic conditions, and flooding hazards, if applicable.	Section 3.3.2 Section 3.4.2 Section 3.10.1.4 Table 3-1 Table 3-2		
Appendix B (h) (1) (B)	A discussion of any measures proposed to improve adverse site conditions.	Section 3.5.9 Section 3.10		
Appendix B (h) (1) (C)	A description of the proposed foundation types, design criteria (including derivation), analytical techniques, assumptions, loading conditions, and loading combinations to be used in the design of facility structures and major mechanical and electrical equipment	Section 3.4.4.2 Section 3.5.6 Section 3.6.1 Section 3.9.5		

Adequacy Issue:	Adequate		Inadequate		DATA ADEQUACY WORKSHEET		Revision No.	0	Date	
Technical Area:	**Efficiency**				Project:	Solar Two Project		Technical Staff:		
Project Manager:					Docket:			Technical Senior:		
Siting Regulations	**Information**				**AFC Section Number**		**Adequate Yes Or No**	**Information Required To Make AFC Conform With Regulations**		
Appendix B (h) (1) (D)	For each of the following facilities and/or systems, provide a description including drawings, dimensions, surface-area requirements, typical operating data, and performance and design criteria for protection from impacts due to adverse site conditions:									
Appendix B (h) (1) (D) (i)	The power generation system;				Section 3.4.4 Figure 3-1 Figure 3-2 Figure 3-3 Figure 3-11 Figure 3-12 Figure 3-13 Figure 3-14 Figure 3-15 Figure 3-16					
Appendix B (h) (1) (D) (ii)	The heat dissipation system;				Section 3.4.4.2					
Appendix B (h) (1) (D) (iii)	The cooling water supply system, and, where applicable, pre-plant treatment procedures;				Section 3.5.10 Section 3.7 Appendix J, Water Balance Flow Diagrams					
Appendix B (h) (1) (D) (iv)	The atmospheric emission control system;				N/A					
Appendix B (h) (1) (D) (v)	The waste disposal system and on-site disposal sites;				Section 3.8 Table 3-9 Table 3-10					
Appendix B (h) (1) (D) (vi)	The noise emission abatement system;				Section 3.6.2.4					
Appendix B (h) (1) (D) (vii)	The geothermal resource conveyance and re-injection lines (if applicable);				N/A					

Adequacy Issue:	Adequate		Inadequate		DATA ADEQUACY WORKSHEET		Revision No.	0	Date	
Technical Area:	**Efficiency**				Project:	Solar Two Project		Technical Staff:		
Project Manager:					Docket:			Technical Senior:		
Siting Regulations	**Information**				**AFC Section Number**		**Adequate Yes Or No**	**Information Required To Make AFC Conform With Regulations**		
Appendix B (h) (1) (D) (viii)	Switchyards/transformer systems; and				Section 3.6 Figure 3-32 Figure 3-33 Figure 3-34 Figure 3-35 Figure 3-36 Figure 3-37					
Appendix B (h) (1) (D) (ix)	Other significant facilities, structures, or system components proposed by the applicant.				Table 3-1 Table 3-2					
Appendix B (g) (1)	...provide a discussion of the existing site conditions, the expected direct, indirect and cumulative impacts due to the construction, operation and maintenance of the Project, the measures proposed to mitigate adverse environmental impacts of the Project, the effectiveness of the proposed measures, and any monitoring plans proposed to verify the effectiveness of the mitigation.				N/A					
Appendix B (b) (3)	Applications for geothermal facilities shall contain the following additional information:				N/A					
Appendix B (b) (3) (A)	Maps at a scale of 1:24,000 (or appropriate map scale agreed to by staff) showing the location of the geothermal leaseholds, along with a description by section, township, range, county, and assessor's parcel numbers of the leaseholds;				N/A					
Appendix B (b) (3) (B)	Full-page color photographic reproductions of the geothermal leaseholds;				N/A					

Adequacy Issue:	Adequate		Inadequate		DATA ADEQUACY WORKSHEET		Revision No.	0	Date	
Technical Area:	**Efficiency**				Project:	Solar Two Project		Technical Staff:		
Project Manager:					Docket:			Technical Senior:		

Siting Regulations	**Information**	**AFC Section Number**	**Adequate Yes Or No**	**Information Required To Make AFC Conform With Regulations**
Appendix B (b) (3) (C)	A description of the process by which the geothermal leasehold was selected and the consideration given to engineering constraints, site geology, environmental impacts, water, steam, waste and fuel constraints, electric transmission constraints, and any other factors considered by the applicant. Include references to any environmental documents which address steam field development;	N/A		
Appendix B (b) (3) (D)	A detailed description of the type, quality, and characteristics of the geothermal resource, including pressure and temperature flow rates, constituents and concentrations of non-condensable gases, and constituent concentrations of dissolved solids, and descriptions and concentrations of any substances potentially harmful to public health and safety or to the environment;	N/A		
Appendix B (b) (3) (E)	Proposed locations of production and re-injection wells for the Project. Include the applicant's assessment of geothermal resource adequacy, including the production history of those wells within the leaseholds dedicate to the Project, including pressure decline curves as available; and	N/A		
Appendix B (b) (3) (F)	A discussion of the potential impacts on the temperature, mineral content, and rate of flow of thermal springs affected by the Project.	N/A		

Adequacy Issue:	Adequate		Inadequate		DATA ADEQUACY WORKSHEET		Revision No.	0	Date	
Technical Area:	**Efficiency**				Project:	Solar Two Project		Technical Staff:		
Project Manager:					Docket:			Technical Senior:		

Siting Regulations	Information	AFC Section Number	Adequate Yes Or No	Information Required To Make AFC Conform With Regulations
Appendix B (i) (1) (A)	Tables which identify laws, regulations, ordinances, standards, adopted local, regional, state, and federal land use plans, leases, and permits applicable to the proposed Project, and a discussion of the applicability of, and conformance with each. The table or matrix shall explicitly reference pages in the application wherein conformance, with each law or standard during both construction and operation of the facility is discussed; and	N/A		
Appendix B (i) (1) (B)	Tables which identify each agency with jurisdiction to issue applicable permits, leases, and approvals or to enforce identified laws, regulations, standards, and adopted local, regional, state and federal land use plans, and agencies which would have permit approval or enforcement authority, but for the exclusive authority of the commission to certify sites and related facilities.	N/A		
Appendix B (i) (2)	The name, title, phone number, address (required), and email address (if known), of an official who was contacted within each agency, and also provide the name of the official who will serve as a contact person for Commission staff.	N/A		
Appendix B (i) (3)	A schedule indicating when permits outside the authority of the commission will be obtained and the steps the applicant has taken or plans to take to obtain such permits.	N/A		
Cal. Code Regs., title 20, § 1704, (a) (3) (A)	Descriptions of all significant assumptions, methodologies, and computational methods used in arriving at conclusions in the document.	Throughout the AFC		

Adequacy Issue:	Adequate		Inadequate		DATA ADEQUACY WORKSHEET		Revision No.	0	Date	
Technical Area:	**Efficiency**				Project:	Solar Two Project		Technical Staff:		
Project Manager:					Docket:			Technical Senior:		
Siting Regulations	**Information**				**AFC Section Number**		**Adequate Yes Or No**	**Information Required To Make AFC Conform With Regulations**		
Cal. Code Regs., title 20, § 1704, (a) (3) (B)	Descriptions, including methodologies and findings, of all major studies or research efforts undertaken and relied upon to provide information for the document; and a description of ongoing research of significance to the Project (including expected completion dates; and				Throughout the AFC					
Cal. Code Regs., title 20, § 1704, (a) (3) (C)	A list of all literature relied upon or referenced in the documents, along with brief discussions of the relevance of each such reference				Throughout the AFC					
Cal. Code Regs., title 20, § 1704, (a) (4)	Each principal subject area covered in a notice or application shall be set forth in a separate chapter or section, each of which shall identify the person or persons responsible for its preparation.				Section 7.0					

Adequacy Issue:	Adequate		Inadequate		DATA ADEQUACY WORKSHEET		Revision No.	0	Date	
Technical Area:	**Efficiency**				Project:	Solar Two Project		Technical Staff:		
Project Manager:					Docket:			Technical Senior:		
Siting Regulations	**Information**				**AFC Section Number**		**Adequate Yes Or No**	**Information Required To Make AFC Conform With Regulations**		
Appendix B (a) (1) (A)	A general description of the proposed site and related facilities, including the location of the site or transmission routes, the type, size and capacity of the generating or transmission facilities, fuel characteristics, fuel supply routes and facilities, water supply routes and facilities, pollution control systems, and other general characteristics.				Section 3.4 Figure 3-1 Figure 3-2 Figure 3-3 Figure 3-10B Figure 3-11 Figure 3-12 Figure 3-14 Figure 3-24 Figure 3-25 Figure 3-26 Figure 3-27 Figure 3-29 Figure 3-30 Figure 3-31 Figure 3-35 Figure 3-36 Figure 3-37 Figure 3-42 Figure 3-43					
Appendix B (a) (1) (B)	Identification of the location of the proposed site and related facilities by section, township, range, county and assessor's parcel numbers.				Section 3.2 Section 5.9 Figure 3-3					
Appendix B (a) (1) (C)	A description of and maps depicting the region, the vicinity, and the site and its immediate surroundings.				Section 3.2 Figure 1-1 Figure 1-2 Figure 3-3					

Adequacy Issue:	Adequate		Inadequate		DATA ADEQUACY WORKSHEET		Revision No.	0	Date	
Technical Area:	**Efficiency**				Project:	Solar Two Project		Technical Staff:		
Project Manager:					Docket:			Technical Senior:		
Siting Regulations	**Information**				**AFC Section Number**		**Adequate Yes Or No**	**Information Required To Make AFC Conform With Regulations**		
Appendix B (a) (1) (D)	A full-page color photographic reproduction depicting the visual appearance of the site prior to construction, and a full-page color simulation or artist's rendering of the site and all Project components at the site, after construction.				Figure 3-10A Figure 3-10B Figure 3-10C					
Appendix B (a) (1) (E)	In an appendix to the application, a list of current assessor's parcel numbers and owners' names and addresses for all parcels within 500 feet of the proposed transmission line and other linear facilities, and within 1,000 feet of the proposed power plant and related facilities.				Section 5.9 Appendix C, Property Owners Within 1,000 Feet of Project Site					
Appendix B (a) (2)	Project Schedule: Proposed dates of initiation and completion of construction, initial start-up, and full-scale operation of the proposed facilities.				Table 3-14					
Appendix B (a) (3) (A)	A list of all owners and operators of the site(s), the power plant facilities, and, if applicable, thermal host, the geothermal leasehold, the geothermal resource conveyance lines, and the geothermal re-injection system, and a description of their legal interest in these facilities.				Section 1.4 Section 3.1					
Appendix B (a) (3) (B)	A list of all owners and operators of the proposed electric transmission facilities.				Section 1.4 Section 3.1					
Appendix B (a) (3) (C)	A description of the legal relationship between the applicant and each of the persons or entities specified in subsections (a)(3)(A) and (B).				Section 1.4 Section 3.1					
Appendix B (b) (1)	In a section entitled, "Generation Facility Description, Design, and Operation" provide the following information:									

Adequacy Issue:	Adequate		Inadequate		DATA ADEQUACY WORKSHEET		Revision No.	0	Date	
Technical Area:	**Efficiency**				Project:	Solar Two Project		Technical Staff:		
Project Manager:					Docket:			Technical Senior:		

Siting Regulations	Information	AFC Section Number	Adequate Yes Or No	Information Required To Make AFC Conform With Regulations
Appendix B (b) (1) (A)	Maps at a scale of 1:24,000 (1" = 2000'), (or appropriate map scale agreed to by staff) along with an identification of the dedicated leaseholds by section, township, range, county, and county assessor's parcel number, showing the proposed final locations and layout of the power plant and all related facilities;	Figure 1-1 Figure 1-2 Figure 1-3 Figure 3-1 Figure 3-2 Figure 3-3 Figure 5.9-3		
Appendix B (b) (1) (B)	Scale plan and elevation drawings depicting the relative size and location of the power plant and all related facilities to establish the accuracy of the photo simulations required in Sections (a)(1)(D) and (g)(6)(F);	Figure 3-1 Figure 3-2 Figure 3-3 Figure 3-11 Figure 3-12 Figure 3-13 Figure 3-14		
Appendix B (b) (1) (C)	A detailed description of the design, construction and operation of the facilities, specifically including the power generation, cooling, water supply and treatment, waste handling and control, pollution control, fuel handling, and safety, emergency and auxiliary systems, and fuel types and fuel use scenarios; and	Section 3.4 Section 3.5 Section 3.7 Section 3.8		
Appendix B (b) (1) (D)	A description of how the site and related facilities were selected and the consideration given to engineering constraints, site geology, environmental impacts water, waste and fuel constraints, electric transmission constraints, and any other factors considered by the applicant.	Section 4.2.1		
Appendix B (b) (2)	In a section entitled, "Transmission Lines Description, Design, and Operation" provide the following information:			

Adequacy Issue:	Adequate		Inadequate		DATA ADEQUACY WORKSHEET		Revision No.	0	Date	
Technical Area:	**Efficiency**				Project:	Solar Two Project		Technical Staff:		
Project Manager:					Docket:			Technical Senior:		
Siting Regulations	**Information**				**AFC Section Number**		**Adequate Yes Or No**	**Information Required To Make AFC Conform With Regulations**		
Appendix B (b) (2) (A)	Maps at a scale of 1:24,000 (or appropriate map scale agreed to by staff) of each proposed transmission line route, showing the settled areas, parks, recreational areas, scenic areas, and existing transmission lines within one mile of the proposed route(s);				Figure 3-5 Figure 3-6 Figure 3-7 Figure 3-8					
Appendix B (b) (2) (B)	A full-page color photographic reproduction depicting a representative above ground section of the transmission line route prior to construction and a full-page color photographic simulation of that section of the transmission line route after construction.				Figure 3-10C					
Appendix B (b) (2) (C)	A detailed description of the design, construction, and operation of any electric transmission facilities, such as power lines, substations, switchyards, or other transmission equipment, which will be constructed or modified to transmit electrical power from the proposed power plant to the load centers to be served by the facility. Such description shall include the width of rights-of-way and the physical and electrical characteristics of electrical transmission facilities such as towers, conductors, and insulators.				Section 3.4.5 Section 3.6 Appendix H, System Impact Study Appendix I, Electric and Magnetic Field Calculations					
Appendix B (b) (2) (D)	A description of how the route and additional transmission facilities were selected, and the consideration given to engineering constraints, environmental impacts, resource conveyance constraints, and electric transmission constraints; and				Section 3.6					

Adequacy Issue:	Adequate		Inadequate		DATA ADEQUACY WORKSHEET		Revision No.	0	Date	
Technical Area:	**Efficiency**				Project:	Solar Two Project		Technical Staff:		
Project Manager:					Docket:			Technical Senior:		

Siting Regulations	**Information**	**AFC Section Number**	**Adequate Yes Or No**	**Information Required To Make AFC Conform With Regulations**
Appendix B (e) (1)	A discussion of how facility closure will be accomplished in the event of premature or unexpected cessation of operations.	Section 3.12		
Appendix B (g) (1)	...provide a discussion of the existing site conditions, the expected direct, indirect and cumulative impacts due to the construction, operation and maintenance of the Project, the measures proposed to mitigate adverse environmental impacts of the Project, the effectiveness of the proposed measures, and any monitoring plans proposed to verify the effectiveness of the mitigation.	Section 3.3.1 Section 3.5.7 Section 3.5.9		
Appendix B (h) (3) (A)	A discussion of the sources and availability of the fuel or fuels to be used over the estimated service life of the facilities.	Section 3.1.1		
Appendix B (h) (3) (B)	A discussion of the anticipated service life and degree of reliability expected to be achieved by the proposed facilities based on a consideration of:	Section 3.1 Section 3.11		
Appendix B (h) (3) (B) (i)	Expected overall availability factor, and annual and lifetime capacity factors;	Section 3.1 Section 3.9.14 Section 3.11 Section 3.11.2		

Adequacy Issue:	Adequate		Inadequate		DATA ADEQUACY WORKSHEET		Revision No.	0	Date	
Technical Area:	**Efficiency**				Project:	Solar Two Project		Technical Staff:		
Project Manager:					Docket:			Technical Senior:		

Siting Regulations	**Information**	**AFC Section Number**	**Adequate Yes Or No**	**Information Required To Make AFC Conform With Regulations**
Appendix B (h) (3) (B) (ii)	The demonstrated or anticipated feasibility of the technologies, systems, components, and measures proposed to be employed in the facilities, including the power generation system, the heat dissipation system, the water supply system, the reinjection system, the atmospheric emission control system, resource conveyance lines, and the waste disposal system;	Section 3.1 Section 3.4.4 Appendix B, Solar Stirling Engine		
Appendix B (h) (3) (B) (iii)	Geologic and flood hazards, meteorologic conditions and climatic extremes, and cooling water availability;	Section 3.9.4 Section 3.10 Appendix E, Preliminary Geotechnical and Geologic Hazards Evaluation Appendix N, Initial Drainage Report		
Appendix B (h) (3) (B) (iv)	Special design features adopted by the Applicant or resource supplier to ensure power plant reliability including equipment redundancy; and	Section 3.1 Section 3.4.4 Section 3.9.14 Section 3.11 Section 3.11.2 Appendix B, Solar Stirling Engine		
Appendix B (h) (3) (B) (v)	For technologies not previously installed and operated in California, the expected power plant maturation period.	Section 3.4.4		

Adequacy Issue:	Adequate		Inadequate		DATA ADEQUACY WORKSHEET		Revision No.	0	Date	
Technical Area:	**Efficiency**				Project:	Solar Two Project		Technical Staff:		
Project Manager:					Docket:			Technical Senior:		
Siting Regulations	**Information**				**AFC Section Number**		**Adequate Yes Or No**	**Information Required To Make AFC Conform With Regulations**		
Appendix B (i) (1) (A)	Tables which identify laws, regulations, ordinances, standards, adopted local, regional, state, and federal land use plans, leases, and permits applicable to the proposed Project, and a discussion of the applicability of, and conformance with each. The table or matrix shall explicitly reference pages in the application wherein conformance, with each law or standard during both construction and operation of the facility is discussed; and				Section 3.6.2.1 Section 3.13 Appendix F, Mechanical and Fire Protection Engineering Design Criteria Appendix K, Hydrogen System Design Criteria Appendix M, Structural Engineering Design Criteria Appendix O, Civil Engineering and Civil Design Appendix P, Electrical Engineering Design Criteria Appendix Q, Control Systems Engineering Design Criteria					
Appendix B (i) (1) (B)	Tables which identify each agency with jurisdiction to issue applicable permits, leases, and approvals or to enforce identified laws, regulations, standards, and adopted local, regional, state and federal land use plans, and agencies which would have permit approval or enforcement authority, but for the exclusive authority of the commission to certify sites and related facilities.				N/A					

Adequacy Issue:	Adequate		Inadequate		DATA ADEQUACY WORKSHEET		Revision No.	0	Date	
Technical Area:	**Efficiency**				Project:	Solar Two Project		Technical Staff:		
Project Manager:					Docket:			Technical Senior:		
Siting Regulations	**Information**				**AFC Section Number**		**Adequate Yes Or No**	**Information Required To Make AFC Conform With Regulations**		
Appendix B (i) (2)	The name, title, phone number, address (required), and email address (if known), of an official who was contacted within each agency, and also provide the name of the official who will serve as a contact person for Commission staff.				N/A					
Appendix B (i) (3)	A schedule indicating when permits outside the authority of the commission will be obtained and the steps the applicant has taken or plans to take to obtain such permits.				Throughout the AFC					
Appendix B (g) (1)	...provide a discussion of the existing site conditions, the expected direct, indirect and cumulative impacts due to the construction, operation and maintenance of the Project, the measures proposed to mitigate adverse environmental impacts of the Project, the effectiveness of the proposed measures, and any monitoring plans proposed to verify the effectiveness of the mitigation.				Section 3.3.1 Section 3.5.7 Section 3.5.9 Section 3.6.2 Appendix I, Electric and Magnetic Field Calculations					
Appendix B (g) (18) (A)	The locations and a description of the existing switchyards and overhead and underground transmission lines that would be affected by the proposed Project.				Figure 3-1 Figure 3-2 Figure 3-3 Figure 3-5 Figure 3-6 Figure 3-7 Figure 3-8					

Adequacy Issue:	Adequate		Inadequate		DATA ADEQUACY WORKSHEET		Revision No.	0	Date	
Technical Area:	**Efficiency**				Project:	Solar Two Project		Technical Staff:		
Project Manager:					Docket:			Technical Senior:		
Siting Regulations	**Information**				**AFC Section Number**		**Adequate Yes Or No**	**Information Required To Make AFC Conform With Regulations**		
Appendix B (g) (18) (B)	An estimate of the existing electric and magnetic fields from the facilities listed in (A) above and the future electric and magnetic fields that would be created by the proposed Project, calculated at the property boundary of the site and at the edge of the rights-of-way for any transmission line. Also provide an estimate of the radio and television interference that could result from the Project.				Section 3.6.2.2 Section 3.6.2.3 Appendix I, Electric and Magnetic Field Calculations					
Appendix B (g) (18) (C)	Specific measures proposed to mitigate identified impacts, including a description of measures proposed to eliminate or reduce radio and television interference, and all measures taken to reduce electric and magnetic field levels.				Section 3.6.2.2 Section 3.6.2.3					
Appendix B (i) (1) (A)	Tables which identify laws, regulations, ordinances, standards, adopted local, regional, state, and federal land use plans, leases, and permits applicable to the proposed Project, and a discussion of the applicability of, and conformance with each. The table or matrix shall explicitly reference pages in the application wherein conformance, with each law or standard during both construction and operation of the facility is discussed; and				Section 3.6.2.1 Section 3.13 Throughout the AFC					

Adequacy Issue:	Adequate		Inadequate		DATA ADEQUACY WORKSHEET		Revision No.	0	Date	
Technical Area:	**Efficiency**				Project:	Solar Two Project		Technical Staff:		
Project Manager:					Docket:			Technical Senior:		
Siting Regulations	**Information**				**AFC Section Number**		**Adequate Yes Or No**	**Information Required To Make AFC Conform With Regulations**		
Appendix B (i) (1) (B)	Tables which identify each agency with jurisdiction to issue applicable permits, leases, and approvals or to enforce identified laws, regulations, standards, and adopted local, regional, state and federal land use plans, and agencies which would have permit approval or enforcement authority, but for the exclusive authority of the commission to certify sites and related facilities.				Throughout the AFC					
Appendix B (i) (2)	The name, title, phone number, address (required), and email address (if known), of an official who was contacted within each agency, and also provide the name of the official who will serve as a contact person for Commission staff.				Throughout the AFC					
Appendix B (i) (3)	A schedule indicating when permits outside the authority of the commission will be obtained and the steps the applicant has taken or plans to take to obtain such permits.				Throughout the AFC					
Appendix B (h) (2) (A)	A discussion of the need for the additional electric transmission lines, substations, or other equipment, the basis for selecting principal points of junction with the existing electric transmission system, and the capacity and voltage levels of the proposed lines, along with the basis for selection of the capacity and voltage levels.				Section 3.6 Appendix H, System Impact Study Figure 3-5 Figure 3-6 Figure 3-7 Figure 3-8 Figure 3-32 Figure 3-33 Figure 3-34					

Adequacy Issue:	Adequate		Inadequate		DATA ADEQUACY WORKSHEET		Revision No.	0	Date	
Technical Area:	**Efficiency**				Project:	Solar Two Project		Technical Staff:		
Project Manager:					Docket:			Technical Senior:		
Siting Regulations	**Information**				**AFC Section Number**		**Adequate Yes Or No**	**Information Required To Make AFC Conform With Regulations**		
Appendix B (h) (2) (B)	A discussion of the extent to which the proposed electric transmission facilities have been designed, planned, and routed to meet the transmission requirements created by additional generating facilities planned by the applicant or any other entity.				Section 3.6 Appendix H, System Impact Study Figure 3-5 Figure 3-6 Figure 3-7 Figure 3-8					
Appendix B (b) (2) (C)	A detailed description of the design, construction, and operation of any electric transmission facilities, such as power lines, substations, switchyards, or other transmission equipment, which will be constructed or modified to transmit electrical power from the proposed power plant to the load centers to be served by the facility. Such description shall include the width of rights-of-way and the physical and electrical characteristics of electrical transmission facilities such as towers, conductors, and insulators. This description shall include power load flow diagrams which demonstrate conformance or nonconformance with utility reliability and planning criteria at the time the facility is expected to be placed in operation and five years thereafter; and				Appendix H, System Impact Study Figure 3-5 Figure 3-6 Figure 3-7 Figure 3-8 Figure 3-32 Figure 3-33 Figure 3-34					

Adequacy Issue:	Adequate		Inadequate		DATA ADEQUACY WORKSHEET		Revision No.	0	Date	
Technical Area:	**Efficiency**				Project:	Solar Two Project		Technical Staff:		
Project Manager:					Docket:			Technical Senior:		

Siting Regulations	Information	AFC Section Number	Adequate Yes Or No	Information Required To Make AFC Conform With Regulations
Appendix B (b) (2) (D)	A description of how the route and additional transmission facilities were selected, and the consideration given to engineering constraints, environmental impacts, resource conveyance constraints, and electric transmission constraints.	Section 3.6 Appendix H, System Impact Study Figure 3-5 Figure 3-6 Figure 3-7 Figure 3-8 Figure 3-32 Figure 3-33 Figure 3-34		
Appendix B (b) (2) (E)	A completed System Impact Study or signed System Impact Study Agreement with the California Independent System Operator and proof of payment. When not connecting to the California Independent System Operator controlled grid, provide the executed System Impact Study agreement and proof of payment to the interconnecting utility. If the interconnection and operation of the proposed Project will likely impact an transmission system that is not controlled by the interconnecting utility (or California Independent System Operator), provide evidence of a System Impact Study or agreement and proof of payment (when applicable) with/to the impacted transmission owner or provide evidence that there are no system impacts requiring mitigation.	Appendix H, System Impact Study		

Adequacy Issue:	Adequate		Inadequate		DATA ADEQUACY WORKSHEET		Revision No.	0	Date	
Technical Area:	**Efficiency**				Project:	Solar Two Project		Technical Staff:		
Project Manager:					Docket:			Technical Senior:		
Siting Regulations	**Information**				**AFC Section Number**		**Adequate Yes Or No**	**Information Required To Make AFC Conform With Regulations**		
Appendix B (i) (1) (A)	Tables which identify laws, regulations, ordinances, standards, adopted local, regional, state, and federal land use plans, leases, and permits applicable to the proposed Project, and a discussion of the applicability of, and conformance with each. The table or matrix shall explicitly reference pages in the application wherein conformance, with each law or standard during both construction and operation of the facility is discussed; and				Section 3.6.2 Section 3.13 Throughout the AFC					
Appendix B (i) (1) (B)	Tables which identify each agency with jurisdiction to issue applicable permits, leases, and approvals or to enforce identified laws, regulations, standards, and adopted local, regional, state and federal land use plans, and agencies which would have permit approval or enforcement authority, but for the exclusive authority of the commission to certify sites and related facilities.				Throughout the AFC					
Appendix B (i) (2)	The name, title, phone number, address (required), and email address (if known), of an official who was contacted within each agency, and also provide the name of the official who will serve as a contact person for Commission staff.				Throughout the AFC					
Appendix B (i) (3)	A schedule indicating when permits outside the authority of the commission will be obtained and the steps the applicant has taken or plans to take to obtain such permits.				Throughout the AFC					

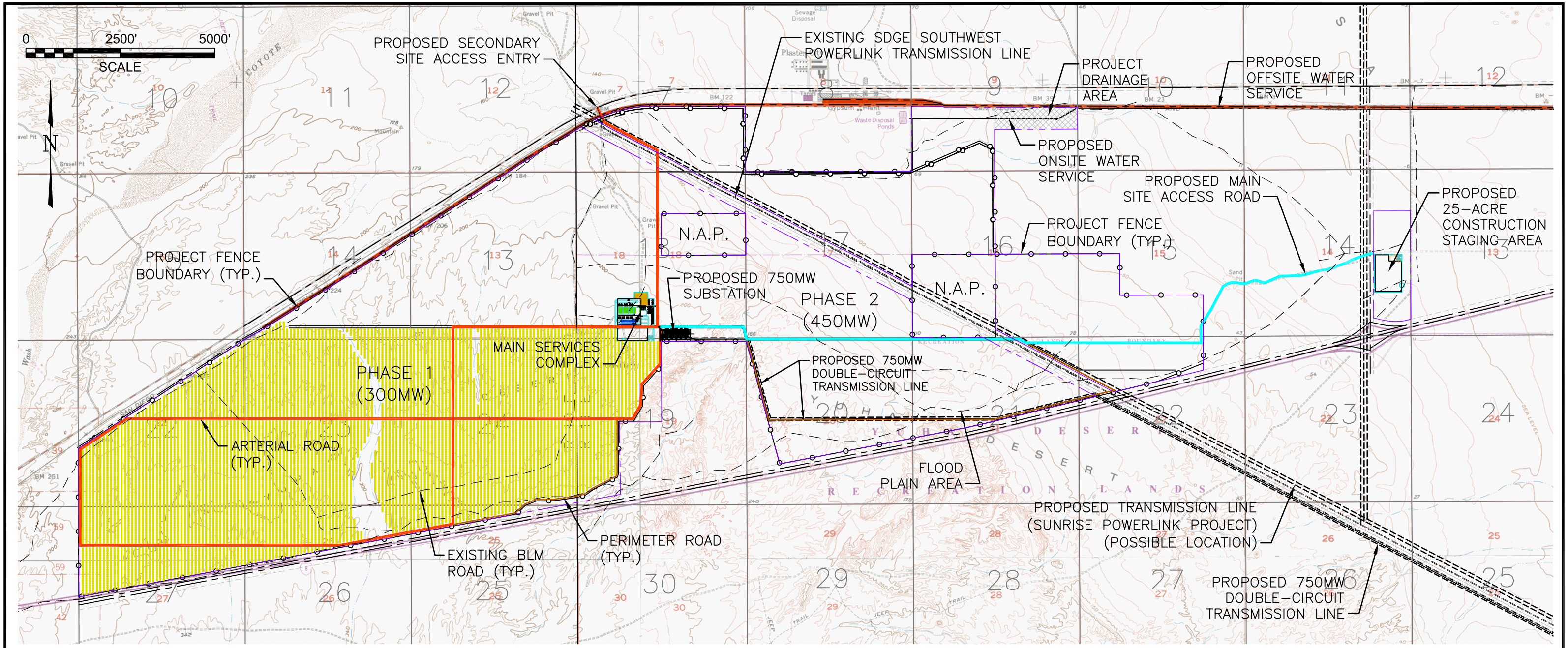

LEGEND

- PROJECT BOUNDARY
- SITE ACCESS ROAD
- 30' MAIN ARTERIAL
- 12' PERIMETER ROAD
- PROPOSED FENCE
- EXIST. BLM DESIGNATED OPEN ROUTES (APPROXIMATE LOCATIONS SHOWN FOR PLANNING PURPOSES ONLY)
- N.A.P. NOT A PART (OWNED BY OTHERS)
- PHASE 1 SUNCATCHERS

PRELIMINARY

NO.	DATE		BY	APP.
P4	04/16/08	REVISED ENTIRE SITE PLAN	PH	
P5	04/30/08	REVISED WESTERN FENCE BOUNDARY TO MATCH		
		PROPERTY BOUNDARY (PER URS CALCS); REVISED		
		EASTERN ACCESS ROAD (PER URS); FILLED		
		SUNCATCHERS INTO ADDED AREAS	PH	

STANTEC CONSULTING INC.
9400 S.W. BARNES ROAD
STE. 200
PORTLAND, OREGON, 97225
503.297.1631
STANTEC.COM

DRN. STC/GSP	DES. STC/PH	CHK. STC/	DATE 04/09/08
SCALE 1"=3000'		APP.	DATE

SOLAR TWO - SITE PLAN
PHASE I - DURING CONSTRUCTION
SOLAR TWO PROJECT

URS

CREATED BY: STANTEC	DATE: 06-11-08	FIG. NO: 3-1
PM: AL	PROJ. NO: 27657102.00300	

P:\Sys4\2000026801-Solar2\Exhibits\S2-G-0001-01.dwg, 4/30/2008 1:45:26 PM, gparsons

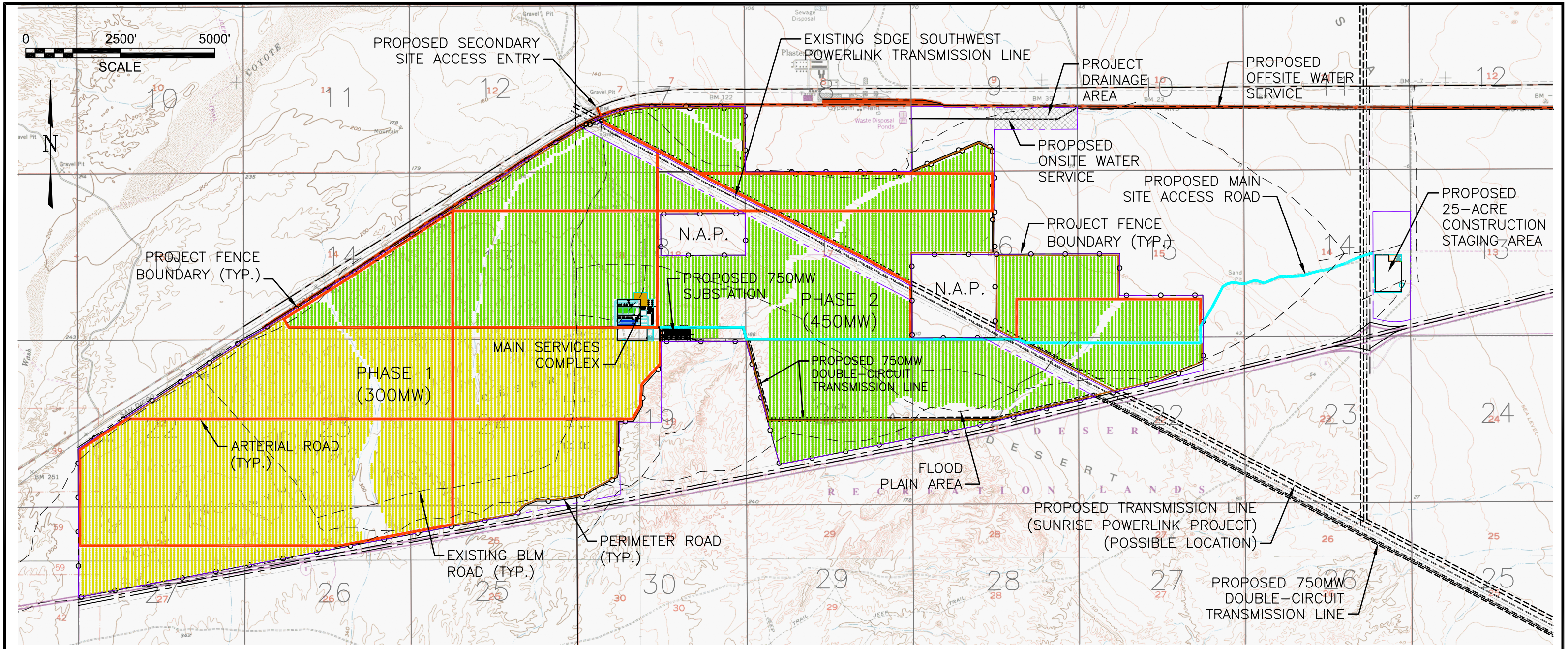

LEGEND

- PROJECT BOUNDARY
- SITE ACCESS ROAD
- 30' MAIN ARTERIAL
- 12' PERIMETER ROAD
- PROPOSED FENCE
- EXIST. BLM DESIGNATED OPEN ROUTES (APPROXIMATE LOCATIONS SHOWN FOR PLANNING PURPOSES ONLY)
- N.A.P. NOT A PART (OWNED BY OTHERS)
- PHASE 1 SUNCATCHERS
- PHASE 2 SUNCATCHERS
- PHASE 2 SUNCATCHERS (FINAL BUILDOUT)

PRELIMINARY

NO.	DATE		BY	APP.
P6	04/16/08	REVISED ENTIRE SITE PLAN		
P7	04/30/08	REVISED WESTERN FENCE BOUNDARY TO MATCH		
		PROPERTY BOUNDARY (PER URS CALCS); REVISED		
		EASTERN ACCESS ROAD (PER URS); FILLED		
		SUNCATCHERS INTO ADDED AREAS	PH	

STANTEC CONSULTING INC.
9400 S.W. BARNES ROAD
STE. 200
PORTLAND, OREGON, 97225
503.297.1631
STANTEC.COM

DRN. STC/GSP	DES. STC/PH	CHK. STC/	DATE 04/09/08
SCALE 1"=3000'		APP.	DATE

SOLAR TWO - SITE PLAN
PHASE II - DURING CONSTRUCTION
SOLAR TWO PROJECT

URS

CREATED BY: STANTEC	DATE: 06-11-08	FIG. NO: 3-2
PM: AL	PROJ. NO: 27657102.00300	

P:\Sys4\2000026801-Solar2\Exhibits\S2-G-0001-02.dwg, 4/30/2008 1:40:57 PM, gparsons

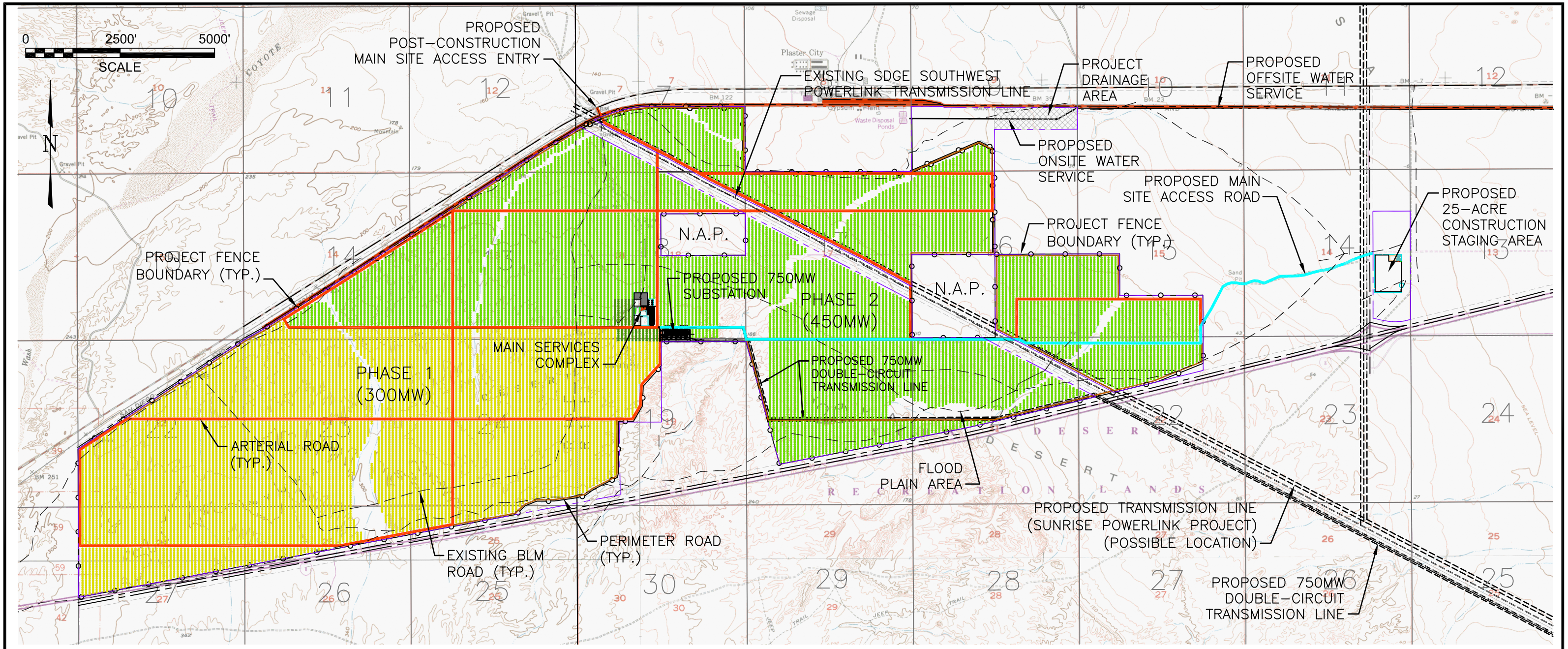

LEGEND

- PROJECT BOUNDARY
- SITE ACCESS ROAD
- 30' MAIN ARTERIAL
- 12' PERIMETER ROAD
- PROPOSED FENCE
- EXIST. BLM DESIGNATED OPEN ROUTES (APPROXIMATE LOCATIONS SHOWN FOR PLANNING PURPOSES ONLY)
- N.A.P. NOT A PART (OWNED BY OTHERS)
- PHASE 1 SUNCATCHERS
- PHASE 2 SUNCATCHERS
- PHASE 2 SUNCATCHERS (FINAL BUILDOUT)

PRELIMINARY

NO.	DATE		BY	APP.
P7	04/28/08	REVISED SITE PLAN	PH	
P8	04/30/08	REVISED WESTERN FENCE BOUNDARY TO MATCH		
		PROPERTY BOUNDARY (PER URS CALCS); REVISED		
		EASTERN ACCESS ROAD (PER URS); FILLED		
		SUNCATCHERS INTO ADDED AREAS	PH	

STANTEC CONSULTING INC.
9400 S.W. BARNES ROAD
STE. 200
PORTLAND, OREGON, 97225
503.297.1631
STANTEC.COM

DRN. STC/GSP	DES. STC/PH	CHK. STC/	DATE 04/09/08
SCALE 1"=3000'		APP.	DATE

SOLAR TWO - SITE PLAN
POST CONSTRUCTION
SOLAR TWO PROJECT

URS

CREATED BY: STANTEC	DATE: 06-11-08	FIG. NO: 3-3
PM: AL	PROJ. NO: 27657102.00300	

P:\Sys4\2000026801-Solar2\Exhibits\S2-G-0001-03.dwg, 4/30/2008 2:05:24 PM, gparsons

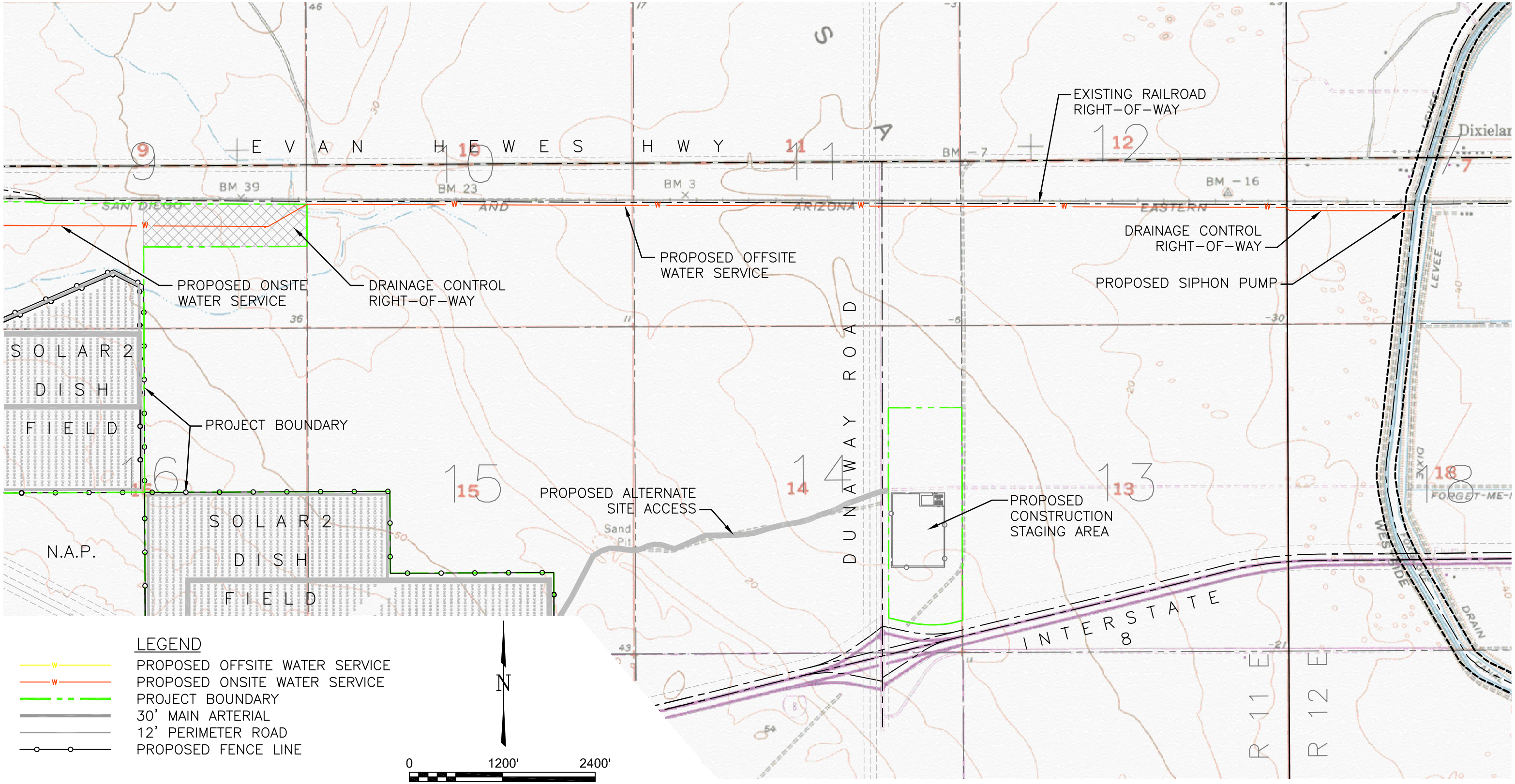

PRELIMINARY

NO.	DATE		BY	APP.
		ADDED DRAINAGE CONTROL ROW; UPDATED LABELS	PH	
P5	04/16/08	REVISED PROP. BOUNDARY; REVISED UTILITY ROUTING;		
		CHANGED TO 750MW SYSTEM	PH	
P6	04/30/08	REVISED PROP. BOUNDARY & ACCESS ROADS;		
		RENAMED "LAYDOWN AREA" TO "STAGING AREA"	PH	

STANTEC CONSULTING INC.
9400 S.W. BARNES ROAD
STE. 200
PORTLAND, OREGON, 97225
503.297.1631
STANTEC.COM

DRN. STC/GSP	DES. STC/PH	CHK. STC/	DATE 03/08/07
SCALE 1"=1200'		APP.	DATE

UTILITY PLAN
OFF-SITE UTILITY SERVICE
SOLAR TWO PROJECT

URS

CREATED BY: STANTEC	DATE: 06-11-08	FIG. NO: 3-4
PM: AL	PROJ. NO: 27657102.00300	

P:\Sys4\2000026801-Solar2\Exhibits\S2-U-0001-02.DWG, 4/30/2008 3:00:55 PM, gparsons

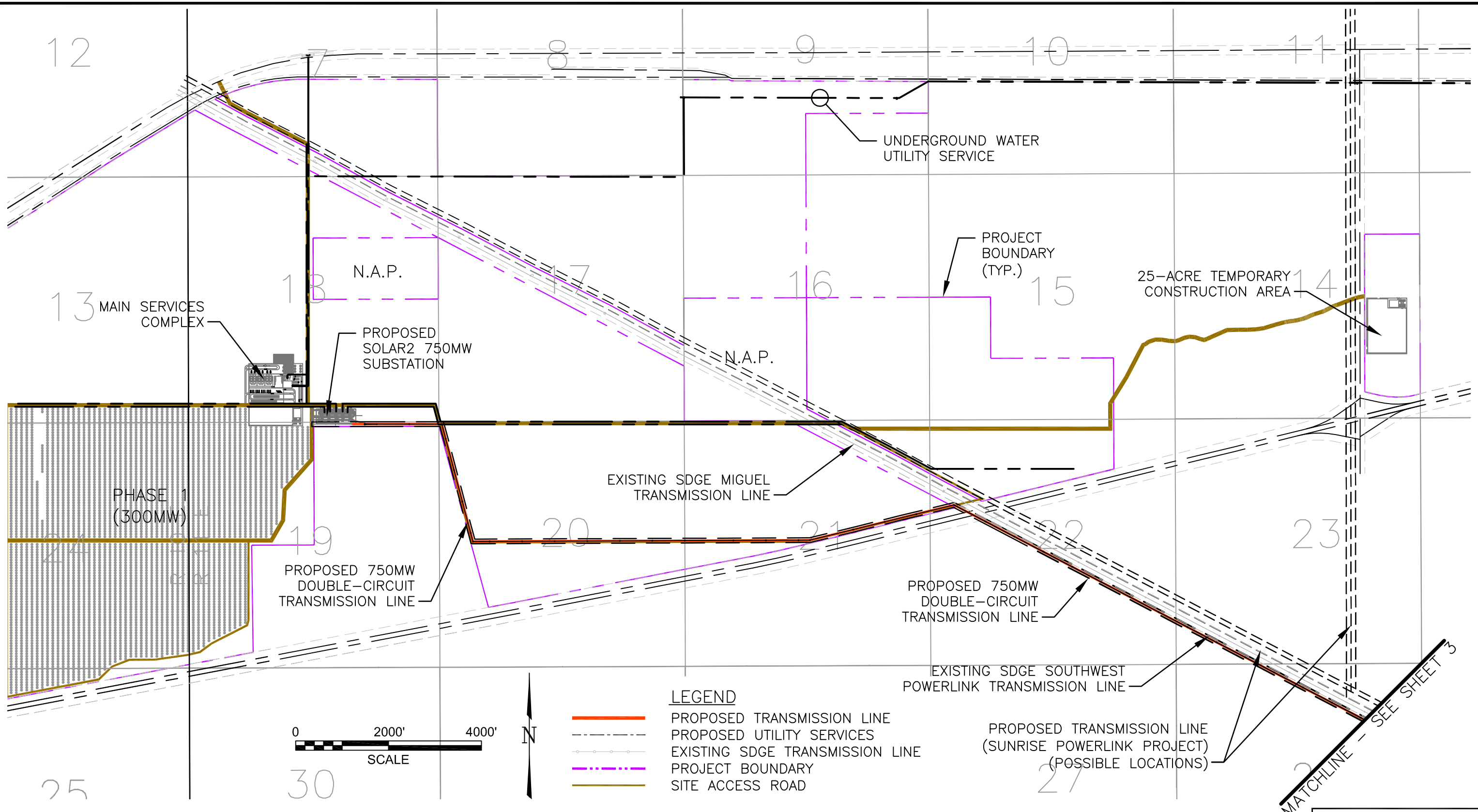

PRELIMINARY

NO.	DATE		BY	APP.
P1	04/23/07	ISSUED FOR PRELIMINARY REVIEW	PH	
P2	06/21/07	ADDED PHASE 1 COLLECTORS	PH	
P3	07/17/07	REVISED PROP. BOUNDARY; ADDED ADMIN. COMPLEX	PH	
P4	04/16/08	REVISED PROP. BOUNDARY; CHANGED TO		
		750MW SYSTEM	PH	

STANTEC CONSULTING INC.
9400 S.W. BARNES ROAD
STE. 200
PORTLAND, OREGON, 97225
503.297.1631
STANTEC.COM

DRN. STC/GSP	DES. STC/PH	CHK. STC/	DATE 01/23/07
SCALE 1"=2000'		APP.	DATE

230-KV TRANSMISSION LINE
PART A, PHASE I
SOLAR TWO PROJECT

URS

CREATED BY: STANTEC	DATE: 06-11-08	FIG. NO: 3-5
PM: AL	PROJ. NO: 27657102.00300	

P:\Sys4\2000026801-Solar2\Exhibits\S2-E-0350-01.dwg, 4/30/2008 3:41:28 PM, gparsons

N

UNDERGROUND WATER UTILITY SERVICE

PROJECT BOUNDARY (TYP.)

25-ACRE TEMPORARY CONSTRUCTION AREA

N.A.P.

MAIN SERVICES COMPLEX

PROPOSED SOLAR2 750MW SUBSTATION

PHASE 2 (450MW)

N.A.P.

EXISTING SDGE MIGUEL TRANSMISSION LINE

PHASE 1 (300MW)

PROPOSED 750MW DOUBLE-CIRCUIT TRANSMISSION LINE

PROPOSED 750MW DOUBLE-CIRCUIT TRANSMISSION LINE

EXISTING SDGE SOUTHWEST POWERLINK TRANSMISSION LINE

PROPOSED TRANSMISSION LINE (SUNRISE POWERLINK PROJECT) (POSSIBLE LOCATIONS)

MATCHLINE - SEE SHEET 3

LEGEND

- PROPOSED TRANSMISSION LINE
- PROPOSED UTILITY SERVICES
- EXISTING SDGE TRANSMISSION LINE
- PROJECT BOUNDARY
- SITE ACCESS ROAD

PRELIMINARY

NO.	DATE		BY	APP.
P2	06/21/07	ADDED PHASE 1 COLLECTORS	PH	
P3	07/17/07	REVISED PROP. BOUNDARY; ADDED ADMIN. COMPLEX	PH	
P4	04/16/08	REVISED PROP. BOUNDARY; CHANGED TO		
		750MW SYSTEM	PH	
P5	04/30/08	REVISED SITE BOUNDARY	PH	

STANTEC CONSULTING INC.
9400 S.W. BARNES ROAD
STE. 200
PORTLAND, OREGON, 97225
503.297.1631
STANTEC.COM

DRN. STC/GSP	DES. STC/PH	CHK. STC/	DATE 01/23/07
SCALE 1"=2000'		APP.	DATE

230-KV TRANSMISSION LINE
PART A, PHASE II
SOLAR TWO PROJECT

URS

CREATED BY: STANTEC	DATE: 06-11-08	FIG. NO: 3-6
PM: AL	PROJ. NO: 27657102.00300	

P:\Sys4\2000026801-Solar2\Exhibits\S2-E-0350-02.dwg, 4/30/2008 3:54:18 PM, gparsons

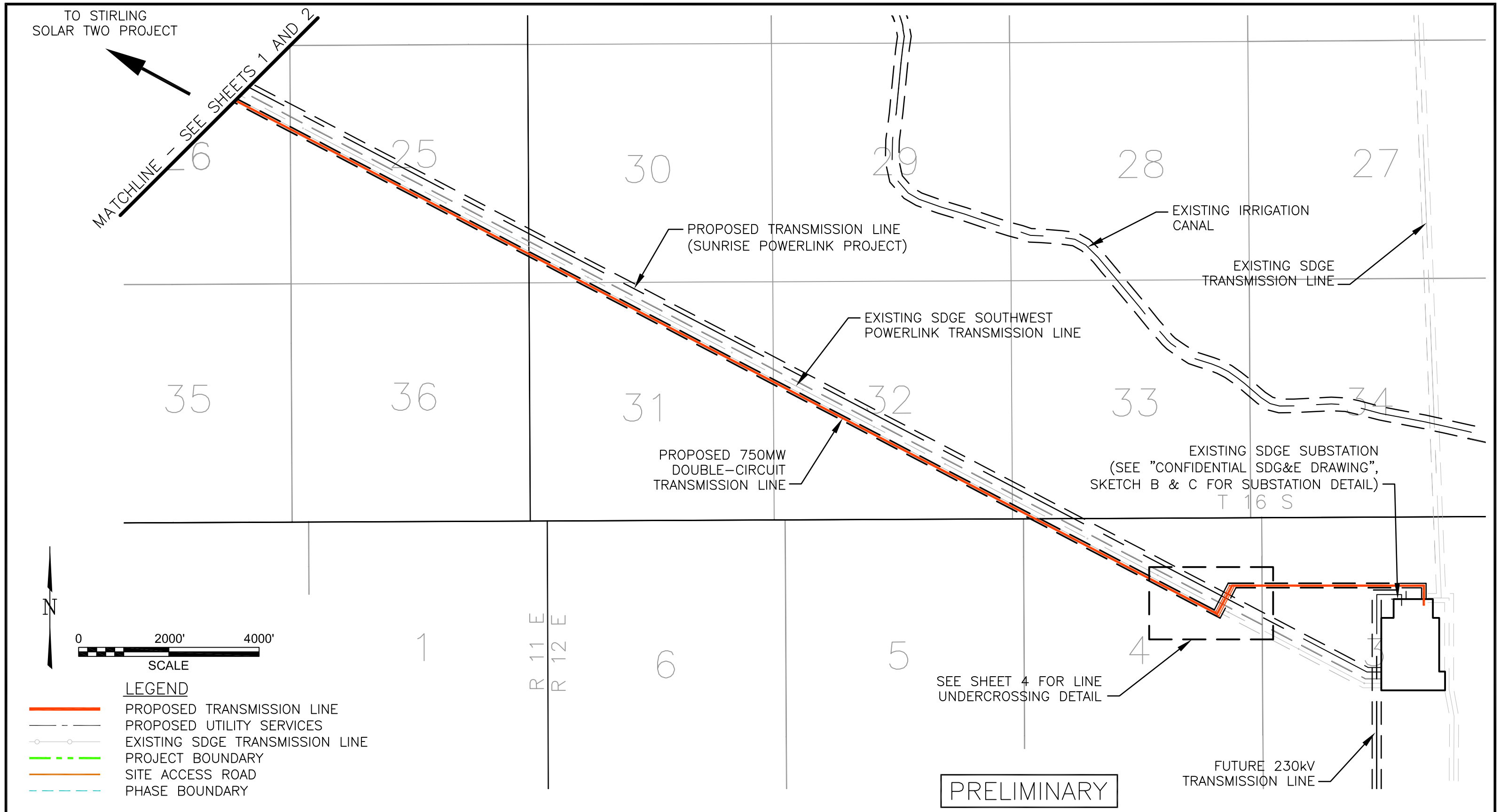

LEGEND

- PROPOSED TRANSMISSION LINE
- PROPOSED UTILITY SERVICES
- EXISTING SDGE TRANSMISSION LINE
- PROJECT BOUNDARY
- SITE ACCESS ROAD
- PHASE BOUNDARY

NO.	DATE		BY	APP.
P1	04/23/07	ISSUED FOR PRELIMINARY REVIEW	PH	
P2	04/16/08	CHANGED TO 750MW SYSTEM	PH	

STANTEC CONSULTING INC.
9400 S.W. BARNES ROAD
STE. 200
PORTLAND, OREGON, 97225
503.297.1631
STANTEC.COM

DRN. STC/GSP	DES. STC/PH	CHK. STC/	DATE 03/06/07
SCALE 1"=2000'		APP.	DATE

230-KV TRANSMISSION LINE
PART B
SOLAR TWO PROJECT

URS

CREATED BY: STANTEC	DATE: 06-11-08	FIG. NO: 3-7
PM: AL	PROJ. NO: 27657102.00300	

P:\Sys4\2000026801-Solar2\Exhibits\S2-E-0350-03.dwg, 4/16/2008 4:10:18 PM, gparsons

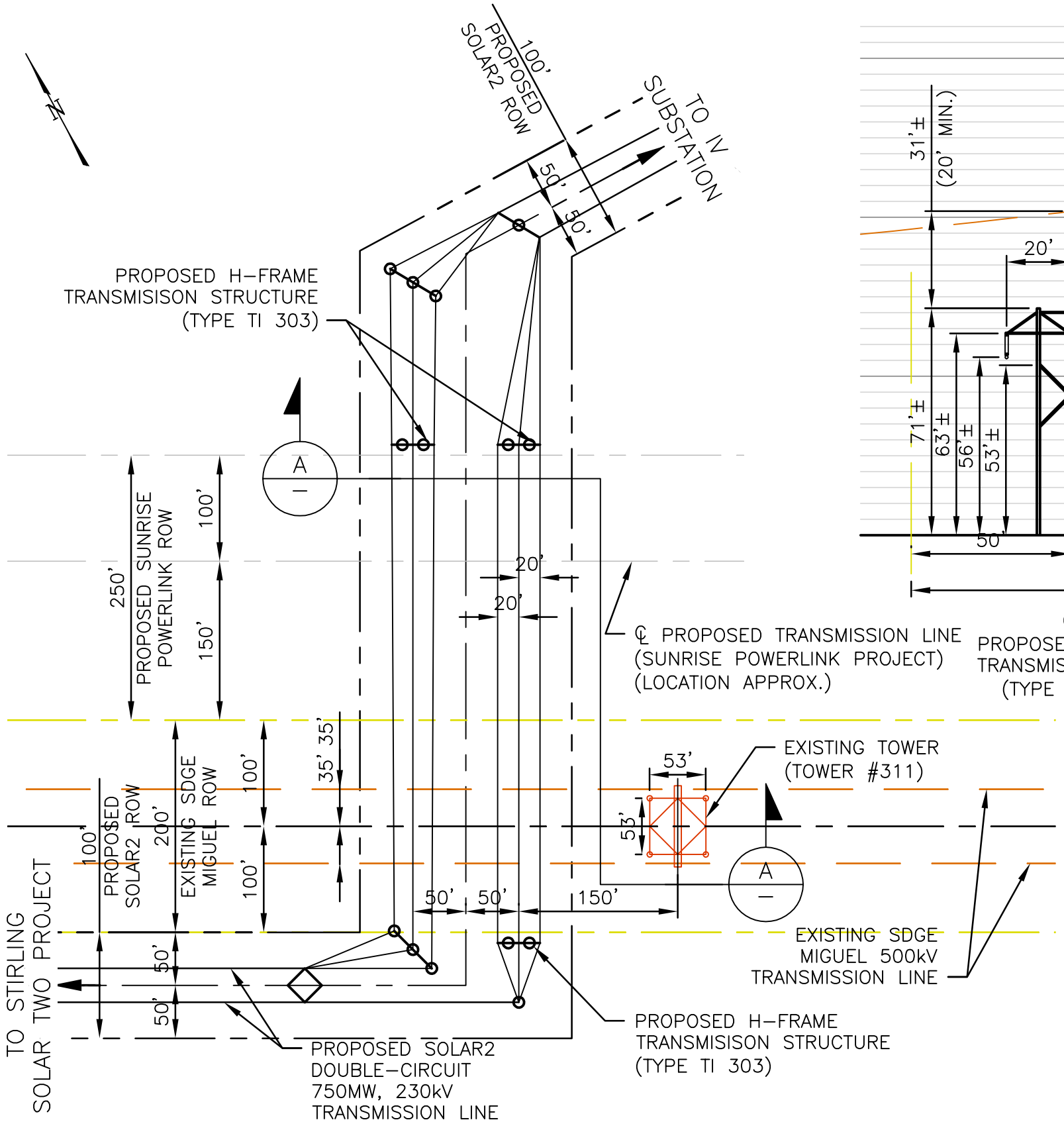

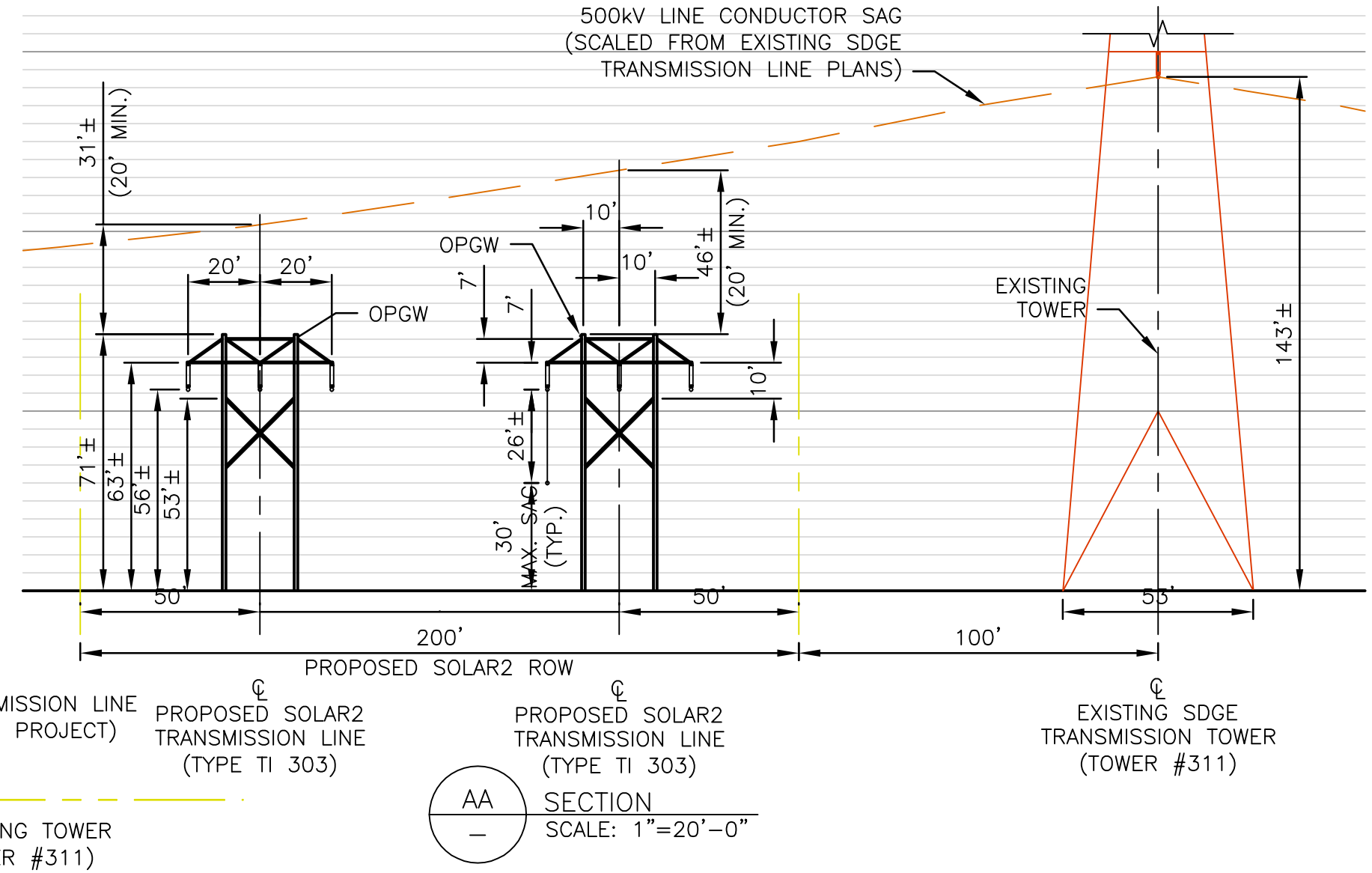

AA
—
SECTION
SCALE: 1"=20'-0"

PRELIMINARY

NO.	DATE		BY	APP.
P1	04/23/07	ISSUED FOR PRELIMINARY REVIEW	PH	
P2	04/16/08	CHANGED TO 750MW SUBSTATION DESIGN	PH	

STANTEC CONSULTING INC.
9400 S.W. BARNES ROAD
STE. 200
PORTLAND, OREGON, 97225
503.297.1631
STANTEC.COM

DRN. STC/GSP	DES. STC/PH	CHK. STC/	DATE 03/19/07
SCALE		APP.	DATE

230-KV TRANSMISSION LINE, PART B
UNDER CROSSING DETAIL
SOLAR TWO PROJECT

URS

CREATED BY: STANTEC	DATE: 06-11-08	FIG. NO: 3-8
PM: AL	PROJ. NO: 27657102.00300	

P:\Sys4\2000026801-Solar2\Exhibits\S2-E-0350-04.dwg, 4/16/2008 2:55:38 PM, slee

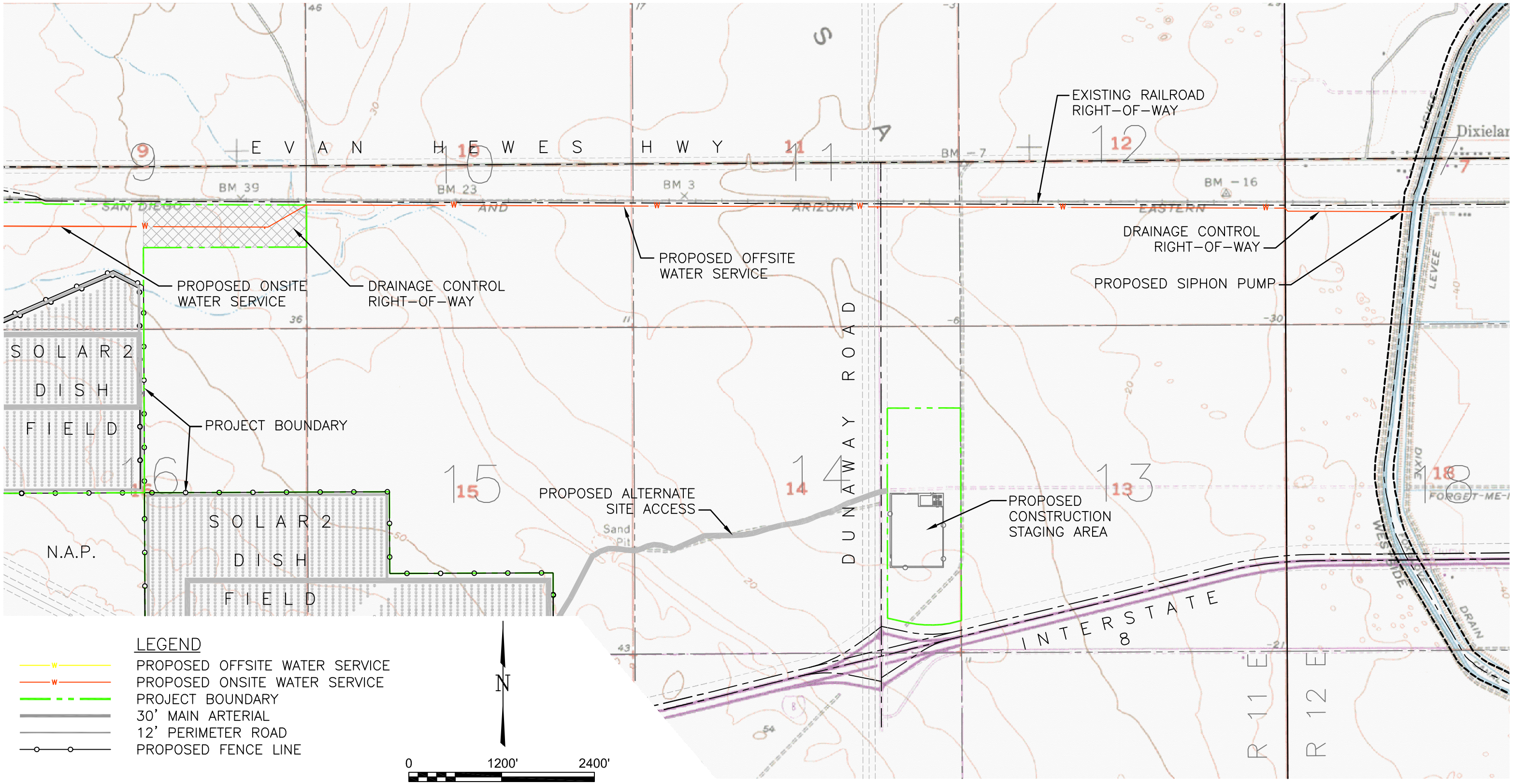

PRELIMINARY

NO.	DATE		BY	APP.
		ADDED DRAINAGE CONTROL ROW; UPDATED LABELS	PH	
P5	04/16/08	REVISED PROP. BOUNDARY; REVISED UTILITY ROUTING;		
		CHANGED TO 750MW SYSTEM	PH	
P6	04/30/08	REVISED PROP. BOUNDARY & ACCESS ROADS;		
		RENAMED "LAYDOWN AREA" TO "STAGING AREA"	PH	

STANTEC CONSULTING INC.
9400 S.W. BARNES ROAD
STE. 200
PORTLAND, OREGON, 97225
503.297.1631
STANTEC.COM

DRN. STC/GSP	DES. STC/PH	CHK. STC/	DATE 03/08/07
SCALE 1"=1200'		APP.	DATE

UTILITY PLAN
ON-SITE UTILITY SERVICE
SOLAR TWO PROJECT

URS

CREATED BY: STANTEC	DATE: 06-11-08	FIG. NO: 3-9
PM: AL	PROJ. NO: 27657102.00300	

P:\Sys4\2000026801-Solar2\Exhibits\S2-U-0001-02.DWG, 4/30/2008 3:00:55 PM, gparsons

EXISTING COLOR PHOTOGRAPHIC REPRODUCTION DEPICTING THE VISUAL APPEARANCE OF THE SITE PRIOR TO CONSTRUCTION

URS	CREATED BY: JW	DATE: 06-16-08	FIG. NO:
	PM: AL	PROJ. NO: 27657102.00300	3-10A

Path: G:\gis\projects\1577\22238980\mxd\title_blocks\section_3\section_3_10_a_.mxd, 06/16/08,

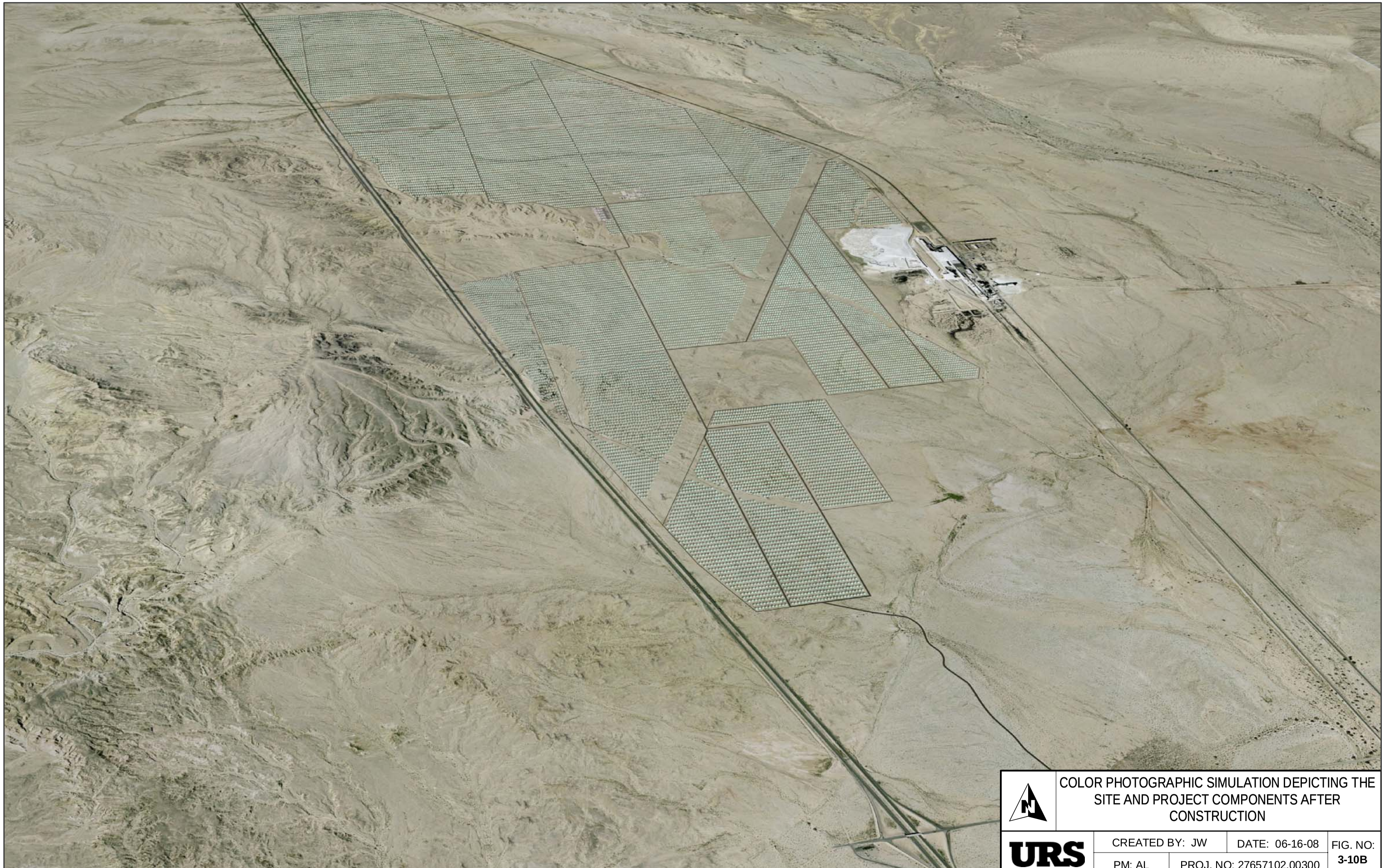

COLOR PHOTOGRAPHIC SIMULATION DEPICTING THE SITE AND PROJECT COMPONENTS AFTER CONSTRUCTION

URS	CREATED BY: JW	DATE: 06-16-08	FIG. NO: 3-10B
	PM: AL	PROJ. NO: 27657102.00300	

Path: G:\gis\projects\1577\22238980\mxd\title_blocks\section_3\section_3_10_b_.mxd, 06/16/08,

COLOR PHOTOGRAPHIC SIMULATION CLOSE-UP OF THE SITE AFTER CONSTRUCTION
SOLAR TWO PROJECT

URS	CREATED BY: JW	DATE: 06-16-08	FIG. NO: 3-10C
	PM: AL	PROJ. NO: 27657102.00300	

Path: G:\gis\projects\1577\22238980\mxd\title_blocks\section_3\section_3_10_c_.mxd, 06/16/08,

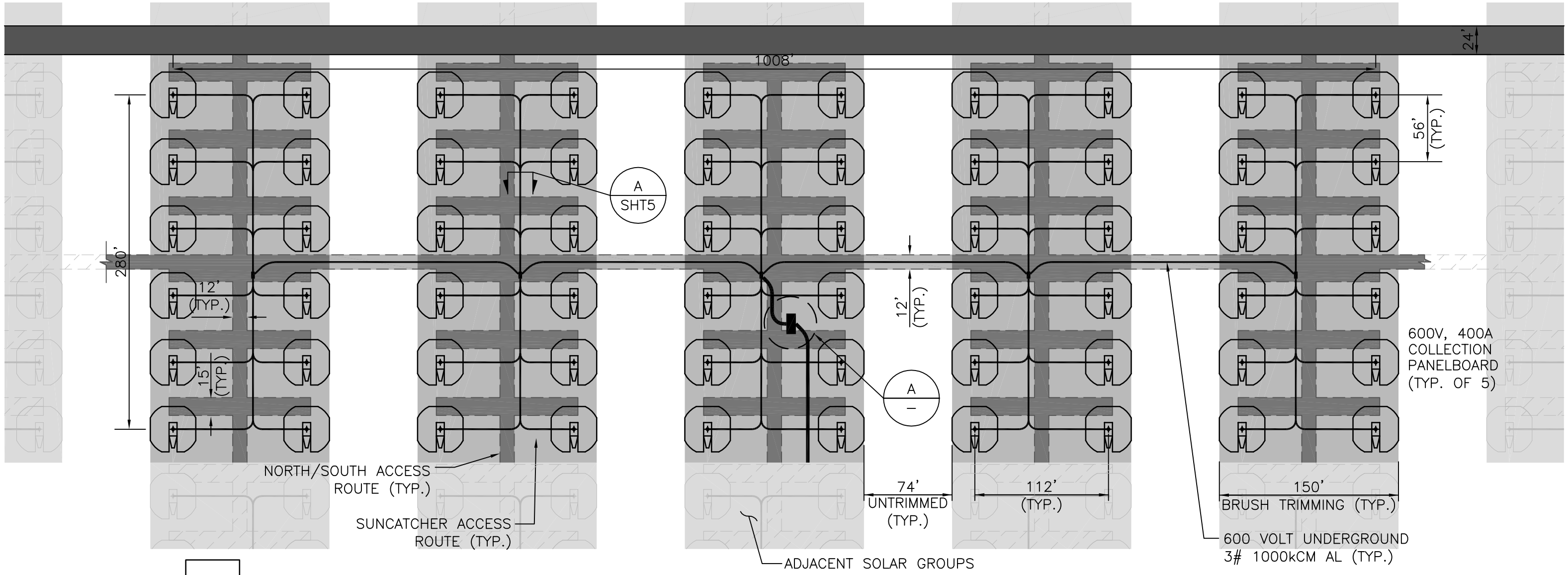

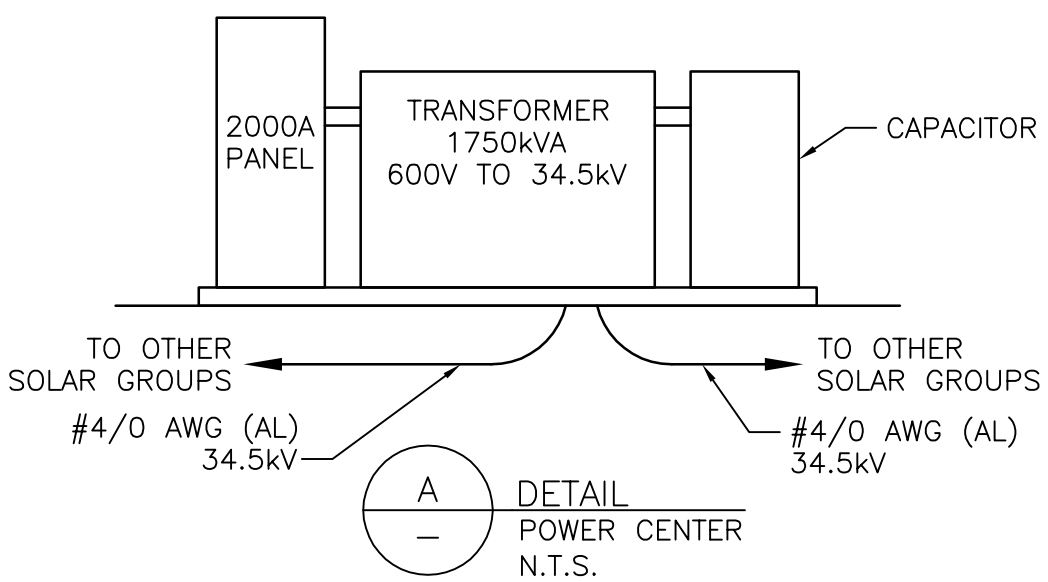

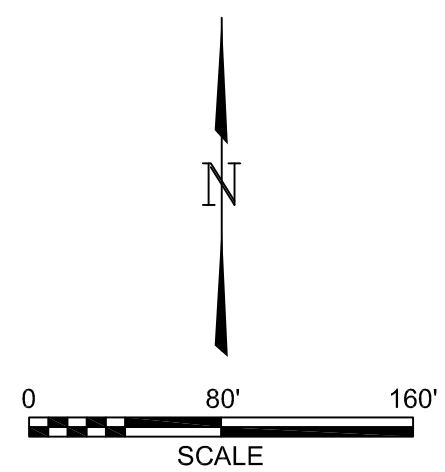

LEGEND

- BRUSH TRIMMING
- PAVED ROADWAYS
- UNPAVED ACCESS ROUTE
- SUNCATCHER UNIT

NOTES

1. THIS IS A REPRESENTATION (BUT NOT NECESSARILY TYPICAL) OF A 1.5MW SOLAR GROUP. THE 1.5MW SOLAR GROUPS WILL BE ARRANGED TO FIT THE CONTOURS OF THE SITE.
2. ONE 1.5MW SOLAR GROUP IS COMPRISED OF SIXTY (60) SUNCATCHER UNITS CONNECTED INTO FIVE (5) TWELVE–UNIT GROUPS CONNECTED TO A 600V, 400A COLLECTION PANELBOARD.

PRELIMINARY

NO.	DATE		BY	APP.
P1	04/23/07	ISSUED FOR PRELIMINARY REVIEW	PH	
P2	07/25/07	'CLEARING' REFERENCES CHANGES TO 'TRIMMING'	PH	
P3	02/27/08	RELOCATED ACCESS ROUTE	PH	
P4	04/16/08	REVISED CABLE TYPE	PH	

STANTEC CONSULTING INC.
9400 S.W. BARNES ROAD
STE. 200
PORTLAND, OREGON, 97225
503.297.1631
STANTEC.COM

DRN. STC/GSP	DES. STC/PH	CHK. STC/	DATE 03/07/07
SCALE 1"=80'–0"		APP.	DATE

SOLAR TWO 1.5-MW
SOLAR GROUP PLAN
SOLAR TWO PROJECT

URS

CREATED BY: STANTEC	DATE: 06-11-08	FIG. NO: 3-11
PM: AL	PROJ. NO: 27657102.00300	

P:\Sys4\2000026801-Solar2\Exhibits\S2-G-0002-01.dwg, 4/16/2008 1:47:03 PM, slee

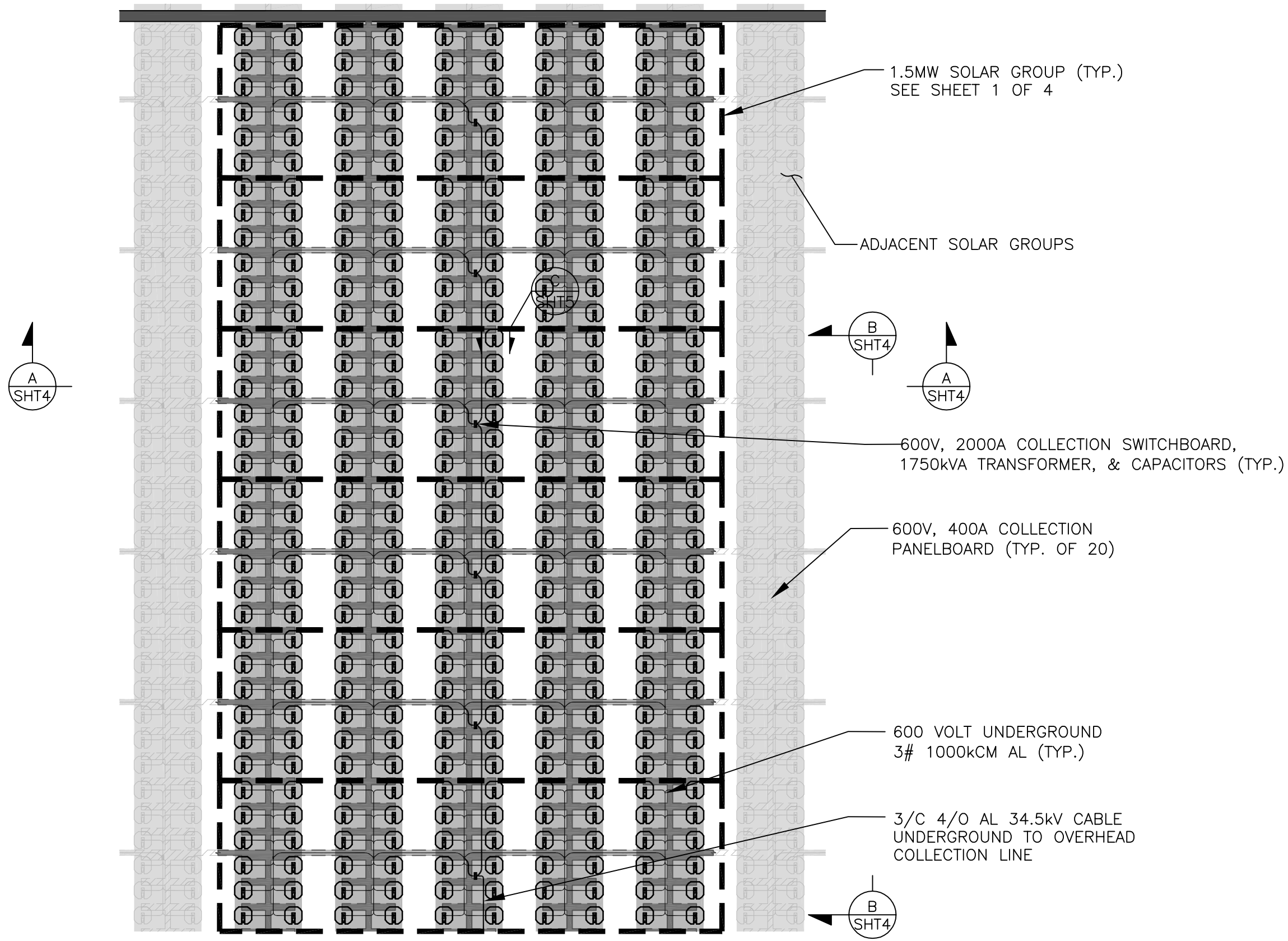

LEGEND

- BRUSH TRIMMING
- PAVED ROADWAYS
- UNPAVED ACCESS ROUTE
- SUNCATCHER UNIT

NOTES

1. THIS IS A REPRESENTATION (BUT NOT NECESSARILY TYPICAL) OF AN 9MW SOLAR GROUP. THE 9MW SOLAR GROUPS WILL BE ARRANGED TO FIT THE CONTOURS OF THE SITE.
2. THE SIX (6) 1.5MW SOLAR GROUPS ARE CONNECTED IN SERIES TO THE RISER TO THE OVERHEAD 34.5kV COLLECTION LINE BY 34.5kV UNDERGROUND CABLES

N

0 160' 320'
SCALE

PRELIMINARY

NO.	DATE		BY	APP.
P1	04/23/07	ISSUED FOR PRELIMINARY REVIEW	PH	
P2	07/25/07	'CLEARING' REFERENCES CHANGES TO 'TRIMMING'	PH	
P3	02/27/08	RELOCATED ACCESS ROUTE	PH	
P4	04/16/08	REVISED 9MW	PH	

Stantec
STANTEC CONSULTING INC.
9400 S.W. BARNES ROAD
STE. 200
PORTLAND, OREGON, 97225
503.297.1631
STANTEC.COM

DRN. STC/GSP	DES. STC/PH	CHK. STC/	DATE 03/07/07
SCALE 1"=160'-0"		APP.	DATE

SOLAR TWO 9-MW
SOLAR GROUP PLAN
SOLAR TWO PROJECT

URS

CREATED BY: STANTEC	DATE: 06-11-08	FIG. NO: 3-12
PM: AL	PROJ. NO: 27657102.00300	

P:\Sys4\2000026801-Solar2\Exhibits\S2-G-0002-02.dwg, 4/16/2008 1:39:30 PM, slee

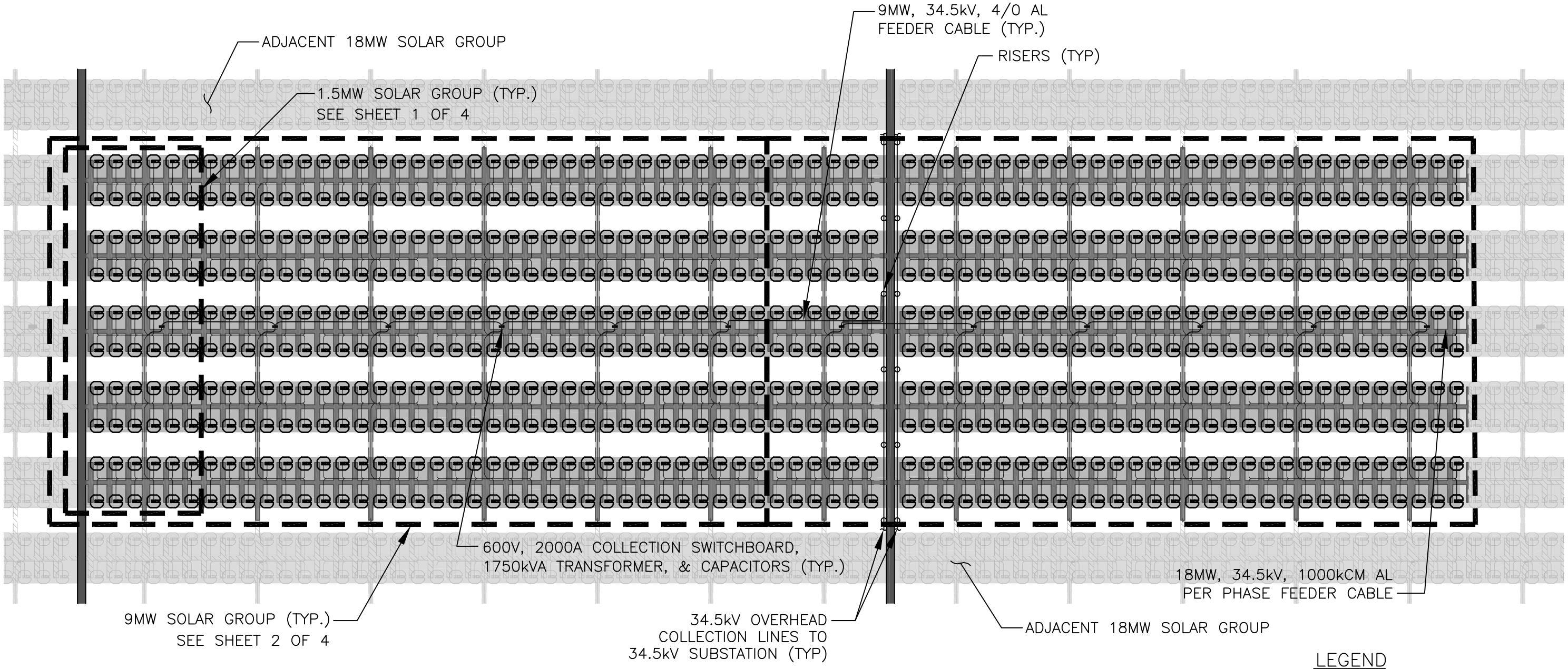

N

0 300' 600'

SCALE

LEGEND

- BRUSH TRIMMING
- PAVED ROADWAYS
- UNPAVED ACCESS ROUTE
- SUNCATCHER UNIT

NOTE

THIS IS A REPRESENTATION (BUT NOT NECESSARILY TYPICAL) OF AN 18MW SOLAR GROUP. THE 18MW SOLAR GROUPS WILL BE ARRANGED TO FIT THE CONTOURS OF THE SITE.

PRELIMINARY

NO.	DATE		BY	APP.
P1	04/23/07	ISSUED FOR PRELIMINARY REVIEW	PH	
P2	07/25/07	'CLEARING' REFERENCES CHANGES TO 'TRIMMING'	PH	
P3	02/27/08	RELOCATED ACCESS ROUTE	PH	
P4	04/16/08	REV. CABLE TYPE; 9MW GROUPS & OH COLL.	PH	

STANTEC CONSULTING INC.
9400 S.W. BARNES ROAD
STE. 200
PORTLAND, OREGON, 97225
503.297.1631
STANTEC.COM

DRN. STC/GSP	DES. STC/PH	CHK. STC/	DATE 03/07/07
SCALE 1"=300'-0"		APP.	DATE

SOLAR TWO 18-MW
SOLAR GROUP PLAN
SOLAR TWO PROJECT

URS

CREATED BY: STANTEC	DATE: 06-11-08	FIG. NO:
PM: AL	PROJ. NO: 27657102.00300	3-13

P:\Sys4\2000026801-Solar2\Exhibits\S2-G-0002-03.dwg, 4/16/2008 1:49:20 PM, slee

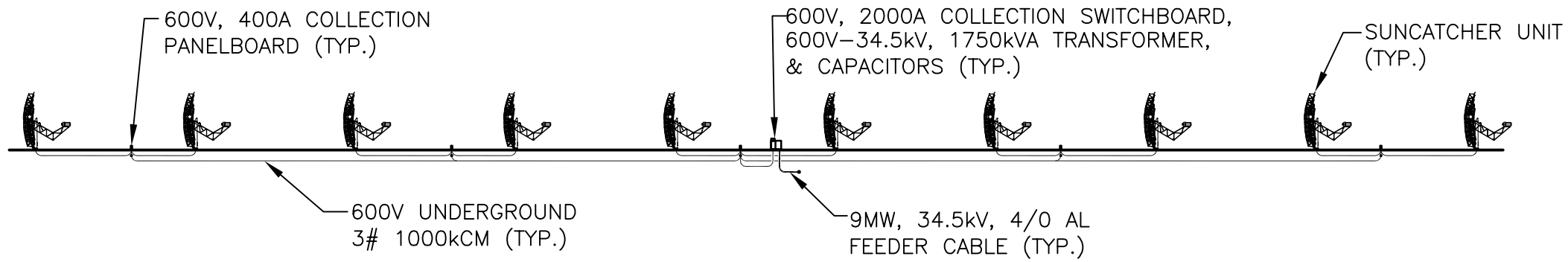

AA / – SECTION (LOOKING NORTH)
(SUNCATCHER UNITS FACING EAST)
SCALE: 1"=100'

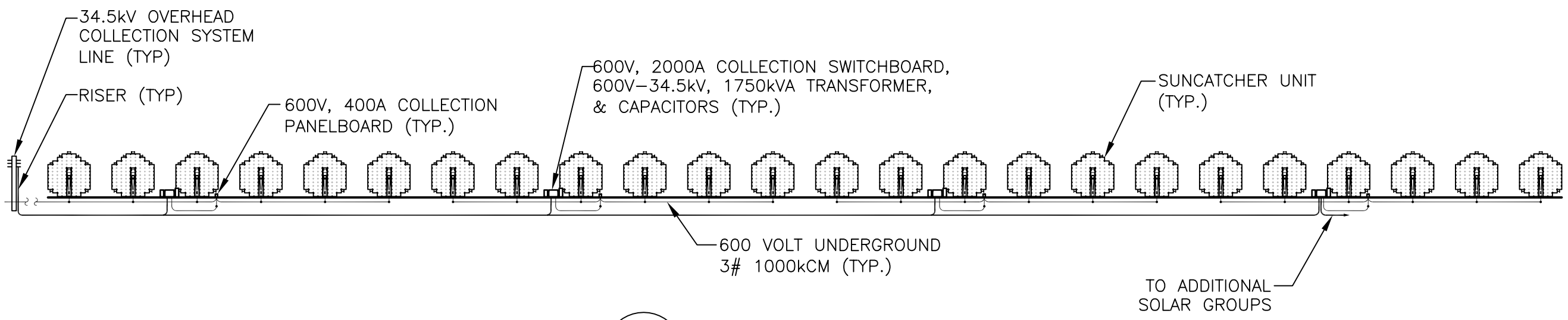

BB / – SECTION (LOOKING WEST)
(SUNCATCHER UNITS FACING EAST)
SCALE: 1"=100'

PRELIMINARY

NO.	DATE		BY	APP.
P1	04/23/07	ISSUED FOR PRELIMINARY REVIEW	PH	
P2	04/16/08	REV. CABLE TYPE & OH COLL.	PH	

STANTEC CONSULTING INC.
9400 S.W. BARNES ROAD
STE. 200
PORTLAND, OREGON, 97225
503.297.1631
STANTEC.COM

DRN. STC/GSP	DES. STC/PH	CHK. STC/	DATE 03/07/07
SCALE AS SHOWN		APP.	DATE

SOLAR TWO
TYPICAL ELEVATION VIEW
SOLAR TWO PROJECT

URS

CREATED BY: STANTEC	DATE: 06-11-08	FIG. NO: 3-14
PM: AL	PROJ. NO: 27657102.00300	

P:\Sys4\2000026801-Solar2\Exhibits\S2-G-0002-04.dwg, 4/16/2008 1:50:11 PM, slee

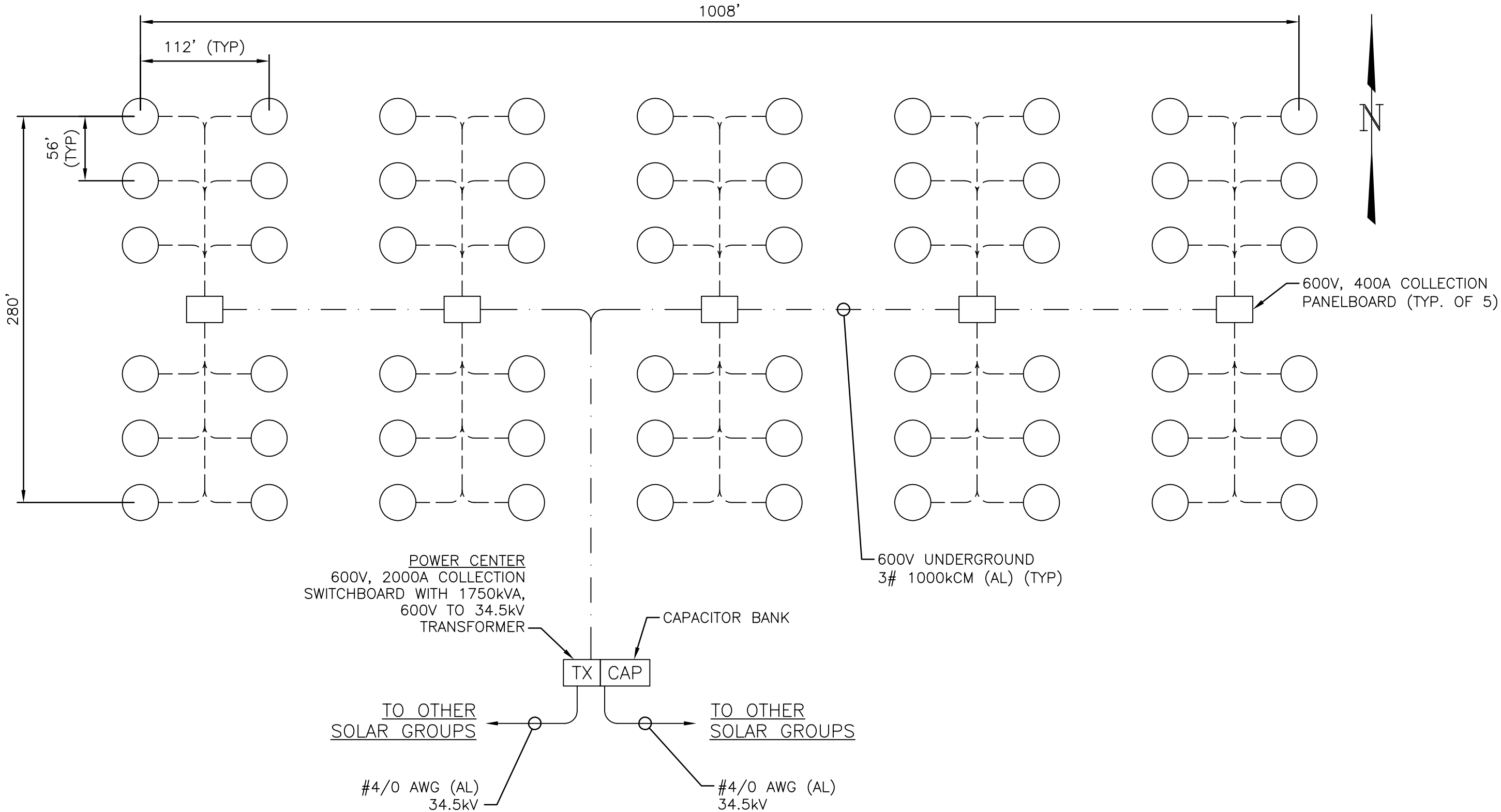

PRELIMINARY

NO.	DATE		BY	APP.
P1	04/23/07	ISSUED FOR PRELIMINARY REVIEW	PH	
P2	04/16/08	ISSUED FOR PRELIMINARY REVIEW	PH	

STANTEC CONSULTING INC.
9400 S.W. BARNES ROAD
STE. 200
PORTLAND, OREGON, 97225
503.297.1631
STANTEC.COM

DRN 01/23/07	DES. STC/GSP	CHK. STC/PH	DATE STC/
SCALE NONE		APP.	DATE

1.5-MW SOLAR GROUP ELECTRICAL ONE-LINE DIAGRAM, SHEET 1 SOLAR TWO PROJECT

URS

CREATED BY: STANTEC	DATE: 06-11-08	FIG. NO: 3-15
PM: AL	PROJ. NO: 27657102.00300	

P:\Sys4\2000026801-Solar2\Exhlbits\S2-E-0001-01.DWG, 4/16/2008 11:47:05 AM, slee

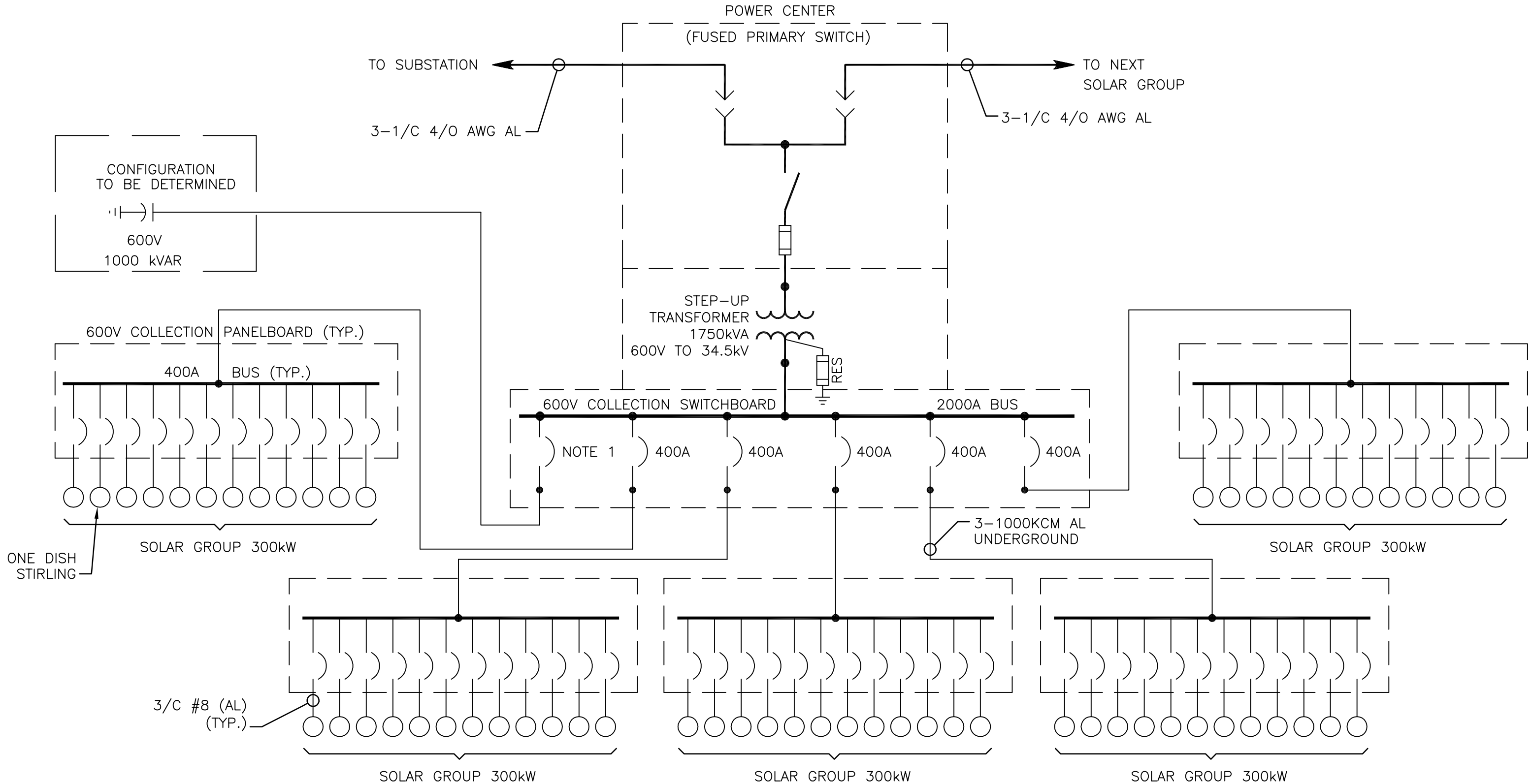

PRELIMINARY

NO.	DATE		BY	APP.
P1	04/23/07	ISSUED FOR PRELIMINARY REVIEW	PH	
P2	04/16/08	ISSUED FOR PRELIMINARY REVIEW	PH	

STANTEC CONSULTING INC.
9400 S.W. BARNES ROAD
STE. 200
PORTLAND, OREGON, 97225
503.297.1631
STANTEC.COM

DRN. STC/GSP	DES. STC/PH	CHK. STC/	DATE 01/23/07
SCALE NONE		APP.	DATE

1.5-MW SOLAR GROUP ELECTRICAL ONE-LINE DIAGRAM, SHEET 2
SOLAR TWO PROJECT

URS

CREATED BY: STANTEC	DATE: 06-11-08	FIG. NO: 3-16
PM: AL	PROJ. NO: 27657102.00300	

P:\Sys4\2000026801-Solar2\Exhibits\S2-E-0001-02.DWG, 4/16/2008 11:47:47 AM, slee

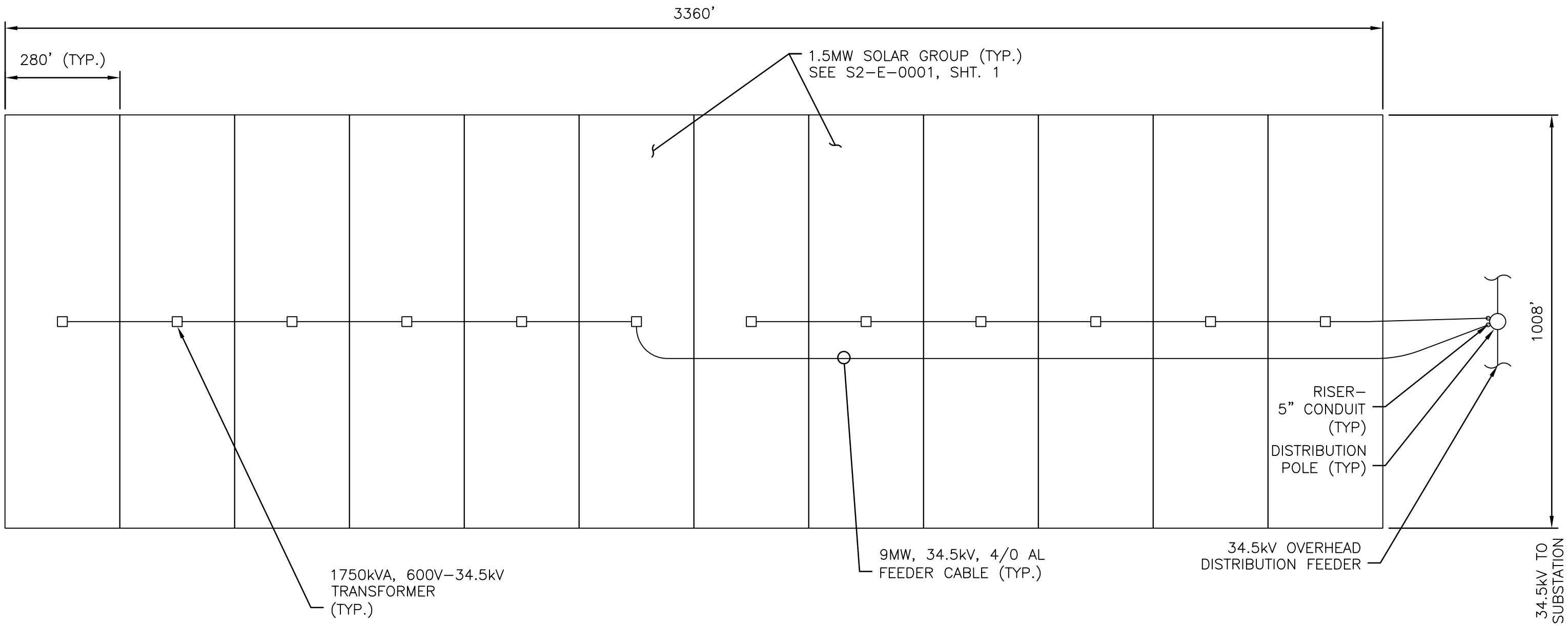

PRELIMINARY

NO.	DATE		BY	APP.
P1	04/23/07	ISSUED FOR PRELIMINARY REVIEW	PH	
P2	04/15/08	ISSUED FOR PRELIMINARY REVIEW	PH	

STANTEC CONSULTING INC.
9400 S.W. BARNES ROAD
STE. 200
PORTLAND, OREGON, 97225
503.297.1631
STANTEC.COM

DRN. STC/GSP	DES. STC/PH	CHK. STC/	DATE 01/22/07
SCALE 1"=240'		APP.	DATE

SOLAR TWO – 18-MW FEEDER GROUP
GENERAL ARRANGEMENT
SOLAR TWO PROJECT

URS

CREATED BY: STANTEC	DATE: 06-11-08	FIG. NO:
PM: AL	PROJ. NO: 27657102.00300	3-17

P:\Sys4\2000026801-Solar2\Exhibits\S2-E-0002-01.dwg, 4/16/2008 2:29:19 PM, slee

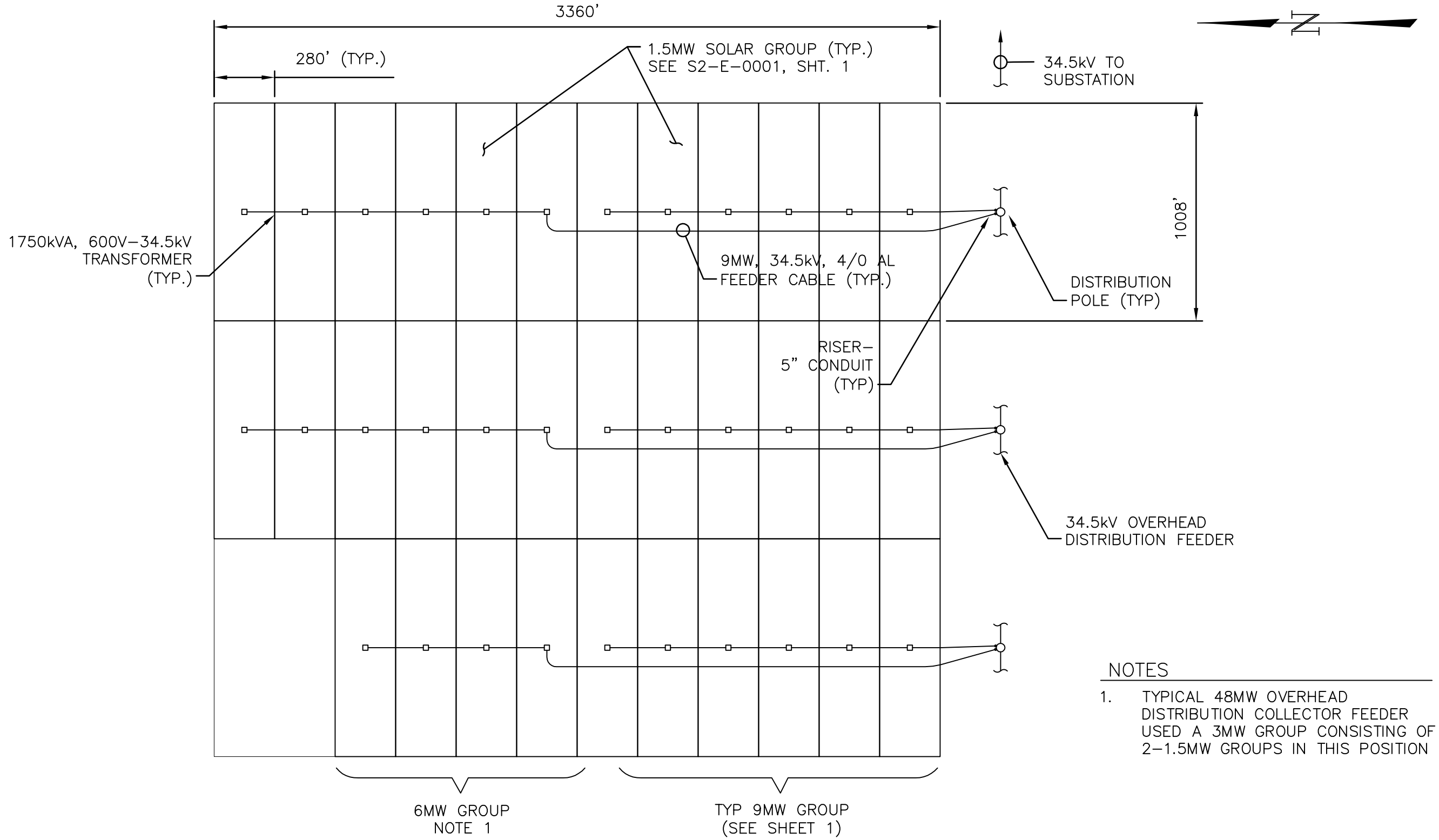

TYPICAL 51MW OVERHEAD DISTRIBUTION COLLECTOR FEEDER

NOTES

1. TYPICAL 48MW OVERHEAD DISTRIBUTION COLLECTOR FEEDER USED A 3MW GROUP CONSISTING OF 2-1.5MW GROUPS IN THIS POSITION

PRELIMINARY

NO.	DATE		BY	APP.
P1	04/16/08	ISSUED FOR PRELIMINARY REVIEW	PH	

STANTEC CONSULTING INC.
9400 S.W. BARNES ROAD
STE. 200
PORTLAND, OREGON, 97225
503.297.1631
STANTEC.COM

DRN. STC/SCL	DES. STC/PH	CHK. STC/	DATE 04/15/08
SCALE 1"=400'		APP.	DATE

SOLAR TWO – 51-MW FEEDER GROUP
GENERAL ARRANGEMENT
SOLAR TWO PROJECT

URS

CREATED BY: STANTEC	DATE: 06-11-08	FIG. NO:
PM: AL	PROJ. NO: 27657102.00300	3-18

P:\Sys4\2000026801-Solar2\Exhibits\S2-E-0002-02.dwg, 4/16/2008 2:12:24 PM, slee

FIGURE 3.4-13
Integrated Metal-Fin Pipe Foundation/Pedestal

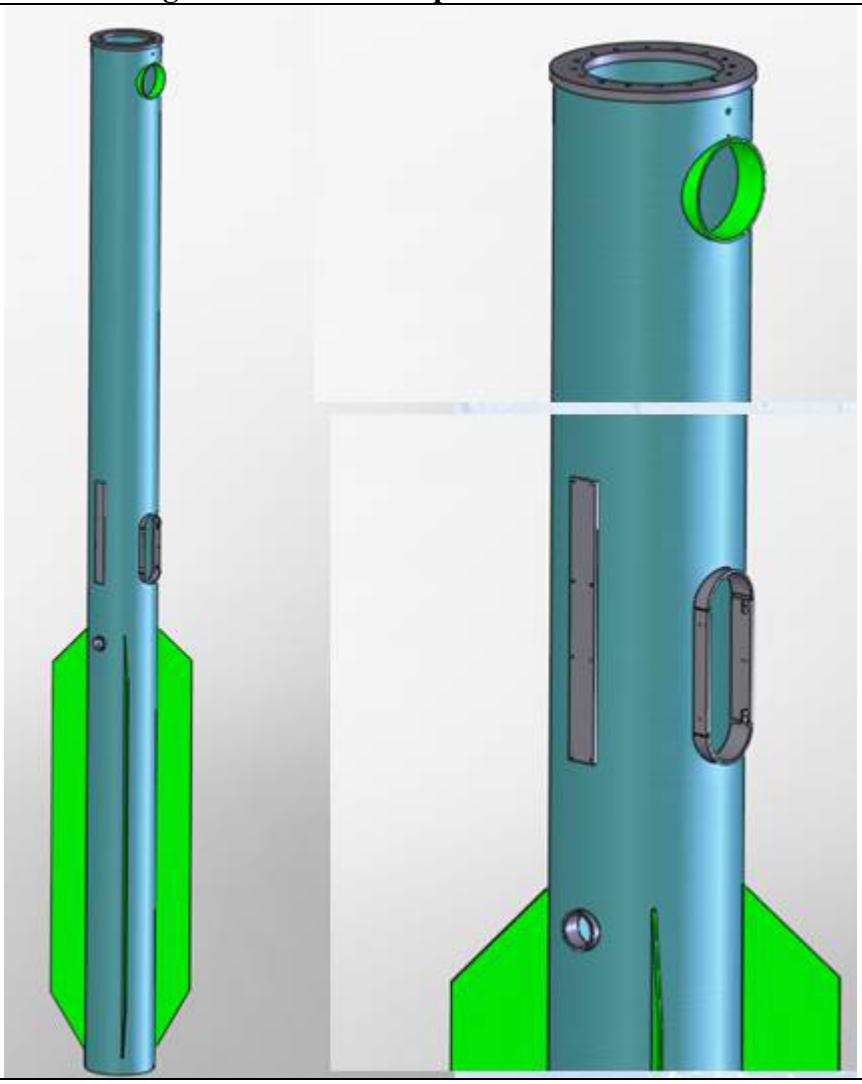

	INTEGRATED METAL FIN PIPE FOUNDATION/PEDESTAL SOLAR TWO PROJECT		
URS	CREATED BY: STANTEC	DATE: 06-11-08	FIG. NO: 3-19
	PM: AL	PROJ. NO: 27657102.00300	

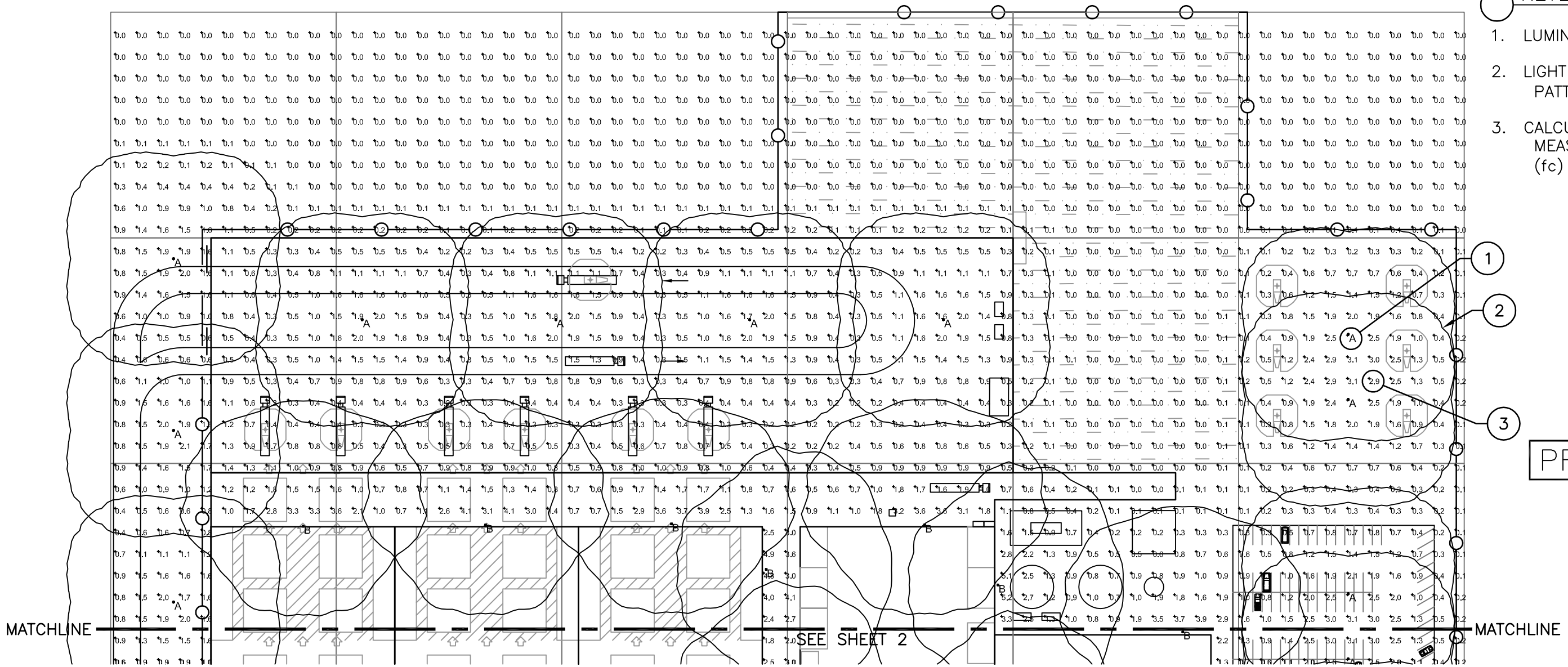

KEYED NOTES

1. LUMINAIRE TYPE (TYPICAL).
2. LIGHT FIXTURE DISTRIBUTION PATTERN (TYPICAL).
3. CALCULATED LIGHT LEVEL MEASURED IN FOOTCANDLES (fc) (TYPICAL).

PRELIMINARY

LUMINAIRE SCHEDULE

Symbol	Label	Qty	Catalog Number	Description	Lamp	File	Lumens	LLF	Watts
○	A	50	KVF 400S SYMFL/SSS27.5	SQUARE AREA LIGHT, SYMMETRIC DISTRIBUTION, FLAT LENS.	ONE 400-WATT CLEAR ED-18 HIGH PRESSURE SODIUM, VERTICAL BASE UP POSITION.	ltl9438.IES	50000	0.81	468
□	B	13	KSF2 400S R4W WM	ARM MOUNTED PREMIUM CUTOFF W/R4W REFL, CLEAR GLASS FLAT LENS.	ONE 400-WATT CLEAR ET-18 HIGH PRESSURE SODIUM, HORIZONTAL POSITION.	Ltl8506.IES	50000	0.81	468

STATISTICS

Description	Symbol	Avg	Max	Min	Max/Min	Avg/Min
ENTIRE SITE	+	0.8 fc	5.5 fc	0.0 fc	N / A	N / A

PRELIMINARY

NO.	DATE		BY	APP.
P1	04/23/07	ISSUED FOR PRELIMINARY REVIEW	PH	
P2	04/16/08	REVISED ADMIN. & MAINT. BUILDINGS FOR 750MW	PH	

STANTEC CONSULTING INC.
9400 S.W. BARNES ROAD
STE. 200
PORTLAND, OREGON, 97225
503.297.1631
STANTEC.COM

DRN. STC/GSP	DES. STC/PH	CHK. STC/	DATE 03/06/07
SCALE 1"=100'		APP.	DATE

MAIN SERVICES COMPLEX LIGHTING
SITE PLAN – PART A
SOLAR TWO PROJECT

URS

CREATED BY: STANTEC	DATE: 06-11-08	FIG. NO: 3-20
PM: AL	PROJ. NO: 27657102.00300	

P:\Sys4\2000026801-Solar2\Exhibits\S2-E-0100-01.dwg, 4/16/2008 12:49:18 PM, slee

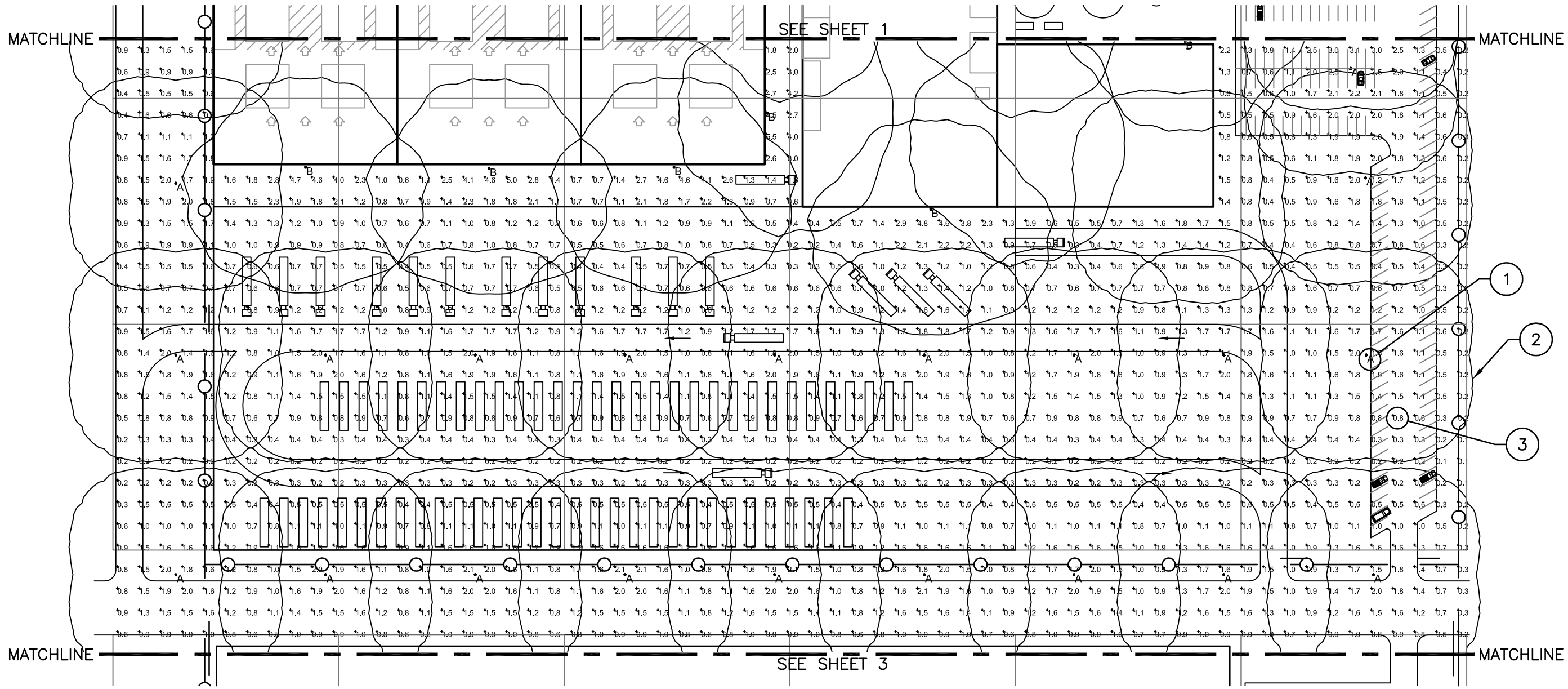

KEYED NOTES

1. LUMINAIRE TYPE (TYPICAL).
2. LIGHT FIXTURE DISTRIBUTION PATTERN (TYPICAL).
3. CALCULATED LIGHT LEVEL MEASURED IN FOOTCANDLES (fc) (TYPICAL).

PRELIMINARY

NO.	DATE		BY	APP.
P1	04/23/07	ISSUED FOR PRELIMINARY REVIEW	PH	
P2	04/16/08	REVISED ADMIN. & MAINT. BUILDINGS FOR 750MW	PH	

STANTEC CONSULTING INC.
9400 S.W. BARNES ROAD
STE. 200
PORTLAND, OREGON, 97225
503.297.1631
STANTEC.COM

DRN. STC/GSP	DES. STC/PH	CHK. STC/	DATE 03/06/07
SCALE 1"=100'		APP.	DATE

MAIN SERVICES COMPLEX LIGHTING
SITE PLAN – PART B
SOLAR TWO PROJECT

URS

CREATED BY: STANTEC	DATE: 06-11-08	FIG. NO:
PM: AL	PROJ. NO: 27657102.00300	3-21

P:\Sys4\2000026801-Solar2\Exhibits\S2-E-0100-02.dwg, 4/16/2008 12:50:11 PM, slee

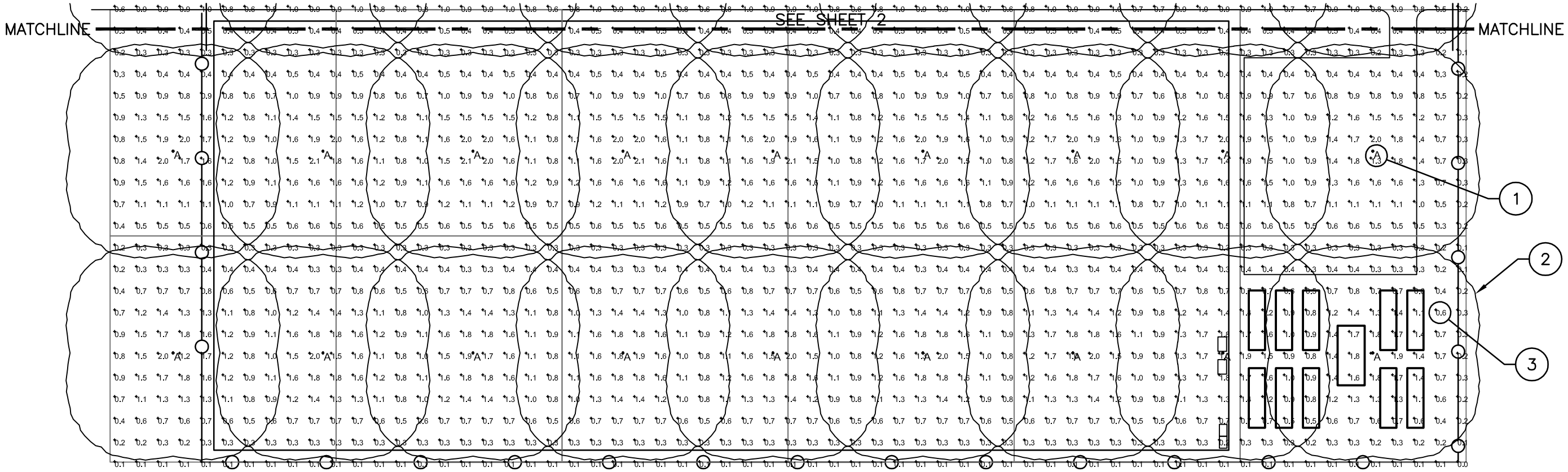

KEYED NOTES

1. LUMINAIRE TYPE (TYPICAL).
2. LIGHT FIXTURE DISTRIBUTION PATTERN (TYPICAL).
3. CALCULATED LIGHT LEVEL MEASURED IN FOOTCANDLES (fc) (TYPICAL).

PRELIMINARY

NO.	DATE		BY	APP.
P1	04/23/07	ISSUED FOR PRELIMINARY REVIEW	PH	
P2	04/16/08	REISSUED	PH	

STANTEC CONSULTING INC.
9400 S.W. BARNES ROAD
STE. 200
PORTLAND, OREGON, 97225
503.297.1631
STANTEC.COM

DRN. STC/GSP	DES. STC/PH	CHK. STC/	DATE 03/06/07
SCALE 1"=100'		APP.	DATE

MAIN SERVICES COMPLEX LIGHTING
SITE PLAN – PART C
SOLAR TWO PROJECT

URS

CREATED BY: STANTEC	DATE: 06-11-08	FIG. NO:
PM: AL	PROJ. NO: 27657102.00300	3-22

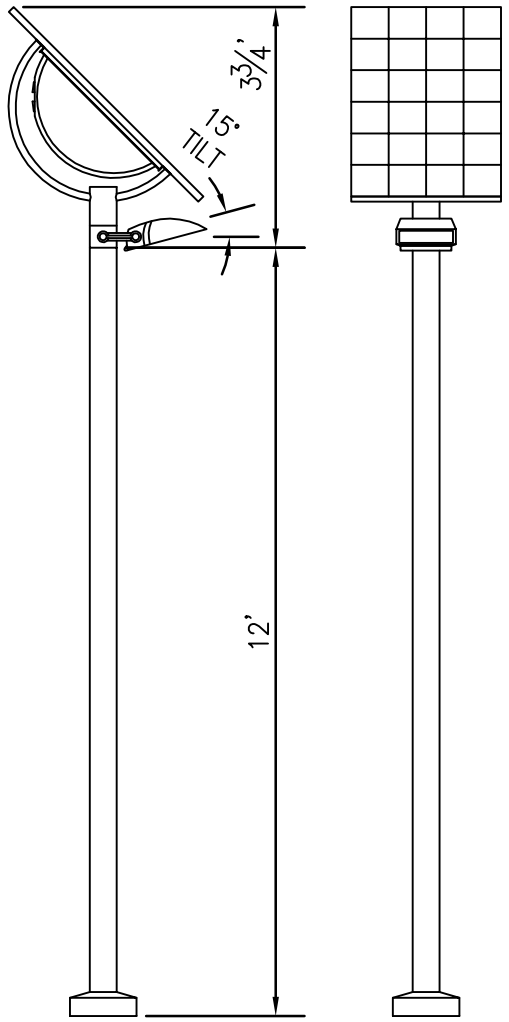

2A
–

TYPICAL SELF–POWERED LAMP
SE'LUX SONNELITER SERIES SDS2
SCALE: 1"=3'–0"

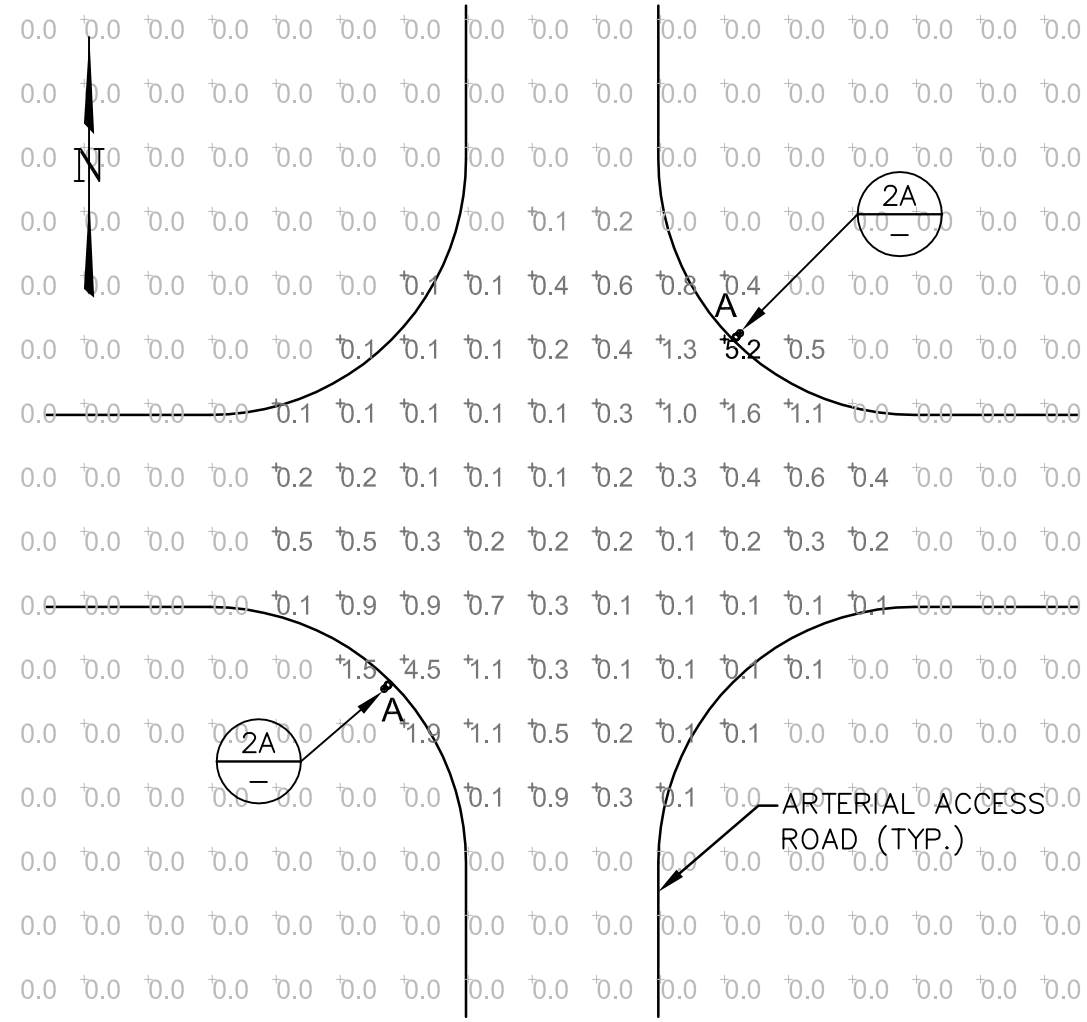

–
–

TYPICAL 4–WAY INTERSECTION LIGHTING
SCALE: 1"=30'

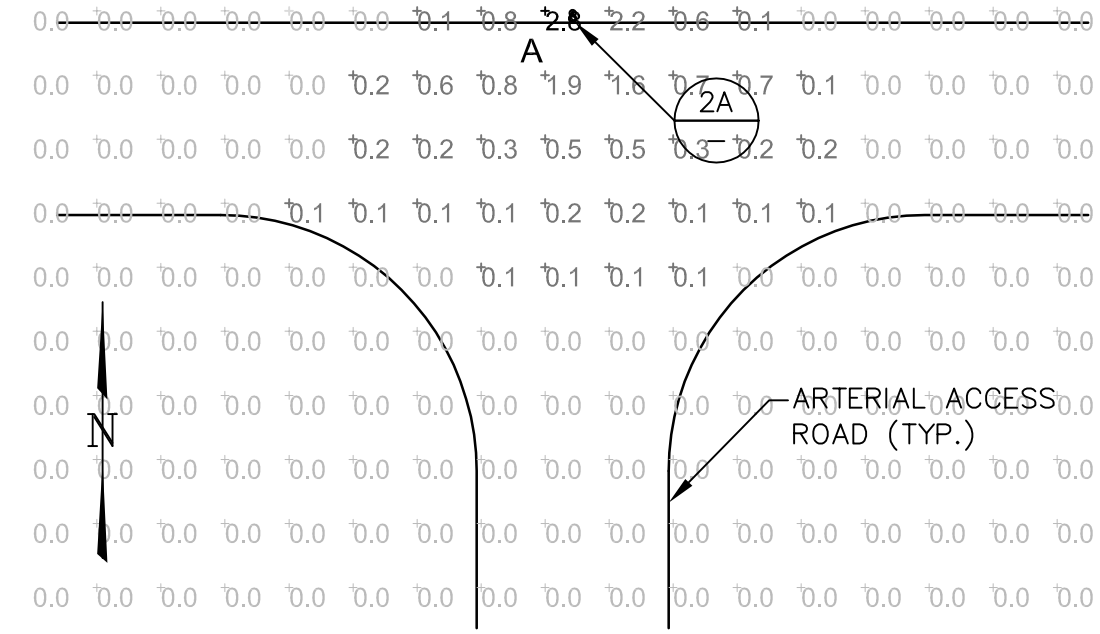

–
–

TYPICAL 3–WAY INTERSECTION LIGHTING
SCALE: 1"=30'

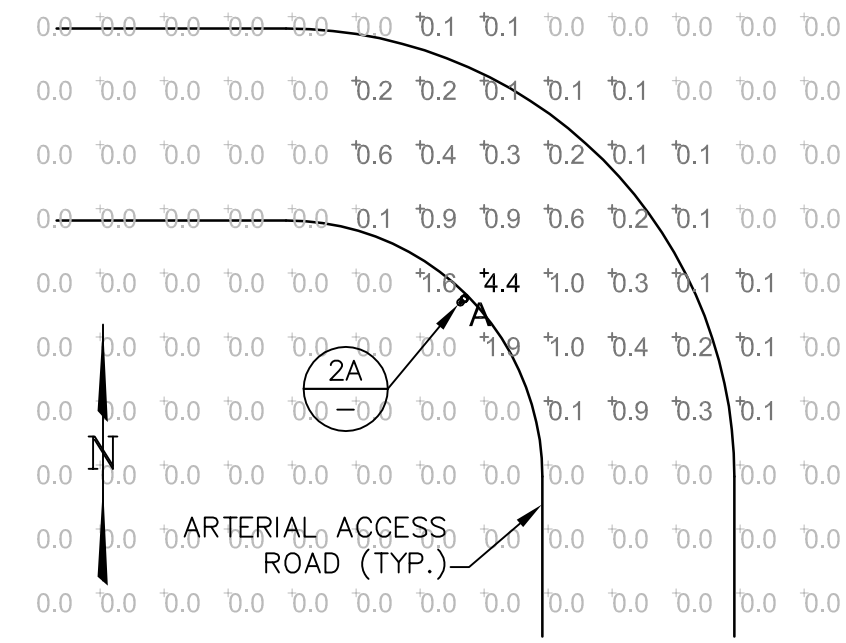

–
–

TYPICAL CURVE LIGHTING
SCALE: 1"=30'

PRELIMINARY

LUMINAIRE SCHEDULE

SYMBOL	LABEL	QTY	CATALOG NUMBER	DESCRIPTION	LAMP	FILE	LUMENS	LLF	WATTS
	A	4	SDS2 9T H035T6 (SonneLITER)	CAST ALUMINUM FIXTURE SEGMENTED REFLECTOR.	TESTED WITH ONE 70–WATT T6 CERAMIC METAL HALIDE, G12 BASE, RATED 6600 INITIAL LUMENS EACH.	SDS2–9T–H035T6.IES	3400	1.00	88

FIGURE 3.4–28

NO.	DATE		BY	APP.
P1	04/23/07	ISSUED FOR PRELIMINARY REVIEW	PH	

STANTEC CONSULTING INC.
9400 S.W. BARNES ROAD
STE. 200
PORTLAND, OREGON, 97225
503.297.1631
STANTEC.COM

DRN. STC/GSP	DES. STC/PH	CHK. STC/	DATE 04/02/07
SCALE NONE		APP.	DATE

TYPICAL ROADWAY LIGHTING AND PHOTOMETRIC DETAILS SOLAR TWO PROJECT

URS

CREATED BY: STANTEC	DATE: 06-11-08	FIG. NO: 3-23
PM: AL	PROJ. NO: 27657102.00300	

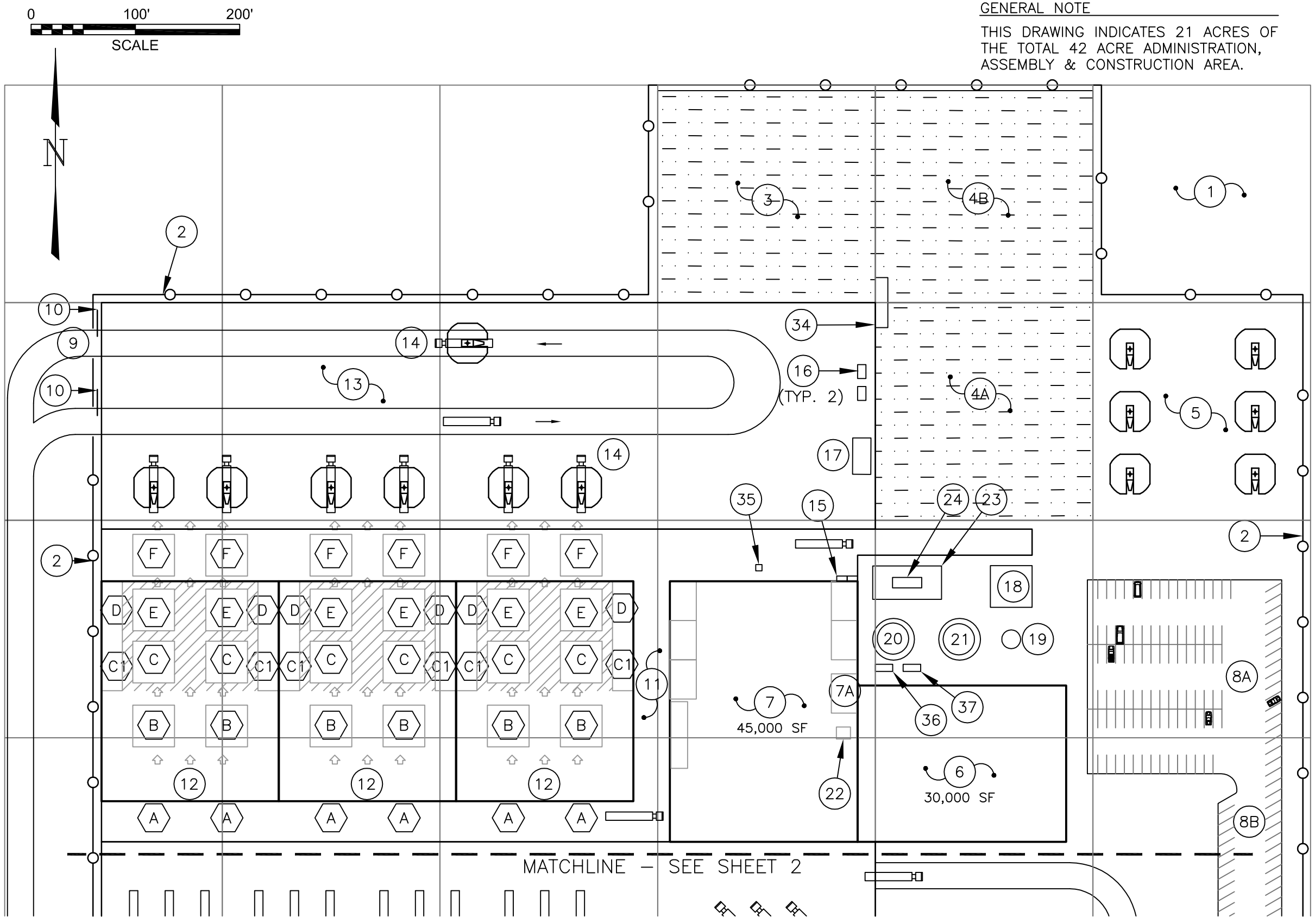

GENERAL NOTE

THIS DRAWING INDICATES 21 ACRES OF THE TOTAL 42 ACRE ADMINISTRATION, ASSEMBLY & CONSTRUCTION AREA.

KEYED NOTES

1. 1 ACRE SECTION (TYP. FOR ALL)
2. PERIMETER FENCE
3. 1 ACRE RETENTION PONDS
4A. 1 ACRE CONCRETE LINED EVAPORATION POND
4B. 1 ACRE CONCRETE LINED EVAPORATION POND
5. CSP DISH DISPLAY/VISITOR AREA
6. ADMINISTRATION BLDG. (200'Wx150'L)
7. 44' TALL MAINTENANCE BLDG. (180'Wx250'L)
7A. CHEMICAL STORAGE AREA
8A. EMPLOYEE PARKING LOT, PAVED (185'Wx185'L)
8B. EMPLOYEE PARKING LOT, PAVED (60'Wx340'L)
9. ON–SITE ROAD, PAVED
10. ACCESS GATE
11. CSP DISH ASSEMBLY BAY, CONCRETE PAD (300'Wx725'L)
12. ASSEMBLY BUILDING 170'Wx211'Lx77'–7"H (TYP. OF 3)
13. PAVED AREA FOR ASSEMBLED DISH TRANSPORT & MAINTENANCE/DISH WASHING VEHICLES (620'Wx220'L)
14. TRUCK CAB W/ TRAILER OR FLAT BED (TYP. FOR ALL)
15. (2) 8 CU. YD. DUMPSTERS
16. 5000 GALLON FUEL STORAGE (W/ CONTAINMENT) FOR ON–SITE VEHICLES (8' DIAx13'–4"L)
17. STORAGE AREA FOR 100 HYDROGEN BOTTLES (15'Wx75'L)
18. 40'Wx40'L WATER TREATMENT AREA WITH PROT. ROOF.
19. POTABLE WATER TANK FED BY 2" WATER LINE (18' DIAx10' TALL)
20. FIRE PROTECTION/MIRROR WASHING WATER TANK (40' DIAx20' TALL)
21. RAW WATER TANK (40' DIAx20' TALL)
22. 150 GALLON LUBRICATING OIL RECYCLING TANK.
23. ALTERNATE 1: ABOVE GROUND 10,000 GALLON/DAY CAPACITY WASTE WATER TREATMENT FACILTY (66'–0"L x 32'–0"W)
24. ALTERNATE 2: BELOW GROUND 10,000 GALLON SEWAGE HOLDING TANK (20'L x 10'W x 8'H)
34. BACKHOE ACCESS RAMP
35. ELECTRIC SERVICE TRANSFORMER
36. DIESEL FIRE PUMP
37. DIESEL STANDBY ELECTRIC GENERATOR

CSP DISH ASSEMBLY PATH

A. PARTS STORAGE AREA
B. STRUCTURE ASSEMBLY AREA
C. MIRROR ASSEMBLY AREA
C1. MIRROR ASSEMBLY STAGING AREA
D. TESTING AREA
E. CALIBRATION AREA
F. COMPLETED ASSEMBLY TRANSPORT AREA

PRELIMINARY

NO.	DATE		BY	APP.
P1	04/23/07	ISSUED FOR PRELIMINARY REVIEW	PH	
P2	07/17/07	ADDED NORTH ARROW, SCALE	PH	
P3	04/08/08	REVISED ADMIN. & MAINT. BUILDINGS FOR 600MW;		
		REMOVED WEATHER STATION/NIP TRACKER	PH	
P4	04/16/08	REISSUED MAINT. BUILDING FOR 750MW	PH	

STANTEC CONSULTING INC.
9400 S.W. BARNES ROAD
STE. 200
PORTLAND, OREGON, 97225
503.297.1631
STANTEC.COM

DRN. STC/GSP	DES. STC/PH	CHK. STC/	DATE 03/06/07
SCALE 1"=100'		APP.	DATE

MAIN SERVICES COMPLEX
SITE PLAN – PART A
SOLAR TWO PROJECT

URS

CREATED BY: STANTEC	DATE: 06-11-08	FIG. NO: 3-24
PM: AL	PROJ. NO: 27657102.00300	

P:\Sys4\2000026801-Solar2\Exhibits\S2-G-0100-01.dwg, 4/16/2008 12:44:37 PM, slee

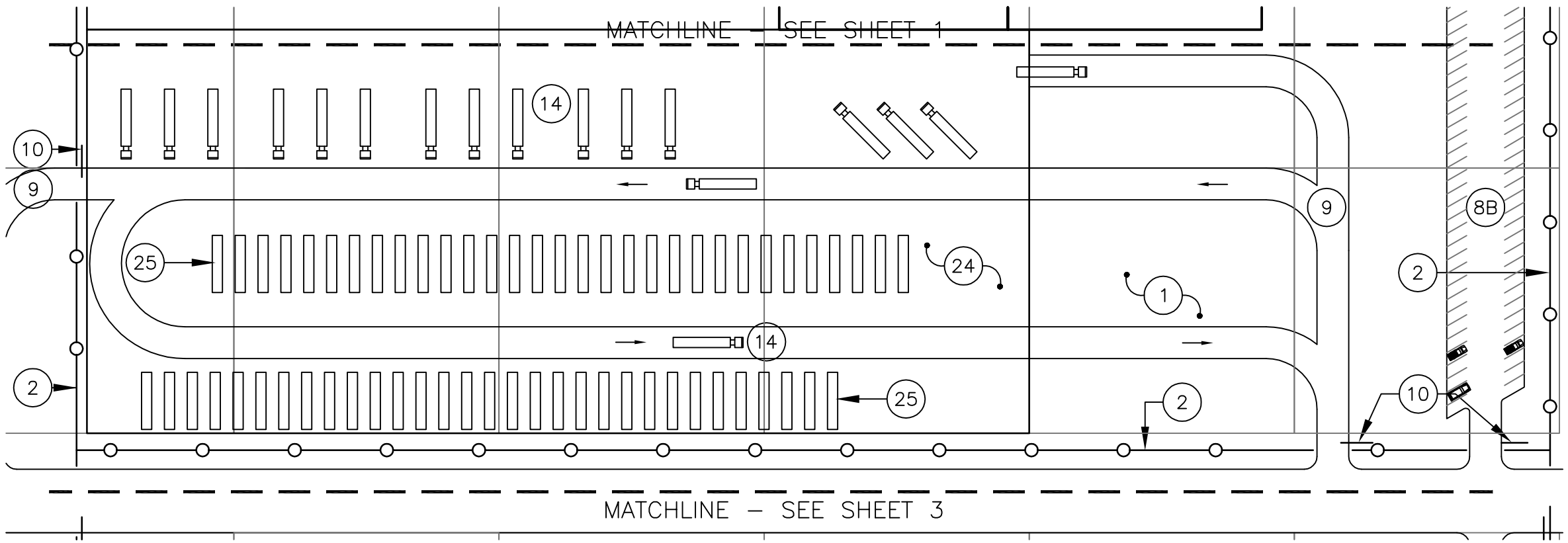

GENERAL NOTE

THIS DRAWING INDICATES 7 ACRES OF THE TOTAL 42 ACRE ADMINISTRATION, ASSEMBLY & CONSTRUCTION AREA.

KEYED NOTES

1. 1 ACRE SECTION (TYP. FOR ALL)
2. PERIMETER FENCE
8B. EMPLOYEE PARKING LOT, PAVED (60'Wx340'L)
9. ON–SITE ROAD, PAVED
10. ACCESS GATE
14. TRUCK CAB W/ TRAILER OR FLAT BED (TYP. FOR ALL)
24. PAVED AREA FOR DISH SUB–ASSEMBLY & COMPONENT DROP OFF AND OPERATIONS & MAINTENANCE SUPPLIES
25. ASSEMBLY PARTS TRAILER STORAGE AREA
26. SITE ARTERIAL ROAD

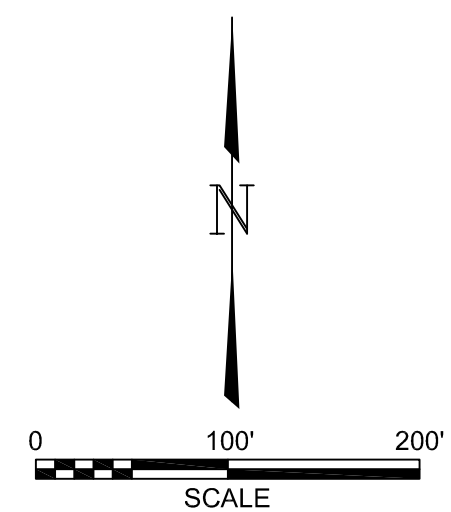

PRELIMINARY

NO.	DATE		BY	APP.
P1	04/23/07	ISSUED FOR PRELIMINARY REVIEW	PH	
P2	07/17/07	ADDED NORTH ARROW, SCALE	PH	
P3	04/16/08	REISSUED	PH	

STANTEC CONSULTING INC.
9400 S.W. BARNES ROAD
STE. 200
PORTLAND, OREGON, 97225
503.297.1631
STANTEC.COM

DRN. STC/GSP	DES. STC/PH	CHK. STC/	DATE 03/06/07
SCALE 1"=100'		APP.	DATE

MAIN SERVICES COMPLEX
SITE PLAN – PART B
SOLAR TWO PROJECT

URS

CREATED BY: STANTEC	DATE: 06-11-08	FIG. NO: 3-25
PM: AL	PROJ. NO: 27657102.00300	

P:\Sys4\2000026801-Solar2\Exhlblts\S2-G-0100-02.dwg, 4/16/2008 11:43:28 AM, slee

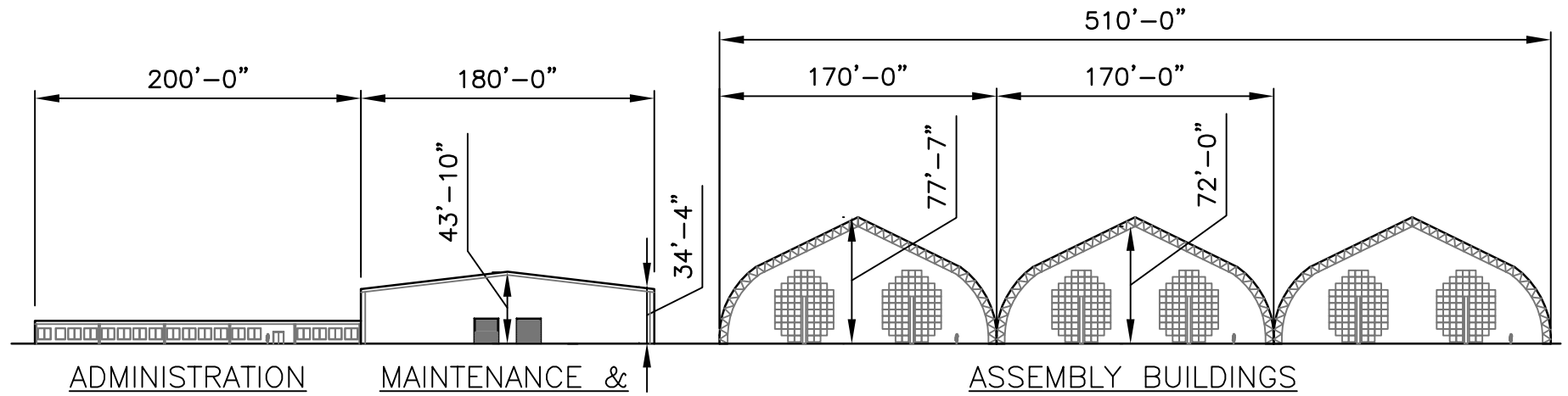

1 — NORTH ELEVATION
SCALE: 1"=100'–0"

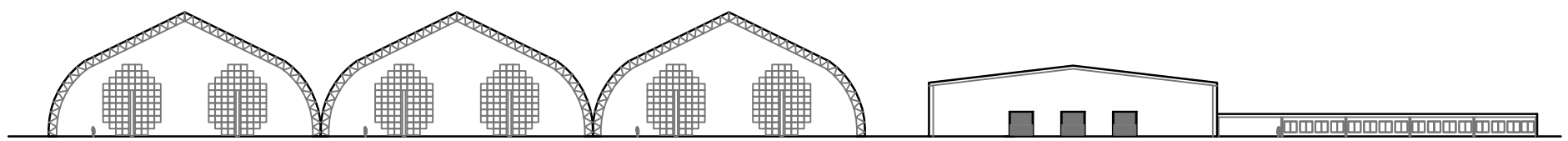

2 — SOUTH ELEVATION
SCALE: 1"=100'–0"

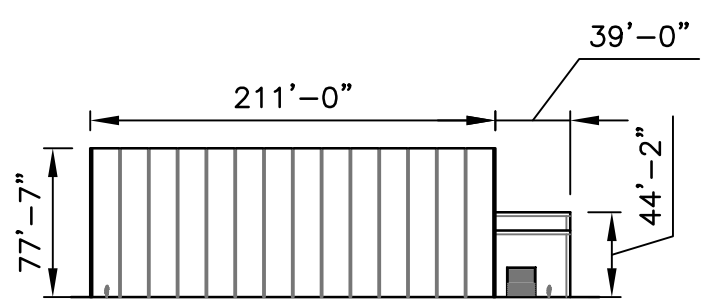

3 — WEST ELEVATION
SCALE: 1"=100'–0"

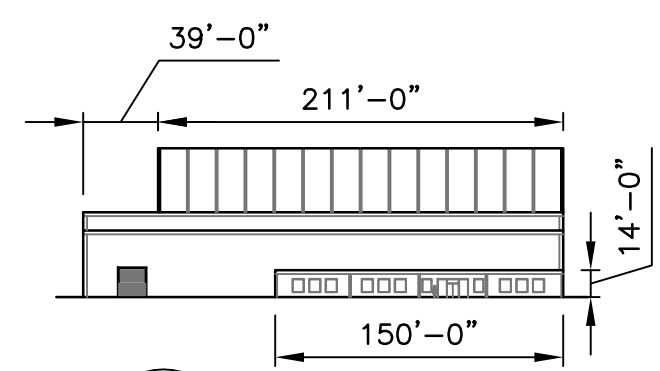

4 — EAST ELEVATION
SCALE: 1"=100'–0"

PRELIMINARY

NO.	DATE		BY	APP.
P1	04/23/07	ISSUED FOR PRELIMINARY REVIEW	PH	
P2	04/08/08	REVISED ADMIN. & MAINT. BUILDINGS FOR 600MW	PH	
P3	04/16/08	REVISED MAINT. BUILDING FOR 750MW	PH	

STANTEC CONSULTING INC.
9400 S.W. BARNES ROAD
STE. 200
PORTLAND, OREGON, 97225
503.297.1631
STANTEC.COM

DRN. STC/GSP	DES. STC/PH	CHK. STC/	DATE 01/23/07
SCALE 1"=100'		APP.	DATE

MAIN SERVICES COMPLEX
ELEVATION VIEW
SOLAR TWO PROJECT

URS

CREATED BY: STANTEC	DATE: 06-11-08	FIG. NO: 3-26
PM: AL	PROJ. NO: 27657102.00300	

P:\Sys4\2000026801-Solar2\Exhibits\S2-G-0100-04.dwg, 4/16/2008 12:45:27 PM, slee

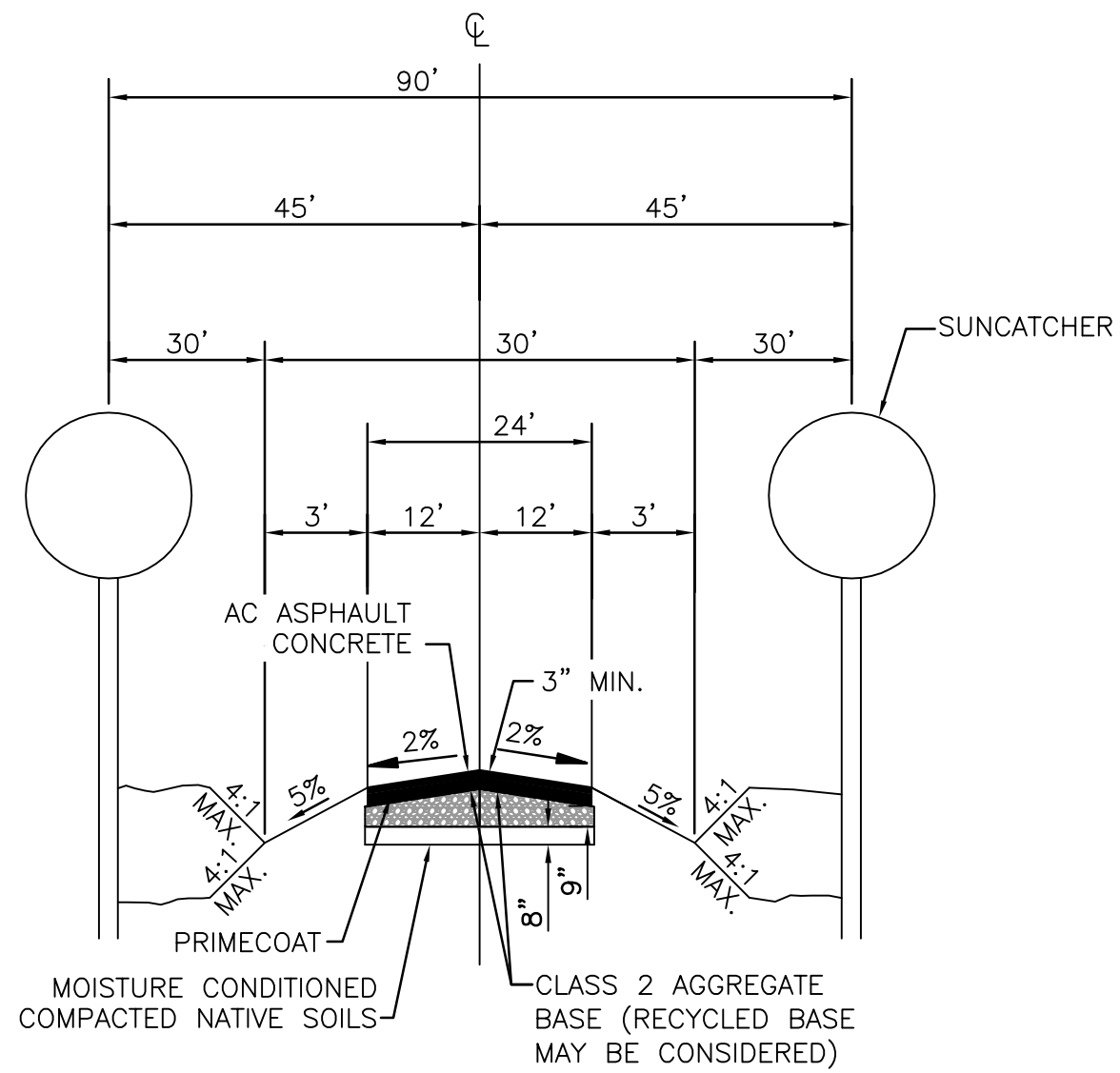

ARTERIAL ROADS (TYPICAL)

(N.T.S.)

NOTE

THIS SECTION IS BASED ON IMPERIAL COUNTY PUBLIC WORKS DEPARTMENT (EL CENTRO) DWG. NO. COUNTY 430. WITH STRUCTURAL SECTION BASED ON DWG. NO. COUNTY–440.

PRELIMINARY

NO.	DATE		BY	APP.
P1	04/23/07	ISSUED FOR PRELIMINARY REVIEW	PH	
P2	04/16/08	RE–ISSUED FOR REVIEW	PH	

STANTEC CONSULTING INC.
9400 S.W. BARNES ROAD
STE. 200
PORTLAND, OREGON, 97225
503.297.1631
STANTEC.COM

DRN. STC/GSP	DES. STC/PH	CHK. STC/	DATE 01/23/07
SCALE NONE		APP.	DATE

PAVED ARTERIAL ROADS
SOLAR TWO PROJECT

URS

CREATED BY: STANTEC	DATE: 06-11-08	FIG. NO: 3-27
PM: AL	PROJ. NO: 27657102.00300	

P:\Sys4\2000026801-Solar2\Exhlblts\S2-C-0001-01.dwg, 4/16/2008 2:57:15 PM, slee

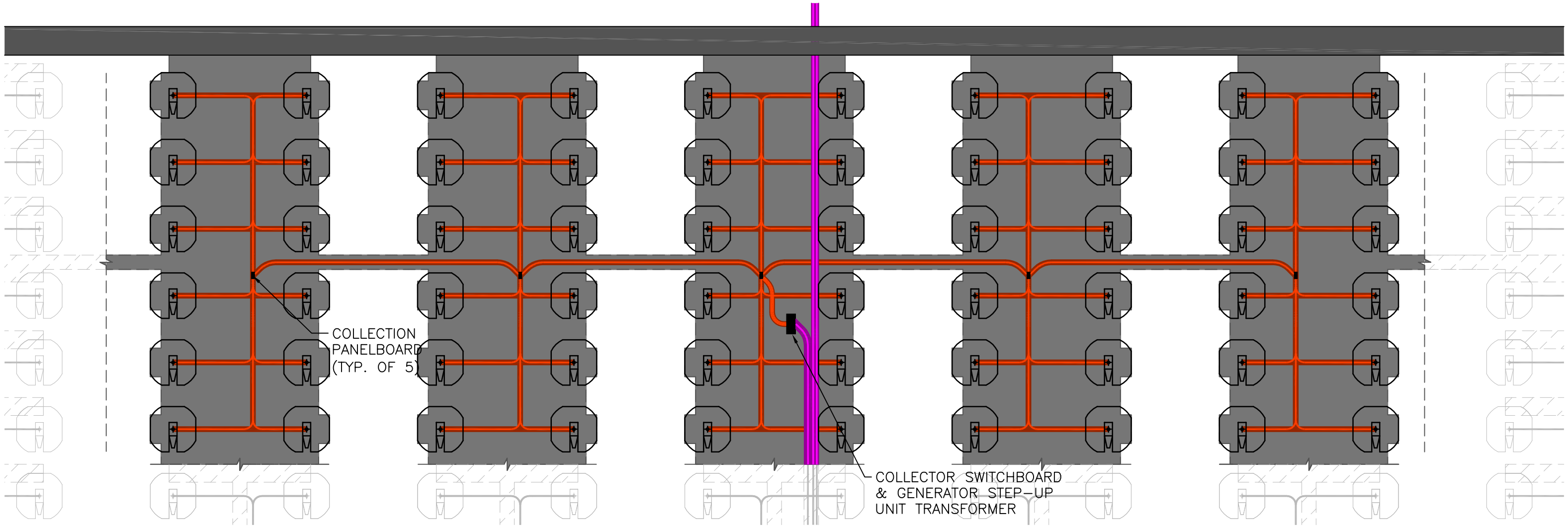

N

0 80' 160'
SCALE

LEGEND

- UNPAVED ACCESS ROUTE
- PAVED ROADWAYS
- SUNCATCHER UNIT
- 600V COLLECTOR CABLE WITH 4' BUFFER
- 34.5kV CABLE WITH 12' BUFFER

NOTES

1. THIS IS A REPRESENTATION OF A 1.5MW SOLAR GROUP. THE 1.5MW SOLAR GROUPS WILL BE ARRANGED TO FIT THE CONTOURS OF THE SITE.
2. ONE 1.5MW SOLAR GROUP IS COMPRISED OF SIXTY (60) SUNCATCHER UNITS CONNECTED INTO FIVE (5) TWELVE-UNIT GROUPS CONNECTED TO A 600V, 400A COLLECTION PANELBOARD.

PRELIMINARY

NO.	DATE		BY	APP.
P1	07/30/07	ISSUED FOR PRELIMINARY REVIEW	PH	
P2	02/27/08	RELOCATED ACCESS ROUTE	PH	
P3	04/16/08	RELOCATED ACCESS ROUTE	PH	

STANTEC CONSULTING INC.
9400 S.W. BARNES ROAD
STE. 200
PORTLAND, OREGON, 97225
503.297.1631
STANTEC.COM

DRN. STC/GSP	DES. STC/PH	CHK. STC/	DATE 07/30/07
SCALE 1"=80'-0"		APP.	DATE

1.5-MW SOLAR TWO CONSTRUCTION DISTURBANCE PLAN
SOLAR TWO PROJECT

URS

CREATED BY: STANTEC	DATE: 06-11-08	FIG. NO: 3-28
PM: AL	PROJ. NO: 27657102.00300	

P:\Sys4\2000026801-Solar2\Exhibits\S2-G-0005-01.dwg, 4/16/2008 11:48:17 AM, slee

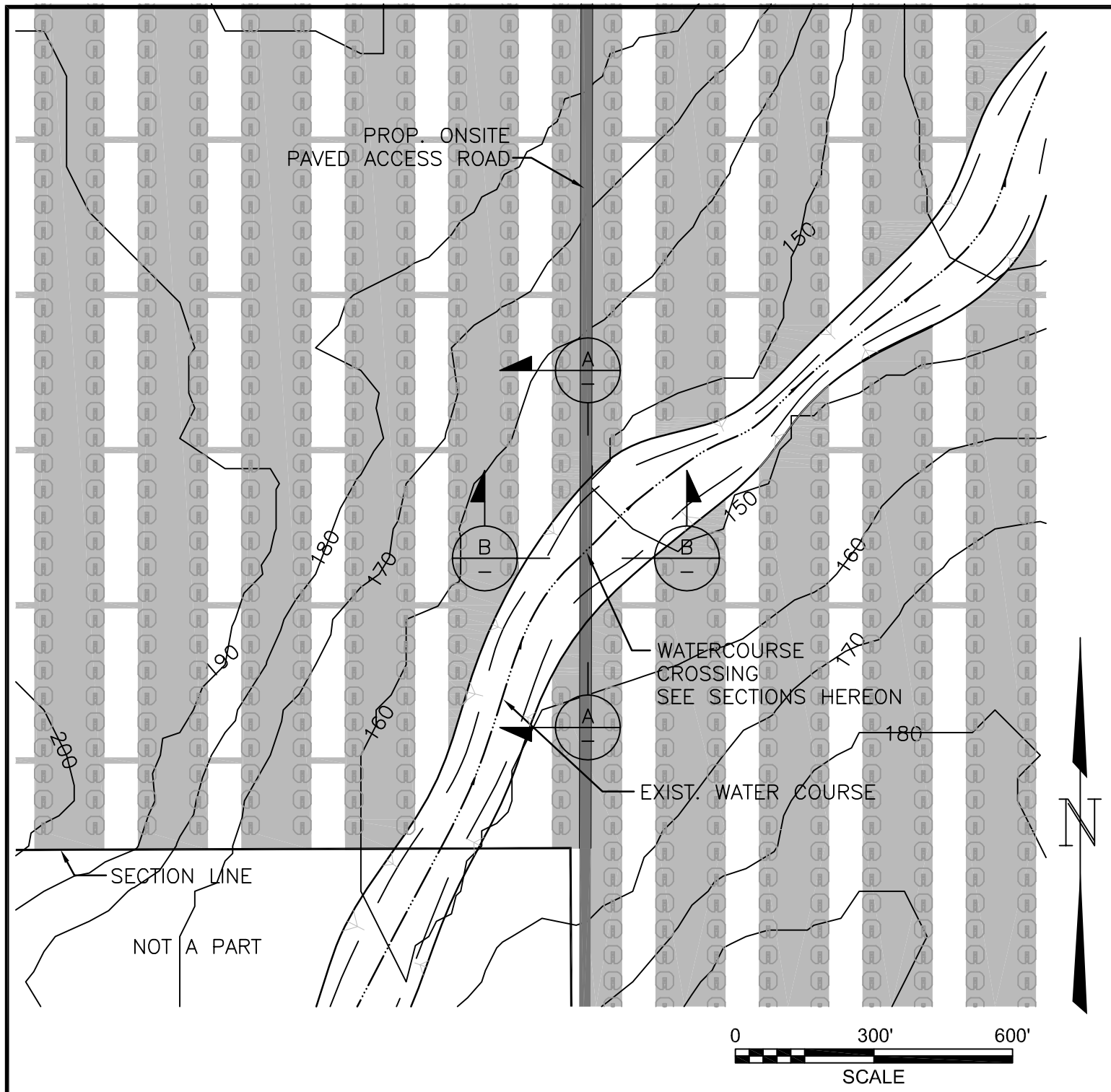

LEGEND

- BRUSH TRIMMING
- PAVED ROADWAYS
- SUNCATCHER UNIT
- EXIST. WATER COURSE

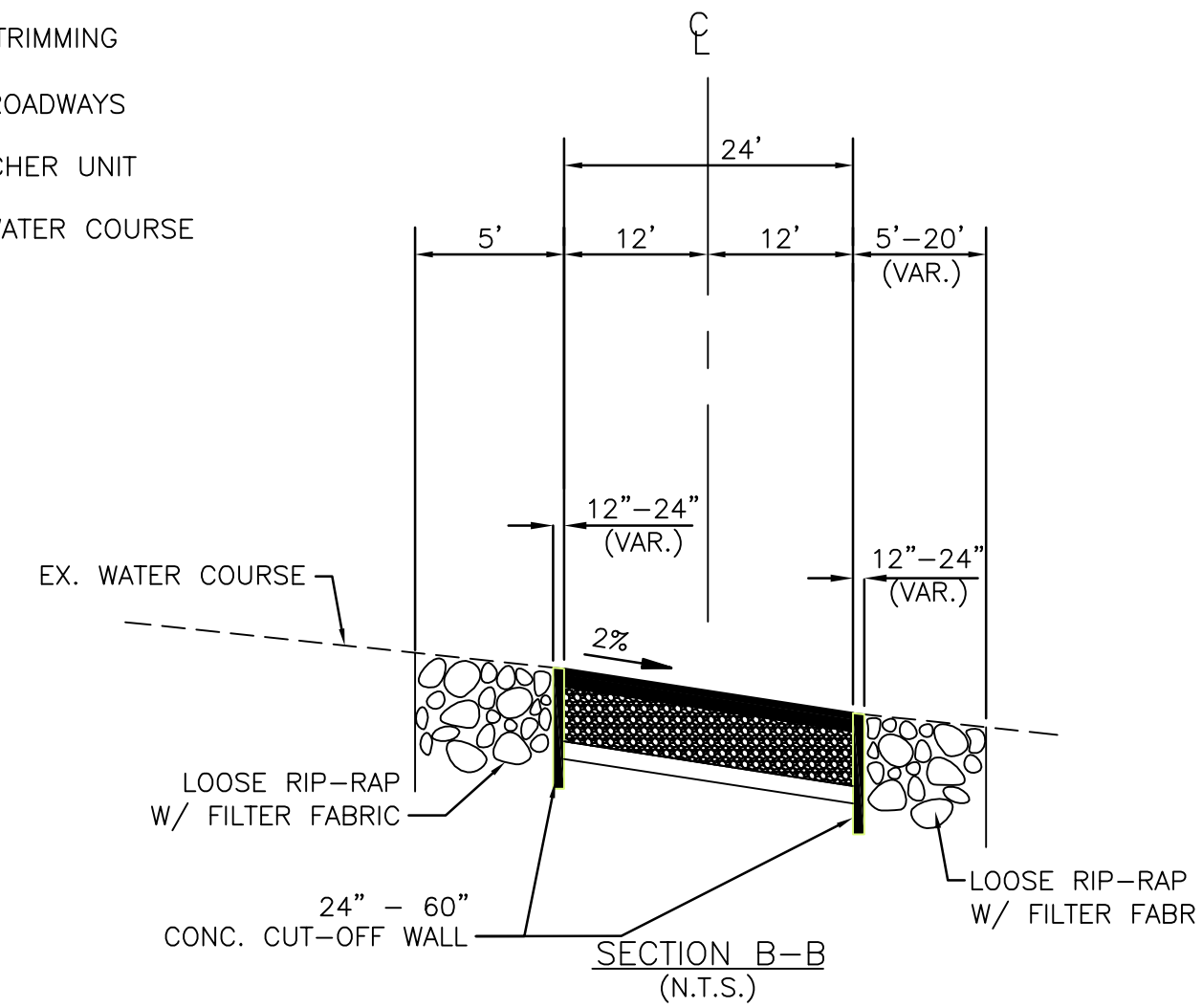

SECTION B–B
(N.T.S.)

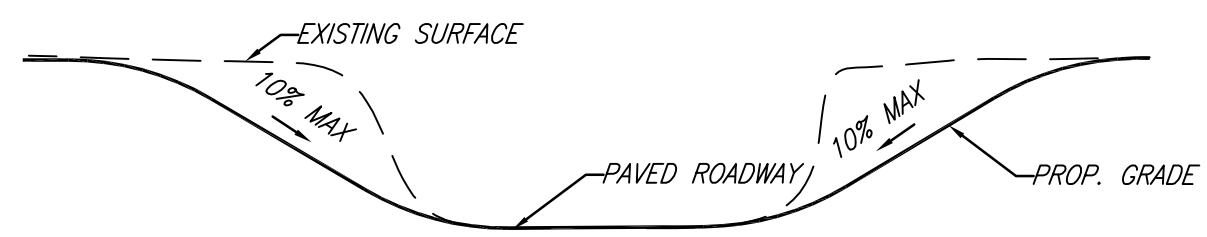

SECTION A–A
(N.T.S.)

PRELIMINARY

NO.	DATE		BY	APP.
P1	04/23/07	ISSUED FOR PRELIMINARY REVIEW	PH	
P2	07/30/07	CHANGED 'CLEARING' REFERENCE TO 'TRIMMING'	PH	
P3	04/16/08	RE–ISSUED FOR REVIEW	PH	

STANTEC CONSULTING INC.
9400 S.W. BARNES ROAD
STE. 200
PORTLAND, OREGON, 97225
503.297.1631
STANTEC.COM

DRN. STC/GSP	DES. STC/PH	CHK. STC/	DATE 01/23/07
SCALE NONE		APP.	DATE

ARIZONA CROSSING
SOLAR TWO PROJECT

URS

CREATED BY: STANTEC	DATE: 06-11-08	FIG. NO: 3-29
PM: AL	PROJ. NO: 27657102.00300	

P:\Sys4\2000026801-Solar2\Exhibits\S2-C-0016-01.dwg, 4/16/2008 2:56:05 PM, slee

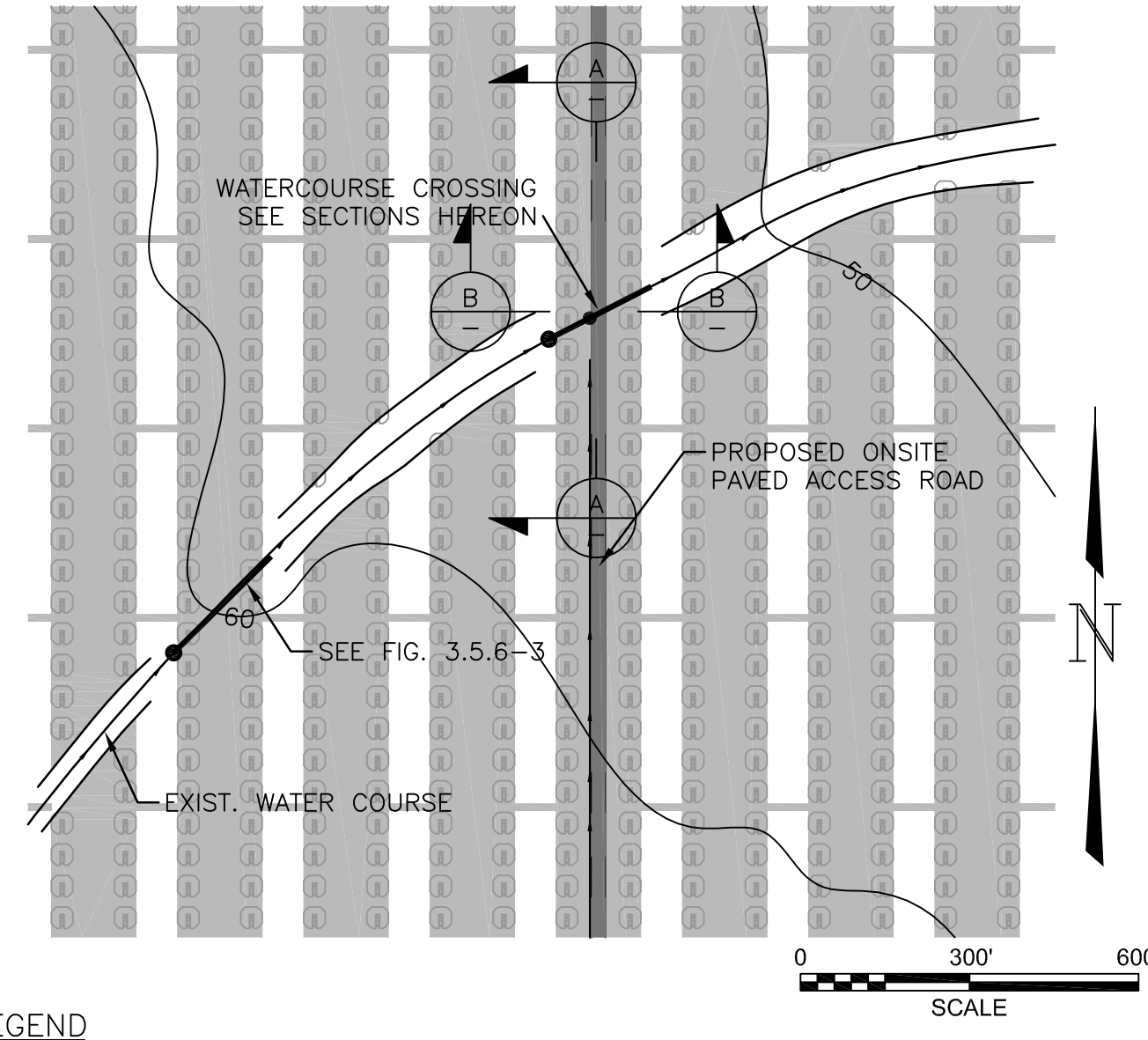

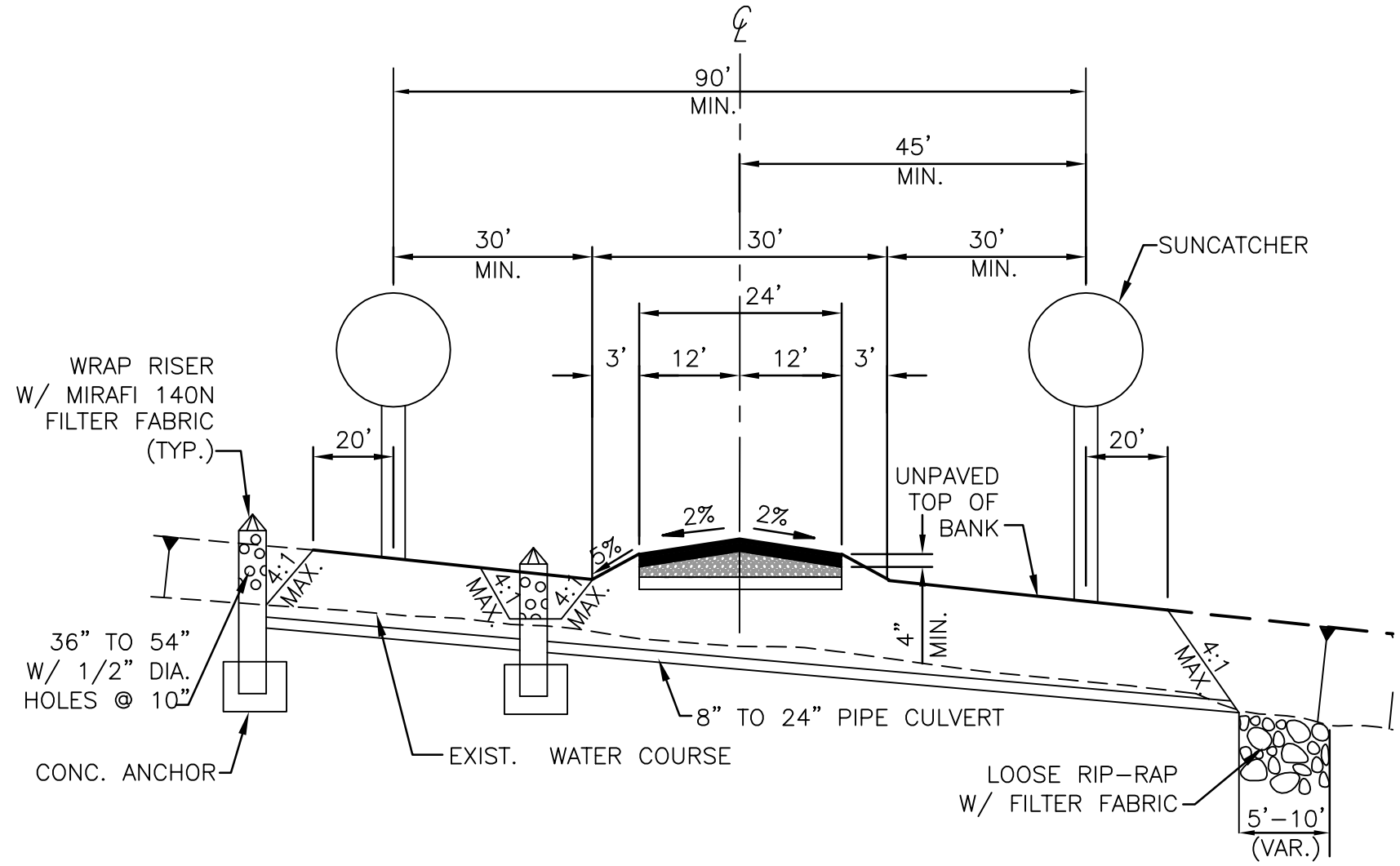

SECTION B–B
(N.T.S.)

LEGEND

- TRIMMING
- PAVED ROADWAYS (ASPHALT CEMENT)
- SUNCATCHER UNIT
- EXIST. WATER COURSE
- LOW FLOW CULVERT W/ RISER

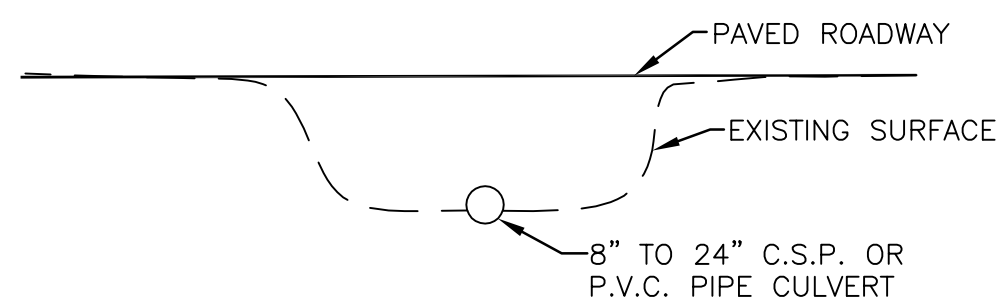

SECTION A–A
(N.T.S.)

PRELIMINARY

NO.	DATE		BY	APP.
P1	04/23/07	ISSUED FOR PRELIMINARY REVIEW	PH	
P2	07/30/07	CHANGED 'CLEARING' REFERENCE TO 'TRIMMING'	PH	
P3	04/16/08	RE-ISSUED FOR REVIEW	PH	

STANTEC CONSULTING INC.
9400 S.W. BARNES ROAD
STE. 200
PORTLAND, OREGON, 97225
503.297.1631
STANTEC.COM

DRN. STC/GSP	DES. STC/PH	CHK. STC/	DATE 01/23/07
SCALE NONE		APP.	DATE

LOW FLOW CULVERTS
SOLAR TWO PROJECT

URS

CREATED BY: STANTEC	DATE: 06-11-08	FIG. NO:
PM: AL	PROJ. NO: 27657102.00300	3-30

P:\Sys4\2000026801-Solar2\Exhibits\S2-C-0018-01.dwg, 4/16/2008 2:56:23 PM, slee

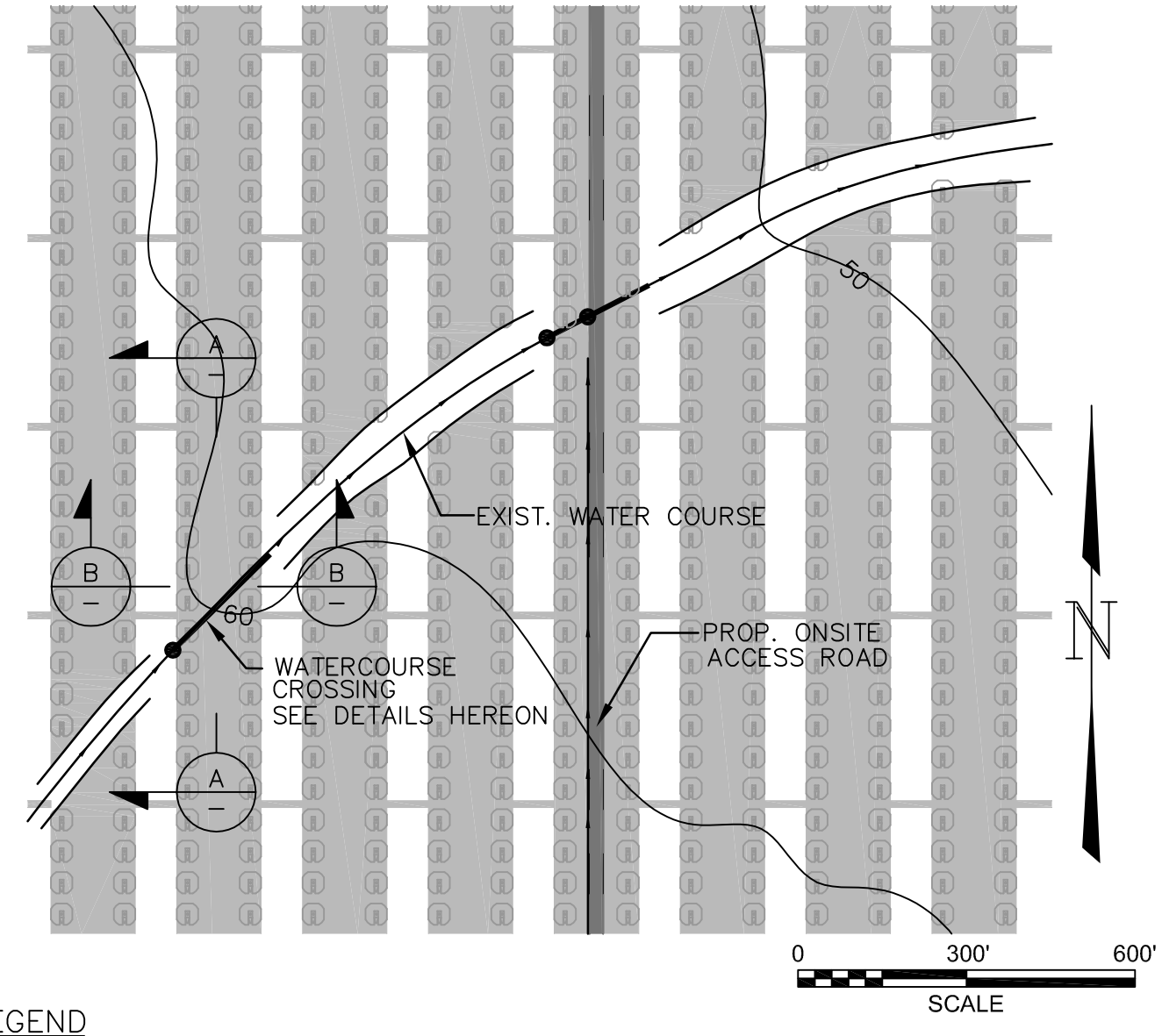

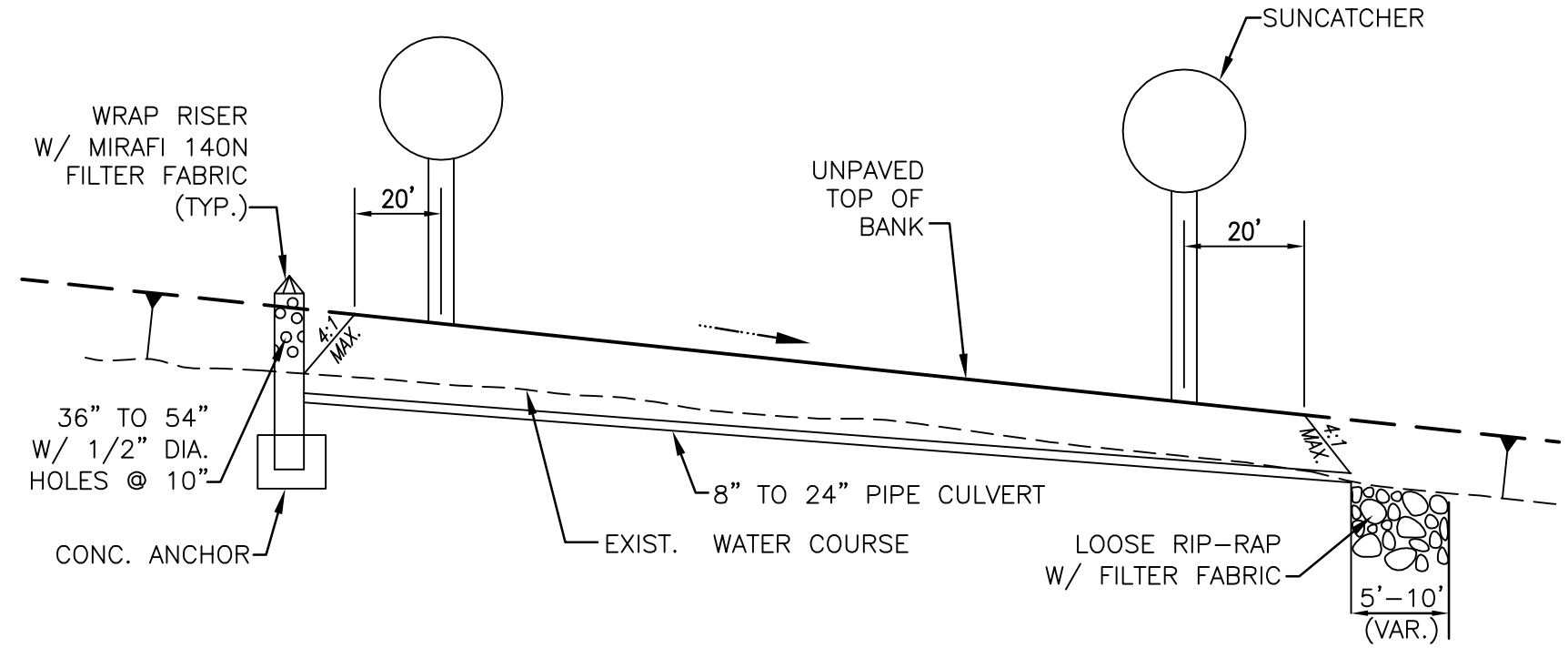

SECTION B–B
(N.T.S.)

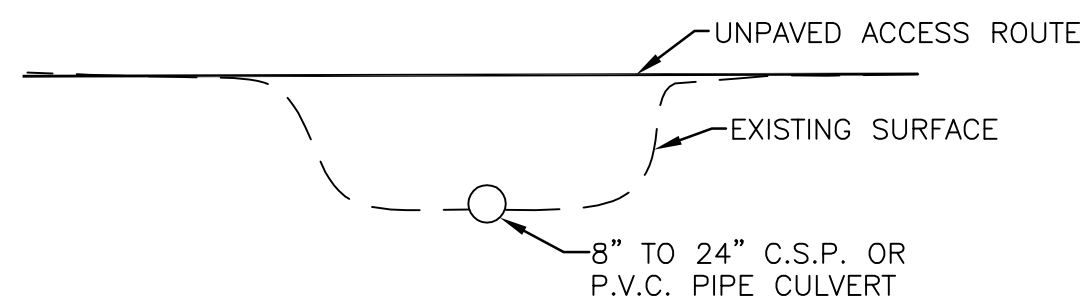

SECTION A–A
(N.T.S.)

LEGEND

- TRIMMING
- PAVED ROADWAYS (ASPHALT CEMENT)
- SUNCATCHER UNIT
- EXIST. WATER COURSE
- LOW FLOW CULVERT W/ RISER

PRELIMINARY

NO.	DATE		BY	APP.
P1	04/23/07	ISSUED FOR PRELIMINARY REVIEW	PH	
P2	07/30/07	CHANGED 'CLEARING' REFERENCE TO 'TRIMMING'	PH	
P3	04/16/08	RE–ISSUED FOR REVIEW	PH	

STANTEC CONSULTING INC.
9400 S.W. BARNES ROAD
STE. 200
PORTLAND, OREGON, 97225
503.297.1631
STANTEC.COM

DRN. STC/GSP	DES. STC/PH	CHK. STC/	DATE 01/23/07
SCALE NONE		APP.	DATE

LOW FLOW CULVERTS
UNDER SOLAR FIELD ACCESS ROUTES
SOLAR TWO PROJECT

URS

CREATED BY: STANTEC	DATE: 06-11-08	FIG. NO: 3-31
PM: AL	PROJ. NO: 27657102.00300	

P:\Sys4\2000026801-Solar2\Exhlblts\S2-C-0020-01.dwg, 4/16/2008 2:56:55 PM, slee

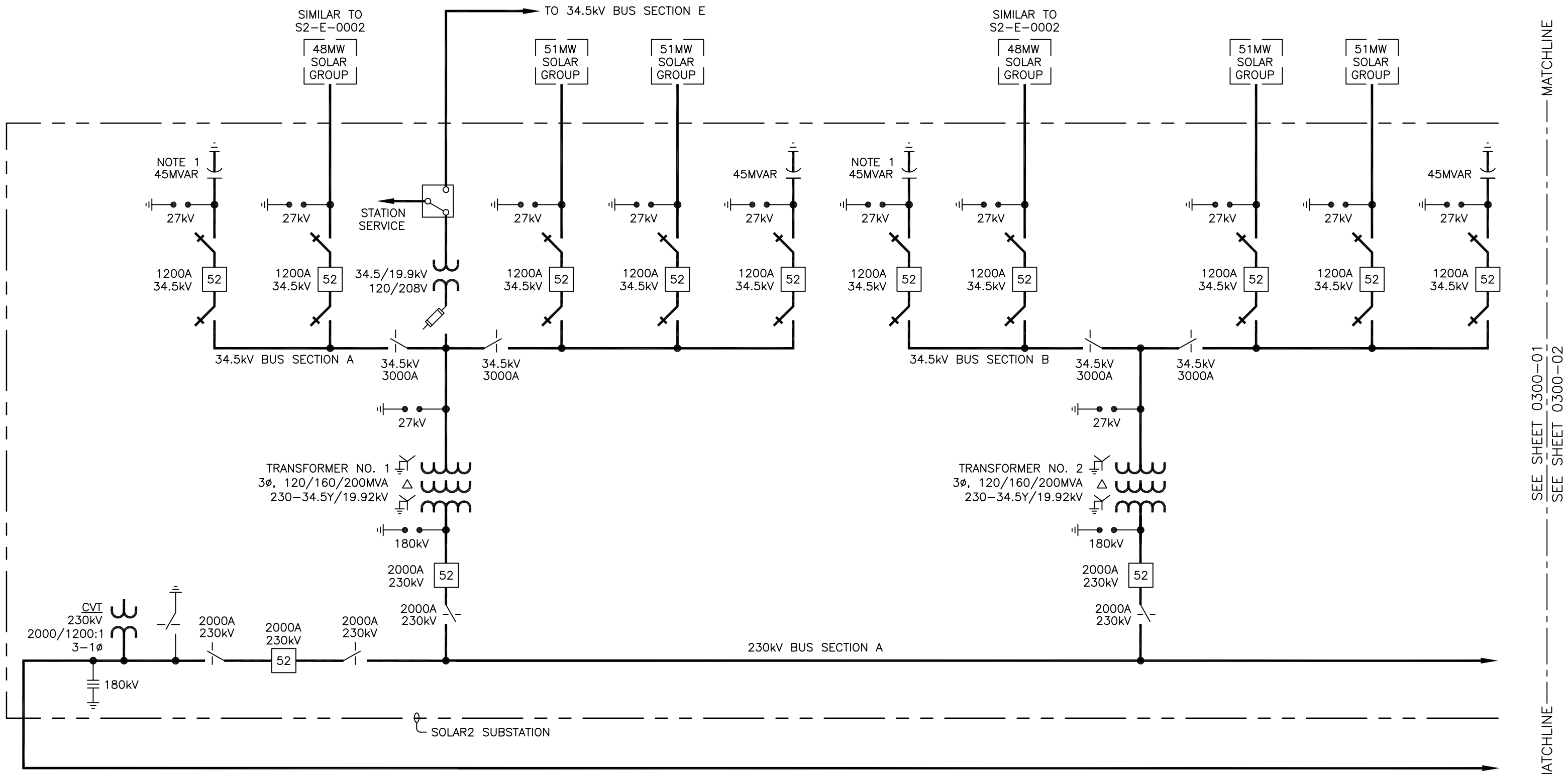

NOTE

1. CAP BANK SIZE AND NUMBER OF SWITCHED STEPS TO BE DETERMINED.

PRELIMINARY

NO.	DATE		BY	APP.
P1	04/23/07	ISSUED FOR PRELIMINARY REVIEW	PH	
P2	07/18/07	REVISED SDG&E CONNECTION, SOLAR GROUP LAYOUT	PH	
P3	04/16/08	CHANGED TO 750MW SUBSTATION DESIGN	PH	

STANTEC CONSULTING INC.
9400 S.W. BARNES ROAD
STE. 200
PORTLAND, OREGON, 97225
503.297.1631
STANTEC.COM

DRN. STC/GSP	DES. STC/PH	CHK. STC/	DATE 01/22/07
SCALE NONE		APP.	DATE

750-MW SOLAR TWO SUBSTATION
ONE-LINE DIAGRAM, SHEET 1
SOLAR TWO PROJECT

URS

CREATED BY: STANTEC	DATE: 06-11-08	FIG. NO: 3-32
PM: AL	PROJ. NO: 27657102.00300	

P:\Sys4\2000026801-Solar2\Exhibits\S2-E-0300-01.dwg, 4/16/2008 11:49:28 AM, slee

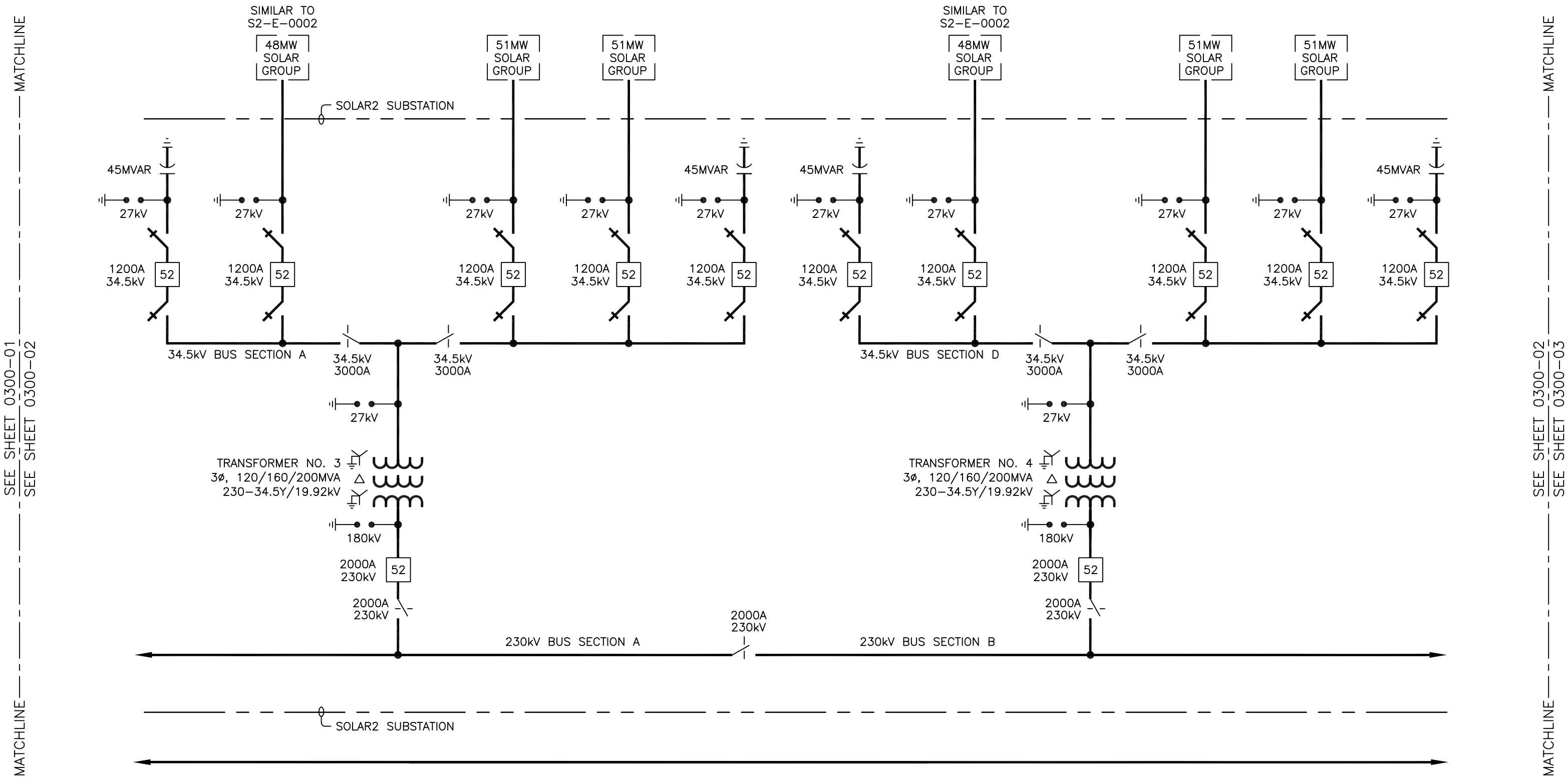

PRELIMINARY

NO.	DATE		BY	APP.
P1	04/23/07	ISSUED FOR PRELIMINARY REVIEW	PH	
P2	07/18/07	REVISED SDG&E CONNECTION, SOLAR GROUP LAYOUT	PH	
P3	04/16/08	CHANGED TO 750MW SUBSTATION DESIGN	PH	

STANTEC CONSULTING INC.
9400 S.W. BARNES ROAD
STE. 200
PORTLAND, OREGON, 97225
503.297.1631
STANTEC.COM

DRN. STC/GSP	DES. STC/PH	CHK. STC/	DATE 01/22/07
SCALE NONE		APP.	DATE

750-MW SOLAR TWO SUBSTATION
ONE-LINE DIAGRAM, SHEET 2
SOLAR TWO PROJECT

URS

CREATED BY: STANTEC	DATE: 06-11-08	FIG. NO:
PM: AL	PROJ. NO: 27657102.00300	3-33

P:\Sys4\2000026801-Solar2\Exhibits\S2-E-0300-02.dwg, 4/16/2008 1:06:20 PM, slee

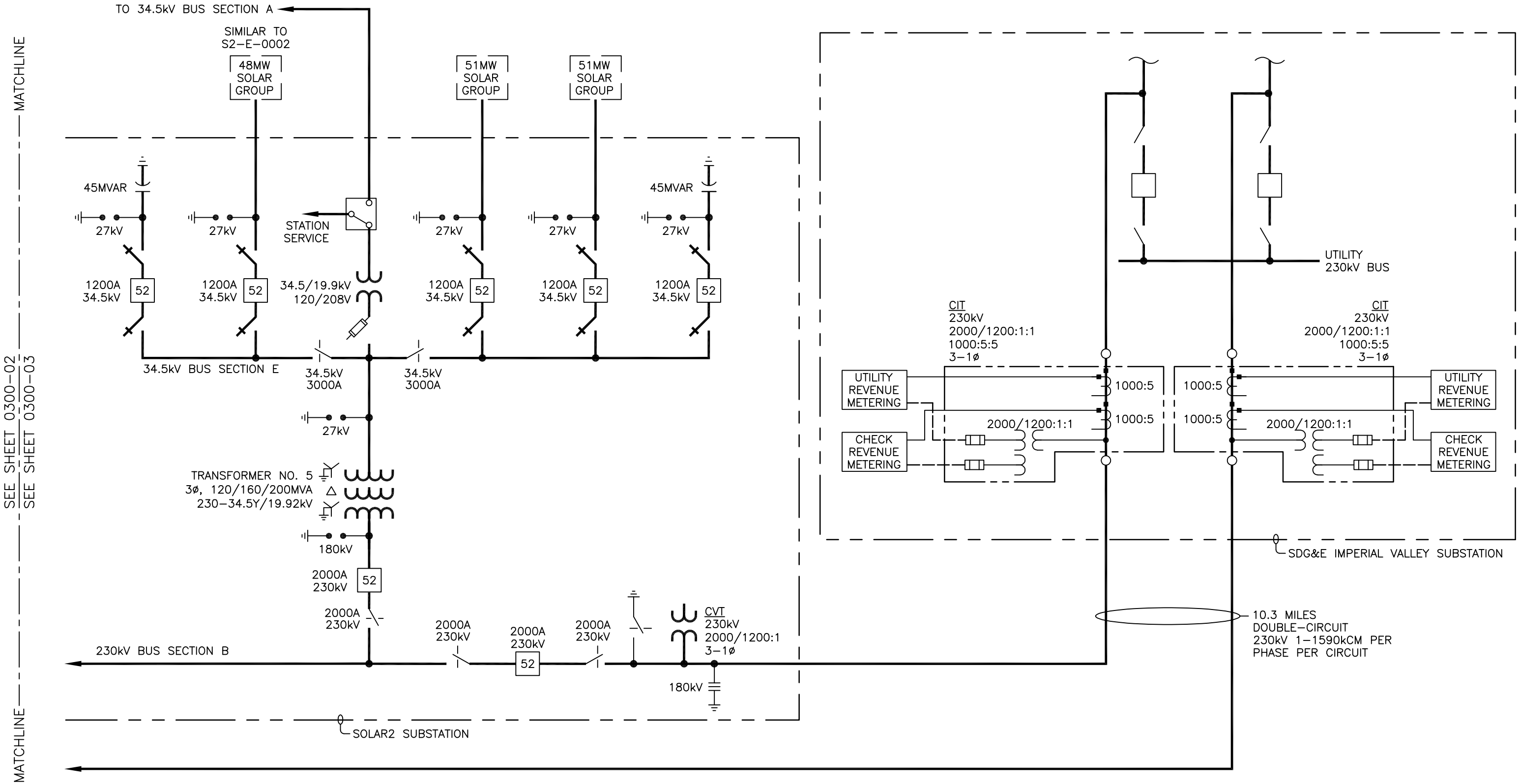

PRELIMINARY

NO.	DATE		BY	APP.
P1	04/16/08	CHANGED TO 750MW SUBSTATION DESIGN	PH	

STANTEC CONSULTING INC.
9400 S.W. BARNES ROAD
STE. 200
PORTLAND, OREGON, 97225
503.297.1631
STANTEC.COM

DRN. STC/SCL	DES. STC/PH	CHK. STC/	DATE 04/08/08
SCALE NONE		APP.	DATE

750-MW SOLAR TWO SUBSTATION
ONE-LINE DIAGRAM, SHEET 3
SOLAR TWO PROJECT

URS

CREATED BY: STANTEC	DATE: 06-11-08	FIG. NO: 3-34
PM: AL	PROJ. NO: 27657102.00300	

P:\Sys4\2000026801-Solar2\Exhibits\S2-E-0300-03.dwg, 4/16/2008 11:51:58 AM, slee

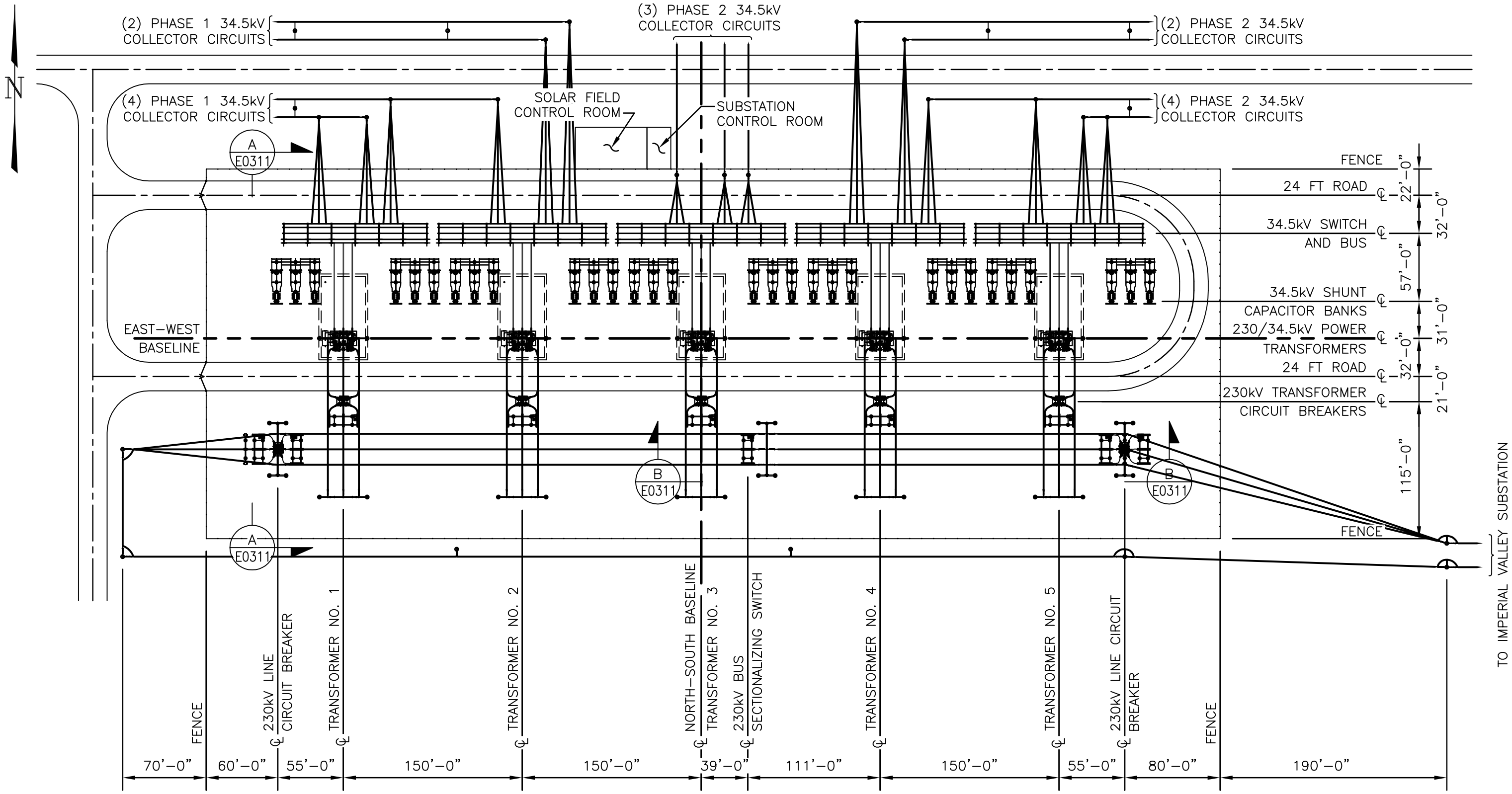

REFERENCE DRAWING
E–0311 BUS ELEVATIONS

PRELIMINARY

NO.	DATE		BY	APP.
P1	10/27/06	ISSUED FOR PRELIMINARY REVIEW	RS	THW
P2	12/15/06	CHANGED TO 450 MW; ISSUED FOR AFC REVIEW	PH	
P3	01/11/07	ADDED CONTAINER/STORAGE BLDG.	PH	
P4	04/17/08	CHANGED TO 750 MW SUBSTATION DESIGN	KJL	PH

Stantec
STANTEC CONSULTING INC.
9400 S.W. BARNES ROAD
STE. 200
PORTLAND, OREGON, 97225
503.297.1631
STANTEC.COM

DRN. STC/GSP	DES. STC/PH	CHK. STC/	DATE 04/15/08
SCALE NOT TO SCALE		APP.	DATE

750-MW SOLAR TWO SUBSTATION
GENERAL ARRANGEMENT PLAN
SOLAR TWO PROJECT

URS

CREATED BY: STANTEC	DATE: 06-11-08	FIG. NO:
PM: AL	PROJ. NO: 27657102.00300	3-35

P:\Sys4\2000026801-Solar2\Exhibits\S2-E-0310-01.dwg, 4/18/2008 1:35:44 PM, gparsons

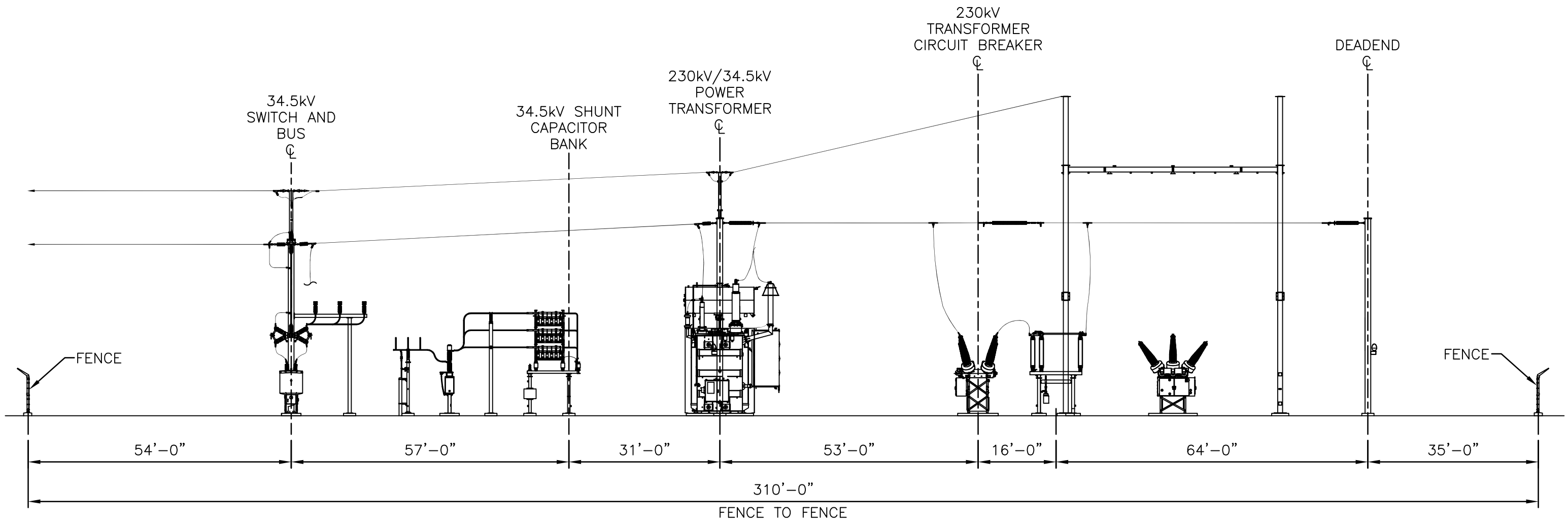

AA
—
ELEVATION
N.T.S.

PRELIMINARY

NO.	DATE		BY	APP.
P1	04/17/08	ISSUED FOR PRELIMINARY REVIEW	PH	

STANTEC CONSULTING INC.
9400 S.W. BARNES ROAD
STE. 200
PORTLAND, OREGON, 97225
503.297.1631
STANTEC.COM

DRN. STC/GSP	DES. STC/PH	CHK. STC/	DATE 04/15/08
SCALE NOT TO SCALE		APP.	DATE

750-MW SOLAR TWO SUBSTATION
ELEVATION, SHEET 1
SOLAR TWO PROJECT

URS

CREATED BY: STANTEC	DATE: 06-11-08	FIG. NO:
PM: AL	PROJ. NO: 27657102.00300	3-36

P:\Sys4\2000026801-Solar2\Exhibits\S2-E-0311-01.dwg, 4/18/2008 12:32:07 PM, gparsons

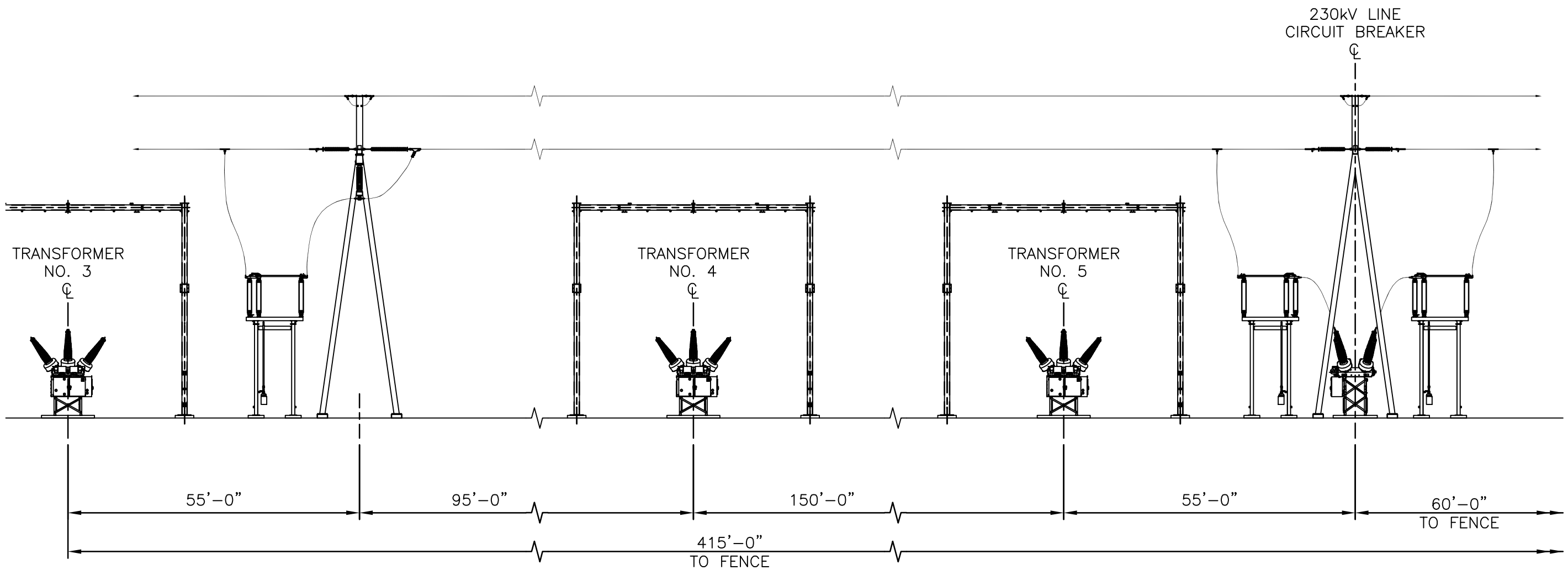

BB
–
ELEVATION
N.T.S.

NOTE: WEST END OF SUBSTATION IS SIMILAR TO A MIRROR OF THE EAST END.

PRELIMINARY

NO.	DATE		BY	APP.
P1	04/17/08	ISSUED FOR PRELIMINARY REVIEW	PH	

STANTEC CONSULTING INC.
9400 S.W. BARNES ROAD
STE. 200
PORTLAND, OREGON, 97225
503.297.1631 STANTEC.COM

DRN. STC/GSP	DES. STC/PH	CHK. STC/	DATE 04/15/08
SCALE NOT TO SCALE		APP.	DATE

750-MW SOLAR TWO SUBSTATION
ELEVATION, SHEET 2
SOLAR TWO PROJECT

URS

CREATED BY: STANTEC	DATE: 06-11-08	FIG. NO:
PM: AL	PROJ. NO: 27657102.00300	3-37

P:\Sys4\2000026801-Solar2\Exhibits\S2-E-0311-02.dwg, 4/18/2008 12:33:37 PM, gparsons

Figure 3.4-38
Typical H-Frame Transmission Structure

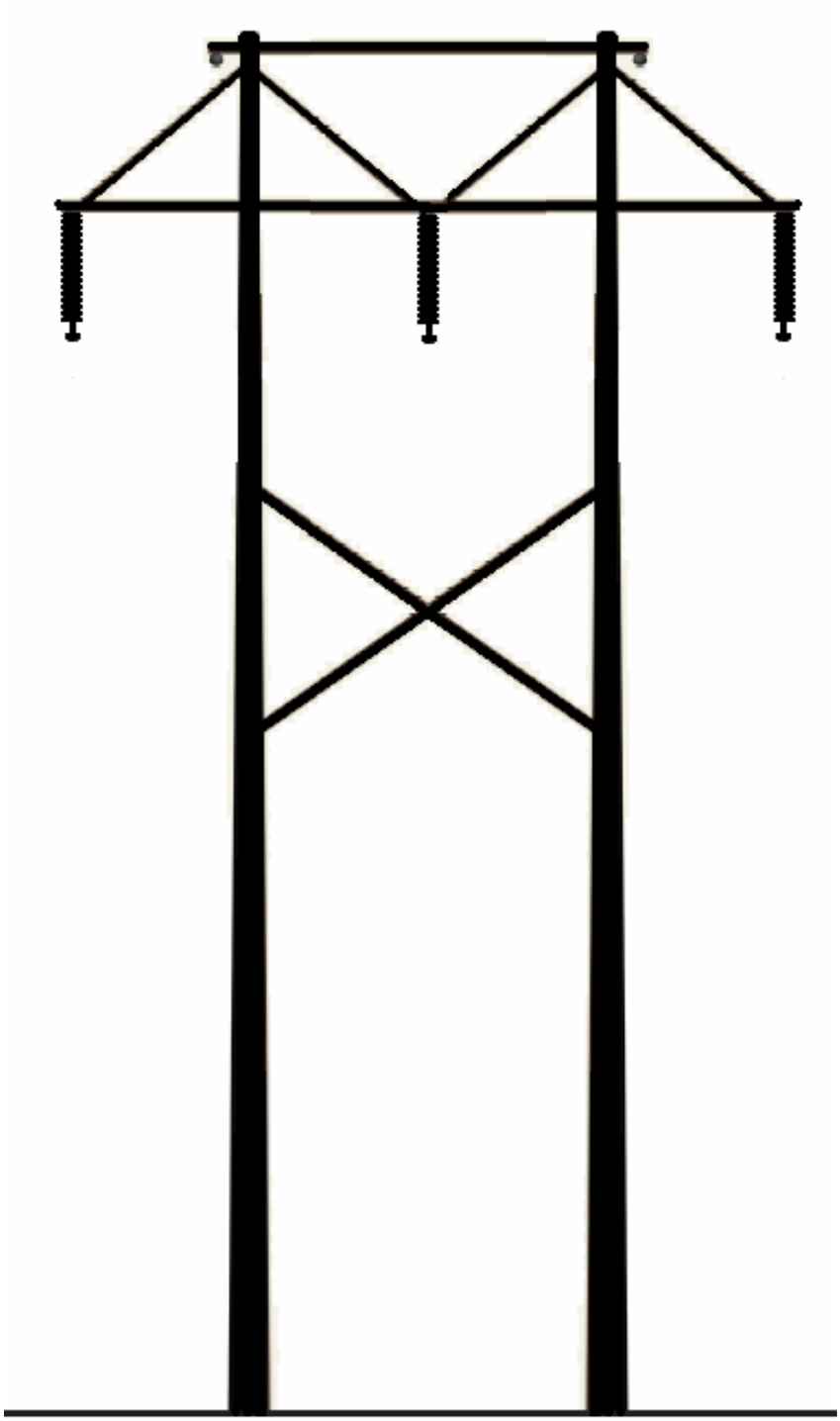

	TYPICAL H-FRAME TRANSMISSION STRUCTURE SOLAR TWO PROJECT		
URS	CREATED BY: STANTEC	DATE: 06-11-08	FIG. NO: 3-38
	PM: AL	PROJ. NO: 27657102.00300	

Figure 3.4-39
Typical Double-Circuit Transmission Structures

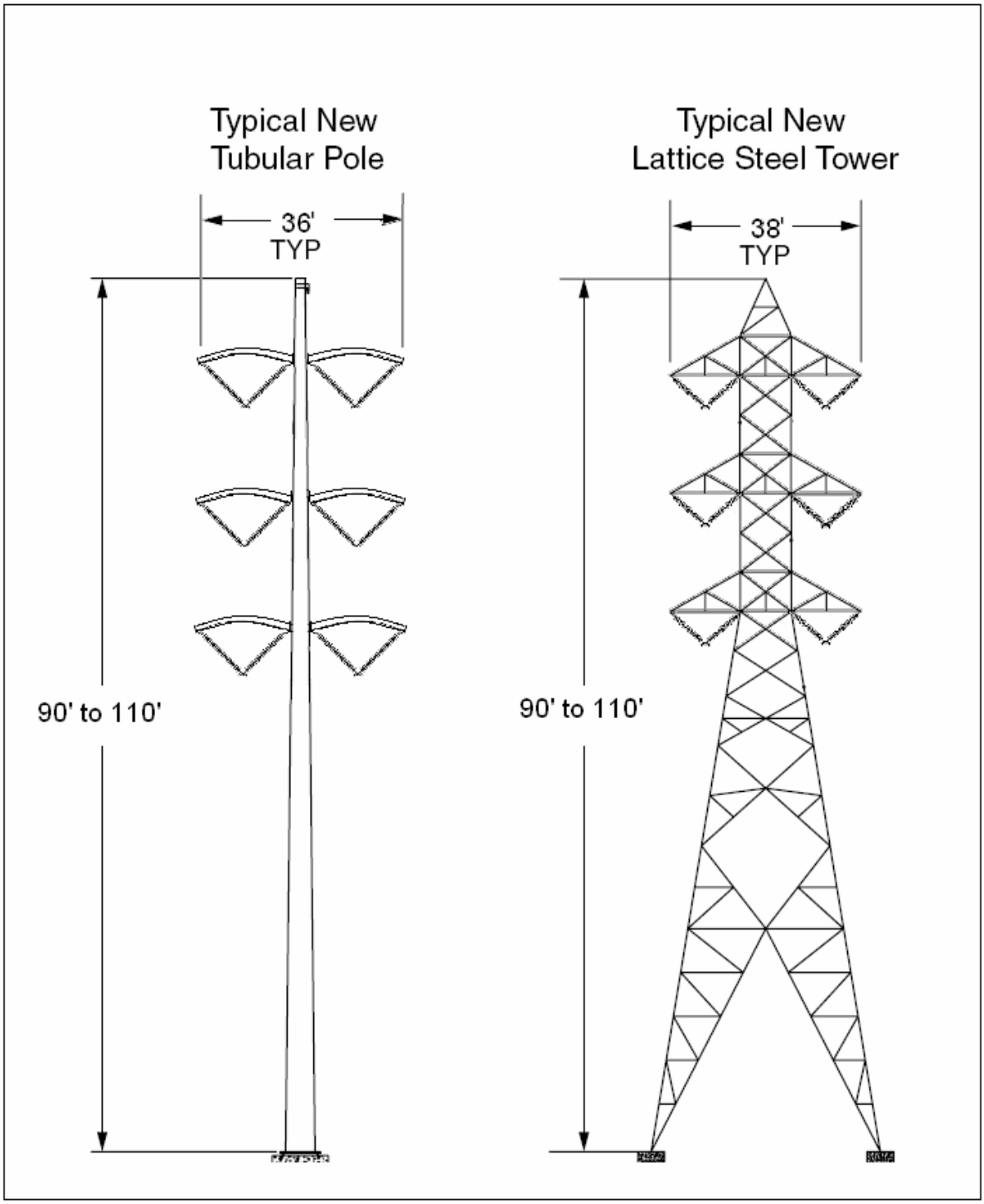

	TYPICAL DOUBLE-CIRCUIT TRANSMISSION STRUCTURES SOLAR TWO PROJECT		
URS	CREATED BY: STANTEC	DATE: 06-11-08	FIG. NO: 3-39
	PM: AL	PROJ. NO: 27657102.00300	

Figure 3.4-40
Solar Two Milestone Schedule – Phase I

ID	Task Name	Duration
1	**PHASE 1 PART 1 - PRECONSTRUCTION**	**577.99 days**
2	**PROJECT APPROVALS**	**315.01 days**
7	**DESIGN/DOCUMENTS**	**323 days**
17	**BID & AWARD**	**417.99 days**
24	**PROCUREMENT**	**240 days**
31	CONTRACTOR MOBILIZATION	6 days
32	**PHASE 1 START OF CONSTRUCTION**	0 days
33	**PHASE 1 PART 2 - GENERAL CONDITION**	**247 days**
34	OFFSITE TRANSMISSION LINES	94 days
35	**SITE / CIVIL**	**131 days**
36	CONSTRUCTION LAYDOWN	11.7 days
37	INITIAL SITE SURVEY/ LAYOUT	22 days
38	**CHANNELIZING WASH AREAS**	**90 days**
41	**PERMANENT ACCESS ROADS**	**109 days**
48	FENCING (4 crews)	55 days
49	**SERVICES COMPLEX**	**247 days**
50	**SUNCATCHER ASSEMBLY BUILDINGS & CONSTRUCTION LAYDOWN**	**49 days**
52	**DISH ASSEMBLY BUILDING**	**125 days**
55	**SERVICES COMPLEX**	**225 days**
56	SITE UTILITIES	5 mons
57	GRAD/ U/G UTILS/ FNDNS/ SLABS/ PADS	5 mons
58	**BUILDINGS**	**125 days**
59	MAINTENANCE FACILITY BUILDING	125 days
60	OPERATION AND ADMINISTRATION BUILDING	100 days
61	WATER TREATMENT SHELTER	60 days
62	CONTROL/RELAY PROTECTION BUILDING	60 days
63	OTHER STRUCTURAL FEATURES	30 days
64	**PHASE 1 PART 3 - SOLAR 2A SUBSTATION & TRANSMISSION**	**130.99 days**
65	SUBSTATION INFRASTRUCTURE (1ST HALF)	95 days
66	ONSITE TRANSMISSION LINES	88 days
67	35kV DIRECT BURY CABLE INCLUDE FIBER-OPTIC	30 days
68	CONTROLS AVAILABLE FOR 1ST 18MW ON-LINE	0 days
69	**PHASE 1 PART 4 - PHASE 1 SUNCATCHER INSTALLATION**	**405 days**
124		

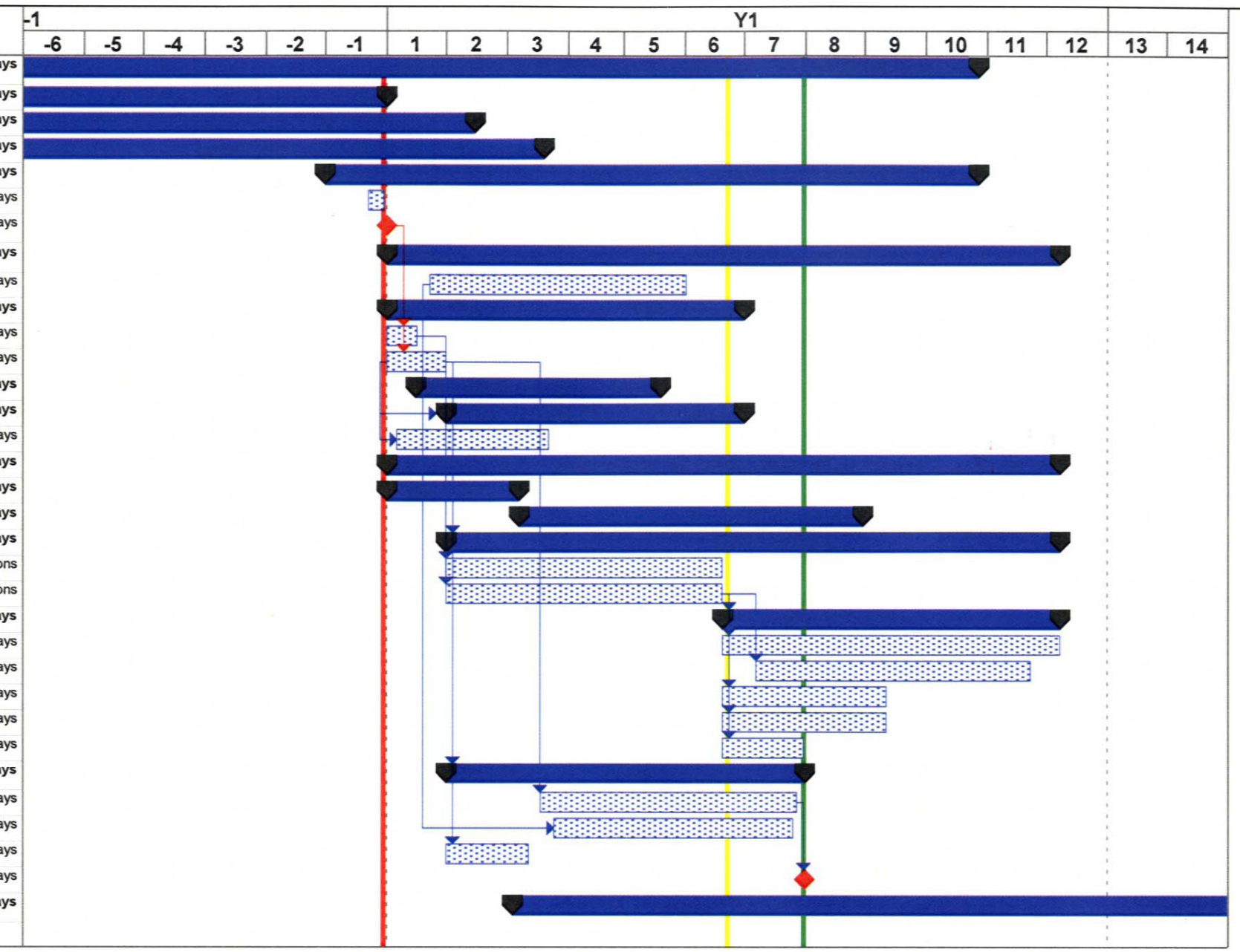

SOLAR TWO MILESTONE SCHEDULE
PHASE I
SOLAR TWO PROJECT

URS

CREATED BY: STANTEC	DATE: 06-11-08	FIG. NO:
PM: AL	PROJ. NO: 27657102.00300	3-40

Figure 3.4-41
Solar Two Milestone Schedule – Phase II

ID	Task Name	Duration
1	**PHASE 1 PART 1 - PRECONSTRUCTION**	**577.99 days**
2	**PROJECT APPROVALS**	**315.01 days**
7	**DESIGN/DOCUMENTS**	**323 days**
17	**BID & AWARD**	**417.99 days**
24	**PROCUREMENT**	**240 days**
31	CONTRACTOR MOBILIZATION	6 days
32	**PHASE 1 START OF CONSTRUCTION**	0 days
33	**PHASE 1 PART 2 - GENERAL CONDITION**	**247 days**
34	OFFSITE TRANSMISSION LINES	94 days
35	**SITE / CIVIL**	**131 days**
36	CONSTRUCTION LAYDOWN	11.7 days
37	INITIAL SITE SURVEY/ LAYOUT	22 days
38	**CHANNELIZING WASH AREAS**	**90 days**
41	**PERMANENT ACCESS ROADS**	**109 days**
48	FENCING (4 crews)	55 days
49	**SERVICES COMPLEX**	**247 days**
50	**SUNCATCHER ASSEMBLY BUILDINGS & CONSTRUCTION LAYDOWN**	**49 days**
52	**DISH ASSEMBLY BUILDING**	**125 days**
55	**SERVICES COMPLEX**	**225 days**
56	SITE UTILITIES	5 mons
57	GRAD/ U/G UTILS/ FNDNS/ SLABS/ PADS	5 mons
58	**BUILDINGS**	**125 days**
59	MAINTENANCE FACILITY BUILDING	125 days
60	OPERATION AND ADMINISTRATION BUILDING	100 days
61	WATER TREATMENT SHELTER	60 days
62	CONTROL/RELAY PROTECTION BUILDING	60 days
63	OTHER STRUCTURAL FEATURES	30 days
64	**PHASE 1 PART 3 - SOLAR 2A SUBSTATION & TRANSMISSION**	**130.99 days**
65	SUBSTATION INFRASTRUCTURE (1ST HALF)	95 days
66	ONSITE TRANSMISSION LINES	88 days
67	35kV DIRECT BURY CABLE INCLUDE FIBER-OPTIC	30 days
68	CONTROLS AVAILABLE FOR 1ST 18MW ON-LINE	0 days
69	**PHASE 1 PART 4 - PHASE 1 SUNCATCHER INSTALLATION**	**405 days**
124		

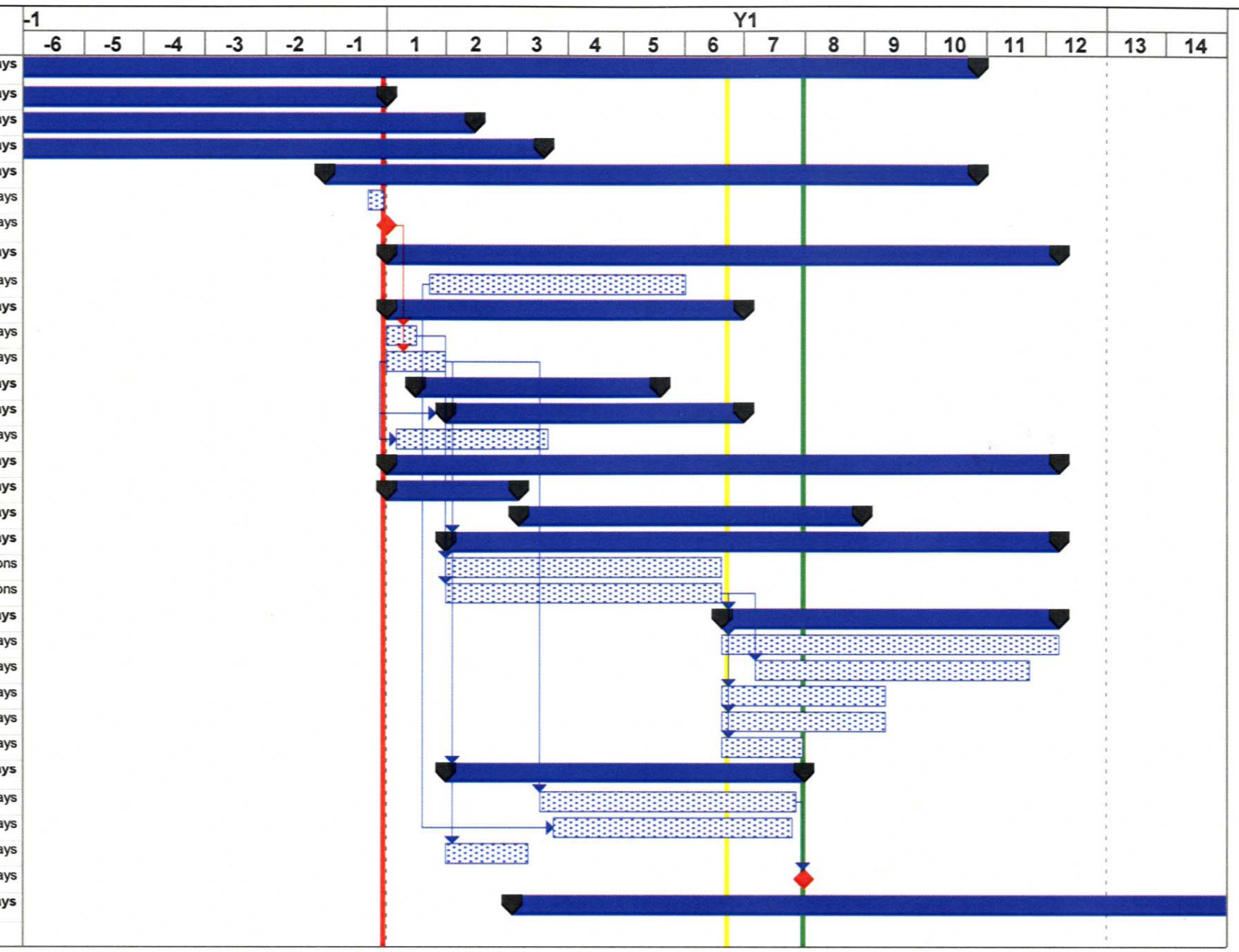

SOLAR TWO MILESTONE SCHEDULE
PHASE II
SOLAR TWO PROJECT

URS

CREATED BY: STANTEC	DATE: 06-11-08	FIG. NO:
PM: AL	PROJ. NO: 27657102.00300	3-41

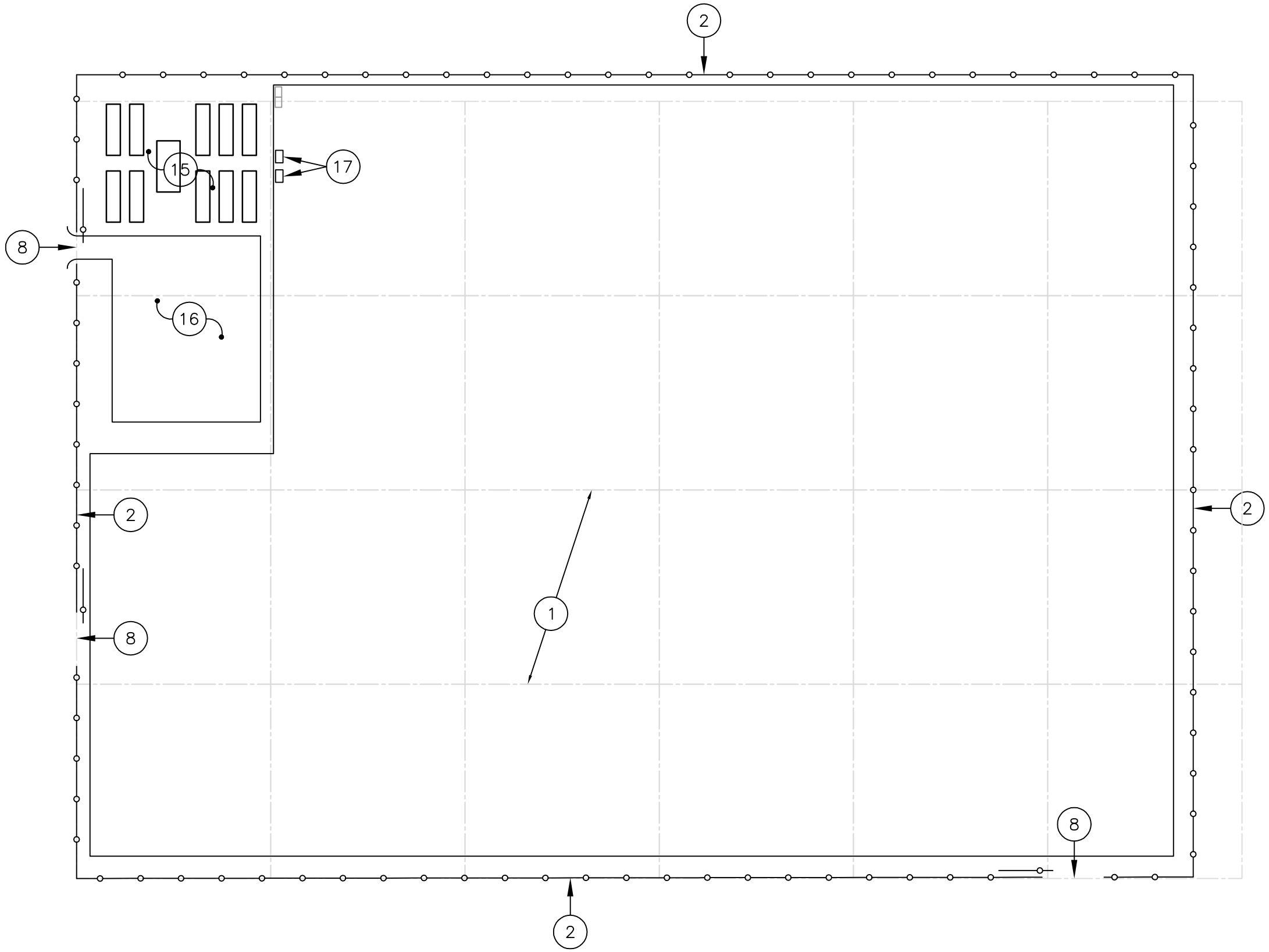

KEYED NOTES

1. 1 ACRE SECTION (TYP. FOR ALL)
2. PERIMETER FENCE
8. ACCESS GATE
15. MOBILE CONSTRUCTION TRAILERS
16. CONSTRUCTION PARKING AREA
17. 20 CU. YD. TEMPORARY CONSTRUCTION DUMPSTERS

0 120' 240'
SCALE

PRELIMINARY

NO.	DATE		BY	APP.
P1	04/16/08	ISSUED FOR PRELIMINARY REVIEW	PH	

STANTEC CONSULTING INC.
9400 S.W. BARNES ROAD
STE. 200
PORTLAND, OREGON, 97225
503.297.1631
STANTEC.COM

DRN. STC/GSP	DES. STC/PH	CHK. STC/	DATE 04/11/08
SCALE 1"=120'		APP.	DATE

CONSTRUCTION LAYDOWN AREA
SITE PLAN
SOLAR TWO PROJECT

URS

CREATED BY: STANTEC	DATE: 06-11-08	FIG. NO: 3-42
PM: AL	PROJ. NO: 27657102.00300	

P:\Sys4\2000026801-Solar2\Exhibits\S2-G-0300-01.dwg, 4/16/2008 2:51:31 PM, slee

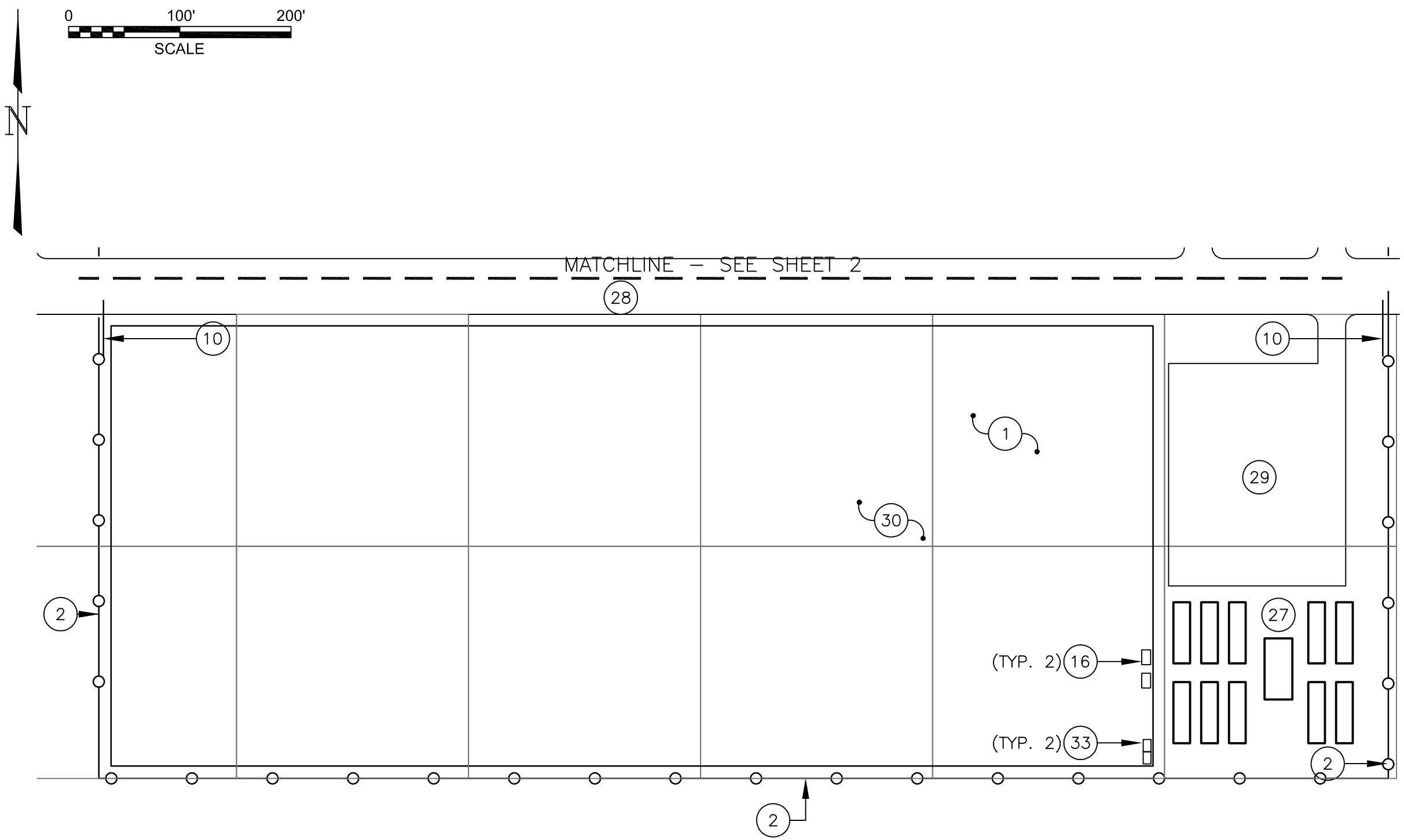

GENERAL NOTE

THIS DRAWING INDICATES 14 ACRES OF THE TOTAL 42 ACRE ADMINISTRATION, ASSEMBLY & CONSTRUCTION AREA.

KEYED NOTES

1. 1 ACRE SECTION (TYP. FOR ALL)
2. PERIMETER FENCE
10. ACCESS GATE
16. 5000 GALLON FUEL STORAGE (W/ CONTAINMENT) FOR ON–SITE VEHICLES (8' DIAx13'–4"L)
27. CONSTRUCTION OFFICE TRAILERS
28. SITE ARTERIAL ROAD
29. CONSTRUCTION EMPLOYEE PARKING LOT, PAVED (160'Wx200'L)
30. CONSTRUCTION LAYDOWN AREA, COMPACTED EARTH (940'Wx400'L)
33. 20 CU. YD. TEMPORARY CONSTRUCTION DUMPSTERS

PRELIMINARY

NO.	DATE		BY	APP.
P1	04/23/07	ISSUED FOR PRELIMINARY REVIEW	PH	
P2	07/17/07	ADDED NORTH ARROW, SCALE	PH	
P3	04/16/08	REISSUED	PH	

STANTEC CONSULTING INC.
9400 S.W. BARNES ROAD
STE. 200
PORTLAND, OREGON, 97225
503.297.1631
STANTEC.COM

DRN. STC/GSP	DES. STC/PH	CHK. STC/	DATE 03/06/07
SCALE 1"=100'		APP.	DATE

MAIN SERVICES COMPLEX CONSTRUCTION
LAYDOWN AREA
SOLAR TWO PROJECT

URS

CREATED BY: STANTEC	DATE: 06-11-08	FIG. NO: 3-43
PM: AL	PROJ. NO: 27657102.00300	

P:\Sys4\2000026801-Solar2\Exhlblts\S2-G-0100-03.dwg, 4/16/2008 11:44:15 AM, slee

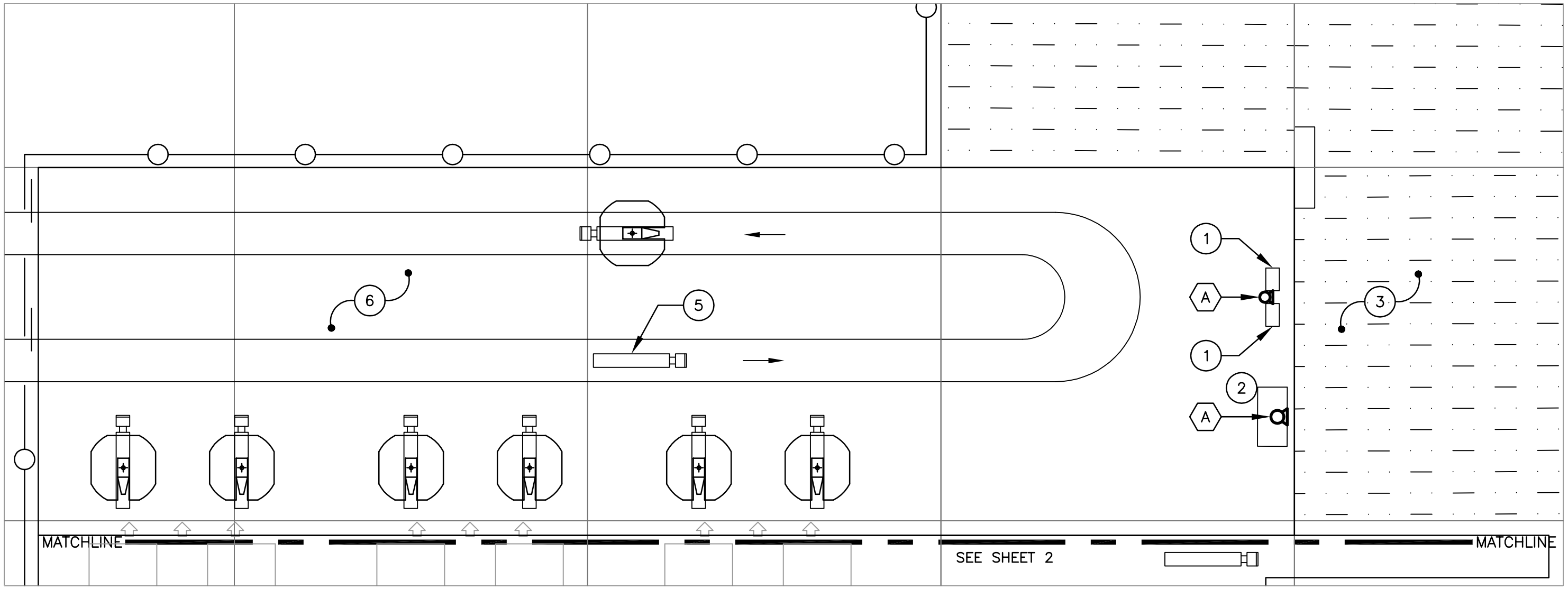

PLUMBING EQUIPMENT

A. EMERGENCY EYEWASH/SHOWER (EW/ES) EQUAL TO HAWS MODEL 8300.

KEYED NOTES

1. 5000 GALLON FUEL STORAGE (W/ CONTAINMENT) FOR ON–SITE VEHICLES
2. STORAGE AREA FOR 350 HYDROGEN BOTTLES
3. 1 ACRE EVAPORATION POND
4. PAVED AREA FOR ASSEMBLED DISH TRANSPORT & MAINTENANCE/DISH WASHING VEHICLES
5. TRUCK CAB W/ TRAILER OR FLAT BED (TYP. FOR ALL).

PRELIMINARY

NO.	DATE		BY	APP.
P1	04/23/07	ISSUED FOR PRELIMINARY REVIEW	PH	
P2	04/16/08	REISSUED	PH	

STANTEC CONSULTING INC.
9400 S.W. BARNES ROAD
STE. 200
PORTLAND, OREGON, 97225
503.297.1631
STANTEC.COM

DRN. STC/GSP	DES. STC/PH	CHK. STC/	DATE 03/06/07
SCALE 1"=60'		APP.	DATE

MAIN SERVICES COMPLEX PLUMBING
SITE PLAN – PART A
SOLAR TWO PROJECT

URS

CREATED BY: STANTEC	DATE: 06-11-08	FIG. NO: 3-44
PM: AL	PROJ. NO: 27657102.00300	

P:\Sys4\2000026801-Solar2\Exhibits\S2-P-0100-01.dwg, 4/16/2008 12:42:57 PM, slee

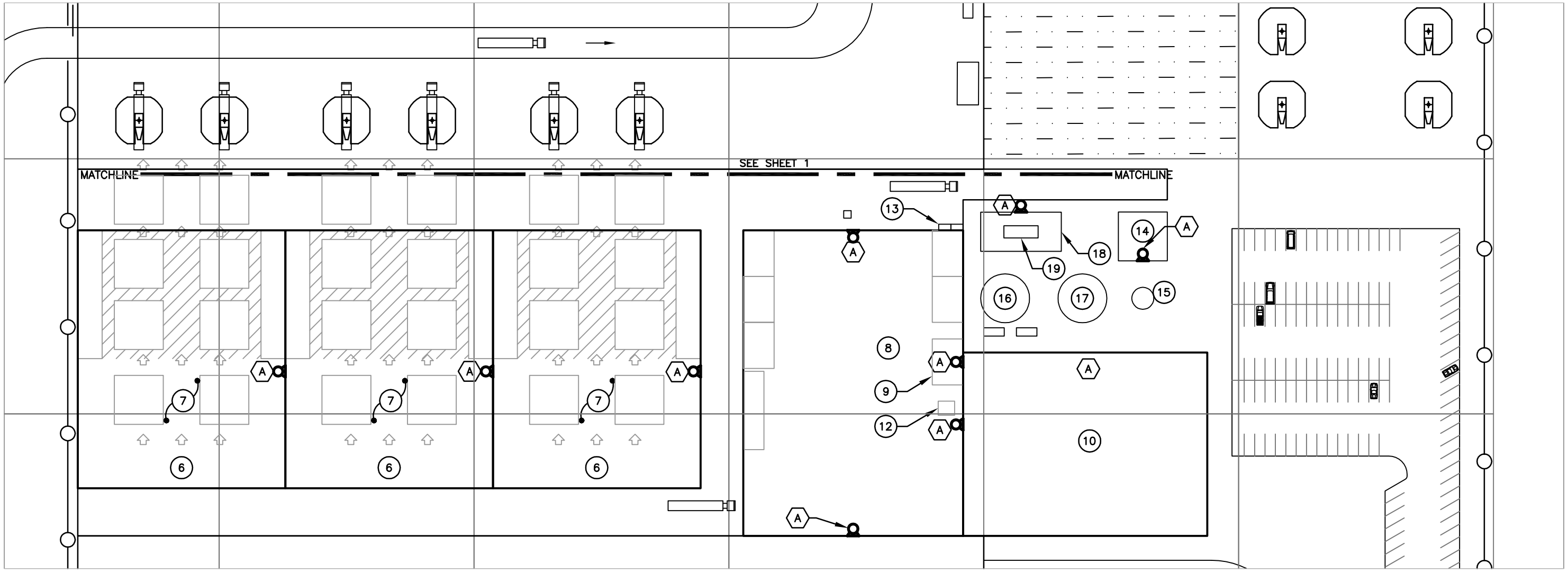

PLUMBING EQUIPMENT

A. EMERGENCY EYEWASH/SHOWER (EW/ES) EQUAL TO HAWS MODEL 8300.

KEYED NOTES

6. ASSEMBLY BUILDING (TYP. 3)
7. CSP DISH ASSEMBLY BAY
8. MAINTENANCE/CONTROL ROOM BLDG.
9. CHEMICAL STORAGE AREA
10. ADMINISTRATION BLDG.
11. NOT USED
12. 150 GALLON LUBRICATING OIL RECYCLING TANK.
13. (2) 8 CU. YD. DUMPSTERSWATER TREATMENT BLDG.
14. WATER TREATMENT BLDG.
15. POTABLE WATER TANK
16. FIRE PROTECTION/MIRROR WASHING WATER TANK
17. RAW WATER TANK
18. ALTERNATE 1: ABOVE GROUND 10,000 GALLON/DAY CAPACITY WASTE WATER TREATMENT FACILTY
19. ALTERNATE 2: BELOW GROUND 10,000 GALLON SEWAGE HOLDING TANK.

PRELIMINARY

NO.	DATE		BY	APP.
P1	04/23/07	ISSUED FOR PRELIMINARY REVIEW	PH	
P2	04/08/08	REVISED ADMIN. & MAINT. BUILDINGS FOR 600MW;		
		REMOVED WEATHER STATION/NIP TRACKER	PH	
P3	04/16/08	REVISED MAINT. BUILDINGS FOR 750MW	PH	

STANTEC CONSULTING INC.
9400 S.W. BARNES ROAD
STE. 200
PORTLAND, OREGON, 97225
503.297.1631
STANTEC.COM

DRN. STC/GSP	DES. STC/PH	CHK. STC/	DATE 03/06/07
SCALE 1"=60'		APP.	DATE

MAIN SERVICES COMPLEX PLUMBING
SITE PLAN – PART B
SOLAR TWO PROJECT

URS

CREATED BY: STANTEC	DATE: 06-11-08	FIG. NO:
PM: AL	PROJ. NO: 27657102.00300	3-45

P:\Sys4\2000026801-Solar2\Exhlblts\S2-P-0100-02.dwg, 4/16/2008 1:10:52 PM, slee

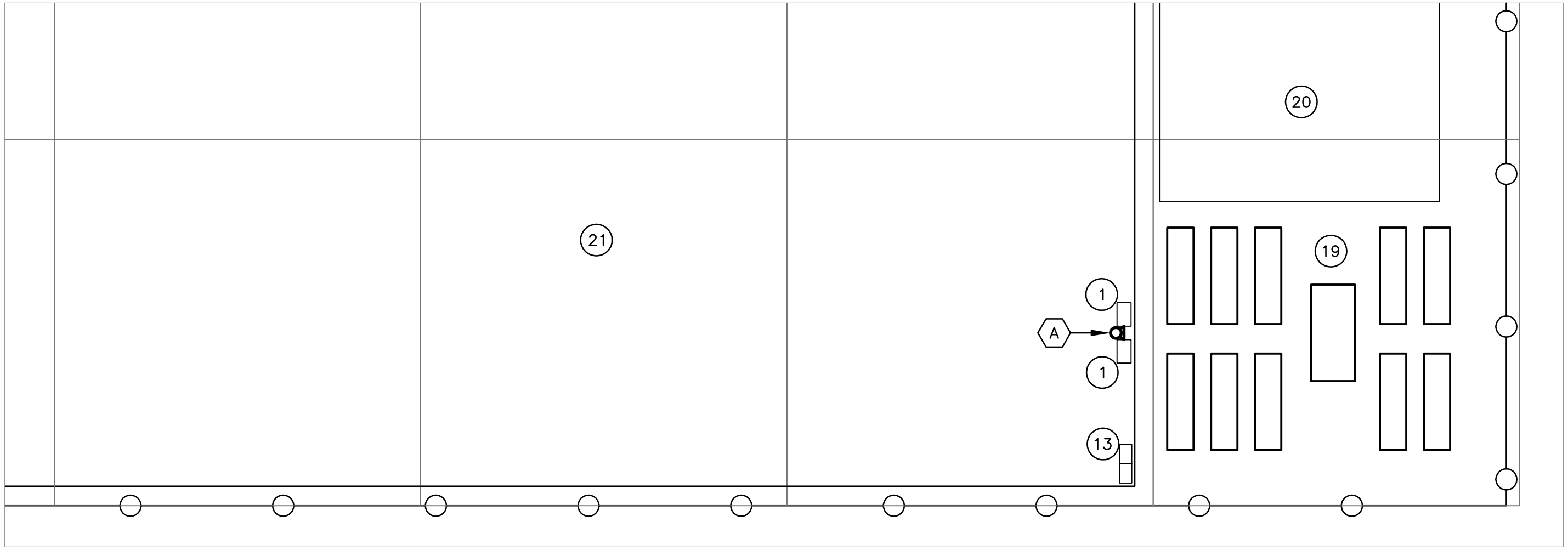

PLUMBING EQUIPMENT

A. EMERGENCY EYEWASH/SHOWER (EW/ES) EQUAL TO HAWS MODEL 8300.

KEYED NOTES

1. ASSEMBLY BUILDING (TYP. 3)
13. (2) 8 CU. YD. DUMPSTERSWATER TREATMENT BLDG.
19. CONSTRUCTION OFFICE TRAILERS
20. CONSTRUCTION EMPLOYEE PARKING LOT, PAVED
21. CONSTRUCTION LAYDOWN AREA

PRELIMINARY

NO.	DATE		BY	APP.
P1	04/23/07	ISSUED FOR PRELIMINARY REVIEW	PH	
P2	04/16/08	REISSUED	PH	

STANTEC CONSULTING INC.
9400 S.W. BARNES ROAD
STE. 200
PORTLAND, OREGON, 97225
503.297.1631
STANTEC.COM

DRN. STC/GSP	DES. STC/PH	CHK. STC/	DATE 03/06/07
SCALE 1"=60'		APP.	DATE

MAIN SERVICES COMPLEX PLUMBING
SITE PLAN – PART C
SOLAR TWO PROJECT

URS

CREATED BY: STANTEC	DATE: 06-11-08	FIG. NO: 3-46
PM: AL	PROJ. NO: 27657102.00300	

P:\Sys4\2000026801-Solar2\Exhibits\S2-P-0100-03.dwg, 4/16/2008 12:47:56 PM, slee

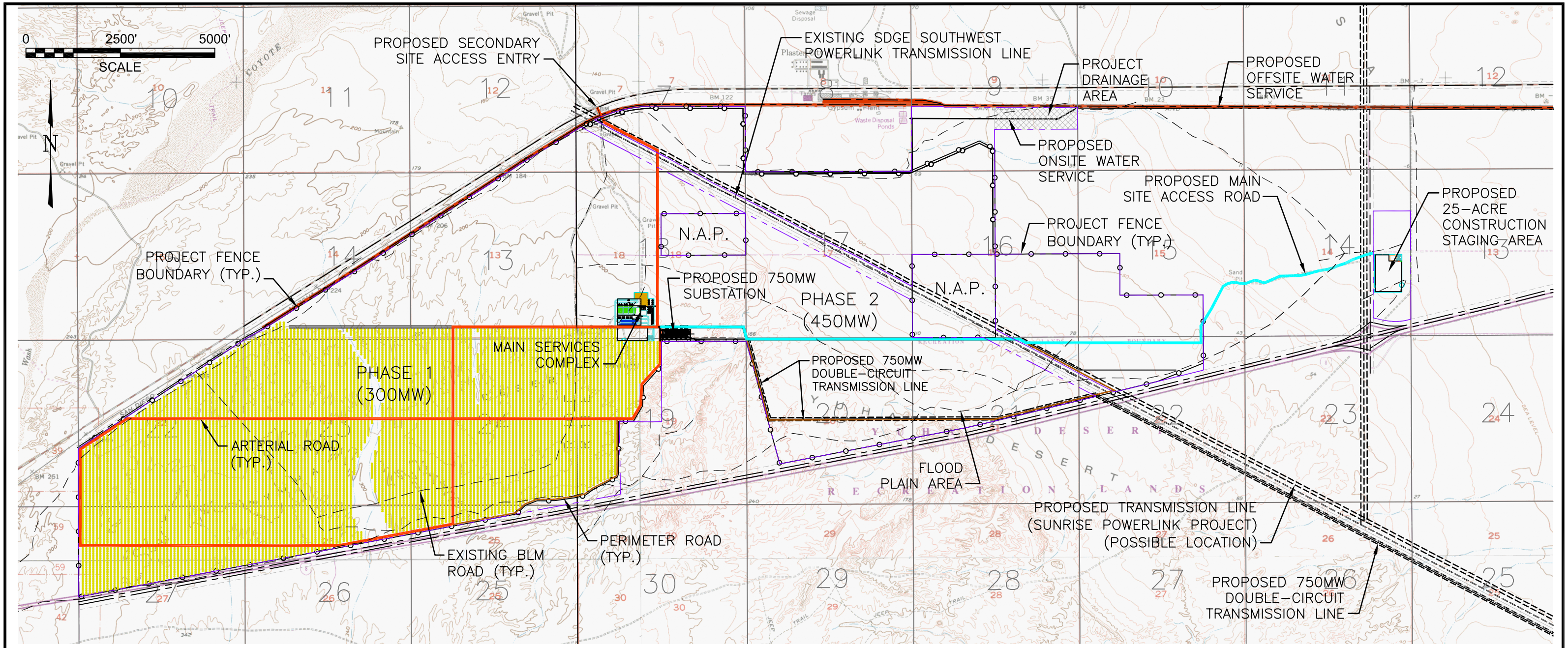

LEGEND

- PROJECT BOUNDARY
- SITE ACCESS ROAD
- 30' MAIN ARTERIAL
- 12' PERIMETER ROAD
- PROPOSED FENCE
- EXIST. BLM DESIGNATED OPEN ROUTES (APPROXIMATE LOCATIONS SHOWN FOR PLANNING PURPOSES ONLY)
- N.A.P. NOT A PART (OWNED BY OTHERS)
- PHASE 1 SUNCATCHERS

PRELIMINARY

NO.	DATE		BY	APP.
P4	04/16/08	REVISED ENTIRE SITE PLAN	PH	
P5	04/30/08	REVISED WESTERN FENCE BOUNDARY TO MATCH		
		PROPERTY BOUNDARY (PER URS CALCS); REVISED		
		EASTERN ACCESS ROAD (PER URS); FILLED		
		SUNCATCHERS INTO ADDED AREAS	PH	

STANTEC CONSULTING INC.
9400 S.W. BARNES ROAD
STE. 200
PORTLAND, OREGON, 97225
503.297.1631
STANTEC.COM

DRN. STC/GSP	DES. STC/PH	CHK. STC/	DATE 04/09/08
SCALE 1"=3000'		APP.	DATE

SOLAR TWO - SITE PLAN
PHASE I - DURING CONSTRUCTION
SOLAR TWO PROJECT

URS

CREATED BY: STANTEC	DATE: 06-11-08	FIG. NO: 3-1
PM: AL	PROJ. NO: 27657102.00300	

P:\Sys4\2000026801-Solar2\Exhibits\S2-G-0001-01.dwg, 4/30/2008 1:45:26 PM, gparsons

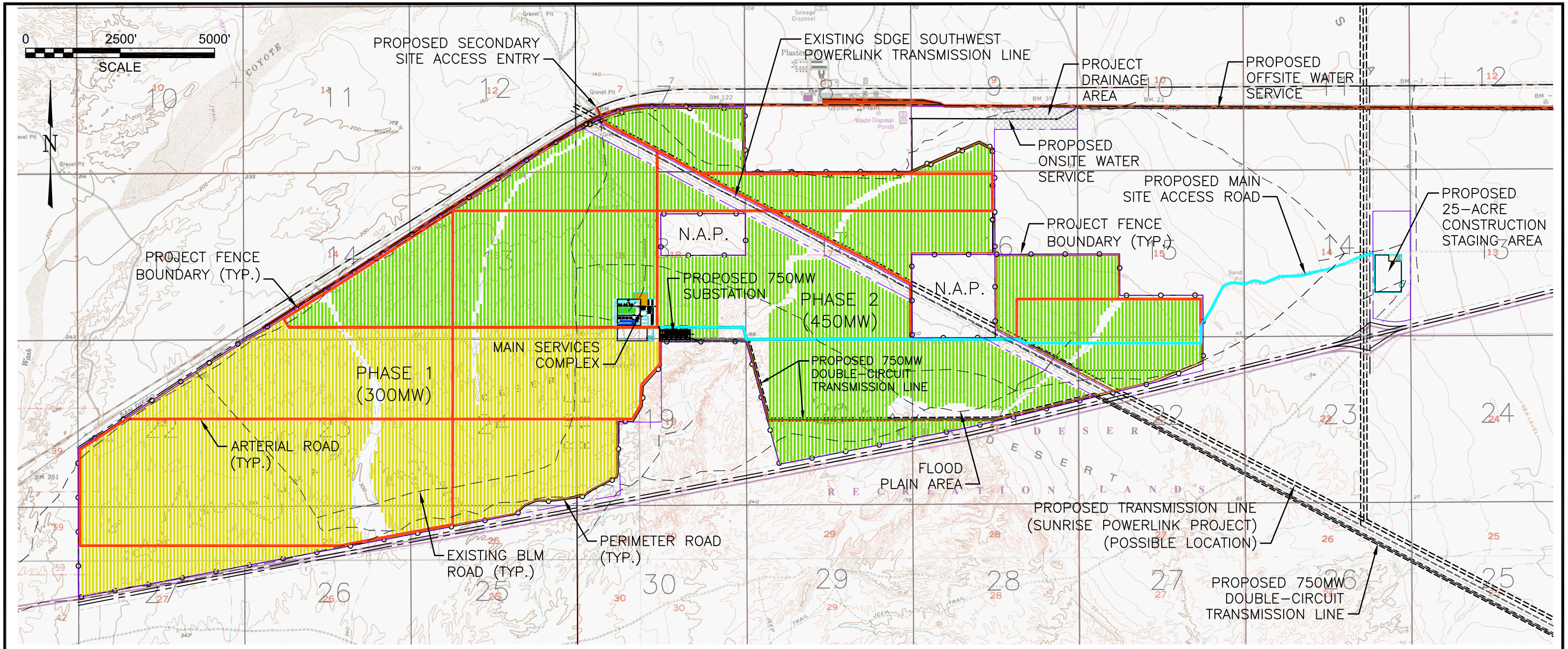

LEGEND

- PROJECT BOUNDARY
- SITE ACCESS ROAD
- 30' MAIN ARTERIAL
- 12' PERIMETER ROAD
- PROPOSED FENCE
- EXIST. BLM DESIGNATED OPEN ROUTES (APPROXIMATE LOCATIONS SHOWN FOR PLANNING PURPOSES ONLY)
- N.A.P. NOT A PART (OWNED BY OTHERS)
- PHASE 1 SUNCATCHERS
- PHASE 2 SUNCATCHERS
- PHASE 2 SUNCATCHERS (FINAL BUILDOUT)

PRELIMINARY

NO.	DATE		BY	APP.
P6	04/16/08	REVISED ENTIRE SITE PLAN		
P7	04/30/08	REVISED WESTERN FENCE BOUNDARY TO MATCH		
		PROPERTY BOUNDARY (PER URS CALCS); REVISED		
		EASTERN ACCESS ROAD (PER URS); FILLED		
		SUNCATCHERS INTO ADDED AREAS	PH	

STANTEC CONSULTING INC.
9400 S.W. BARNES ROAD
STE. 200
PORTLAND, OREGON, 97225
503.297.1631
STANTEC.COM

DRN. STC/GSP	DES. STC/PH	CHK. STC/	DATE 04/09/08
SCALE 1"=3000'		APP.	DATE

SOLAR TWO - SITE PLAN
PHASE II - DURING CONSTRUCTION
SOLAR TWO PROJECT

URS

CREATED BY: STANTEC	DATE: 06-11-08	FIG. NO: 3-2
PM: AL	PROJ. NO: 27657102.00300	

P:\Sys4\2000026801-Solar2\Exhibits\S2-G-0001-02.dwg, 4/30/2008 1:40:57 PM, gparsons

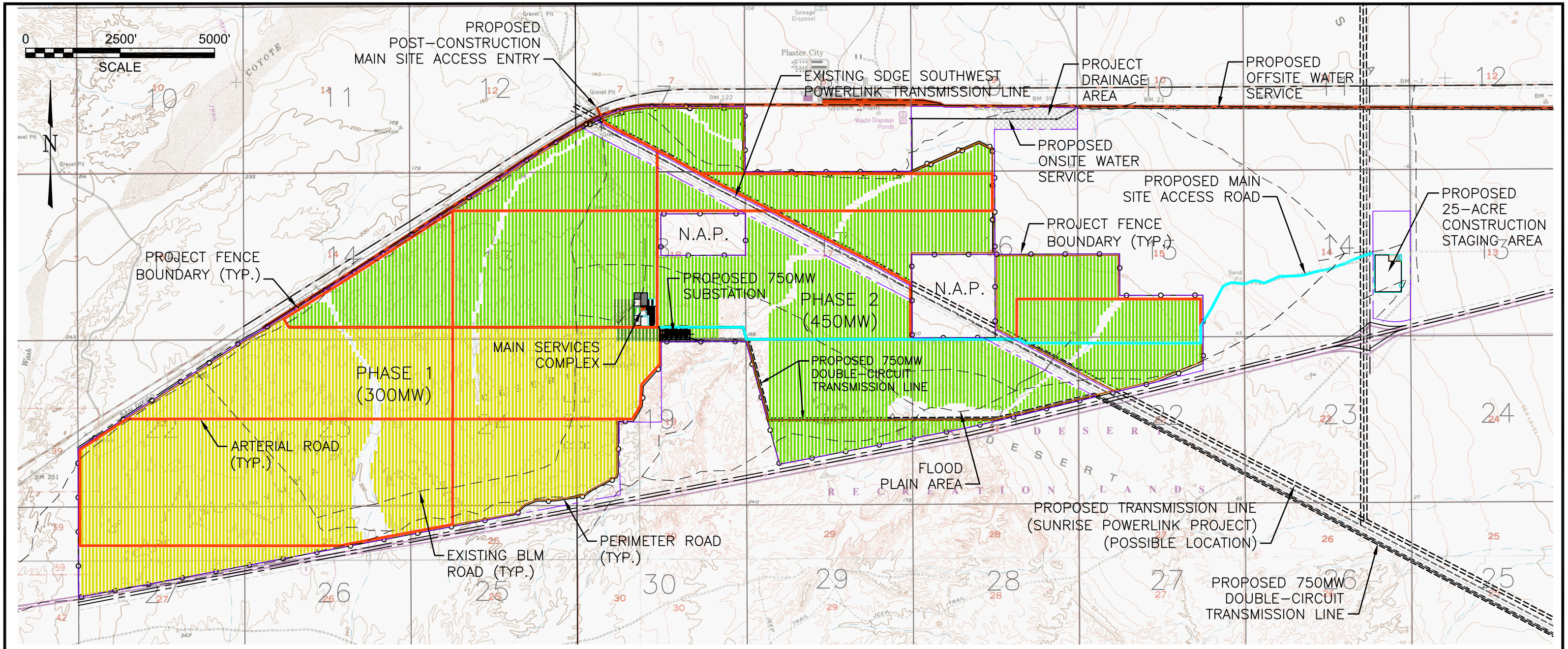

LEGEND

- PROJECT BOUNDARY
- SITE ACCESS ROAD
- 30' MAIN ARTERIAL
- 12' PERIMETER ROAD
- PROPOSED FENCE
- EXIST. BLM DESIGNATED OPEN ROUTES (APPROXIMATE LOCATIONS SHOWN FOR PLANNING PURPOSES ONLY)
- N.A.P. NOT A PART (OWNED BY OTHERS)
- PHASE 1 SUNCATCHERS
- PHASE 2 SUNCATCHERS
- PHASE 2 SUNCATCHERS (FINAL BUILDOUT)

PRELIMINARY

NO.	DATE		BY	APP.
P7	04/28/08	REVISED SITE PLAN	PH	
P8	04/30/08	REVISED WESTERN FENCE BOUNDARY TO MATCH		
		PROPERTY BOUNDARY (PER URS CALCS); REVISED		
		EASTERN ACCESS ROAD (PER URS); FILLED		
		SUNCATCHERS INTO ADDED AREAS	PH	

STANTEC CONSULTING INC.
9400 S.W. BARNES ROAD
STE. 200
PORTLAND, OREGON, 97225
503.297.1631
STANTEC.COM

DRN. STC/GSP	DES. STC/PH	CHK. STC/	DATE 04/09/08
SCALE 1"=3000'		APP.	DATE

SOLAR TWO - SITE PLAN
POST CONSTRUCTION
SOLAR TWO PROJECT

URS

CREATED BY: STANTEC	DATE: 06-11-08	FIG. NO: 3-3
PM: AL	PROJ. NO: 27657102.00300	

P:\Sys4\2000026801-Solar2\Exhibits\S2-G-0001-03.dwg, 4/30/2008 2:05:24 PM, gparsons

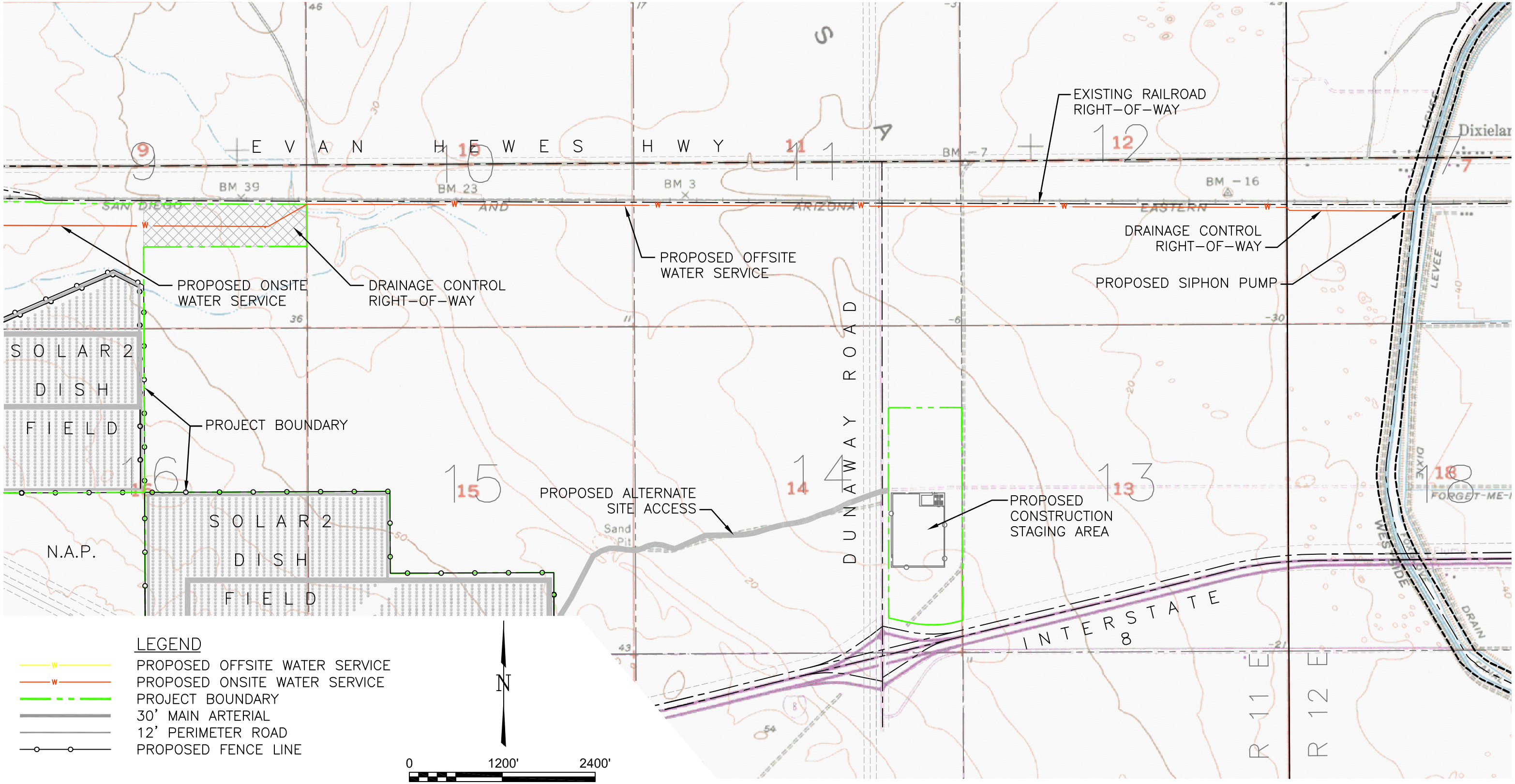

PRELIMINARY

NO.	DATE		BY	APP.
		ADDED DRAINAGE CONTROL ROW; UPDATED LABELS	PH	
P5	04/16/08	REVISED PROP. BOUNDARY; REVISED UTILITY ROUTING;		
		CHANGED TO 750MW SYSTEM	PH	
P6	04/30/08	REVISED PROP. BOUNDARY & ACCESS ROADS;		
		RENAMED "LAYDOWN AREA" TO "STAGING AREA"	PH	

STANTEC CONSULTING INC.
9400 S.W. BARNES ROAD
STE. 200
PORTLAND, OREGON, 97225
503.297.1631
STANTEC.COM

DRN. STC/GSP	DES. STC/PH	CHK. STC/	DATE 03/08/07
SCALE 1"=1200'		APP.	DATE

UTILITY PLAN
OFF-SITE UTILITY SERVICE
SOLAR TWO PROJECT

URS

CREATED BY: STANTEC	DATE: 06-11-08	FIG. NO: 3-4
PM: AL	PROJ. NO: 27657102.00300	

P:\Sys4\2000026801-Solar2\Exhibits\S2-U-0001-02.DWG, 4/30/2008 3:00:55 PM, gparsons

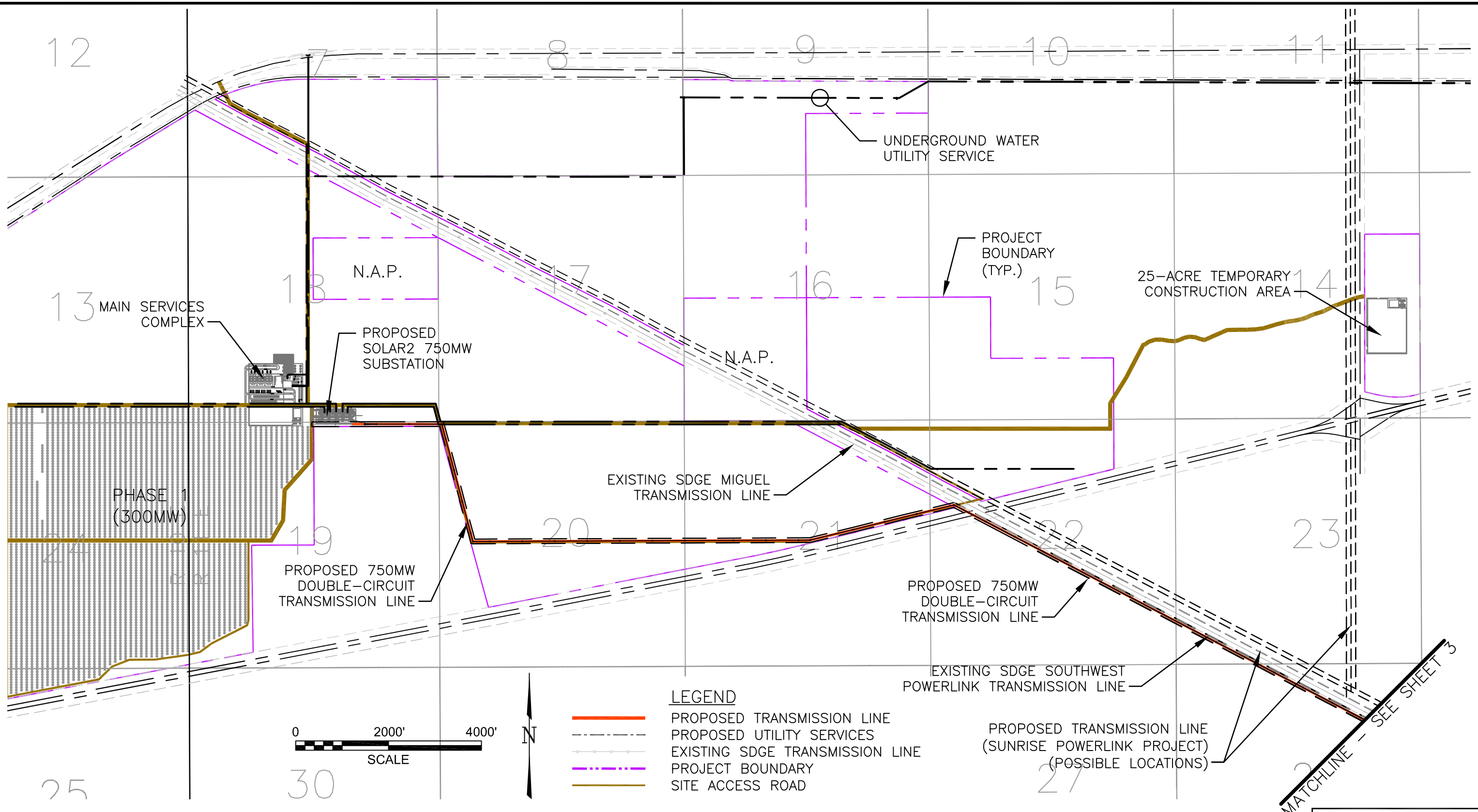

PRELIMINARY

NO.	DATE		BY	APP.
P1	04/23/07	ISSUED FOR PRELIMINARY REVIEW	PH	
P2	06/21/07	ADDED PHASE 1 COLLECTORS	PH	
P3	07/17/07	REVISED PROP. BOUNDARY; ADDED ADMIN. COMPLEX	PH	
P4	04/16/08	REVISED PROP. BOUNDARY; CHANGED TO		
		750MW SYSTEM	PH	

STANTEC CONSULTING INC.
9400 S.W. BARNES ROAD
STE. 200
PORTLAND, OREGON, 97225
503.297.1631
STANTEC.COM

DRN. STC/GSP	DES. STC/PH	CHK. STC/	DATE 01/23/07
SCALE 1"=2000'		APP.	DATE

230-KV TRANSMISSION LINE
PART A, PHASE I
SOLAR TWO PROJECT

URS

CREATED BY: STANTEC	DATE: 06-11-08	FIG. NO: 3-5
PM: AL	PROJ. NO: 27657102.00300	

P:\Sys4\2000026801-Solar2\Exhibits\S2-E-0350-01.dwg, 4/30/2008 3:41:28 PM, gparsons

N

UNDERGROUND WATER UTILITY SERVICE

PROJECT BOUNDARY (TYP.)

25-ACRE TEMPORARY CONSTRUCTION AREA

N.A.P.

MAIN SERVICES COMPLEX

PROPOSED SOLAR2 750MW SUBSTATION

PHASE 2 (450MW)

N.A.P.

EXISTING SDGE MIGUEL TRANSMISSION LINE

PHASE 1 (300MW)

PROPOSED 750MW DOUBLE-CIRCUIT TRANSMISSION LINE

PROPOSED 750MW DOUBLE-CIRCUIT TRANSMISSION LINE

EXISTING SDGE SOUTHWEST POWERLINK TRANSMISSION LINE

PROPOSED TRANSMISSION LINE (SUNRISE POWERLINK PROJECT) (POSSIBLE LOCATIONS)

MATCHLINE - SEE SHEET 3

LEGEND

- PROPOSED TRANSMISSION LINE
- PROPOSED UTILITY SERVICES
- EXISTING SDGE TRANSMISSION LINE
- PROJECT BOUNDARY
- SITE ACCESS ROAD

PRELIMINARY

NO.	DATE		BY	APP.
P2	06/21/07	ADDED PHASE 1 COLLECTORS	PH	
P3	07/17/07	REVISED PROP. BOUNDARY; ADDED ADMIN. COMPLEX	PH	
P4	04/16/08	REVISED PROP. BOUNDARY; CHANGED TO		
		750MW SYSTEM	PH	
P5	04/30/08	REVISED SITE BOUNDARY	PH	

STANTEC CONSULTING INC.
9400 S.W. BARNES ROAD
STE. 200
PORTLAND, OREGON, 97225
503.297.1631
STANTEC.COM

DRN. STC/GSP	DES. STC/PH	CHK. STC/	DATE 01/23/07
SCALE 1"=2000'		APP.	DATE

230-KV TRANSMISSION LINE
PART A, PHASE II
SOLAR TWO PROJECT

URS

CREATED BY: STANTEC	DATE: 06-11-08	FIG. NO: 3-6
PM: AL	PROJ. NO: 27657102.00300	

P:\Sys4\2000026801-Solar2\Exhibits\S2-E-0350-02.dwg, 4/30/2008 3:54:18 PM, gparsons

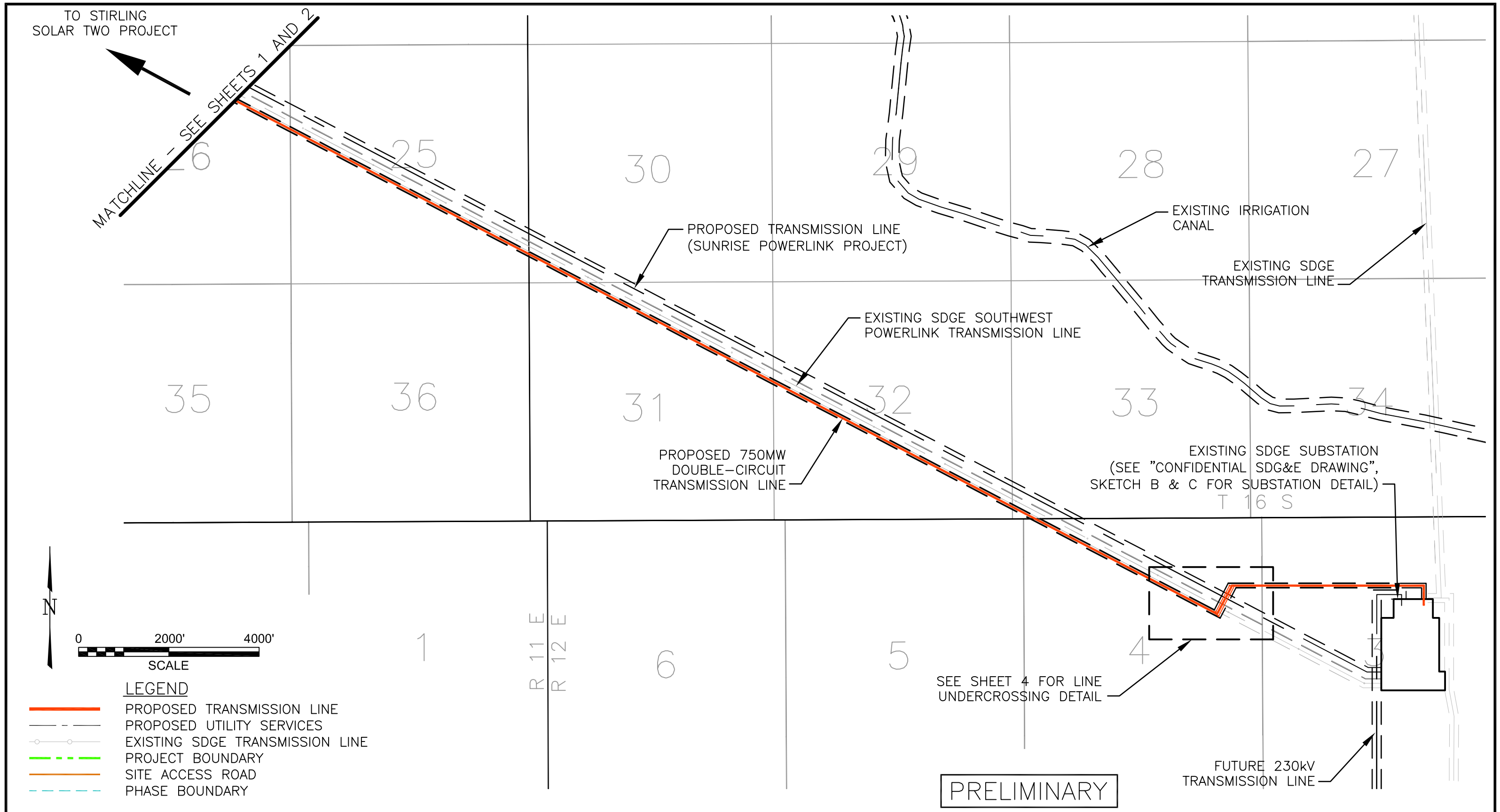

LEGEND

- PROPOSED TRANSMISSION LINE
- PROPOSED UTILITY SERVICES
- EXISTING SDGE TRANSMISSION LINE
- PROJECT BOUNDARY
- SITE ACCESS ROAD
- PHASE BOUNDARY

NO.	DATE		BY	APP.
P1	04/23/07	ISSUED FOR PRELIMINARY REVIEW	PH	
P2	04/16/08	CHANGED TO 750MW SYSTEM	PH	

STANTEC CONSULTING INC.
9400 S.W. BARNES ROAD
STE. 200
PORTLAND, OREGON, 97225
503.297.1631
STANTEC.COM

DRN. STC/GSP	DES. STC/PH	CHK. STC/	DATE 03/06/07
SCALE 1"=2000'		APP.	DATE

230-KV TRANSMISSION LINE
PART B
SOLAR TWO PROJECT

URS

CREATED BY: STANTEC	DATE: 06-11-08	FIG. NO: 3-7
PM: AL	PROJ. NO: 27657102.00300	

P:\Sys4\2000026801-Solar2\Exhibits\S2-E-0350-03.dwg, 4/16/2008 4:10:18 PM, gparsons

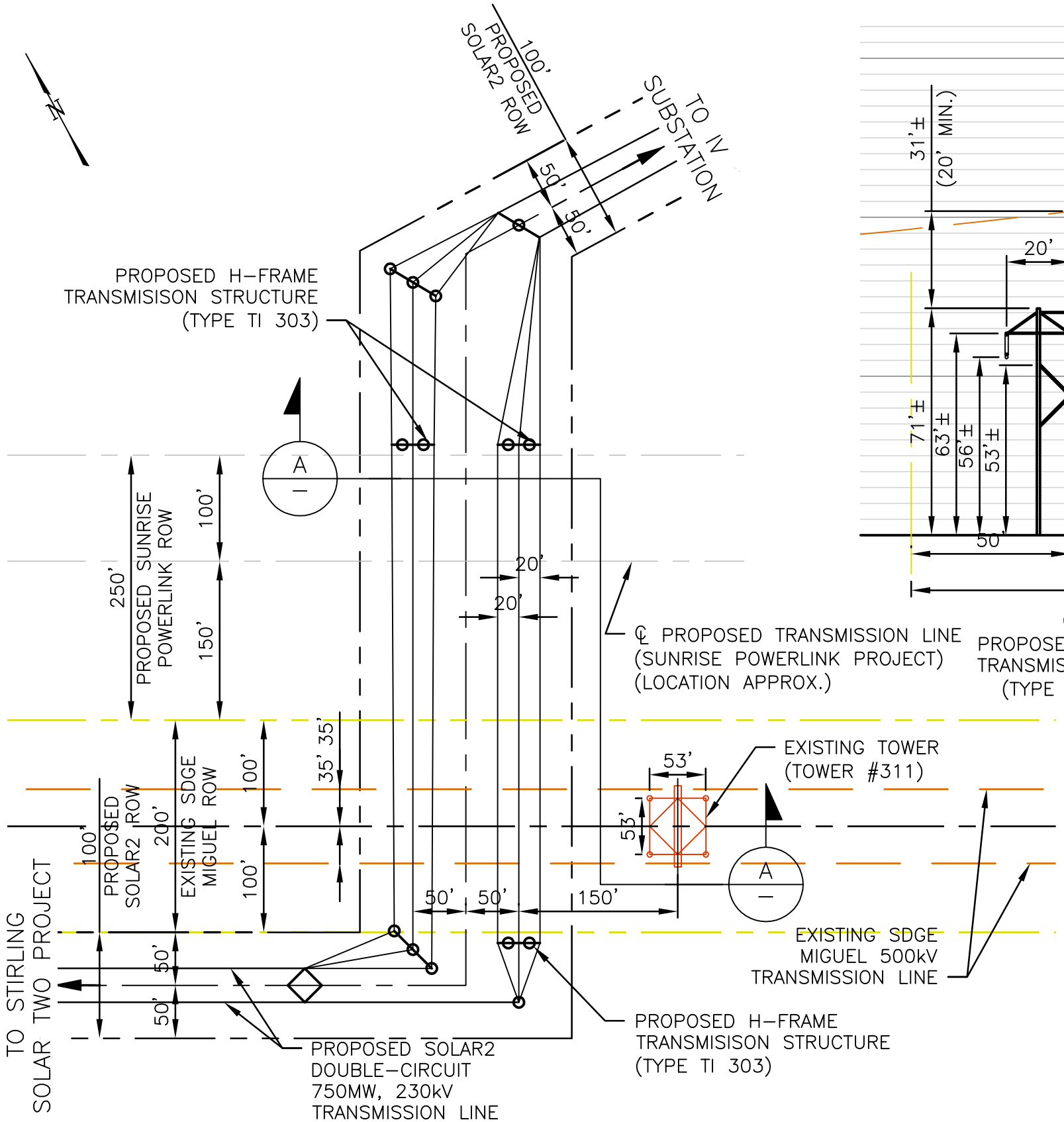

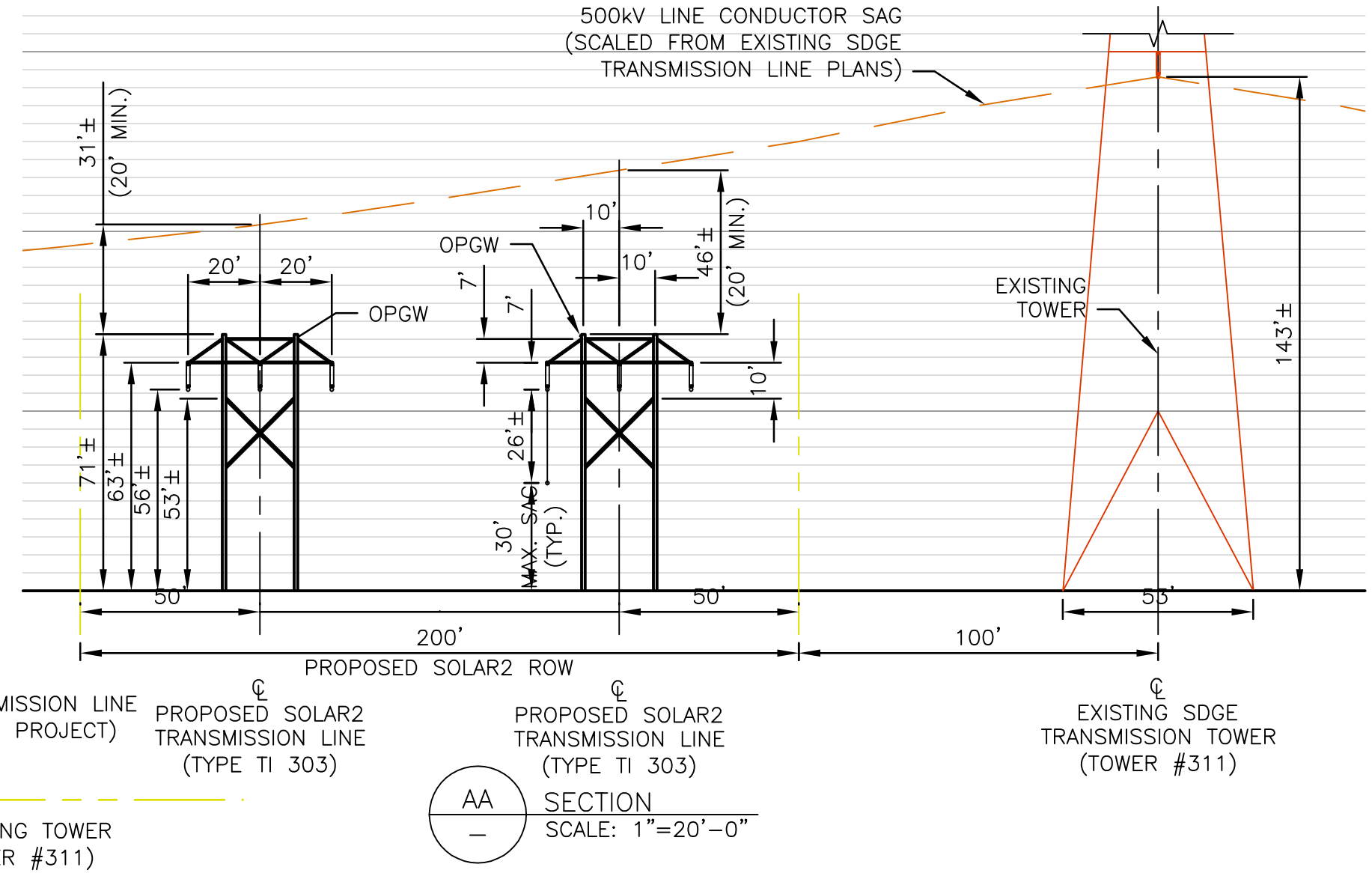

AA
—
SECTION
SCALE: 1"=20'-0"

PRELIMINARY

NO.	DATE		BY	APP.
P1	04/23/07	ISSUED FOR PRELIMINARY REVIEW	PH	
P2	04/16/08	CHANGED TO 750MW SUBSTATION DESIGN	PH	

STANTEC CONSULTING INC.
9400 S.W. BARNES ROAD
STE. 200
PORTLAND, OREGON, 97225
503.297.1631
STANTEC.COM

DRN. STC/GSP	DES. STC/PH	CHK. STC/	DATE 03/19/07
SCALE		APP.	DATE

230-KV TRANSMISSION LINE, PART B
UNDER CROSSING DETAIL
SOLAR TWO PROJECT

URS

CREATED BY: STANTEC	DATE: 06-11-08	FIG. NO: 3-8
PM: AL	PROJ. NO: 27657102.00300	

P:\Sys4\2000026801-Solar2\Exhibits\S2-E-0350-04.dwg, 4/16/2008 2:55:38 PM, slee

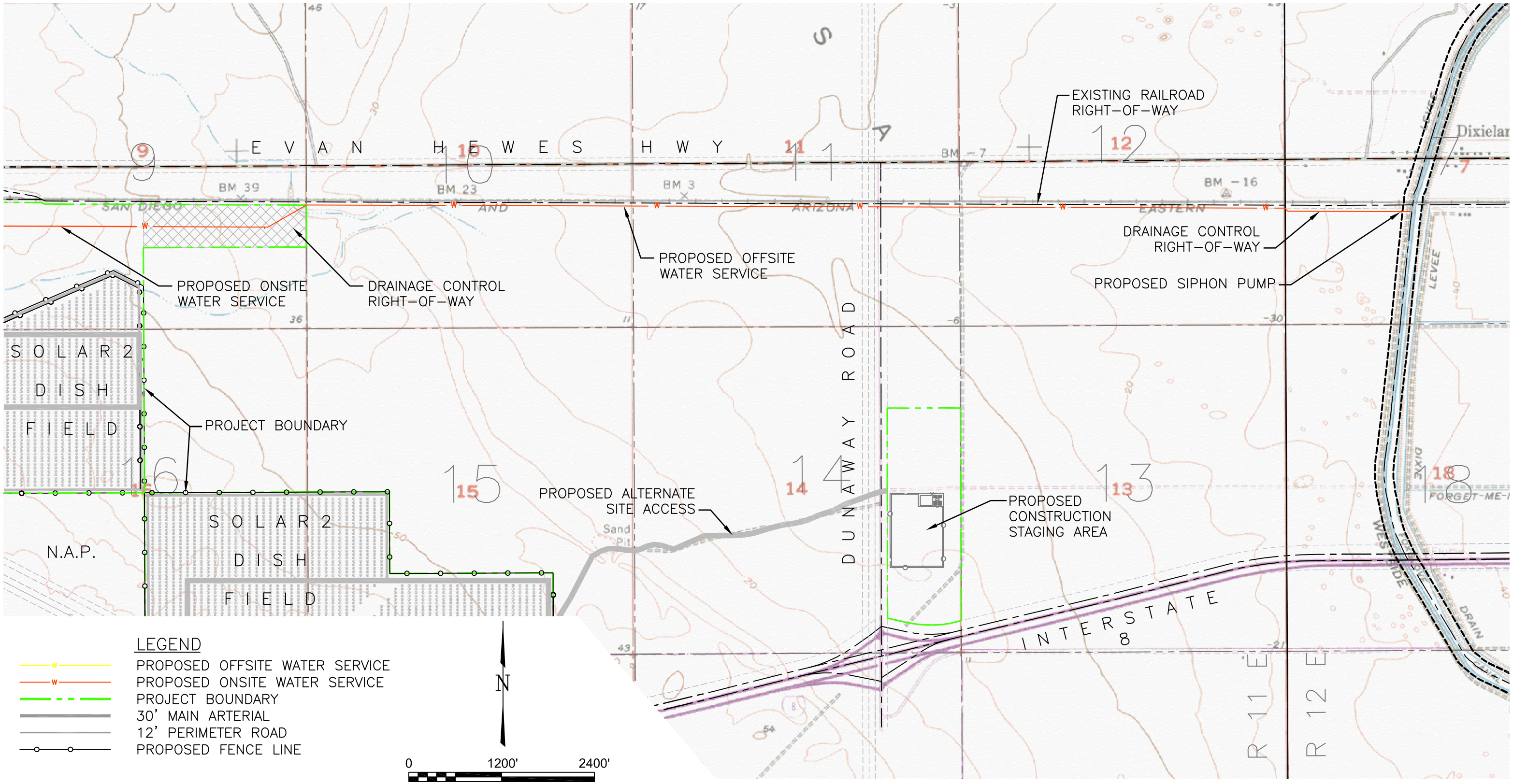

PRELIMINARY

NO.	DATE		BY	APP.
		ADDED DRAINAGE CONTROL ROW; UPDATED LABELS	PH	
P5	04/16/08	REVISED PROP. BOUNDARY; REVISED UTILITY ROUTING;		
		CHANGED TO 750MW SYSTEM	PH	
P6	04/30/08	REVISED PROP. BOUNDARY & ACCESS ROADS;		
		RENAMED "LAYDOWN AREA" TO "STAGING AREA"	PH	

STANTEC CONSULTING INC.
9400 S.W. BARNES ROAD
STE. 200
PORTLAND, OREGON, 97225
503.297.1631
STANTEC.COM

DRN. STC/GSP	DES. STC/PH	CHK. STC/	DATE 03/08/07
SCALE 1"=1200'		APP.	DATE

UTILITY PLAN
ON-SITE UTILITY SERVICE
SOLAR TWO PROJECT

URS

CREATED BY: STANTEC	DATE: 06-11-08	FIG. NO: 3-9
PM: AL	PROJ. NO: 27657102.00300	

P:\Sys4\2000026801-Solar2\Exhibits\S2-U-0001-02.DWG, 4/30/2008 3:00:55 PM, gparsons

EXISTING COLOR PHOTOGRAPHIC REPRODUCTION DEPICTING THE VISUAL APPEARANCE OF THE SITE PRIOR TO CONSTRUCTION

URS	CREATED BY: JW	DATE: 06-16-08	FIG. NO:
	PM: AL	PROJ. NO: 27657102.00300	3-10A

Path: G:\gis\projects\1577\22238980\mxd\title_blocks\section_3\section_3_10_a_.mxd, 06/16/08,

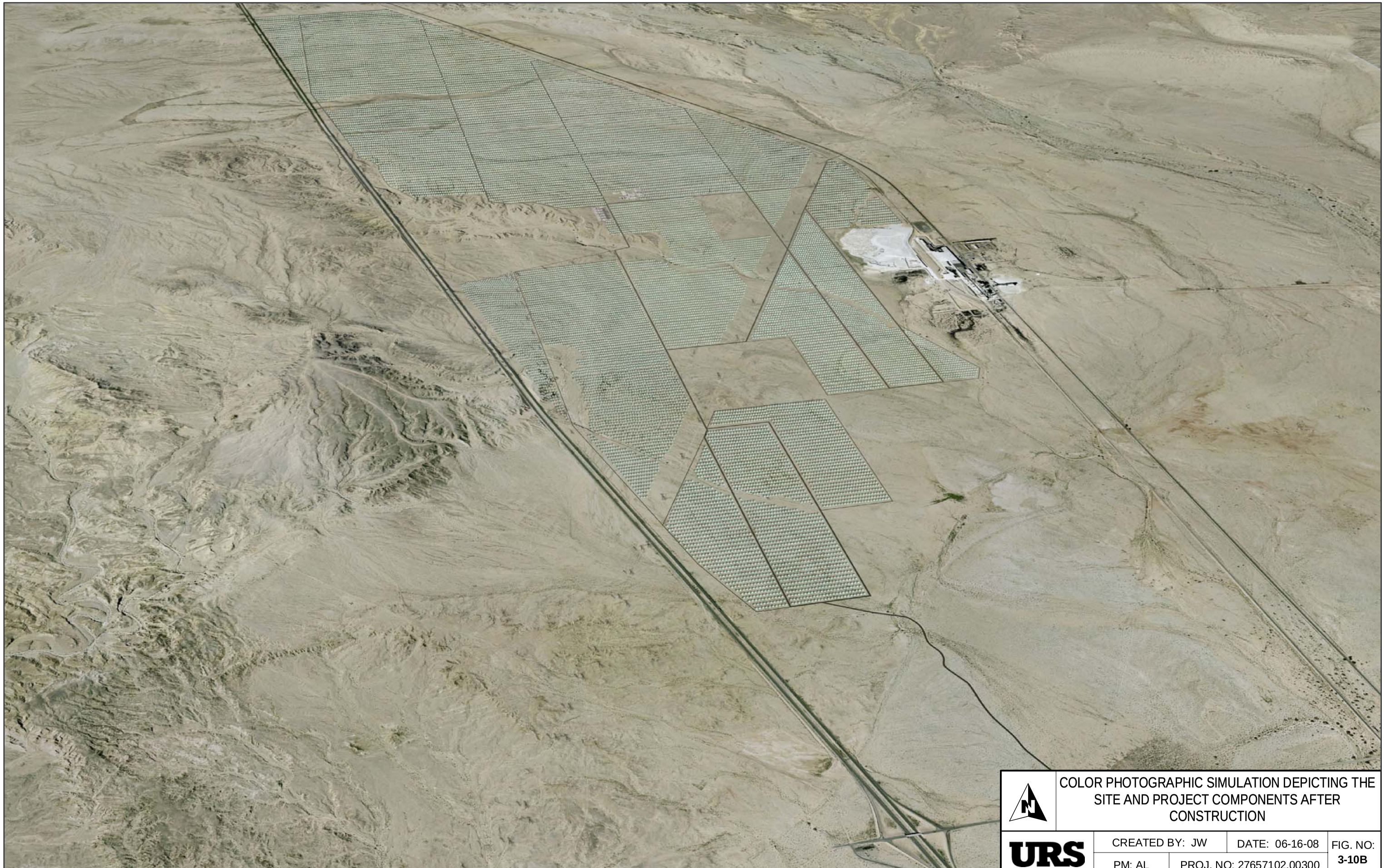

COLOR PHOTOGRAPHIC SIMULATION DEPICTING THE SITE AND PROJECT COMPONENTS AFTER CONSTRUCTION

URS	CREATED BY: JW	DATE: 06-16-08	FIG. NO: 3-10B
	PM: AL	PROJ. NO: 27657102.00300	

Path: G:\gis\projects\1577\22238980\mxd\title_blocks\section_3\section_3_10_b_.mxd, 06/16/08,

COLOR PHOTOGRAPHIC SIMULATION CLOSE-UP OF THE SITE AFTER CONSTRUCTION
SOLAR TWO PROJECT

URS	CREATED BY: JW	DATE: 06-16-08	FIG. NO: 3-10C
	PM: AL	PROJ. NO: 27657102.00300	

Path: G:\gis\projects\1577\22238980\mxd\title_blocks\section_3\section_3_10_c_.mxd, 06/16/08,

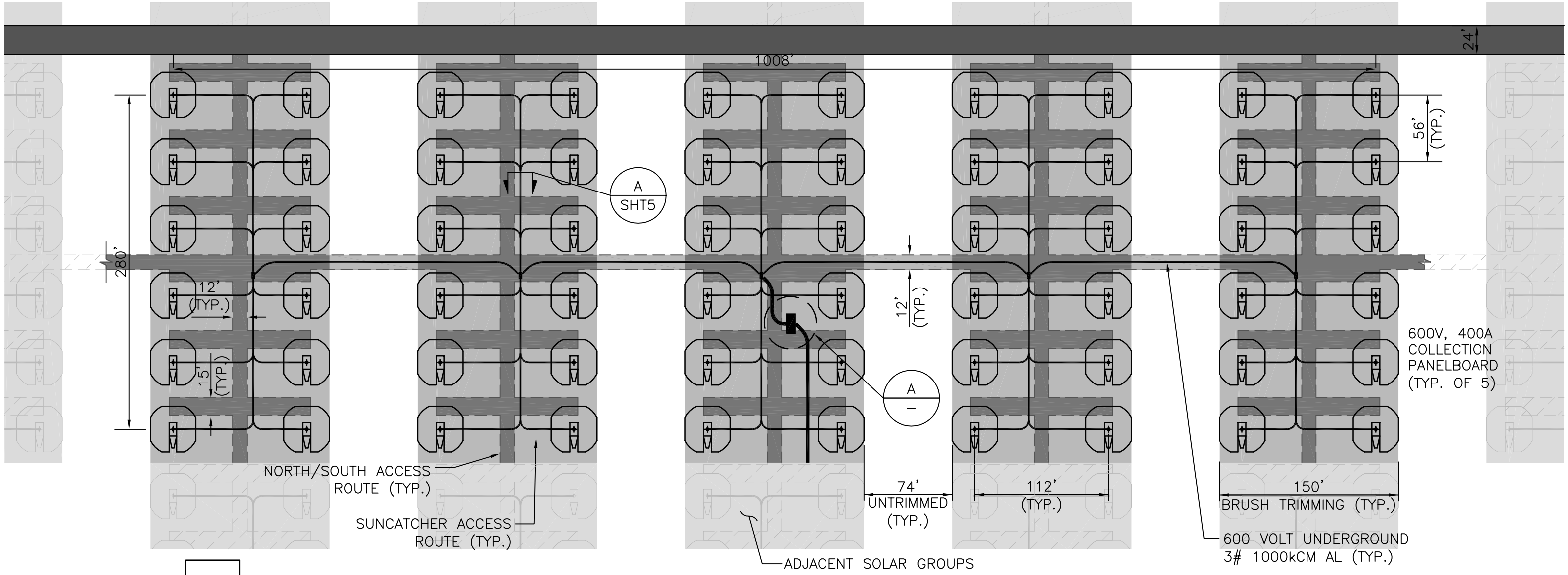

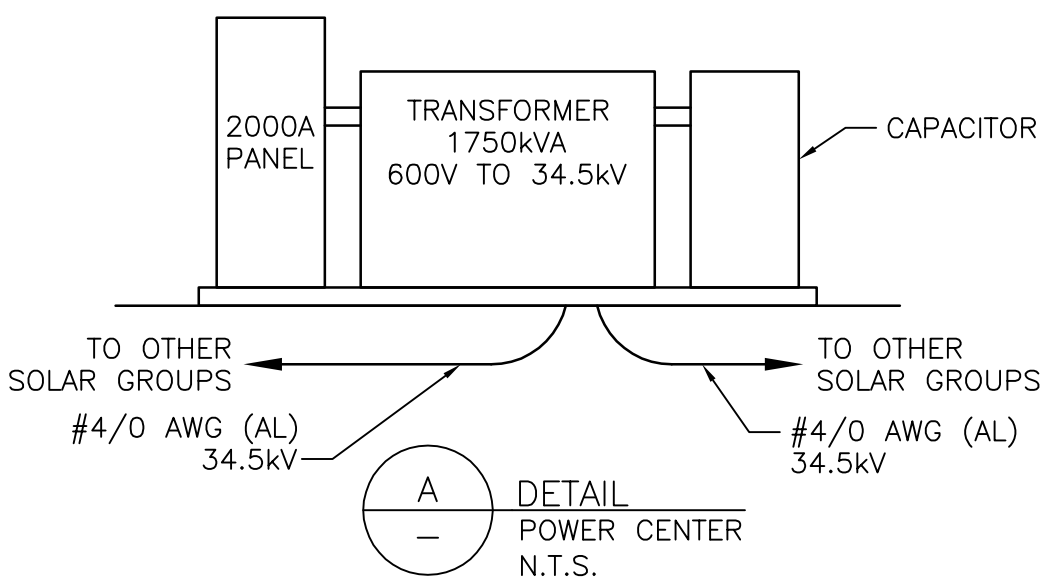

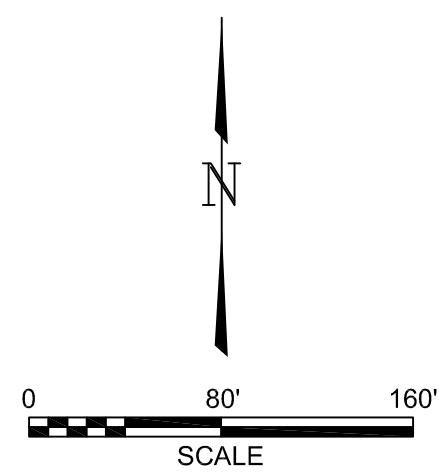

LEGEND

- BRUSH TRIMMING
- PAVED ROADWAYS
- UNPAVED ACCESS ROUTE
- SUNCATCHER UNIT

NOTES

1. THIS IS A REPRESENTATION (BUT NOT NECESSARILY TYPICAL) OF A 1.5MW SOLAR GROUP. THE 1.5MW SOLAR GROUPS WILL BE ARRANGED TO FIT THE CONTOURS OF THE SITE.
2. ONE 1.5MW SOLAR GROUP IS COMPRISED OF SIXTY (60) SUNCATCHER UNITS CONNECTED INTO FIVE (5) TWELVE–UNIT GROUPS CONNECTED TO A 600V, 400A COLLECTION PANELBOARD.

PRELIMINARY

NO.	DATE		BY	APP.
P1	04/23/07	ISSUED FOR PRELIMINARY REVIEW	PH	
P2	07/25/07	'CLEARING' REFERENCES CHANGES TO 'TRIMMING'	PH	
P3	02/27/08	RELOCATED ACCESS ROUTE	PH	
P4	04/16/08	REVISED CABLE TYPE	PH	

STANTEC CONSULTING INC.
9400 S.W. BARNES ROAD
STE. 200
PORTLAND, OREGON, 97225
503.297.1631
STANTEC.COM

DRN. STC/GSP	DES. STC/PH	CHK. STC/	DATE 03/07/07
SCALE 1"=80'–0"		APP.	DATE

SOLAR TWO 1.5-MW
SOLAR GROUP PLAN
SOLAR TWO PROJECT

URS

CREATED BY: STANTEC	DATE: 06-11-08	FIG. NO: 3-11
PM: AL	PROJ. NO: 27657102.00300	

P:\Sys4\2000026801-Solar2\Exhibits\S2-G-0002-01.dwg, 4/16/2008 1:47:03 PM, slee

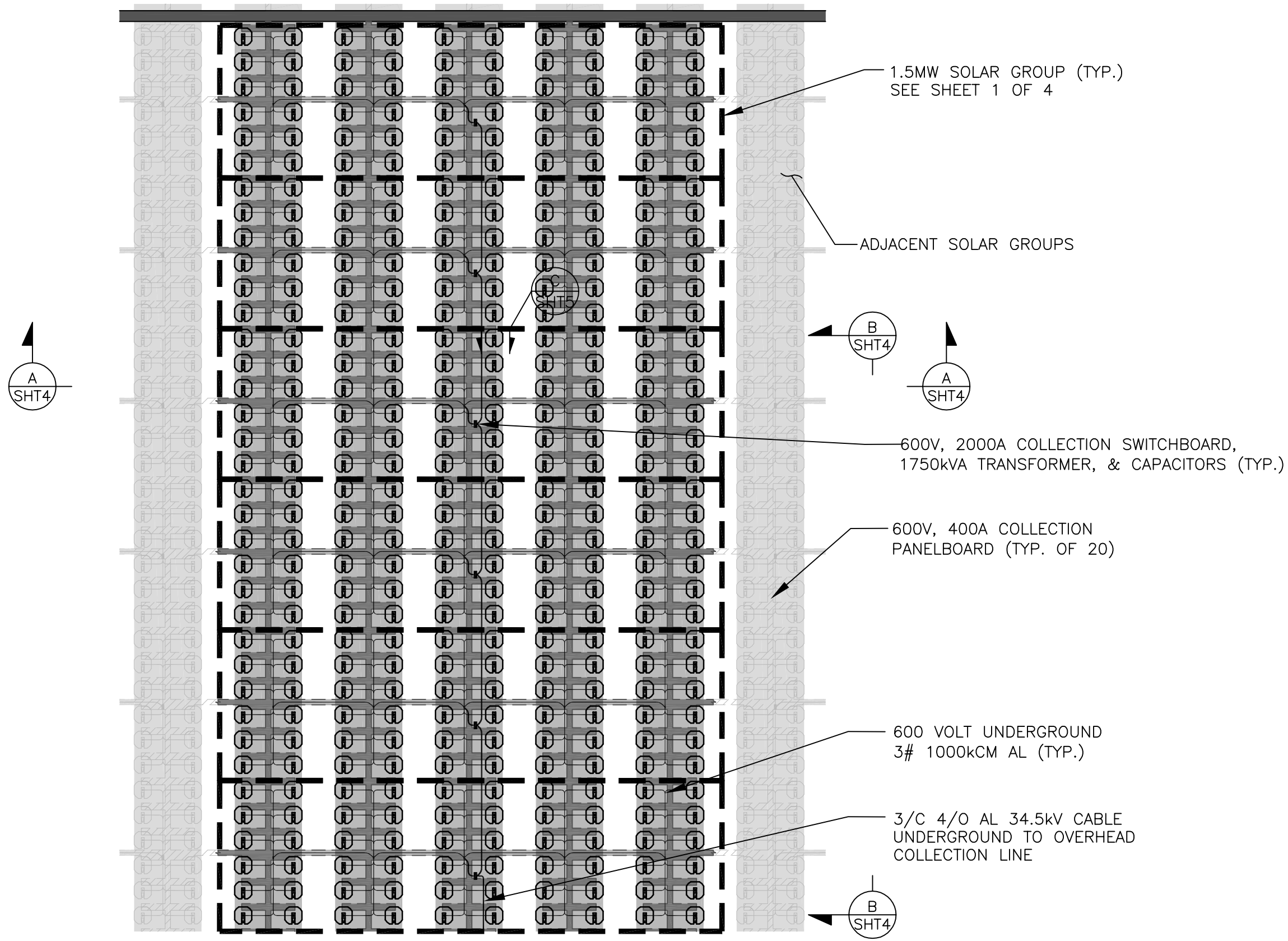

LEGEND

- BRUSH TRIMMING
- PAVED ROADWAYS
- UNPAVED ACCESS ROUTE
- SUNCATCHER UNIT

NOTES

1. THIS IS A REPRESENTATION (BUT NOT NECESSARILY TYPICAL) OF AN 9MW SOLAR GROUP. THE 9MW SOLAR GROUPS WILL BE ARRANGED TO FIT THE CONTOURS OF THE SITE.
2. THE SIX (6) 1.5MW SOLAR GROUPS ARE CONNECTED IN SERIES TO THE RISER TO THE OVERHEAD 34.5kV COLLECTION LINE BY 34.5kV UNDERGROUND CABLES

N

0 160' 320'
SCALE

PRELIMINARY

NO.	DATE		BY	APP.
P1	04/23/07	ISSUED FOR PRELIMINARY REVIEW	PH	
P2	07/25/07	'CLEARING' REFERENCES CHANGES TO 'TRIMMING'	PH	
P3	02/27/08	RELOCATED ACCESS ROUTE	PH	
P4	04/16/08	REVISED 9MW	PH	

Stantec
STANTEC CONSULTING INC.
9400 S.W. BARNES ROAD
STE. 200
PORTLAND, OREGON, 97225
503.297.1631
STANTEC.COM

DRN. STC/GSP	DES. STC/PH	CHK. STC/	DATE 03/07/07
SCALE 1"=160'-0"		APP.	DATE

SOLAR TWO 9-MW
SOLAR GROUP PLAN
SOLAR TWO PROJECT

URS

CREATED BY: STANTEC	DATE: 06-11-08	FIG. NO: 3-12
PM: AL	PROJ. NO: 27657102.00300	

P:\Sys4\2000026801-Solar2\Exhibits\S2-G-0002-02.dwg, 4/16/2008 1:39:30 PM, slee

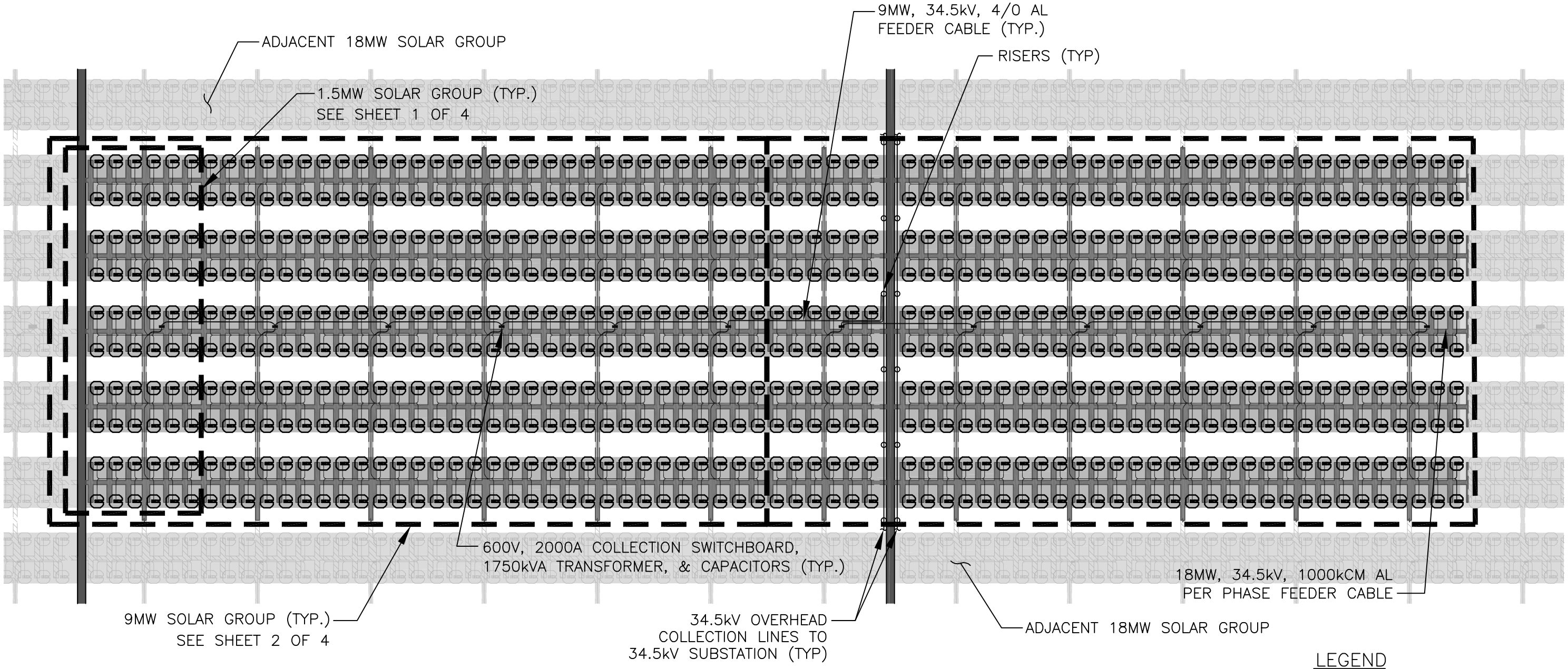

N

0 300' 600'

SCALE

LEGEND

- BRUSH TRIMMING
- PAVED ROADWAYS
- UNPAVED ACCESS ROUTE
- SUNCATCHER UNIT

NOTE

THIS IS A REPRESENTATION (BUT NOT NECESSARILY TYPICAL) OF AN 18MW SOLAR GROUP. THE 18MW SOLAR GROUPS WILL BE ARRANGED TO FIT THE CONTOURS OF THE SITE.

PRELIMINARY

NO.	DATE		BY	APP.
P1	04/23/07	ISSUED FOR PRELIMINARY REVIEW	PH	
P2	07/25/07	'CLEARING' REFERENCES CHANGES TO 'TRIMMING'	PH	
P3	02/27/08	RELOCATED ACCESS ROUTE	PH	
P4	04/16/08	REV. CABLE TYPE; 9MW GROUPS & OH COLL.	PH	

STANTEC CONSULTING INC.
9400 S.W. BARNES ROAD
STE. 200
PORTLAND, OREGON, 97225
503.297.1631
STANTEC.COM

DRN. STC/GSP	DES. STC/PH	CHK. STC/	DATE 03/07/07
SCALE 1"=300'-0"		APP.	DATE

SOLAR TWO 18-MW
SOLAR GROUP PLAN
SOLAR TWO PROJECT

URS

CREATED BY: STANTEC	DATE: 06-11-08	FIG. NO:
PM: AL	PROJ. NO: 27657102.00300	3-13

P:\Sys4\2000026801-Solar2\Exhibits\S2-G-0002-03.dwg, 4/16/2008 1:49:20 PM, slee

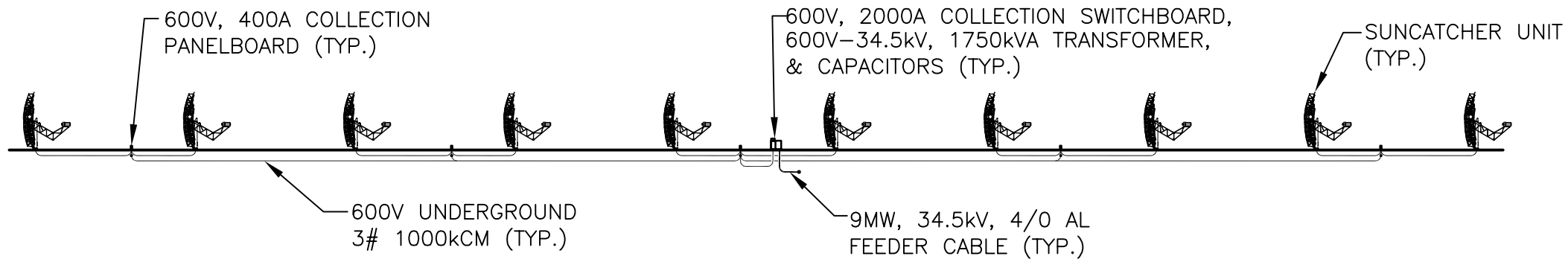

AA / – SECTION (LOOKING NORTH)
(SUNCATCHER UNITS FACING EAST)
SCALE: 1"=100'

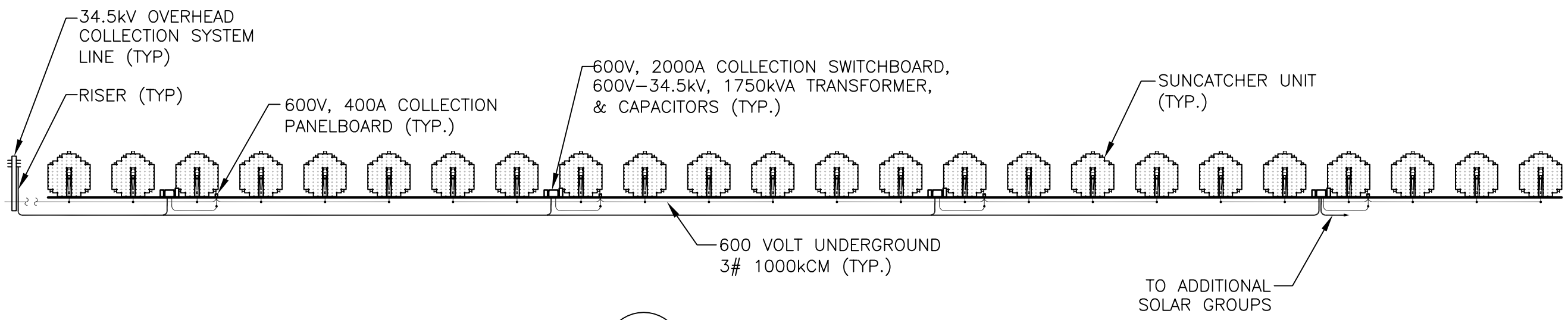

BB / – SECTION (LOOKING WEST)
(SUNCATCHER UNITS FACING EAST)
SCALE: 1"=100'

PRELIMINARY

NO.	DATE		BY	APP.
P1	04/23/07	ISSUED FOR PRELIMINARY REVIEW	PH	
P2	04/16/08	REV. CABLE TYPE & OH COLL.	PH	

STANTEC CONSULTING INC.
9400 S.W. BARNES ROAD
STE. 200
PORTLAND, OREGON, 97225
503.297.1631
STANTEC.COM

DRN. STC/GSP	DES. STC/PH	CHK. STC/	DATE 03/07/07
SCALE AS SHOWN		APP.	DATE

SOLAR TWO
TYPICAL ELEVATION VIEW
SOLAR TWO PROJECT

URS

CREATED BY: STANTEC	DATE: 06-11-08	FIG. NO: 3-14
PM: AL	PROJ. NO: 27657102.00300	

P:\Sys4\2000026801-Solar2\Exhibits\S2-G-0002-04.dwg, 4/16/2008 1:50:11 PM, slee

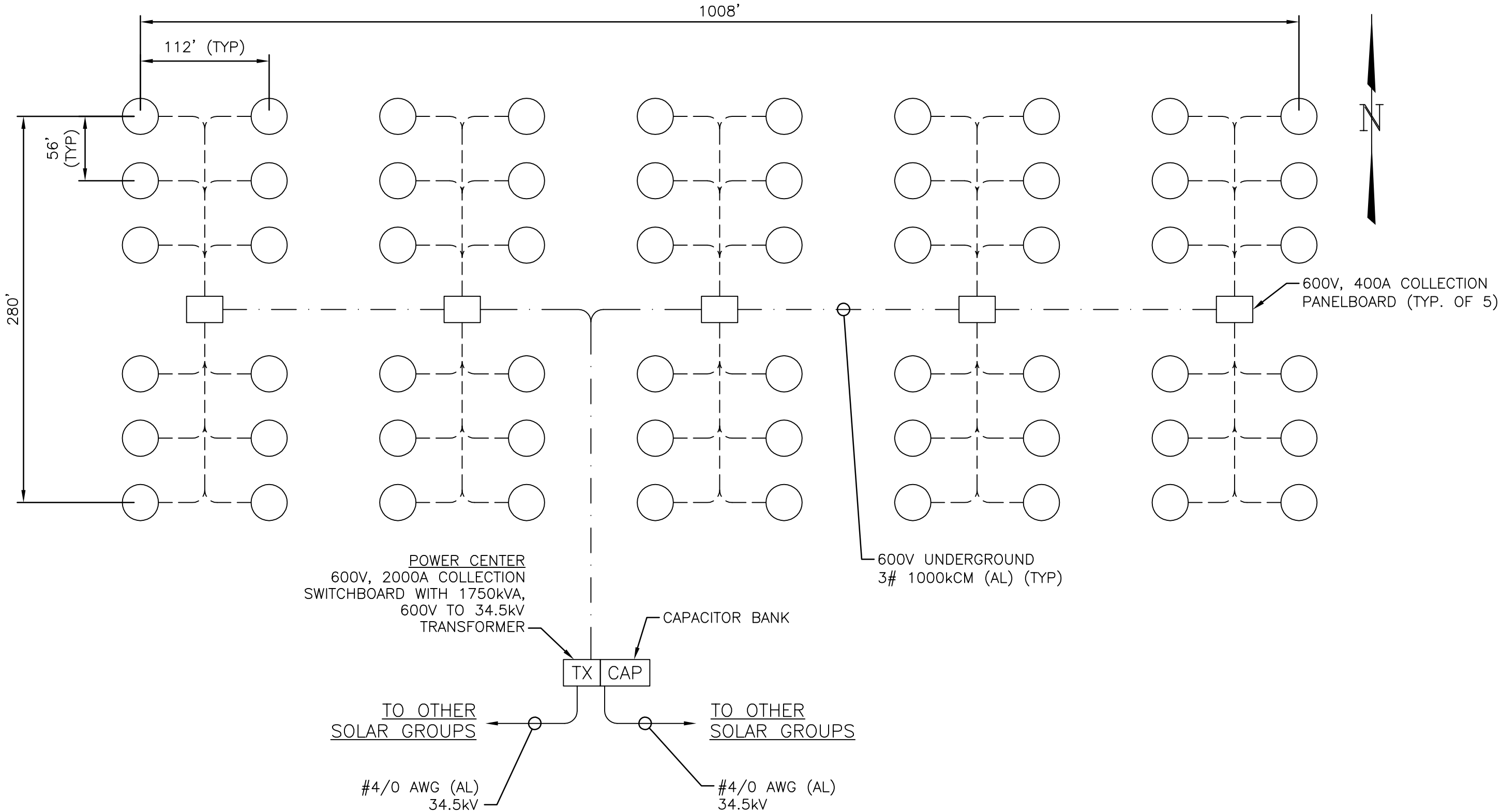

PRELIMINARY

NO.	DATE		BY	APP.
P1	04/23/07	ISSUED FOR PRELIMINARY REVIEW	PH	
P2	04/16/08	ISSUED FOR PRELIMINARY REVIEW	PH	

STANTEC CONSULTING INC.
9400 S.W. BARNES ROAD
STE. 200
PORTLAND, OREGON, 97225
503.297.1631
STANTEC.COM

DRN 01/23/07	DES. STC/GSP	CHK. STC/PH	DATE STC/
SCALE NONE		APP.	DATE

1.5-MW SOLAR GROUP ELECTRICAL ONE-LINE DIAGRAM, SHEET 1 SOLAR TWO PROJECT

URS

CREATED BY: STANTEC	DATE: 06-11-08	FIG. NO: 3-15
PM: AL	PROJ. NO: 27657102.00300	

P:\Sys4\2000026801-Solar2\Exhlbits\S2-E-0001-01.DWG, 4/16/2008 11:47:05 AM, slee

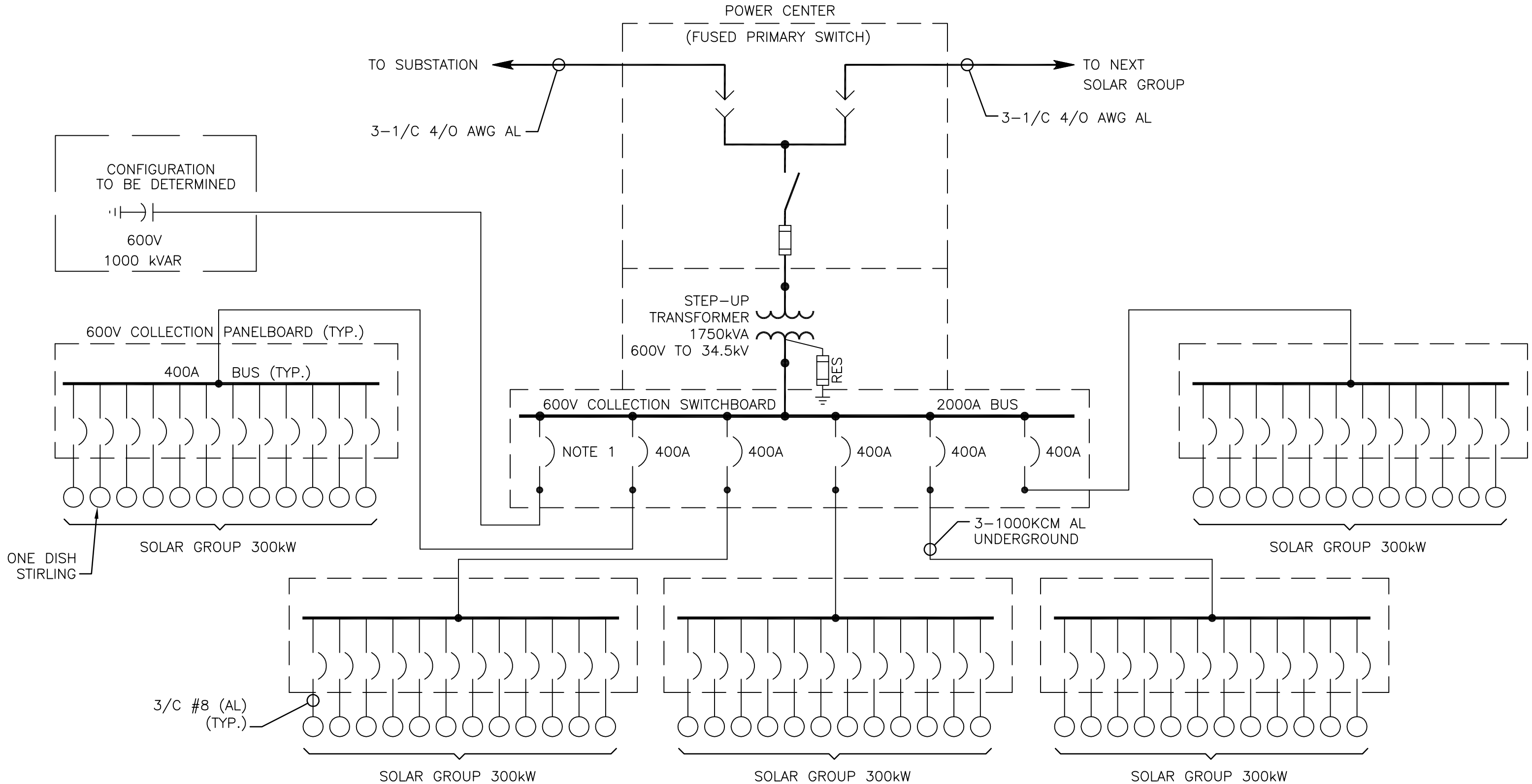

PRELIMINARY

NO.	DATE		BY	APP.
P1	04/23/07	ISSUED FOR PRELIMINARY REVIEW	PH	
P2	04/16/08	ISSUED FOR PRELIMINARY REVIEW	PH	

STANTEC CONSULTING INC.
9400 S.W. BARNES ROAD
STE. 200
PORTLAND, OREGON, 97225
503.297.1631
STANTEC.COM

DRN. STC/GSP	DES. STC/PH	CHK. STC/	DATE 01/23/07
SCALE NONE		APP.	DATE

1.5-MW SOLAR GROUP ELECTRICAL ONE-LINE DIAGRAM, SHEET 2
SOLAR TWO PROJECT

URS

CREATED BY: STANTEC	DATE: 06-11-08	FIG. NO: 3-16
PM: AL	PROJ. NO: 27657102.00300	

P:\Sys4\2000026801-Solar2\Exhibits\S2-E-0001-02.DWG, 4/16/2008 11:47:47 AM, slee

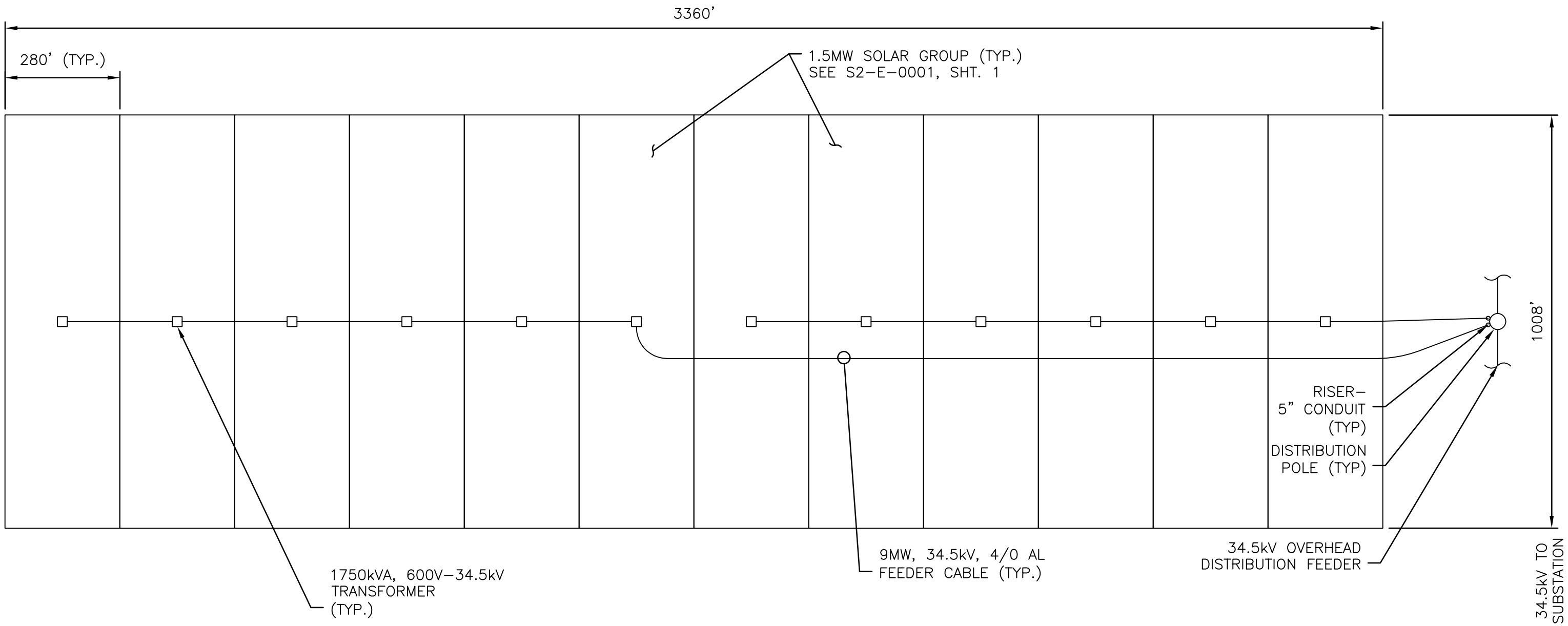

PRELIMINARY

NO.	DATE		BY	APP.
P1	04/23/07	ISSUED FOR PRELIMINARY REVIEW	PH	
P2	04/15/08	ISSUED FOR PRELIMINARY REVIEW	PH	

STANTEC CONSULTING INC.
9400 S.W. BARNES ROAD
STE. 200
PORTLAND, OREGON, 97225
503.297.1631
STANTEC.COM

DRN. STC/GSP	DES. STC/PH	CHK. STC/	DATE 01/22/07
SCALE 1"=240'		APP.	DATE

SOLAR TWO – 18-MW FEEDER GROUP
GENERAL ARRANGEMENT
SOLAR TWO PROJECT

URS

CREATED BY: STANTEC	DATE: 06-11-08	FIG. NO:
PM: AL	PROJ. NO: 27657102.00300	3-17

P:\Sys4\2000026801-Solar2\Exhibits\S2-E-0002-01.dwg, 4/16/2008 2:29:19 PM, slee

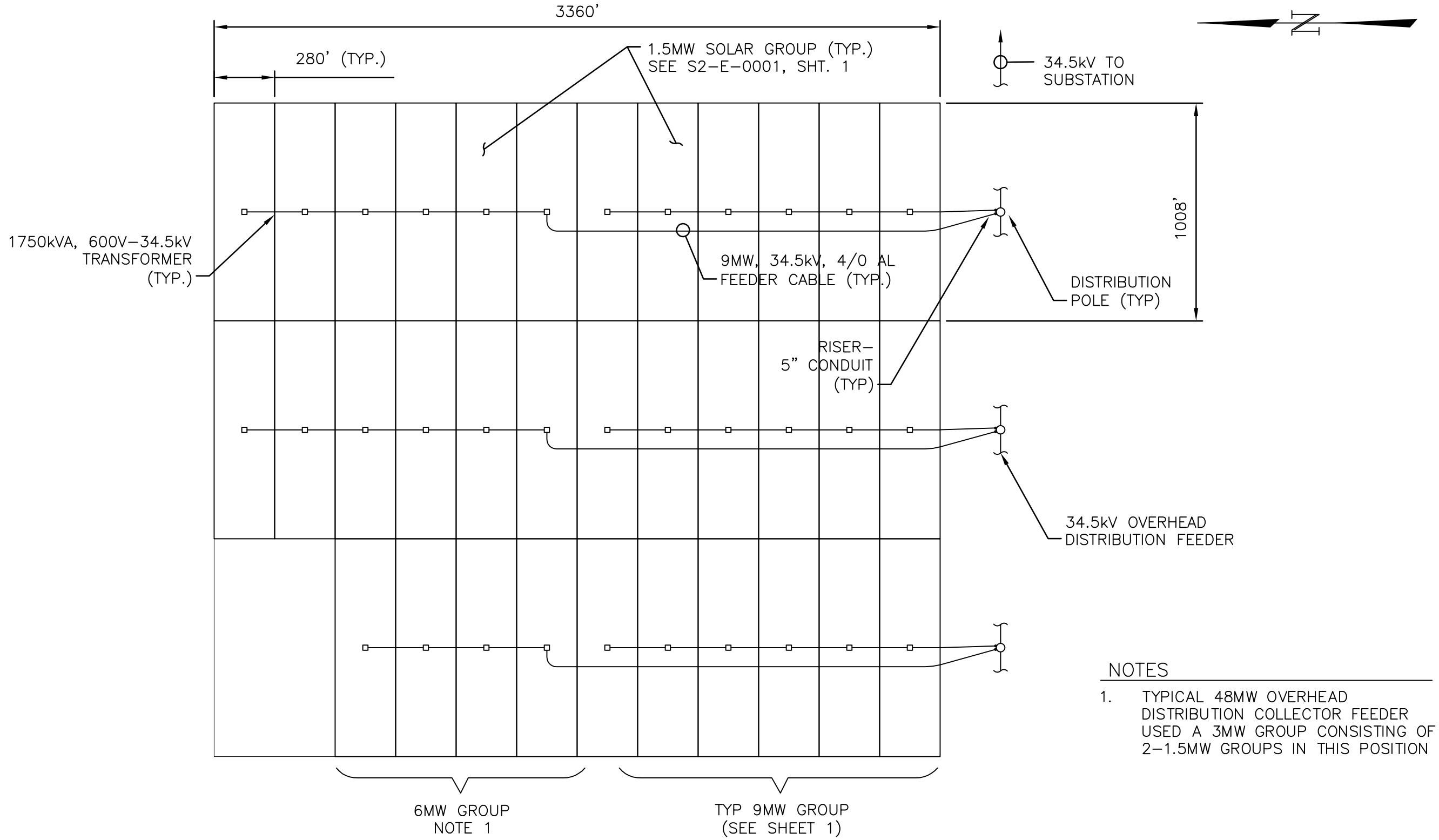

TYPICAL 51MW OVERHEAD DISTRIBUTION COLLECTOR FEEDER

NOTES

1. TYPICAL 48MW OVERHEAD DISTRIBUTION COLLECTOR FEEDER USED A 3MW GROUP CONSISTING OF 2-1.5MW GROUPS IN THIS POSITION

PRELIMINARY

NO.	DATE		BY	APP.
P1	04/16/08	ISSUED FOR PRELIMINARY REVIEW	PH	

STANTEC CONSULTING INC.
9400 S.W. BARNES ROAD
STE. 200
PORTLAND, OREGON, 97225
503.297.1631
STANTEC.COM

DRN. STC/SCL	DES. STC/PH	CHK. STC/	DATE 04/15/08
SCALE 1"=400'		APP.	DATE

SOLAR TWO – 51-MW FEEDER GROUP
GENERAL ARRANGEMENT
SOLAR TWO PROJECT

URS

CREATED BY: STANTEC	DATE: 06-11-08	FIG. NO:
PM: AL	PROJ. NO: 27657102.00300	3-18

P:\Sys4\2000026801-Solar2\Exhibits\S2-E-0002-02.dwg, 4/16/2008 2:12:24 PM, slee

FIGURE 3.4-13
Integrated Metal-Fin Pipe Foundation/Pedestal

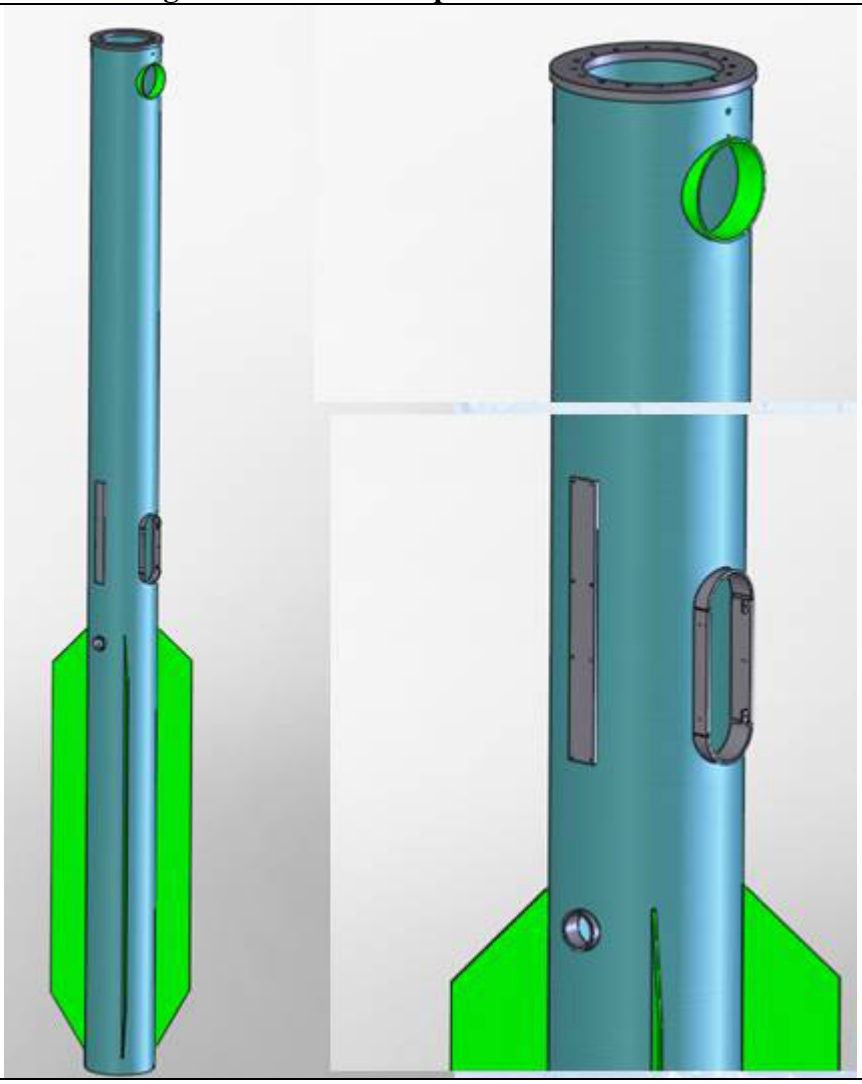

	INTEGRATED METAL FIN PIPE FOUNDATION/PEDESTAL SOLAR TWO PROJECT		
URS	CREATED BY: STANTEC	DATE: 06-11-08	FIG. NO: 3-19
	PM: AL	PROJ. NO: 27657102.00300	

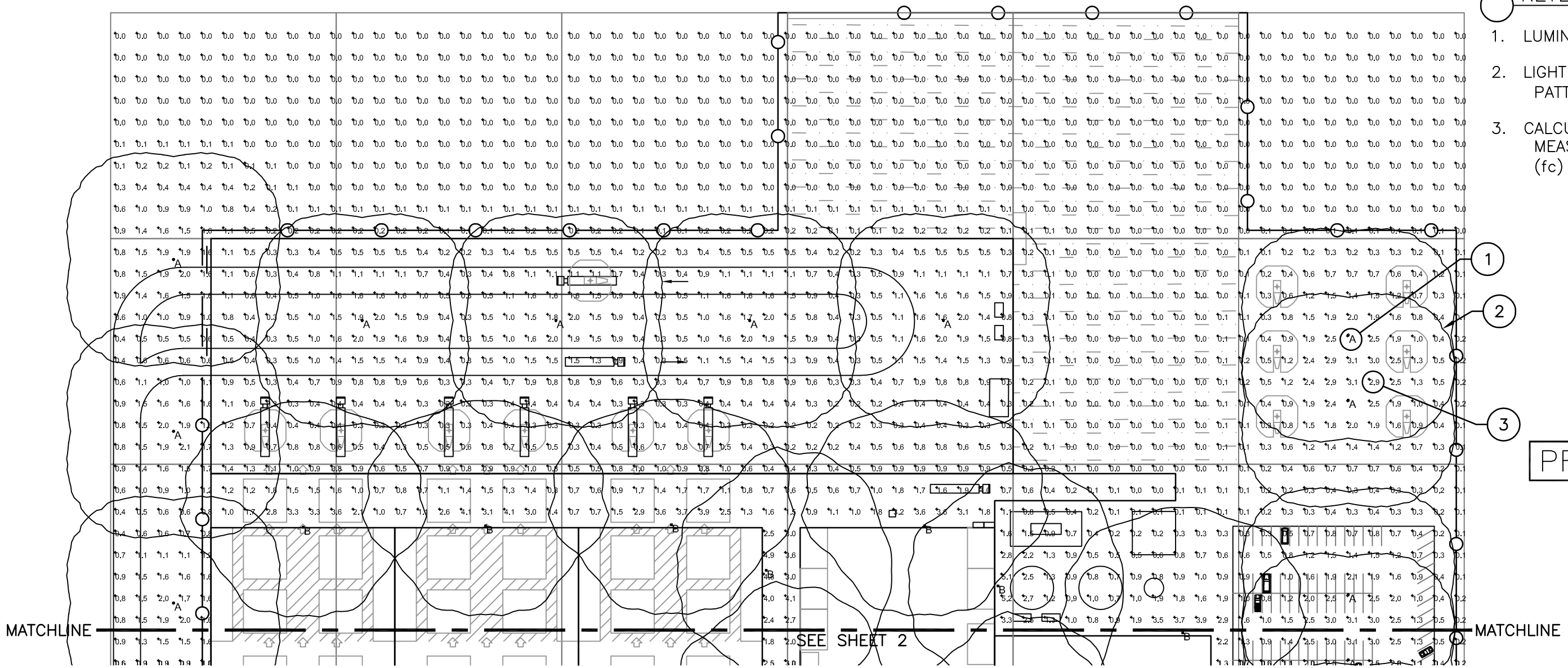

KEYED NOTES

1. LUMINAIRE TYPE (TYPICAL).
2. LIGHT FIXTURE DISTRIBUTION PATTERN (TYPICAL).
3. CALCULATED LIGHT LEVEL MEASURED IN FOOTCANDLES (fc) (TYPICAL).

PRELIMINARY

LUMINAIRE SCHEDULE

Symbol	Label	Qty	Catalog Number	Description	Lamp	File	Lumens	LLF	Watts
○	A	50	KVF 400S SYMFL/SSS27.5	SQUARE AREA LIGHT, SYMMETRIC DISTRIBUTION, FLAT LENS.	ONE 400-WATT CLEAR ED-18 HIGH PRESSURE SODIUM, VERTICAL BASE UP POSITION.	ltl9438.IES	50000	0.81	468
□	B	13	KSF2 400S R4W WM	ARM MOUNTED PREMIUM CUTOFF W/R4W REFL, CLEAR GLASS FLAT LENS.	ONE 400-WATT CLEAR ET-18 HIGH PRESSURE SODIUM, HORIZONTAL POSITION.	Ltl8506.IES	50000	0.81	468

STATISTICS

Description	Symbol	Avg	Max	Min	Max/Min	Avg/Min
ENTIRE SITE	+	0.8 fc	5.5 fc	0.0 fc	N / A	N / A

PRELIMINARY

NO.	DATE		BY	APP.
P1	04/23/07	ISSUED FOR PRELIMINARY REVIEW	PH	
P2	04/16/08	REVISED ADMIN. & MAINT. BUILDINGS FOR 750MW	PH	

STANTEC CONSULTING INC.
9400 S.W. BARNES ROAD
STE. 200
PORTLAND, OREGON, 97225
503.297.1631
STANTEC.COM

DRN. STC/GSP	DES. STC/PH	CHK. STC/	DATE 03/06/07
SCALE 1"=100'		APP.	DATE

MAIN SERVICES COMPLEX LIGHTING
SITE PLAN – PART A
SOLAR TWO PROJECT

URS

CREATED BY: STANTEC	DATE: 06-11-08	FIG. NO: 3-20
PM: AL	PROJ. NO: 27657102.00300	

P:\Sys4\2000026801-Solar2\Exhibits\S2-E-0100-01.dwg, 4/16/2008 12:49:18 PM, slee

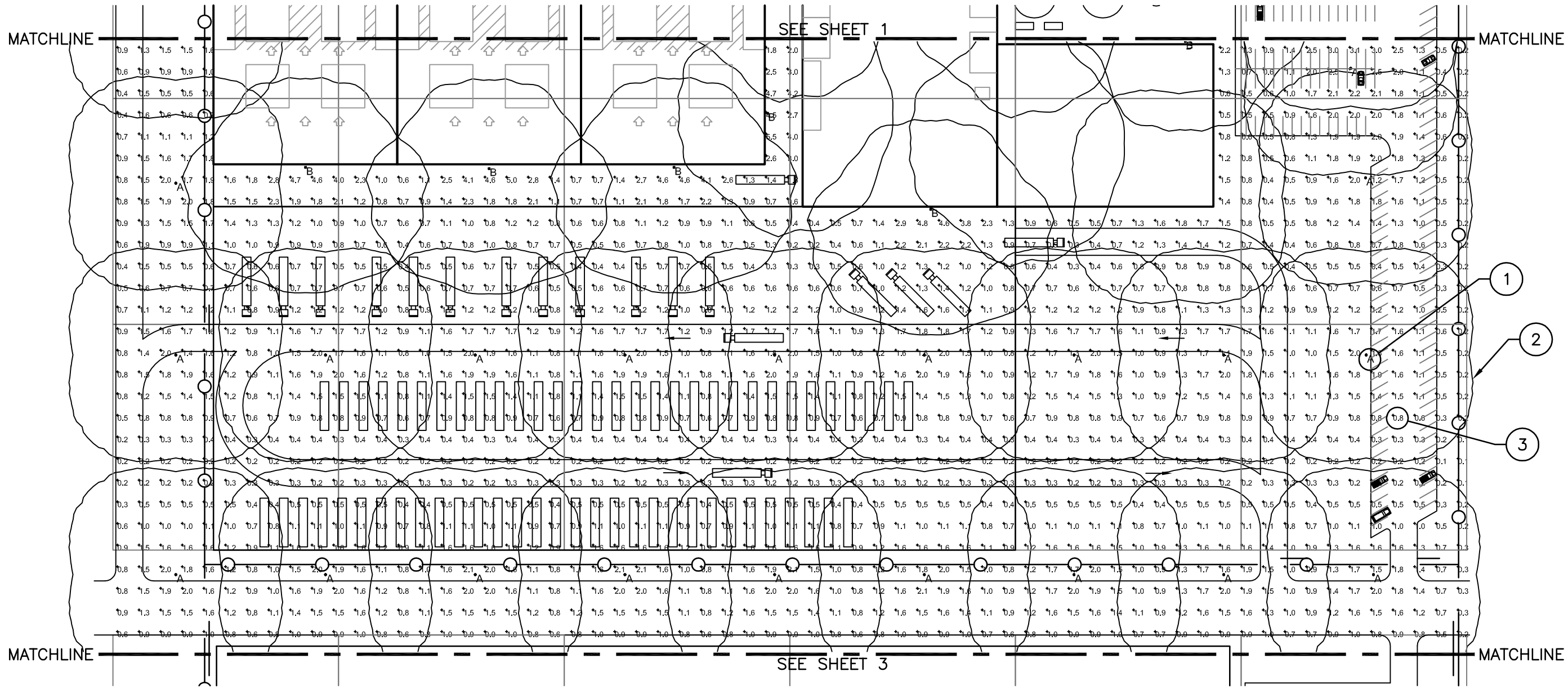

KEYED NOTES

1. LUMINAIRE TYPE (TYPICAL).
2. LIGHT FIXTURE DISTRIBUTION PATTERN (TYPICAL).
3. CALCULATED LIGHT LEVEL MEASURED IN FOOTCANDLES (fc) (TYPICAL).

PRELIMINARY

NO.	DATE		BY	APP.
P1	04/23/07	ISSUED FOR PRELIMINARY REVIEW	PH	
P2	04/16/08	REVISED ADMIN. & MAINT. BUILDINGS FOR 750MW	PH	

STANTEC CONSULTING INC.
9400 S.W. BARNES ROAD
STE. 200
PORTLAND, OREGON, 97225
503.297.1631
STANTEC.COM

DRN. STC/GSP	DES. STC/PH	CHK. STC/	DATE 03/06/07
SCALE 1"=100'		APP.	DATE

MAIN SERVICES COMPLEX LIGHTING
SITE PLAN – PART B
SOLAR TWO PROJECT

URS

CREATED BY: STANTEC	DATE: 06-11-08	FIG. NO:
PM: AL	PROJ. NO: 27657102.00300	3-21

P:\Sys4\2000026801-Solar2\Exhibits\S2-E-0100-02.dwg, 4/16/2008 12:50:11 PM, slee

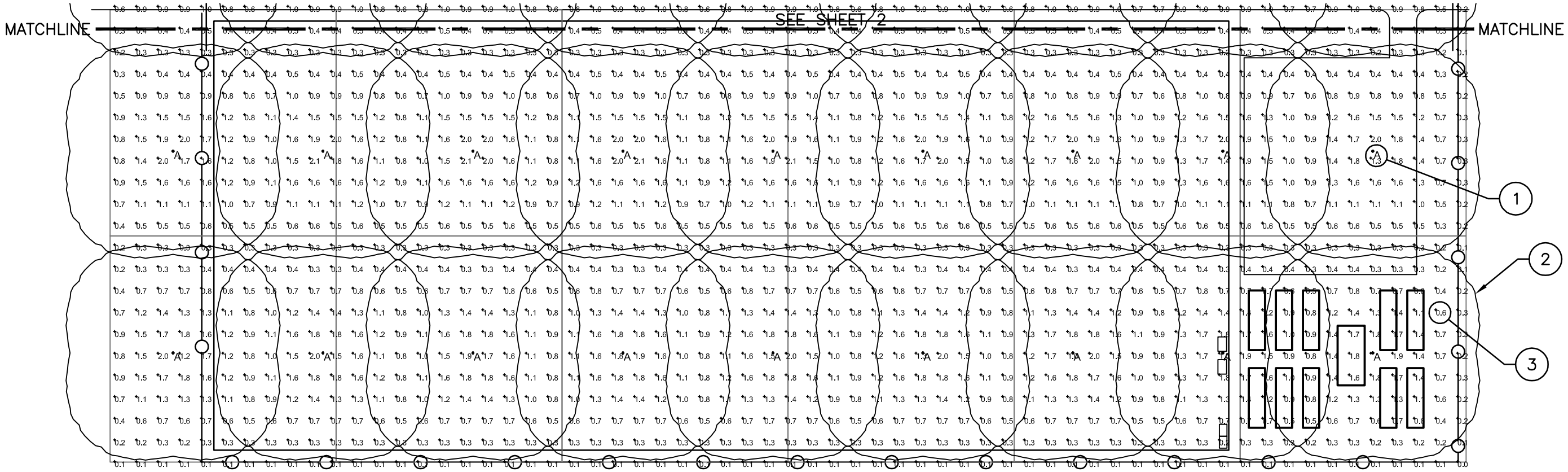

KEYED NOTES

1. LUMINAIRE TYPE (TYPICAL).
2. LIGHT FIXTURE DISTRIBUTION PATTERN (TYPICAL).
3. CALCULATED LIGHT LEVEL MEASURED IN FOOTCANDLES (fc) (TYPICAL).

PRELIMINARY

NO.	DATE		BY	APP.
P1	04/23/07	ISSUED FOR PRELIMINARY REVIEW	PH	
P2	04/16/08	REISSUED	PH	

STANTEC CONSULTING INC.
9400 S.W. BARNES ROAD
STE. 200
PORTLAND, OREGON, 97225
503.297.1631
STANTEC.COM

DRN. STC/GSP	DES. STC/PH	CHK. STC/	DATE 03/06/07
SCALE 1"=100'		APP.	DATE

MAIN SERVICES COMPLEX LIGHTING
SITE PLAN – PART C
SOLAR TWO PROJECT

URS

CREATED BY: STANTEC	DATE: 06-11-08	FIG. NO:
PM: AL	PROJ. NO: 27657102.00300	3-22

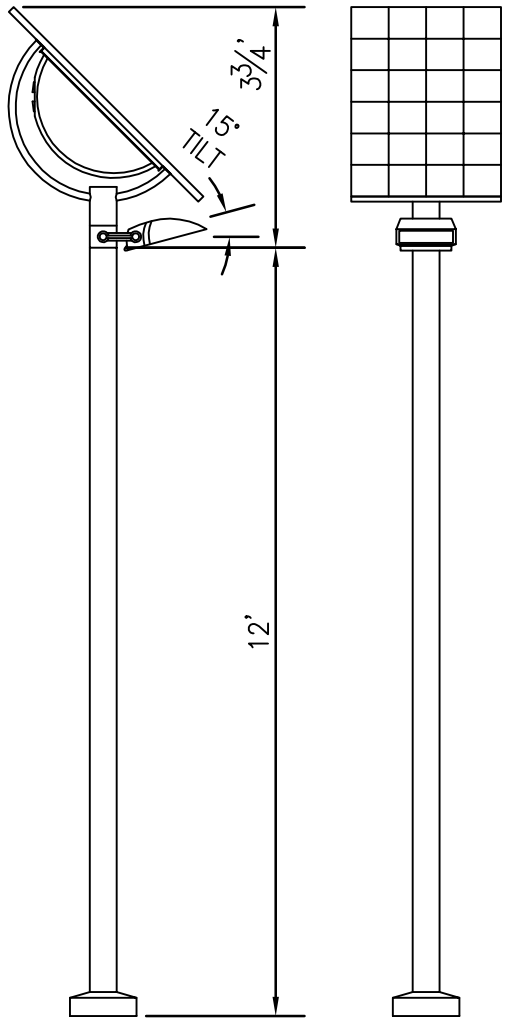

2A
–

TYPICAL SELF–POWERED LAMP
SE'LUX SONNELITER SERIES SDS2
SCALE: 1"=3'–0"

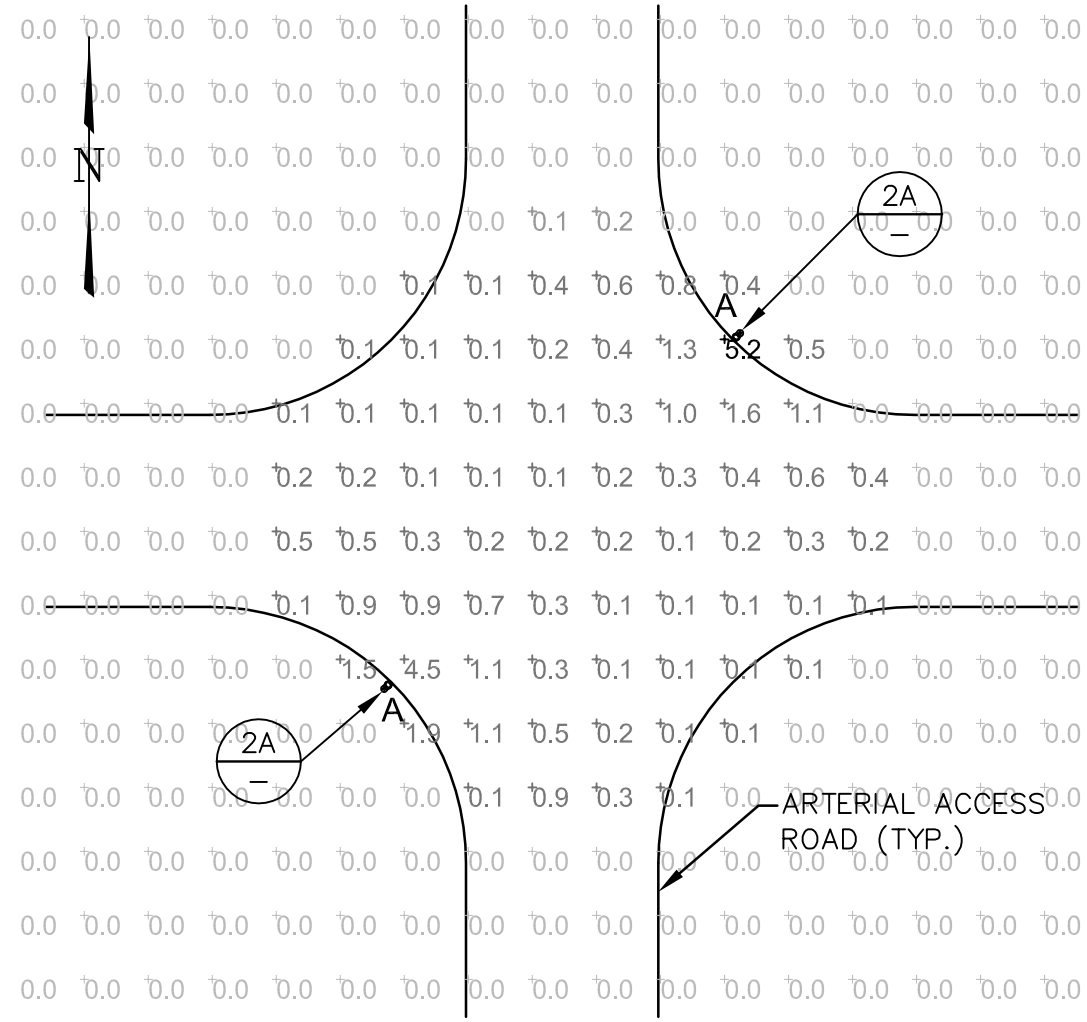

–
–

TYPICAL 4–WAY INTERSECTION LIGHTING
SCALE: 1"=30'

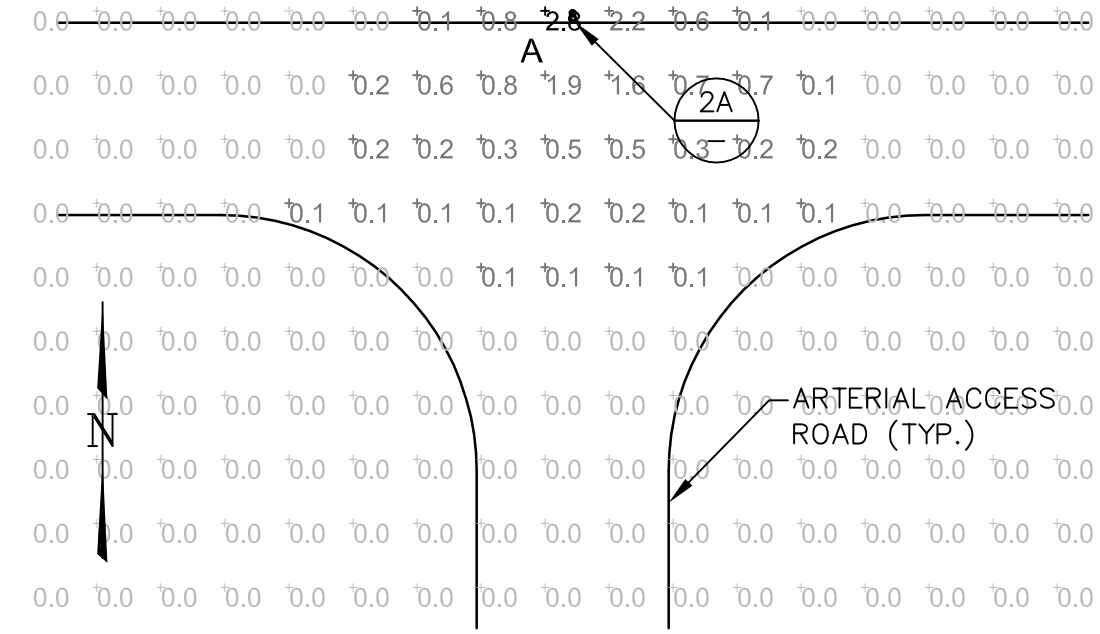

–
–

TYPICAL 3–WAY INTERSECTION LIGHTING
SCALE: 1"=30'

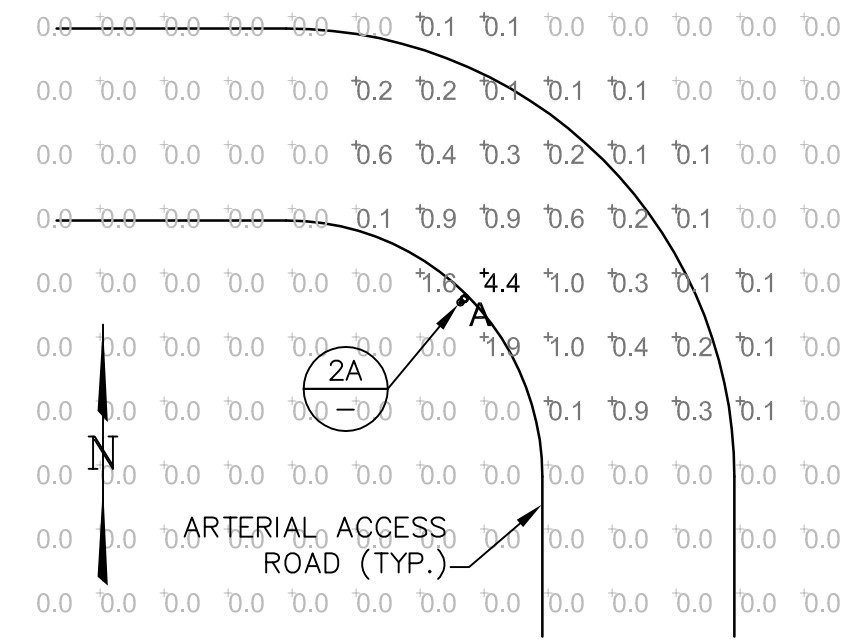

–
–

TYPICAL CURVE LIGHTING
SCALE: 1"=30'

PRELIMINARY

LUMINAIRE SCHEDULE

SYMBOL	LABEL	QTY	CATALOG NUMBER	DESCRIPTION	LAMP	FILE	LUMENS	LLF	WATTS
	A	4	SDS2 9T H035T6 (SonneLITER)	CAST ALUMINUM FIXTURE SEGMENTED REFLECTOR.	TESTED WITH ONE 70–WATT T6 CERAMIC METAL HALIDE, G12 BASE, RATED 6600 INITIAL LUMENS EACH.	SDS2–9T–H035T6.IES	3400	1.00	88

FIGURE 3.4–28

NO.	DATE		BY	APP.
P1	04/23/07	ISSUED FOR PRELIMINARY REVIEW	PH	

STANTEC CONSULTING INC.
9400 S.W. BARNES ROAD
STE. 200
PORTLAND, OREGON, 97225
503.297.1631
STANTEC.COM

DRN. STC/GSP	DES. STC/PH	CHK. STC/	DATE 04/02/07
SCALE NONE		APP.	DATE

TYPICAL ROADWAY LIGHTING AND PHOTOMETRIC DETAILS SOLAR TWO PROJECT

URS

CREATED BY: STANTEC	DATE: 06-11-08	FIG. NO: 3-23
PM: AL	PROJ. NO: 27657102.00300	

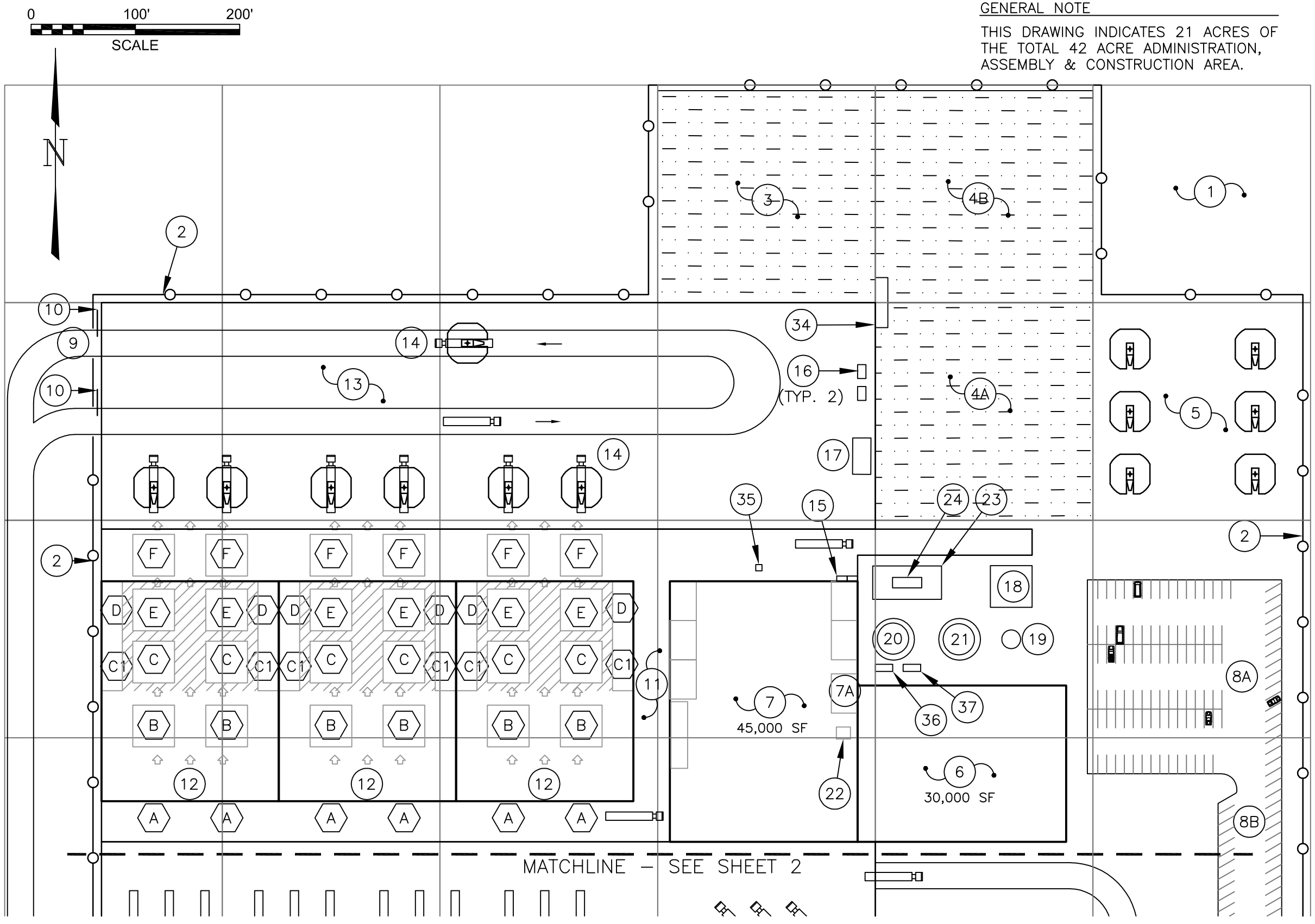

GENERAL NOTE

THIS DRAWING INDICATES 21 ACRES OF THE TOTAL 42 ACRE ADMINISTRATION, ASSEMBLY & CONSTRUCTION AREA.

KEYED NOTES

1. 1 ACRE SECTION (TYP. FOR ALL)
2. PERIMETER FENCE
3. 1 ACRE RETENTION PONDS
4A. 1 ACRE CONCRETE LINED EVAPORATION POND
4B. 1 ACRE CONCRETE LINED EVAPORATION POND
5. CSP DISH DISPLAY/VISITOR AREA
6. ADMINISTRATION BLDG. (200'Wx150'L)
7. 44' TALL MAINTENANCE BLDG. (180'Wx250'L)
7A. CHEMICAL STORAGE AREA
8A. EMPLOYEE PARKING LOT, PAVED (185'Wx185'L)
8B. EMPLOYEE PARKING LOT, PAVED (60'Wx340'L)
9. ON–SITE ROAD, PAVED
10. ACCESS GATE
11. CSP DISH ASSEMBLY BAY, CONCRETE PAD (300'Wx725'L)
12. ASSEMBLY BUILDING 170'Wx211'Lx77'–7"H (TYP. OF 3)
13. PAVED AREA FOR ASSEMBLED DISH TRANSPORT & MAINTENANCE/DISH WASHING VEHICLES (620'Wx220'L)
14. TRUCK CAB W/ TRAILER OR FLAT BED (TYP. FOR ALL)
15. (2) 8 CU. YD. DUMPSTERS
16. 5000 GALLON FUEL STORAGE (W/ CONTAINMENT) FOR ON–SITE VEHICLES (8' DIAx13'–4"L)
17. STORAGE AREA FOR 100 HYDROGEN BOTTLES (15'Wx75'L)
18. 40'Wx40'L WATER TREATMENT AREA WITH PROT. ROOF.
19. POTABLE WATER TANK FED BY 2" WATER LINE (18' DIAx10' TALL)
20. FIRE PROTECTION/MIRROR WASHING WATER TANK (40' DIAx20' TALL)
21. RAW WATER TANK (40' DIAx20' TALL)
22. 150 GALLON LUBRICATING OIL RECYCLING TANK.
23. ALTERNATE 1: ABOVE GROUND 10,000 GALLON/DAY CAPACITY WASTE WATER TREATMENT FACILTY (66'–0"L x 32'–0"W)
24. ALTERNATE 2: BELOW GROUND 10,000 GALLON SEWAGE HOLDING TANK (20'L x 10'W x 8'H)
34. BACKHOE ACCESS RAMP
35. ELECTRIC SERVICE TRANSFORMER
36. DIESEL FIRE PUMP
37. DIESEL STANDBY ELECTRIC GENERATOR

CSP DISH ASSEMBLY PATH

A. PARTS STORAGE AREA
B. STRUCTURE ASSEMBLY AREA
C. MIRROR ASSEMBLY AREA
C1. MIRROR ASSEMBLY STAGING AREA
D. TESTING AREA
E. CALIBRATION AREA
F. COMPLETED ASSEMBLY TRANSPORT AREA

PRELIMINARY

NO.	DATE		BY	APP.
P1	04/23/07	ISSUED FOR PRELIMINARY REVIEW	PH	
P2	07/17/07	ADDED NORTH ARROW, SCALE	PH	
P3	04/08/08	REVISED ADMIN. & MAINT. BUILDINGS FOR 600MW;		
		REMOVED WEATHER STATION/NIP TRACKER	PH	
P4	04/16/08	REISSUED MAINT. BUILDING FOR 750MW	PH	

STANTEC CONSULTING INC.
9400 S.W. BARNES ROAD
STE. 200
PORTLAND, OREGON, 97225
503.297.1631
STANTEC.COM

DRN. STC/GSP	DES. STC/PH	CHK. STC/	DATE 03/06/07
SCALE 1"=100'		APP.	DATE

MAIN SERVICES COMPLEX
SITE PLAN – PART A
SOLAR TWO PROJECT

URS

CREATED BY: STANTEC	DATE: 06-11-08	FIG. NO: 3-24
PM: AL	PROJ. NO: 27657102.00300	

P:\Sys4\2000026801-Solar2\Exhibits\S2-G-0100-01.dwg, 4/16/2008 12:44:37 PM, slee

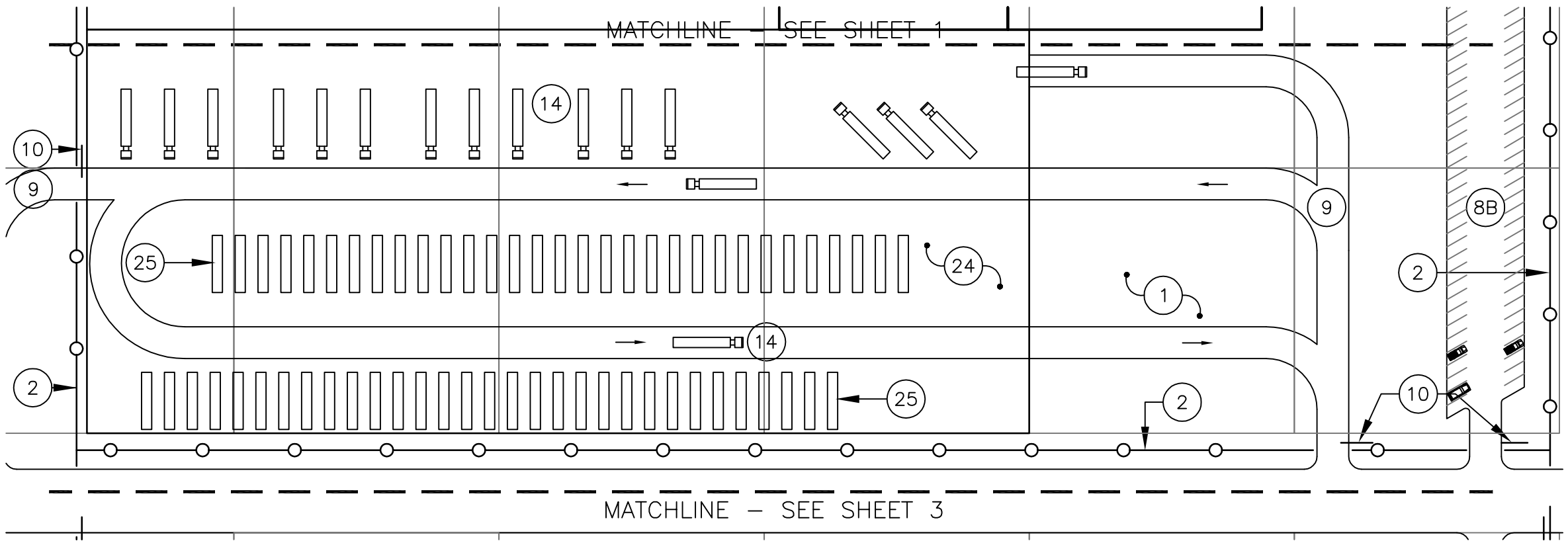

GENERAL NOTE

THIS DRAWING INDICATES 7 ACRES OF THE TOTAL 42 ACRE ADMINISTRATION, ASSEMBLY & CONSTRUCTION AREA.

KEYED NOTES

1. 1 ACRE SECTION (TYP. FOR ALL)
2. PERIMETER FENCE
8B. EMPLOYEE PARKING LOT, PAVED (60'Wx340'L)
9. ON–SITE ROAD, PAVED
10. ACCESS GATE
14. TRUCK CAB W/ TRAILER OR FLAT BED (TYP. FOR ALL)
24. PAVED AREA FOR DISH SUB–ASSEMBLY & COMPONENT DROP OFF AND OPERATIONS & MAINTENANCE SUPPLIES
25. ASSEMBLY PARTS TRAILER STORAGE AREA
26. SITE ARTERIAL ROAD

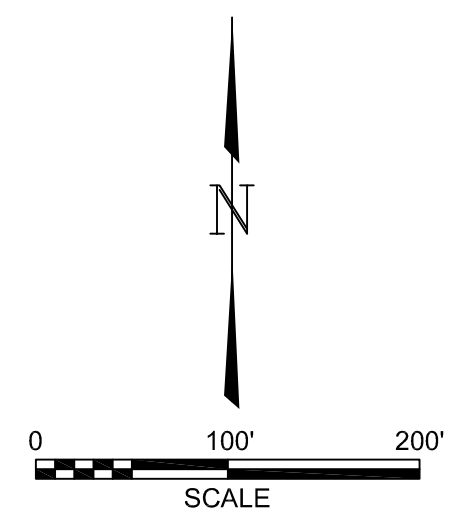

PRELIMINARY

NO.	DATE		BY	APP.
P1	04/23/07	ISSUED FOR PRELIMINARY REVIEW	PH	
P2	07/17/07	ADDED NORTH ARROW, SCALE	PH	
P3	04/16/08	REISSUED	PH	

STANTEC CONSULTING INC.
9400 S.W. BARNES ROAD
STE. 200
PORTLAND, OREGON, 97225
503.297.1631
STANTEC.COM

DRN. STC/GSP	DES. STC/PH	CHK. STC/	DATE 03/06/07
SCALE 1"=100'		APP.	DATE

MAIN SERVICES COMPLEX
SITE PLAN – PART B
SOLAR TWO PROJECT

URS

CREATED BY: STANTEC	DATE: 06-11-08	FIG. NO: 3-25
PM: AL	PROJ. NO: 27657102.00300	

P:\Sys4\2000026801-Solar2\Exhlblts\S2-G-0100-02.dwg, 4/16/2008 11:43:28 AM, slee

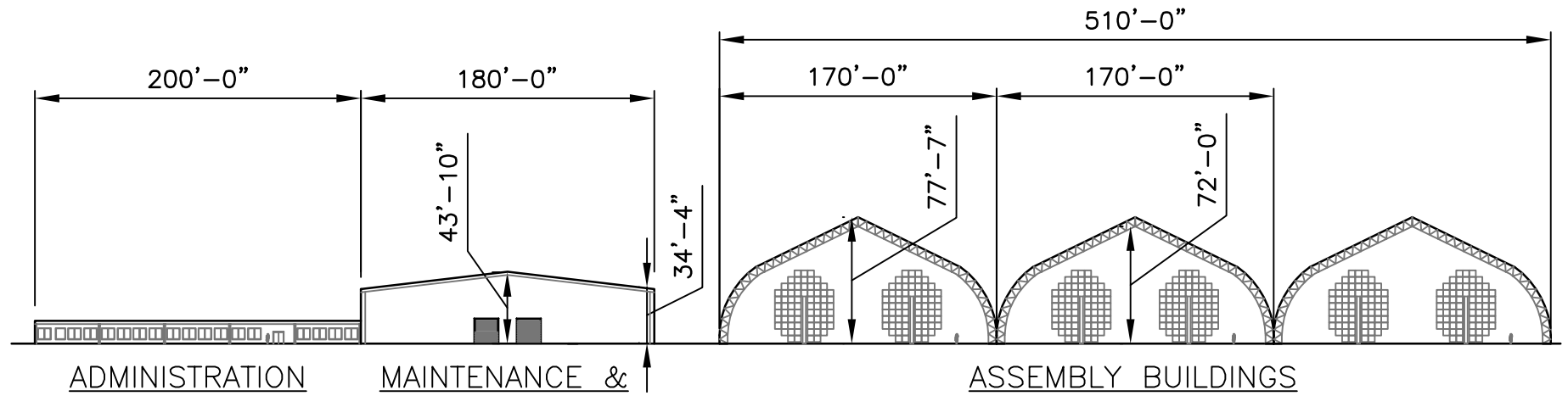

1 — NORTH ELEVATION
SCALE: 1"=100'–0"

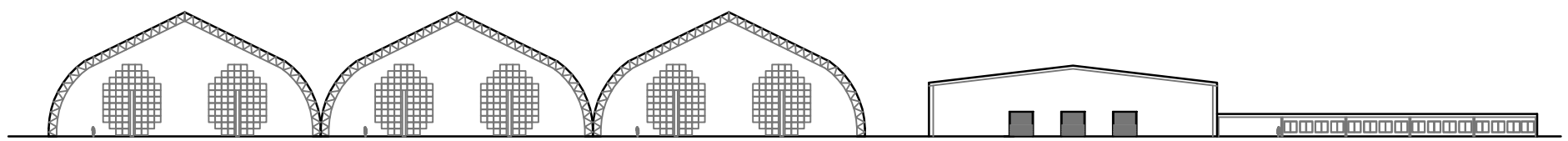

2 — SOUTH ELEVATION
SCALE: 1"=100'–0"

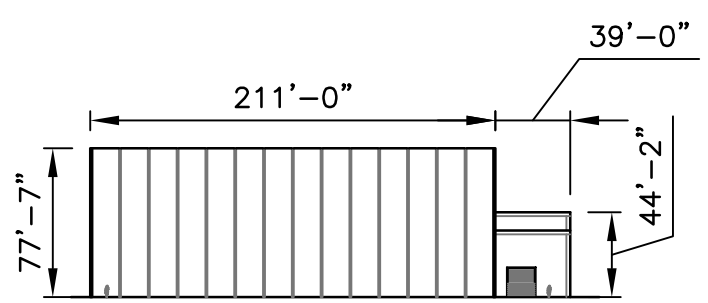

3 — WEST ELEVATION
SCALE: 1"=100'–0"

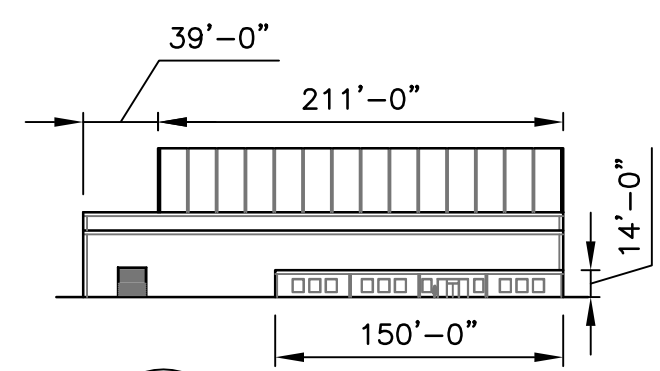

4 — EAST ELEVATION
SCALE: 1"=100'–0"

PRELIMINARY

NO.	DATE		BY	APP.
P1	04/23/07	ISSUED FOR PRELIMINARY REVIEW	PH	
P2	04/08/08	REVISED ADMIN. & MAINT. BUILDINGS FOR 600MW	PH	
P3	04/16/08	REVISED MAINT. BUILDING FOR 750MW	PH	

STANTEC CONSULTING INC.
9400 S.W. BARNES ROAD
STE. 200
PORTLAND, OREGON, 97225
503.297.1631
STANTEC.COM

DRN. STC/GSP	DES. STC/PH	CHK. STC/	DATE 01/23/07
SCALE 1"=100'		APP.	DATE

MAIN SERVICES COMPLEX
ELEVATION VIEW
SOLAR TWO PROJECT

URS

CREATED BY: STANTEC	DATE: 06-11-08	FIG. NO: 3-26
PM: AL	PROJ. NO: 27657102.00300	

P:\Sys4\2000026801-Solar2\Exhibits\S2-G-0100-04.dwg, 4/16/2008 12:45:27 PM, slee

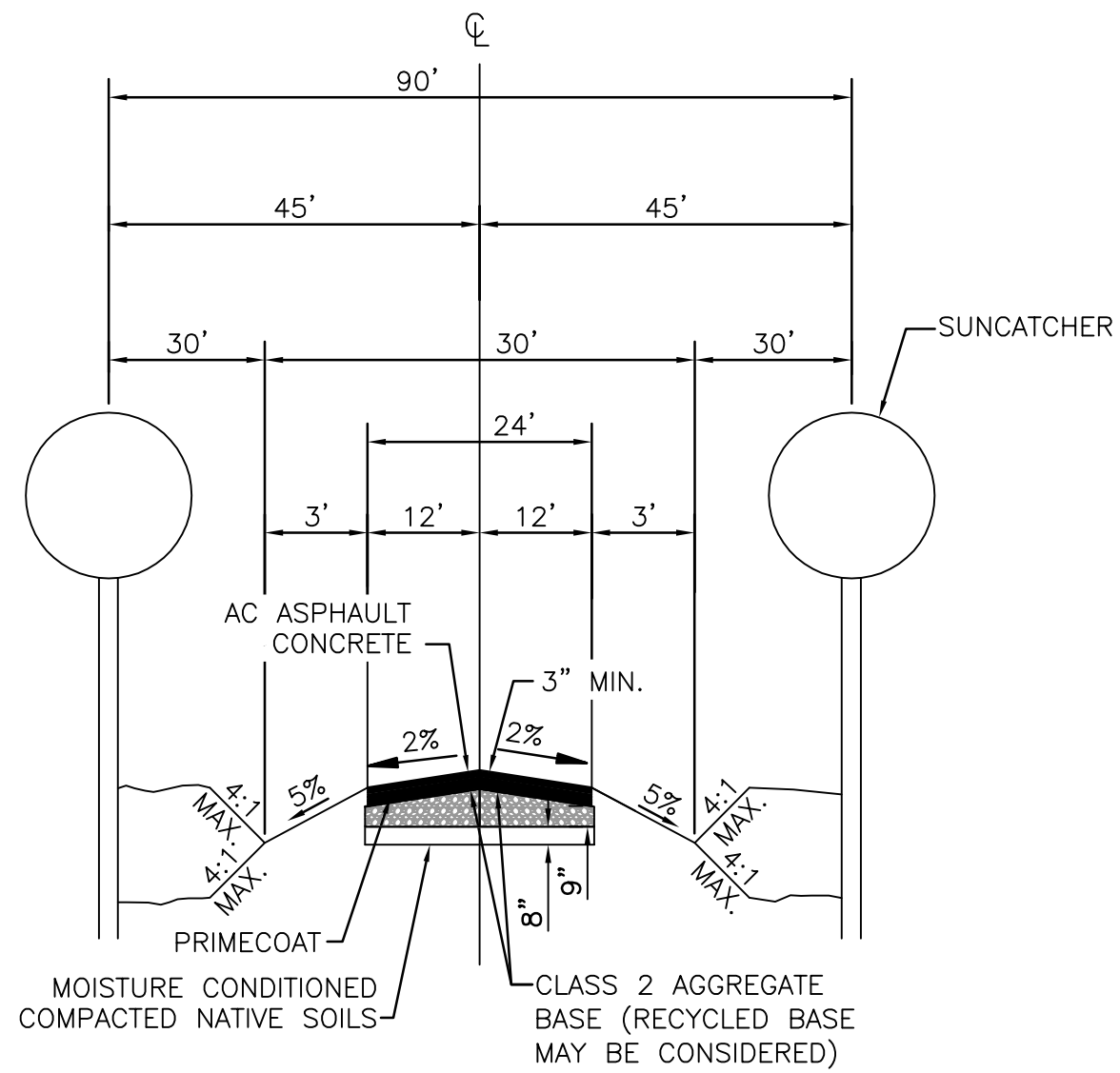

ARTERIAL ROADS (TYPICAL)

(N.T.S.)

NOTE

THIS SECTION IS BASED ON IMPERIAL COUNTY PUBLIC WORKS DEPARTMENT (EL CENTRO) DWG. NO. COUNTY 430. WITH STRUCTURAL SECTION BASED ON DWG. NO. COUNTY–440.

PRELIMINARY

NO.	DATE		BY	APP.
P1	04/23/07	ISSUED FOR PRELIMINARY REVIEW	PH	
P2	04/16/08	RE–ISSUED FOR REVIEW	PH	

STANTEC CONSULTING INC.
9400 S.W. BARNES ROAD
STE. 200
PORTLAND, OREGON, 97225
503.297.1631
STANTEC.COM

DRN. STC/GSP	DES. STC/PH	CHK. STC/	DATE 01/23/07
SCALE NONE		APP.	DATE

PAVED ARTERIAL ROADS
SOLAR TWO PROJECT

URS

CREATED BY: STANTEC	DATE: 06-11-08	FIG. NO: 3-27
PM: AL	PROJ. NO: 27657102.00300	

P:\Sys4\2000026801-Solar2\Exhlblts\S2-C-0001-01.dwg, 4/16/2008 2:57:15 PM, slee

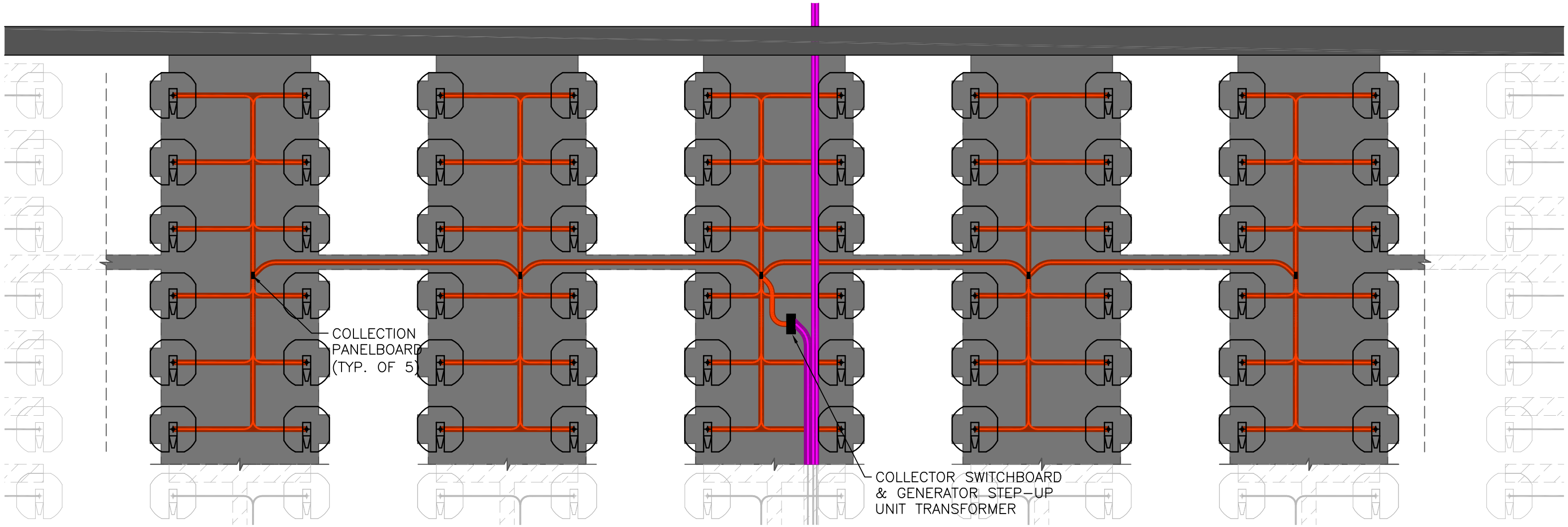

N

0 80' 160'
SCALE

LEGEND

- UNPAVED ACCESS ROUTE
- PAVED ROADWAYS
- SUNCATCHER UNIT
- 600V COLLECTOR CABLE WITH 4' BUFFER
- 34.5kV CABLE WITH 12' BUFFER

NOTES

1. THIS IS A REPRESENTATION OF A 1.5MW SOLAR GROUP. THE 1.5MW SOLAR GROUPS WILL BE ARRANGED TO FIT THE CONTOURS OF THE SITE.
2. ONE 1.5MW SOLAR GROUP IS COMPRISED OF SIXTY (60) SUNCATCHER UNITS CONNECTED INTO FIVE (5) TWELVE-UNIT GROUPS CONNECTED TO A 600V, 400A COLLECTION PANELBOARD.

PRELIMINARY

NO.	DATE		BY	APP.
P1	07/30/07	ISSUED FOR PRELIMINARY REVIEW	PH	
P2	02/27/08	RELOCATED ACCESS ROUTE	PH	
P3	04/16/08	RELOCATED ACCESS ROUTE	PH	

STANTEC CONSULTING INC.
9400 S.W. BARNES ROAD
STE. 200
PORTLAND, OREGON, 97225
503.297.1631
STANTEC.COM

DRN. STC/GSP	DES. STC/PH	CHK. STC/	DATE 07/30/07
SCALE 1"=80'-0"		APP.	DATE

1.5-MW SOLAR TWO CONSTRUCTION DISTURBANCE PLAN
SOLAR TWO PROJECT

URS

CREATED BY: STANTEC	DATE: 06-11-08	FIG. NO: 3-28
PM: AL	PROJ. NO: 27657102.00300	

P:\Sys4\2000026801-Solar2\Exhibits\S2-G-0005-01.dwg, 4/16/2008 11:48:17 AM, slee

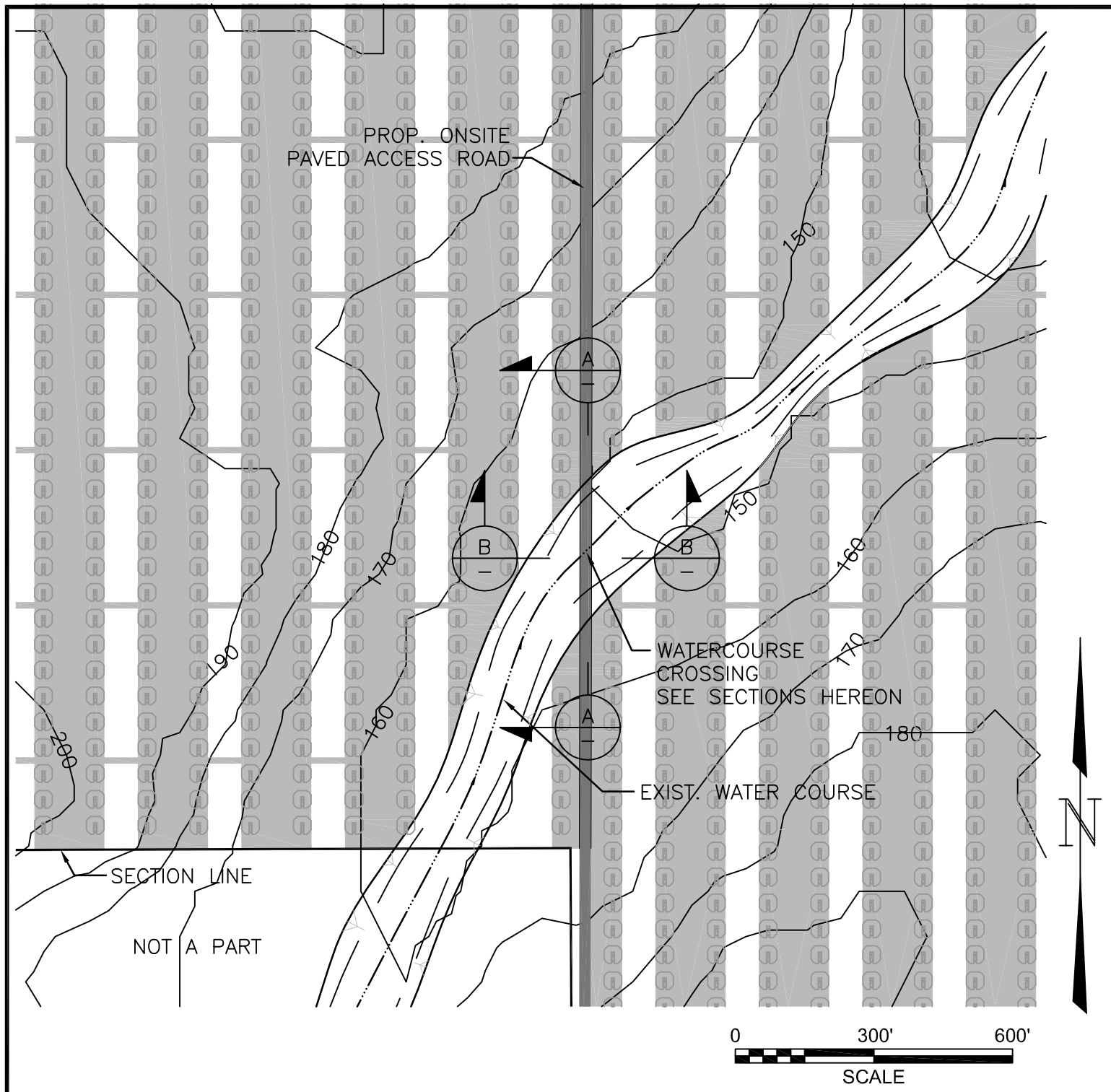

LEGEND

- BRUSH TRIMMING
- PAVED ROADWAYS
- SUNCATCHER UNIT
- EXIST. WATER COURSE

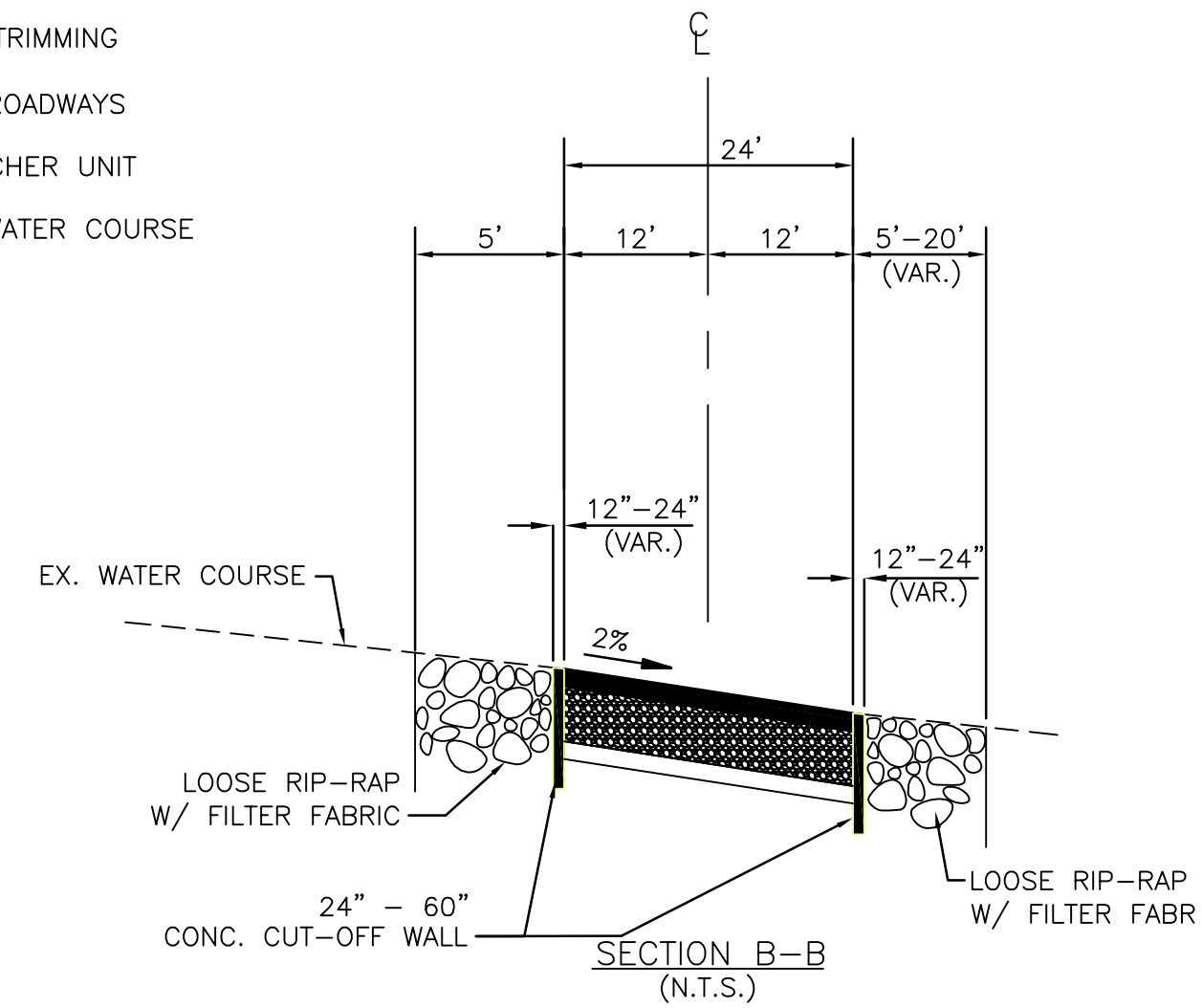

SECTION B–B
(N.T.S.)

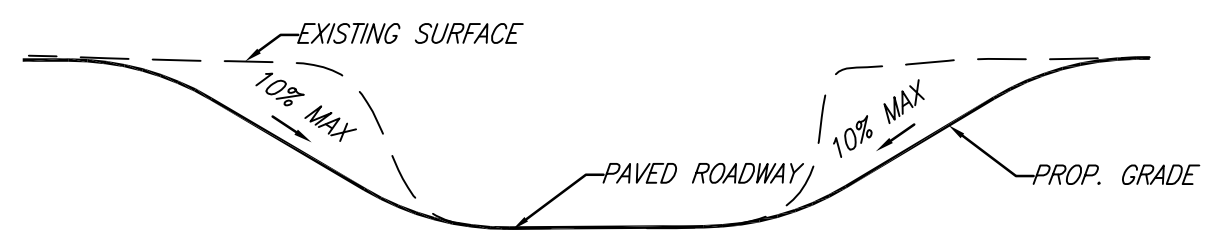

SECTION A–A
(N.T.S.)

PRELIMINARY

NO.	DATE		BY	APP.
P1	04/23/07	ISSUED FOR PRELIMINARY REVIEW	PH	
P2	07/30/07	CHANGED 'CLEARING' REFERENCE TO 'TRIMMING'	PH	
P3	04/16/08	RE–ISSUED FOR REVIEW	PH	

STANTEC CONSULTING INC.
9400 S.W. BARNES ROAD
STE. 200
PORTLAND, OREGON, 97225
503.297.1631
STANTEC.COM

DRN. STC/GSP	DES. STC/PH	CHK. STC/	DATE 01/23/07
SCALE NONE		APP.	DATE

ARIZONA CROSSING
SOLAR TWO PROJECT

URS

CREATED BY: STANTEC	DATE: 06-11-08	FIG. NO: 3-29
PM: AL	PROJ. NO: 27657102.00300	

P:\Sys4\2000026801-Solar2\Exhibits\S2-C-0016-01.dwg, 4/16/2008 2:56:05 PM, slee

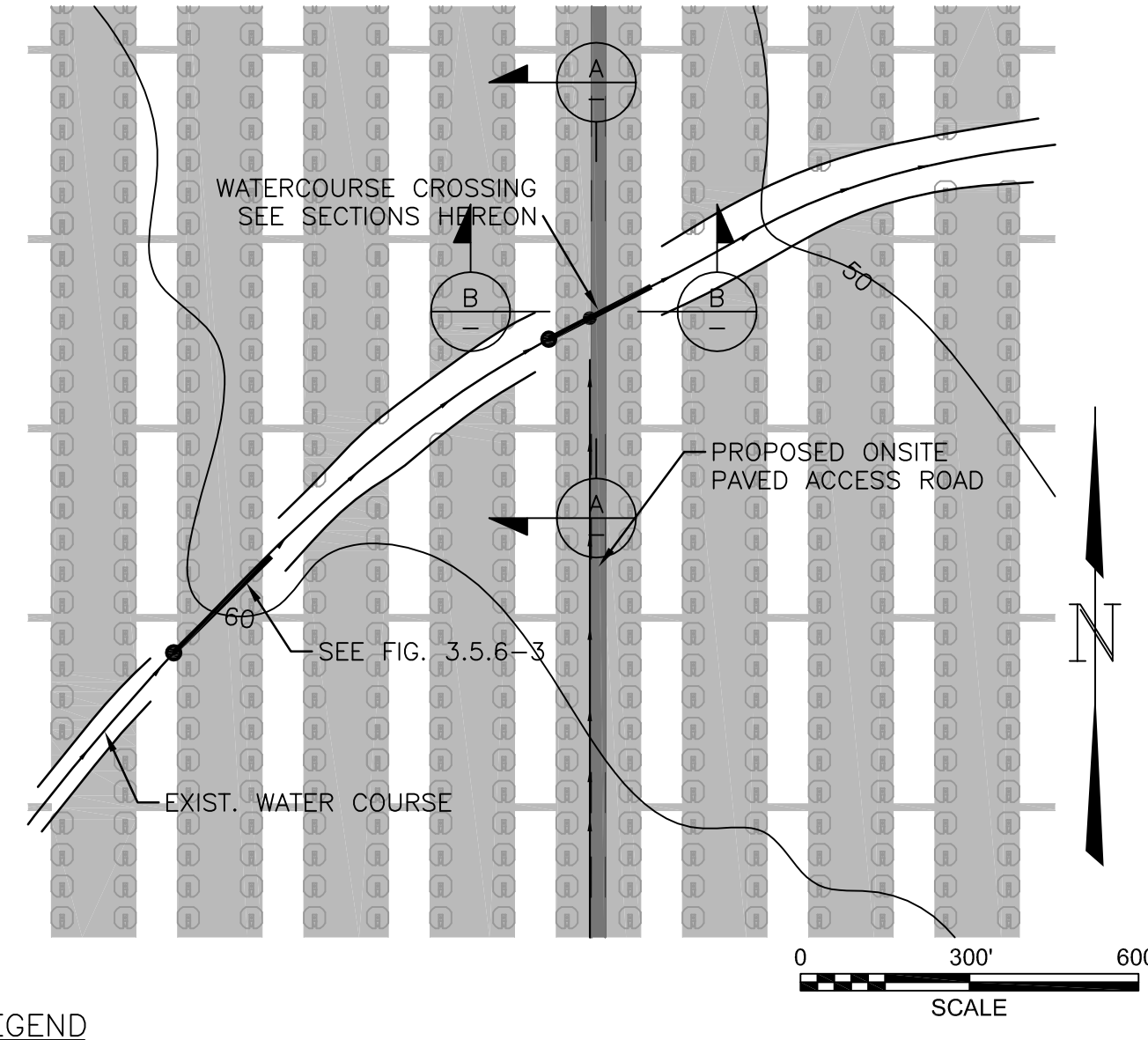

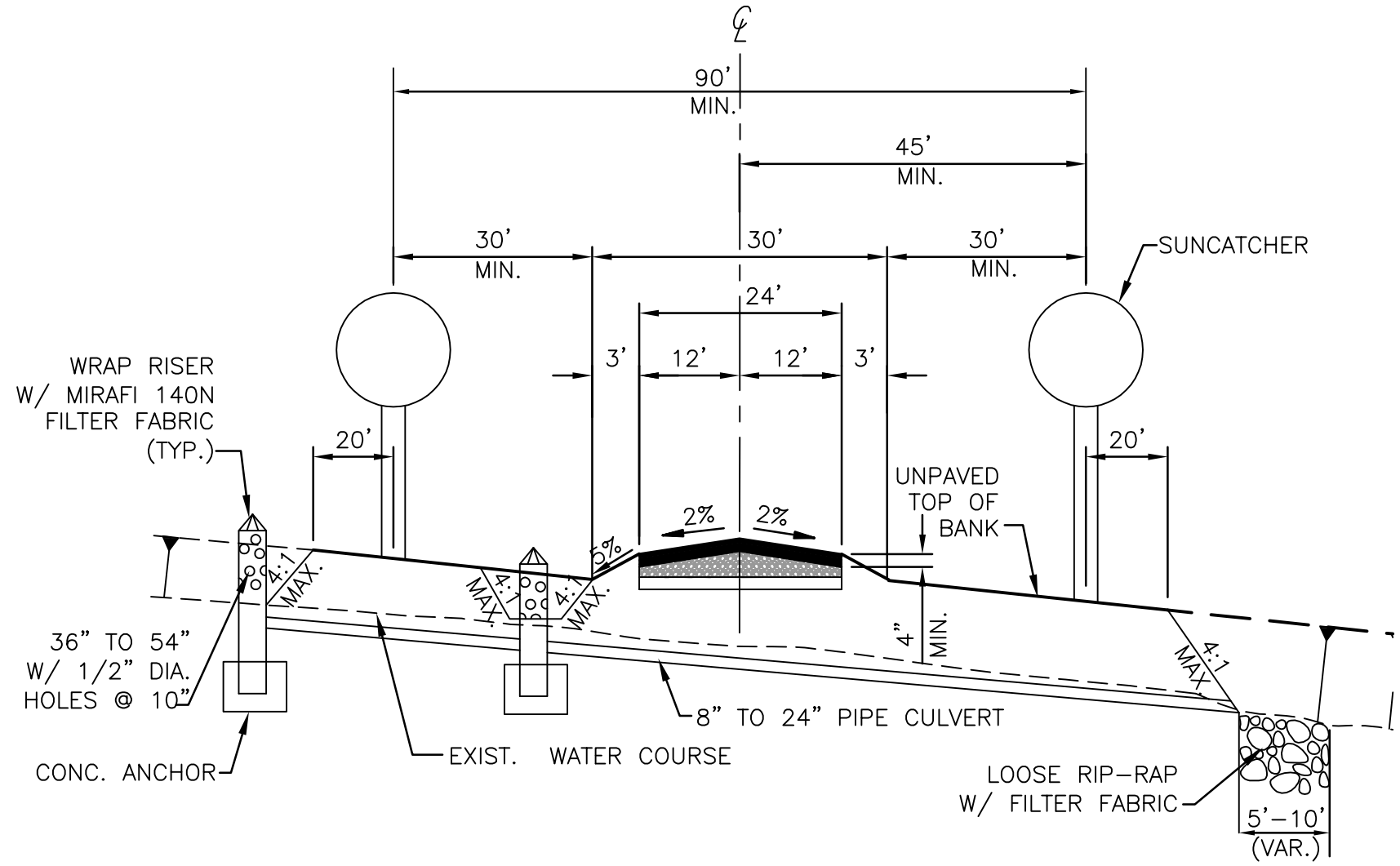

SECTION B–B
(N.T.S.)

LEGEND

- TRIMMING
- PAVED ROADWAYS (ASPHALT CEMENT)
- SUNCATCHER UNIT
- EXIST. WATER COURSE
- LOW FLOW CULVERT W/ RISER

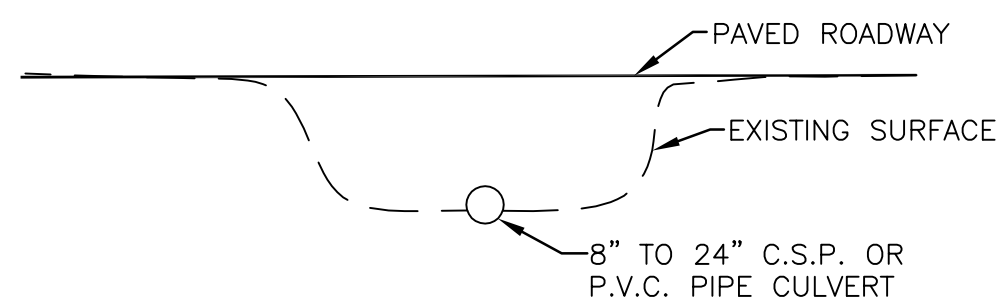

SECTION A–A
(N.T.S.)

PRELIMINARY

NO.	DATE		BY	APP.
P1	04/23/07	ISSUED FOR PRELIMINARY REVIEW	PH	
P2	07/30/07	CHANGED 'CLEARING' REFERENCE TO 'TRIMMING'	PH	
P3	04/16/08	RE-ISSUED FOR REVIEW	PH	

STANTEC CONSULTING INC.
9400 S.W. BARNES ROAD
STE. 200
PORTLAND, OREGON, 97225
503.297.1631
STANTEC.COM

DRN. STC/GSP	DES. STC/PH	CHK. STC/	DATE 01/23/07
SCALE NONE		APP.	DATE

LOW FLOW CULVERTS
SOLAR TWO PROJECT

URS

CREATED BY: STANTEC	DATE: 06-11-08	FIG. NO:
PM: AL	PROJ. NO: 27657102.00300	3-30

P:\Sys4\2000026801-Solar2\Exhibits\S2-C-0018-01.dwg, 4/16/2008 2:56:23 PM, slee

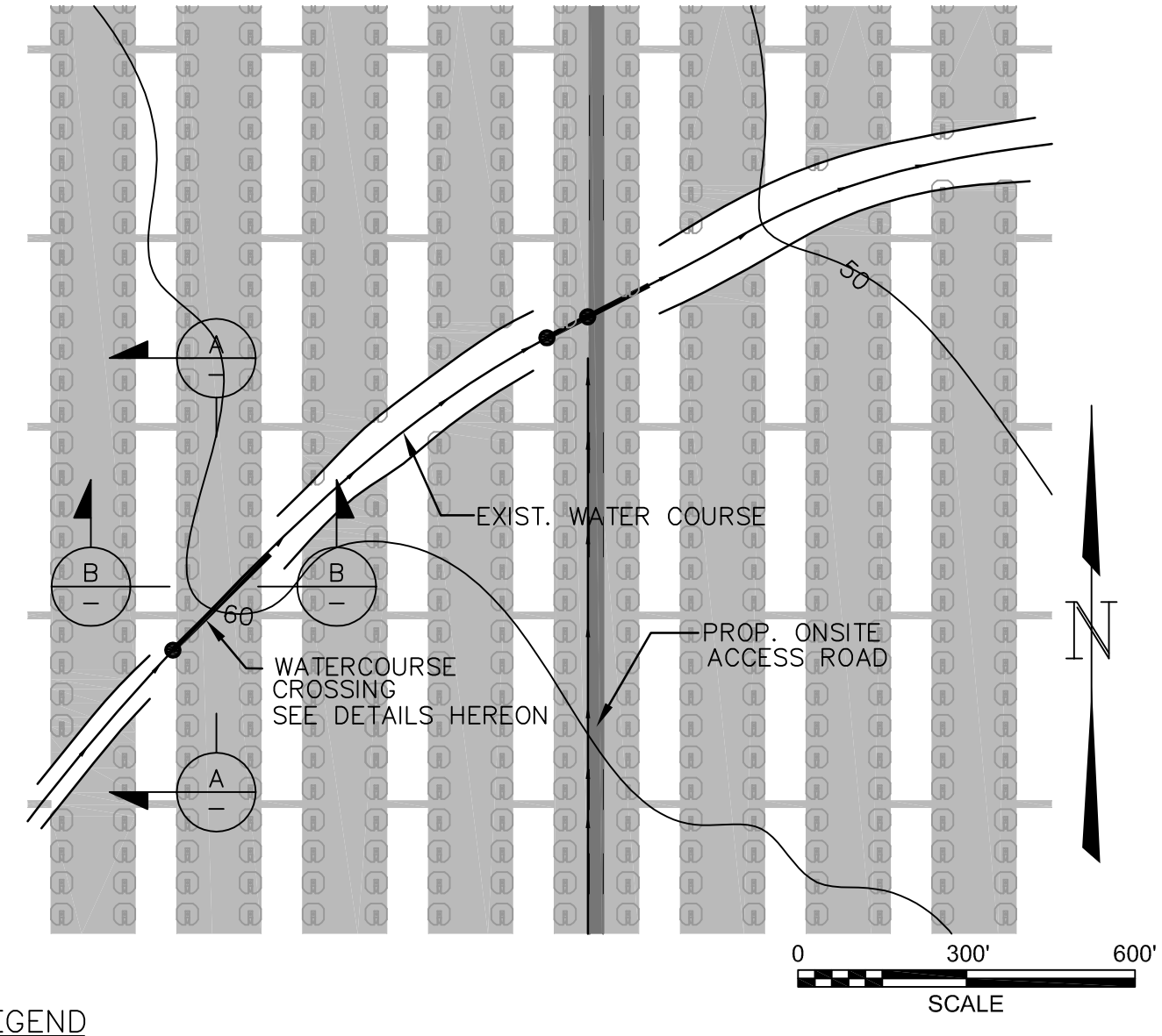

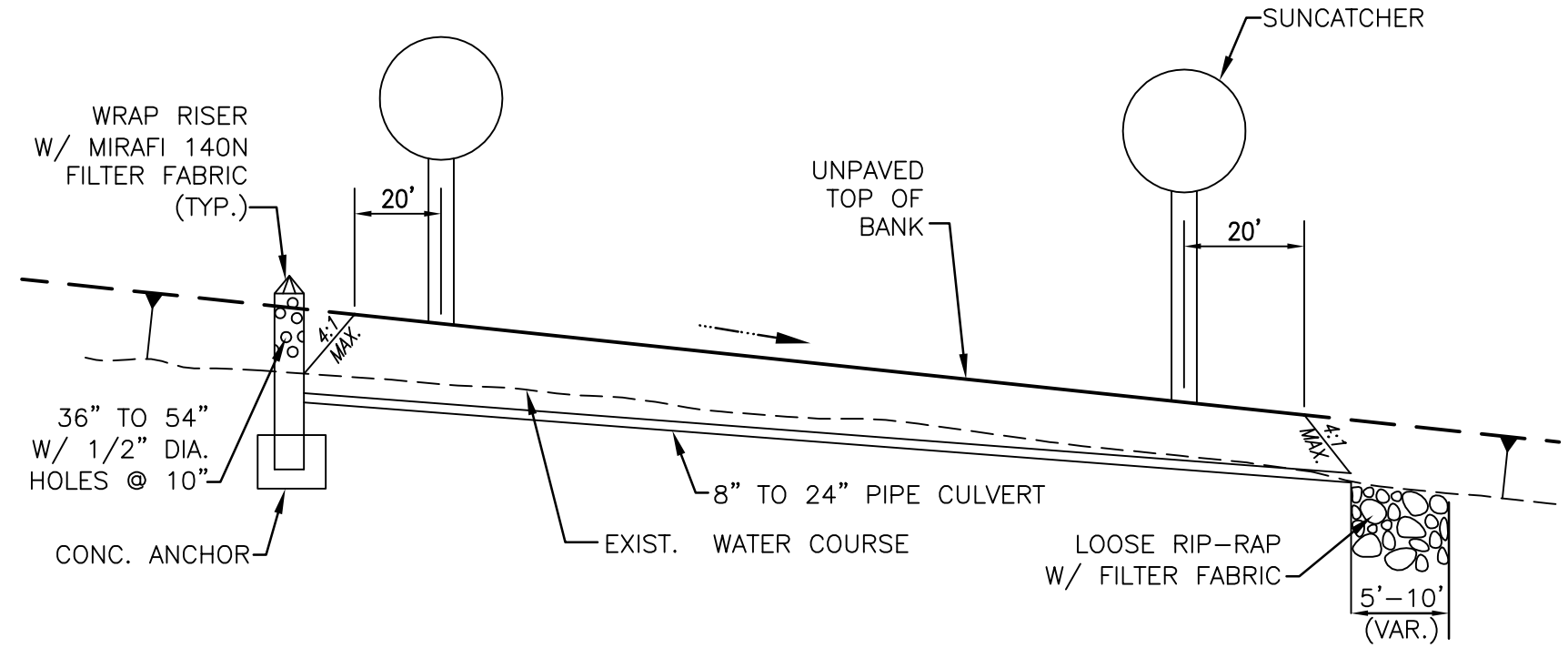

SECTION B–B
(N.T.S.)

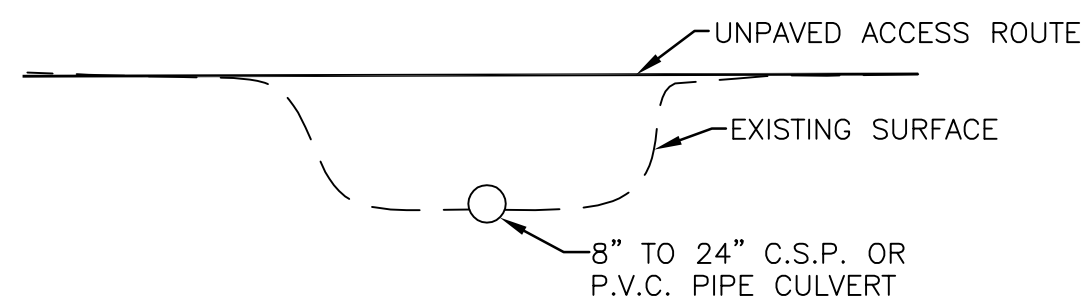

SECTION A–A
(N.T.S.)

LEGEND

- TRIMMING
- PAVED ROADWAYS (ASPHALT CEMENT)
- SUNCATCHER UNIT
- EXIST. WATER COURSE
- LOW FLOW CULVERT W/ RISER

PRELIMINARY

NO.	DATE		BY	APP.
P1	04/23/07	ISSUED FOR PRELIMINARY REVIEW	PH	
P2	07/30/07	CHANGED 'CLEARING' REFERENCE TO 'TRIMMING'	PH	
P3	04/16/08	RE–ISSUED FOR REVIEW	PH	

STANTEC CONSULTING INC.
9400 S.W. BARNES ROAD
STE. 200
PORTLAND, OREGON, 97225
503.297.1631
STANTEC.COM

DRN. STC/GSP	DES. STC/PH	CHK. STC/	DATE 01/23/07
SCALE NONE		APP.	DATE

LOW FLOW CULVERTS
UNDER SOLAR FIELD ACCESS ROUTES
SOLAR TWO PROJECT

URS

CREATED BY: STANTEC	DATE: 06-11-08	FIG. NO: 3-31
PM: AL	PROJ. NO: 27657102.00300	

P:\Sys4\2000026801-Solar2\Exhlblts\S2-C-0020-01.dwg, 4/16/2008 2:56:55 PM, slee

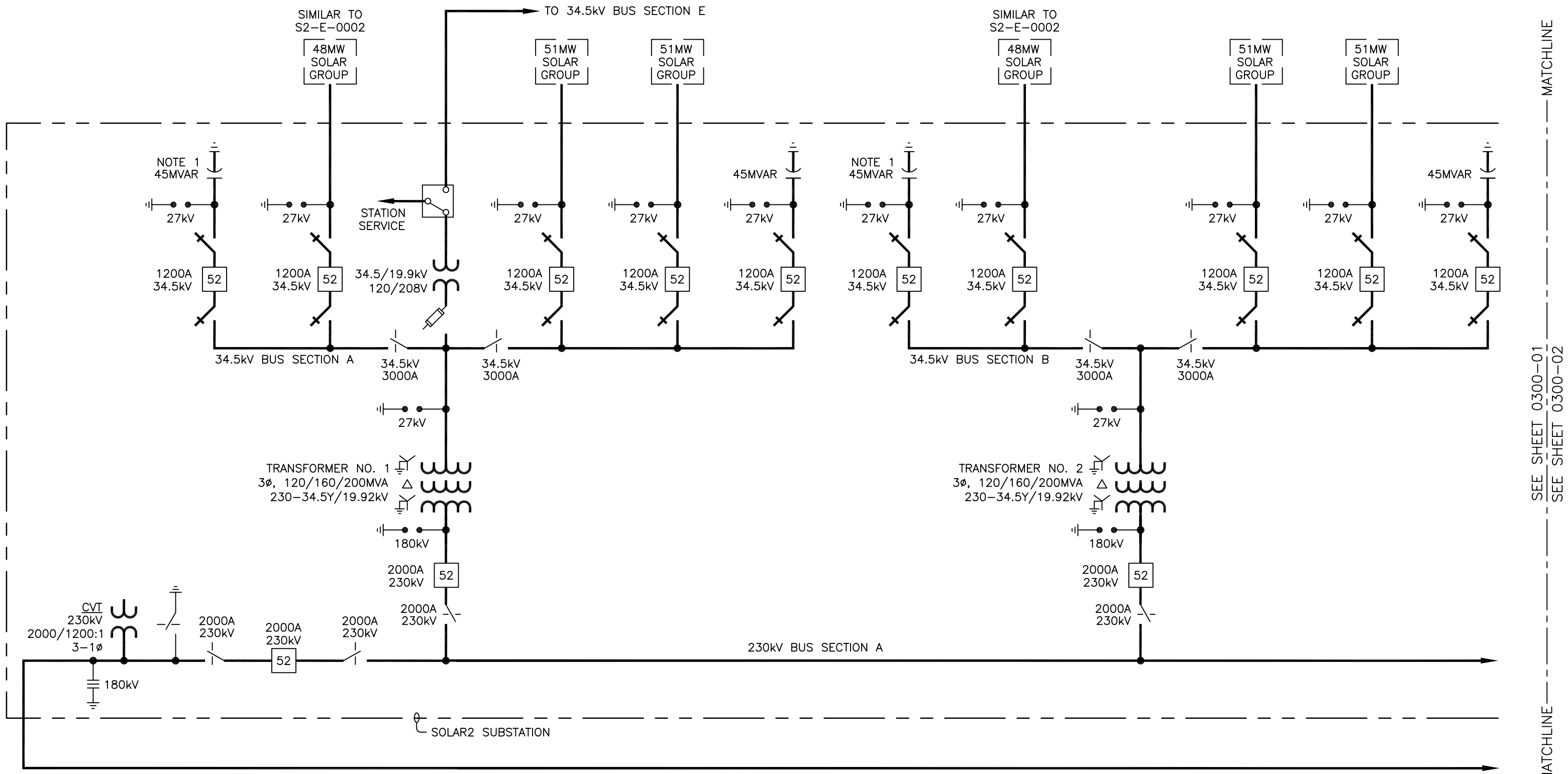

NOTE

1. CAP BANK SIZE AND NUMBER OF SWITCHED STEPS TO BE DETERMINED.

PRELIMINARY

NO.	DATE		BY	APP.
P1	04/23/07	ISSUED FOR PRELIMINARY REVIEW	PH	
P2	07/18/07	REVISED SDG&E CONNECTION, SOLAR GROUP LAYOUT	PH	
P3	04/16/08	CHANGED TO 750MW SUBSTATION DESIGN	PH	

STANTEC CONSULTING INC.
9400 S.W. BARNES ROAD
STE. 200
PORTLAND, OREGON, 97225
503.297.1631
STANTEC.COM

DRN. STC/GSP	DES. STC/PH	CHK. STC/	DATE 01/22/07
SCALE NONE		APP.	DATE

750-MW SOLAR TWO SUBSTATION
ONE-LINE DIAGRAM, SHEET 1
SOLAR TWO PROJECT

URS

CREATED BY: STANTEC	DATE: 06-11-08	FIG. NO: 3-32
PM: AL	PROJ. NO: 27657102.00300	

P:\Sys4\2000026801-Solar2\Exhibits\S2-E-0300-01.dwg, 4/16/2008 11:49:28 AM, slee

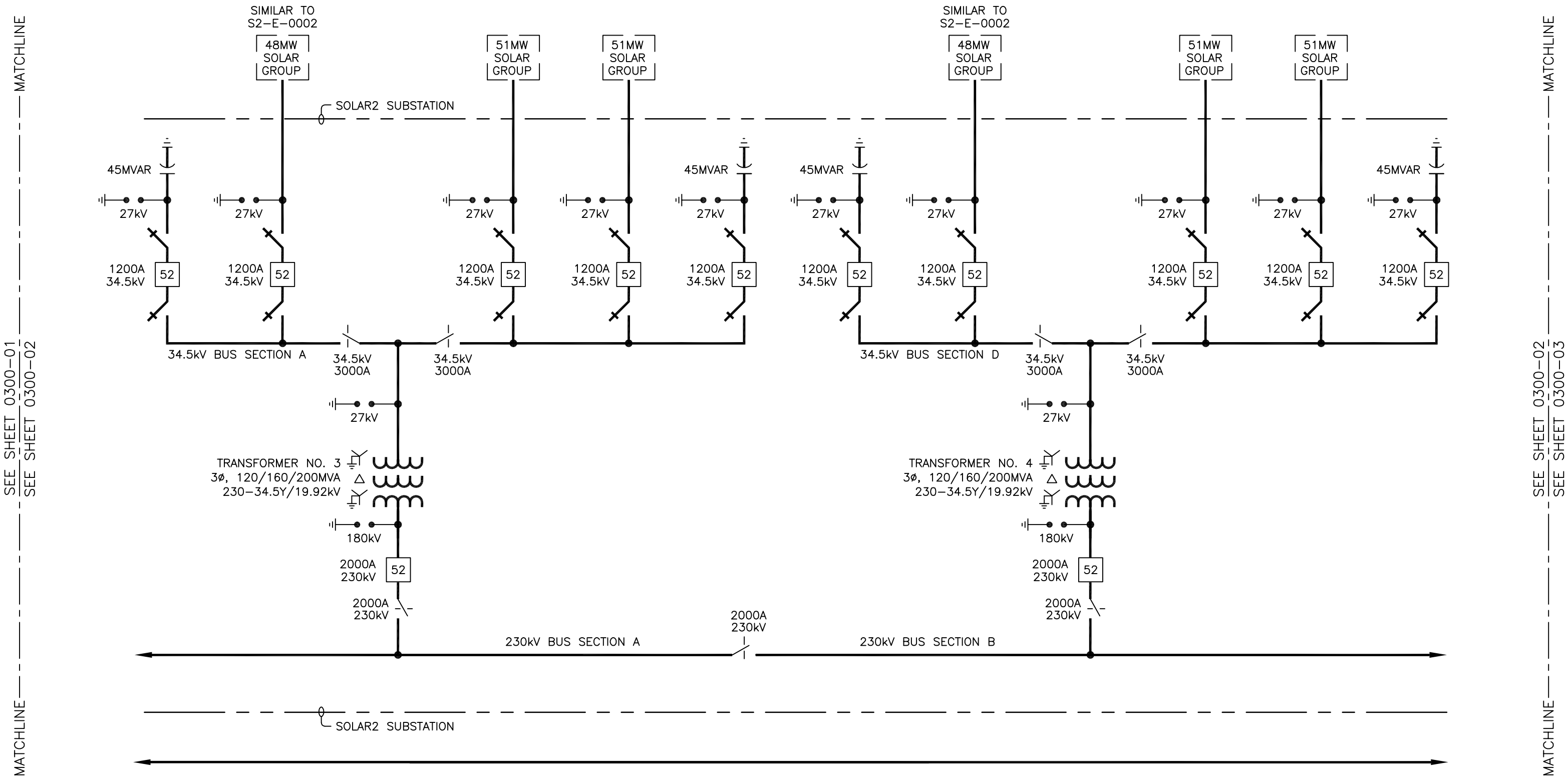

PRELIMINARY

NO.	DATE		BY	APP.
P1	04/23/07	ISSUED FOR PRELIMINARY REVIEW	PH	
P2	07/18/07	REVISED SDG&E CONNECTION, SOLAR GROUP LAYOUT	PH	
P3	04/16/08	CHANGED TO 750MW SUBSTATION DESIGN	PH	

STANTEC CONSULTING INC.
9400 S.W. BARNES ROAD
STE. 200
PORTLAND, OREGON, 97225
503.297.1631
STANTEC.COM

DRN. STC/GSP	DES. STC/PH	CHK. STC/	DATE 01/22/07
SCALE NONE		APP.	DATE

750-MW SOLAR TWO SUBSTATION
ONE-LINE DIAGRAM, SHEET 2
SOLAR TWO PROJECT

URS

CREATED BY: STANTEC	DATE: 06-11-08	FIG. NO:
PM: AL	PROJ. NO: 27657102.00300	3-33

P:\Sys4\2000026801-Solar2\Exhibits\S2-E-0300-02.dwg, 4/16/2008 1:06:20 PM, slee

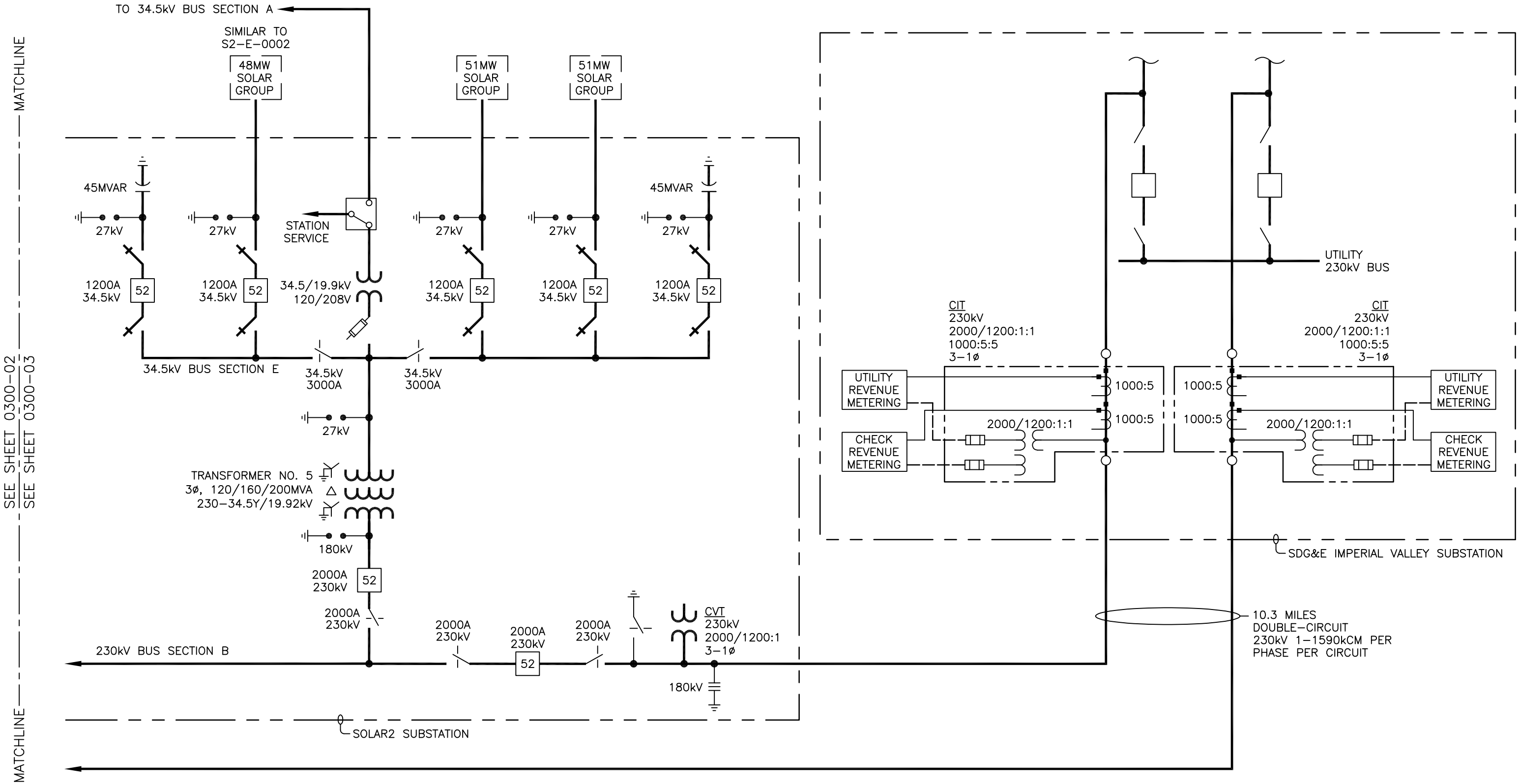

PRELIMINARY

NO.	DATE		BY	APP.
P1	04/16/08	CHANGED TO 750MW SUBSTATION DESIGN	PH	

STANTEC CONSULTING INC.
9400 S.W. BARNES ROAD
STE. 200
PORTLAND, OREGON, 97225
503.297.1631
STANTEC.COM

DRN. STC/SCL	DES. STC/PH	CHK. STC/	DATE 04/08/08
SCALE NONE		APP.	DATE

750-MW SOLAR TWO SUBSTATION
ONE-LINE DIAGRAM, SHEET 3
SOLAR TWO PROJECT

URS

CREATED BY: STANTEC	DATE: 06-11-08	FIG. NO: 3-34
PM: AL	PROJ. NO: 27657102.00300	

P:\Sys4\2000026801-Solar2\Exhibits\S2-E-0300-03.dwg, 4/16/2008 11:51:58 AM, slee

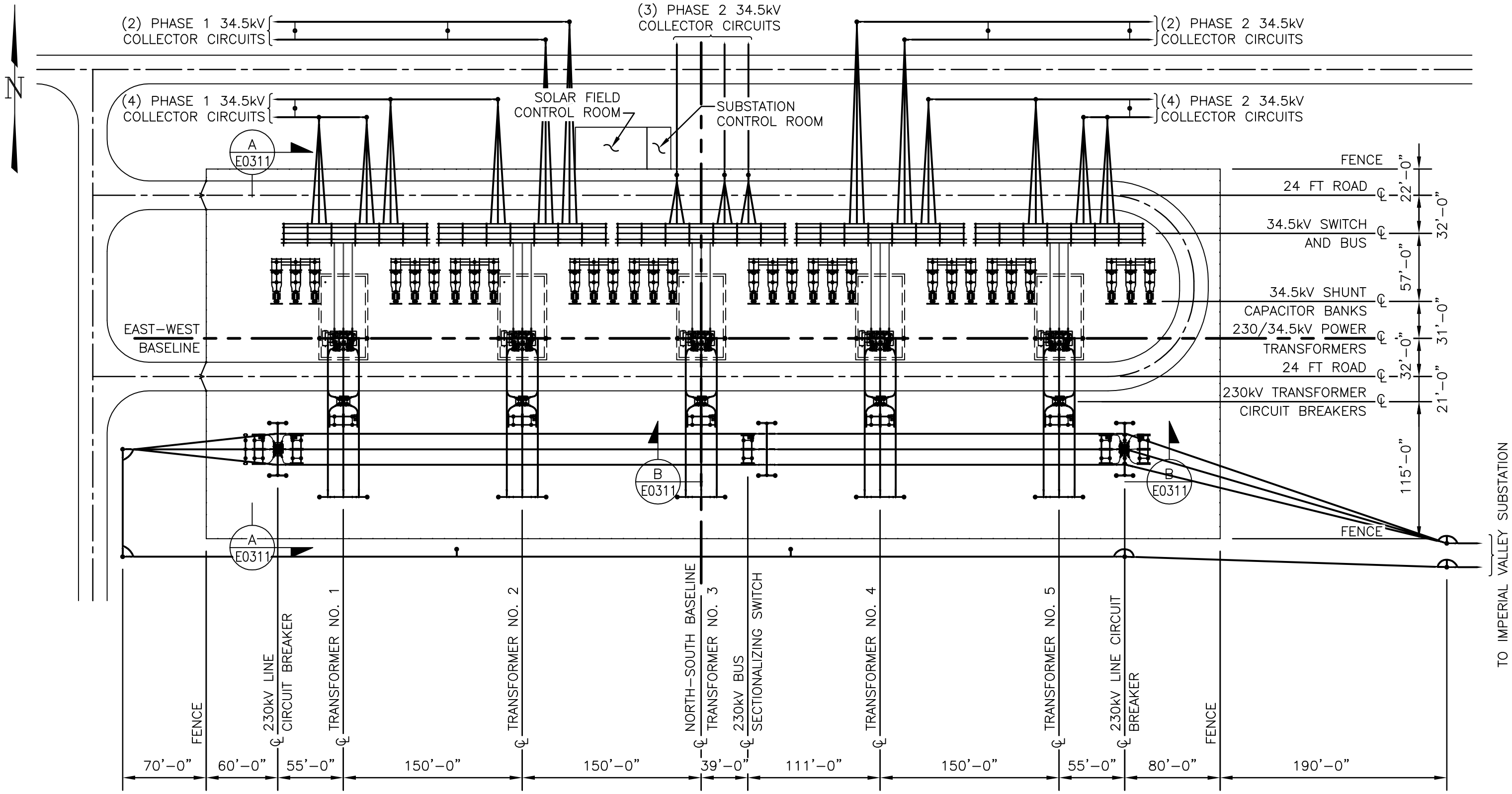

REFERENCE DRAWING
E–0311 BUS ELEVATIONS

PRELIMINARY

NO.	DATE		BY	APP.
P1	10/27/06	ISSUED FOR PRELIMINARY REVIEW	RS	THW
P2	12/15/06	CHANGED TO 450 MW; ISSUED FOR AFC REVIEW	PH	
P3	01/11/07	ADDED CONTAINER/STORAGE BLDG.	PH	
P4	04/17/08	CHANGED TO 750 MW SUBSTATION DESIGN	KJL	PH

Stantec
STANTEC CONSULTING INC.
9400 S.W. BARNES ROAD
STE. 200
PORTLAND, OREGON, 97225
503.297.1631
STANTEC.COM

DRN. STC/GSP	DES. STC/PH	CHK. STC/	DATE 04/15/08
SCALE NOT TO SCALE		APP.	DATE

750-MW SOLAR TWO SUBSTATION
GENERAL ARRANGEMENT PLAN
SOLAR TWO PROJECT

URS

CREATED BY: STANTEC	DATE: 06-11-08	FIG. NO:
PM: AL	PROJ. NO: 27657102.00300	3-35

P:\Sys4\2000026801-Solar2\Exhibits\S2-E-0310-01.dwg, 4/18/2008 1:35:44 PM, gparsons

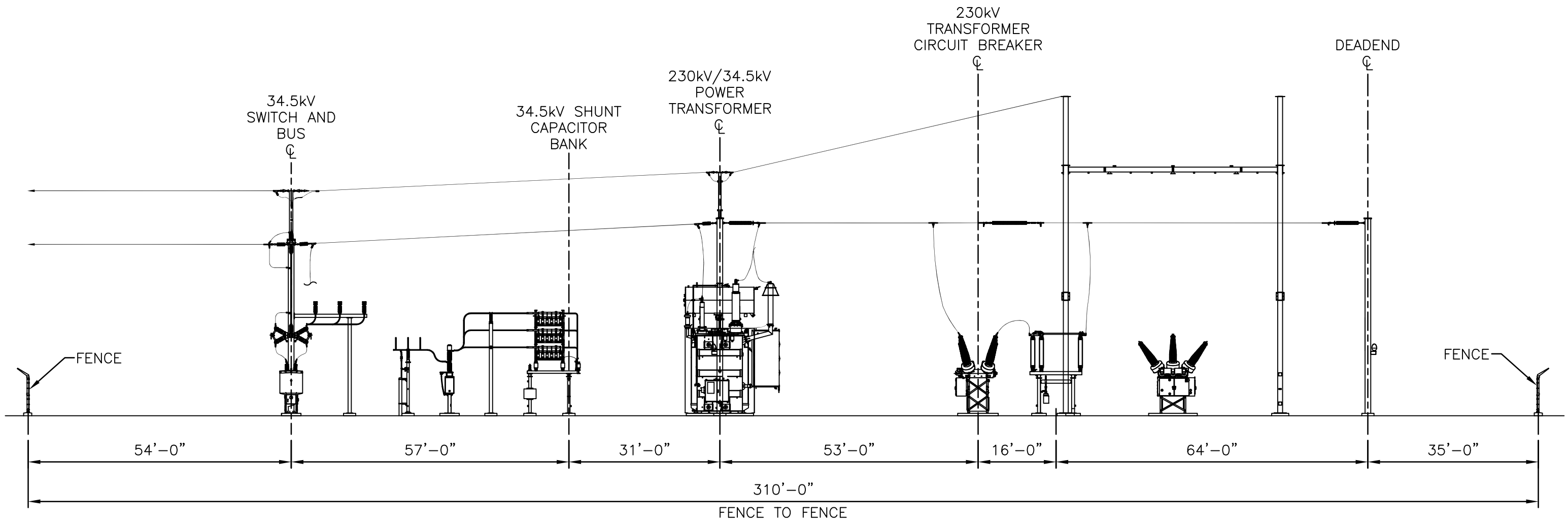

AA
—
ELEVATION
N.T.S.

PRELIMINARY

NO.	DATE		BY	APP.
P1	04/17/08	ISSUED FOR PRELIMINARY REVIEW	PH	

STANTEC CONSULTING INC.
9400 S.W. BARNES ROAD
STE. 200
PORTLAND, OREGON, 97225
503.297.1631
STANTEC.COM

DRN. STC/GSP	DES. STC/PH	CHK. STC/	DATE 04/15/08
SCALE NOT TO SCALE		APP.	DATE

750-MW SOLAR TWO SUBSTATION
ELEVATION, SHEET 1
SOLAR TWO PROJECT

URS

CREATED BY: STANTEC	DATE: 06-11-08	FIG. NO:
PM: AL	PROJ. NO: 27657102.00300	3-36

P:\Sys4\2000026801-Solar2\Exhibits\S2-E-0311-01.dwg, 4/18/2008 12:32:07 PM, gparsons

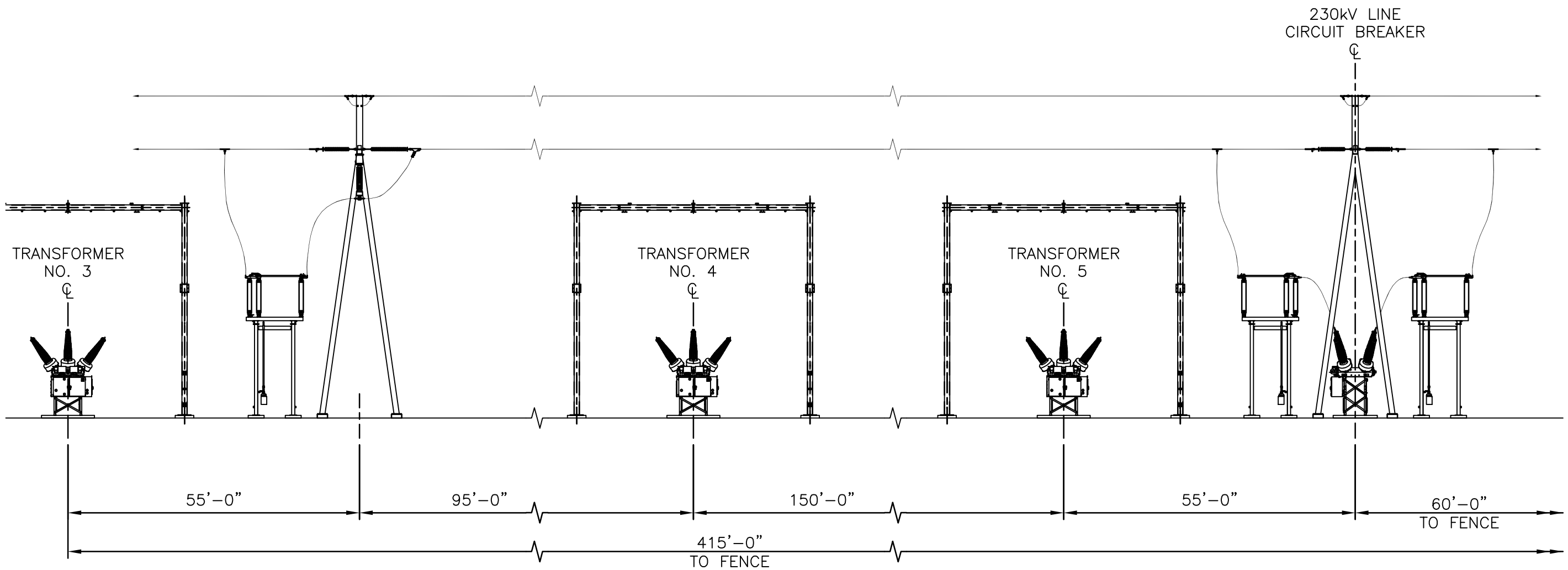

BB
–
ELEVATION
N.T.S.

NOTE: WEST END OF SUBSTATION IS SIMILAR TO A MIRROR OF THE EAST END.

PRELIMINARY

NO.	DATE		BY	APP.
P1	04/17/08	ISSUED FOR PRELIMINARY REVIEW	PH	

STANTEC CONSULTING INC.
9400 S.W. BARNES ROAD
STE. 200
PORTLAND, OREGON, 97225
503.297.1631 STANTEC.COM

DRN. STC/GSP	DES. STC/PH	CHK. STC/	DATE 04/15/08
SCALE NOT TO SCALE		APP.	DATE

750-MW SOLAR TWO SUBSTATION
ELEVATION, SHEET 2
SOLAR TWO PROJECT

URS

CREATED BY: STANTEC	DATE: 06-11-08	FIG. NO:
PM: AL	PROJ. NO: 27657102.00300	3-37

P:\Sys4\2000026801-Solar2\Exhibits\S2-E-0311-02.dwg, 4/18/2008 12:33:37 PM, gparsons

Figure 3.4-38
Typical H-Frame Transmission Structure

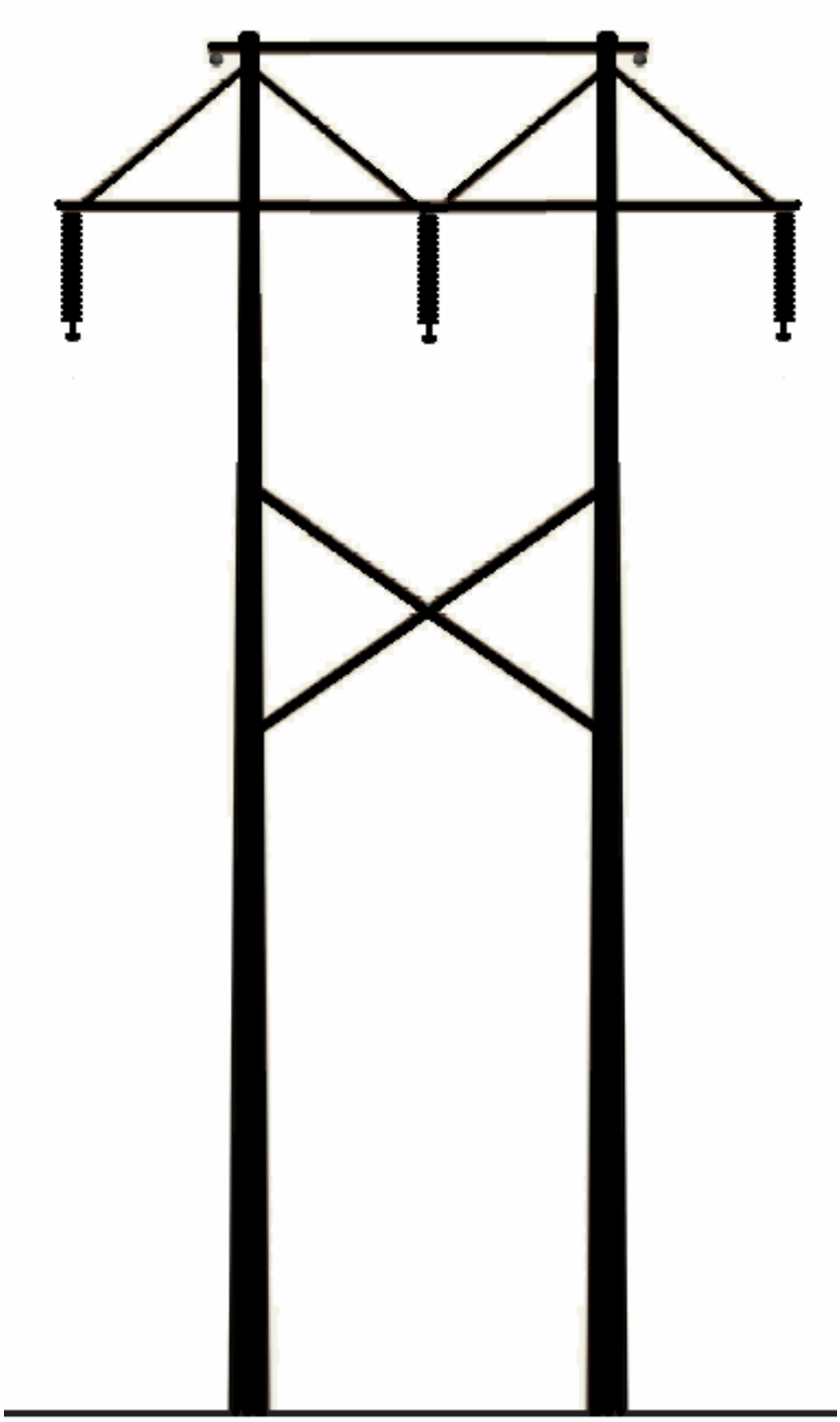

	TYPICAL H-FRAME TRANSMISSION STRUCTURE SOLAR TWO PROJECT		
URS	CREATED BY: STANTEC	DATE: 06-11-08	FIG. NO: 3-38
	PM: AL	PROJ. NO: 27657102.00300	

Figure 3.4-39
Typical Double-Circuit Transmission Structures

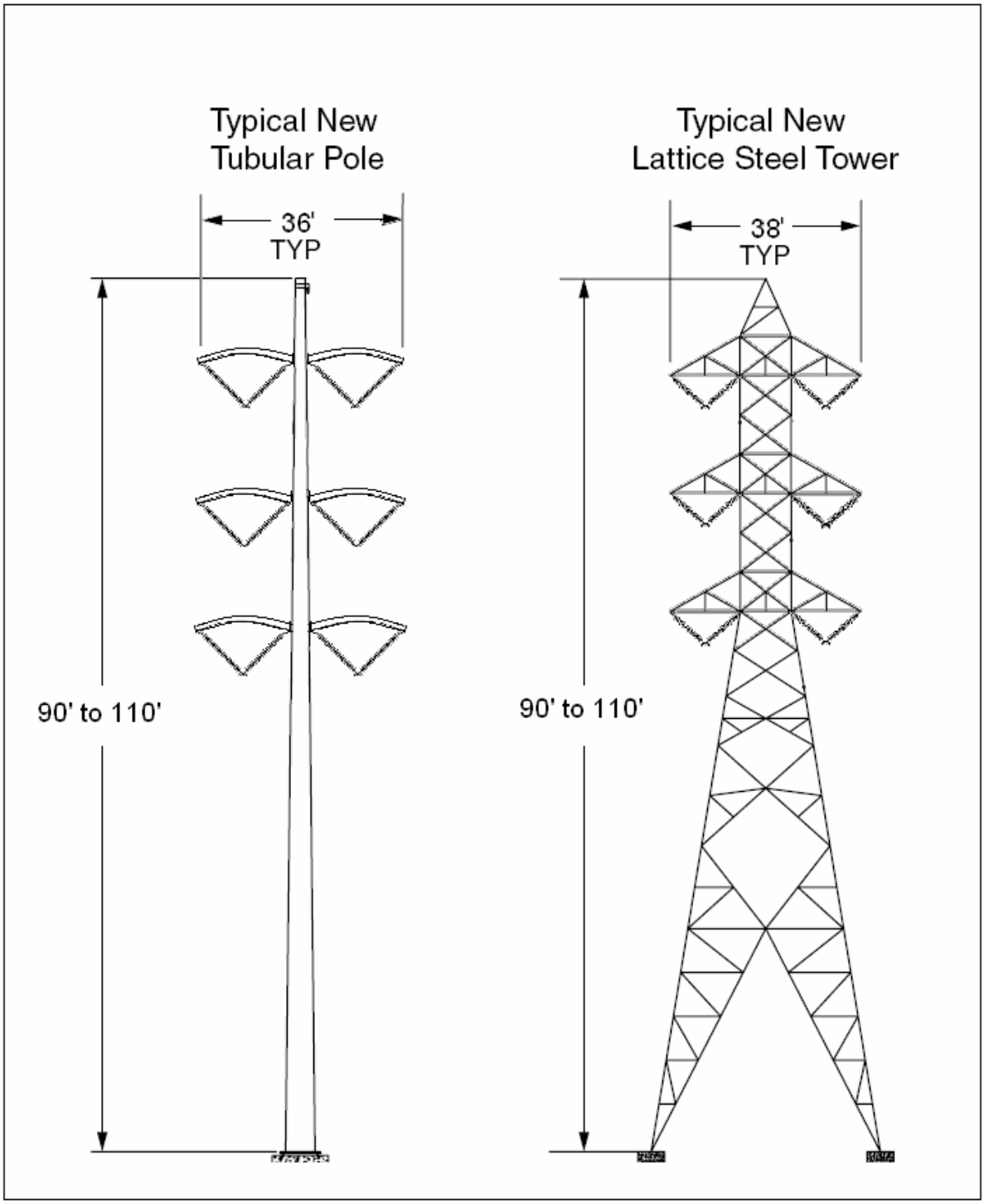

	TYPICAL DOUBLE-CIRCUIT TRANSMISSION STRUCTURES SOLAR TWO PROJECT		
URS	CREATED BY: STANTEC	DATE: 06-11-08	FIG. NO: 3-39
	PM: AL	PROJ. NO: 27657102.00300	

Figure 3.4-40
Solar Two Milestone Schedule – Phase I

ID	Task Name	Duration
1	**PHASE 1 PART 1 - PRECONSTRUCTION**	**577.99 days**
2	**PROJECT APPROVALS**	**315.01 days**
7	**DESIGN/DOCUMENTS**	**323 days**
17	**BID & AWARD**	**417.99 days**
24	**PROCUREMENT**	**240 days**
31	CONTRACTOR MOBILIZATION	6 days
32	**PHASE 1 START OF CONSTRUCTION**	0 days
33	**PHASE 1 PART 2 - GENERAL CONDITION**	**247 days**
34	OFFSITE TRANSMISSION LINES	94 days
35	**SITE / CIVIL**	**131 days**
36	CONSTRUCTION LAYDOWN	11.7 days
37	INITIAL SITE SURVEY/ LAYOUT	22 days
38	**CHANNELIZING WASH AREAS**	**90 days**
41	**PERMANENT ACCESS ROADS**	**109 days**
48	FENCING (4 crews)	55 days
49	**SERVICES COMPLEX**	**247 days**
50	**SUNCATCHER ASSEMBLY BUILDINGS & CONSTRUCTION LAYDOWN**	**49 days**
52	**DISH ASSEMBLY BUILDING**	**125 days**
55	**SERVICES COMPLEX**	**225 days**
56	SITE UTILITIES	5 mons
57	GRAD/ U/G UTILS/ FNDNS/ SLABS/ PADS	5 mons
58	**BUILDINGS**	**125 days**
59	MAINTENANCE FACILITY BUILDING	125 days
60	OPERATION AND ADMINISTRATION BUILDING	100 days
61	WATER TREATMENT SHELTER	60 days
62	CONTROL/RELAY PROTECTION BUILDING	60 days
63	OTHER STRUCTURAL FEATURES	30 days
64	**PHASE 1 PART 3 - SOLAR 2A SUBSTATION & TRANSMISSION**	**130.99 days**
65	SUBSTATION INFRASTRUCTURE (1ST HALF)	95 days
66	ONSITE TRANSMISSION LINES	88 days
67	35kV DIRECT BURY CABLE INCLUDE FIBER-OPTIC	30 days
68	CONTROLS AVAILABLE FOR 1ST 18MW ON-LINE	0 days
69	**PHASE 1 PART 4 - PHASE 1 SUNCATCHER INSTALLATION**	**405 days**
124		

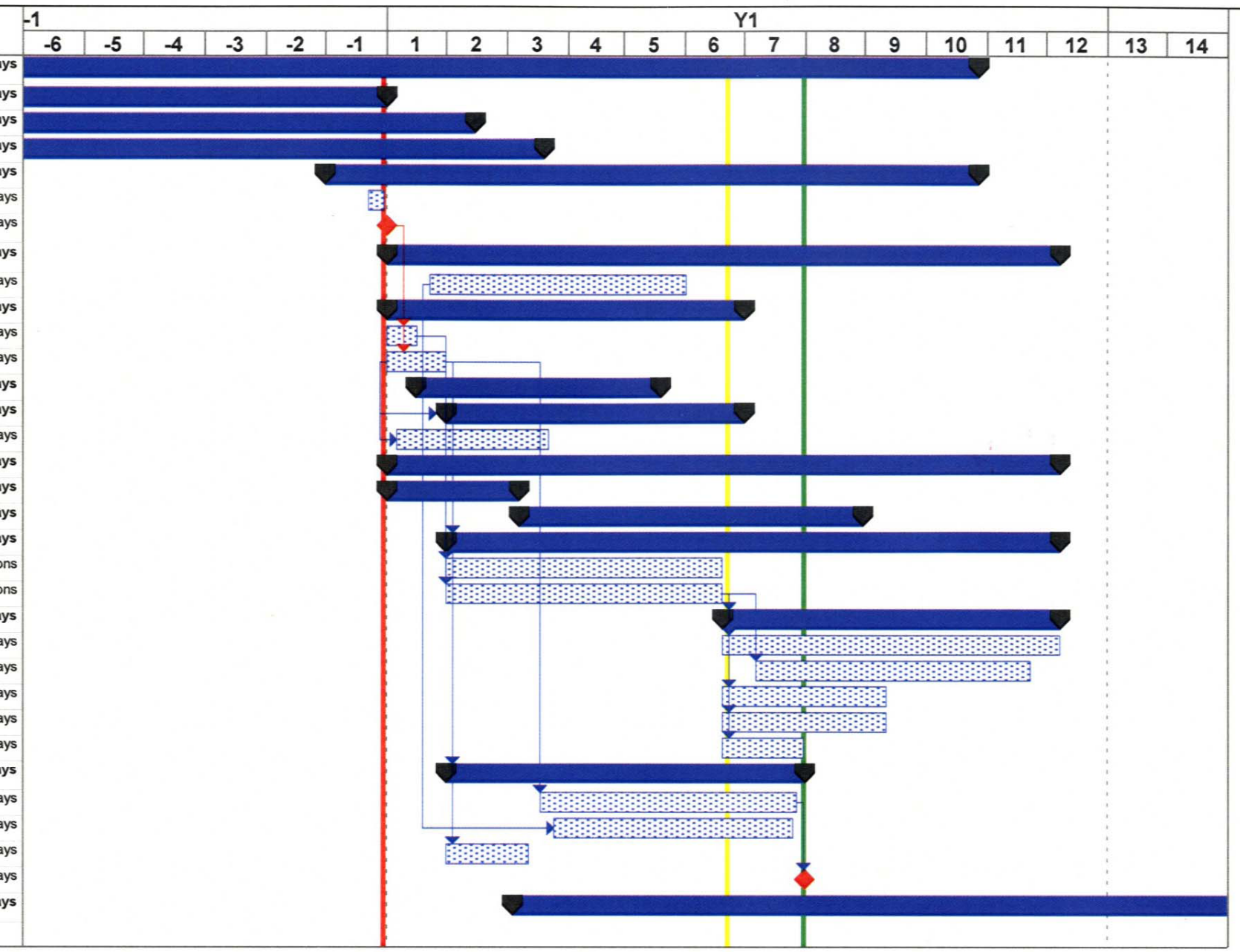

SOLAR TWO MILESTONE SCHEDULE
PHASE I
SOLAR TWO PROJECT

URS

CREATED BY: STANTEC	DATE: 06-11-08	FIG. NO:
PM: AL	PROJ. NO: 27657102.00300	3-40

Figure 3.4-41
Solar Two Milestone Schedule – Phase II

ID	Task Name	Duration
1	**PHASE 1 PART 1 - PRECONSTRUCTION**	**577.99 days**
2	**PROJECT APPROVALS**	**315.01 days**
7	**DESIGN/DOCUMENTS**	**323 days**
17	**BID & AWARD**	**417.99 days**
24	**PROCUREMENT**	**240 days**
31	CONTRACTOR MOBILIZATION	6 days
32	**PHASE 1 START OF CONSTRUCTION**	0 days
33	**PHASE 1 PART 2 - GENERAL CONDITION**	**247 days**
34	OFFSITE TRANSMISSION LINES	94 days
35	**SITE / CIVIL**	**131 days**
36	CONSTRUCTION LAYDOWN	11.7 days
37	INITIAL SITE SURVEY/ LAYOUT	22 days
38	**CHANNELIZING WASH AREAS**	**90 days**
41	**PERMANENT ACCESS ROADS**	**109 days**
48	FENCING (4 crews)	55 days
49	**SERVICES COMPLEX**	**247 days**
50	**SUNCATCHER ASSEMBLY BUILDINGS & CONSTRUCTION LAYDOWN**	**49 days**
52	**DISH ASSEMBLY BUILDING**	**125 days**
55	**SERVICES COMPLEX**	**225 days**
56	SITE UTILITIES	5 mons
57	GRAD/ U/G UTILS/ FNDNS/ SLABS/ PADS	5 mons
58	**BUILDINGS**	**125 days**
59	MAINTENANCE FACILITY BUILDING	125 days
60	OPERATION AND ADMINISTRATION BUILDING	100 days
61	WATER TREATMENT SHELTER	60 days
62	CONTROL/RELAY PROTECTION BUILDING	60 days
63	OTHER STRUCTURAL FEATURES	30 days
64	**PHASE 1 PART 3 - SOLAR 2A SUBSTATION & TRANSMISSION**	**130.99 days**
65	SUBSTATION INFRASTRUCTURE (1ST HALF)	95 days
66	ONSITE TRANSMISSION LINES	88 days
67	35kV DIRECT BURY CABLE INCLUDE FIBER-OPTIC	30 days
68	CONTROLS AVAILABLE FOR 1ST 18MW ON-LINE	0 days
69	**PHASE 1 PART 4 - PHASE 1 SUNCATCHER INSTALLATION**	**405 days**
124		

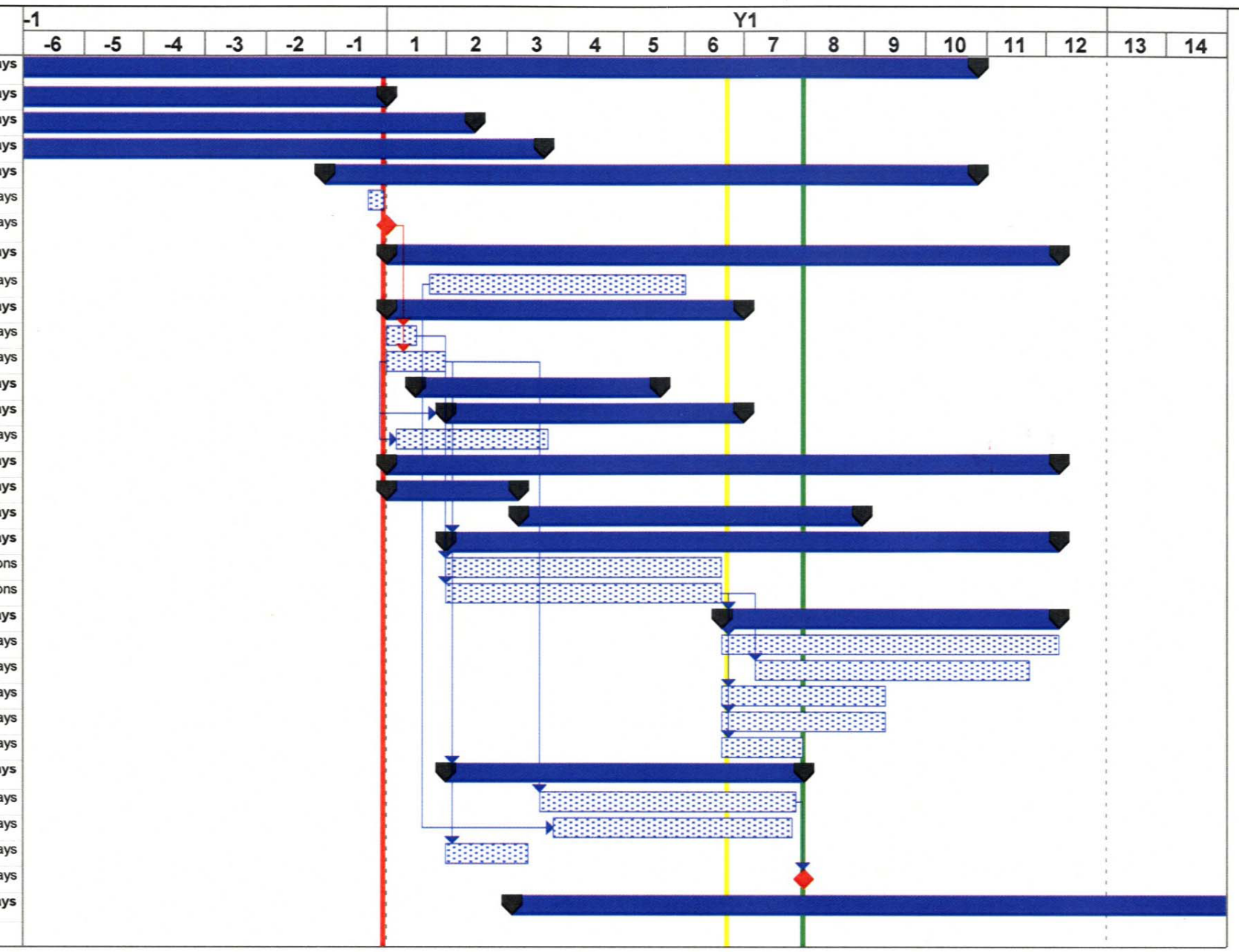

	SOLAR TWO MILESTONE SCHEDULE **PHASE II** **SOLAR TWO PROJECT**		
URS	CREATED BY: STANTEC	DATE: 06-11-08	FIG. NO: 3-41
	PM: AL	PROJ. NO: 27657102.00300	

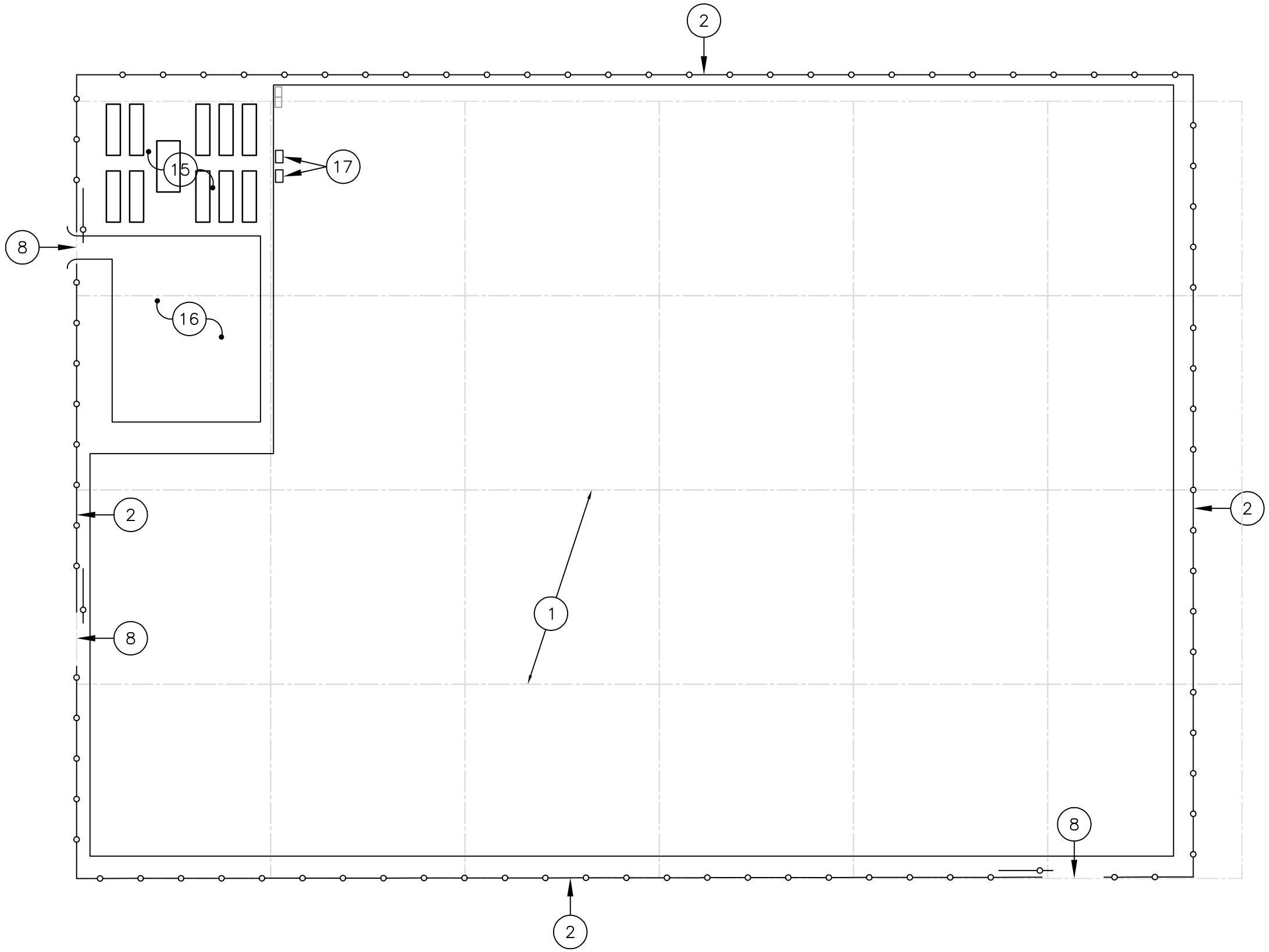

KEYED NOTES

1. 1 ACRE SECTION (TYP. FOR ALL)
2. PERIMETER FENCE
8. ACCESS GATE
15. MOBILE CONSTRUCTION TRAILERS
16. CONSTRUCTION PARKING AREA
17. 20 CU. YD. TEMPORARY CONSTRUCTION DUMPSTERS

0 120' 240'
SCALE

PRELIMINARY

NO.	DATE		BY	APP.
P1	04/16/08	ISSUED FOR PRELIMINARY REVIEW	PH	

STANTEC CONSULTING INC.
9400 S.W. BARNES ROAD
STE. 200
PORTLAND, OREGON, 97225
503.297.1631
STANTEC.COM

DRN. STC/GSP	DES. STC/PH	CHK. STC/	DATE 04/11/08
SCALE 1"=120'		APP.	DATE

CONSTRUCTION LAYDOWN AREA
SITE PLAN
SOLAR TWO PROJECT

URS

CREATED BY: STANTEC	DATE: 06-11-08	FIG. NO: 3-42
PM: AL	PROJ. NO: 27657102.00300	

P:\Sys4\2000026801-Solar2\Exhibits\S2-G-0300-01.dwg, 4/16/2008 2:51:31 PM, slee

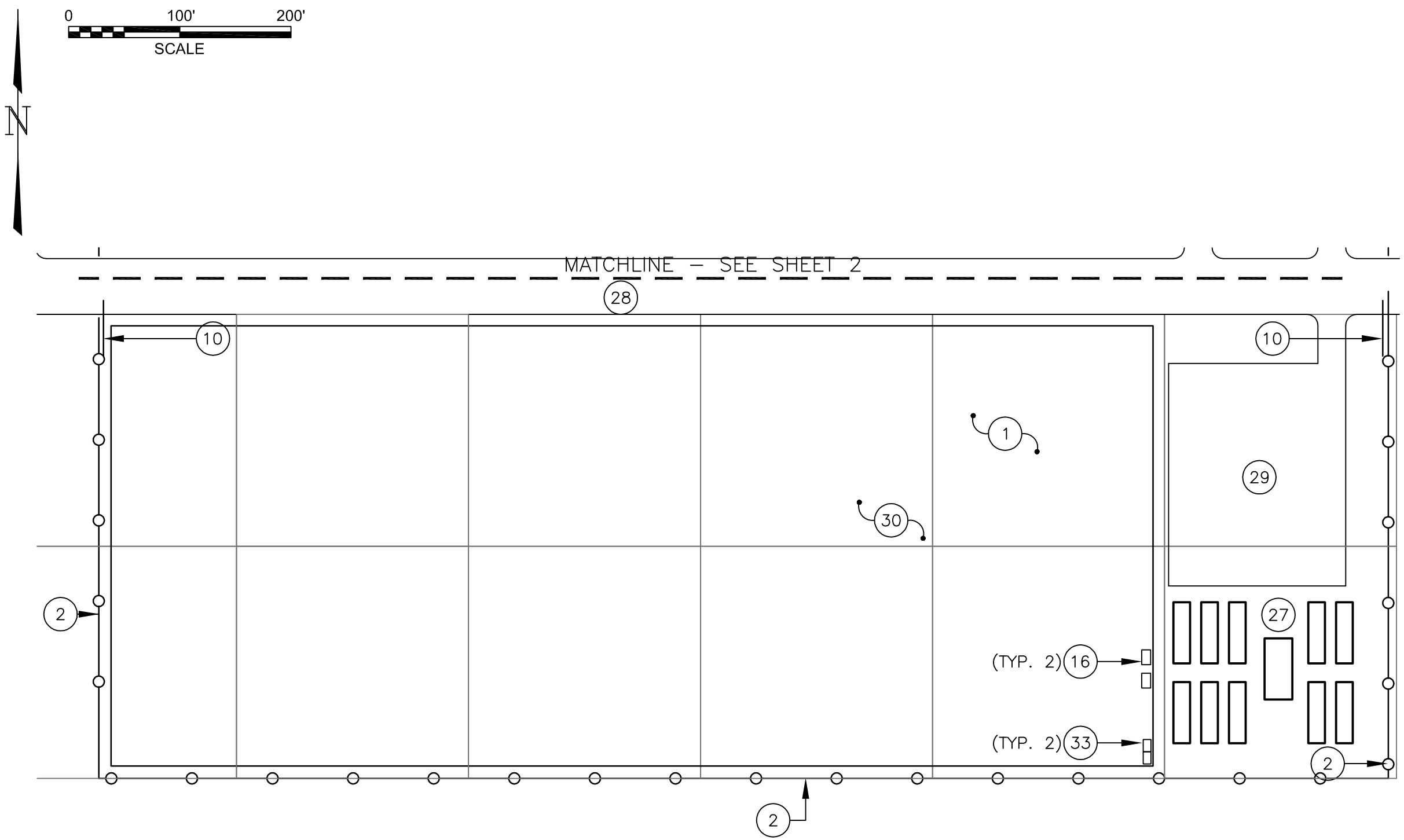

GENERAL NOTE

THIS DRAWING INDICATES 14 ACRES OF THE TOTAL 42 ACRE ADMINISTRATION, ASSEMBLY & CONSTRUCTION AREA.

KEYED NOTES

1. 1 ACRE SECTION (TYP. FOR ALL)
2. PERIMETER FENCE
10. ACCESS GATE
16. 5000 GALLON FUEL STORAGE (W/ CONTAINMENT) FOR ON–SITE VEHICLES (8' DIAx13'–4"L)
27. CONSTRUCTION OFFICE TRAILERS
28. SITE ARTERIAL ROAD
29. CONSTRUCTION EMPLOYEE PARKING LOT, PAVED (160'Wx200'L)
30. CONSTRUCTION LAYDOWN AREA, COMPACTED EARTH (940'Wx400'L)
33. 20 CU. YD. TEMPORARY CONSTRUCTION DUMPSTERS

PRELIMINARY

NO.	DATE		BY	APP.
P1	04/23/07	ISSUED FOR PRELIMINARY REVIEW	PH	
P2	07/17/07	ADDED NORTH ARROW, SCALE	PH	
P3	04/16/08	REISSUED	PH	

STANTEC CONSULTING INC.
9400 S.W. BARNES ROAD
STE. 200
PORTLAND, OREGON, 97225
503.297.1631
STANTEC.COM

DRN. STC/GSP	DES. STC/PH	CHK. STC/	DATE 03/06/07
SCALE 1"=100'		APP.	DATE

MAIN SERVICES COMPLEX CONSTRUCTION
LAYDOWN AREA
SOLAR TWO PROJECT

URS

CREATED BY: STANTEC	DATE: 06-11-08	FIG. NO: 3-43
PM: AL	PROJ. NO: 27657102.00300	

P:\Sys4\2000026801-Solar2\Exhlblts\S2-G-0100-03.dwg, 4/16/2008 11:44:15 AM, slee

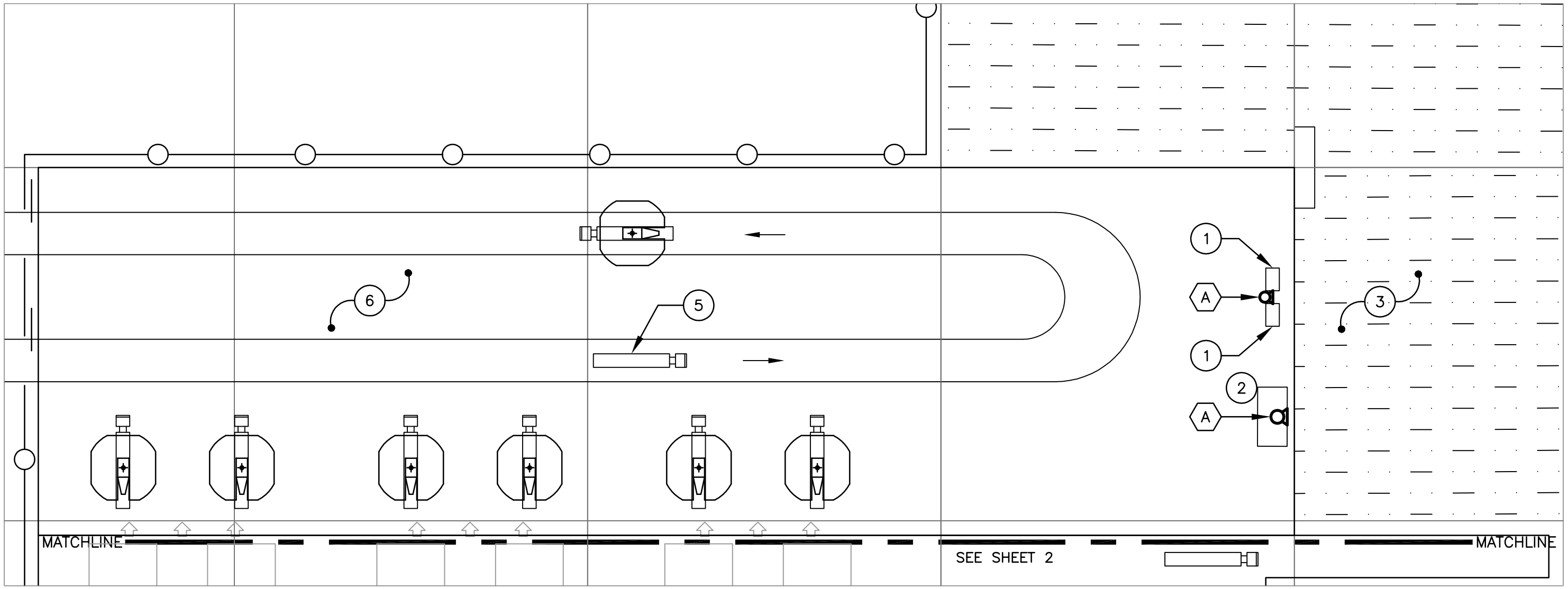

PLUMBING EQUIPMENT

A. EMERGENCY EYEWASH/SHOWER (EW/ES) EQUAL TO HAWS MODEL 8300.

KEYED NOTES

1. 5000 GALLON FUEL STORAGE (W/ CONTAINMENT) FOR ON–SITE VEHICLES
2. STORAGE AREA FOR 350 HYDROGEN BOTTLES
3. 1 ACRE EVAPORATION POND
4. PAVED AREA FOR ASSEMBLED DISH TRANSPORT & MAINTENANCE/DISH WASHING VEHICLES
5. TRUCK CAB W/ TRAILER OR FLAT BED (TYP. FOR ALL).

PRELIMINARY

NO.	DATE		BY	APP.
P1	04/23/07	ISSUED FOR PRELIMINARY REVIEW	PH	
P2	04/16/08	REISSUED	PH	

STANTEC CONSULTING INC.
9400 S.W. BARNES ROAD
STE. 200
PORTLAND, OREGON, 97225
503.297.1631
STANTEC.COM

DRN. STC/GSP	DES. STC/PH	CHK. STC/	DATE 03/06/07
SCALE 1"=60'		APP.	DATE

MAIN SERVICES COMPLEX PLUMBING
SITE PLAN – PART A
SOLAR TWO PROJECT

URS

CREATED BY: STANTEC	DATE: 06-11-08	FIG. NO: 3-44
PM: AL	PROJ. NO: 27657102.00300	

P:\Sys4\2000026801-Solar2\Exhibits\S2-P-0100-01.dwg, 4/16/2008 12:42:57 PM, slee

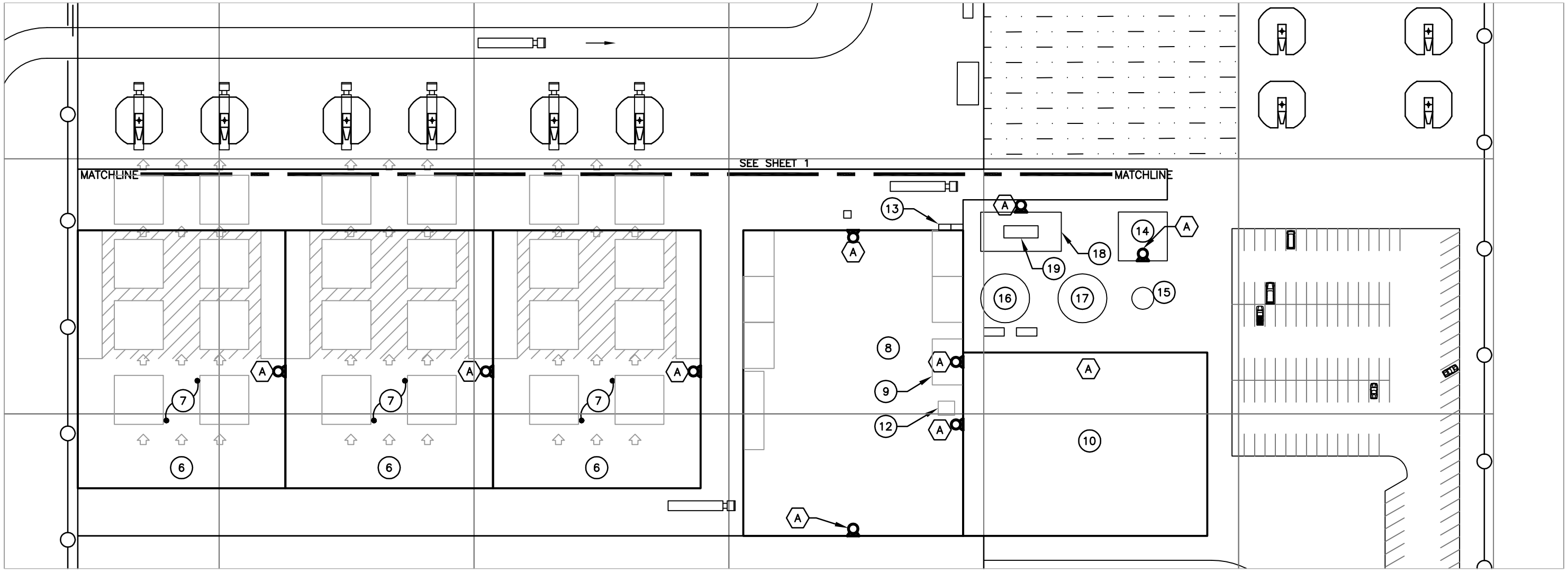

PLUMBING EQUIPMENT

A. EMERGENCY EYEWASH/SHOWER (EW/ES) EQUAL TO HAWS MODEL 8300.

KEYED NOTES

6. ASSEMBLY BUILDING (TYP. 3)
7. CSP DISH ASSEMBLY BAY
8. MAINTENANCE/CONTROL ROOM BLDG.
9. CHEMICAL STORAGE AREA
10. ADMINISTRATION BLDG.
11. NOT USED
12. 150 GALLON LUBRICATING OIL RECYCLING TANK.
13. (2) 8 CU. YD. DUMPSTERSWATER TREATMENT BLDG.
14. WATER TREATMENT BLDG.
15. POTABLE WATER TANK
16. FIRE PROTECTION/MIRROR WASHING WATER TANK
17. RAW WATER TANK
18. ALTERNATE 1: ABOVE GROUND 10,000 GALLON/DAY CAPACITY WASTE WATER TREATMENT FACILTY
19. ALTERNATE 2: BELOW GROUND 10,000 GALLON SEWAGE HOLDING TANK.

PRELIMINARY

NO.	DATE		BY	APP.
P1	04/23/07	ISSUED FOR PRELIMINARY REVIEW	PH	
P2	04/08/08	REVISED ADMIN. & MAINT. BUILDINGS FOR 600MW;		
		REMOVED WEATHER STATION/NIP TRACKER	PH	
P3	04/16/08	REVISED MAINT. BUILDINGS FOR 750MW	PH	

STANTEC CONSULTING INC.
9400 S.W. BARNES ROAD
STE. 200
PORTLAND, OREGON, 97225
503.297.1631
STANTEC.COM

DRN. STC/GSP	DES. STC/PH	CHK. STC/	DATE 03/06/07
SCALE 1"=60'		APP.	DATE

MAIN SERVICES COMPLEX PLUMBING
SITE PLAN – PART B
SOLAR TWO PROJECT

URS

CREATED BY: STANTEC	DATE: 06-11-08	FIG. NO:
PM: AL	PROJ. NO: 27657102.00300	3-45

P:\Sys4\2000026801-Solar2\Exhlblts\S2-P-0100-02.dwg, 4/16/2008 1:10:52 PM, slee

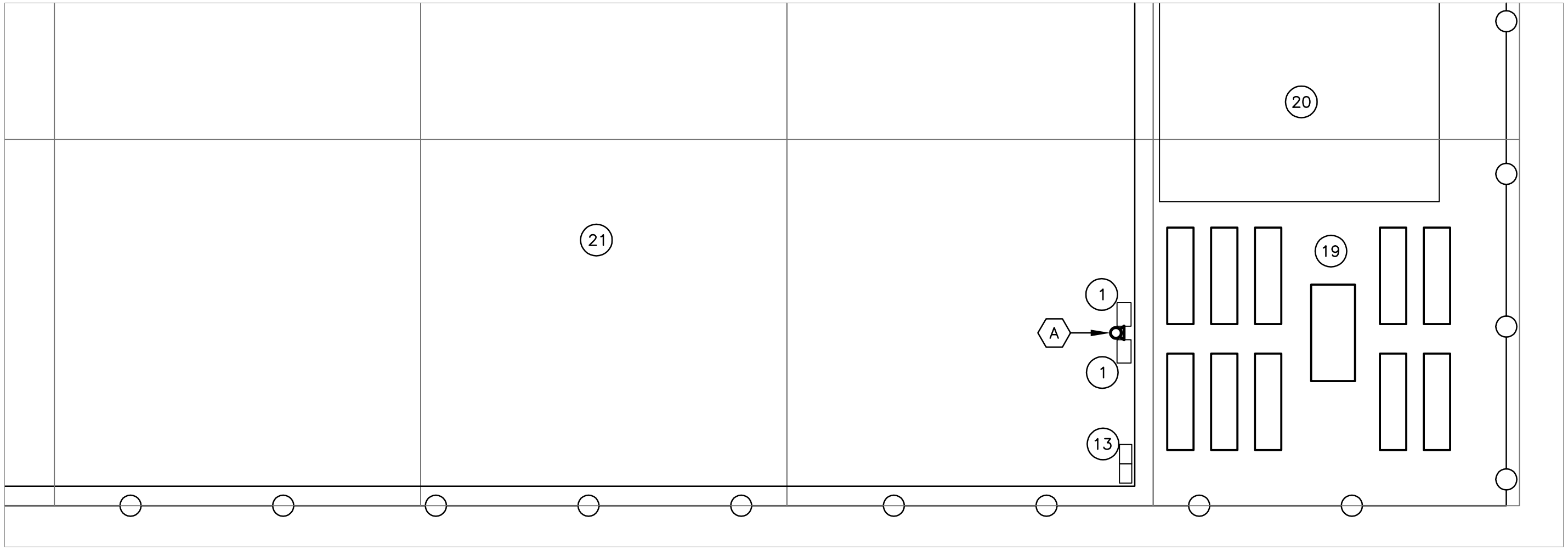

PLUMBING EQUIPMENT

A. EMERGENCY EYEWASH/SHOWER (EW/ES) EQUAL TO HAWS MODEL 8300.

KEYED NOTES

1. ASSEMBLY BUILDING (TYP. 3)
13. (2) 8 CU. YD. DUMPSTERSWATER TREATMENT BLDG.
19. CONSTRUCTION OFFICE TRAILERS
20. CONSTRUCTION EMPLOYEE PARKING LOT, PAVED
21. CONSTRUCTION LAYDOWN AREA

PRELIMINARY

NO.	DATE		BY	APP.
P1	04/23/07	ISSUED FOR PRELIMINARY REVIEW	PH	
P2	04/16/08	REISSUED	PH	

STANTEC CONSULTING INC.
9400 S.W. BARNES ROAD
STE. 200
PORTLAND, OREGON, 97225
503.297.1631
STANTEC.COM

DRN. STC/GSP	DES. STC/PH	CHK. STC/	DATE 03/06/07
SCALE 1"=60'		APP.	DATE

MAIN SERVICES COMPLEX PLUMBING
SITE PLAN – PART C
SOLAR TWO PROJECT

URS

CREATED BY: STANTEC	DATE: 06-11-08	FIG. NO: 3-46
PM: AL	PROJ. NO: 27657102.00300	

P:\Sys4\2000026801-Solar2\Exhibits\S2-P-0100-03.dwg, 4/16/2008 12:47:56 PM, slee