WATER BALANCE DIAGRAM FOR BLYTHE PROJECT @ T_d = 59F , RH = 60%

With Evaporative Cooling

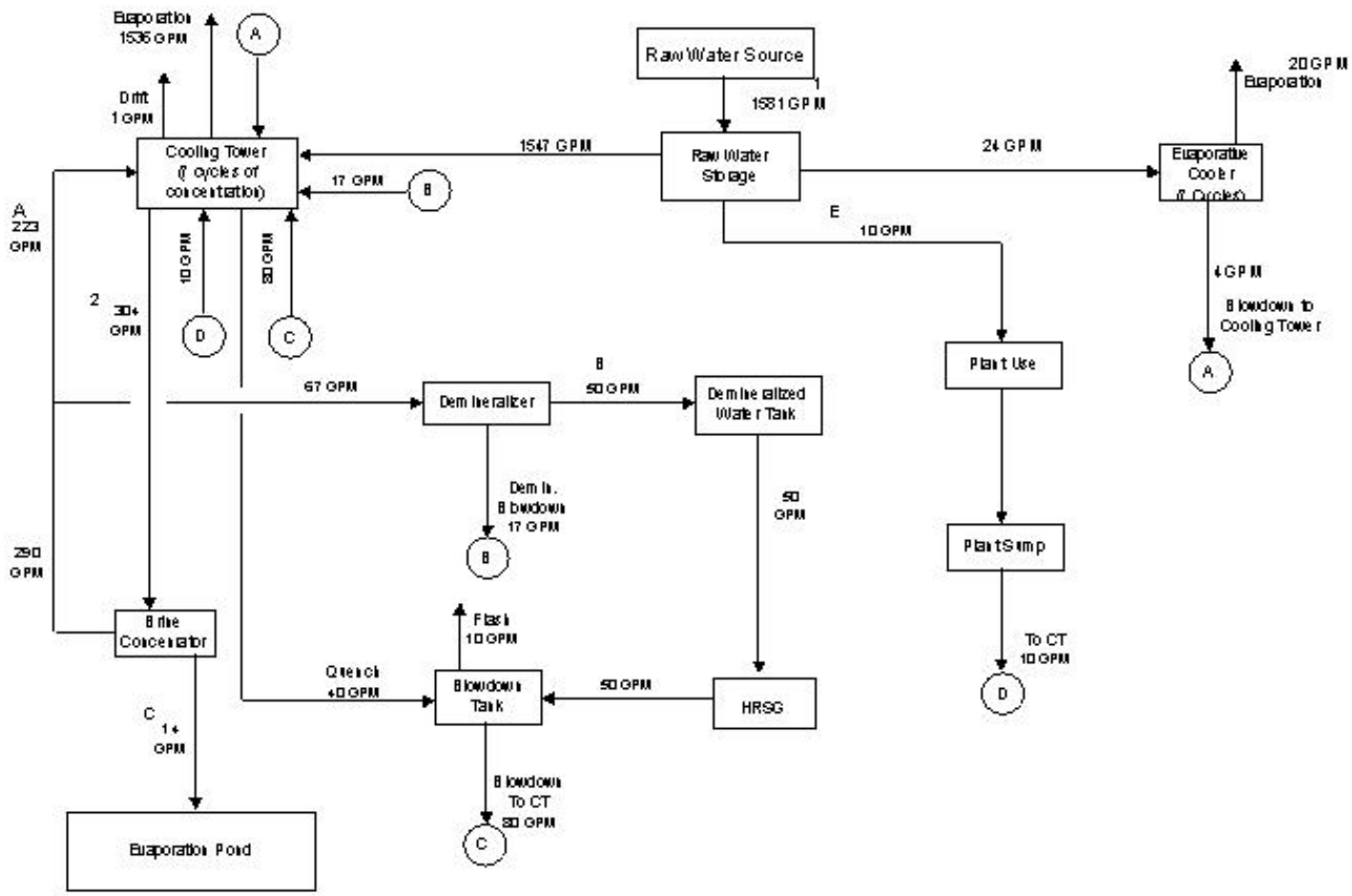

BLYTHE ENERGY PROJECT PHASE II

FIGURE 7.13-10A
Water Balance Diagram
for 59 Degrees

ANALYSIS AREA: RIVERSIDE CO., CALIFORNIA	
DATE: 12/2001	ArcView FILE: D:\BLYTHE\1135...FIG12_2001
PLOT SCALE: NTS	DRAWN BY: GF