WATER BALANCE DIAGRAM FOR BLYTHE PROJECT @ T_d = 110F , 5% RELATIVE HUMIDITY
With Evaporative Cooling

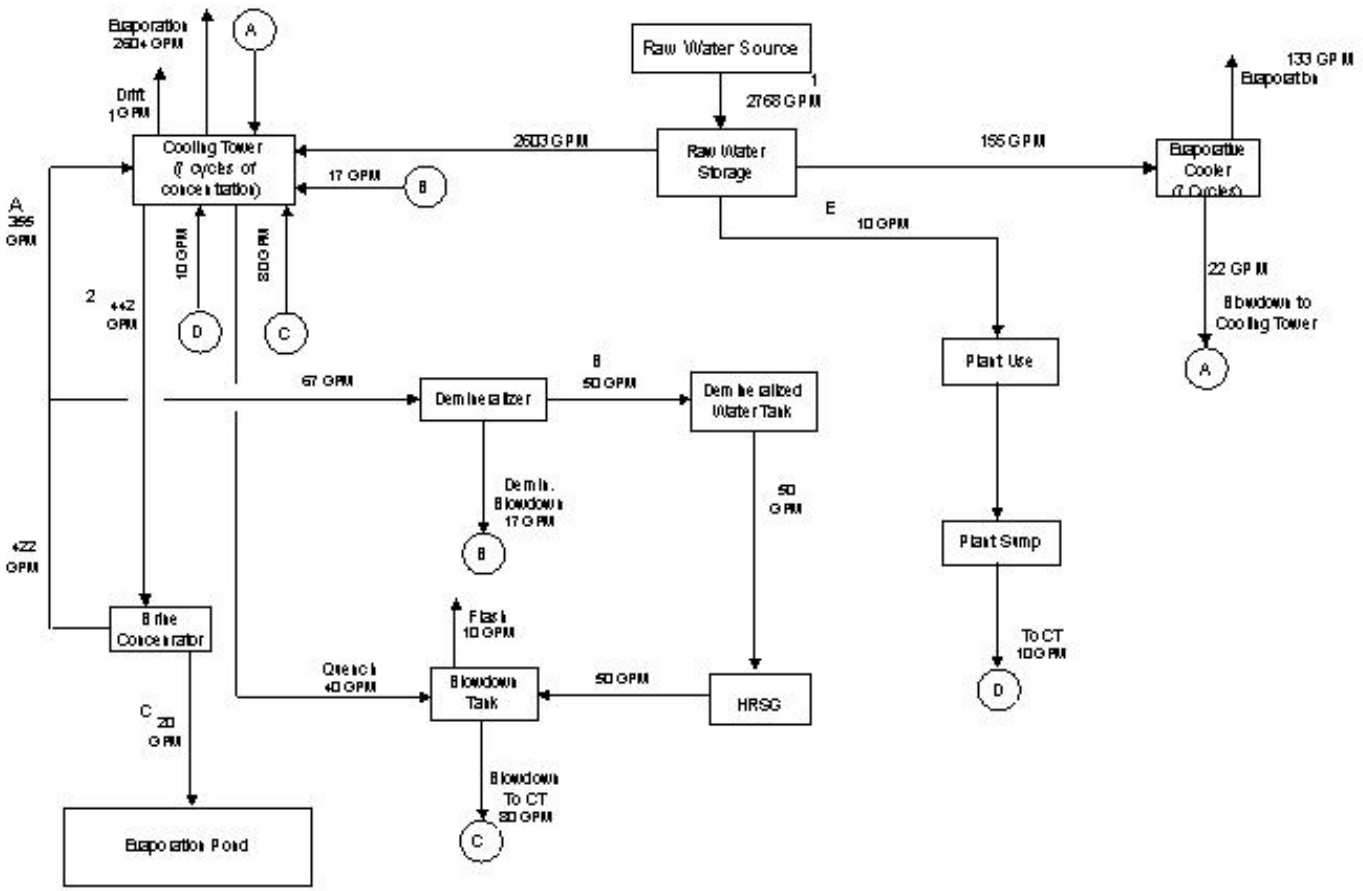

BLYTHE ENERGY PROJECT PHASE II

FIGURE 7.13-10B
Water Balance Diagram
for 110 Degrees

ANALYSIS AREA: RIVERSIDE CO., CALIFORNIA	
DATE: 12/2001	ArcView FILE: D:\BLYTHE\1135...FIG12_200
PLOT SCALE: NTS	DRAWN BY: GF