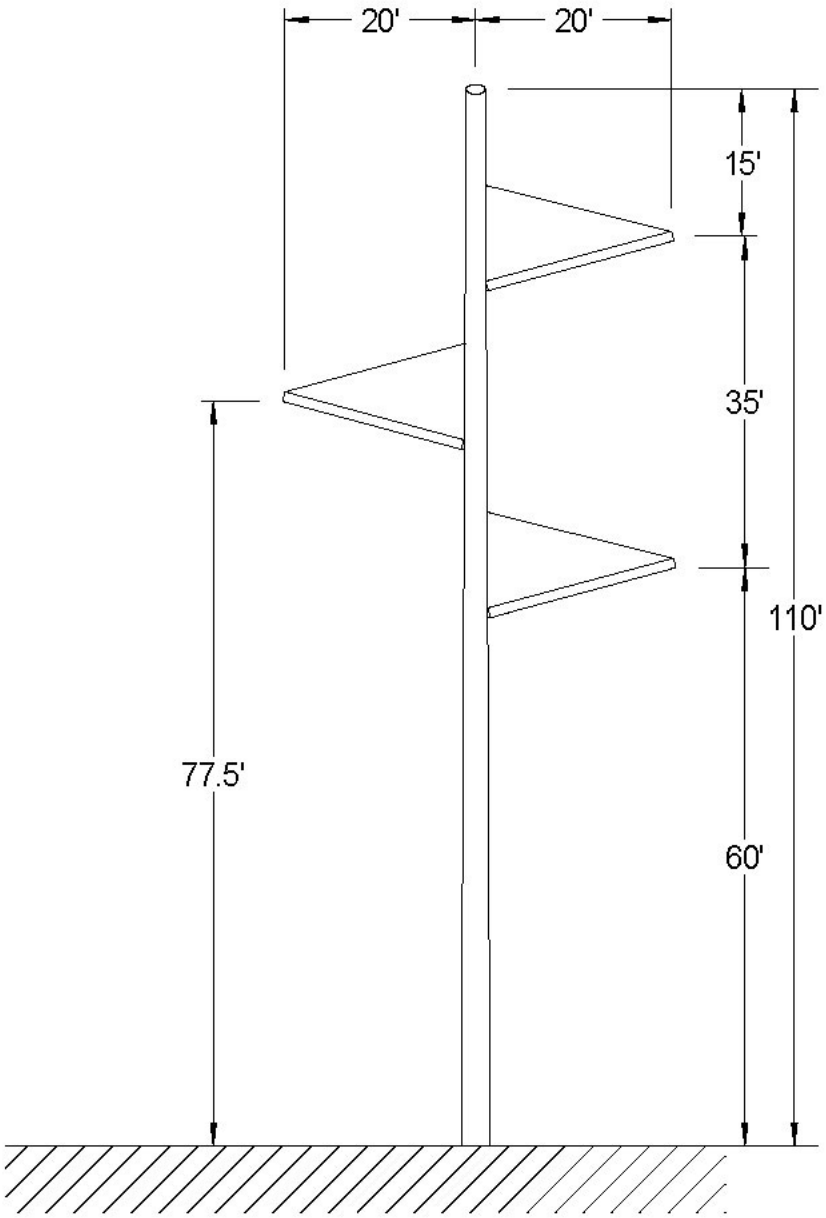

Cadiente Consulting

DATE: 06/02/03

REV: A

CAITHNESS BLYTHE II

Typical 500kV Transmission Structure – Vertical Configuration