ITEMS:

1. PROVISION ON BASE FOR SKIDDING
2. TRANSFORMER LIFTING LUGS
3. STAINLESS STEEL GROUND PADS (2), EACH WITH CRIMP LUG FOR 4/0 CABLE
4. STAINLESS STEEL DIAGRAMATIC NAMEPLATE
5. MANHOLE WITH COVER
6. WELDED TOP COVER
7. COOLING RADIATORS, DEMOUNTABLE, WITH ISOLATION VALVES AND VENT AND DRAIN PLUGS
8. HV BUSHING, 25KV, 15CKV BIL, LAPP (3) WITH 4 HOLE NEMA PAD
9. LV BUSHING, 5KV, 75KV BIL (3) EACH WITH 3 CRIMP LUGS, 750MCM
10. COMBINATION LOWER DRAIN AND FILTER VALVE WITH SAMPLER
11. UPPER FILTER VALVE WITH PIPE PLUG
12. VTC PRESSURIZATION TEST POINT
13. LIQUID LEVEL GAUGE WITH CONTACTS, GAUGE CENTER IS 25°C OIL LEVEL MARK
14. OIL TEMPERATURE GAUGE WITH CONTACTS, TILTED 30°
15. PRESSURE VACUUM GAUGE WITH BLEEDER, TILTED 30°
16. PRESSURE RELIEF DEVICE WITH CONTACTS
17. DE-ENERGIZED, NO LOAD MANUAL TAP CHANGER WITH PROVISION FOR PADLOCKING
18. AIR TERMINAL CHAMBER, NEMA 3R, WITH BOLTED REMOVABLE END PANEL
19. JUNCTION BOX, 36 X 30 X 12, NEMA 4, PADLOCKABLE
20. WINDING TEMPERATURE GAUGE, SIMULATION SYSTEM, WITH CONTACTS, TILTED 30°
21. SUDDEN PRESSURE RELAY
22. JACK PADS WITH PULLING EYES
23. NEUTRAL GROUNDING RESISTOR IN PAINTED (ANSI-70 EPOXY) ALUMINUM ENCLOSURE
24. GROUND BUS, 1/4 X 2 COPPER, WITH 2 CRIMP LUGS FOR 4/0 CABLE
25. GLOBE VALVE, 2", FOR VACUUM CONNECTION
26. FRP SUPPORT FOR CUSTOMER CABLES
27. FANS
28. STAINLESS STEEL ID TAG: "EE-210" FOR JOB 9062A
    "EE-220" FOR JOB 9062B
29. LV NEUTRAL BUSHING, 5KV, 75KV BIL, WITH 4 HOLE NEMA PAD
30. BOX FOR EXTERNAL CORE GROUND BUSHING

NOTES:

1. TYPE II MINERAL OIL FILLED TRANSFORMER-APPX 1872 GALLONS
2. OUTDOOR SERVICE
3. TANK DESIGNED TO ELIMINATE CORNER WELDS
4. PAINT: ANSI-70 EPOXY
5. UNIT DESIGNED FOR SEALED TANK OIL PRESERVATION
6. SEE SHEETS 21, 22 FOR SCHEMATIC
7. ALL ACCESSORY WIRING IN RIGID ALUMINUM CONDUIT, EXCEPT FINAL 18" MAY BE IN LIQUITITE FLEX CONDUIT
8. ALL GASKETS WILL HAVE COMPRESSION STOPS
9. UNIT DESIGNED FOR FULL VACUUM FILLING
10. GUARANTEED LOSSES: 13KW NL, 55KW LL
11. LV LUGS ARE BOLTED TO BUSHINGS WITH SS HARDWARE
12. UNIT SHIPS WITH RADIATORS, FANS, NGR AND HV SPADES DEMOUNTED-

    SHIPPING WEIGHTS:

RADIATORS	5000 LBS
FANS & SPADE CONNECTORS	400 LBS
OIL FOR RADS	2000 LBS
(5 DRUMS @ 55 GALLON=275 GALLONS)	
NGR	500 LBS
MAIN UNIT	56600 LBS

(NOTE THAT HV BUSHINGS SHIP MOUNTED)

13. SEE SHEET 102 FOR SEGMENT 3 VIEW AND FOR REVISION BLOCK DESCRIPTIONS
14. CG1 IS FULLY ASSEMBLED, CG2 IS WITHOUT RADIATORS, OIL, FANS, NGR
15. ALL DEVICES ARE LABELED WITH STAINLESS STEEL TAGS TO MATCH DRAWING NOMENCLATURE

LIQUID FILLED TRANSFORMER DATA			
NCG/SN: 45012NA008		MVA: 12/16	
PH: 3	60 Hz	65°C RISE	
TAP: ± 2 x 2.5 %		CLASS: OA/FA	
IMP: 6.0 % NOM. ON 12MVA BASE		WT: 54500 LBS	
WINDINGS: COPPER			
	VOLTS	BIL	AMPS@16MVA
HV	16000 DELTA	150 KV	513 NOM
LV	4160 GND Y/2400	60 KV	2221

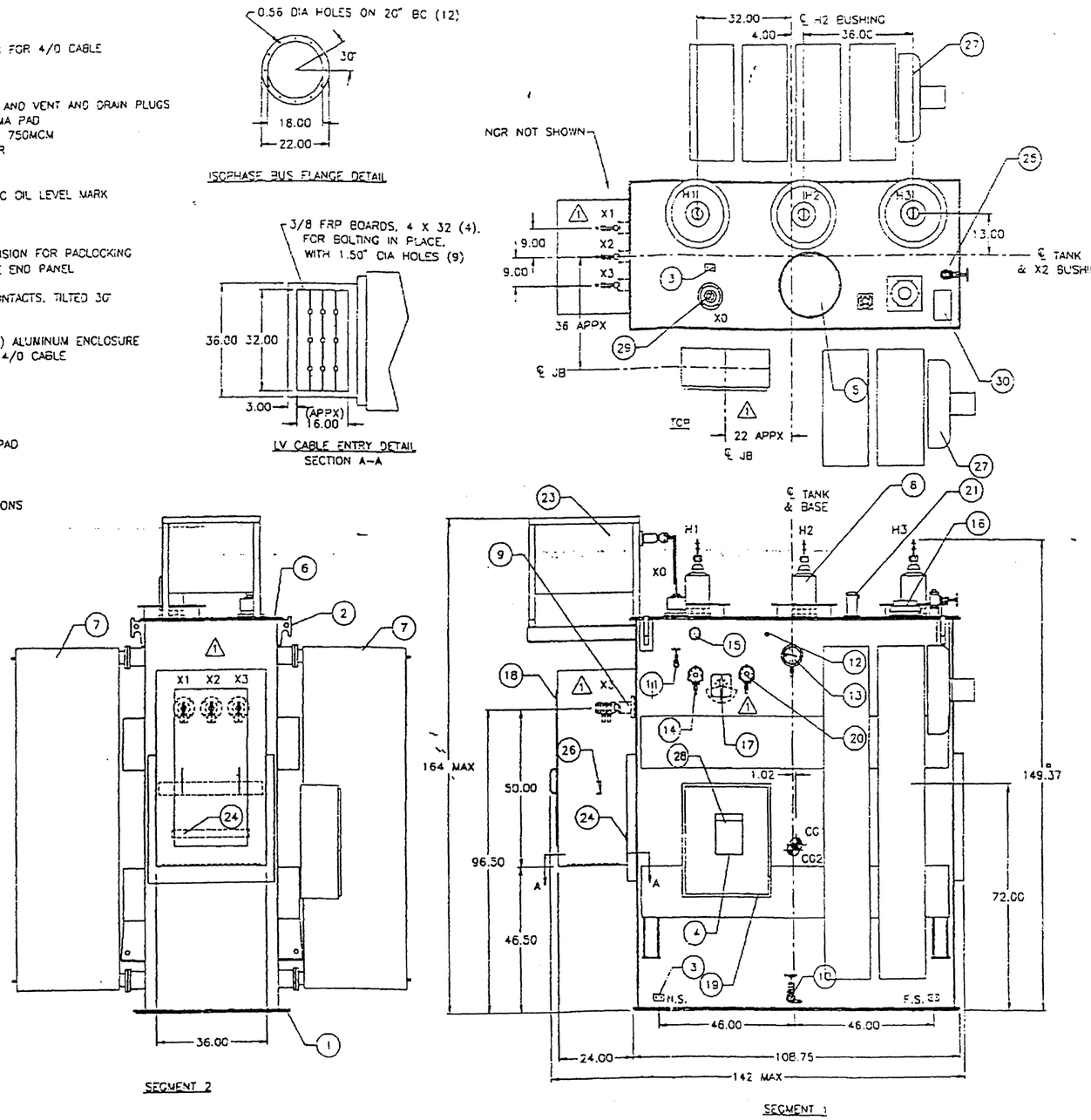

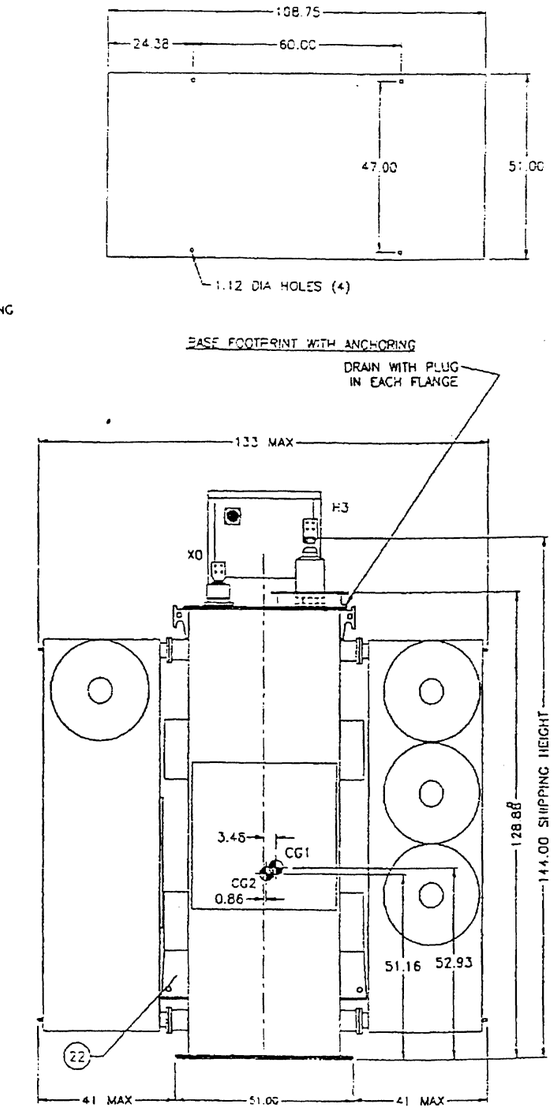

Figure B-24

USE FOR ILLUSTRATION ONLY-NOT FOR DESIGN

REV	DATE	REVISION DESCRIPTION	DES. CHK	APPROVED
A	3/12/99	ISSUED FOR PLANNING	RBM	

DUKE/FLUOR DANIEL

POWER ENGINEERING, CONSTRUCTION, OPERATIONS & MAINTENANCE

R MARTIN

R WLODZIK

TYPICAL TRANSFORMER

NONE

SU-6-TY-1

A