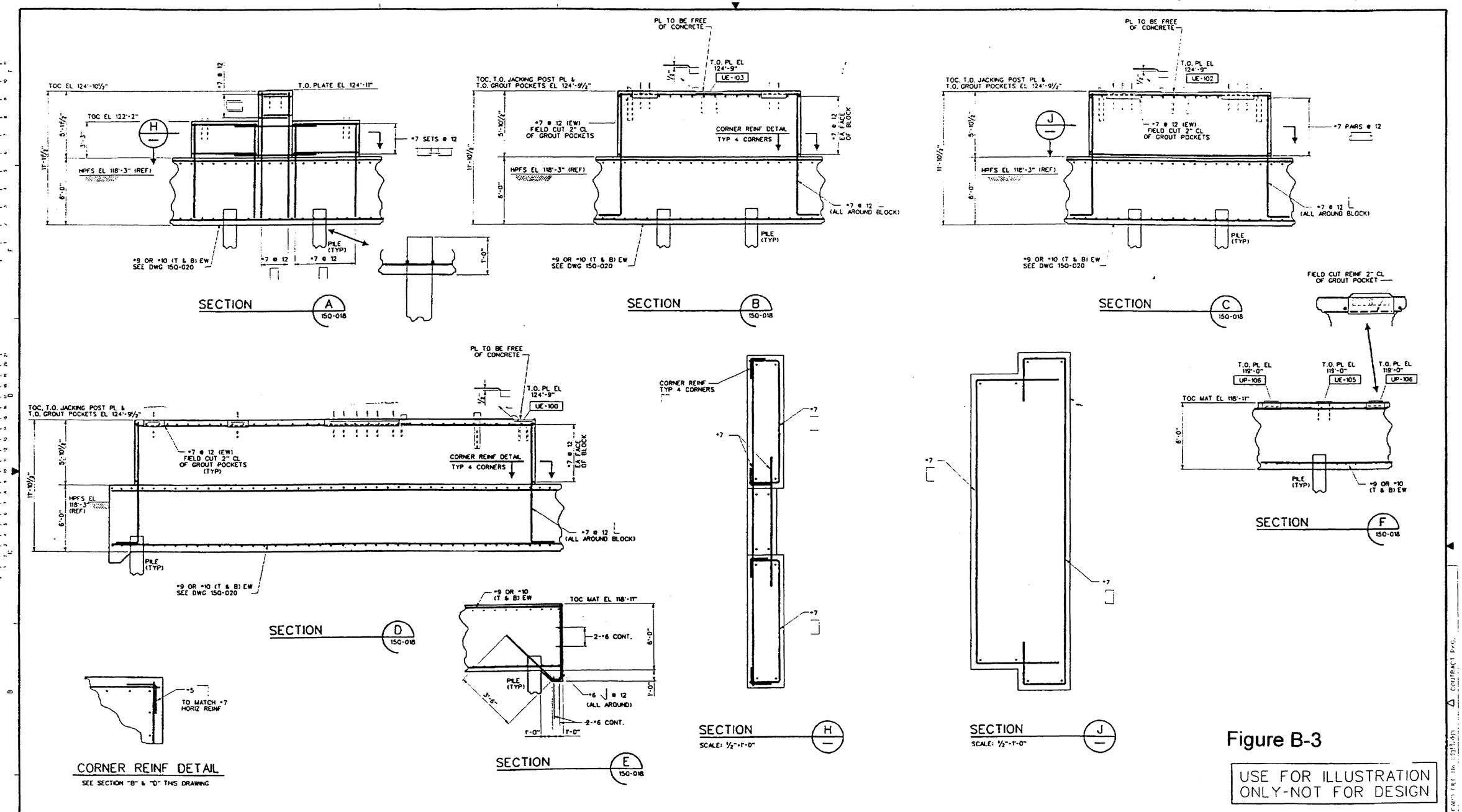

Figure B-3

USE FOR ILLUSTRATION ONLY-NOT FOR DESIGN

REV	DATE	REVISION DESCRIPTION	DES CHK	APPROVED
A	8/12/99	ISSUED FOR PLANNING	RRM	

REV	DATE	REVISION DESCRIPTION	DES CHK	APPROVED

DWG NO	REFERENCE DRAWINGS

DUKE/FLUOR DANIEL

POWER ENGINEERING, CONSTRUCTION, OPERATIONS & MAINTENANCE

DESIGNED BY: R MARTIN

CHECKED BY:

SUPERVISOR: R MLODZIK

TYPICAL GTG FOUNDATION

SCALE: NONE

DRAWING NUMBER: CD-1-GT-3

REV: A