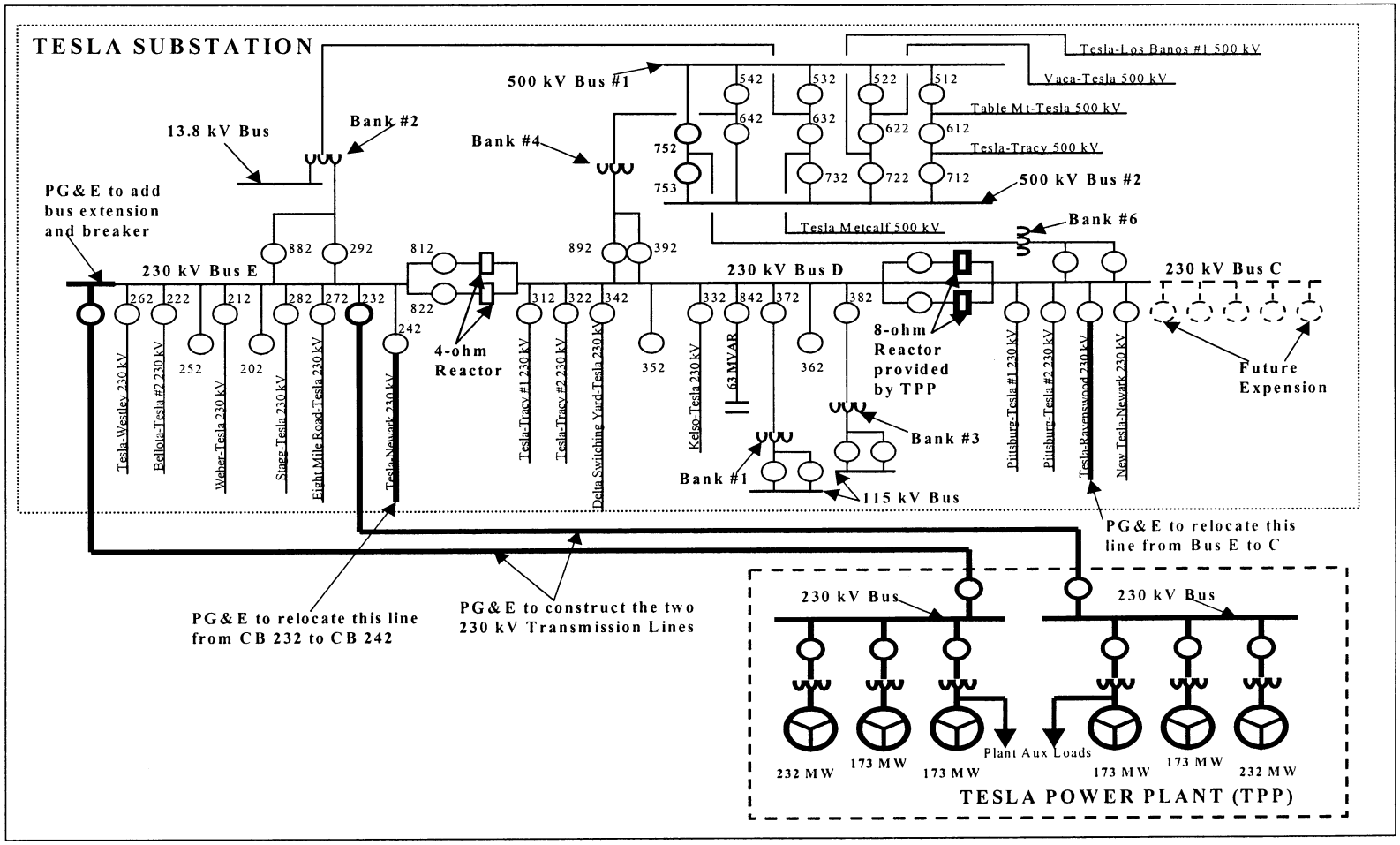Figure 3.6-3 Transmission Line Interconnection - Conceptual One-Line Diagram