In Response to Data Adequacy Review

of the

Application for Certification

for the

GWF Energy LLC Tracy Combined Cycle Power Plant (GWF Tracy)

(08-AFC-7)

Submitted to the

California Energy Commission

Submitted by

GWF Energy LLC

September 2008

CH2MHILL
2485 Natomas Park Drive
Suite 600
Sacramento, CA 95833

Contents

Section **Page**

1.0 Introduction **1**

3.0 Transmission System Engineering **2**

5.1 Air Quality **6**

5.2 Biological Resources **9**

5.3 Cultural Resources **12**

5.8 Paleontological Resources **16**

5.12 Traffic and Transportation **18**

5.14 Water Resources **30**

Tables

BIO-1 Agency Contacts for Biological Resources
CR-1 GWF Tracy Cultural Resource Local Historical Societies Consultation Record
Trans-1 GWF Tracy Local Roadway Classification and Design Capacities
Trans-2 Current Daily Average and Peak Traffic Counts for West Schulte Road and Access Routes
Trans-3a GWF Tracy Existing Level of Service
Trans-3b GWF Tracy Future Level of Service
WR-1 San Joaquin County Storm Water and Drainage, Erosion, and Sedimentation Control Plan Contacts

Figures

TSE-1a GWF Tracy Revised One-line Drawings
TSE-1b GWF Tracy Revised One-line Drawings
TSE-1c GWF Tracy Revised One-line Drawings
5.3E Submitted Under Request for Confidentiality
5.3F Submitted Under Request for Confidentiality
PAL-1 Submitted Under Request for Confidentiality
PAL-2 Submitted Under Request for Confidentiality
Trans-1 Tracy Municipal Airport Influence Area
Trans-2 Local Transportation

Attachments

AQ-1 San Joaquin Valley Air Pollution Control District Completeness Letter
AQ-2 GWF Tracy Air Dispersion Modeling Protocol and Correspondence with CEC Staff

BIO-1	Records of Conversation
Traffic-1	FAA Form 7460-1
WR-1	Plain View Irrigation District Water Supply Will Server Letter
WR-2	GWF Energy LLC Contract with Clearwater Environmental Management, Inc. for Wastewater Disposal
WR-3	Copy of Chapter 9-1400 of the San Joaquin County Ordinance

1.0 Introduction

This supplement to the GWF Energy LLC Tracy Combined Cycle Power Plant (GWF Tracy) Application for Certification (AFC) (08-AFC-7) responds to comments the California Energy Commission (CEC) Staff have made as a result of their data adequacy review of the AFC. The intention of this supplement is to provide all additional information necessary for Staff to find that the AFC contains sufficient and adequate data to begin a power plant site certification proceeding under Title 20, California Code of Regulations and the Warren-Alquist Energy Resources Conservation and Development Act.

The format for this supplement follows the order of the AFC sections and provides additional information and responses to CEC information requests on Transmission System Engineering, Air Quality, Biological Resources, Cultural Resources, Paleontological Resources, Traffic and Transportation, Water Resources. Only sections for which CEC Staff posed requests or questions related to data adequacy are addressed in this supplement. If the response calls for additional appended material, it is included at the end of each subsection.

Each subsection contains data adequacy questions or information requests, with numbers and summary titles and, in brackets, the citation from Appendix B, Title 22, California Code of Regulations (*Regulations Pertaining to the Rules of Practice and Procedure and Power Plant Site Certification*) indicating a particular information requirement for the AFC. Each item follows with the CEC Staff comment on data adequacy for this item, under the heading "Information required for the AFC to conform with regulations" followed by the Applicant's response to the information requested.

3.0 Transmission System Engineering

Appendix B(b)(2)(C)

A detailed description of the design, construction, and operation of any electric transmission facilities, such as power lines, substations, switchyards, or other transmission equipment, which will be constructed or modified to transmit electrical power from the proposed power plant to the load centers to be served by the facility. Such description shall include the width of rights of way and the physical and electrical characteristics of electrical transmission facilities such as towers, conductors, and insulators.

Information required for the AFC to conform to the regulations:

a. Please resubmit Figure 2.1-4 for a complete electrical one-line diagram of the proposed GWF Tracy Combined Cycle Power Plant (GWF Tracy) project showing all equipment and outlet lines including the generator step-up transformer (GSU), 115 KV SF6 breaker and disconnect switches on the high side, the 115 KV short overhead line from the GSU high side breaker to the existing GWF Tracy 115 kV switchyard with their respective sizes and/or types for the equipment, overhead conductor and ratings.

Response—Revised Figure 2.1-4 is attached as Figure TSE-1a and shows showing all equipment and outlet lines including the generator step-up transformer (GSU), 115 KV SF6 breaker and disconnect switches on the high side, the 115 KV short overhead line from the GSU high side breaker to the existing GWF Tracy 115 kV switchyard with their respective sizes and/or types for the equipment, overhead conductor and ratings.

b. Please provide one-line electrical diagrams showing the pre and post-project existing GWF Tracy 115 kV switchyard with the existing generator units, the new 115 KV transmission line outlet to the proposed GWF Tracy project and the existing 115 KV interconnection tie line with changes if any, to the PG&E 115 kV Schulte switching station with the configurations for buses, breakers, disconnect switches, and the lines and their respective sizes and/or ratings.

Response—Attached is a one-line electrical diagrams, Figure TSE-1b, showing the pre and post-project existing GWF Tracy 115 kV switchyard with the existing generator units, the new 115 KV transmission line outlet to the proposed GWF Tracy project and the existing 115 KV interconnection tie line with changes if any, to the PG&E 115 kV Schulte switching station with the configurations for buses, breakers, disconnect switches, and the lines and their respective sizes and/or ratings.

c. Please provide a one-line electrical diagram showing the pre and post-project existing PG&E 115 kV Schulte switching station showing the existing 115 kV generator overhead tie line with changes if any, with the configurations for 115 kV buses, breakers and disconnect switches and their respective ratings including all transmission outlet lines with the changes.

Response—Attached is a one-line electrical diagrams, Figure TSE-1c, showing the pre and post-project existing PG&E 115 kV Schulte switching station showing the existing 115 kV generator overhead tie line with changes if any, with the configurations for 115 kV buses, breakers and disconnect switches and their respective ratings including all transmission outlet lines with the changes.

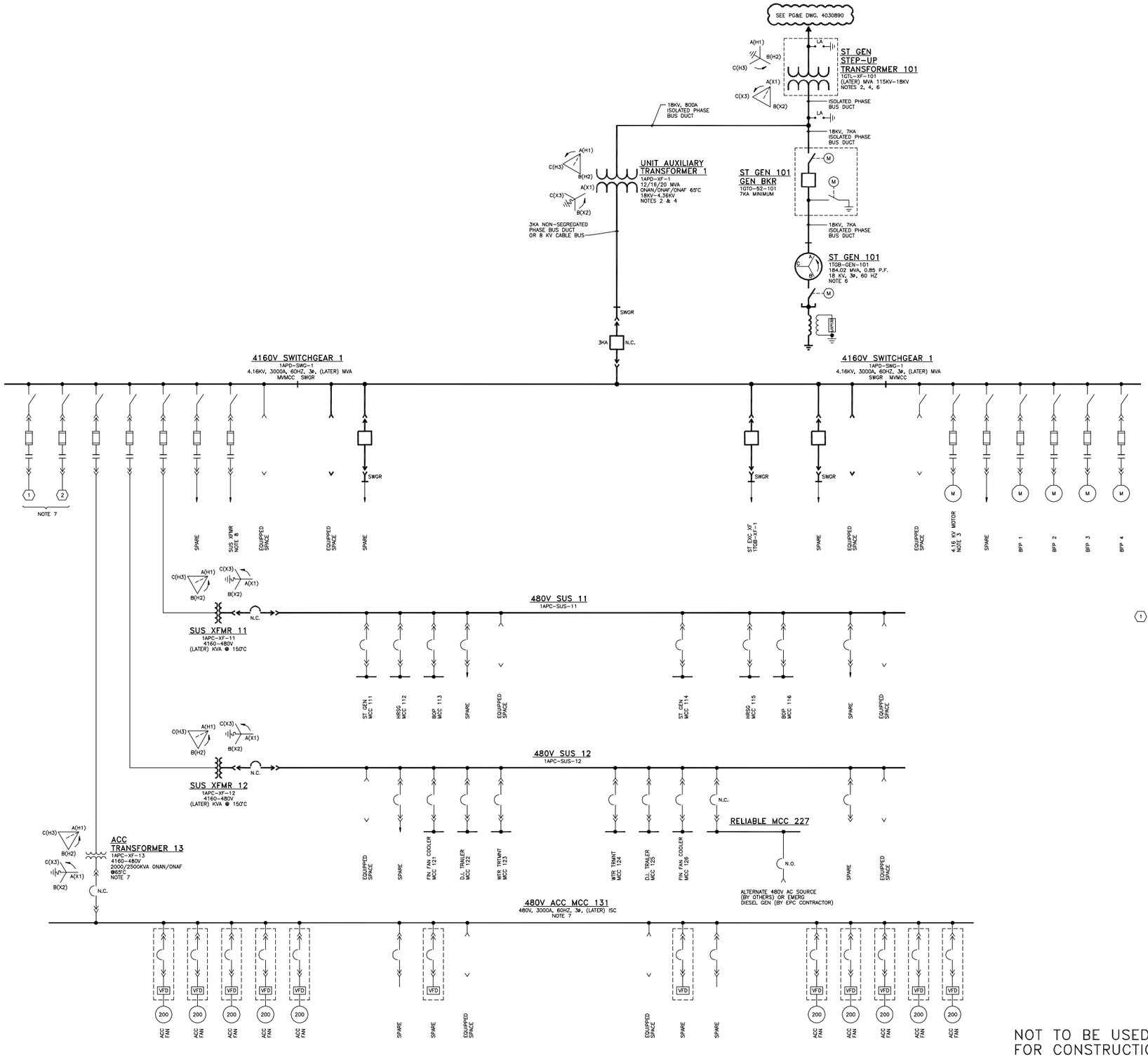

LEGEND:

- MEDIUM VOLTAGE MOTOR STARTER ASSEMBLY
- MEDIUM VOLTAGE METAL CLAD SWITCHGEAR BREAKER
- MOTOR OPERATED DISCONNECT SWITCH
- EQUIPPED SPACE FOR FUTURE ADDITION OF CIRCUIT BREAKER OR MOTOR STARTER
- MEDIUM OR LOW VOLTAGE MOTOR
- GROUNDING RESISTOR
- LOW VOLTAGE METAL ENCLOSED SWITCHGEAR BREAKER
- MOTOR OPERATED GROUNDING SWITCH
- NEUTRAL GROUNDING EQUIPMENT CUBICLE
- SURGE ARRESTOR

(1) (2) CIRCUIT SUPPLY FOR ACC TRANSFORMERS 14 & 15
4160-480V, 2000/2500KVA @65°C, NOTE 7

NOTES:

1. THE DESIGN SHOWN IS REPRESENTATIVE INFORMATION. THE NUMBER, SIZE AND NAMES OF INDIVIDUAL LOADS CONNECTED TO SWITCHGEAR, INCLUDING REQUIREMENTS FOR SPARES, WILL BE DETERMINED DURING DETAIL DESIGN. EQUIPMENT QUANTITY, INTERCONNECTIONS AND RATINGS WHERE INDICATED ARE PRELIMINARY AND SUBJECT TO CHANGE DURING DETAIL DESIGN AND SELECTION OF FINAL EQUIPMENT.
2. EXACT PHASE CONNECTIONS AND VECTOR ROTATION CONFIGURATION WILL BE DETERMINED BY EPC CONTRACTOR DURING DETAIL DESIGN. TRANSFORMER IMPEDANCE SHALL BE CALCULATED DURING DETAIL DESIGN BASED UPON SYSTEM AVAILABLE SHORT CIRCUIT CURRENT MOTOR STARTING VOLTAGE REQUIREMENTS AND EQUIPMENT FAULT CURRENT INTERRUPTION RATINGS.
3. QUANTITIES OF MEDIUM VOLTAGE MOTORS ALONG WITH NAMEPLATE HORSEPOWER RATINGS SHALL BE DETERMINED DURING DETAIL DESIGN.
4. TRANSFORMER MVA CAPACITY CALCULATIONS SHALL INCLUDE PROVISIONS FOR SITE AMBIENT CONDITIONS INCLUDING TEMPERATURE AND ALTITUDE.
5.
6. FINAL GENERATOR AND GENERATION TRANSFORMER MVA CAPACITY SHALL BE CALCULATED BY EPC CONTRACTOR BASED UPON ST UNIT OUTPUT AND UNIT AUXILIARY POWER CONSUMPTION.
7. POWER CIRCUIT AND DISTRIBUTION EQUIPMENT DEDICATED TO SUPPLY THE AIR COOLED CONDENSER (ACC). THE ACC SHALL BE SUPPLIED WITH THREE SINGLE-ENDED MCC'S EACH WITH GENERAL CONFIGURATION INDICATED BY ACC TRANSFORMER 13 CONNECTED TO MCC 131. FINAL NUMBER OF FANS CONNECTED TO SINGLE-ENDED MCC BUS SHALL BE DETERMINED BY EPC CONTRACTOR BASED ON FINAL DESIGN AND EQUIPMENT PURCHASED.
8. QUANTITIES OF MEDIUM TO LOW VOLTAGE SUS TRANSFORMERS ALONG WITH KVA RATINGS SHALL BE DETERMINED DURING DETAIL DESIGN.

ONE-LINE ABBREVIATIONS

N.C.	NORMALLY CLOSED
N.O.	NORMALLY OPEN
ST	STEAM TURBINE
XFMR	TRANSFORMER
HRSG	HEAT RECOVERY STEAM GENERATOR
SWGR	4160 VOLT MEDIUM VOLTAGE SWITCHGEAR
SUS	480 VOLT LOW VOLTAGE SECONDARY UNIT SUBSTATION
CTG	COMBUSTION TURBINE GENERATOR
R	RESISTOR
MCC	480 VOLT MOTOR CONTROL CENTER
BOP	BALANCE OF PLANT
IPB	ISOLATED PHASE BUS
N.J.S	NOT IN SCOPE
EXC	EXCITER
MVMCC	MEDIUM VOLTAGE MOTOR CONTROL CENTER
ACC	AIR COOLED CONDENSER
VFD	VARIABLE FREQUENCY DRIVE MODULE
ISC	SHORT CIRCUIT CURRENT INTERRUPTION RATING
GEN	GENERATOR
BFP	BOILER FEED PUMP

NOT TO BE USED FOR CONSTRUCTION

FIGURE TSE-1A
GWF TRACY REVISED ONE-LINE DRAWINGS
GWF TRACY COMBINED CYCLE POWER PLANT PROJECT
SAN JOAQUIN COUNTY, CA

CH2MHILL

Source: Black & Veatch, Co., Drawing 160129-DE-E1001C

EY052008002SAC Figure_TSE-1A.ai 09/05/2008 tdaus

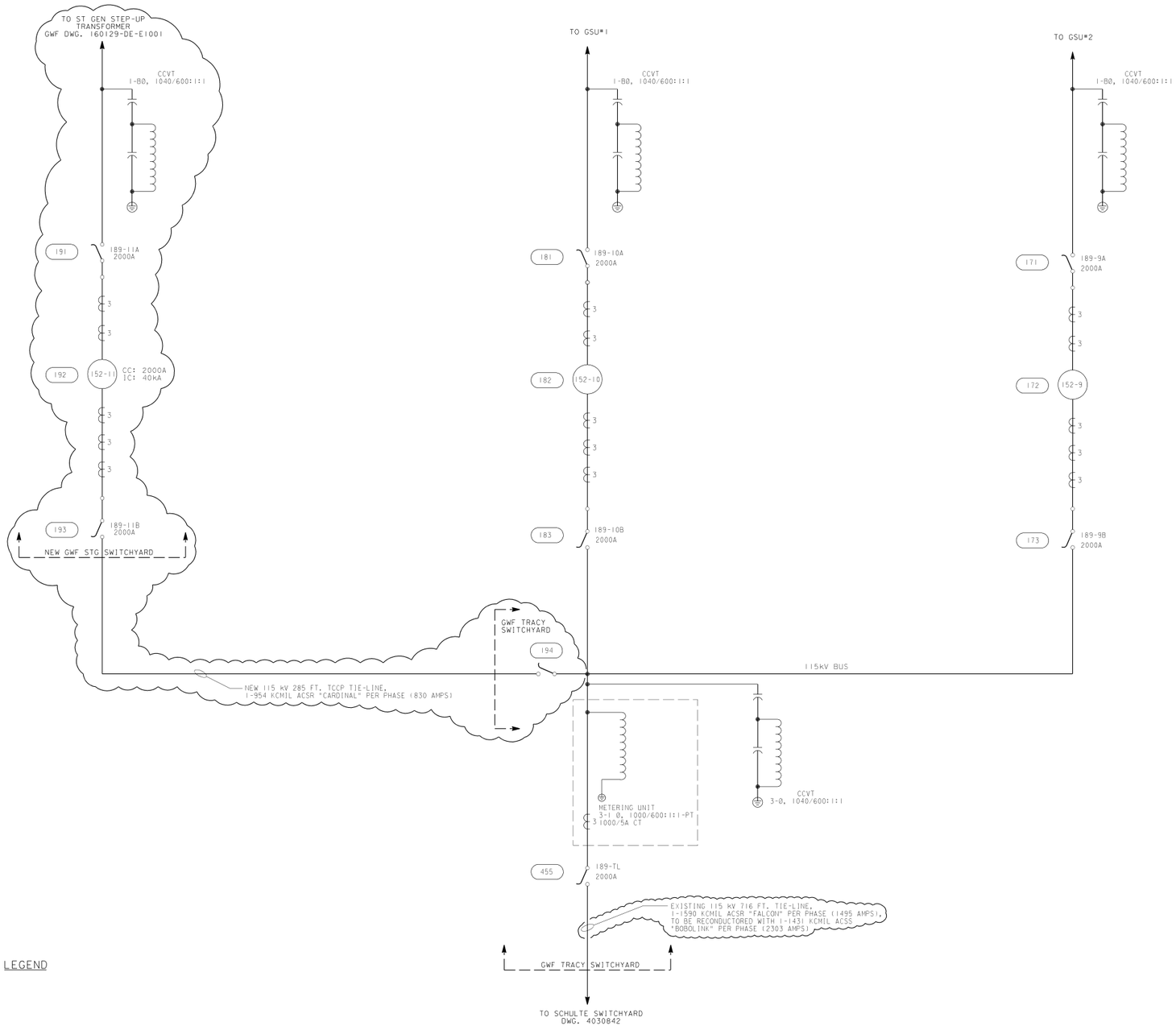

LEGEND

REFERENCE	DWG NO.
GWF TRACY PEAKER SWITCHING STATION ULTIMATE PLAN	4031005
115kV SINGLE LINE METER & RELAY DIAGRAM	4030891

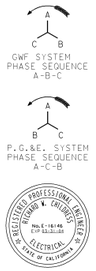

FIGURE TSE-1B
GWF TRACY REVISED ONE-LINE DRAWINGS
GWF TRACY COMBINED CYCLE POWER PLANT PROJECT
SAN JOAQUIN COUNTY, CA

CH2MHILL

Source: Black & Veatch, Co., Sheet 4030690A

EY052008002SAC Figure_TSE-1B.ai 09/05/2008 tdaus

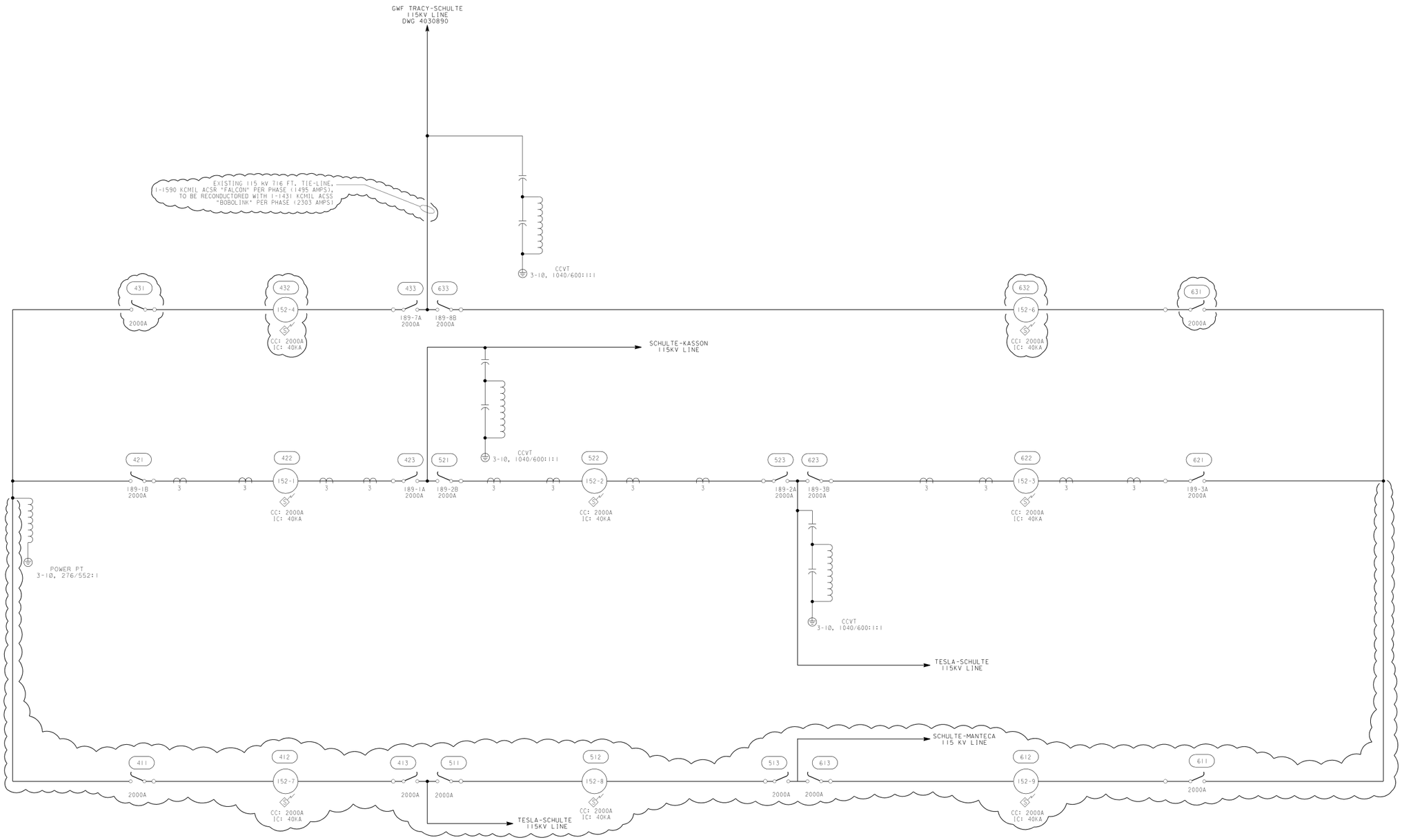

LEGEND

S - SCADA CONTROLLED EQUIPMENT

REFERENCES	DWG NO.
SINGLE LINE METER AND RELAY DIAGRAM	4030843
115KV SWITCHYARD ELECTRICAL PLAN	4031008

A C B
GWF SYSTEM
PHASE SEQUENCE
A-B-C

A B C
P.G.&E. SYSTEM
PHASE SEQUENCE
A-C-B

REGISTERED PROFESSIONAL ENGINEER
STANLEY K. CHRISTY
NO. E-16146
EXP. 6/30/2010
ELECTRICAL
STATE OF CALIFORNIA

FIGURE TSE-1C
GWF TRACY REVISED
ONE-LINE DRAWINGS
GWF TRACY COMBINED CYCLE
POWER PLANT PROJECT
SAN JOAQUIN COUNTY, CA

CH2MHILL

Source: Black & Veatch, Co., Sheet 4030842A

EY052008002SAC Figure_TSE-1C.ai 09/05/2008 tdaus

5.1 Air Quality

Appendix B(g)(A)

1. The information necessary for the air pollution control district where the project is located to complete a Determination of Compliance

Information required for the AFC to conform to the regulations:

a. Letter of completeness from San Joaquin Valley Air Pollution Control District. District application forms were dated June 26, 2008. SJVAPCD Rule 2201, Section 5.8.3 requires the District to notify the CEC of completeness within 20 days of receipt of the AFC.

Response – The San Joaquin Valley Air Pollution Control District issued a completeness letter on August 22, 2008. The completeness letter is provided as Attachment AQ-1.

Appendix B(g)(8)(H)

One year of meteorological data collected from either the Federal Aviation Administration Class 1 station nearest to the project or from the project site, or meteorological data approved by the California Air Resources Board or the local air pollution control district.

Information required for the AFC to conform to the regulations:

Air Dispersion Modeling Protocol that demonstrates that one year of data from Modesto has been approved by the local air district, given that four years are available on air district website.

Response— A copy of the GWF Tracy Air Dispersion Modeling Protocol and subsequent correspondences with staff at the California Energy Commission are presented in Attachment AQ-2.

Appendix B (g)(8)(I)(iii)

A protocol for a cumulative air quality modeling impacts analysis of the project's typical operating mode in combination with other stationary emissions sources within a six mile radius which have received construction permits but are not yet operational, or are in the permitting process. The cumulative inert pollutant impact analysis should assess whether estimated emissions concentrations will cause or contribute to a violation of any ambient air quality standard; and...

Information required for the AFC to conform to the regulations:

Air Dispersion Modeling Protocol that the applicant proposes to use for cumulative modeling.

Response— A copy of the GWF Tracy Air Dispersion Modeling Protocol, including a protocol for performing the cumulative air quality impact analysis is presented in Attachment AQ-2.

Attachment AQ-1

San Joaquin Valley Air Pollution Control District Completeness Letter Dated August 22, 2008

San Joaquin Valley
AIR POLLUTION CONTROL DISTRICT

AUG 2 2 2008

Mark Kehoe
GWF Energy, LLC
4300 Railroad Ave
Pittsburg, CA 94565

Re: Notice of Receipt of Complete Applications
Project Number: N-1083212

Dear Mr. Kehoe:

The San Joaquin Valley Air Pollution Control District (District) has received your Authority to Construct applications for the modification of an existing simple-cycle power plant to convert the plant into a combined-cycle power plant, to install an auxiliary boiler, and to install a diesel-fired emergency engine powering a fire pump, at 14950 West Schulte Road in Tracy, CA. Based on our preliminary review, the applications appear to be complete. This means that your applications contain sufficient information to proceed with our analysis. However, during processing of your applications, the District may request additional information to clarify, correct, or otherwise supplement, the information on file.

Per your request, the Authorities to Construct will be issued with a Certificate of Conformity (COC). Your project will therefore go for EPA Review per District Rule 2520 for a 45-day period at the conclusion of our analysis, prior to the issuance of the final Authority to Construct.

We will begin processing your applications as soon as possible. In general, complete applications are processed on a first-come first-served basis.

It is estimated that the project analysis process will take 116.5 hours, and you will be charged at the weighted hourly labor rate in accordance with District Rule 3010. This estimate includes the following major processing steps: Determining Completeness (16.5 hours), Engineering Evaluation (45 hours), BACT Analysis (25 hours), Health Risk Assessment (10 hours), CEQA Analysis (10 hours) and Permit Preparation (10 hours). The current weighted labor rate is $90.00 per hour, but please note that this fee is revised annually to reflect actual costs and therefore may change. No payment is due at this time; an invoice will be sent to you upon completion of this project.

Seyed Sadredin
Executive Director/Air Pollution Control Officer

Northern Region
4800 Enterprise Way
Modesto, CA 95356-8718
Tel: (209) 557-6400 FAX: (209) 557-6475

Central Region (Main Office)
1990 E. Gettysburg Avenue
Fresno, CA 93726-0244
Tel: (559) 230-6000 FAX: (559) 230-6061
www.valleyair.org

Southern Region
2700 M Street, Suite 275
Bakersfield, CA 93301-2373
Tel: (661) 326-6900 FAX: (661) 326-6985

Printed on recycled paper

Please note that this letter is not a permit and does not authorize you to proceed with your project. Final approval, if appropriate, will be in the form of an Authority to Construct permits after application processing is complete. If you have any questions, please contact Mr. Jim Swaney at (559) 230-5900.

Sincerely,

David Warner
Director of Permit Services

Jim Swaney, P.E.
Permit Services Manager
DW:jh

Cc: David A. Stein, P.E.
CH2M HILL
155 Grand Avenue, Suite 1000
Oakland, CA 94612

Christopher Meyer
California Energy Commission
1516 Ninth Street, MS-15
Sacramento, CA 95814-5512

Attachment AQ-2

GWF Tracy Air Dispersion Modeling Protocol and Correspondence with CEC Staff

Final

GWF Tracy Project Dispersion Modeling Protocol

Prepared for

GWF Energy LLC

February 2008

CH2MHILL
2485 Natomas Park Drive, Suite 600
Sacramento, CA 95833

Table of Contents

Table of Contents **1**

1.0 Introduction **2**

2.0 Methodology for Estimating Project Related Emissions **3**
2.1 Construction *3*
2.2 Commissioning *3*
2.3 Operation *4*

3.0 Air Quality Impact Analysis **4**
3.1 Model Selection *4*
3.2 Model Settings *5*
3.3 Meteorological Data *5*
3.4 Background Data *5*
3.5 Receptors *6*
3.6 Evaluation of Impacts *6*

4.0 Air Toxics **7**
4.1 Model Selection *8*
4.2 Evaluation of Impacts *8*

5.0 Cumulative Impacts **9**

1.0 Introduction

GWF Energy LLC (GWF) currently operates a 169-megawatt (MW) simple-cycle power plant, the Tracy Peaker Plant (TPP) on a thirteen acre, fenced site within a 40-acre parcel west of Tracy, CA, in an unincorporated portion of San Joaquin County. The two simple cycle GE Model PG7121(EA) combustion turbine generators (CTGs) were permitted through the California Energy Commission (CEC) Application for Certification (AFC) licensing process and the San Joaquin Valley Air Pollution Control District (SJVAPCD) New Source Review (NSR) permitting process in 2001 and have been operational since 2003. GWF is now proposing to increase the size of the facility a nominal 145 MW by adding a heat recovery steam generator (HRSG) to each existing CTG and directing the reclaimed process steam to a new 145 MW steam turbine generator (STG), GWF Tracy.

Construction would consist of removing the two existing oxidation catalyst and SCR systems and the installation of the new equipment. The off-site linears associated with the existing Tracy facility will not be modified as part of the proposed project. Therefore, air quality impacts will be evaluated for on-site construction activities only.

Natural gas will be the only fuel for the turbines. The turbines will use advanced combustion controls, combined with selective catalytic reduction (SCR), to limit emissions of nitrogen oxides (NOx) to 2 parts per million by volume (ppmv), while emissions of carbon dioxide (CO) will be limited to 3 ppmv and volatile organic carbon (VOC) to 2 ppmv through the use of the advanced combustion controls, combined with the use of an oxidation catalyst. Emissions of particulate matter less than 10 micron (PM_{10}) and sulfur dioxide (SO_2) will be kept to a minimum through the exclusive use of natural gas and the oxidation catalyst system. The project would also include the addition of an air cooled (dry) condenser system for system heat rejection, a new 85 MMBtu/hr capacity natural gas fired auxiliary boiler equipped with ultra low NOx burners, and a new 300 horsepower diesel-fired emergency firewater pump. Emissions of NOx, sulfur oxide (SOx), CO, PM_{10}, and particulate matter less than 2.5 micron ($PM_{2.5}$) emissions from the two combustion turbine generators, auxiliary boiler, and diesel-fired emergency equipment will be included in the dispersion modeling analysis.

With the addition of the steam turbine generator, the proposed facility would become one of the 28 Prevention of Significant Deterioration (PSD) major source categories (40 CFR 52.21(b)(1)(i)). However, the PTE for the proposed power plant (which includes the existing CTG units) is expected to be less than 100 tons per year for each of the PSD regulated pollutants. Therefore, the project would not be considered a major stationary source in accordance with PSD regulations.

However, in accordance with the NSR requirements outlined in SJVAPCD Regulation 2201, modeling will be conducted to demonstrate that the project would neither cause a new violation of a state or federal ambient air quality standard nor make an existing violation significantly worse for NO_2, CO, PM_{10}, $PM_{2.5}$, and SO_2. Therefore, GWF Tracy intends to submit an air quality impact analyses to both the SJVAPCD and the CEC. In addition, a cumulative impacts analysis will be performed. The project will be required to evaluate construction-based impacts per the CEC regulations. This document presents the

methodology proposed for evaluating the potential air quality impacts related to the construction, commissioning, and operation of the proposed facility.

2.0 Methodology for Estimating Project Related Emissions

2.1 Construction

The construction lay down and parking area is expected to be similar to the site used during the construction of the CTG's. Approximately 13 acres of the 40-acre parcel would be used and construction activities are expected to occur for 20 months. Construction of off-site linear facilities will not be required as part of the project. However, one new electrical transmission tower would be placed adjacent to the existing site to facilitate the electrical interconnection to the adjacent transmission lines and the relocation of the existing storm water retention basin will add approximately 3.3 acres to the existing site. Assessment of this impact will be captured as part of the on-site construction activities. Therefore, an assessment of off-site construction impacts will not be required.

On-site project emissions will be divided into three categories: onsite exhaust, fugitive dust from vehicle and construction equipment, and windblown fugitive dust. The following criteria pollutant emissions will be calculated: NOx, SOx, VOC, CO, PM_{10}, and $PM_{2.5}$. Fugitive dust and construction equipment exhaust emissions will be estimated using URBEMIS2002 (version 8.7.0) emission factors. Onroad exhaust emissions will be estimated using EMFAC2007 (version 2.3) emission factors.

AERMOD will be used to evaluate the construction impacts. The construction site will be represented as an area source in the modeling analysis. For exhaust emissions, a plume height of 4.6 meters (15 feet) will be used. For wind blown and fugitive dust emissions, a release height of 2 meters will be used. A more detailed AERMOD modeling approach is presented in Section 3.0.

2.2 Commissioning

During the commissioning phase, the duct burners and STG will be initially operated at various load rates without the benefit of the emission control systems to ensure proper operation of the equipment. However, it should be noted that additional commissioning of the existing CTGs will not be required. Therefore, the duration of the commissioning phase and the emissions for the Tracy facility will likely be lower than a typical combined cycle installation. Emissions of NOx, SOx, CO, VOC, PM_{10}, and $PM_{2.5}$ emitted during the commissioning period will be estimated based on the commissioning schedule and turbine performance data provided by the vendor.

AERMOD will be used to model the ambient air quality impacts. The HRSG stacks will be modeled as point sources. Exhaust parameters will be based on information provided by the vendor for each commissioning phase. Only maximum hourly impacts for NOx and CO will be modeled for each commissioning phase. Emission rates of PM_{10}, $PM_{2.5}$ and SOx are expected to be equal to or lower than normal operating rates due to reduced loads during commissioning. A more detailed AERMOD modeling approach is presented in Section 3.0.

2.3 Operation

Emissions of NOx, SOx, CO, VOC, PM_{10}, and $PM_{2.5}$ to the atmosphere from the proposed facility will occur from combustion of natural gas in each of the identical combustion turbines. Emission rates will be calculated based on vendor data and additional conservative assumptions of turbine performance. Turbine emissions and stack parameters, such as flow rate and exit temperature, exhibit some variation with ambient temperature and operating load. Therefore, in order to evaluate the worst-case air quality impacts, dispersion modeling will be conducted at base, 75, and 60 percent loads at the design-high, low, and weighted annual average ambient temperatures. In addition to the load/temperature scenarios mentioned above, dispersion modeling will also be conducted for startup and shutdown events.

Emissions of NOx, CO, PM_{10}, $PM_{2.5}$, and SOx from the auxiliary boiler and the new diesel fired emergency fire pump will also be included in the analysis. Emissions for the auxiliary boiler will be calculated based on manufacturer data and mass balance calculations. The existing diesel fired backup generator will also be included in the modeling analysis to evaluate short term impacts. Emission rates for the diesel fired ICE will be based on manufacturer data.

AERMOD will be used to model the ambient air quality impacts. The HRSG stacks, auxiliary boiler, and diesel-fired ICEs will be modeled as point sources. Exhaust parameters will be based on information provided by the vendor. A more detailed AERMOD modeling approach is presented in Section 3.0.

3.0 Air Quality Impact Analysis

3.1 Model Selection

Several EPA approved dispersion models will be used to quantify the potential criteria pollutant air quality impacts resulting from the construction, commissioning, and normal operation of the proposed project. The models include the following:

- BPIP-Prime (Building Profile Input Program – Plume Rise Model Enhancement, dated 04274),
- AERMOD (AERMIC[1] Modeling System, Version 07026),
- AERMAP (AERMIC Mapping System, Version 06341), and
- SCREEN3 (Version dated 96043).

AERMOD is a steady-state, multiple-source, dispersion model which also incorporates the BPIP-PRIME algorithm for the simulation of aerodynamic downwash induced by buildings. AERMAP will be used to calculate the receptor elevations and the controlling hill heights.

If hourly NOx concentrations need to be examined in a more refined manner, the EPA's AERMOD-OLM option will be used to calculate the NO_2 concentration based upon the ozone limiting method (OLM). The 2003 SJVAPCD Tracy-Patterson Street ozone data file prepared by the SJVAPCD for use with AERMOD-OLM will be used.

[1] American Meteorological Society/Environmental Protection Agency Model Improvement Committee

The effects of fumigation on the maximum modeled impacts will be evaluated using the EPA SCREEN3 model (Version 96043). For this evaluation, only impacts from the turbine stack will be evaluated.

Evaluation of Visibility Impacts to Class I areas would not be required for this analysis since the facility emissions are expected to be below the PSD thresholds.

3.2 Model Settings

The technical options selected for the AERMOD model include:

- Regulatory default control options
- Rural dispersion mode (land use within 3-km of the facility is primarily classified as rural based on the Auer Method, therefore, AERMOD will be run in the rural dispersion mode)
- Receptor elevations and controlling hill heights will be obtained from AERMAP output.

3.3 Meteorological Data

The CEC requires a minimum of one year of meteorological data approved by the California Air Resources Board (CARB) or the local air pollution control district to be used in the air dispersion modeling analysis. The SJVAPCD recommended the use of 2003 Modesto AERMET data set for the modeling effort. The SJVAPCD's rationale was that the 2003 AERMET data set would likely provide the most conservative estimate of short term impacts. (personal communication with Leland Villalvazo, SJVAPCD, February 7, 2008).

3.4 Background Data

According to Appendix B (g)(8)(G) of the CEC data adequacy checklist, a summary of the previous 3 years of ambient background concentrations of all criteria pollutants from the closest certified CARB monitoring stations is required. The closest monitoring sites for nitrogen dioxide (NO_2) and ozone (O_3) are located in Tracy. However, the monitoring station in the vicinity of the project (i.e., the Tracy 24371 Patterson Road monitoring station) was relocated in 2005 to the Tracy Airport monitoring location. The Tracy Airport monitoring station was installed January 11, 2005 (http://www.arb.ca.gov/qaweb). Therefore, a complete year of data for 2005 is not available. Based on a conversation with the SJVAPCD, it was determined the nearest NO_2 and O_3 monitoring station for 2005 would have been in Stockton, which may not be representative of the ambient background concentrations in the Tracy vicinity. Therefore, in order to obtain the ambient background data for NO_2 and O_3, the data for 2003, 2004, and 2006 will be used (personal communication with Leland Villalvazo, SJVAPCD, February 7, 2008). For PM_{10}, $PM_{2.5}$, and CO the only monitoring sites located in San Joaquin County are located in Stockton, with the exception of a PM_{10} monitor installed at the Tracy Airport monitoring station in 2006. Therefore, measurements of PM_{10}, $PM_{2.5}$, and CO from the Stockton monitoring stations from 2004 – 2006 and the 2006 PM_{10} and $PM_{2.5}$ data for the Tracy Airport will be used to estimate the existing background concentrations in the vicinity of the project. Sulfur dioxide (SO_2) concentrations have not been measured in the San Joaquin County between 2004 and 2006. Therefore, measurements from Bethel Island (Contra Costa County) from 2004 – 2006 will be used to estimate the existing SO_2 background concentrations in the vicinity of the project.

The Air Resources Board (ARB) ambient air quality data summaries were used as the primary source of data and the EPA AIRS database summaries were used when data were unavailable in the ARB summaries. The maximum concentrations reported in the permit application will be combined with the modeled concentrations and used for comparison to the ambient air quality standards. It should also be noted that the current ambient background concentrations would include the existing TPP since the peaker units have been operational since 2003

3.5 Receptors

Receptor and source base elevations will be determined from U.S. Geological Survey (USGS) Digital Elevation Model (DEM) data using the 7½-minute format (i.e., 30-meter spacing between grid nodes). All coordinates will be referenced to Universal Transverse Mercator (UTM) North American Datum 1927 (NAD27), Zone 10. Every effort will be made to maintain receptor spacing across DEM file boundaries.

Cartesian coordinate receptor grids will be used to provide adequate spatial coverage surrounding the project area for assessing ground-level pollution concentrations, to identify the extent of significant impacts, and to identify maximum impact locations. In order to minimize model run times and control file size, a coarse and fine grid approach will be used for the impact analysis. The following coarse grid will be used to identify the areas of maximum concentration:

- fence line receptors will be spaced at 25-meter intervals
- 100-meter spacing from property boundary to 1 km from the origin
- 500-meter spacing from beyond 1 km to 10 km from the origin
- Concentrations within the facility fence line will not be calculated.

The following refined grid will be used to evaluate areas of maximum impact:

- 25-meter spacing surrounding areas of maximum impact within 1 km of the facility extending 100-meters from the maximum location.
- 50-meter spacing surrounding areas of maximum impact beyond 1 km of the facility extending 500-meters from the maximum location.

3.6 Evaluation of Impacts

Construction Impact Assessment

Concentrations of NO_2, CO, PM_{10}, $PM_{2.5}$, and SOx from construction activities related to the project will be combined with the ambient background concentrations and compared to the ambient air quality standards.

Commissioning Impact Assessment

The short term concentrations of NO_2 and CO (i.e., the 1 and 8 impacts) from the commissioning phase of the project will be combined with the ambient background concentrations and compared to the short term ambient air quality standards. Predicted concentrations of PM_{10}, $PM_{2.5}$ and SOx are expected to be equal to or lower than normal operating rates due to reduced loads during commissioning. Because the commissioning

phase is only expected to occur over 3 months, annual impacts will not be evaluated for the commissioning phase of the project.

Operational Impact Assessment

A screening operational impact assessment will be conducted to determine the turbine operating scenario with the highest short and long term off-site impacts. Impacts for NO_2, SO_2, CO, PM_{10}, and $PM_{2.5}$ will be modeled using a unit emission rate (i.e., 1.0 gram/sec) and the coarse receptor grid described in Section 3.0. The modeled concentrations will be scaled linearly using the calculated pollutant emission rates to determine the point of maximum impacts. A preliminary impact assessment for the auxiliary boiler, emergency fire pump, and backup generator will be conducted using the calculated emission rates and coarse receptor grid. The modeled concentrations from the auxiliary equipment at each receptor will be added to the modeled concentrations at each receptor for each turbine scenario. Adding the maximum coarse grid modeled concentrations from the auxiliary equipment to the modeled turbine concentrations will conservatively identify potential areas of maximum impact that will need to be included in the refined operational impact assessment while eliminating the need to run all turbine scenarios as part of the refined modeling assessment.

Based on the outcome of the screening impact assessment, emission rates for the turbine scenario with the highest impact will be combined with the auxiliary equipment emission rates and modeled using the refined receptor grids. The maximum modeled concentrations from the refined analysis will then be added to representative background concentrations, and the results compared to the state and federal ambient air quality standards for SO_2, NO_2, CO, PM_{10} and $PM_{2.5}$. The highest ambient concentration from the most recent three years of data will be used as the background concentration.

Fumigation Impact Assessment

Fumigation can occur during the breakup of the nocturnal radiation inversion by solar warming of the ground surface. This condition is short-lived, therefore it will be compared to the 1-hour standards.

4.0 Air Toxics

SJVAPCD sets forth the health risk threshold for new and modified permit units. A human health risk assessment (HRA) will be performed to evaluate the potential cancer, chronic, and acute health impacts related to the proposed project. The HRA will follow the latest version of the *Air Toxics Hot Spots Program Risk Assessment Guidelines* (Office of Environmental Health Hazard Assessment [OEHHA], August 2003), and the USEPA *Guideline on Air Quality Models* (40 CFR, Part 51, Appendix W, November 9, 2005). In addition, for predicted cancer risks where the inhalation pathway is the dominant exposure pathway for cancer risks, the Derived (Adjusted) Method outlined in the ARB *Recommended Interim Risk Management Policy for Inhalation-based Residential Cancer Risk*, 2003, will be used for the cancer risk evaluation.

Toxic air contaminants (TAC) from the turbines, auxiliary boiler, the new diesel-fired emergency fire pump, and the existing diesel fired emergency generator will be included in the HRA. Turbine emissions will be estimated assuming that both turbines would operate simultaneously under normal load conditions. For maximum hourly emissions, the

maximum natural gas consumption rate per turbine will be used. For annual emissions, the annual average natural gas consumption rate per turbine will be used, assuming that the turbines would operate 8,000 hours per year. Routine testing emissions from the emergency generator assumes operation for 15 minutes once per week.

TAC emissions will be estimated based on vendor data. Ammonia emissions associated with potential ammonia slip from the SCR system will be calculated based on a permit limit maximum of 10 parts per million by volume, dry (ppmvd) at 15 percent oxygen. Diesel particulate emissions from the emergency generator were calculated from manufacturer's data.

Because the construction phase is only expected to occur for 20 months, an assessment of the potential health impacts from toxic air contaminants from construction activities will not be required by the SJVAPCD (personal communication with Leland Villalvazo, SJVAPCD, February 7, 2008).

4.1 Model Selection

The HRA modeling for the normal project operations will be conducted using the ARB *Hotspots Analysis Reporting Program* (HARP, Version 1.3, October 2006), along with the ARB HARP file converter (version beta 2) (http://www.arb.ca.gov/toxics/harp/downloads.htm), and AERMOD. The HARP file converter converts the AERMOD output files to be compatible with the HARP modeling system. The AERMOD modeling approach, such as default options, source parameters, meteorological data, receptor spacing, and terrain data, will be similar to the criteria pollutant modeling analysis. The receptor grid will also include sensitive receptors as defined by SJVAPCD and CEC Regulations (Appendix B (g) (9) (E)(i)). A unit emission rate (i.e., 1 gram/sec) will be used to model each source, as outlined in the HARP converter program manual.

4.2 Evaluation of Impacts

Cancer risks will be evaluated based on the annual TAC ground-level concentrations, inhalation cancer potency, oral slope factor, frequency and duration of exposure at the receptor, and breathing rate of the exposed persons. Cancer risks will be estimated using a conservative assumption of 70-year continuous exposure duration for residential receptors and a 40-year, 5-day week, 8-hrs-per-day exposure duration for commercial/industrial receptors. In addition, for predicted cancer risks where the inhalation pathway is the dominant pathway of cancer risks, the Derived (Adjusted) Method in HARP will be used for the cancer risk evaluation, based on the *Recommended Interim Risk Management Policy for Inhalation-Based Residential Cancer Risk* (CARB, 2003). To assess chronic and acute non-cancer exposures, annual and 1-hour TAC ground-level concentrations will be compared with the Reference Exposure Levels (RELs) developed by OEHHA to obtain a chronic or acute hazard index.

In addition to inhalation exposure, the HRA will assess potential health impacts related to exposure from home grown produce, dermal absorption, soil ingestion, and mother's milk, as required by OEHHA guidelines (OEHHA, 2003). The inhalation cancer potency, oral slope factor values, and RELs used to characterize health risks associated with the modeled

impacts will be obtained from the most recent version of the *Consolidated Table of OEHHA/ARB Approved Risk Assessment Health Values.*

The modeled health risk values will be compared to the following thresholds:

- Incremental increase in cancer risk of 1 in one million individuals
- Chronic hazard index of 1.0
- Acute hazard index of 1.0

Predicted cancer risk and hazard indices less than the above thresholds would be considered an acceptable increase in risk associated with the proposed project.

5.0 Cumulative Impacts

A cumulative impact analysis will be performed for the project's typical operating mode in combination with other stationary emission sources within a 6-mile radius, which:

- have received construction permits but are not yet operational,
- are in the permit process, or
- are in the CEQA process.

The cumulative impact analysis will assess whether estimated emission concentrations will cause or contribute to a violation of any ambient air quality standards.

The sources to be included in the cumulative impact analysis will be determined by consulting the SJVAPCD and the CEC. The applicant will work with the SJVAPCD and CEC staffs to identify those new air pollution sources within the 6-mile area surrounding GWF Tracy to be included in the cumulative impact analysis. Below is a list of UTM coordinates (NAD 27, Zone 10) for the combustion equipment at the project site.

Unit 1 HRSG stack - North 4,174,817 (meters) East 632,998 (meters)

Unit 2 HRSG stack - North 4,174,788 (meters) East 633,039 (meters)

Auxiliary Boiler Stack - North 4,174,802 (meters) East 632,966 (meters)

Diesel Driven Fire Pump - North 4,174,844 (meters) East 632,873 (meters)

STAFF COMMENTS REGARDING THE GWF TRACY PROJECT AIR DISPERSION MODELING PROTOCOL

Technical Staff: Joe Loyer

Staff has reviewed the air dispersion modeling protocol for the GWF Tracy Project submitted February 2008. Staff finds that, while the protocol lacks some specificity, it is substantially complete and will likely result in a reasonable representation of the probable air quality impacts of the proposed amendment to the GWF Tracy Project. Staff offers the following comments as clarifications and recommendations.

1. Page 7; the applicant proposes to use a screening level modeling analysis but does not indicate what type of model will be selected. Please clarify which model will be used for this level of analysis.

2. Page 7; the applicant proposes to perform a fumigation impact assessment, but does not state the actual pollutant emissions that will be modeled. Staff recommends that the applicant model NOx, CO and SOx emissions for the 1-hour ambient air quality standards.

From: Salamy, Jerry/SAC
Sent: Monday, March 10, 2008 3:35 PM
To: 'Keith Golden'
Cc: McGregor, Keith/SAC; Stein, David/BAO
Subject: RE: Tracy modeling protocol

Keith,

Thanks for your quick review. Here is the clarifying information you requested.

1. Page 7; the applicant proposes to use a screening level modeling analysis but does not indicate what type of model will be selected. Please clarify which model will be used for this level of analysis.

Response: The screening analysis will be performed using AERMOD (same version as indicated in the modeling protocol).

2. Page 7; the applicant proposes to perform a fumigation impact assessment, but does not state the actual pollutant emissions that will be modeled. Staff recommends that the applicant model NOx, CO and SOx emissions for the 1-hour ambient air quality standards.

Response: The fumigation impact assessment will performed for NOx, CO, and SO2 to determine the maximum 1-hour concentration. The results of the fumigation impact assessment will be compared to either the AERMOD operational impact results or the AAQS (in cases where the fumigation impact assessment results produce a higher ground level impact than the AERMOD operational assessment).

We have not heard back from San Joaquin APCD but don't really expect to as we confirmed most of the modeling approach in advance of finalizing the protocol. I have a call into Leland Villalvazo to confirm and will forward any comments and responses to the CEC.

Thanks again.

Jerry Salamy
Senior Project Manager
CH2M HILL/Sacramento
Phone 916-286-0207
Fax 916-614-3407
Cell Phone 916-769-8919

From: Keith Golden [mailto:Kgolden@energy.state.ca.us]
Sent: Monday, March 10, 2008 3:11 PM
To: Salamy, Jerry/SAC
Subject: Tracy modeling protocol

Jerry,
Here are our simple clarifying points on your protocol. Not much to it. You could probably respond with an e-mail to me as what you intend to do. Did you get any feedback from the San Joaquin District on this protocol?

Keith

5.2 Biological Resources

Appendix B(g)(13)(A)(vi)

fish and wildlife species that have commercial and/or recreational value.

Information required for the AFC to conform to the regulations:

Please include a discussion of any such species in the project vicinity, potential impacts, and mitigation.

Response—No fish species occur on the project site or vicinity with commercial or recreational value. However, one game bird species, the mourning dove (*Zenaida macroura*), potentially occurs at the proposed site. This species has some recreational value to hunters, but has no important economic value. No species of economic importance occur in the GWF Tracy area.

Appendix B(g)(13)(D)(i)

Current biological resources surveys conducted using appropriate field survey protocols during the appropriate season(s). State and federal agencies with jurisdiction shall be consulted for field survey protocol guidance prior to surveys if a protocol exists;

Information required for the AFC to conform to the regulations:

Please contact the California Department of Fish and Game (CDFG) to determine whether a protocol-level burrowing owl survey is necessary for this project and submit a report of conversation.

a. Please contact the California Department of Fish and Game (CDFG) to determine whether a protocol-level burrowing owl survey is necessary for this project and submit a report of conversation.

Response—The CDFG has been contacted and a Records of Conversation are included in Attachment BIO-1. CH2M HILL's biologist discussed the project with the regional CDFG staff. The CDFG staff did not believe that protocol-level surveys were required for burrowing owl and that pre-construction surveys would suffice if construction is expected to occur during the spring. However, the unit biologist position for San Joaquin County has recently been filled and the CDFG staff biologist reserved the right to review the project with the unit biologist when he begins in mid-September. CH2M HILL's biologist will follow-up with the unit biologist in mid-September for his concurrence that no protocol-level surveys for burrowing owl are required.

b. Please ask CDFG to state which additional seasons, if any, are required for the above protocol-level survey, and submit a report of conversation.

Response—Please see the response above.

Appendix B(g) (13)(H)

Submit copies of any preliminary correspondence between the project applicant and state and federal resource agencies regarding whether federal or state permits from other agencies such as the U. S. Fish and Wildlife Service (USFWS), the National Marine Fisheries Service, the U.S. Army Corps of Engineers, the California Department of Fish and Game (CDFG), and the Regional Water Quality Control Board will be required for the proposed project.

Information required for the AFC to conform to the regulations:

Please contact the agencies in Table 5.2-6 and discuss potential biological resource concerns, impacts, mitigation, whether separate local, state, or federal permits will be required, and submit records of conversations.

Response—The CDFG and United States Fish and Wildlife Service have been contacted and the Records of Conversation are included in Attachment BIO-1.

Appendix B (i) (2)

The name, title, phone number, address (required), and email address (if known), of an official who was contacted within each agency, and also provide the name of the official who will serve as a contact person for Commission staff.

Information required for the AFC to conform to the regulations:

The contact information appears to be out of date; please update the table with the current, staff-level biologists in the project region for the U.S. Fish and Wildlife Service and CDFG (and county if needed).

Response—Table BIO-1 lists the updated contacts for the U.S. Fish and Wildlife Service and the California Department of Fish and Game.

TABLE BIO-1
Agency Contacts for Biological Resources

Issue	Agency	Contact
Section 7 or Section 10 of ESA prohibiting “take” of Federally listed plants and/or wildlife; issuance of USFWS Biological Opinion, letter of concurrence, or “no effects” determination.	U.S. Fish and Wildlife Service	Tim Kuhn 2800 Cottage Way, W-2605 Sacramento, CA 95825 (916) 414-6600 Tim_Kuhn@fws.gov
Protection of state listed plants and/or wildlife: issuance of letter of concurrence or “take” authorization under CESA; authorization of lake or streambed alteration under 1602 of the Fish and Game code.	California Department of Fish Game	Eric Kleinfelter 1701 Nimbus Road, Suite A Rancho Cordova, CA 95670 (916) 358-2900 ekleinfelter@dfg.ca.gov

Attachment BIO-1

Records of Conversation

CH2MHILL TELEPHONE CONVERSATION RECORD

Discussion with: Tim Kuhn/FWS

Phone No.: 916-414-6600 **Date:** September 3, 2008

With: John Cleckler **Time:** 11:35 PM

Message Taken By: John Cleckler

Subject: GWF Tracy Biological Resources – permitting/survey recommendations

I discussed survey/permitting requirements for the GWF TPP expansion project with Tim Kuhn of FWS in person. I provided a general overview of the project and species identified as potentially affected by the project: SJKF and migratory birds. I discussed the AFC and the proposed preconstruction survey methods for determining SJKF and BUOW use of the site.

Tim suggested that I send relevant project information with a request for concurrence to his branch chief, Susan Jones.

I will send Susan Jones the project description, summary of findings, and the figures from the biology section of the AFC. Susan will likely address the issue herself or delegated to a member of her staff, possibly Tim Kuhn, based on our previous discussion.

COPYRIGHT 2008 BY CH2M HILL, INC. • COMPANY CONFIDENTIAL

CH2MHILL TELEPHONE CONVERSATION RECORD

Call To: Josh Bush/CDFG

Phone No.: 916-358-1330 **Date:** September 3, 2008

Call From: Marjorie Eisert **Time:** 1:35 PM

Message Taken By: Marjorie Eisert

Subject: GWF Tracy Biological Resources – permitting/survey recommendations

I called CDFG to discuss survey/permitting requirements for the GWF TPP expansion project. I provided a general overview of the project and species identified as potentially affected by the project: SJKF and BUOW. I discussed the AFC and the proposed preconstruction survey methods for determining SJKF and BUOW use of the site.

Based on the initial information provided, implementation of preconstruction surveys for SJKF and BUOW use as well as nesting bird surveys if construction activities occur during spring seemed sufficient for the proposed project. However, Mr. Bush requested more detailed information (project description) and a map of the site to concur with our proposed methods. He also informed me that they recently filled the vacant San Joaquin County biologist position and that Eric Kleinfelder would be the biologist in charge of this project review.

I will send Mr. Bush the project description, summary of findings, and the figures from the biology section of the AFC (e-mail is jbush@dfg.ca.gov. He will start a file for the project that will be passed on to Mr. Kleinfelter when he assumes his position in a couple of weeks.

COPYRIGHT 2008 BY CH2M HILL, INC. • COMPANY CONFIDENTIAL

5.3 Cultural Resources

Appendix B(g)(2)(B)

The results of a literature search to identify cultural resources within an area not less than a 1-mile radius around the project site and not less that than one-quarter (0.25) mile on each side of the linear facilities. Identify any cultural resources listed pursuant to ordinance by a city or county, or recognized by any local historical or archaeological society or museum. Literature searches to identify the above cultural resources must be completed by, or under the direction of, individuals who meet the Secretary of the Interior's Professional Standards for the technical area addressed.

Copies of California Department of Parks and Recreation (DPR) 523 forms (Title 14 CCR §4853) shall be provided for all cultural resources (ethnographic, architectural, historical, and archaeological) identified in the literature search as being 45 years or older or of exceptional importance as defined in the National Register Bulletin Guidelines, (36CFR60.4(g)). A copy of the USGS 7.5' quadrangle map of the literature search area delineating the areas of all past surveys and noting the California Historical Resources Information System (CHRIS) identifying numbers shall be provided. Copies also shall be provided of all technical reports whose survey coverage is wholly or partly within .25 mile of the area surveyed for the project under Section (g)(2)(C), or which report on any archaeological excavations or architectural surveys within the literature search area

Information required for the AFC to conform to the regulations:

a. Please contact San Joaquin County to identify cultural resources listed per local ordinance that are located within a one-mile radius of the proposed plant site, and incorporate and provide the results in the technical report and the AFC.

Response— The Tracy Historical and Genealogical Society and San Joaquin County Historical Society and Museum were contacted by phone on August 22, 2008. The Tracy Historical and Genealogical Society does not maintain a list of historic places and suggested contacting the San Joaquin County Historical Society and Museum. The San Joaquin County Historical Society and Museum has not responded with any information to-date. San Joaquin County does not maintain separate listings of cultural resources and, therefore, cannot provide a list of resources within a 1-mile radius. The Applicant has provided a table documenting these contacts is attached as Table CR-1.

TABLE CR-1
GWF Tracy Cultural Resource Local Historical Societies Consultation Record

Organization	Date	Comments Summary
San Joaquin County Historical Society and Museum 11793 N. Micke Grove Road Lodi, Ca 95240 (209) 331-2055 Fax (209) 331-2057	8/22/08	Contacted and left a message but no response received to date.
Tracy Historical and Genealogical Society 1141 Adam Street Tracy, Ca 95376 (209) 832-1106	8/22/08	Spoke on the phone. The Tracy Historical and Genealogical Society does not maintain a list of historic places and suggested contacting the San Joaquin County Historical Society and Museum.
Kerry Sullivan, Director of Planning San Joaquin County Planning Department 1810 E. Hazelton Avenue Stockton, CA 95205 (209) 468-3140	8/21/08	Spoke on the phone. The San Joaquin County Planning Department does not maintain a list of historical places.

b. Please contact local historical and archaeological societies to identify recognized local cultural resources that are located within a one-mile radius of the proposed plant site, and incorporate and provide the results in the technical report and the AFC.

Response—Please see the response above.

c. Please provide a copy, under confidential cover, of one CHRIS technical report, # 3559, whose survey coverage is within 0.25 mile of the project site, and copies of 11 additional technical reports whose survey coverage is within 0.25 miles of the three transmission line segments that would be reconductored, including reports #'s 716, 734 (1977), 810, 4182, 4216, 4501, 5622, 5625, 6263, 6577, and 6579 (listed in Table 5.3-4).

Response—The Applicant has provided five copies of an additional CHRIS literature search and reports in confidential filing.

Appendix B (g) (2) (C)

A technical report of the results of the new surveys, conforming to the Archaeological Resource Management Report format (CA Office of Historic Preservation Feb 1990), which is incorporated by reference, shall be separately provided and submitted (under confidential cover if archaeological site locations are included).

Information required for the AFC to conform to the regulations:

Please provide a confidential technical report of the new cultural resources survey of the three transmission line segments that would have to be reconductored to accommodate this project's output.

Response— The Applicant has provided five (5) copies, under request for confidentiality, of the technical memorandum entitled "GWF Tracy Combined Cycle Power Plant (GWF Tracy); Cultural Resources Assessment" documenting the new cultural resources survey.

Appendix B(g)(2)(C)(i)

The summary from Appendix B (g)(2)(A) and the literature search results from Appendix B (g)(2)(B);

Information required for the AFC to conform to the regulations:

a. Please provide the summary and literature search results in the technical report of the new cultural resources survey.

Response— Please see the response to Data Adequacy response to Appendix B(g)(2)(C).

b. Please update the literature search results to include information obtained from local agencies and local historical and archaeological organizations.

Response— Please see the response to Data Adequacy response to Appendix B(g)(2)(C).

Appendix B(g)(2)(C)(ii)

Please provide a description of the survey procedures and methods in the technical report of the new cultural resources survey.

Information required for the AFC to conform to the regulations:

The survey procedures and methodology used to identify cultural resources and a discussion of the cultural resources identified by the survey;

Response— Please see the response to Data Adequacy response to Appendix B(g)(2)(C).

Appendix B(g)(2)(C)(iv)

A map at a scale of 1:24,000 U.S. Geological Survey quadrangle depicting the locations of all previously known and newly identified cultural resources compiled through the research required by Appendix B (g)(2)(B) and Appendix B (g)(2)(C) (ii); and

Information required for the AFC to conform to the regulations:

Please provide a copy of the USGS 7.5' quadrangle map(s) of the literature search area, under confidential cover, depicting the locations of all known cultural resources identified in the two literature searches and all new cultural resources identified in the new survey of the three transmission line segments. The map should additionally demarcate the new area surveyed, per Archaeological Resource Management Report format requirements.

Response— The Applicant has submitted five copies of Figures 5.3-E through 5.3-F, depicting all known locations of cultural resources identified in the two literature searches. These figures have submitted under a request for confidentiality.

APPENDIX 5.3B TPP AFC Cultural Resource Assessment CONFIDENTIAL

APPENDIX 5.3C GWF Tracy CHRIS Literature Search Results CONFIDENTIAL

APPENDIX 5.3E Cultural Resource Figures 5.3E1a - 5.3E1d CONFIDENTIAL

Submitted Under Request for Confidentiality

5.8 Paleontological Resources

Appendix B (g) (16) (D)

Information on the specific location of known paleontologic resources, survey reports, locality records, and maps at a scale of 1:24,000, showing occurrences of fossil finds, if known, within a one-mile radius of the project and related facilities shall be included in a separate appendix to the Application and submitted to the Commission under a request for confidentiality, pursuant to Title 20, California Code of Regulations, s 2501 et seq.

Information required for the AFC to conform to the regulations:

Please provide a map depicting known paleontological sites within a 1-mile radius of the project site must be submitted for review.

Response—Submitted under a request for confidentiality are Figures PAL-1 and PAL-2 that present the known paleontological sites within 1-mile of the project site.

Figures PAL-1 and PAL-2

Submitted Under Request for Confidentiality

5.12 Traffic and Transportation

Appendix B(g)(5)(B)

If the proposed project including any linear facility is to be located within 20,000 feet of an airport runway that is at least 3,200 feet in actual length, or 5,000 feet of a heliport (or planned or proposed airport runway or an airport runway under construction, that is the subject of a notice or proposal on file with the Federal Aviation Administration), discuss the project's compliance with the applicable sections of the current Federal Aviation Regulation Part 77 – Objects Affecting Navigable Airspace, specifically any potential to obstruct or impede air navigation generated by the project at operation; such as, a thermal plume, a visible water vapor plume, glare, electrical interference, or surface structure height. The discussion should include a map at a scale of 1:24,000 that displays the airport or airstrip runway configuration, the proposed power plant site and related facilities.

Information required for the AFC to conform to the regulations:

Please discuss the project's compliance with the applicable sections of the current Federal Aviation Regulation Part 77 – Objects Affecting Navigable Airspace, specifically any potential to obstruct or impede air navigation generated by the project at operation; such as, a thermal plume, a visible water vapor plume, glare, electrical interference, or surface structure height. The discussion should include a map at a scale of 1:24,000 that displays the airport or airstrip runway configuration, the proposed power plant site and related facilities.

Response—As discussed in AFC Section 3.3.2, the runway of the Tracy Municipal Airport is located about 14,000 feet away from the GWF Tracy project. Figure Trans-1 (which replaces AFC Figure 5.12-1) shows the location of the airport to the GWF Tracy project site. Below is a discussion of the potential project impacts to the Tracy Municipal Airport from plumes (thermal and visible), glare, and electrical interference.

Thermal Plumes

As shown on Figure Trans-1, the plant is over 1000-feet northwest of the Airport Influence Zone. The plant will generate a thermal plume from the combustion turbine exhaust stacks, but the plume would not have an affect on aircraft since it is located well outside the Airport Influence Zone.

Water Vapor Plumes

As discussed in AFC Section 5.13.4.3.7, Water Vapor Plumes, based on previous experience with combined-cycle power plants, it is likely that formation of visible plumes from the GWF Tracy turbine exhaust stacks would only occur on rare occasions (periods of rain, fog, or low temperature and high humidity). The turbines do not employ water/steam injection to control air emissions (which increases the exhaust moisture content) and as such the potential exists for the turbine exhaust stacks to condense and form significant visible water vapor plumes is very low. In addition, GWF Tracy uses a dry cooling system (air cooled condenser) and would not emit water into the atmosphere.

Regardless of the frequency of visible water vapor plumes, they will not interfere with air navigation because they would occur about 1,000-feet northwest of the Airport Influence Zone.

Glare

Impacts from glare are discussed in Section 5.13.4.3.6. In addition to glare from nighttime lighting, the plant surfaces will be treated with non-reflecting coatings that do not reflect sunlight and therefore would not affect aircraft. Even if some glare from reflected sunlight were to occur, it would not affect aircraft more than 1,000-feet from the plant.

Electrical Interference

We assume that by this topic, the CEC is concerned with interference on aircraft communication systems. The power plant and transmission line will not interfere with radio communications. The reason is that the power lines operate at 60 Hz frequency, which is everywhere there is electricity, including the radio rooms and radio equipment of ground-based emergency operation centers (e.g., fire and police dispatchers). The radio signals are much higher frequency (megahertz to gigahertz) and the radio systems are designed to be immune from 60 Hz interference from power lines so frequency interference should not be an issue.

There are only potential sources for intermittent interference from overhead electric transmission lines is corona discharges. The potential for corona impacts are discussed in Section 3.3.3, Audible Noise and Radio/TV Interference. Even if they were to occur they would not affect air traffic more that 1,000-feet from the plant site.

Conclusion

To ensure that the project would impede/obstruct air navigation, the Applicant used the Notice Criteria Tool, on the FAA website, to assess the need to prepare a FAA Form 7460-1. The results of this assessment are presented in Attachment Traffic-1.

Appendix B(g)(5)(C)

An identification, on topographic maps at a scale of 1:24,000, and a description of existing and planned roads, rail lines, (including light rail), bike trails, airports, bus routes serving the project vicinity, pipelines, and canals in the project area affected by or serving the proposed facility. For each road identified, include the following information, where applicable:

Information required for the AFC to conform to the regulations:

Please show the bus routes that serve the local area on Figure 5.12-2 and discuss what roads are serviced by the "Tracer" paratransit bus.

Response— The TRACER has 3 routes using Corral Hollow Road, about 2 miles away from the project site: Route C runs between Schulte Road and 11th Street, and the commuter routes C and D run between Schulte Road and Lowell Avenue.1 No other bus route use the

[1] http://www.mvtransit.com/Tracer_schedule.htm

roads identified as access routes in the vicinity of the project site. See updated Figure Trans-2.

Appendix B(g)(5)(C)(i)

Road classification and design capacity;

Information required for the AFC to conform to the regulations:

See comment above.

Response – Road design capacity has been assumed to be 6,000 vehicles per lane per day for undivided local roadways, and 8,000 vehicles per lane per day for divided local roadways; a capacity of 20,000 vehicles per lane per day was also assumed for freeways. The City of Tracy's roadway plan with general functional classifications was taken from the City's General Plan Draft EIR.[2] Table Trans-1 presents the local roadway classification and design capacities for GWF Tracy. San Joaquin County Traffic Engineering Department could not provide the current road classification for local roadways at this time.

TABLE TRANS-1

GWF Tracy Local Roadway Classification and Design Capacities

Roadway Segment	Between	And	Year	Median	Number of Lanes	Daily Capacity
Schulte Rd	Patterson Pass Rd	Hansen Rd	2003	Divided	4	32,000
Schulte Rd	Hansen Rd	Site Entrance	2007	Undivided	2	12,000
Schulte Rd	Site Entrance	Lammers Rd	2007	Undivided	2	12,000
Valpico Rd	Lammers Rd	Corral Hollow Rd	1996	Undivided	2	12,000
Lammers Rd	Schulte Rd	Valpico Rd	1996	Undivided	2	12,000
Mountain House Parkway	I-205 Ramps	Schulte Rd	2007	Divided	2	16,000
Mountain House Parkway	Schulte Rd	I-580 Ramps	2003	Divided	4	32,000
Corral Hollow Rd	Valpico Rd	I-580 Ramps	2007	Undivided	2	12,000
I-205	San Joaquin/Alameda County line	Mountain House Parkway	2007	Divided	4	80,000
I-205	Mountain House	Old Route	2007	Divided	4	80,000

[2] http://www.ci.tracy.ca.us/modules/dms/file_retrieve.php?function=view&obj_id=142

TABLE TRANS-1

GWF Tracy Local Roadway Classification and Design Capacities

Roadway Segment	Between	And	Year	Median	Number of Lanes	Daily Capacity
	Parkway	50				
I-580	San Joaquin/Alameda County line	Patterson Pass Rd	2007	Divided	4	80,000
I-580	Junction Route 132	Corral Hollow Rd	2007	Divided	4	80,000

Appendix B(g)(5)(C)(ii)

Current daily average and peak traffic counts;

Information required for the AFC to conform to the regulations:

Please provide current daily average and peak traffic counts for West Schulte Road and access routes.

Response – Table Trans-2 presents the current average daily trips (ADT) and peak traffic counts for local roadways. These data have been provided by Caltrans and San Joaquin County and represent the most current year for which data are available (2006). The County provided ADT and peak traffic counts on local roadways, which were collected in various years. The traffic counts were for year 2008 by incorporating a yearly growth factor of 2 percent for the available data.

TABLE TRANS-2

Current Daily Average and Peak Traffic Counts for West Schulte Road and Access Routes

Roadway Segment	Between	And	Year	ADT	AM Peak Traffic Count	PM Peak Traffic Count	Peak Hour Capacity	ADT Adjusted to Reflect 2008 conditions
Schulte Rd	Patterson Pass Rd	Hansen Rd	2003	8,587	826	535	3,200	8,868
Schulte Rd	Hansen Rd	Site Entrance	2007	6,662	872	694	1,600	6,662
Schulte Rd	Site Entrance	Lammers Rd	2007	6,662	872	694	1,600	6,662
Valpico Rd	Lammers Rd	Corral Hollow Rd	1996	1,960	244	245	1,600	2,060
Lammers Rd	Schulte Rd	Valpico Rd	1996	1,941	240	245	1,600	2,040
Mountain House Parkway	I-205 Ramps	Schulte Rd	2007	7,815	662	625	1,600	7,815
Mountain House Parkway	Schulte Rd	I-580 Ramps	2003	16,686	1,093	1,236	3,200	17,232
Corral Hollow Rd	Valpico Rd	I-580 Ramps	2007	6,578	497	581	1,600	6,578
I-205	San Joaquin/Alameda County line	Mountain House Parkway	2007	112,000	7,900	7,900	8,000	112,000
I-205	Mountain House Parkway	Old Route 50	2007	113,000	7,900	7,900	8,000	113,000
I-580	San Joaquin/Alameda County line	Patterson Pass Rd	2007	37,000	3,700	3,700	8,000	37,000
I-580	Junction Route 132	Corral Hollow Rd	2007	41,000	4,100	4,100	8,000	41,000

Appendix B(g)(5)(C)(iii)

Current and projected levels of service before project development, during construction, and during project operation;

Information required for the AFC to conform to the regulations:

Please provide current and projected levels of service before project development, during construction, and during project operation for the access routes.

Response – Because the traffic generated during project operation will represent less than 1 percent of the current demand, its impact on the level of service is assumed to be negligible. Only existing and projected LOS during construction are presented.

The San Joaquin County Traffic Engineering Department provided the percentages of trucks on some local roadways. On roadways were truck percentages were not available, the truck percentages were assumed to be the same on the entire segment. This is consistent with the trends in truck traffic observed in Tracy Peaker Project's original AFC (written in August 2001 by URS) Table 8.10-4. Truck percentages on freeways were obtained from Caltrans' website (2006 data). The number of trucks was multiplied by a Passenger Car Equivalent factor of 1.5, and then added to the remaining number of cars. This demand is divided by the capacity of the roadway to obtain the V/C ratio. Matching LOS was obtained with Table 5.12-2 "Level of Service Criteria for Roadways". The existing and construction LOS are presented in Tables Trans-3a and Trans-3b.

Based on the analysis, the local roadways and state facilities are forecasted to operate at an acceptable level when construction traffic is added to existing conditions, with the exception of the following segments:

- I-205 between Mountain House Parkway and the San Joaquin/Alameda county line
- I-205 between Old Route 50 and Mountain House Parkway

Note that these segments were already at LOS F before the addition of construction traffic.

TABLE TRANS-3A

GWF Tracy Existing Level of Service

	Roadway Segment	Between	And	Year	ADT Adjusted to Reflect 2008 conditions	Daily Capacity	Truck Percentage (PCE=1.5)	ADT with PCE applied	Daily V/C	Daily LOS
Existing Conditions	Schulte Rd	Patterson Pass Rd	Hansen Rd	2003	8,868	32,000	10.7%*	9,343	0.3	A
	Schulte Rd	Hansen Rd	Site Entrance	2007	6,662	12,000	10.7%	7,019	0.59	A
	Schulte Rd	Site Entrance	Lammers Rd	2007	6,662	12,000	10.7%	7,019	0.59	A
	Valpico Rd	Lammers Rd	Corral Hollow Rd	1996	2,060	12,000	7.2%*	2,135	0.18	A
	Lammers Rd	Schulte Rd	Valpico Rd	1996	2,040	12,000	7.2%*	2,114	0.18	A
	Mountain House Parkway	I-205 Ramps	Schulte Rd	2007	7,815	16,000	27.5%	8,890	0.56	A
	Mountain House Parkway	Schulte Rd	I-580 Ramps	2003	17,232	32,000	27.5%*	19,602	0.62	B
	Corral Hollow Rd	Valpico Rd	I-580 Ramps	2007	6,578	12,000	7.2%	6,815	0.57	A
	I-205	San Joaquin/Alameda County line	Mountain House Parkway	2007	112,000	80,000	10.3%	117,768	1.48	F
	I-205	Mountain House Parkway	Old Route 50	2007	113,000	80,000	10.3%	118,820	1.49	F
	I-580	San Joaquin/Alameda County line	Patterson Pass Rd	2007	37,000	80,000	16.1%	39,979	0.5	A
	I-580	Junction Route 132	Corral Hollow Rd	2007	41,000	80,000	12.5%	43,563	0.55	A

*San Joaquin County Traffic Engineers did not have the information available.

TABLE TRANS-3B

GWF Tracy Future Level of Service

Roadway Segment		Between	And	Added Vehicles	Percentage of ADT	Construction Daily Demand	Daily V/C	Daily LOS during Construction	Daily LOS before Construction
Future Conditions	Schulte Rd	Patterson Pass Rd	Hansen Rd	1041	11%	10,384	0.32	A	A
	Schulte Rd	Hansen Rd	Site Entrance	1041	15%	8,060	0.67	B	A
	Schulte Rd	Site Entrance	Lammers Rd	347	5%	7,366	0.61	B	A
	Valpico Rd	Lammers Rd	Corral Hollow Rd	347	16%	2,482	0.21	A	A
	Lammers Rd	Schulte Rd	Valpico Rd	347	16%	2,461	0.21	A	A
	Mountain House Parkway	I-205 Ramps	Schulte Rd	694	8%	9,584	0.60	A	A
	Mountain House Parkway	Schulte Rd	I-580 Ramps	347	2%	19,949	0.62	B	B
	Corral Hollow Rd	Valpico Rd	I-580 Ramps	347	5%	7,162	0.60	A	A
	I-205	San Joaquin/Alameda County line	Mountain House Parkway	347	0%	118,115	1.48	F	F
	I-205	Mountain House Parkway	Old Route 50	347	0%	119,167	1.49	F	F
	I-580	San Joaquin/Alameda County line	Patterson Pass Rd	347	1%	40,326	0.50	A	A
	I-580	Junction Route 132	Corral Hollow Rd	347	1%	43,910	0.55	A	A

Appendix B(g)(5)(C)(iv)

Weight and load limitations;

Information required for the AFC to conform to the regulations:

Please provide weight and load limitations for the access routes.

Response—In addition to the information provided in Section 5.12.3.4 of the AFC, all state facilities allow a maximum vehicular gross weight of 80,000 pounds; the maximum axle weight for a single axle is 20,000 pounds.[3]

Appendix B(g)(5)(C)(v)

Estimated percentage of current traffic flows for passenger vehicles and trucks; and

Information required for the AFC to conform to the regulations:

Please provide estimated percentage of current traffic flows for passenger vehicles and trucks using West Schulte and the access routes.

Response – Please see the response to Data Adequacy Request for Appendix B(g)(5)(C)(iii).

Appendix B(g)(5)(E)

A discussion of project-related hazardous materials to be transported to or from the project during construction and operation of the project, including the types, estimated quantities, estimated number of trips, anticipated routes, means of transportation, and any transportation hazards associated with such transport.

Information required for the AFC to conform to the regulations:

Please provide a discussion of project-related hazardous materials to be transported to or from the project during operation of the project, including the types, estimated quantities, estimated number of trips, anticipated routes, means of transportation, and any transportation hazards associated with such transport.

Response—The proposed use of ammonia and numerous other hazardous materials at GWF Tracy does not represent a new or increased use of hazardous materials above the quantities reviewed and approved by the CEC in the original license. The Tracy Peaking Project license assumed the use and delivery of numerous hazardous materials, including the delivery of ammonia every 4 days.[4] The only regulated substance proposed for use at GWF Tracy is aqueous ammonia (not a new use at the site) and approximately one or two deliveries per month are expected, with a maximum of five deliveries per month during peak operation. The Tracy Peaking Project was licensed assuming an ammonia delivery every 4 days. The volume of each delivery is assumed to be 8,000 gallons.

---

[3] http://www.dot.ca.gov/hq/traffops/trucks/trucksize/weight.htm

[4] *Appendix 1A of the AFC contains copies of the Tracy Peaking Project AFC, Staff Assessment, and Commission Decision.*

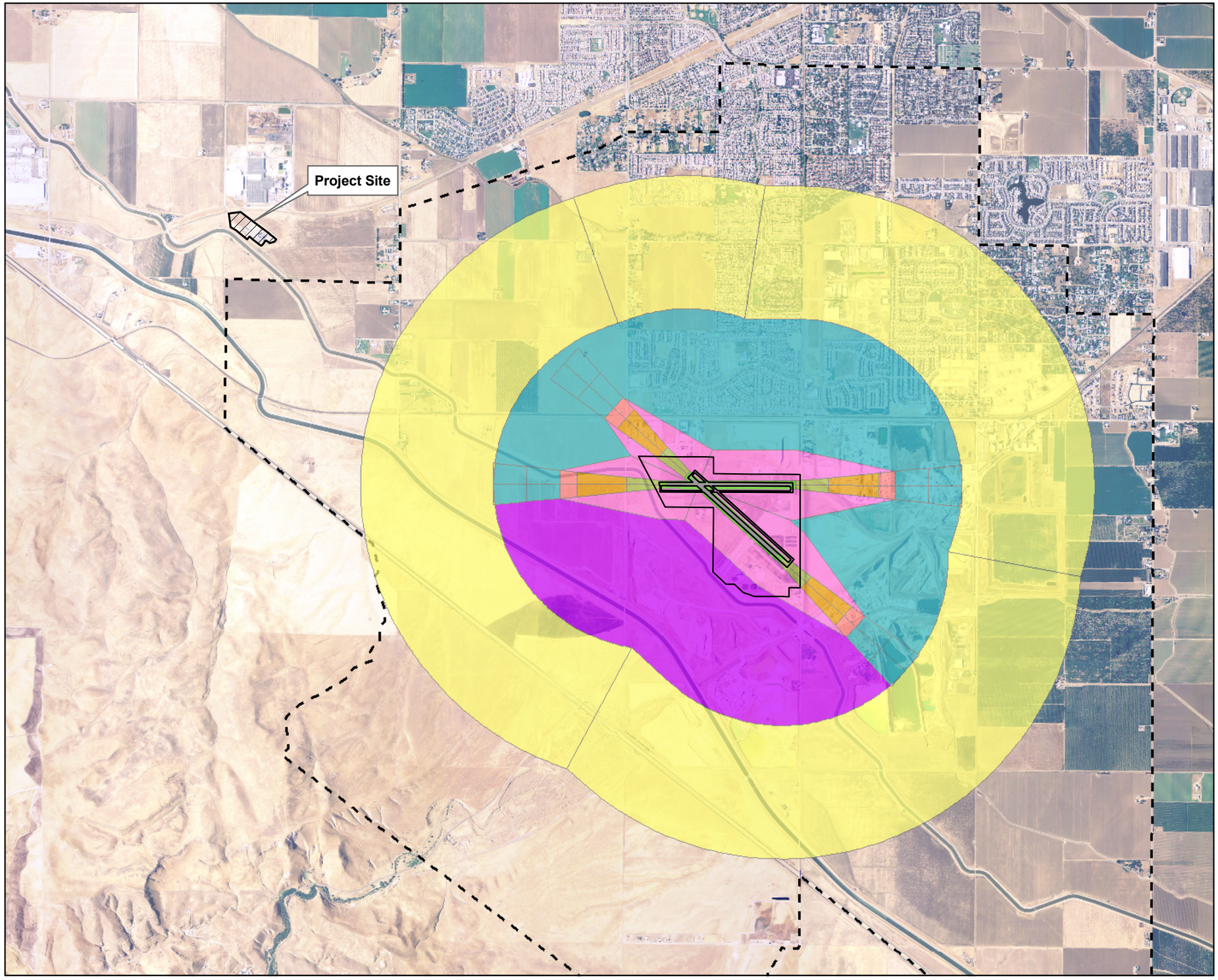

LEGEND

Project Boundary

Tracy Municipal Airport

Airport Zones

Surface, Slope

- CONICAL, 20:1
- HORIZONTAL, 7:1
- HORIZONTAL, FLAT
- INNER APPROACH, 20:1
- OUTER APPROACH, 20:1
- PRIMARY, FLAT
- RUNWAY PROTECTION, 20:1
- RUNWAY, FLAT
- TRANSITIONAL, 7:1
- Tracy Municipal Airport Area Of Influence

Notes:
1. Source: San Joaquin County, 2008.

N

0 1,500 3,000
Feet

FIGURE TRANS-1
TRACY MUNICIPAL AIPPORT INFLUENCE AREA
GWF TRACY COMBINED CYCLE POWER PLANT PROJECT
SAN JOAQUIN COUNTY, CA

CH2MHILL

SAC\\ZION\SACGIS\PROJ\365887_GWF_TRACY\MAPFILES\AIRPORTZONES.MXD MHASKELL 8/26/2008 09:37:20

Attachment Traffic-1

FAA Form 7460-1Notice of Proposed Construction or Alteration

Notice Criteria Tool

The requirements for filing with the Federal Aviation Administration for proposed structures vary based on a number of factors: height, proximity to an airport, location, and frequencies emitted from the structure, etc. For more details, please reference CFR Title 14 Part 77.13.

You must file with the FAA at least 30 days prior to construction if:

- your structure will exceed 200ft above ground level
- your structure will be in proximity to an airport and will exceed the slope ratio
- your structure involves construction of a traverseway (i.e. highway, railroad, waterway etc...)
- your structure will emit frequencies, and does not meet the conditions of the FAA Co-location Policy
- your structure will be in an instrument approach area and might exceed part 77 Subpart C
- your structure will be on an airport or heliport

If you require additional information regarding the filing requirements for your structure, please identify and contact the appropriate FAA representative using the Air Traffic Areas of Responsibility map for Off Airport construction, or contact the FAA Airports Region / District Office for On Airport construction.

The tool below will assist in applying the appropriate slope calculations per part 77.13(a)(2)(i) through (iii)

Latitude:	37	Deg	42	M	43	S	N
Longitude:	121	Deg	29	M	34	S	W
Horizontal Datum:	NAD83						
Site Elevation (SE):	180	(nearest foot)					
Structure Height (AGL):	150	(nearest foot)					

Results

You do not exceed Notice Criteria.

Form 7460-1 for ASN: 2008-AWP-5252-OE

For information only.
This proposal has not yet been studied. Study outcomes will be posted at a later date.
Public comments are not requested, and will not be considered at this time.

Overview

Study (ASN): 2008-AWP-5252-OE
Prior Study:
Status: Work In Progress

Received Date: 08/27/2008
Entered Date: 08/27/2008
Map: View Map

Construction Info

Notice Of: Construction
Duration: Permanent (Months: 0 Days: 0)
Work Schedule: 08/01/2011 to 09/01/2013

Structure Summary

Structure Type: Stack
Other Description: Power Plant Exhaust Stack
NACG Number:
FCC Number:

Structure Details

Latitude (NAD 83): 37° 42' 42.79" N
Longitude (NAD 83): 121° 29' 33.65" W
Datum: NAD 83
City: Tracy
State: CA

Height and Elevation

	Proposed
Site Elevation:	176
Structure Height:	150
Total Height (AMSL):	326

Frequencies

Low Freq	High Freq	Unit	ERP	Unit

From: Kehoe, Mark [mkehoe@gwfpower.com]
Sent: Thursday, August 28, 2008 7:52 AM
To: Salamy, Jerry/SAC; Kieffer, Paul
Subject: FW: Status of FAA Filing
From: noreply@faa.gov [mailto:noreply@faa.gov]
Sent: Thursday, August 28, 2008 6:01 AM
To: Kehoe, Mark; msebra@ch2m.com
Subject: Status of FAA Filing

Your filing is assigned Aeronautical Study Number (ASN): 2008-AWP-5252-OE.

To review your electronic record, go to our website oeaaa.faa.gov and select the Search Archives link to locate your case using the assigned Aeronautical Study Number (ASN). Copies of your letter are available on the website for your convenience.

The FAA verified your filing and an aeronautical study has been initiated. Please allow a minimum 30 days for the FAA to complete the study. Please refer to the assigned ASN on all future inquiries regarding this filing.

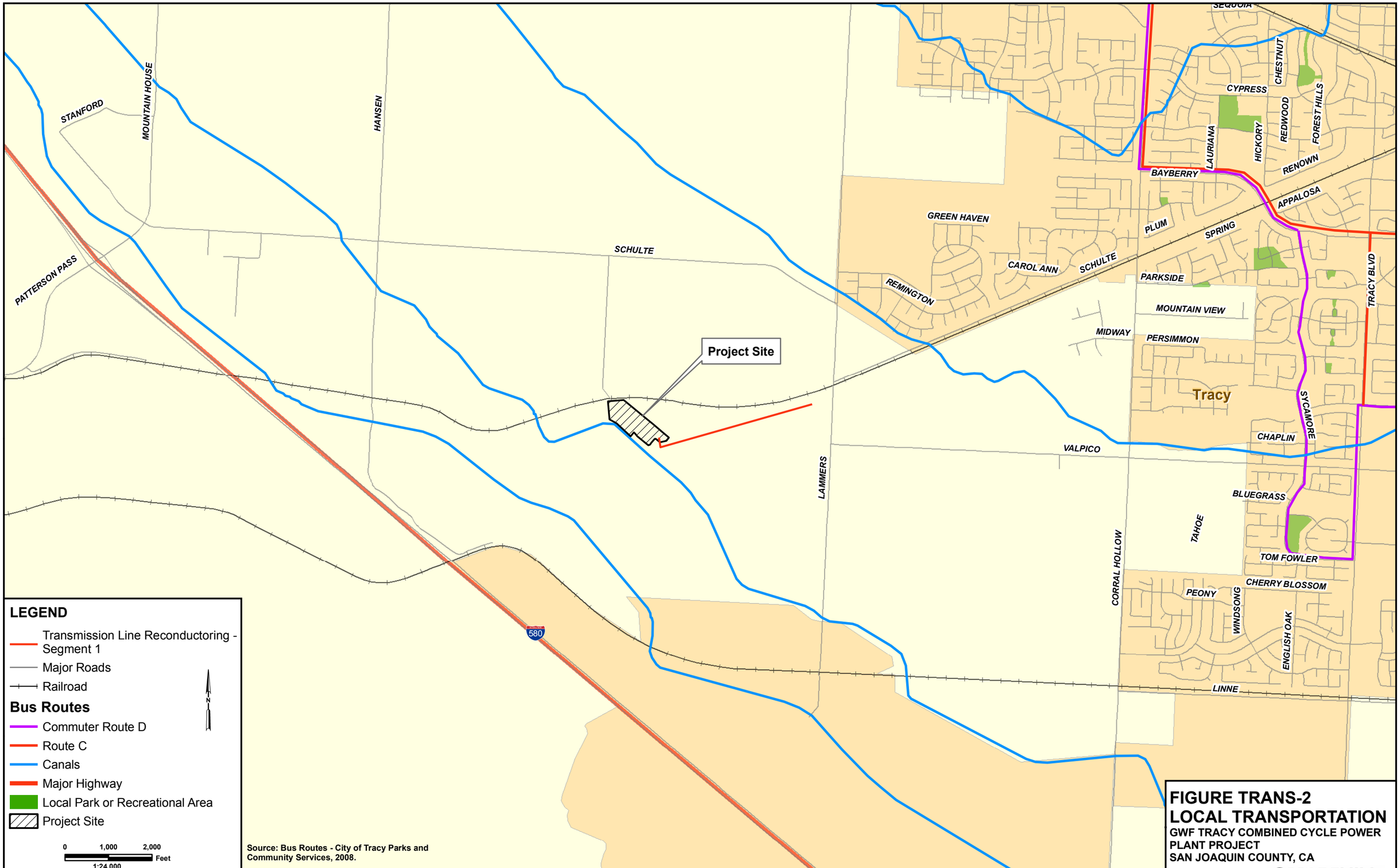

FIGURE TRANS-2
LOCAL TRANSPORTATION
GWF TRACY COMBINED CYCLE POWER PLANT PROJECT
SAN JOAQUIN COUNTY, CA

CH2MHILL

SAC \\ZION\SACGIS\PROJ\365887_GWF_TRACY\MAPFILES\LOCAL_TRANSPORTATION.MXD 6/30/2008 17:08:10

5.14 Water Resources

Appendix B(g)(14)(C)(i)

Source(s) of the primary and back-up water supplies and the rationale for their selection;

Information required for the AFC to conform to the regulations:

Please provide a description of the back-up water supply and a discussion of the infrastructure/pipeline required for delivery.

Response – The reference to a backup water supply in third sentence of Section 5.15.4.3 is incorrect and this sentence is hereby deleted from the AFC. GWF Tracy is not proposing a back-up water source. The original Tracy Peaker Plant AFC had proposed to use the Tracy Biomass facility's 120 acre-feet per year (afy) of water allocation as a back-up supply. However, subsequent to the construction of the Tracy Peaker Project, the Tracy Biomass facility changed ownership and the water allocation from the biomass plant is no longer available to GWF.

Appendix B(g)(14)(C)(iii)
Average and maximum daily and annual water demand and waste water discharge for both the construction and operation phases of the project;

Information required for the AFC to conform to the regulations:

Please provide the average and maximum daily and annual construction water demand for the project.

Response—Maximum daily water use for construction activities will occur during site grading and excavation, expected to take place over an 8-month period. Most of this water will be used for fugitive dust control. The maximum daily use is expected to be approximately 12,000 gallons and the daily average is estimated at approximately 2,000 gallons. Additional water will be required for flushing and commissioning of the water treatment systems and the HRSG's. Steam blows of the HRSG's will also be performed during startup. It is estimated that these activities will take place over a one-month period, with peak daily water use estimated at 42,000 gallons and average daily water use estimated at 2,000 gallons. The estimated annual average and maximum construction water use are 416,000 and 2.5 million gallons, respectively. Wastewater from these activities will be discharged to an existing onsite holding tank for transport offsite, an arrangement that is also used for plant wastewater and contact stormwater runoff.

Appendix B(g)(14)(C)(v)

For all water supplies intended for industrial uses to be provided from public or private water purveyors, a letter of intent or will-serve letter indicating that the purveyor is willing to serve the project, has adequate supplies available for the life of the project, and any conditions or restrictions under which water will be provided. In the event that a will-serve letter or letter of intent can not be provided, identify the most likely water purveyor and discuss the necessary assurances from the water purveyor to serve the project;

Information required for the AFC to conform to the regulations:

Please provide a letter of intent, will-serve letter, or copy of an existing contract from Byron-Bethany Irrigation District indicating that BBID is willing to serve the project, has adequate supplies available for the life of the project, and any conditions or restrictions under which water will be provided.

Response – Attachment WR-1 presents a copy of Plain View Irrigation District's will serve letter for GWF Tracy from the original AFC. The Plain View delivery obligations to GWF were subsumed by BBID when it was merged with BBID.

Appendix B(g)(14)(C)(viii)

For all projects which have a discharge, provide a copy of the will-serve letter, permit or contract with the public or private entity that will be accepting the wastewater and contact storm water from the project. The letter, permit or contract, if possible, shall identify the discharge volumes and the chemical or physical characteristics under which the wastewater and contact storm water will be accepted.

In the event that a will-serve letter, permit, or contract cannot be provided, identify the most likely wastewater/storm water entity and discuss why the applicant was unable to secure the necessary assurances to serve the project's wastewater/storm water needs. Also, discuss the term of the wastewater service to the project, whether the wastewater entity has adequate permit capacity for the volume of wastewater from the project and has adequate permit levels for the chemical/physical characteristics of the project's wastewater and storm water for the life of the project, and any issues or conditions/restrictions the wastewater entity may impose on the project.

Information required for the AFC to conform to the regulations:

a. Please provide a copy of the will-serve letter, permit or contract with the public or private entity that will be accepting the wastewater and contact storm water from the project. The letter, permit or contract, if possible, shall identify the discharge volumes and the chemical or physical characteristics under which the wastewater and contact storm water will be accepted.

Response – Attachment WR-2 provide copies of contracts between GWF Energy LLC and Clearwater Environmental Management, Inc. for the disposal of wastewater from the Tracy Peaking Project. This contract will be used for wastewater disposal for GWF Tracy.

b. In the event that a will-serve letter, permit, or contract cannot be provided, please identify the most likely wastewater/storm water entity and discuss why the applicant was unable to secure the necessary assurances to serve the project's wastewater/storm water needs.

Response – See the response above.

Appendix B(g)(14)(D)(iv)

A copy of applicable regional and local requirements regulating the drainage systems, and a discussion of how the project's drainage design complies with these requirements.

Information required for the AFC to conform to the regulations:

Please provide a copy of Chapter 9-1400 of the San Joaquin County Ordinance for the preparation and submittal of a drainage, erosion and sedimentation control plan.

Response—Attachment WR-3 contains a copy of Chapter 9-1400 of the San Joaquin County Ordinance for the preparation and submittal of a drainage, erosion and sedimentation control plan.

Appendix B(g)(14)(v)

If using fresh water, include a discussion of the cumulative impacts, alternative water supply sources and alternative cooling technologies considered as part of the project design. Include an explanation of why alternative water supplies and alternative cooling are "environmentally undesirable," or "economically unsound;

Information required for the AFC to conform to the regulations:

Please provide a discussion of the cumulative impacts of the project's use of raw water from the Delta Mendota on downstream users and the availability of an alternative water supply that is not considered fresh inland water. Include an explanation of why alternative water supplies are "environmentally undesirable," or "economically unsound;

Response—GWF Energy LLC reviewed alternative water sources for the project (see AFC Subsection 6.5.3). The conclusion of this review determined that no cost effective alternatives exist for the small quantity of additional water required for GWF Tracy (beyond the amount of water approved for the Tracy Peaking Plant).

The total expected annual average water consumption for GWF Tracy is 54.4 acre-feet per year (afy). GWF Energy LLC has a water allocation of 136 afy from Byron Bethany Irrigation District (formerly the Plain View Irrigation District) associated with the 40 acre parcel on which GWF Tracy will be located. The Tracy Peaking Project was licensed based on an annual average water consumption of 29.5 afy and the net increase in water consumption expected for GWF Tracy is approximately 25 afy. The total expected annual average water use for GWF Tracy is well within the site's water allocation and contractual agreement between BBID and GWF Energy (see Attachment WR-1). Furthermore, the Delta Mendota canal has a capacity of approximately 3 million afy and the incremental increase in water use by GWF Tracy represents less than 0.01 percent of the canals capacity. Therefore, no cumulative water resource impacts are expected.

Appendix B(i)(2)

The name, title, phone number, address (required), and email address (if known), of an official who was contacted within each agency, and also provide the name of the official who will serve as a contact person for Commission staff.

Information required for the AFC to conform to the regulations:

Please provide the name and phone number (if known) of the official who will serve as a contact person for storm water discharge permitting and an official from San Joaquin County who is familiar with the County's drainage, erosion, and sedimentation control plan requirements.

Response—Table WR-1 presents the contact information for the San Joaquin County contacts for storm water discharge permitting and drainage, erosion, and sedimentation control plan requirements.

TABLE WR-1
San Joaquin County Storm Water and Drainage, Erosion, and Sedimentation Control Plan Contacts

Contact	Applicability
Tom Ushing, Senior Building Inspector San Joaquin County Community Development Department 1810 E. Hazelton Ave Stockton, CA 95205 (209) 468-9780	Drainage, Erosion, and Sedimentation Control Plan
Maria Hinsey San Joaquin County Department of Public Works 1810 East Hazelton Avenue P. O. Box 1810 Stockton, California 95201 Telephone No.: (209) 953-7150 Fax No.: (209) 468-2999	Stormwater Discharge Permitting

Attachment WR-1

Plain View Irrigation District Water Supply Will Server Letter

PLAIN VIEW WATER DISTRICT

Phone (209) 835-0375 Fax (209) 835-2869 pvwd@inreach.com
6715 South Tracy Blvd., Tracy, CA 95377 Mobile (209) 406-6853

BOARD OF DIRECTORS:
Russell S. Kagehiro, President
Jack Tuso, Vice President
Charles Spatafore, Jr.
Lee H. Clemons
Jeffery L. Brown

STAFF:
Nate Rupert, MANAGER

Sandra K. Dunn, ATTORNEY AT LAW
Somach, Simmons & Dunn

July 31, 2001

D. W. Wheeler
Vice President
GWF Energy LLC
4300 Railroad Avenue
Pittsburg, CA 94565

Dear Mr. Wheeler:

This "will serve" letter is in response to your request to Plain View Water District (District) to supply water to the natural gas-fired peaking power plant proposed to be constructed by GWF Energy LLC on lands located within the District's boundaries. The District is a California Water District operating under Division 13 of the California Water Code. The District is legally authorized pursuant to Water Code sections 35400 and 35401 to deliver water for domestic, municipal and industrial purposes. The District holds a contract with the U.S. Bureau of Reclamation for 20,000 acre-feet of water from the Central Valley Project. The Bureau of Reclamation delivers water to the District through the Delta-Mendota Canal.

The District has ratably apportioned its water supply to each holder of title to lands within the District. In a year in which Reclamation declares a 100 percent availability of water, each landowner is apportioned 3.4 acre-feet of water per acre. GWF Energy LLC holds title to 40 acres of land within Plain View Water District and, therefore, has an allocation of 136 acre-feet of water in each year in which the Bureau of Reclamation makes available to the District its entire contract entitlement. In years in which Reclamation is unable to provide to the District its full contract amount, each land owner's allocation is reduced proportionately.

All construction of pumping and conveyance facilities will be done in accordance with the District's specifications and construction requirements. All construction costs, including any engineering or permitting costs and all costs incurred by the District, must be borne by GWF Energy LLC.

The delivery of water will be subject to all rules and regulations established by the District, and GWF Energy LLC shall be required to pay the District for the cost of all water delivered at the then-applicable municipal and industrial rate charged by the District and shall pay its proportionate share of the District's operation and maintenance costs.

This letter is only an indication of the District's intent to provide water service and should not be construed as a binding offer.

Very truly yours,

Nate Rupert
General Manager

cc: Russell Kagehiro

CHARLES SPATAFORE JR.
President
Division VIII

RUSSELL KAGEHIRO
Vice President
Division VI

SANDRA FREDRICKSON
Director
Division I

GERALD TENNANT
Director
Division II

TIM MAGGIORE
Director
Division III

MARK FRANCO
Director
Division IV

FELIX MUSCO
Director
Division V

LEE CLEMONS
Director
Division VII

JEFF BROWN
Director
Division IX

RICK GILMORE
General Manager
Secretary

August 27, 2008

Mr. Doug Wheeler
Vice President
GWF Energy, LLC.
4300 Railroad Avenue
Pittsburg, CA 94565

Subject: Water Service to GWF Tracy Project

Dear Mr. Wheeler:

In response to you request, Byron Bethany Irrigation District (BBID or District) hereby confirms that it has assumed and will continue to honor Plain View Water District's prior service delivery commitment and contract with GWF for the Tracy Project. BBID understands GWF is seeking California Energy Commission approval to modify the Tracy Peaker Project which would result in a nominal increase in water consumption of approximately 25 acre-ft/year (AFY), bringing the future total facility requirement to approximately 56 AFY. This annual Municipal & Industrial (M&I) water demand can be accommodated through the District's Water Service Contract with the United States Bureau of Reclamation BBID confirms that it has the ability and intent to supply this additional water to GWF subject to the terms of the District.

If you have any questions, please feel free to contact me.

Sincerely,

Rick Gilmore
General Manager

c. Honorable Board of Directors
Sandra K. Dunn, General Counsel

P.O. Box 160 : 3944 Main Street : Byron, California 94514-0160
Telephone (925) 634-3534 (209) 835-0375 : Fax (925) 516-1239 (209) 835-2869

Attachment WR-2

GWF Energy LLC Contract with Clearwater Environmental Management, Inc. for Wastewater Disposal

SERVICE AGREEMENT

THIS AGREEMENT is made and entered into as of the 27th day of March, 2006, between GWF Energy LLC (Owner) with principal office at 4300 Railroad Avenue, California 94565-6006 and CLEARWATER ENVIRONMENTAL MANAGEMENT, INC (Contractor) with principal office at P.O. Box 7420, Fremont, CA 94537-7420.

1. Services:

Contractor, as independent contractor, agrees to pick-up and dispose of used oil, oil filters (crushed or uncrushed), oily water (oil with greater than 10% water), and petroleum contaminated solids on an "AS REQUESTED BASIS" within 48 hours from the following sites:

Site	Address	Contact	Telephone Number
HEPP	10550 Idaho Ave. Hanford, CA 93230	Riley Jones	(559) 583-2078
HENRIETTA	16027 25th Avenue Lemoore, CA 93245	Control Room	(559) 997-0186
TRACY PEAKER	14950 W. Schulte Road Tracy, CA 95377	Control Room	(209) 652-4091

2. Compensation:

Contractor shall provide the above services in accordance with the following rates which already include freight charges:

Used Oil	$.23 per gallon, $75.00 minimum charge per site
Oil Filters	$50.00 per drum, crushed or uncrushed
Oil water (oil w/ > than 10% H2O)	$0.95 per gallon
Petroleum contaminated solids	$225.00 per drum
Vacuum truck	$87.00 per hour (oily water separator) Minimum hours: BA - 4 hours: Hanford - 6 hours
Washout fee	NO CHARGE

Used oil must contain less than 1,000 ppm of chlorinated or halogenated compounds, and must not contain PCB=s in excess of 4 ppm. If Contractor performs field screening (flame test) of the oil and it indicates chlorinated compounds, Contractor will then perform (upon Owner's approval) a Chor D-Tect test on site at no cost.

The total contract value shall be on a "Time & Material Basis" or "A Firm Fixed Basis" with a not to exceed value per released Work Scope. The cost of services shall not exceed the amount set forth herein without prior written authorization by Owner. Contractor shall advise Owner in writing when the total expenditures approximate, but do not exceed Seventy-five Percent (75%) of the total dollars authorized in this Agreement.

3. Payment Terms and Invoicing Support:

Payment terms shall be net thirty (30) days from receipt of invoice. All charges shall be accompanied by supporting documentation, including, but not limited to invoices, receipts, statements, time records or other documents sufficient to substantiate the charges invoiced.

4. Safety:

Contractor shall be required to comply with the Safety Guidelines as set forth in Exhibit "A".

5. Term:

This Agreement shall commence on April 1, 2006 and terminate upon assignment completion, or upon (24) hours written notice to the Contractor. In discharge of any obligations to Contractor in respect to this Agreement and such termination, the Owner shall pay all costs and non-cancelable commitments properly incurred prior to the date of termination, fees earned, and fair close-out cost. Contractor shall take all reasonable steps to minimize termination cost.

This Agreement may be extended beyond the initial term, or any extension term, only by a written agreement of both parties prior to the expiration of the initial term of any extension.

6. Completion Date:

Scheduled completion date will be February 28, 2009 unless amended by prior written authorization from GWF.

7. Indemnity and Insurance:

From the date of the start of the work and to the full extent permitted by law, Contractor agrees to defend, indemnify and save harmless Owner, and their agents, servants and employees, from and against any claim, cost, expense, or liability (including attorneys' fees), attributable to bodily injury, sickness, disease, or death, or to damage to or destruction of property (including loss of use thereof), caused by, arising out of, resulting from, or occurring in connection with the negligent performance of the Work by Contractor, its subcontractor, or their agents, servants, or employees, whether or not caused in part by the active or passive negligence or other fault of a party indemnified hereunder; provided, however, Contractor's duty hereunder shall not arise if such injury, sickness, disease, death, damage, or destruction is caused by the sole negligence of a party indemnified hereunder. Contractor's obligation hereunder shall not be limited by the provisions of any worker's compensation or similar act.
During the term of this Agreement, Contractor shall procure and maintain the following minimum insurance with companies acceptable to Owner. The Contractor's insurance is incorporated herein and made a part of this agreement.

	Type of Coverage	**Amount**
A.	Workman's Comp Including Employee's Liability	Statutory $500,000
B.	Comprehensive General Liability including Contractor's protective liability, complete operations and contractual liability coverage.	$1,000,000 combined single limit For bodily injury and property damage $1,200,000 aggregate.
C.	Comprehensive Automobile Liability including hired and non-owned Automobile Coverage.	$1,000,000 per accident for bodily injury and property damage

D. Should Contractor sublet any of the Work to third party, Contractor shall require such subcontractor to furnish the same insurance and indemnity as required of the Contractor hereunder.

E. Prior to the start of work, the Contractor and all subcontractors shall furnish Owner with a Certificate of Insurance evidencing the above coverage. All policies shall be endorsed to provide Owner with thirty (30) days written notice of material change, cancellation or non-renewal of coverage. All Certificate of Insurance shall be sent to the address shown in the introductory paragraph of this contract.

F. All insurance policies required of the Contractor under the terms of this Agreement shall:

A. Include an endorsement adding Owner as Additional Insured.
Include an endorsement adding as additional insured, owner's, partners and affiliates as listed in Exhibit "C"

7. Indemnity and Insurance: (continuation)

   B. Contain provisions that underwriters will have no rights of recovery against Owner, affiliated companies, agents, directors, officers, employees, servants, or insurers of said parties, it being the intention of the parties and be primarily liable for any and all losses covered by the described insurance.

8. Independent Contractor:

   Contractor is retained and employed by Owner only to the extent set forth in this Agreement, and Contractor's relationship to Owner hereunder is that of an independent contractor. Contractor shall not be considered to have the status of an employee under this Agreement nor be entitled to participate in any pension, stock rights, bonus, profit sharing, insurance, medical care, vacation, sick leave, or other benefits provided for Owner's employees.

9. Warranty:

   Contractor warrants that all services shall be performed with a high degree of skill and care as required by customarily accepted industry good practices and procedures.

   The sole liability of Contractor, in tort or otherwise (including negligence, warranty and strict liability) for failure to meet the foregoing standard otherwise arising out of the performance of this contract shall be the reperformance by Contractor at its own cost, of any deficient services. The provisions of the Contract providing for limitation of or protection against liability shall apply to the full extent permitted by law and without regard to fault or negligence.

10. Notices:

   Any notices required to be given pursuant to the provisions of this Agreement shall be in writing and mailed to the parties at the addresses set forth in the introductory paragraph hereof.

IN WITNESS WHEREOF, the parties hereto have executed this Agreement on the day and year below written, but effective as the day and year first set forth above.

GWF ENERGY LLC	CLEARWATER ENVIRONMENTAL MANAGEMENT, INC.
By: Patrick H Burke	By: [signature] DAVE ROOTD
Title: Vice President	Title: VP SALES
Date: 7/11/06	Date: 7/11/06

SA-06-0228

Exhibit A
Contractor Safety Guidelines

Purpose:
The purpose of these guidelines is to provide safety information to the contractor and its subcontractors. It informs contractors of GWF's procedural methods designed to create a safe workplace for both the contractor's and GWF employees. Contractors are required to adhere to these guidelines when working on or visiting GWF facilities.

Scope
These guidelines apply to all GWF contractors, their subcontractors, agents, invitees and vendors.

Other Document Incorporation
GWF's Safety Procedures Manual is hereby incorporated into these guidelines by reference. It may be examined at any GWF facility. Upon request, GWF will furnish any applicable sections to the contractor or its subcontractors.

Admission Into and Conduct at GWF Facilities
Contractor shall:

1. Report to the plant control room for work instructions and briefings.
2. Furnish GWF's Control Room Operator with a list of all its employees entering the facility. The list shall also contain names of its subcontractor employees. Such list shall be provided at the beginning of each work shift
3. Commence no work and allow none of its employees to enter any operating unit without permission from GWF's Control Room Operator.
4. Operate no GWF valves, vehicles, equipment or tools.
5. Coordinate material and equipment deliveries and removal with GWF's Control Room Operator.
6. Furnish GWF's Control Room Operator with an MSDS for chemicals and hazardous materials brought into the facility.
7. Take no photographs of GWF operating units without permission from GWF's Operations Manager.
8. Maintain good housekeeping in its work area.
9. Follow all GWF, Cal/OSHA, and other applicable rules and regulations.

Emergencies
Contractor shall:

1. Provide GWF's Control Room Operator with phone numbers and addresses of its emergency care providers, i.e. Doctor, clinic, hospital, or other emergency care facility.
2. Furnish an accident report involving any of its employees to GWF's Control Room Operator upon completion of the accident investigation.

Equipment, Materials, Tools and Personal Protective Equipment Loans
GWF shall:

1. Loan no equipment, materials, tools, vehicles, safety devices, or personal protective equipment.

Contractor shall:

1. Not Operate or otherwise utilize any GWF vehicles, equipment or tools.
2. Determine and have available for use, all necessary personal protective equipment and safety devices before entering GWF's plants.

Special or Extraordinary Circumstances, Conditions or Actions
Contractor shall:

1. Immediately notify GWF's Control Room Operator of any unforeseen or extraordinary circumstance, condition or action that affects or could affect the safety and security of individuals on GWF property, neighboring property or the public at large.
2. Immediately notify GWF's Control Room Operator if an unforeseen change in contractors work plans could materially affect the safety of any individuals involved, or could affect the integrity or operation of GWF's equipment.

Attachments
1. *GWF Lockout-Tagout Procedure*: This procedure is attached as an example of one of GWF's procedures critical to worker safety.

   The Contractor is responsible for ensuring its employees follow GWF safety procedures. Upon request GWF will furnish any applicable sections of its Safety Procedures Manual to the contractor or its subcontractors. It may also be examined at any GWF facility. See *Other Document Incorporation* section above.

EXHIBIT C

PRIMARY AND ADDITIONAL INSUREDS

Primary

GWF Energy LLC

Additional Insureds

PSEG California Corp.
PSEG California II Corp
PSEG California III Corp

Harbinger GWF LLC
Harbinger GWF II LLC
Harbinger GWF III LLC

GWF Power Systems Company, Inc.

Financing Parties (to be named later)

General Electric Package Power

Bay Area Power LLC

GWF Power Systems LP

GWF Bay Area, Inc.

Harbert Bay Area, Inc.

PSEG Bay Area Inc.

Harbert GWF, Inc.

PSEG Global Inc.

PSEG Power LLC

PSEG Baja Inc.

PSEG Project Services, Inc

PSEG Tracy, Inc.

Hanford LP

GWF Hanford, Inc.

Harbert Hanford, Inc.

PSEG Hanford Inc.

PSEG GWF Inc.

PSEG Global USA, Inc.

Harbert Cogen, Inc.

North Bay Power LLC

Harbert Tracy, LP

Tracy Operators

MODIFICATION NO. 01

TO

SERVICE AGREEMENT NO.06-0228

BETWEEN

GWF ENERGY LLC AND CLEARWATER ENVIRONMENT

This AGREEMENT MODIFICATION is made and entered into effective as of the 30th day of July 2007, by and between GWF Enery and Clearwater Environmental pursuant to the terms and conditions of the AGREEMENT referenced above.

IN CONSIDERATION of the terms and conditions hereinafter set forth the parties hereto agree as follows:

MODIFICATIONS

The AGREEMENT identified above, dated effective July 11, 2006 is hereby modified as follows:

Change of name from Clearwater Environmental to Asbury Environmental Services (AES). Address will remain the same.

Rates and Expiration date February 28,2009 in this Service Agreement 06-0228 will remain the same.

All other terms and conditions of the AGREEMENT referenced above shall remain unchanged and in full force and effect.

IN WITNESS WHEREOF the parties hereto have executed this AGREEMENT MODIFICATION, to be effective as of the date first written above, on the dates set forth below.

GWF ~~POWER SYSTEMS L.P.~~ Energy LLC
By: ~~GWF Bay Area Inc.~~ PHB
~~It's Managing General Partner~~

BY: Patrick H Bark

TITLE: Vice president

DATE: 8-29-07

Mod 072608

ASBURY ENVIRONMENTAL SERVICES

BY: DAVID A. BATT

TITLE: Sales mgr

DATE: 8/28/07

Attachment WR-3

Copy of Chapter 9-1400 of the San Joaquin County Ordinance

DIVISION 14

GRADING AND EXCAVATION PROVISIONS

CHAPTER 9-1400

GRADING AND EXCAVATION PROVISIONS: INTENT AND ORGANIZATION

Sections:

9-1400.1	**Title and Intent.**
9-1400.2	**Organization.**

9-1400.1 TITLE AND INTENT.

Division 14 constitutes the Grading and Excavation Provisions. The intent of this Division is to provide standards for grading and excavations on private property for agricultural leveling, quarry mining, and grading related to development within the unincorporated area of San Joaquin County.
(Ord. 3675)

9-1400.2 ORGANIZATION.

Division 14 consists of the following Chapters:

(a) 9-1400 Grading and Excavation Provisions: Intent and Organization;

(b) 9-1405 Grading and Excavation Requirements;

(c) 9-1410 Agricultural Excavation Standards;

(d) 9-1415 Quarry Excavation Standards.

(Ord. 3675)

CHAPTER 9-1405

GRADING AND EXCAVATION REQUIREMENTS

Sections:

9-1405.1	**Intent.**
9-1405.2	**Grading or Excavation Permit Required.**
9-1405.3	**Exemptions.**
9-1405.4	**General Requirements.**
9-1405.5	**Removal from Site.**
9-1405.6	**Water Obstruction.**
9-1405.7	**Levee Work.**
9-1405.8	**Administration.**

9-1405.1 INTENT.

The intent of this Chapter is to regulate grading and excavations related to development projects.
(Ord. 3675)

9-1405.2 GRADING OR EXCAVATION PERMIT REQUIRED.

Except for the specific exemptions listed hereinafter, no person shall do, or permit to be done, any grading or excavation without a valid grading permit obtained from the Building Inspection Division.
(Ord. 3675, 3715)

9-1405.3 EXEMPTIONS.

The following grading may be done without obtaining a grading permit as required by this Title. Exemption from the requirement of a grading permit shall not be deemed to be permission to violate any provision of this Title.

(a) Minor projects which have cuts or fills, and which meet all of the following:

(1) Involve the removal, plowing under, or burial of less than ten thousand (10,000) square feet of vegetation on slopes eight percent (8%) or greater, or any amount of vegetation on slopes less than eight percent (8%);

(2) Do not create unstable or erodible slopes;

(3) Do not encroach onto sewage disposal systems or areas;

(4) The cut is either

(A) Less than two (2) feet in depth, or

(B) The cut does not create a slope greater than five (5) feet in height and steeper than one and one-half (1 1/2) horizontal to one (1) vertical;

(5) The fill is either

(A) Less than one (1) foot in depth and placed on natural terrain with a slope flatter than five (5) horizontal to one (1) vertical, or

(B) Less than three (3) feet in depth, not intended to support structures, which does not exceed fifty (50) cubic yards on any one (1) lot and does not obstruct a drainage course.

(b) Excavations in connection with a swimming pool or structural foundation authorized by a valid building permit.

(c) Trenching and grading incidental to the construction or installation of permitted underground pipe lines, underground storage tanks, septic tank disposal fields, conduits, electrical or communication facilities, and drilling or excavation for permitted wells or post holes.

(d) Excavations less than one hundred fifty (150) cubic yards for soil or geological investigations by a Geotechnical Engineer or Engineering Geologist.

(e) Grading in accordance with the plan incorporated in an approved Quarry Excavation Permit per Section 9-854, Quarry Excavation Permits, an approved Agricultural Excavation Permit per Section 9-851, or an approved Use Permit for a sanitary landfill per Section 9-821, Use Permits.

(f) Excavations for drainage or sedimentation ponds that are included as portions of other ministerial or discretionary development projects under the provisions of this Title.

(g) Grading or excavations within County rights-of-way or easements for which an encroachment permit has been issued under provisions of Section 9-1145.2.

(h) Maintenance of existing firebreaks and roads to keep the firebreak or road substantially in its original condition.

(i) Routine cemetery excavations and fills.

(j) Performance of emergency work necessary to protect life or property when an urgent necessity arises. The person performing such emergency work shall notify the Building Official promptly of the problem and work required and shall apply for a permit within ten (10) calendar days after commencing said work.

(k) Other exceptions as provided in appendix Chapter 70 of the Uniform Building Code.

(Ord. 3675; 3715; Ord. 3832 § 42, 1995)

9-1405.4 GENERAL REQUIREMENTS.

Except as modified by this Chapter, Chapter 70 of the Uniform Building Code as adopted by reference by the Board shall govern grading and excavation operations.

(Ord. 3715)

9-1405.5 REMOVAL FROM SITE.

Except as specifically provided for by one of the following, no person shall do, or permit to be done, any grading in such a manner that any quantities of dirt, soil, rock, gravel, or sand is removed from the site.

(a) Removal when done with an approved surface mining Quarry Excavation Permit per Section 9-854, Quarry Excavation Permits.

(b) Removal when done with an approved Agricultural Excavation Permit per Section 9-851, Agricultural Permits.

(c) Removal when done with an approved Use Permit for a sanitary landfill per Section 9-821, Use Permits.

(d) Removal of material related to situations listed under Section 9-1405.3, Exemptions.

(e) Removal from a development project of incidental excess material during site grading that is done with an approved grading or building permit.

(f) Removal, by governmental agency, of material donated to the governmental agency for use in governmental projects; material must have been previously stockpiled for a minimum period of eighteen (18) months. Removal shall be subject to Site Approval.

(g) Grading done by or under the supervision or construction control of a public agency of an excavation within that agency's boundaries. The agency shall assume full responsibility for ensuring that the work is done in compliance with this Title, the San Joaquin Valley Unified Air Pollution Control District's Regulation VIII (Fugitive Dust Prohibitions), and the Surface Mining and Reclamation Act. Excess soil material must be used solely for projects owned or controlled by the public agency and which are within the agency's boundary and within San Joaquin County.

(Ord. 3675; 3715; Ord. 3872 § 2, 1996)

9-1405.6 WATER OBSTRUCTION.

No person shall do or permit to be done any grading which may obstruct, impede, or interfere with the natural flow of storm waters, whether such waters are unconfined upon the surface of the land or confined within land depressions or natural drainage ways, unimproved channels or watercourses, or improved ditches, channels, or conduits, in such manner as to cause flooding where it would not otherwise occur, aggravate any existing flooding condition, or cause accelerated erosion except where said grading is in accordance with all applicable laws, including but not limited to these permit requirements.

(Ord. 3675)

9-1405.7 LEVEE WORK.

No person shall excavate or remove any material from or otherwise alter any levee required for any waterway, water body, or local drainage control without prior approval of the agency responsible for the maintenance of the levee.

(Ord. 3675)

9-1405.8 ADMINISTRATION.

This Chapter shall be administered by the Director. In subdivisions, the grading plans shall be approved by the Department of Public Works. The rough and finish grading of the lots will be inspected by the Department of Public Works. For development projects that require a discretionary permit, the grading permit will not be issued until the discretionary permit is approved.

(Ord. 3675; 3715; Ord. 3843 § 20, 1995)

CHAPTER 9-1410

AGRICULTURAL EXCAVATION STANDARDS

Sections:

9-1410.1	**Intent.**
9-1410.2	**Applicability.**
9-1410.3	**Development Standards.**
9-1410.4	**Surface Mining and Reclamation Act.**

9-1410.1 INTENT.

The intent of this Chapter is to provide standards for removing excess material from agricultural property for agricultural purposes.
(Ord. 3675)

9-1410.2 APPLICABILITY.

The provisions of this Chapter shall apply only if the amount of material being removed is limited to that which is required to increase the agricultural viability of the property.
(Ord. 3715)

9-1410.3 DEVELOPMENT STANDARDS.

The following development standards shall apply to any agricultural excavation permit approved under the provisions of this Title:

(a) **Private Roads.** All private roads involved in an excavation shall be maintained so as to control the creation of dust;

(b) **Final Grade.** The final grade shall:

(1) Not result in disruption of the flow of drainage water from the property or adjoining properties;

(2) Not adversely affect the irrigability of the property or surrounding properties. If the property is within an irrigation district, the final grade shall be limited to that elevation which is necessary to provide gravity irrigation to the property. This determination may be made by the irrigation district;

(3) Not adversely affect the relation of the water table to the surface of the land;

(4) Have an average elevation no less than the average elevation of the natural grade of the surrounding land. The average elevation of the natural or existing grade shall be the average elevation of all land one hundred (100) feet from the perimeter of the proposed excavation, excluding any portion of the perimeter adjacent to a river, riverbank, levee, public road, railroad, canal, pipeline, or other similar uses or rights-of-way;

(c) **Waterways.** A berm or other improvements may be required adjacent to any waterway, including underground facilities, which adjoins the excavation. The heights, setback, and slope of the berm shall be based on recommendation of the agency responsible for the maintenance of the waterway or the Department of Public Works;

(d) **Hours of Operation.** Excavation operations shall not be carried on during the hours from 9:00 p.m. through 5:00 a.m., except during periods of declared national, state, or local emergency. Said hours shall be based on either Pacific Standard Time or Pacific Daylight Saving Time, whichever is legally in effect. The hours of operation may be modified by the Review Authority based upon the excavation's potential effect on surrounding land uses;

(e) **Lighting.** Any night lighting established on the property shall be arranged and controlled so as not to illuminate public rights-of-way or adjacent properties;

(f) **Emissions.** All emissions shall be subject to the rules and regulations of the San Joaquin County Air Pollution Control District;

(g) **Replacement of Topsoil.** During the excavation, the topsoil shall be set aside. Upon completion of an excavation, the topsoil shall be replaced and the site leveled in conformance with the approved Grading Plan, approved by the Review Authority. Replacement of topsoil may be waived by the Review Authority if the soils report indicates the replacement of the topsoil will not enhance the agricultural suitability of the property;

(h) **Weed Control.** If noxious weeds are on the site, operations shall be in accordance with instructions from the Agricultural Commissioner of San Joaquin County;

(i) **Health Considerations.** Excavations shall not cause health or sanitary hazards and shall not create conditions which will cause the breeding or increase of mosquitos, rodents, or other pests;

(j) **Commencement of Work.** A written notification of work schedules shall be provided to the County by the applicant prior to initiating any grading or excavation;

(k) **Certification of Compliance.** At the completion of the grading, the applicant shall have a registered civil engineer or licensed land surveyor compare the excavation's final elevations with the approved permit. The engineer or surveyor shall submit a certified, written finding to the Building Official which states and documents the compliance or noncompliance of the excavation with the approved permit. If the project conforms with the approved permit, the Review Authority shall accept the certification and either notify the applicant that the stockpiled material may be removed or release the required performance guarantee, as specified in Subsection (p);

(l) **Time Limitation.** The time limit shall be based upon the characteristics of the proposal, including, but not limited to, the quantity of material to be removed and the applicant's time schedule and phasing plan. Specific time limitation may be required for individual phases of the excavation;

(m) **Erosion Control.** Protective vegetative planting, silt screen dams, or other approved methods shall be required where necessary for the control of erosion. An erosion and sediment control plan approved by Development Services Division shall be part of the reclamation plan;

(n) **Excavation/Reclamation Schedule.** The reclamation plan (as required in Section 9-851.3) shall show the phases of excavation. Reclamation on one (1) phase of an excavation shall be initiated prior to the start of the next excavation phase. The final reclamation of any phase of excavation shall be completed within two (2) years of the commencement of the reclamation process. Excavation shall be limited so that at any point of time a maximum of one (1) phase is being reclaimed while one (1) phase is being excavated;

(o) **Annual Inspection Reports.** The applicant shall pay a fee to the County of San Joaquin to cover the cost of annual inspections of the excavation to ensure compliance with the conditions of the permit and the reclamation plan. The County may use professional services as provided for in Section 9-240.11. The consultant shall be selected by San Joaquin County. Upon completion of the annual inspection, the person in charge of the mining operation shall submit to the State Geologist and the County a report which shall contain all the information as required by Section 2207 of the Public Resources Code. Additional inspections may be conducted, but the cost of additional inspections shall be paid for by the applicant only if noncompliance with the conditions of the Agricultural Excavation Permit or the reclamation plan is found;

(p) **Performance Guarantee.** In order to ensure reclamation of the site, compliance with conditions of approval, and compliance with County and State mining regulations, the applicant shall provide performance guarantees as a condition of the issuance of the Agricultural Excavation Permit. The amount and form of the guarantee shall be subject to annual review and approval by the County and the State, and the amount shall be adequate to ensure reclamation of disturbed land and/or land to be disturbed during a given phase. The annual review of the financial guarantee shall be coordinated with the annual inspection and approval of successive reclamation security so that the guarantee includes the amount of disturbed land plus the amount of land estimated to be disturbed during the next twelve (12) months, less the amount of land previously determined by Development Services Division annual inspection to have been reclaimed. The performance guarantee shall be in the form of either: 1) a surety bond, 2) a trust fund with the lead agency, or 3) an irrevocable letter of credit. Any interest accrued in a trust fund shall stay with the trust fund account. The financial guarantee shall be payable to "San Joaquin County or the Department of Conservation" under the applicable provisions of the County and the State mining regulations. The financial guarantee shall be callable by the County or the State under the following circumstances:

(1) The applicant causes the excavation to become idle (as defined in Section 9-110) without an approved interim management plan;

(2) The applicant files for bankruptcy;

(3) The County or State determines on the basis of annual inspections and reports that the applicant has not maintained substantial compliance with the approved permit;

(4) There arises an occurrence or circumstance which, in the opinion of the County or State, jeopardizes the site reclamation; or

(5) The State makes one (1) or more of the findings specified in Section 2774.4(a) of the State Public Resources Code.

In any instance that the County or State makes the demand for partial or full tender of the financial guarantee of performance, the County and/or State may use all or any portion of the financial guarantee to reclaim the site and to recover its administrative costs associated therewith;

(q) **Enforcement.** Except as otherwise provided in State Mining Regulations, the County shall have authority to enforce provisions of the Surface Mining and Reclamation Act. The County may exercise all enforcement regulations available under the County Development Title and the State Public Resources Code. Such enforcement measures include charging the applicant the costs of administering an enforcement action. The basis for charging fees for an enforcement action shall be a time and materials compensation.

(r) **Quantity Limitation.** Excavation of more than one hundred thousand (100,000) yards of material shall require a Quarry Excavation Permit. Successive agricultural excavations on the same parcel exceeding a total of one hundred thousand (100,000) yards of material over a period of less than twenty (20) years shall not be permitted. Excavations prior to January 25, 2005 shall not be included in the calculation of the amount of material excavated.

(Ord. 3675; 3715; Ord. 4241 § 6, 2005)

9-1410.4 SURFACE MINING AND RECLAMATION ACT.

Approved Agricultural Excavation Permits shall be subject to the regulations adopted by the State Mining and Geology Board as authorized by the California Surface Mining and Reclamation Act (SMARA) of 1975 (Public Resource Code Section 2710 et seq.), as amended; Public Resource Code Section 2207; and the California Code of Regulations adopted pursuant thereto (Title 14, 3500 et seq.).
(Ord. 4241 § 7, 2005)

CHAPTER 9-1415

QUARRY EXCAVATION STANDARDS

Sections:

9-1415.1	**Intent.**
9-1415.2	**Surface Mining And Reclamation Act.**
9-1415.3	**Development Standards.**

9-1415.1 INTENT.

The intent of this Chapter is to provide standards for the extraction of mineral resources.
(Ord. 3675)

9-1415.2 SURFACE MINING AND RECLAMATION ACT.

Approved Quarry Excavation Permits shall be subject to the regulations adopted by the State Mining and Geology Board as authorized by the California Surface Mining and Reclamation Act (SMARA) of 1975 (Public Resource Code Section 2710 et seq.), as amended; Public Resource Code Section 2207; and the California Code of Regulations adopted pursuant thereto (Title 14, 3500 et seq.).
(Ord. 3715, 3788)

9-1415.3 DEVELOPMENT STANDARDS.

Any Quarry Excavation Permit approved under the provisions of this Title shall be subject to the following standards:

(a) **Permitted Accessory Uses.** Quarry excavations may include the use of equipment, structures, and facilities necessary or convenient for the extraction, processing, storage, and transport of materials, including, but not limited to:

(1) Separation plants;
(2) Rock crushers;
(3) Concrete batching plants;
(4) Asphalt batching plants; and
(5) Recycling facilities that recycle material into asphalt concrete, Portland cement concrete, aggregate base, sand, gravel, fill dirt, or other products that are determined by the Director to be common to the aggregate industry.

Permitted Accessory Uses shall not be initiated unless approved by the Review Authority as a part of a new Quarry Excavation Permit or separately approved by the Director as an addition to a previously approved Quarry Excavation Permit. The Director shall require the applicant to submit an Improvement Plan, as provided in Chapter 9-884, with fees as specified by resolution of the Board of Supervisors, in order to secure approval for the permitted accessory use.

(b) **Stockpiling.** No stockpiled soil or material shall be placed closer than twenty-five (25) feet to a property boundary except as provided for in Subsection (m);

(c) **Private Roads.** All private roads involved in an excavation shall be maintained so as to control the creation of dust. The first one hundred (100) feet of any private road on the property which intersects with a publicly maintained road shall be surfaced in a manner approved by the Director. Traffic-control and warning signs shall be installed, if required, at such intersection. The placement and size of these signs shall be approved by the Director of Public Works;

(d) **Erosion Control.** Protective vegetative planting, silt screen dams, or other approved methods shall be required where necessary for the control of erosion. An erosion and sediment control plan approved by Development Services Division shall be part of the reclamation plan;

(e) **Performance Standards.** Standards contained in Chapter 9-1025 shall be met unless otherwise modified by conditions of the Quarry Excavation Permit;

(f) **Hours of Operation.**

(1) Normal Hours. Plant operations shall normally be carried on during the hours from 5:00 a.m. and 9:00 p.m.

(2) Time Zone. Said hours shall be based on either Pacific Standard Time or Pacific Daylight Savings Time, whichever is legally in effect.

(3) Exceptions. Exceptions may be made:

(A) For periods of declared national, state, or County emergency, or

(B) If a finding can be made by the Review Authority that the longer hours of operation will not cause a nuisance in the case of a specific quarry excavation.

(4) Extension of Hours. Normal operating hours may be extended if the Director of the Community Development Department determines that the extended

hours of operation are necessary to meet the operational need of a specific project, provided:

(A) Any request for extension in the hours of operations shall be made in writing to the Director of the Community Development Department and include:

(i) The reason for the extended hours of operation,

(ii) The hours of extended operation and the day the extended operations are to commence and terminate, and

(iii) A copy of the bid specifications, contract terms, or other similar applicable documents, if applicable.

(B) The request shall be approved or disapproved by the Director of the Community Development Department within three (3) business days following the day on which the request is filed.

(i) If approved, the Director may impose conditions on the extended hours which are appropriate to reduce disturbance to the public or residents in the area of the quarry.

(ii) Notice of the approval and conditions shall be sent to all property owners in the area.

(C) The applicant shall reimburse the Community Development Department for all costs associated with the request.

(g) **Replacement of Topsoil.** In agricultural areas, the topsoil shall be set aside, and upon completion of an excavation, the topsoil shall be replaced and the site leveled in conformance with the excavation permit. This requirement may be waived if the property is to be rehabilitated for a use other than agriculture which is consistent with the General Plan, or if a soils report indicates the replacement of the topsoil will not enhance the agricultural suitability of the property. In such cases, the topsoil may be removed from the site;

(h) **Weed Control.** If noxious weeds are on the site, operations shall be in accordance with instructions from the Agricultural Commissioner of San Joaquin County;

(i) **Health Considerations.** Quarry excavations shall:

(1) Not cause health or sanitary hazards and shall not crate conditions which will cause the breeding or increase of mosquitos, rodents, or other pests.

(2) Provide an approved potable water supply for all employees.

(3) Provide approved toilets for all employees (chemical toilets are acceptable).

(4) Provide handwashing facilities on or near the approved toilets;

(j) **Setbacks.** No excavation shall take place within twenty-five (25) feet of any property line or right-of-way (nor within the allowed slopes adjacent to said twenty-five (25) foot setback), unless the elevation prior to excavation is more than that of the abutting property, in which case the elevation within said twenty-five (25) foot setback shall at no time be less than that of the abutting property, at the property line;

(k) **Slopes.** The following provisions do not apply to temporary interior cut slopes (i.e., working slopes that do not fall within any of the criteria listed below). Temporary interior cut slopes shall comply with the Cal OSHA Code of Regulations and/or the Federal OSHA Code of Regulations as applicable.

(1) Terracing Required. All slopes over fifty (50) feet in height shall be terraced with a maximum vertical distance between terraces of fifty (50) feet. Each terrace or bench shall be a minimum of twelve (12) feet wide.

(2) Terrace Drainage. Drainage plans with calculations shall be submitted for approval to Development Services Division for all terraces as part of the Reclamation Plan.

Terraces for reclaimed final slopes shall be sloped back towards the fill and be designed such that runoff is directed to collection points where it can enter catch basins and be conveyed via pipes or other acceptable conveyance to the toe of slope. The spacing of collection points shall be no greater than 1,500 feet, with each reclaimed final slope face that has terracing shall have a minimum of one (1) down drain. The method of transporting the water along the flow line of the terrace to the down drain, so as to prevent erosion and possible slope failure, shall be approved by the Development Services Division.

The method of drainage of terraces for temporary slopes at setback lines shall be submitted to Development Services division for approval.

(3) Slope Modification Requirement. The Review Authority may require slopes flatter than those specified below for safety or aesthetic purposes if the proximity of residential and other urban uses, waterways or roads, the instability of materials, or the surrounding terrain so warrants.

If after one (1) year or more of extraction the approved slope does not remain stable, the Review Authority shall have the authority to reduce the slope or require other appropriate measures in the immediate area and other areas as deemed necessary in order to correct the condition as well as require the operator to correct the deteriorated slope.

(4) Slope Stability Factors of Safety. When required in this Title to provide site-specific geologic and

engineering slope stability analysis, the following minimum slope stability factors of safety shall apply:

(A) A minimum factor of safety of 1.5 against static deep seated failure.

(B) A minimum factor of safety of 1.5 against static surficial failure.

(C) A minimum factor of safety of 1.1 against seismic failure;

(5) Temporary Cut Slopes at Setback Lines. Temporary cut slopes (i.e., for limited periods of time, slopes that are in the process of extraction prior to being backfilled) at setback lines shall not exceed one (1) foot horizontal to one (1) foot vertical, except that temporary cut slopes at setback lines to a maximum of one half (1/2) of a foot horizontal to one (1) foot vertical may be maintained if site-specific geologic and engineering analysis demonstrate through a slope stability analysis that the proposed temporary cut slopes will have a minimum slope stability factor of safety as required in Section 9-1415.3(k)(4). However, in the event that there are existing structures on the adjacent property (or the immediate potential for structures on the adjacent property), the excavation shall at not time be closer to the property line than a line projected on a slope of one (1) to one (1) from the property line to the toe of slope.

(6) Final Slopes. Final cut and/or fill slopes shall not exceed two (2) feet horizontal to one (1) foot vertical, except as specified below:

(A) Final slopes to a maximum of one and one-half (1 1/2) feet horizontal to one (1) foot vertical may be maintained when site-specific geologic and engineering analysis demonstrate through a slope stability analysis that the proposed final slopes will have a minimum slope stability factor of safety as required in Section 9-1415.2(k)(4), while demonstrating suitability for the proposed end use and protecting against erosion (by means of revegetation or other methods approved by Development Services Division).

(B) Final slopes to a maximum of one (1) horizontal foot to one (1) foot vertical may be maintained under water (beginning five (5) feet below the lowest water table on the property experienced in the preceding three (3) years) when site-specific geologic and engineering analysis demonstrate through a slope stability analysis that the proposed saturated slopes will have a minimum slope stability factor of safety as required in Section 9-1415.2(k)(4);

(7) Fill Slopes. Fill slopes shall be constructed consistent with recommendations from a qualified civil/geotechnical engineer based upon site-specific geologic conditions;

(l) **Fencing.** Fencing four (4) feet in height consisting of not less than three (3) strands of barbed wire, or an approved equivalent, shall be placed around the excavation area where slopes steeper than two (2) feet horizontal to one (1) foot vertical are maintained. Six (6) foot high security fencing or an approved equivalent shall be required where slopes steeper than two (2) feet horizontal to one (1) foot vertical are created, if the proximity of such slopes to residential uses or other uses involving a concentration of people so warrants;

(m) **Screening and Landscaping.** Where an open pit operation is visible from a public road right-of-way or property zoned or shown on the General Plan for residential development, screening consistent with Chapter 9-1020 is required;

The Review Authority may approve the use of a landscaped berm to screen the pit provided that an adequate setback for maintenance is provided and sight distance at road intersections is not impaired;

(n) **Ponding.** All water utilized in the plant operation shall be disposed of behind a closed dike unless an alternative method is approved by the Review Authority;

(o) **Excavation/Reclamation Schedule.** The reclamation plan (as required in Section 9-854) shall show the phases of excavation. Reclamation on one phase of an excavation shall be initiated prior to the start of the next excavation phase. The final reclamation of any phase of excavation shall be completed within two (2) years of the commencement of the reclamation process. Excavation shall be limited so that at any point of time a maximum of one phase is being reclaimed while one phase is being excavated;

(p) **Time Limitation.** The Review Authority may place a time limit on the Quarry Excavation Permit or any phase of the Permit. Absent any specific time limitation, the Quarry Excavation Permit shall remain in effect as long as the excavation continues in compliance with the approved Permit.

(q) **Annual Inspection Reports.** The applicant shall pay a fee to the County of San Joaquin to cover the cost of annual inspections of the excavation to ensure compliance with the conditions of the permit and the reclamation plan. The County may use professional services as provided for in Section 9-240.11. The consultant shall be selected by San Joaquin County. Upon completion of the annual inspection, the person in charge of the mining operation shall submit to the State Geologist and the County a report which shall contain all the information as required by Section 2207 of the Public Resources Code. Additional inspections may be conducted, but the cost of additional inspections shall be paid for by the applicant only if non-

compliance with the conditions of the Quarry Excavation Permit or the reclamation plan is found;

(r) **Performance Guarantee.** In order to ensure reclamation of the site, compliance with conditions of approval, and compliance with County and State mining regulations, the applicant shall provide performance guarantees as a condition of the issuance of the Quarry Excavation Permit. The amount and form of the guarantee shall be subject to annual review and approval by the County and the State, and the amount shall be adequate to ensure reclamation of disturbed land and/or land to be disturbed during a given phase. The annual review of the financial guarantee shall be coordinated with the annual inspection and approval of successive reclamation security so that the guarantee includes the amount of disturbed land plus the amount of land estimated to be disturbed during the next twelve (12) months, less the amount of land previously determined by Development Services Division annual inspection to have been reclaimed. The performance guarantee shall be in the form of either: 1) a surety bond, 2) a trust fund with the lead agency, or 3) an irrevocable letter of credit. Any interest accrued in a trust fund shall stay with the trust fund account. The financial guarantee shall be payable to "San Joaquin County or the Department of Conservation" under the applicable provisions of the County and the state mining regulations. The financial guarantee shall be callable by the County or the state under the following circumstances:

(1) The applicant causes the excavation to become idle (as defined in Section 9-110) without an approved interim management plan;

(2) The applicant files for bankruptcy;

(3) The County or state determines on the basis of annual inspections and reports that the applicant has not maintained substantial compliance with the approved Permit;

(4) There arises an occurrence or circumstance which, in the opinion of the County or state, jeopardizes the site reclamation; or

(5) The State makes one or more of the findings specified in Section 2774.4(a) of the State Public Resources Code.

In any instance that the County or state makes the demand for partial or full tender of the financial guarantee of performance, the County and/or state may use all or any portion of the financial guarantee to reclaim the site and to recover its administrative costs associated therewith;

(s) **Exception to Operating Conditions.** The Review Authority may grant an exception to any operating condition contained herein, except the requirement of a reclamation plan. A written report will be required to show that such exception will not result in a hazardous condition, the cost of strict compliance would be unreasonable in view of all the circumstances, and such exceptions will not adversely affect the environment, property, or persons in the area. Such request shall be filed with the original or a subsequent application and shall include a complete statement of justification;

(t) **Enforcement.** Except as otherwise provided in State Mining Regulations, the County shall have authority to enforce provisions of the Surface Mining and Reclamation Act. The County may exercise all enforcement regulations available under the County Development Title and the State Public Resources Code. Such enforcement measures include charging the applicant the costs of administering an enforcement action. The basis for charging fees for an enforcement action shall be a time and materials compensation; and

(u) **Groundwater Conditions.** An evaluation of the impact of resource extraction on groundwater conditions shall be required for all quarry excavations which extend to depths below the groundwater level of the uppermost aquifer.

(Ord. 3675, 3715, 3739)