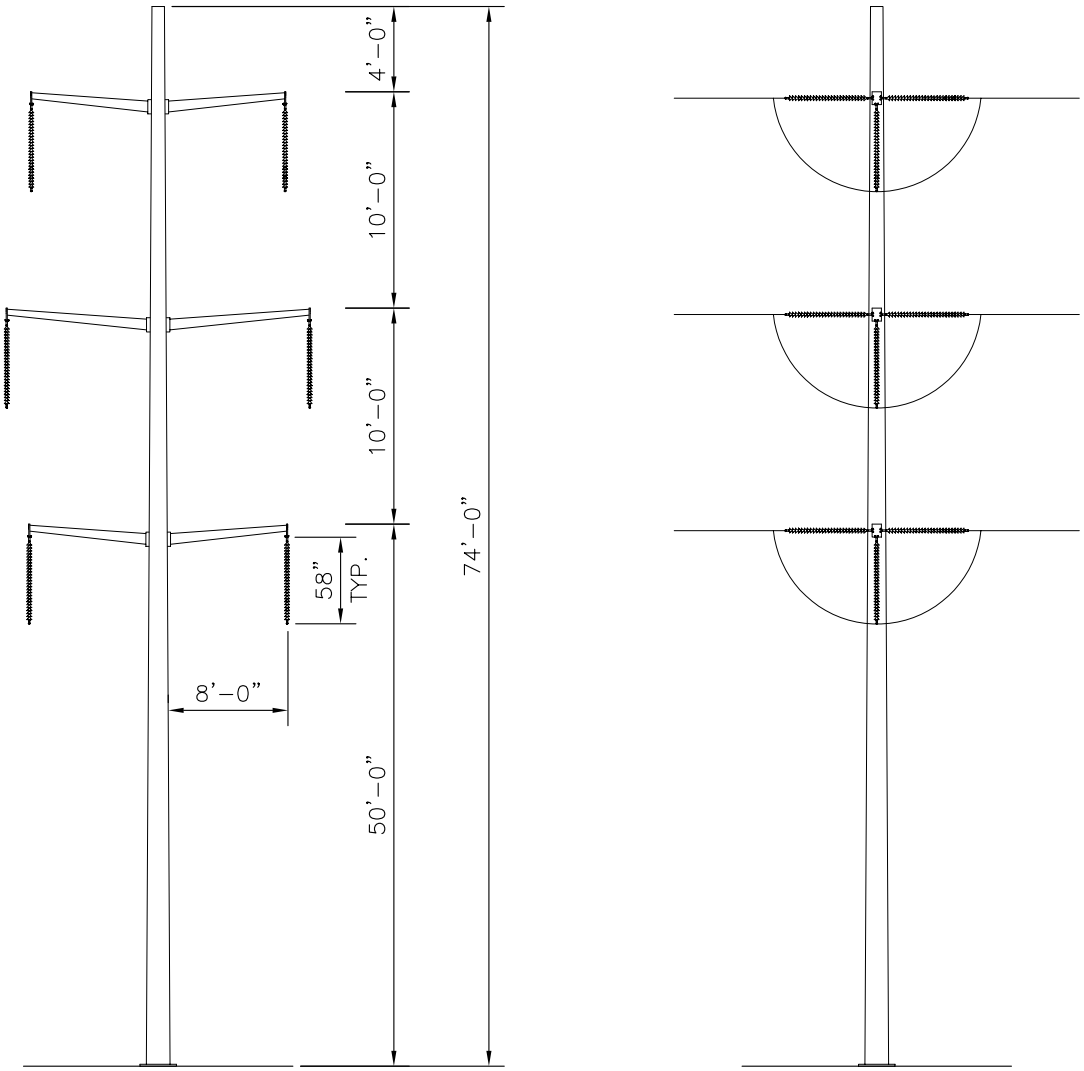


NOT TO SCALE

NOTES:

1. ALL DIMENSIONS ARE APPROXIMATE.

| | | | |
|---|---|---|---|
| URS | GWF TRACY PEAKER PROJECT<br>Project No. 51-00167032.00 | CROSS-SECTION OF SWITCHYARD TIE-LINE POLE | Figure 6-3A |

J:\CADSHARED\GWF-energy\HERIETTA\CLIENT DATA\FIG6-3A_SUP 09/07/01