Appendix A

Electrical Transmission

Appendix A: Electric Transmission

Contents

A-1 Applicant's Initial System Impact Study

A-2 Preliminary Fault Study for Draft GWF Tracy SIS/FS,
Tesla 230kV Bus "E" Radial Connection - 2002

A-3 EMF/TV Interference/Radio Interference/Audible Noise Calculations

Appendix A-1

Applicant's Initial System Impact Study

APPLICANT'S INITIAL SYSTEM IMPACT STUDY

GWF POWER SYSTEMS TRACY PEAKING PROJECT

PREPARED BY
NAVIGANT CONSULTING, INC

AUGUST 2, 2001

TABLE OF CONTENTS

INITIAL SYSTEM IMPACT STUDY
TRACY PEAKING PROJECT

Section **Page**

1. Introduction and Study Scope 1
2. Study Summary 1
   - 2.1 Interconnection Facilities 1
   - 2.2 Load Flow Studies 2
   - 2.3 Transient Stability Studies 3
   - 2.4 Short Circuit Studies 3
3. Project Information 3
4. Interconnection Assumptions 4
5. Power Flow Study Base Case Assumptions 5
6. General Criteria For Identifying Overloads 5
   - 6.1 Normal Overloads 5
   - 6.2 Emergency Overloads 6
   - 6.3 ISO Category "B" and "C" Classifications 6
7. Steady State Power Flow Study Results 7
8. Transient Stability Study Results 8
   - 8.1 Summary of the Stability Studies 8
   - 8.2 Simulated Disturbances 8
9. Short Circuit Study Results 10

Appendices:

A Contingency Lists
B Results of Powerflow Studies
C Powerflow Diagrams
D Dynamics Data for GWF Machines
E Stability Plots

1. INTRODUCTION AND STUDY SCOPE

GWF Power Systems (GWF) has requested that Pacific Gas & Electric Company (PG&E) conduct a System Impact/Facilities Study (SI/FS) for the proposed Tracy Peaking Project (TPP). The proposed TPP will be located at a site approximately 4 miles east of PG&E's Tesla Substation and will be interconnected with the Tesla 230-kV "E" bus via a "express" generator tie-line. The tie line facilities will consist of two miles of the existing Tesla-Wesley 230-kV line, 2.8 miles of new transmission line, a plant switchyard, and associated work at the Tesla 230-kV Substation. In addition, 2 miles of existing PG&E transmission line will be reconductored.

The TPP would have a net output to the PG&E transmission grid of approximately 252 MW at 0.85 (lagging) power factor. The proposed operational date for the first phase of the Project (two 86 MW peaking units) is July 2002; the Project will be converted to combined cycle operation in October 2003 by the addition of an 86 MW steam turbine.

Because PG&E's proposed schedule in its SI/FS Study Plan would not provide GWF with the necessary information on transmission system impacts for use in the preparation of the Project's Application for Certification (AFC) to the California Energy Commission (CEC), GWF retained Navigant Consulting, Inc. (Navigant Consulting) to undertake studies that would identify:

a) The impacts on the interconnected transmission system in the Study Area caused by the addition of the Project. The transmission system in the Study Area is owned by PG&E, the Western Area Power Administration, and the Modesto and Turlock Irrigation Districts, and

b) The system reinforcements necessary to mitigate any adverse impacts of the Project.

The results of these studies are contained within this *Applicant's Initial System Impact Study Report*

2. STUDY SUMMARY

2.1 Interconnection Facilities

The TPP will be interconnected with the Tesla 230-kV "E" bus via a "express" generator tie-line which will consist of two miles of the existing

Tesla-Wesley 230-kV line, 2.8 miles of new transmission line, a plant switchyard, and associated work at the Tesla 230-kV Substation.

2.2. *Powerflow Studies*

A 2004 summer peak case obtained from PG&E and utilized in previous analysis was utilized in these studies after it was modified to model:

i. 2003 summer peak loads in the pertinent areas,

ii. The new generators in the queue ahead of the TPP, and

iii. The approved PG&E transmission reliability projects and projects being developed by others that will be operational by summer 2003.

These studies indicate that the addition of the TPP:

a) Does not result in any new overloads on the PG&E system or increase any pre-TPP overloads under N-0 conditions (those in which no lines or transformers have been forced out of service).

b) Results in a slight increase (less than 2%) in six pre-TPP overloads that occur due to Category B outages. Of these overloads, only one is the result of an outage on one line (an N-1 outage). The rest are the result of an N-1 transformer outage or of outages involving two transformers and one line and one generator.

c) Results in an increase of 8-13% in the overloads on three 230-kV lines in the Bay Area as a result of an outage of two 230-kV lines from Tesla in to the Bay Area.

d) Results in an increase of about 3% in the overloads on two 230-kV lines as a result of an N-1 outage on the Metcalf-Moss Landing 500-kV line.

If necessary, the TPP could be included in a remedial action scheme (RAS) which would trip some or all of the TPP units in the event of the outages discussed above.

Section 7 of this report contains additional information on the results of the power flow studies. Lists of the contingencies simulated are contained in Appendix A, while Appendix B contains comparative information on the results of the powerflow studies. Appendix C contains powerflow diagrams for these powerflow studies.

2.3. *Transient Stability Studies*

The transient stability studies undertaken simulated the impacts of 21 230-kV and 500-kV disturbances. Section 8 of this report describes the disturbance scenarios assessed as well as the results of the studies. Information on the dynamics data for the TPP generators is contained in Appendix D, while dynamic stability plots for critical contingencies are contained in Appendix E.

As discussed in greater detail in Section 8 these transient stability studies indicate that the addition of the TPP has no adverse impacts on the system.

2.4. *Short Circuit Studies*

PG&E performed short circuit studies to assess the impacts of the TPP on fault duties at the Tesla and Westley Substations. As discussed in Section 9, these studies indicate that the TPP should not be responsible for replacing any breakers at either of these Substations.

3. PROJECT INFORMATION

The proposed GWF Power Systems (GWF) Tracy Peaking Project (TPP) will be located at a site approximately 4 miles east of PG&E's Tesla Substation. The TPP will have a maximum rated generator output of 258.4 MW at 0.85 lagging power factor with a plant load of 6.7 MW. The expected maximum net output to the PG&E system is 251.7 MW. The proposed generation will consist of:

- Two gas-fired combustion turbine/generators (CTG), rated at 85.9 MW (nominal) each, which will be online by July 2002.
- One steam turbine/generator (STG), rated at 86.6 MW (nominal), which will be online by October 2003.

Each generator unit will have a dedicated 13.8/230 kV step-up transformer connected to a new 230 kV bus located the proposed project site. The power produced by the TPP will be transmitted to PG&E's Tesla Substation through a new 230 kV radial line. The new 230 kV line will be built by reconfiguring 2 miles of the existing Tesla-Westley 230-kV line and by building 2.8 miles of new 230 kV line.

Presently the Tesla-Westley 230-kV line consists of two circuits that utilize 795 ACSR conductors and which are tied together and suspended from a double tower circuit line. This line terminates at Section E of the Tesla 230-kV bus. Separating

the two circuits will allow one circuit to be connected to the TPP as the generator tie line and the remaining circuit to be retained (and reconductored) for the Tesla-Westley 230-kV line.

4. INTERCONNECTION ASSUMPTIONS

With the input and concurrence of PG&E and GWF, Navigant Consulting conducted this impact study using the following assumptions:

c) The maximum delivery from the Project to the PG&E transmission grid would be 251.7 MW.

d) Other new generation in the study area would include:

- The 880 MW Delta Energy Center,
- The La Paloma generation facility with an output of 1,110 MW in summer and 1,160 MW in spring and winter
- The 500 MW Los Medanos Energy Center
- The 338 MW Sunrise Generation Facility
- The 1,080 MW Moss Landing Power Project
- The Midway-Sunset Project with an output of 490 MW in the summer, 540 MW in the spring, and 540 MW in the winter
- The 500 MW Elk Hills Power Project
- The 525 MW Sutter Project
- The 600 MW Metcalf Energy Center
- The 99 MW Hanford Project
- The 590 MW Contra Costa Power Plant Capacity Increase Project
- The 150 MW High Winds Project
- The 1,200 MW Morro Bay Modernization Project
- The 22 MW Stockton Cogen Project
- The 150 MW West Project Units 1-3
- The 560 MW Elverta Project

e) Approved transmission reliability projects (that would be operational by summer 2003) would include:

- A third 500/230-kV transformer at Tesla Substation
- A second 500/230-kV transformer at Tracy Substation
- A third 500/230-kV transformer at Metcalf Substation

- A new Tesla-Newark 230-kV line
- Looping the Newark-San Mateo 230-kV line into the Ravenswood Substation

f) The transfer limits of the California-Oregon Intertie (Path 66), the South-of-Los Banos Path (Path 15), and the Midway-Vincent 500-kV path (Path 26) would not be increased to accommodate the Project output.

g) The interconnection between the Project and the PG&E transmission system would be accomplished as discussed above.

5. POWER FLOW STUDY BASE CASE ASSUMPTIONS

Because of the limited amount of time available to Navigant Consulting to complete the requested studies, the parties agreed that, a 2004 summer peak case which Navigant Consulting had obtained from PG&E and utilized in studies for another project could be modified and used for these studies. Navigant Consulting modified this case so that it modeled 2003 summer peak loads in the pertinent areas, the new generators in the queue ahead of the Project, and the approved PG&E transmission reliability projects and projects being developed by others that will be operational by summer 2003 (as listed above).

Flows over key transmission paths in the pre- and post-Project base cases are summarized in Table 5-1:

TABLE 5-1
FLOWS OVER MAJOR TRANSMISSION PATHS

	Pre- Project Case	Post-Project Case
California-Oregon Interties (Path 66)	4,837	4,827
Pacific DC Intertie (Path 65)	3,125	3,125
South of Los Banos (Path 15)	755	752
PG&E to SCE (Path 26)	2,823	2,821

Note: Flows on Path 66, Path 65,and Path 25 are in the north-to-south direction. Flows on Path 15 are in south-to-north direction

6. GENERAL CRITERIA FOR IDENTIFYING OVERLOADS

6.1 Normal Overloads

Normal overloads are those that exceed 100% of normal interior summer ratings[1] in the summer base cases and 100% of the normal winter ratings[2] in the winter basecases.

6.2 *Emergency Overloads*

Emergency overloads are those that exceed 100% of emergency interior summer ratings[3] in the summer basecases and 100% of the normal winter ratings[4] in the winter basecases. The emergency overloads refer to overloads that occur during single (ISO Category B[5]) and multiple (ISO Category C[6]) contingencies.

6.3 *ISO Category "B" and "C" Classifications*

ISO Category "B"

- single generator outages
- single (60-500kV) transmission circuit outages
- single transformer outages

ISO Category "C"

- bus section outages
- outage cause by breaker failures
- combination of any two generator/transmission line/transformer outages
- outages of double circuit tower lines

---

[1] Summer normal interior ratings are calculated using a wind speed of 2 feet/second, an ambient temperature of 43°C, and a conductor temperature of 75°C for AAC and CU conductors. For other standard type conductors such as ACSR and ACSS the conductor temperatures used in the calculations are 80°C and 200°C respectively. A 4 feet/second wind speed is used on an exception basis.

[2] Winter normal ratings are calculated using a wind speed of 2 feet/second, an ambient temperature of 16°C, and a conductor temperature of 75°C for AAC and CU conductors. For other standard type conductors such as ACSR and ACSS the conductor temperatures used in the calculations are 80°C and 200°C respectively. A 4 feet/second wind speed is used on an exception basis.

[3] Summer emergency interior ratings are calculated using a wind speed of 2 feet/second, an ambient temperature of 43°C, and a conductor temperature of 85°C for AAC and CU conductors. For ACSR and ACSS conductors, the conductor temperatures used in the calculations are 90°C and 200°C respectively. A 4 fee/second wind speed is used on an exception basis.

[4] Winter emergency ratings are calculated using a wind speed of 2 feet/second, an ambient temperature of 16°C, and a conductor temperature of 85°C for AAC and CU conductors. For ACSR and ACSS conductors, the conductor temperatures used in the calculations are 90°C and 200°C respectively. A 4 feet/second wind speed is used on an exception basis.

[5] ISO Category B – refers to all single outages, i.e., a generator, a transmission circuit or a transformer bank.

[6] ISO Category C – refers outages resulted from the loss of two or more (multiple) components.

7. STEADY STATE POWER FLOW STUDY RESULTS

The 2003 Heavy Summer Full Loop Basecase described in Section 5 was used to assess system loading without any contingencies (N-0 conditions) and for the assessment of system impacts for single and multiple (ISO Categories "B" and "C") outages for both pre- and post-Project conditions. The outages simulated consisted of those on 70-kV, 115-kV, and 230-kV transmission facilities within PG&E's Stockton and Stanislaus planning areas, as well as on selected 500-kV facilities in northern California.

Results of the N-0 studies and ISO Category B and C outages are summarized in Table 7-1:

TABLE 7-1
POWERFLOW STUDY RESULTS

Number of Increased Overloads	Overloaded Element	Critical Outage	Loading (%)	
			Pre-Project	Post-Project
N-0 Conditions				
0	Manteca 115/60-kV transformer	n/a	103	103
Category "B" Outages				
6	County Club-UOP 60-kV line	Stagg-Country Club #2 60-kV line	116	117
	Warnerville 230/115-kV transformers	Weber 230/60-kV transformers	165	167
	One Warnerville 230/115-kV transformer	Parallel Warnerville 230/115-kV transformer	117	118
	Ellis-Tracy JC 115-kV line	Tesla-Ellis line and Stanislaus generation	105	107
	NWMN JCT-STNSLSRP 60-kV line	VLLY SPS-PRDE JCT 60-kV line and Martell generator	110	111
Category "C" Outages				
3	Tesla F-ADCC 230-kV line ADCC-Newark 230-kV line C.Costa-Ls Pstas 230-kV line	Tesla D-Newark and Tesla F-Ravenswood 230-kV lines	102 102 102	115 115 110
500-kV Outages				
2	Metcalf-Moss Landing 230-kV lines	Metcalf-Moss Landing 500-kV line	104	107

Review of the information in Table 7-1 shows that the addition of the TPP:

- Does not result in any new overloads on the PG&E system or increase any pre-TPP overloads under N-0 conditions (those in which no lines or transformers have been forced out of service).
- Results in a slight increase (less than 2%) in six pre-TPP overloads that result from Category B outages. Of these overloads, only one is to an N-1 line outage. The rest are the result of an N-1 transformer outage or of outages involving two transformers and one line and one generator.
- Results in an increase of 8-13% in the overloads on three 230-kV lines as a result of an N-2 outage on two 230-kV lines from Tesla in to the Bay Area.
- Results in an increase of about 3% in the overloads on two 230-kV lines as a result of an N-1 outage on the Metcalf-Moss Landing 500-kV line.

8. TRANSIENT STABILITY STUDY RESULTS

Stability studies were performed to ensure that the transmission system would remain in operating equilibrium through normal and abnormal operating conditions after the Project is operational.

8.1 Summary of the Stability Studies

Outage simulations, outlined in section 8.2, were performed to ensure system stability. The simulations were performed over a 20 second study period with the Project included in the model. All of these simulations demonstrated satisfactory results, and it is assumed that the stability performance without the Project would also demonstrate the same or better results. Plots for critical outage simulations are contained in Appendix E.

8.2 Simulated Disturbances

The following simulations were performed for a study period of 20 seconds to determine whether the Project would result in system instability during selected the Category "B" and Category "C" contingencies. Those simulations for which plots are included are noted below.

<u>NERC/CAISO Category "B" Contingencies:</u>

a) Full load rejection of the proposed 258 MW GWF Tracy Peaking Plant. (Plots Included)

b) A three-phase fault with the normal clearing time at the GWF Tracy Peaking Plant 230 kV bus, followed by loss of the GWF Tracy Peaker - Tesla 230 kV line.

c) A three-phase fault with a normal 6-cycle clearing time at the Tesla 230 kV bus, followed by loss of the Tesla-Ravenswood 230 kV line. (Plots Included)

d) A three-phase fault with a normal 6-cycle clearing time at the Tesla 230 kV bus, followed by loss of the Tesla-Westley 230 kV line.

e) A three-phase fault with a normal 6-cycle clearing time at the Tesla 230 kV bus, followed by loss of the Tesla-ADCC 230 kV line.

f) A three-phase fault with a normal 6-cycle clearing time at the Tesla 230 kV bus, followed by loss of the Weber-Tesla 230 kV line. (Plots Included)

g) A three-phase fault with a normal 6-cycle clearing time at the Tesla 230 kV bus, followed by loss of the Bellota-Tesla 230 kV line.

h) A three-phase fault with a normal 6-cycle clearing time at the Tesla 230 kV bus, followed by loss of the Tesla-Newark 230 kV line. (Plots Included)

i) A three-phase fault with a normal 6-cycle clearing time at the Tesla 230 kV bus, followed by loss of the Tesla-Tracy #1 230 kV line.

j) A three-phase fault with a normal 6-cycle clearing time at the Tesla 500 kV bus, followed by loss of the Tesla 500/230 kV Bank #2. (Plots Included)

k) A three-phase fault with a normal 4-cycle clearing time at the Tesla 500 kV bus, followed by loss of the Table Mountain-Tesla 500 kV line. (Plots Included)

l) A three-phase fault with a normal 4-cycle clearing time at the Tesla 500 kV bus, followed by loss of the Vaca Dixon-Tesla 500 kV line. (Plots Included)

m) A three-phase fault with a normal 4-cycle clearing time at the Tesla 500 kV bus, followed by loss of the Tesla-Tracy 500 kV line.

n) A three-phase fault with a normal 4-cycle clearing time at the Tesla 500 kV bus, followed by loss of the Tesla-Los Banos 500 kV line.

o) A three-phase fault with a normal 4-cycle clearing time at the Tesla 500 kV bus, followed by loss of the Tesla-Metcalf 500 kV line.

p) A three-phase fault with a normal 6-cycle clearing time at the Tesla 115 kV bus, followed by loss of the Tesla 230/115 kV Bank #3.

<u>NERC/CAISO Category "C" Contingencies:</u>

a) A three-phase fault with the normal 6-cycle clearing time at the Tesla 230 kV bus, followed by simultaneous loss of Tesla - Newark #1 and Tesla -

Ravenswood #1 230 kV lines. (Plots Included)

b) A three-phase fault with the normal 6-cycle clearing time at the Tesla 230 kV bus, followed by simultaneous loss of Tesla - Pittsburg #1 and #2 230 kV lines. (Plots Included)

c) A three-phase fault with the normal 6-cycle clearing time at the Tesla 230 kV bus, followed by simultaneous loss of Tesla - Tracy #1 and #2 230 kV lines.

d) A three-phase fault with a normal 4-cycle clearing time at the Tesla 500 kV bus, followed by a simultaneous loss of the Table Mountain-Tesla and Vaca Dixon-Tesla 500 kV lines. (Plots Included)

e) A three-phase fault with a normal 4-cycle clearing time at the Tracy 500 kV bus, followed by a simultaneous loss of the Tesla-Tracy and Tracy-Los Banos 500 kV lines. (Plots Included)

9. SHORT CIRCUIT STUDY RESULTS

The results of the short circuit studies performed by PG&E are summarized in Table 9-1. Review of the information in Table 9-1 shows that:

a) Fourteen 230-kV breakers connected to the "D" bus at Tesla are overstressed in the pre-Project studies in amounts ranging from 3% to 51%. The addition of the TPP increases the overload on these breakers connected by about 1.1%.

b) Four 230-kV breakers connected to the "E" bus at Tesla are overstressed in the pre-Project studies by 27%. The addition of the TPP increases these overloads by about 3.5%.

c) One 115-kV breaker at Tesla is overstressed in the pre-Project studies (by 25%). The addition of the TPP increases has little impact on this overload.

It is GWF's understanding that current PG&E guidelines state that the Applicant is responsible for replacement of a breaker if:

1. The Project causes the breaker to be overstressed by 10% or more, or

2. If the breaker is already overstressed and the Project increases the overstress by 10% or more.

Based on these guidelines, the TPP should not be responsible for replacing any breakers at Tesla because:

a) The addition of the TPP does not result in any new overstressed breakers, and

b) The addition of the TPP does not increase the overstress on any breakers by more than 5%.

TABLE 9-1
SUMMARY OF SHORT CIRCUIT STUDY RESULTS

Bus	Breaker Number(s)	Interrupting Capacity (Amps)	Maximum Fault Current [1]			
			2003 Pre-Project		2003 Post-Project	
			Amps	% of Rating	Amps	% of Rating
Tesla 500-kV	512, 522, 712, 722, 732	38,000	35,135	92	35,463	94
	532, 542, 612, 622, 632, 642	40,000	35,135	88	35,463	89
Tesla D 230-kV	312	43,000	64,885	151	65,572	152
	322, 332, 342, 362, 372, 392, 812, 822	50,000	64,885	130	65,572	131
	202, 352, 382, 842, 892,	63,000	64,885	103	65,572	104
Tesla E 230-kV	252, 262, 272, 282	43,000	54,483	127	56,397	131
	212, 222, 232, 242, 292, 882	63,000	54,483	86	56,397	90
Tesla 115-kV	432	25,000	31,308	125	31,345	125
Westley 230-kV			27,331		26,819	

1/ Three-phase for Tesla 500-kV and 230-kV and Westley 230-kV. Line-to-ground for Tesla 115-kV

APPENDIX A

CONTINGENCY LISTS

GWF Tracy Peaker Studies
Category B Contingency List (Express Line to Tesla Configuration)

	From Bus	To Bus	Ckt		Description	
1	30330	30482	"1 "	0	line from RIO OSO 230.00 BRKR to BRKR LOCKFORD 230.00	1
0						
1	30337	30622	"1 "	0	line from GOLDHILL 230.00 BRKR to BRKR EIGHT MI 230.00	2
0						
1	30348	30500	"1 "	0	line from BRIGHTON 230.00 BRKR to BRKR BELLOTA 230.00	3
0						
1	30482	30500	"1 "	0	line from LOCKFORD 230.00 BRKR to BRKR BELLOTA 230.00	4
0						
1	30485	30487	"1 "	0	line from TIGR CRK 230.00 BRKR to BRKR ELECTRA 230.00	5
0						
1	30485	30490	"1 "	0	line from TIGR CRK 230.00 BRKR to BRKR VLLY SPS 230.00	6
0						
1	30487	30500	"1 "	0	line from ELECTRA 230.00 BRKR to BRKR BELLOTA 230.00	7
0						
1	30490	30500	"1 "	0	line from VLLY SPS 230.00 BRKR to BRKR BELLOTA 230.00	8
0						
1	30495	30624	"1 "	0	line from STAGG 230.00 BRKR to BRKR TESLA E 230.00	9
0						
1	30500	30503	"1 "	0	line from BELLOTA 230.00 BRKR to BRKR COLLERVL 230.00	10
0						
1	30500	30503	"2 "	0	line from BELLOTA 230.00 BRKR to BRKR COLLERVL 230.00	11
0						
1	30500	30505	"1 "	0	line from BELLOTA 230.00 BRKR to BRKR WEBER 230.00	12
0						
1	30500	30624	"1 "	0	line from BELLOTA 230.00 BRKR to BRKR TESLA E 230.00	13
0						
1	30500	38206	"1 "	0	line from BELLOTA 230.00 BRKR to (2) COTTLE A 230.00	14
1	38206	37563	"1 "	0	line from COTTLE A 230.00 (2) to BRKR MELONES 230.00	
4	38206	0	"1 "	0	LOAD-DROP COTTLE A 230.00 LOAD==19.23(0.00)	
3	34604	0	"**"	0	Drop Helms unit3 with a loss Bellota - Melones line	
0						
1	30500	38208	"1 "	0	line from BELLOTA 230.00 BRKR to (3) COTTLE B 230.00	15
1	38208	30515	"1 "	0	line from COTTLE B 230.00 (3) to BRKR WARNERVL 230.00	
2	38208	38349	"1 "	0	TRAN from COTTLE B 230.00 (3) to (1) FRANKHMR 9.11	
4	38208	0	"2 "	0	LOAD-DROP COTTLE B 230.00 LOAD==21.32(7.38)	
3	38349	0	"1 "	0	GEN-DROP FRANKHMR 9.11 GEN==3.47(2.50)	
3	34604	0	"**"	0	Drop Helms unit3 with a loss Bellota - Warnerville line	
0						
1	30505	30624	"1 "	0	line from WEBER 230.00 BRKR to BRKR TESLA E 230.00	16
0						
1	30515	30795	"1 "	0	line from WARNERVL 230.00 BRKR to (2) STOREY 2 230.00	
1	30795	30805	"1 "	0	line from STOREY 2 230.00 (2) to BRKR BORDEN 230.00	
4	30795	0	"2 "	0	LOAD-DROP STOREY 2 230.00 LOAD==31.73(0.00)	
3	34604	0	"**"	0	Drop Helms unit3 with a loss Warnerville-Borden line	
0						
1	30515	36950	"1 "	0	line from WARNERVL 230.00 BRKR to BRKR INTAKE 230.00	17
0						
1	30515	36950	"2 "	0	line from WARNERVL 230.00 BRKR to BRKR INTAKE 230.00	18
0						
1	30526	30595	"1 "	0	line from PITSBURG 230.00 BRKR to (3) FLOWIND2 230.00	19
1	30595	30640	"1 "	0	line from FLOWIND2 230.00 (3) to BRKR TESLA F 230.00	
2	30595	33840	"1 "	0	TRAN from FLOWIND2 230.00 (3) to (1) FLOWD3-6 9.11	
4	33840	0	"1 "	0	LOAD-DROP FLOWD3-6 9.11 LOAD==0.65(0.31)	
3	33840	0	"4 "	0	GEN-DROP FLOWD3-6 9.11 GEN==1.13(0.00)	
0						

	From Bus	To Bus	Ckt		Description	
1	30565	30569	"1 "	0	line from BRENTWOD 230.00 BRKR to BRKR KELSO 230.00	20
0						
1	30569	30570	"1 "	0	line from KELSO 230.00 BRKR to (4) USWP-RLF 230.00	21
1	30570	30571	"1 "	0	line from USWP-RLF 230.00 (4) to (2) ALTALAND 230.00	
1	30570	30625	"1 "	0	line from USWP-RLF 230.00 (4) to BRKR TESLA D 230.00	
2	30570	33836	"1 "	0	TRAN from USWP-RLF 230.00 (4) to (1) USWP_4 9.11	
2	30571	33832	"1 "	0	TRAN from ALTALAND 230.00 (2) to (1) COG.CAPT 9.11	
4	33836	0	"1 "	0	LOAD-DROP USWP_4 9.11 LOAD==0.40(0.19)	
3	33836	0	"3 "	0	GEN-DROP USWP_4 9.11 GEN==2.91(0.00)	
3	33832	0	"1 "	0	GEN-DROP COG.CAPT 9.11 GEN==4.30(6.60)	
0						
1	30580	30625	"1 "	0	line from ALTM MDW 230.00 (3) to BRKR TESLA D 230.00	22
1	30580	38610	"1 "	0	line from ALTM MDW 230.00 (3) to BRKR DELTAPMP 230.00	
2	30580	33175	"1 "	0	TRAN from ALTM MDW 230.00 (3) to (1) ALTAMONT 9.11	
3	33175	0	"2 "	0	GEN-DROP ALTAMONT 9.11 GEN==0.19(0.00)	
0						
1	30600	30640	"1 "	0	line from JV ENTER 230.00 (3) to BRKR TESLA F 230.00	23
1	30600	30526	"1 "	0	line from JV ENTER 230.00 (3) to BRKR PITSBURG 230.00	
2	30600	33171	"1 "	0	TRAN from JV ENTER 230.00 (3) to (1) JVE&HOWD 9.11	
3	33171	0	"2 "	0	GEN-DROP JVE&HOWD 9.11 GEN==0.06(0.00)	
0						
1	30622	30495	"1 "	0	line from EIGHT MI 230.00 BRKR to BRKR STAGG 230.00	24
0						
1	30622	30624	"1 "	0	line from EIGHT MI 230.00 BRKR to BRKR TESLA E 230.00	25
0						
1	30624	30630	"1 "	0	line from TESLA E 230.00 BRKR to BRKR NEWARK D 230.00	26
0						
1	30624	30649	"1 "	0	line from TESLA E 230.00 BRKR to BRKR GWFTRACY 230.00	27
0						
1	30624	30670	"1 "	0	line from TESLA E 230.00 BRKR to BRKR WESTLEY 230.00	28
0						
1	30625	30640	"1 "	0	line from TESLA D 230.00 BRKR to BRKR TESLA F 230.00	29
0						
1	30640	30655	"1 "	0	line from TESLA F 230.00 BRKR to (3) ADCC 230.00	30
1	30655	30630	"1 "	0	line from ADCC 230.00 (3) to BRKR NEWARK D 230.00	
2	30655	35310	"1 "	0	TRAN from ADCC 230.00 (3) to (1) LFC FIN+ 9.11	
0						
1	30640	30703	"1 "	0	line from TESLA F 230.00 BRKR to BRKR RAVENSWD 230.00	31
0						
1	30670	30765	"1 "	0	line from WESTLEY 230.00 BRKR to BRKR LOSBANOS 230.00	32
0						
1	33083	33774	"1 "	0	line from MDLRVRJT 60.00 (2) to (3) HRDLNJCT 60.00	33
1	33083	33084	"1 "	0	line from MDLRVRJT 60.00 (2) to (3) BXLR_TAP 60.00	
1	33774	33770	"1 "	0	line from HRDLNJCT 60.00 (3) to BRKR HERDLYN 60.00	
1	33774	33782	"1 "	0	line from HRDLNJCT 60.00 (3) to (1) WEST SDE 60.00	
1	33084	33055	"1 "	0	line from BXLR_TAP 60.00 (3) to (1) BIXLER 60.00	
1	33084	33778	"1 "	0	line from BXLR_TAP 60.00 (3) to (2) MDL_RIVR 60.00	
1	33778	33780	"1 "	0	line from MDL_RIVR 60.00 (2) to (1) MCD_ISLE 60.00	
4	33782	0	"1 "	0	LOAD-DROP WEST SDE 60.00 LOAD==1.90(0.43)	
4	33055	0	"1 "	0	LOAD-DROP BIXLER 60.00 LOAD==2.00(0.97)	
4	33778	0	"1 "	0	LOAD-DROP MDL_RIVR 60.00 LOAD==3.54(0.00)	
4	33780	0	"1 "	0	LOAD-DROP MCD_ISLE 60.00 LOAD==6.24(1.56)	
0						
1	33500	33509	"1 "	0	line from MELNS JA 115.00 (3) to (3) AVENATP1 115.00	34
1	33500	33501	"1 "	0	line from MELNS JA 115.00 (3) to (3) FRGTNTP1 115.00	
1	33500	33932	"1 "	0	line from MELNS JA 115.00 (3) to BRKR MELONES 115.00	
1	33509	33510	"1 "	0	line from AVENATP1 115.00 (3) to (1) AVENA 115.00	
1	33509	33514	"1 "	0	line from AVENATP1 115.00 (3) to BRKR MANTECA 115.00	
1	33501	33502	"1 "	0	line from FRGTNTP1 115.00 (3) to (1) FROGTOWN 115.00	

	From Bus	To Bus	Ckt		Description	
1	33501	33506	"1 "	0	line from FRGTNTP1 115.00 (3) to BRKR STANISLS 115.00	
4	33510	0	"1 "	0	LOAD-DROP AVENA 115.00 LOAD==11.24(0.00)	
4	33502	0	"1 "	0	LOAD-DROP FROGTOWN 115.00 LOAD==6.47(1.48)	
4	33502	0	"2 "	0	LOAD-DROP FROGTOWN 115.00 LOAD==11.22(2.55)	
1	33511	33510	"1 "	1	Switches in Avenan SW 145 to transfer load	
4	33510	0	"**"	1	Restores Load at Avena	
0						
1	33503	33936	"1 "	0	line from FRGTNTP2 115.00 (2) to (3) MELNS JB 115.00	35
1	33503	33504	"1 "	0	line from FRGTNTP2 115.00 (2) to (2) CATARACT 115.00	
1	33936	33932	"1 "	0	line from MELNS JB 115.00 (3) to BRKR MELONES 115.00	
1	33936	33951	"1 "	0	line from MELNS JB 115.00 (3) to (3) VLYHMTP1 115.00	
1	33504	33506	"1 "	0	line from CATARACT 115.00 (2) to BRKR STANISLS 115.00	
1	33951	33516	"1 "	0	line from VLYHMTP1 115.00 (3) to (3) RPN JNCN 115.00	
1	33951	33952	"1 "	0	line from VLYHMTP1 115.00 (3) to (1) VALLY HM 115.00	
1	33516	33514	"1 "	0	line from RPN JNCN 115.00 (3) to BRKR MANTECA 115.00	
1	33516	33520	"1 "	0	line from RPN JNCN 115.00 (3) to (1) RIPON 115.00	
4	33952	0	"1 "	0	LOAD-DROP VALLY HM 115.00 LOAD==4.10(0.93)	
4	33520	0	"2 "	0	LOAD-DROP RIPON 115.00 LOAD==22.22(0.00)	
0						
1	33506	33948	"1 "	0	line from STANISLS 115.00 BRKR to (2) RVRBK J2 115.00	36
1	33948	33953	"1 "	0	line from RVRBK J2 115.00 (2) to (2) VLYHMTP2 115.00	
1	33953	33511	"1 "	0	line from VLYHMTP2 115.00 (2) to (2) AVENATP2 115.00	
1	33511	33514	"1 "	0	line from AVENATP2 115.00 (2) to BRKR MANTECA 115.00	
0						
1	33514	33526	"1 "	0	line from MANTECA 115.00 BRKR to (3) KSSN-JC1 115.00	37
1	33526	33528	"1 "	0	line from KSSN-JC1 115.00 (3) to BRKR KASSON 115.00	
1	33526	33533	"1 "	0	line from KSSN-JC1 115.00 (3) to (2) OWENSTP2 115.00	
1	33533	33535	"1 "	0	line from OWENSTP2 115.00 (2) to (2) SFWY_TP2 115.00	
1	33535	33543	"1 "	0	line from SFWY_TP2 115.00 (2) to (3) AEC_TP2 115.00	
1	33543	33536	"1 "	0	line from AEC_TP2 115.00 (3) to (2) TESLA JB 115.00	
1	33543	33545	"1 "	0	line from AEC_TP2 115.00 (3) to (2) AEC_JCT 115.00	
1	33536	33540	"1 "	0	line from TESLA JB 115.00 (2) to BRKR TESLA 115.00	
1	33545	33547	"1 "	0	line from AEC_JCT 115.00 (2) to (1) AEC_300 115.00	
4	33547	0	"1 "	0	LOAD-DROP AEC_300 115.00 LOAD==3.00(9.54)	
0						
1	33514	33539	"1 "	0	line from MANTECA 115.00 BRKR to (2) CROSRDJ2 115.00	38
1	33539	33518	"1 "	0	line from CROSRDJ2 115.00 (2) to BRKR VIERRA 115.00	
0						
1	33514	33970	"1 "	0	line from MANTECA 115.00 BRKR to (3) INGRM C. 115.00	39
1	33970	33959	"1 "	0	line from INGRM C. 115.00 (3) to (2) TCHRT_T2 115.00	
1	33970	33965	"1 "	0	line from INGRM C. 115.00 (3) to (2) SALADO J 115.00	
1	33959	33540	"1 "	0	line from TCHRT_T2 115.00 (2) to BRKR TESLA 115.00	
1	33965	33964	"1 "	0	line from SALADO J 115.00 (2) to BRKR SALADO 115.00	
4	33970	0	"1 "	0	LOAD-DROP INGRM C. 115.00 LOAD==4.00(1.82)	
0						
1	33518	33522	"1 "	0	line from VIERRA 115.00 BRKR to (3) CROSRDJT 115.00	40
1	33522	33524	"1 "	0	line from CROSRDJT 115.00 (3) to (1) CL AMMNA 115.00	
1	33522	33530	"1 "	0	line from CROSRDJT 115.00 (3) to (3) KSSN-JC2 115.00	
1	33530	33528	"1 "	0	line from KSSN-JC2 115.00 (3) to BRKR KASSON 115.00	
1	33530	33550	"1 "	0	line from KSSN-JC2 115.00 (3) to (2) HJ HEINZ 115.00	
1	33550	33548	"1 "	0	line from HJ HEINZ 115.00 (2) to BRKR TRACY 115.00	
4	33524	0	"1 "	0	LOAD-DROP CL AMMNA 115.00 LOAD==4.01(2.90)	
4	33550	0	"1 "	0	LOAD-DROP HJ HEINZ 115.00 LOAD==0.68(0.42)	
0						
1	33531	33528	"1 "	0	line from OWENSTP1 115.00 (3) to BRKR KASSON 115.00	41
1	33531	33532	"1 "	0	line from OWENSTP1 115.00 (3) to (1) OI GLASS 115.00	
1	33531	33537	"1 "	0	line from OWENSTP1 115.00 (3) to (3) SFWY_TP1 115.00	
1	33537	33534	"1 "	0	line from SFWY_TP1 115.00 (3) to (1) SAFEWAY 115.00	
1	33537	33541	"1 "	0	line from SFWY_TP1 115.00 (3) to (2) AEC_TP1 115.00	

	From Bus	To Bus	Ckt		Description	
1	33541	33538	"1 "	0	line from AEC_TP1 115.00 (2) to (2) TESLA JA 115.00	
1	33538	33540	"1 "	0	line from TESLA JA 115.00 (2) to BRKR TESLA 115.00	
4	33532	0	"1 "	0	LOAD-DROP OI GLASS 115.00 LOAD==11.40(7.07)	
4	33534	0	"1 "	0	LOAD-DROP SAFEWAY 115.00 LOAD==5.28(2.09)	
0						
1	33540	33544	"1 "	0	line from TESLA 115.00 BRKR to (2) ELLS GTY 115.00	42
1	33544	33546	"1 "	0	line from ELLS GTY 115.00 (2) to (2) TRACY JC 115.00	
1	33546	33542	"1 "	0	line from TRACY JC 115.00 (2) to (2) LEPRINO 115.00	
1	33542	33548	"1 "	0	line from LEPRINO 115.00 (2) to BRKR TRACY 115.00	
4	33544	0	"1 "	0	LOAD-DROP ELLS GTY 115.00 LOAD==3.60(1.85)	
4	33542	0	"1 "	0	LOAD-DROP LEPRINO 115.00 LOAD==4.72(3.05)	
0						
1	33540	33568	"1 "	0	line from TESLA 115.00 BRKR to (3) TH.E.DV. 115.00	43
1	33568	33570	"1 "	0	line from TH.E.DV. 115.00 (3) to (3) SPC JCT. 115.00	
2	33568	33806	"1 "	0	TRAN from TH.E.DV. 115.00 (3) to (1) TH.E.DV. 13.80	
1	33570	33572	"1 "	0	line from SPC JCT. 115.00 (3) to (2) SP CMPNY 115.00	
1	33570	33956	"1 "	0	line from SPC JCT. 115.00 (3) to (2) SJ COGEN 115.00	
2	33572	33810	"1 "	0	TRAN from SP CMPNY 115.00 (2) to (1) SP CMPNY 13.80	
2	33956	33808	"1 "	0	TRAN from SJ COGEN 115.00 (2) to (1) SJ COGEN 13.80	
3	33806	0	"1 "	0	GEN-DROP TH.E.DV. 13.80 GEN==19.55(6.00)	
3	33810	0	"1 "	0	GEN-DROP SP CMPNY 13.80 GEN==37.58(21.67)	
3	33808	0	"1 "	0	GEN-DROP SJ COGEN 13.80 GEN==45.40(27.50)	
0						
1	33540	33574	"1 "	0	line from TESLA 115.00 BRKR to (2) LLNL TAP 115.00	44
1	33574	37649	"1 "	0	line from LLNL TAP 115.00 (2) to BRKR LLNLAB 115.00	
0						
1	33540	33576	"1 "	0	line from TESLA 115.00 BRKR to (3) USWP-PAT 115.00	45
1	33576	33578	"1 "	0	line from USWP-PAT 115.00 (3) to (3) FAYETTE 115.00	
2	33576	33842	"1 "	0	TRAN from USWP-PAT 115.00 (3) to (1) PATTERSN 9.11	
1	33578	33580	"1 "	0	line from FAYETTE 115.00 (3) to (2) ALTENRGY 115.00	
2	33578	33844	"1 "	0	TRAN from FAYETTE 115.00 (3) to (1) FAYETTE+ 9.11	
2	33580	33834	"1 "	0	TRAN from ALTENRGY 115.00 (2) to (1) KALINA 9.11	
3	33842	0	"4 "	0	GEN-DROP PATTERSN 9.11 GEN==10.50(0.00)	
0						
1	33540	33961	"1 "	0	line from TESLA 115.00 BRKR to (3) TCHRT_T1 115.00	46
1	33961	33960	"1 "	0	line from TCHRT_T1 115.00 (3) to (3) MDSTO CN 115.00	
1	33961	33963	"1 "	0	line from TCHRT_T1 115.00 (3) to (2) TCHRTJCT 115.00	
1	33960	33962	"1 "	0	line from MDSTO CN 115.00 (3) to (3) SALDO TP 115.00	
2	33960	34054	"1 "	0	TRAN from MDSTO CN 115.00 (3) to (1) MDSTO CN 13.80	
1	33962	33964	"1 "	0	line from SALDO TP 115.00 (3) to BRKR SALADO 115.00	
1	33962	33967	"1 "	0	line from SALDO TP 115.00 (3) to (2) MILER TP 115.00	
1	33967	33966	"1 "	0	line from MILER TP 115.00 (2) to (1) MILLER 115.00	
1	33963	33968	"1 "	0	line from TCHRTJCT 115.00 (2) to (1) TEICHERT 115.00	
4	33966	0	"1 "	0	LOAD-DROP MILLER 115.00 LOAD==3.64(1.76)	
4	33968	0	"1 "	0	LOAD-DROP TEICHERT 115.00 LOAD==4.74(4.57)	
3	34054	0	"1 "	0	GEN-DROP MDSTO CN 13.80 GEN==4.45(6.00)	
0						
1	33552	33553	"1 "	0	line from STCKTNJB 115.00 (2) to BRKR STKTON B 115.00	47
1	33552	33558	"1 "	0	line from STCKTNJB 115.00 (2) to (3) LCKFRDJB 115.00	
1	33558	33562	"1 "	0	line from LCKFRDJB 115.00 (3) to BRKR BELLOTA 115.00	
1	33558	33564	"1 "	0	line from LCKFRDJB 115.00 (3) to BRKR LOCKFORD 115.00	
4	33553	0	"3 "	0	LOAD-DROP STKTON B 115.00 LOAD==26.71(0.00)	
1	33555	33553	"1 "	1	Switches in Stockton 'A' SW 177 to transfer load	
4	33553	0	"**"	1	Restore Load at Stockton 'A' Bk 3	
0						
1	33554	33555	"1 "	0	line from STCKTNJA 115.00 (2) to BRKR STKTON A 115.00	48
1	33554	33556	"1 "	0	line from STCKTNJA 115.00 (2) to (3) STN COGN 115.00	
1	33556	33560	"1 "	0	line from STN COGN 115.00 (3) to (2) LCKFRDJA 115.00	
1	33556	33958	"1 "	0	line from STN COGN 115.00 (3) to (2) CPC STCN 115.00	

	From Bus	To Bus	Ckt		Description	
1	33560	33562	"1 "	0	line from LCKFRDJA 115.00 (2) to BRKR BELLOTA 115.00	
2	33958	33814	"1 "	0	TRAN from CPC STCN 115.00 (2) to (1) CPC STCN 12.47	
4	33555	0	"4 "	0	LOAD-DROP STKTON A 115.00 LOAD==17.13(0.76)	
4	33555	0	"5 "	0	LOAD-DROP STKTON A 115.00 LOAD==17.47(3.17)	
4	33814	0	"1 "	0	LOAD-DROP CPC STCN 12.47 LOAD==4.90(1.10)	
3	33814	0	"1 "	0	GEN-DROP CPC STCN 12.47 GEN==48.88(22.44)	
1	33555	33553	"1 "	1	Switches in Stockton 'A' SW 177 to transfer load	
4	33555	0	"**"	1	Restore Load at Stockton 'A' Bks 4&6	
0						
1	33561	33562	"1 "	0	line from BLLTAJCT 115.00 (3) to BRKR BELLOTA 115.00	49
1	33561	33564	"1 "	0	line from BLLTAJCT 115.00 (3) to BRKR LOCKFORD 115.00	
1	33561	33565	"1 "	0	line from BLLTAJCT 115.00 (3) to (2) CMNCHETP 115.00	
1	33565	33566	"1 "	0	line from CMNCHETP 115.00 (2) to BRKR CAMANCHE 115.00	
0						
1	33562	33946	"1 "	0	line from BELLOTA 115.00 BRKR to (2) RVRBK J1 115.00	50
1	33946	33944	"1 "	0	line from RVRBK J1 115.00 (2) to BRKR RVRBANK 115.00	
0						
1	33562	33950	"1 "	0	line from BELLOTA 115.00 BRKR to (3) RVRBK TP 115.00	51
1	33950	33934	"1 "	0	line from RVRBK TP 115.00 (3) to (3) TULLOCH 115.00	
1	33950	33944	"1 "	0	line from RVRBK TP 115.00 (3) to BRKR RVRBANK 115.00	
1	33934	33932	"1 "	0	line from TULLOCH 115.00 (3) to BRKR MELONES 115.00	
2	33934	34076	"1 "	0	TRAN from TULLOCH 115.00 (3) to (1) TULLOCH 6.90	
3	34076	0	"1 "	0	GEN-DROP TULLOCH 6.90 GEN==8.00(1.00)	
3	34076	0	"2 "	0	GEN-DROP TULLOCH 6.90 GEN==8.00(1.00)	
0						
1	33582	33584	"1 "	0	line from SLT SPRG 115.00 BRKR to BRKR TIGR CRK 115.00	52
0						
1	33600	37582	"1 "	0	line from HERDLYN 70.00 (2) to BRKR TRACY YG 70.00	53
2	33600	33770	"2 "	0	TRAN from HERDLYN 70.00 (2) to BRKR HERDLYN 60.00	
0						
1	33602	33670	"1 "	0	line from NEWARKS 60.00 (2) to BRKR STCKTN A 60.00	54
2	33602	33815	"1 "	0	TRAN from NEWARKS 60.00 (2) to (1) STKTN SR 13.80	
4	33602	0	"1 "	0	LOAD-DROP NEWARKS 60.00 LOAD==9.01(4.86)	
3	33815	0	"1 "	0	GEN-DROP STKTN SR 13.80 GEN==22.00(-2.66)	
0						
1	33604	33606	"1 "	0	line from WEST PNT 60.00 (2) to (3) P.GRVEJ. 60.00	55
2	33604	33820	"1 "	0	TRAN from WEST PNT 60.00 (2) to (1) WEST PNT 11.50	
1	33606	33607	"1 "	0	line from P.GRVEJ. 60.00 (3) to (2) ELECTRAJ 60.00	
1	33606	33608	"1 "	0	line from P.GRVEJ. 60.00 (3) to (1) PNE GRVE 60.00	
1	33607	33610	"1 "	0	line from ELECTRAJ 60.00 (2) to BRKR VLLY SPS 60.00	
4	33604	0	"1 "	0	LOAD-DROP WEST PNT 60.00 LOAD==2.78(0.63)	
4	33604	0	"3 "	0	LOAD-DROP WEST PNT 60.00 LOAD==3.39(0.77)	
4	33607	0	"1 "	0	LOAD-DROP ELECTRAJ 60.00 LOAD==9.04(2.06)	
4	33608	0	"1 "	0	LOAD-DROP PNE GRVE 60.00 LOAD==4.87(0.00)	
4	33608	0	"2 "	0	LOAD-DROP PNE GRVE 60.00 LOAD==7.99(1.82)	
3	33820	0	"1 "	0	GEN-DROP WEST PNT 11.50 GEN==15.00(3.00)	
0						
1	33610	33612	"1 "	0	line from VLLY SPS 60.00 BRKR to (2) N BRANCH 60.00	56
1	33612	33614	"1 "	0	line from N BRANCH 60.00 (2) to BRKR CAL CMNT 60.00	
4	33612	0	"1 "	0	LOAD-DROP N BRANCH 60.00 LOAD==4.35(0.00)	
4	33614	0	"1 "	0	LOAD-DROP CAL CMNT 60.00 LOAD==12.83(2.98)	
0						
1	33610	33619	"1 "	0	line from VLLY SPS 60.00 BRKR to (3) AMFOR_SW 60.00	57
1	33619	33616	"1 "	0	line from AMFOR_SW 60.00 (3) to BRKR MARTELL 60.00	
1	33619	33620	"1 "	0	line from AMFOR_SW 60.00 (3) to (2) AM FORST 60.00	
2	33620	33826	"1 "	0	TRAN from AM FORST 60.00 (2) to (1) MARTELL 9.11	
4	33620	0	"1 "	0	LOAD-DROP AM FORST 60.00 LOAD==6.76(6.33)	
3	33826	0	"1 "	0	GEN-DROP MARTELL 9.11 GEN==11.00(8.76)	
0						

	From Bus	To Bus	Ckt		Description	
1	33610	33630	"1 "	0	line from VLLY SPS 60.00 BRKR to (2) PARDEE A 60.00	58
2	33630	33848	"1 "	0	TRAN from PARDEE A 60.00 (2) to (1) PARDE 2 7.20	
3	33848	0	"1 "	0	GEN-DROP PARDE 2 7.20 GEN==8.00(-1.50)	
0						
1	33610	33634	"1 "	0	line from VLLY SPS 60.00 BRKR to (3) PRDE JCT 60.00	59
1	33634	33626	"1 "	0	line from PRDE JCT 60.00 (3) to (3) I.NRGYJT 60.00	
2	33634	33846	"1 "	0	TRAN from PRDE JCT 60.00 (3) to (1) PRDE 1-3 7.20	
1	33626	33622	"1 "	0	line from I.NRGYJT 60.00 (3) to (2) CLAY 60.00	
1	33626	33628	"1 "	0	line from I.NRGYJT 60.00 (3) to (2) I.ENERGY 60.00	
1	33622	33623	"1 "	0	line from CLAY 60.00 (2) to (3) INE_TP 60.00	
1	33623	33616	"1 "	0	line from INE_TP 60.00 (3) to BRKR MARTELL 60.00	
1	33623	33624	"1 "	0	line from INE_TP 60.00 (3) to (1) INE PRSN 60.00	
2	33628	33816	"1 "	0	TRAN from I.ENERGY 60.00 (2) to (1) I.ENERGY 12.00	
4	33622	0	"1 "	0	LOAD-DROP CLAY 60.00 LOAD==8.27(0.00)	
4	33624	0	"1 "	0	LOAD-DROP INE PRSN 60.00 LOAD==11.01(2.51)	
3	33846	0	"1 "	0	GEN-DROP PRDE 1-3 7.20 GEN==8.00(1.46)	
3	33846	0	"2 "	0	GEN-DROP PRDE 1-3 7.20 GEN==8.00(1.46)	
3	33816	0	"1 "	0	GEN-DROP I.ENERGY 12.00 GEN==14.50(5.55)	
1	33616	33618	"1 "	0	Must include Martell - Oleda in this outage	
4	33618	0	"**"	0	LOAD-DROP OLETA 60.00	
0						
1	33610	33636	"1 "	0	line from VLLY SPS 60.00 BRKR to (3) N.HGN JT 60.00	60
1	33636	33638	"1 "	0	line from N.HGN JT 60.00 (3) to (2) N.HOGAN 60.00	
1	33636	33640	"1 "	0	line from N.HGN JT 60.00 (3) to (1) CORRAL 60.00	
2	33638	38365	"1 "	0	TRAN from N.HOGAN 60.00 (2) to (1) N.HGN DM 12.00	
4	33640	0	"1 "	0	LOAD-DROP CORRAL 60.00 LOAD==7.60(1.74)	
4	33640	0	"2 "	0	LOAD-DROP CORRAL 60.00 LOAD==7.26(0.00)	
3	38365	0	"1 "	0	GEN-DROP N.HGN DM 12.00 GEN==2.20(0.07)	
3	38365	0	"2 "	0	GEN-DROP N.HGN DM 12.00 GEN==1.10(0.03)	
0						
1	33642	33644	"1 "	0	line from LINDEN 60.00 (1) to (2) MRMN JCT 60.00	61
1	33644	33646	"1 "	0	line from MRMN JCT 60.00 (2) to (2) MORMON 60.00	
1	33646	33650	"1 "	0	line from MORMON 60.00 (2) to BRKR WEBER 1 60.00	
4	33642	0	"1 "	0	LOAD-DROP LINDEN 60.00 LOAD==16.30(3.64)	
4	33646	0	"1 "	0	LOAD-DROP MORMON 60.00 LOAD==5.39(0.54)	
1	33642	33640	"1 "	1	Switches in Linden SW 27 to transfer load	
4	33642	0	"**"	1	Restore Load and Linden	
0						
1	33650	33672	"1 "	0	line from WEBER 1 60.00 BRKR to (2) CHRTRWYS 60.00	62
1	33672	33673	"1 "	0	line from CHRTRWYS 60.00 (2) to (2) CAL CEDA 60.00	
1	33673	33688	"1 "	0	line from CAL CEDA 60.00 (2) to (3) ROB-LRNR 60.00	
1	33688	33687	"1 "	0	line from ROB-LRNR 60.00 (3) to (2) STKTN WW 60.00	
1	33688	33696	"1 "	0	line from ROB-LRNR 60.00 (3) to (3) COG.NTNL 60.00	
1	33687	33689	"1 "	0	line from STKTN WW 60.00 (2) to (1) LEARNER 60.00	
1	33696	33690	"1 "	0	line from COG.NTNL 60.00 (3) to (2) ROGH-RDY 60.00	
2	33696	33818	"1 "	0	TRAN from COG.NTNL 60.00 (3) to (1) COG.NTNL 12.00	
1	33690	33692	"1 "	0	line from ROGH-RDY 60.00 (2) to (2) CHANNEL 60.00	
1	33692	33694	"1 "	0	line from CHANNEL 60.00 (2) to (1) CHNNL JT 60.00	
4	33673	0	"1 "	0	LOAD-DROP CAL CEDA 60.00 LOAD==3.15(2.78)	
4	33687	0	"1 "	0	LOAD-DROP STKTN WW 60.00 LOAD==3.40(0.85)	
4	33690	0	"1 "	0	LOAD-DROP ROGH-RDY 60.00 LOAD==5.49(0.35)	
4	33692	0	"1 "	0	LOAD-DROP CHANNEL 60.00 LOAD==7.98(0.00)	
3	33687	0	"1 "	0	GEN-DROP STKTN WW 60.00 GEN==1.50(0.15)	
3	33818	0	"1 "	0	GEN-DROP COG.NTNL 12.00 GEN==34.97(20.71)	
1	33648	33650	"1 "	0	Must include Weber - Dana in this outage	
1	33648	33656	"1 "	0	Must include Dana - Cargill in this outage	
1	33656	33660	"1 "	0	Must include Cargill - JM in this outage	
1	33660	33698	"1 "	0	Must include JM - French Camp in this outage	
1	33698	33700	"1 "	0	Must include French Camp - French Camp Jct in this outage	

	From Bus	To Bus	Ckt		Description	
4	33648	0	"***"	0	LOAD-DROP DANA 60.00	
4	33656	0	"***"	0	LOAD-DROP CARGILL 60.00	
4	33660	0	"***"	0	LOAD-DROP JM 60.00	
4	33698	0	"***"	0	LOAD-DROP FRNCH CP 60.00	
0						
1	33654	33664	"1 "	0	line from SNTA FEA 60.00 (3) to (2) LIPTON 60.00	63
1	33654	33670	"1 "	0	line from SNTA FEA 60.00 (3) to BRKR STCKTN A 60.00	
1	33654	33662	"1 "	0	line from SNTA FEA 60.00 (3) to BRKR WEBER 2 60.00	
1	33664	33666	"1 "	0	line from LIPTON 60.00 (2) to (2) CHEROKEE 60.00	
1	33666	33668	"1 "	0	line from CHEROKEE 60.00 (2) to (1) WATERLOO 60.00	
4	33664	0	"1 "	0	LOAD-DROP LIPTON 60.00 LOAD==4.31(3.12)	
4	33666	0	"1 "	0	LOAD-DROP CHEROKEE 60.00 LOAD==7.43(0.00)	
4	33668	0	"1 "	0	LOAD-DROP WATERLOO 60.00 LOAD==9.32(0.72)	
0						
1	33658	33670	"1 "	0	line from SNTA FEB 60.00 (3) to BRKR STCKTN A 60.00	64
1	33658	33678	"1 "	0	line from SNTA FEB 60.00 (3) to (2) MONARCH 60.00	
1	33658	33662	"1 "	0	line from SNTA FEB 60.00 (3) to BRKR WEBER 2 60.00	
1	33678	33684	"1 "	0	line from MONARCH 60.00 (2) to (2) HARDING 60.00	
1	33684	33686	"1 "	0	line from HARDING 60.00 (2) to (1) STCKTNAR 60.00	
4	33678	0	"2 "	0	LOAD-DROP MONARCH 60.00 LOAD==4.56(1.04)	
4	33684	0	"1 "	0	LOAD-DROP HARDING 60.00 LOAD==5.13(1.17)	
4	33684	0	"2 "	0	LOAD-DROP HARDING 60.00 LOAD==5.13(1.17)	
4	33686	0	"1 "	0	LOAD-DROP STCKTNAR 60.00 LOAD==2.21(0.51)	
0						
1	33662	33674	"1 "	0	line from WEBER 2 60.00 BRKR to (4) HAZLTN J 60.00	65
1	33674	33670	"1 "	0	line from HAZLTN J 60.00 (4) to BRKR STCKTN A 60.00	
1	33674	33676	"1 "	0	line from HAZLTN J 60.00 (4) to (1) E.STCKTN 60.00	
1	33674	33681	"1 "	0	line from HAZLTN J 60.00 (4) to (2) N.ST_SW 60.00	
1	33681	33682	"1 "	0	line from N.ST_SW 60.00 (2) to (2) SUMIDEN 60.00	
1	33682	33680	"1 "	0	line from SUMIDEN 60.00 (2) to (2) OAK PARK 60.00	
1	33680	33712	"1 "	0	line from OAK PARK 60.00 (2) to (1) WESTLANE 60.00	
4	33676	0	"1 "	0	LOAD-DROP E.STCKTN 60.00 LOAD==3.26(0.75)	
4	33676	0	"2 "	0	LOAD-DROP E.STCKTN 60.00 LOAD==2.33(0.53)	
4	33676	0	"3 "	0	LOAD-DROP E.STCKTN 60.00 LOAD==11.22(1.00)	
4	33682	0	"1 "	0	LOAD-DROP SUMIDEN 60.00 LOAD==3.00(1.94)	
4	33680	0	"1 "	0	LOAD-DROP OAK PARK 60.00 LOAD==3.27(0.75)	
4	33712	0	"1 "	0	LOAD-DROP WESTLANE 60.00 LOAD==8.38(0.00)	
0						
1	33693	33704	"1 "	0	line from STAGG JT 60.00 (2) to BRKR STAGG 60.00	66
1	33693	33719	"1 "	0	line from STAGG JT 60.00 (2) to (3) TERMNS J 60.00	
1	33719	33720	"1 "	0	line from TERMNS J 60.00 (3) to (1) TERMNOUS 60.00	
1	33719	33721	"1 "	0	line from TERMNS J 60.00 (3) to (2) SEBASTIA 60.00	
1	33721	33722	"1 "	0	line from SEBASTIA 60.00 (2) to (2) NW HPE J 60.00	
1	33722	33723	"1 "	0	line from NW HPE J 60.00 (2) to (1) NEW HOPE 60.00	
4	33720	0	"1 "	0	LOAD-DROP TERMNOUS 60.00 LOAD==5.50(1.25)	
4	33721	0	"1 "	0	LOAD-DROP SEBASTIA 60.00 LOAD==2.28(1.71)	
4	33723	0	"1 "	0	LOAD-DROP NEW HOPE 60.00 LOAD==2.54(0.58)	
0						
1	33703	33702	"1 "	0	line from LOUISJCT 60.00 (3) to (1) GRONMYER 60.00	67
1	33703	33746	"1 "	0	line from LOUISJCT 60.00 (3) to BRKR LOUISE 60.00	
1	33703	33742	"1 "	0	line from LOUISJCT 60.00 (3) to BRKR MANTECA 60.00	
4	33702	0	"1 "	0	LOAD-DROP GRONMYER 60.00 LOAD==4.20(0.96)	
0						
1	33704	33706	"1 "	0	line from STAGG 60.00 BRKR to BRKR CNTRY CB 60.00	68
0						
1	33704	33706	"2 "	0	line from STAGG 60.00 BRKR to BRKR CNTRY CB 60.00	69
0						
1	33704	33714	"1 "	0	line from STAGG 60.00 BRKR to BRKR HAMMER 60.00	70
0						

	From Bus	To Bus	Ckt		Description	
1	33706	33708	"1 "	0	line from CNTRY CB 60.00 BRKR to (2) UOP 60.00	71
1	33708	33710	"1 "	0	line from UOP 60.00 (2) to (2) WSTLNESW 60.00	
1	33710	33716	"1 "	0	line from WSTLNESW 60.00 (2) to (3) HMMR JCT 60.00	
1	33716	33714	"1 "	0	line from HMMR JCT 60.00 (3) to BRKR HAMMER 60.00	
1	33716	33717	"1 "	0	line from HMMR JCT 60.00 (3) to (3) MORADAJT 60.00	
1	33717	33718	"1 "	0	line from MORADAJT 60.00 (3) to (1) METTLER 60.00	
1	33717	33740	"1 "	0	line from MORADAJT 60.00 (3) to BRKR MSHR 60V 60.00	
4	33708	0	"1 "	0	LOAD-DROP UOP 60.00 LOAD==4.86(3.64)	
4	33718	0	"3 "	0	LOAD-DROP METTLER 60.00 LOAD==6.91(0.00)	
4	33740	0	"1 "	0	LOAD-DROP MSHR 60V 60.00 LOAD==13.52(3.09)	
4	33740	0	"2 "	0	LOAD-DROP MSHR 60V 60.00 LOAD==25.74(5.87)	
1	33738	33740	"1 "	1	Switches in Mosher SW 67 to transfer load	
4	33740	0	"2 "	1	Restore Mosher Bank 2 load	
0						
1	33724	33726	"1 "	0	line from LOCKEFRD 60.00 BRKR to (2) VICTOR 60.00	72
1	33726	33731	"1 "	0	line from VICTOR 60.00 (2) to (2) WODBRG J 60.00	
1	33731	33735	"1 "	0	line from WODBRG J 60.00 (2) to (2) INDSTR J 60.00	
1	33735	38060	"1 "	0	line from INDSTR J 60.00 (2) to BRKR INDUSTRL 60.00	
4	33726	0	"1 "	0	LOAD-DROP VICTOR 60.00 LOAD==1.17(0.27)	
4	33726	0	"2 "	0	LOAD-DROP VICTOR 60.00 LOAD==1.49(0.34)	
0						
1	33724	33736	"1 "	0	line from LOCKEFRD 60.00 BRKR to (2) LODI JCT 60.00	73
1	33736	33729	"1 "	0	line from LODI JCT 60.00 (2) to BRKR LODI AUX 60.00	
0						
1	33724	33738	"1 "	0	line from LOCKEFRD 60.00 BRKR to (1) WATRLJCT 60.00	74
0						
1	33724	38060	"1 "	0	line from LOCKEFRD 60.00 BRKR to BRKR INDUSTRL 60.00	75
0						
1	33725	33732	"1 "	0	line from LOCKFRD1 60.00 BRKR to (2) COLONY 60.00	76
1	33732	33734	"1 "	0	line from COLONY 60.00 (2) to (2) CLNY JCT 60.00	
1	33734	33728	"1 "	0	line from CLNY JCT 60.00 (2) to BRKR LODI 60.00	
4	33732	0	"2 "	0	LOAD-DROP COLONY 60.00 LOAD==4.20(0.96)	
0						
1	33737	33727	"1 "	0	line from WINERY J 60.00 (2) to (1) MONDAVI 60.00	77
1	33737	33728	"1 "	0	line from WINERY J 60.00 (2) to BRKR LODI 60.00	
4	33727	0	"1 "	0	LOAD-DROP MONDAVI 60.00 LOAD==3.87(3.31)	
0						
1	33743	33742	"1 "	0	line from LEE_JCT 60.00 (2) to BRKR MANTECA 60.00	78
1	33743	33766	"1 "	0	line from LEE_JCT 60.00 (2) to (2) MNTCA JT 60.00	
1	33766	33768	"1 "	0	line from MNTCA JT 60.00 (2) to (2) BNTA CRB 60.00	
1	33768	34000	"1 "	0	line from BNTA CRB 60.00 (2) to (1) WESTLEY 60.00	
4	33768	0	"1 "	0	LOAD-DROP BNTA CRB 60.00 LOAD==3.34(0.76)	
4	34000	0	"1 "	0	LOAD-DROP WESTLEY 60.00 LOAD==8.28(1.88)	
4	34000	0	"3 "	0	LOAD-DROP WESTLEY 60.00 LOAD==6.12(1.40)	
1	33742	33752	"1 "	0	Must include Manteca - Lanthrop Jct in this outage	
0						
1	33746	33748	"1 "	0	line from LOUISE 60.00 BRKR to (2) MSSDLESW 60.00	79
1	33748	33750	"1 "	0	line from MSSDLESW 60.00 (2) to (2) CALVO 60.00	
1	33750	33756	"1 "	0	line from CALVO 60.00 (2) to BRKR KASSON 60.00	
4	33750	0	"1 "	0	LOAD-DROP CALVO 60.00 LOAD==1.70(0.39)	
0						
1	33756	33758	"1 "	0	line from KASSON 60.00 BRKR to BRKR BANTA 60.00	80
4	33758	0	"1 "	0	LOAD-DROP BANTA 60.00 LOAD==8.26(0.74)	
0						
1	33756	33760	"1 "	0	line from KASSON 60.00 BRKR to (3) BNTA JCT 60.00	81
1	33760	33762	"1 "	0	line from BNTA JCT 60.00 (3) to (2) LYOTH-SP 60.00	
1	33760	33764	"1 "	0	line from BNTA JCT 60.00 (3) to (1) CARBONA 60.00	
1	33762	33763	"1 "	0	line from LYOTH-SP 60.00 (2) to (1) CRBNA JC 60.00	
4	33762	0	"1 "	0	LOAD-DROP LYOTH-SP 60.00 LOAD==4.20(0.96)	

	From Bus	To Bus	Ckt		Description	
4	33764	0	"1 "	0	LOAD-DROP CARBONA 60.00 LOAD==24.96(5.69)	
4	33764	0	"2 "	0	LOAD-DROP CARBONA 60.00 LOAD==7.58(1.73)	
0						
1	33770	33772	"1 "	0	line from HERDLYN 60.00 BRKR to (2) B.BTHNY- 60.00	82
1	33772	33773	"1 "	0	line from B.BTHNY- 60.00 (2) to (2) ALTA-CGE 60.00	
1	33773	33775	"1 "	0	line from ALTA-CGE 60.00 (2) to (2) TOSCO-PP 60.00	
1	33775	33776	"1 "	0	line from TOSCO-PP 60.00 (2) to (2) SOUTH BY 60.00	
1	33776	35202	"1 "	0	line from SOUTH BY 60.00 (2) to (3) USWP-WKR 60.00	
1	35202	35211	"1 "	0	line from USWP-WKR 60.00 (3) to (1) ALTAMONT 60.00	
2	35202	35314	"1 "	0	TRAN from USWP-WKR 60.00 (3) to (1) WALKER+ 9.11	
4	33772	0	"1 "	0	LOAD-DROP B.BTHNY- 60.00 LOAD==1.94(0.44)	
4	33775	0	"1 "	0	LOAD-DROP TOSCO-PP 60.00 LOAD==0.97(0.91)	
4	33776	0	"1 "	0	LOAD-DROP SOUTH BY 60.00 LOAD==23.00(0.00)	
3	33773	0	"1 "	0	GEN-DROP ALTA-CGE 60.00 GEN==4.20(-1.00)	
3	35314	0	"1 "	0	GEN-DROP WALKER+ 9.11 GEN==0.49(0.00)	
0						
1	33800	38100	"1 "	0	line from SALT SPS 21.00 BRKR to (2) SPICER 21.00	83
2	38100	38122	"1 "	0	TRAN from SPICER 21.00 (2) to (1) NEWSPICE 4.16	
3	38122	0	"1 "	0	GEN-DROP NEWSPICE 4.16 GEN==3.33(-4.80)	
0						
1	33900	33902	"1 "	0	line from DONNELLS 115.00 (2) to (3) BRDSLY J 115.00	84
2	33900	34058	"1 "	0	TRAN from DONNELLS 115.00 (2) to (1) DONNELLS 13.80	
1	33902	33904	"1 "	0	line from BRDSLY J 115.00 (3) to (2) BEARDSLY 115.00	
1	33902	33912	"1 "	0	line from BRDSLY J 115.00 (3) to (3) SPRNG GJ 115.00	
2	33904	34074	"1 "	0	TRAN from BEARDSLY 115.00 (2) to (1) BEARDSLY 6.90	
1	33912	33910	"1 "	0	line from SPRNG GJ 115.00 (3) to (3) SNDBR JT 115.00	
1	33912	33914	"1 "	0	line from SPRNG GJ 115.00 (3) to (2) MI-WUK 115.00	
1	33910	33906	"1 "	0	line from SNDBR JT 115.00 (3) to BRKR SPRNG GP 115.00	
1	33910	33908	"1 "	0	line from SNDBR JT 115.00 (3) to (2) SANDBAR 115.00	
2	33908	34060	"1 "	0	TRAN from SANDBAR 115.00 (2) to (1) SANDBAR 13.80	
1	33914	33917	"1 "	0	line from MI-WUK 115.00 (2) to (2) FBERBORD 115.00	
1	33917	33916	"1 "	0	line from FBERBORD 115.00 (2) to BRKR CURTISS 115.00	
4	33914	0	"1 "	0	LOAD-DROP MI-WUK 115.00 LOAD==7.91(1.13)	
3	34058	0	"1 "	0	GEN-DROP DONNELLS 13.80 GEN==63.48(11.89)	
3	34074	0	"1 "	0	GEN-DROP BEARDSLY 6.90 GEN==10.46(0.78)	
3	34060	0	"1 "	0	GEN-DROP SANDBAR 13.80 GEN==15.01(1.27)	
3	33917	0	"1 "	0	GEN-DROP FBERBORD 115.00 GEN==3.20(-2.22)	
0						
1	33916	33920	"1 "	0	line from CURTISS 115.00 BRKR to (2) RCTRK J. 115.00	85
1	33920	33926	"1 "	0	line from RCTRK J. 115.00 (2) to (3) CH.STNJT 115.00	
1	33926	33928	"1 "	0	line from CH.STNJT 115.00 (3) to (2) CH.STN 115.00	
1	33926	33930	"1 "	0	line from CH.STNJT 115.00 (3) to (2) PEORIA 115.00	
2	33928	34050	"1 "	0	TRAN from CH.STN 115.00 (2) to (1) CH.STN. 13.80	
1	33930	33932	"1 "	0	line from PEORIA 115.00 (2) to BRKR MELONES 115.00	
4	33928	0	"SP"	0	LOAD-DROP CH.STN 115.00 LOAD==3.37(2.98)	
4	33930	0	"1 "	0	LOAD-DROP PEORIA 115.00 LOAD==10.81(1.09)	
3	34050	0	"1 "	0	GEN-DROP CH.STN. 13.80 GEN==10.65(11.00)	
0						
1	33932	33922	"1 "	0	line from MELONES 115.00 BRKR to (1) R.TRACK 115.00	86
4	33922	0	"1 "	0	LOAD-DROP R.TRACK 115.00 LOAD==12.33(2.44)	
0						
1	34002	34004	"1 "	0	line from SALADO 60.00 BRKR to (2) PTRSNFRZ 60.00	87
1	34004	34006	"1 "	0	line from PTRSNFRZ 60.00 (2) to BRKR PATTERSN 60.00	
4	34004	0	"1 "	0	LOAD-DROP PTRSNFRZ 60.00 LOAD==10.80(8.38)	
0						
1	34002	34008	"1 "	0	line from SALADO 60.00 BRKR to (3) STNSLSRP 60.00	88
1	34008	34016	"1 "	0	line from STNSLSRP 60.00 (3) to (2) MEDLIN J 60.00	
2	34008	34056	"1 "	0	TRAN from STNSLSRP 60.00 (3) to (1) STNSLSRP 13.80	
1	34016	34018	"1 "	0	line from MEDLIN J 60.00 (2) to (3) NWMN JCT 60.00	

	From Bus	To Bus	Ckt		Description	
1	34018	34014	"1 "	0	line from NWMN JCT 60.00 (3) to BRKR NEWMAN 60.00	
1	34018	34020	"1 "	0	line from NWMN JCT 60.00 (3) to (1) GUSTINE 60.00	
4	34020	0	"1 "	0	LOAD-DROP GUSTINE 60.00 LOAD==7.27(0.98)	
4	34020	0	"2 "	0	LOAD-DROP GUSTINE 60.00 LOAD==8.28(0.00)	
3	34056	0	"1 "	0	GEN-DROP STNSLSRP 13.80 GEN==13.65(14.00)	
1	34012	34020	"1 "	1	Switches in Gustine SW 19 to transfer load	
4	34020	0	"**"	1	Restore Load at Gustine	
0						
1	34006	34010	"1 "	0	line from PATTERSN 60.00 BRKR to (3) CRWS LDJ 60.00	89
1	34010	34012	"1 "	0	line from CRWS LDJ 60.00 (3) to (2) GUSTN JT 60.00	
1	34010	34017	"1 "	0	line from CRWS LDJ 60.00 (3) to (1) CRWS LDG 60.00	
1	34012	34014	"1 "	0	line from GUSTN JT 60.00 (2) to BRKR NEWMAN 60.00	
4	34017	0	"1 "	0	LOAD-DROP CRWS LDG 60.00 LOAD==3.97(0.31)	
1	34016	34017	"1 "	1	Switches in Crows Landing SW 57 to transfer load	
4	34017	0	"**"	1	Restore Load at Crows Landing	
0						
1	37016	30500	"1 "	0	line from RNCHSECO 230.00 BRKR to BRKR BELLOTA 230.00	90
0						
1	37016	30500	"2 "	0	line from RNCHSECO 230.00 BRKR to BRKR BELLOTA 230.00	91
0						
1	37585	30625	"1 "	0	line from TRCY PMP 230.00 BRKR to BRKR TESLA D 230.00	92
0						
1	37585	30625	"2 "	0	line from TRCY PMP 230.00 BRKR to BRKR TESLA D 230.00	93
0						
1	37585	30670	"1 "	0	line from TRCY PMP 230.00 BRKR to BRKR WESTLEY 230.00	94
0						
1	38000	30622	"1 "	0	line from LODI 230.00 BRKR to BRKR EIGHT MI 230.00	95
0						
1	38060	33729	"1 "	0	line from INDUSTRL 60.00 BRKR to BRKR LODI AUX 60.00	96
0						
1	38060	33730	"1 "	0	line from INDUSTRL 60.00 BRKR to (2) GENMILLS 60.00	97
2	33730	33830	"1 "	0	TRAN from GENMILLS 60.00 (2) to (1) GEN.MILL 9.11	
3	33830	0	"1 "	0	GEN-DROP GEN.MILL 9.11 GEN==2.50(1.50)	
0						
1	38204	30670	"1 "	0	line from PRKR MID 230.00 BRKR to BRKR WESTLEY 230.00	98
0						
1	38204	38202	"1 "	0	line from PRKR MID 230.00 BRKR to (3) PARKER2M 230.00	99
2	38202	38250	"1 "	0	TRAN from PARKER2M 230.00 (3) to BRKR PARKER 69.00	
2	38202	38360	"1 "	0	TRAN from PARKER2M 230.00 (3) to (1) PARKER2T 12.00	
0						
1	38204	38210	"1 "	0	line from PRKR MID 230.00 BRKR to (3) PARKER1M 230.00	100
2	38210	38250	"1 "	0	TRAN from PARKER1M 230.00 (3) to BRKR PARKER 69.00	
2	38210	38358	"1 "	0	TRAN from PARKER1M 230.00 (3) to (1) PARKER1T 12.00	
0						
1	38204	38400	"1 "	0	line from PRKR MID 230.00 BRKR to BRKR WALNT 230.00	101
0						
1	38400	30670	"1 "	0	line from WALNT 230.00 BRKR to BRKR WESTLEY 230.00	102
0						
2	33724	30482	"2 "	0	TRAN from LOCKEFRD 60.00 BRKR to (3) LOCKFORD 230.00	103
1	30482	30330	"1 "	0	line from LOCKFORD 230.00 BRKR to BRKR RIO OSO 230.00	
1	30482	30500	"1 "	0	line from LOCKFORD 230.00 BRKR to BRKR BELLOTA 230.00	
0						
2	30485	30486	"1 "	0	TRAN from TIGR CRK 230.00 (3) to (3) TIGR CKM 230.00	104
1	30485	30487	"1 "	0	line from TIGR CRK 230.00 BRKR to BRKR ELECTRA 230.00	
1	30485	30490	"1 "	0	line from TIGR CRK 230.00 BRKR to BRKR VLLY SPS 230.00	
2	30486	33584	"1 "	0	TRAN from TIGR CKM 230.00 (3) to (2) TIGR CRK 115.00	
2	30486	33822	"1 "	0	TRAN from TIGR CKM 230.00 (3) to (1) TIGR CRK 11.00	
1	33584	33582	"1 "	0	line from TIGR CRK 115.00 BRKR to BRKR SLT SPRG 115.00	
4	33822	0	"1 "	0	LOAD-DROP TIGR CRK 11.00 LOAD==0.18(0.04)	

	From Bus	To Bus	Ckt		Description	
3	33822	0	"1 "	0	GEN-DROP TIGR CRK 11.00 GEN==27.00(6.85)	
3	33822	0	"2 "	0	GEN-DROP TIGR CRK 11.00 GEN==27.00(6.85)	
0						
2	33610	30490	"1 "	0	TRAN from VLLY SPS 60.00 BRKR to (3) VLLY SPS 230.00	105
1	30490	30485	"1 "	0	line from VLLY SPS 230.00 BRKR to BRKR TIGR CRK 230.00	
1	30490	30500	"1 "	0	line from VLLY SPS 230.00 BRKR to BRKR BELLOTA 230.00	
0						
2	33704	30495	"1 "	0	TRAN from STAGG 60.00 BRKR to BRKR STAGG 230.00	106
0						
2	33704	30495	"4 "	0	TRAN from STAGG 60.00 BRKR to BRKR STAGG 230.00	107
0						
2	33562	30500	"2 "	0	TRAN from BELLOTA 115.00 BRKR to BRKR BELLOTA 230.00	108
0						
2	30500	30501	"1 "	0	TRAN from BELLOTA 230.00 BRKR to (3) BLLTA 1M 230.00	109
2	30501	33562	"1 "	0	TRAN from BLLTA 1M 230.00 (3) to BRKR BELLOTA 115.00	
2	30501	33804	"1 "	0	TRAN from BLLTA 1M 230.00 (3) to (1) BELLTA T 13.80	
0						
2	38102	30503	"1 "	0	TRAN from COLLRVL1 13.80 (1) to BRKR COLLERVL 230.00	110
3	38102	0	"1 "	0	GEN-DROP COLLRVL1 13.80 GEN==88.00(58.80)	
0						
2	38104	30503	"1 "	0	TRAN from COLLRVL2 13.80 (1) to BRKR COLLERVL 230.00	111
3	38104	0	"1 "	0	GEN-DROP COLLRVL2 13.80 GEN==88.00(58.80)	
0						
2	33650	30505	"1 "	0	TRAN from WEBER 1 60.00 BRKR to BRKR WEBER 230.00	112
0						
2	33662	30505	"2 "	0	TRAN from WEBER 2 60.00 BRKR to BRKR WEBER 230.00	113
2	33662	30505	"2a "	0	Bank 2 or 2a are tied to same breaker (CB 242,202&82)	
0						
2	36964	30515	"1 "	0	TRAN from WRNRVLLE 115.00 BRKR to BRKR WARNERVL 230.00	114
0						
2	36964	30515	"2 "	0	TRAN from WRNRVLLE 115.00 BRKR to BRKR WARNERVL 230.00	115
0						
2	36964	30515	"3 "	0	TRAN from WRNRVLLE 115.00 BRKR to BRKR WARNERVL 230.00	116
0						
2	30040	30624	"2 "	0	TRAN from TESLA 500.00 BRKR to (1) TESLA E 230.00	117
0						
2	30040	30625	"4 "	0	TRAN from TESLA 500.00 BRKR to BRKR TESLA D 230.00	118
0						
2	33540	30625	"1 "	0	TRAN from TESLA 115.00 BRKR to BRKR TESLA D 230.00	119
0						
2	33540	30625	"3 "	0	TRAN from TESLA 115.00 BRKR to BRKR TESLA D 230.00	120
0						
2	30040	30640	"6 "	0	TRAN from TESLA 500.00 BRKR to BRKR TESLA F 230.00	121
0						
2	34062	33506	"1 "	0	TRAN from STANISLS 13.80 (1) to BRKR STANISLS 115.00	122
3	34062	0	"1 "	0	GEN-DROP STANISLS 13.80 GEN==62.65(33.01)	
0						
2	33742	33514	"3 "	0	TRAN from MANTECA 60.00 BRKR to BRKR MANTECA 115.00	123
0						
2	33756	33528	"1 "	0	TRAN from KASSON 60.00 (4) to BRKR KASSON 115.00	124
1	33756	33750	"1 "	0	line from KASSON 60.00 BRKR to (1) CALVO 60.00	
1	33756	33758	"1 "	0	line from KASSON 60.00 BRKR to BRKR BANTA 60.00	
1	33756	33760	"1 "	0	line from KASSON 60.00 BRKR to (1) BNTA JCT 60.00	
4	33758	0	"1 "	0	LOAD-DROP BANTA 60.00 LOAD==8.26(0.74)	
0						
2	33850	33566	"1 "	0	TRAN from CAMANCHE 4.16 (1) to BRKR CAMANCHE 115.00	125
3	33850	0	"1 "	0	GEN-DROP CAMANCHE 4.16 GEN==3.50(-0.62)	
3	33850	0	"2 "	0	GEN-DROP CAMANCHE 4.16 GEN==3.50(0.00)	
3	33850	0	"3 "	0	GEN-DROP CAMANCHE 4.16 GEN==3.50(0.00)	

	From Bus	To Bus	Ckt		Description	
0						
2	33800	33582	"1 "	0	TRAN from SALT SPS 21.00 (2) to (2) SLT SPRG 115.00	126
1	33800	38100	"1 "	0	line from SALT SPS 21.00 BRKR to (1) SPICER 21.00	
1	33582	33584	"1 "	0	line from SLT SPRG 115.00 BRKR to BRKR TIGR CRK 115.00	
4	33800	0	"1 "	0	LOAD-DROP SALT SPS 21.00 LOAD==4.07(0.72)	
3	33800	0	"1 "	0	GEN-DROP SALT SPS 21.00 GEN==10.18(6.00)	
3	33800	0	"2 "	0	GEN-DROP SALT SPS 21.00 GEN==32.00(12.00)	
0						
2	33564	33725	"1 "	0	TRAN from LOCKFORD 115.00 BRKR to BRKR LOCKFRD1 60.00	127
0						
2	30495	33801	"5 "	0	TRAN from STAGG 230.00 BRKR to (1) STAGG_5 21.00	128
4	33801	0	"5 "	0	LOAD-DROP STAGG_5 21.00 LOAD==44.65(11.19)	
0						
2	30495	33803	"6 "	0	TRAN from STAGG 230.00 BRKR to (1) STAGG_6 21.00	129
4	33803	0	"6 "	0	LOAD-DROP STAGG_6 21.00 LOAD==45.07(0.00)	
0						
2	30487	33812	"1 "	0	TRAN from ELECTRA 230.00 (3) to (1) ELECTRA 13.80	130
1	30487	30485	"1 "	0	line from ELECTRA 230.00 BRKR to BRKR TIGR CRK 230.00	
1	30487	30500	"1 "	0	line from ELECTRA 230.00 BRKR to BRKR BELLOTA 230.00	
4	33812	0	"1 "	0	LOAD-DROP ELECTRA 13.80 LOAD==14.80(2.59)	
3	33812	0	"1 "	0	GEN-DROP ELECTRA 13.80 GEN==29.00(11.76)	
3	33812	0	"2 "	0	GEN-DROP ELECTRA 13.80 GEN==29.00(11.76)	
3	33812	0	"3 "	0	GEN-DROP ELECTRA 13.80 GEN==29.00(11.76)	
0						
2	34002	33964	"1 "	0	TRAN from SALADO 60.00 BRKR to (3) SALADO 115.00	131
1	33964	33962	"1 "	0	line from SALADO 115.00 BRKR to (1) SALDO TP 115.00	
1	33964	33965	"1 "	0	line from SALADO 115.00 BRKR to (1) SALADO J 115.00	
4	33964	0	"1 "	0	LOAD-DROP SALADO 115.00 LOAD==12.59(1.49)	
0						
2	33906	34078	"1 "	0	TRAN from SPRNG GP 115.00 BRKR to (1) SPRNG GP 6.00	132
3	34078	0	"1 "	0	GEN-DROP SPRNG GP 6.00 GEN==5.04(2.03)	
4	33906	0	"**"	0	This outage will also drop distrition load Bk1	
0						
2	36984	36950	"1 "	0	TRAN from KIRKWD 3 13.80 (1) to BRKR INTAKE 230.00	133
3	36984	0	"1 "	0	GEN-DROP KIRKWD 3 13.80 GEN==37.00(7.44)	
0						
2	36950	36980	"1 "	0	TRAN from INTAKE 230.00 BRKR to (1) KIRKWD 1 13.80	134
3	36980	0	"1 "	0	GEN-DROP KIRKWD 1 13.80 GEN==37.00(10.47)	
0						
2	36950	36982	"1 "	0	TRAN from INTAKE 230.00 BRKR to (1) KIRKWD 2 13.80	135
3	36982	0	"1 "	0	GEN-DROP KIRKWD 2 13.80 GEN==37.00(10.47)	
0						
2	36950	36986	"1 "	0	TRAN from INTAKE 230.00 BRKR to (1) HOLM 1 13.80	136
3	36986	0	"1 "	0	GEN-DROP HOLM 1 13.80 GEN==70.00(19.65)	
0						
2	36950	36988	"1 "	0	TRAN from INTAKE 230.00 BRKR to (1) HOLM 2 13.80	137
3	36988	0	"1 "	0	GEN-DROP HOLM 2 13.80 GEN==70.00(19.65)	
0						
2	37563	37561	"1 "	0	TRAN from MELONES 230.00 BRKR to (1) MELONE1 13.80	138
3	37561	0	"1 "	0	GEN-DROP MELONE1 13.80 GEN==127.05(60.00)	
0						
2	37563	37562	"1 "	0	TRAN from MELONES 230.00 BRKR to (1) MELONE2 13.80	139
0						
2	38480	38400	"1 "	0	TRAN from WALNUT 69.00 BRKR to BRKR WALNT 230.00	140
0						
2	38480	38400	"2 "	0	TRAN from WALNUT 69.00 BRKR to BRKR WALNT 230.00	141
0						
3	33687	0	"1"	0	STKTN WW 60.00 PGEN=1.50 QGEN=0.15	142
0						

	From Bus	To Bus	Ckt	Description			
3	33773	0	"1"	0 ALTA-CGE 60.00	PGEN=4.20 QGEN=-1.00		143
0							
3	33800	0	"1"	0 SALT SPS 21.00	PGEN=10.18 QGEN=6.00		144
0							
3	33800	0	"2"	0 SALT SPS 21.00	PGEN=32.00 QGEN=12.00		145
0							
3	33804	0	"1"	0 BELLTA T 13.80	PGEN=0.00 QGEN=40.00		146
0							
3	33806	0	"1"	0 TH.E.DV. 13.80	PGEN=19.55 QGEN=6.00		147
0							
3	33808	0	"1"	0 SJ COGEN 13.80	PGEN=45.40 QGEN=27.50		148
0							
3	33810	0	"1"	0 SP CMPNY 13.80	PGEN=37.58 QGEN=21.67		149
0							
3	33812	0	"1"	0 ELECTRA 13.80	PGEN=29.00 QGEN=11.76		150
0							
3	33812	0	"2"	0 ELECTRA 13.80	PGEN=29.00 QGEN=11.76		151
0							
3	33812	0	"3"	0 ELECTRA 13.80	PGEN=29.00 QGEN=11.76		152
0							
3	33814	0	"1"	0 CPC STCN 12.47	PGEN=48.88 QGEN=22.44		153
0							
3	33815	0	"1"	0 STKTN SR 13.80	PGEN=22.00 QGEN=-2.66		154
0							
3	33816	0	"1"	0 I.ENERGY 12.00	PGEN=14.50 QGEN=5.55		155
0							
3	33818	0	"1"	0 COG.NTNL 12.00	PGEN=34.97 QGEN=20.71		156
0							
3	33820	0	"1"	0 WEST PNT 11.50	PGEN=15.00 QGEN=3.00		157
0							
3	33822	0	"1"	0 TIGR CRK 11.00	PGEN=27.00 QGEN=6.85		158
0							
3	33822	0	"2"	0 TIGR CRK 11.00	PGEN=27.00 QGEN=6.85		159
0							
3	33826	0	"1"	0 MARTELL 9.11	PGEN=11.00 QGEN=8.76		160
0							
3	33830	0	"1"	0 GEN.MILL 9.11	PGEN=2.50 QGEN=1.50		161
0							
3	33832	0	"1"	0 COG.CAPT 9.11	PGEN=4.30 QGEN=6.60		162
0							
3	33836	0	"3"	0 USWP_4 9.11	PGEN=2.91 QGEN=0.00		163
0							
3	33838	0	"1"	0 USWP_3 9.11	PGEN=0.34 QGEN=0.00		164
0							
3	33840	0	"4"	0 FLOWD3-6 9.11	PGEN=1.13 QGEN=0.00		165
0							
3	33842	0	"4"	0 PATTERSN 9.11	PGEN=10.50 QGEN=0.00		166
0							
3	33846	0	"1"	0 PRDE 1-3 7.20	PGEN=8.00 QGEN=1.46		167
0							
3	33846	0	"2"	0 PRDE 1-3 7.20	PGEN=8.00 QGEN=1.46		168
0							
3	33848	0	"1"	0 PARDE 2 7.20	PGEN=8.00 QGEN=-1.50		169
0							
3	33850	0	"1"	0 CAMANCHE 4.16	PGEN=3.50 QGEN=-0.62		170
0							
3	33850	0	"2"	0 CAMANCHE 4.16	PGEN=3.50 QGEN=0.00		171
0							
3	33850	0	"3"	0 CAMANCHE 4.16	PGEN=3.50 QGEN=0.00		172

	From Bus	To Bus	Ckt	Description	
0					
3	33917	0	"1"	0 FBERBORD 115.00 PGEN=3.20 QGEN=-2.22	173
0					
3	34050	0	"1"	0 CH.STN. 13.80 PGEN=10.65 QGEN=11.00	174
0					
3	34054	0	"1"	0 MDSTO CN 13.80 PGEN=4.45 QGEN=6.00	175
0					
3	34056	0	"1"	0 STNSLSRP 13.80 PGEN=13.65 QGEN=14.00	176
0					
3	34058	0	"1"	0 DONNELLS 13.80 PGEN=63.48 QGEN=11.89	177
0					
3	34060	0	"1"	0 SANDBAR 13.80 PGEN=15.01 QGEN=1.27	178
0					
3	34062	0	"1"	0 STANISLS 13.80 PGEN=62.65 QGEN=33.01	179
0					
3	34074	0	"1"	0 BEARDSLY 6.90 PGEN=10.46 QGEN=0.78	180
0					
3	34076	0	"1"	0 TULLOCH 6.90 PGEN=8.00 QGEN=1.00	181
0					
3	34076	0	"2"	0 TULLOCH 6.90 PGEN=8.00 QGEN=1.00	182
0					
3	34078	0	"1"	0 SPRNG GP 6.00 PGEN=5.04 QGEN=2.03	183
0					
3	35310	0	"1"	0 LFC FIN+ 9.11 PGEN=0.18 QGEN=0.00	184
0					
3	36980	0	"1"	0 KIRKWD 1 13.80 PGEN=37.00 QGEN=10.47	185
0					
3	36982	0	"1"	0 KIRKWD 2 13.80 PGEN=37.00 QGEN=10.47	186
0					
3	36984	0	"1"	0 KIRKWD 3 13.80 PGEN=37.00 QGEN=7.44	187
0					
3	36986	0	"1"	0 HOLM 1 13.80 PGEN=70.00 QGEN=19.65	188
0					
3	36988	0	"1"	0 HOLM 2 13.80 PGEN=70.00 QGEN=19.65	189
0					
3	37561	0	"1"	0 MELONE1 13.80 PGEN=127.05 QGEN=60.00	190
0					
3	38102	0	"1"	0 COLLRVL1 13.80 PGEN=88.00 QGEN=58.80	191
0					
3	38104	0	"1"	0 COLLRVL2 13.80 PGEN=88.00 QGEN=58.80	192
0					
3	38122	0	"1"	0 NEWSPICE 4.16 PGEN=3.33 QGEN=-4.80	193
0					
3	38349	0	"1"	0 FRANKHMR 9.11 PGEN=3.47 QGEN=2.50	194
0					
3	38365	0	"1"	0 N.HGN DM 12.00 PGEN=2.20 QGEN=0.07	195
0					
3	38365	0	"2"	0 N.HGN DM 12.00 PGEN=1.10 QGEN=0.03	196
0					
3	37561	0	"1"	0 MELONE1 13.80 PGEN=127.05 QGEN=35.15	197
1	30500	38206	"1 "	0 line from BELLOTA 230.00 BRKR to (2) COTTLE A 230.00	
1	38206	37563	"1 "	0 line from COTTLE A 230.00 (2) to BRKR MELONES 230.00	
4	38206	0	"1 "	0 LOAD-DROP COTTLE A 230.00 LOAD==19.23(0.00)	
0					
3	37561	0	"1"	0 MELONE1 13.80 PGEN=127.05 QGEN=35.15	198
1	30500	38208	"1 "	0 line from BELLOTA 230.00 BRKR to (3) COTTLE B 230.00	
1	38208	30515	"1 "	0 line from COTTLE B 230.00 (3) to BRKR WARNERVL 230.00	
2	38208	38349	"1 "	0 TRAN from COTTLE B 230.00 (3) to (1) FRANKHMR 9.11	
4	38208	0	"2 "	0 LOAD-DROP COTTLE B 230.00 LOAD==21.32(7.38)	

	From Bus	To Bus	Ckt	Description	
3	38349	0	"1 "	0 GEN-DROP FRANKHMR 9.11 GEN==3.47(2.50)	
0					
3	34050	0	"1"	0 CH.STN. 13.80 PGEN=10.65 QGEN=11.00	199
1	33932	33922	"1 "	0 line from MELONES 115.00 BRKR to (1) R.TRACK 115.00	
4	33922	0	"1 "	0 LOAD-DROP R.TRACK 115.00 LOAD==12.33(2.44)	
0					
3	34054	0	"1"	0 MDSTO CN 13.80 PGEN=4.45 QGEN=6.00	200
1	33514	33970	"1 "	0 line from MANTECA 115.00 BRKR to (3) INGRM C. 115.00	
1	33970	33959	"1 "	0 line from INGRM C. 115.00 (3) to (2) TCHRT_T2 115.00	
1	33970	33965	"1 "	0 line from INGRM C. 115.00 (3) to (2) SALADO J 115.00	
1	33959	33540	"1 "	0 line from TCHRT_T2 115.00 (2) to BRKR TESLA 115.00	
1	33965	33964	"1 "	0 line from SALADO J 115.00 (2) to BRKR SALADO 115.00	
4	33970	0	"1 "	0 LOAD-DROP INGRM C. 115.00 LOAD==4.00(1.82)	
0					
3	34062	0	"1"	0 STANISLS 13.80 PGEN=62.65 QGEN=31.20	201
1	33540	33544	"1 "	0 line from TESLA 115.00 BRKR to (2) ELLS GTY 115.00	
1	33544	33546	"1 "	0 line from ELLS GTY 115.00 (2) to (2) TRACY JC 115.00	
1	33546	33542	"1 "	0 line from TRACY JC 115.00 (2) to (2) LEPRINO 115.00	
1	33542	33548	"1 "	0 line from LEPRINO 115.00 (2) to BRKR TRACY 115.00	
4	33544	0	"1 "	0 LOAD-DROP ELLS GTY 115.00 LOAD==3.60(1.85)	
4	33542	0	"1 "	0 LOAD-DROP LEPRINO 115.00 LOAD==4.72(3.05)	
0					
3	34062	0	"1"	0 STANISLS 13.80 PGEN=62.65 QGEN=31.20	202
1	33514	33526	"1 "	0 line from MANTECA 115.00 BRKR to (3) KSSN-JC1 115.00	
1	33526	33528	"1 "	0 line from KSSN-JC1 115.00 (3) to BRKR KASSON 115.00	
1	33526	33533	"1 "	0 line from KSSN-JC1 115.00 (3) to (2) OWENSTP2 115.00	
1	33533	33535	"1 "	0 line from OWENSTP2 115.00 (2) to (2) SFWY_TP2 115.00	
1	33535	33543	"1 "	0 line from SFWY_TP2 115.00 (2) to (3) AEC_TP2 115.00	
1	33543	33536	"1 "	0 line from AEC_TP2 115.00 (3) to (2) TESLA JB 115.00	
1	33543	33545	"1 "	0 line from AEC_TP2 115.00 (3) to (2) AEC_JCT 115.00	
1	33536	33540	"1 "	0 line from TESLA JB 115.00 (2) to BRKR TESLA 115.00	
1	33545	33547	"1 "	0 line from AEC_JCT 115.00 (2) to (1) AEC_300 115.00	
4	33547	0	"1 "	0 LOAD-DROP AEC_300 115.00 LOAD==3.00(9.54)	
0					
3	34062	0	"1"	0 STANISLS 13.80 PGEN=62.65 QGEN=31.20	203
1	33562	33950	"1 "	0 line from BELLOTA 115.00 BRKR to (3) RVRBK TP 115.00	
1	33950	33934	"1 "	0 line from RVRBK TP 115.00 (3) to (3) TULLOCH 115.00	
1	33950	33944	"1 "	0 line from RVRBK TP 115.00 (3) to BRKR RVRBANK 115.00	
1	33934	33932	"1 "	0 line from TULLOCH 115.00 (3) to BRKR MELONES 115.00	
2	33934	34076	"1 "	0 TRAN from TULLOCH 115.00 (3) to (1) TULLOCH 6.90	
3	34076	0	"1 "	0 GEN-DROP TULLOCH 6.90 GEN==8.00(1.00)	
3	34076	0	"2 "	0 GEN-DROP TULLOCH 6.90 GEN==8.00(1.00)	
0					
3	34062	0	"1"	0 STANISLS 13.80 PGEN=62.65 QGEN=31.20	204
1	33506	33948	"1 "	0 line from STANISLS 115.00 BRKR to (2) RVRBK J2 115.00	
1	33948	33953	"1 "	0 line from RVRBK J2 115.00 (2) to (2) VLYHMTP2 115.00	
1	33953	33511	"1 "	0 line from VLYHMTP2 115.00 (2) to (2) AVENATP2 115.00	
1	33511	33514	"1 "	0 line from AVENATP2 115.00 (2) to BRKR MANTECA 115.00	
0					
3	34062	0	"1"	0 STANISLS 13.80 PGEN=62.65 QGEN=31.20	205
1	33503	33936	"1 "	0 line from FRGTNTP2 115.00 (2) to (3) MELNS JB 115.00	
1	33503	33504	"1 "	0 line from FRGTNTP2 115.00 (2) to (2) CATARACT 115.00	
1	33936	33932	"1 "	0 line from MELNS JB 115.00 (3) to BRKR MELONES 115.00	
1	33936	33951	"1 "	0 line from MELNS JB 115.00 (3) to (3) VLYHMTP1 115.00	
1	33504	33506	"1 "	0 line from CATARACT 115.00 (2) to BRKR STANISLS 115.00	
1	33951	33516	"1 "	0 line from VLYHMTP1 115.00 (3) to (3) RPN JNCN 115.00	
1	33951	33952	"1 "	0 line from VLYHMTP1 115.00 (3) to (1) VALLY HM 115.00	
1	33516	33514	"1 "	0 line from RPN JNCN 115.00 (3) to BRKR MANTECA 115.00	
1	33516	33520	"1 "	0 line from RPN JNCN 115.00 (3) to (1) RIPON 115.00	

	From Bus	To Bus	Ckt	Description	
4	33952	0	"1 "	0 LOAD-DROP VALLY HM 115.00 LOAD==4.10(0.93)	
4	33520	0	"2 "	0 LOAD-DROP RIPON 115.00 LOAD==22.22(0.00)	
0					
3	34062	0	"1"	0 STANISLS 13.80 PGEN=62.65 QGEN=31.20	206
1	33500	33509	"1 "	0 line from MELNS JA 115.00 (3) to (3) AVENATP1 115.00	
1	33500	33501	"1 "	0 line from MELNS JA 115.00 (3) to (3) FRGTNTP1 115.00	
1	33500	33932	"1 "	0 line from MELNS JA 115.00 (3) to BRKR MELONES 115.00	
1	33509	33510	"1 "	0 line from AVENATP1 115.00 (3) to (1) AVENA 115.00	
1	33509	33514	"1 "	0 line from AVENATP1 115.00 (3) to BRKR MANTECA 115.00	
1	33501	33502	"1 "	0 line from FRGTNTP1 115.00 (3) to (1) FROGTOWN 115.00	
1	33501	33506	"1 "	0 line from FRGTNTP1 115.00 (3) to BRKR STANISLS 115.00	
4	33510	0	"1 "	0 LOAD-DROP AVENA 115.00 LOAD==11.24(0.00)	
4	33502	0	"1 "	0 LOAD-DROP FROGTOWN 115.00 LOAD==6.47(1.48)	
4	33502	0	"2 "	0 LOAD-DROP FROGTOWN 115.00 LOAD==11.22(2.55)	
1	33511	33510	"1 "	1 Switches in Avenan SW 145 to transfer load	
4	33510	0	"**"	1 Restores Load at Avena	
0					
3	34062	0	"1"	0 STANISLS 13.80 PGEN=62.65 QGEN=31.20	207
1	33540	33568	"1 "	0 line from TESLA 115.00 BRKR to (3) TH.E.DV. 115.00	
1	33568	33570	"1 "	0 line from TH.E.DV. 115.00 (3) to (3) SPC JCT. 115.00	
2	33568	33806	"1 "	0 TRAN from TH.E.DV. 115.00 (3) to (1) TH.E.DV. 13.80	
1	33570	33572	"1 "	0 line from SPC JCT. 115.00 (3) to (2) SP CMPNY 115.00	
1	33570	33956	"1 "	0 line from SPC JCT. 115.00 (3) to (2) SJ COGEN 115.00	
2	33572	33810	"1 "	0 TRAN from SP CMPNY 115.00 (2) to (1) SP CMPNY 13.80	
2	33956	33808	"1 "	0 TRAN from SJ COGEN 115.00 (2) to (1) SJ COGEN 13.80	
3	33806	0	"1 "	0 GEN-DROP TH.E.DV. 13.80 GEN==19.55(6.00)	
3	33810	0	"1 "	0 GEN-DROP SP CMPNY 13.80 GEN==37.58(19.92)	
3	33808	0	"1 "	0 GEN-DROP SJ COGEN 13.80 GEN==45.40(27.50)	
0					
3	33818	0	"1"	0 COG.NTNL 12.00 PGEN=34.97 QGEN=18.58	208
1	33658	33670	"1 "	0 line from SNTA FEB 60.00 (3) to BRKR STCKTN A 60.00	
1	33658	33678	"1 "	0 line from SNTA FEB 60.00 (3) to (2) MONARCH 60.00	
1	33658	33662	"1 "	0 line from SNTA FEB 60.00 (3) to BRKR WEBER 2 60.00	
1	33678	33684	"1 "	0 line from MONARCH 60.00 (2) to (2) HARDING 60.00	
1	33684	33686	"1 "	0 line from HARDING 60.00 (2) to (1) STCKTNAR 60.00	
4	33678	0	"2 "	0 LOAD-DROP MONARCH 60.00 LOAD==4.56(1.04)	
4	33684	0	"1 "	0 LOAD-DROP HARDING 60.00 LOAD==5.13(1.17)	
4	33684	0	"2 "	0 LOAD-DROP HARDING 60.00 LOAD==5.13(1.17)	
4	33686	0	"1 "	0 LOAD-DROP STCKTNAR 60.00 LOAD==2.21(0.51)	
0					
3	33816	0	"1"	0 I.ENERGY 12.00 PGEN=14.50 QGEN=7.09	209
1	33610	33619	"1 "	0 line from VLLY SPS 60.00 BRKR to (3) AMFOR_SW 60.00	
1	33619	33616	"1 "	0 line from AMFOR_SW 60.00 (3) to BRKR MARTELL 60.00	
1	33619	33620	"1 "	0 line from AMFOR_SW 60.00 (3) to (2) AM FORST 60.00	
2	33620	33826	"1 "	0 TRAN from AM FORST 60.00 (2) to (1) MARTELL 9.11	
4	33620	0	"1 "	0 LOAD-DROP AM FORST 60.00 LOAD==6.76(6.33)	
3	33826	0	"1 "	0 GEN-DROP MARTELL 9.11 GEN==11.00(7.77)	
0					
3	33826	0	"1"	0 MARTELL 9.11 PGEN=11.00 QGEN=7.77	210
1	33610	33634	"1 "	0 line from VLLY SPS 60.00 BRKR to (3) PRDE JCT 60.00	
1	33634	33626	"1 "	0 line from PRDE JCT 60.00 (3) to (3) I.NRGYJT 60.00	
2	33634	33846	"1 "	0 TRAN from PRDE JCT 60.00 (3) to (1) PRDE 1-3 7.20	
1	33626	33622	"1 "	0 line from I.NRGYJT 60.00 (3) to (2) CLAY 60.00	
1	33626	33628	"1 "	0 line from I.NRGYJT 60.00 (3) to (2) I.ENERGY 60.00	
1	33622	33623	"1 "	0 line from CLAY 60.00 (2) to (3) INE_TP 60.00	
1	33623	33616	"1 "	0 line from INE_TP 60.00 (3) to BRKR MARTELL 60.00	
1	33623	33624	"1 "	0 line from INE_TP 60.00 (3) to (1) INE PRSN 60.00	
2	33628	33816	"1 "	0 TRAN from I.ENERGY 60.00 (2) to (1) I.ENERGY 12.00	
4	33622	0	"1 "	0 LOAD-DROP CLAY 60.00 LOAD==8.27(0.00)	

	From Bus	To Bus	Ckt	Description	
4	33624	0	"1 "	0 LOAD-DROP INE PRSN 60.00 LOAD==11.01(2.51)	
3	33846	0	"1 "	0 GEN-DROP PRDE 1-3 7.20 GEN==8.00(1.22)	
3	33846	0	"2 "	0 GEN-DROP PRDE 1-3 7.20 GEN==8.00(1.22)	
3	33816	0	"1 "	0 GEN-DROP I.ENERGY 12.00 GEN==14.50(5.15)	
1	33616	33618	"1 "	0 Must include Martell - Oleda in this outage	
4	33618	0	"**"	0 LOAD-DROP OLETA 60.00	
0					
3	34056	0	"1"	0 STNSLSRP 13.80 PGEN=13.65 QGEN=14.00	211
1	34002	34004	"1 "	0 line from SALADO 60.00 BRKR to (2) PTRSNFRZ 60.00	
1	34004	34006	"1 "	0 line from PTRSNFRZ 60.00 (2) to BRKR PATTERSN 60.00	
4	34004	0	"1 "	0 LOAD-DROP PTRSNFRZ 60.00 LOAD==10.80(8.38)	
0					
3	34056	0	"1"	0 STNSLSRP 13.80 PGEN=13.65 QGEN=14.00	212
1	34006	34010	"1 "	0 line from PATTERSN 60.00 BRKR to (3) CRWS LDJ 60.00	
1	34010	34012	"1 "	0 line from CRWS LDJ 60.00 (3) to (2) GUSTN JT 60.00	
1	34010	34017	"1 "	0 line from CRWS LDJ 60.00 (3) to (1) CRWS LDG 60.00	
1	34012	34014	"1 "	0 line from GUSTN JT 60.00 (2) to BRKR NEWMAN 60.00	
4	34017	0	"1 "	0 LOAD-DROP CRWS LDG 60.00 LOAD==3.97(0.31)	
1	34016	34017	"1 "	1 Switches in Crows Landing SW 57 to transfer load	
4	34017	0	"**"	1 Restore Load at Crows Landing	
-1					

GWF Tracy Peaker Studies
500-kV Outage List

	From Bus	To Bus	Ckt		Description	
1	30005	30015	"1 "	0	line from ROUND MT 500.00 BRKR to BRKR TABLE MT 500.00	1
0						
1	30005	30015	"2 "	0	line from ROUND MT 500.00 BRKR to BRKR TABLE MT 500.00	2
0						
1	30015	30030	"1 "	0	line from TABLE MT 500.00 BRKR to BRKR VACA-DIX 500.00	3
0						
1	30015	30040	"1 "	0	line from TABLE MT 500.00 BRKR to BRKR TESLA 500.00	4
0						
1	30020	30025	"1 "	0	line from OLINDA 500.00 BRKR to (2) MAXWELL 500.00	5
1	30025	30035	"1 "	0	line from MAXWELL 500.00 (2) to BRKR TRACY 500.00	
0						
1	30030	30040	"1 "	0	line from VACA-DIX 500.00 BRKR to BRKR TESLA 500.00	6
0						
1	30035	30040	"1 "	0	line from TRACY 500.00 BRKR to BRKR TESLA 500.00	7
0						
1	30035	30050	"1 "	0	line from TRACY 500.00 BRKR to BRKR LOSBANOS 500.00	8
0						
1	30040	30042	"1 "	0	line from TESLA 500.00 BRKR to BRKR METCALF 500.00	9
0						
1	30040	30050	"1 "	0	line from TESLA 500.00 BRKR to BRKR LOSBANOS 500.00	10
0						
1	30042	30045	"1 "	0	line from METCALF 500.00 BRKR to BRKR MOSSLAND 500.00	11
0						
1	30045	30050	"1 "	0	line from MOSSLAND 500.00 BRKR to BRKR LOSBANOS 500.00	12
0						
1	30050	30055	"1 "	0	line from LOSBANOS 500.00 BRKR to BRKR GATES 500.00	13
0						
1	30050	30060	"1 "	0	line from LOSBANOS 500.00 BRKR to BRKR MIDWAY 500.00	14
0						
1	30055	30057	"1 "	0	line from GATES 500.00 BRKR to BRKR DIABLO 500.00	15
0						
1	30055	30060	"1 "	0	line from GATES 500.00 BRKR to BRKR MIDWAY 500.00	16
0						
1	30057	30060	"1 "	0	line from DIABLO 500.00 BRKR to BRKR MIDWAY 500.00	17
0						
1	30057	30060	"2 "	0	line from DIABLO 500.00 BRKR to BRKR MIDWAY 500.00	18
0						
1	40687	30005	"2 "	0	line from MALIN 500.00 (7) to BRKR ROUND MT 500.00	19
0						
1	45035	30020	"1 "	0	line from CAPTJACK 500.00 (5) to BRKR OLINDA 500.00	20
0						
1	30060	24156	"1 "	0	line from MIDWAY 500.00 BRKR to (8) VINCENT 500.00	21
0						
1	24156	30060	"2 "	0	line from VINCENT 500.00 (8) to BRKR MIDWAY 500.00	22
0						
1	24156	30060	"3 "	0	line from VINCENT 500.00 (8) to BRKR MIDWAY 500.00	23
0						
2	30060	30970	"11"	0	TRAN from MIDWAY 500.00 BRKR to (1) MIDWAY 230.00	24
0						

	From Bus	To Bus	Ckt		Description	
2	30055	30900	"11"	0	TRAN from GATES 500.00 BRKR to (1) GATES 230.00	25
0						
2	30035	37585	"1 "	0	TRAN from TRACY 500.00 BRKR to (1) TRCY PMP 230.00	26
0						
2	30040	30625	"4 "	0	TRAN from TESLA 500.00 BRKR to BRKR TESLA D 230.00	27
0						
2	30040	30624	"2 "	0	TRAN from TESLA 500.00 BRKR to (1) TESLA E 230.00	28
0						
2	30735	30042	"12"	0	TRAN from METCALF 230.00 BRKR to BRKR METCALF 500.00	29
0						
2	30750	30045	"9 "	0	TRAN from MOSSLND2 230.00 BRKR to BRKR MOSSLAND 500.00	30
0						
2	30970	30060	"1 "	0	TRAN from MIDWAY 230.00 BRKR to BRKR MIDWAY 500.00	31
0						
2	36405	30045	"1 "	0	TRAN from MOSSLND6 22.00 (1) to BRKR MOSSLAND 500.00	32
4	36405	0	"1 "	0	LOAD-DROP MOSSLND6 22.00 LOAD==11.00(6.50)	
0						
2	36406	30045	"1 "	0	TRAN from MOSSLND7 22.00 (1) to BRKR MOSSLAND 500.00	33
4	36406	0	"1 "	0	LOAD-DROP MOSSLND7 22.00 LOAD==11.00(6.50)	
3	36406	0	"1 "	0	GEN-DROP MOSSLND7 22.00 GEN==600.00(221.86)	
0						
2	36411	30057	"1 "	0	TRAN from DIABLO 1 25.00 (1) to BRKR DIABLO 500.00	34
4	36411	0	"1 "	0	LOAD-DROP DIABLO 1 25.00 LOAD==50.00(25.00)	
3	36411	0	"1 "	0	GEN-DROP DIABLO 1 25.00 GEN==1000.00(82.99)	
0						
2	36412	30057	"1 "	0	TRAN from DIABLO 2 25.00 (1) to BRKR DIABLO 500.00	35
4	36412	0	"1 "	0	LOAD-DROP DIABLO 2 25.00 LOAD==50.00(25.00)	
3	36412	0	"1 "	0	GEN-DROP DIABLO 2 25.00 GEN==1000.00(83.00)	
0						
2	37565	30020	"1 "	0	TRAN from OLINDAW 230.00 BRKR to BRKR OLINDA 500.00	36
0						
2	30035	37585	"2 "	0	TRAN from TRACY 500.00 BRKR to (1) TRCY PMP 230.00	37
0						
2	30040	30640	"6 "	0	TRAN from TESLA 500.00 BRKR to BRKR TESLA F 230.00	38
0						
2	30005	30065	"1 "	0	TRAN from ROUND MT 500.00 BRKR to (3) RD MT 1M 500.00	39
2	30065	30245	"1 "	0	TRAN from RD MT 1M 500.00 (3) to BRKR ROUND MT 230.00	
2	30065	31796	"1 "	0	TRAN from RD MT 1M 500.00 (3) to (1) RD MT 1T 13.20	
0						
2	30015	30066	"1 "	0	TRAN from TABLE MT 500.00 BRKR to (3) TB MT 1M 500.00	40
2	30066	30303	"1 "	0	TRAN from TB MT 1M 500.00 (3) to BRKR TBL MT E 230.00	
2	30066	31762	"1 "	0	TRAN from TB MT 1M 500.00 (3) to (1) TB MT 1T 13.80	
1	30303	30300	"1 "	0	With Table Mt. 500 kV bank outage CDWR generation is off line	
0						
2	30050	30069	"1 "	0	TRAN from LOSBANOS 500.00 BRKR to (3) L.BANS M 500.00	41
2	30069	30765	"1 "	0	TRAN from L.BANS M 500.00 (3) to BRKR LOSBANOS 230.00	
2	30069	34302	"1 "	0	TRAN from L.BANS M 500.00 (3) to (1) L.BANS T 13.80	
0						
2	30735	30042	"11"	0	TRAN from METCALF 230.00 BRKR to BRKR METCALF 500.00	42
-1						

GWF Tracy Peaker Studies
Category C Contingency List (Double Circuit Tower Line Outages)

	From Bus	To Bus	Ckt	Description	
1	33610	33619	"1 "	0 line from VLLY SPS 60.00 BRKR to (3) AMFOR_SW 60.00	1
1	33619	33616	"1 "	0 line from AMFOR_SW 60.00 (3) to BRKR MARTELL 60.00	
1	33619	33620	"1 "	0 line from AMFOR_SW 60.00 (3) to (2) AM FORST 60.00	
2	33620	33826	"1 "	0 TRAN from AM FORST 60.00 (2) to (1) MARTELL 9.11	
4	33620	0	"1 "	0 LOAD-DROP AM FORST 60.00 LOAD==6.76(6.33)	
3	33826	0	"1 "	0 GEN-DROP MARTELL 9.11 GEN==11.00(8.76)	
0					
1	33610	33634	"1 "	0 line from VLLY SPS 60.00 BRKR to (3) PRDE JCT 60.00	2
1	33634	33626	"1 "	0 line from PRDE JCT 60.00 (3) to (3) I.NRGYJT 60.00	
2	33634	33846	"1 "	0 TRAN from PRDE JCT 60.00 (3) to (1) PRDE 1-3 7.20	
1	33626	33622	"1 "	0 line from I.NRGYJT 60.00 (3) to (2) CLAY 60.00	
1	33626	33628	"1 "	0 line from I.NRGYJT 60.00 (3) to (2) I.ENERGY 60.00	
1	33622	33623	"1 "	0 line from CLAY 60.00 (2) to (3) INE_TP 60.00	
1	33623	33616	"1 "	0 line from INE_TP 60.00 (3) to BRKR MARTELL 60.00	
1	33623	33624	"1 "	0 line from INE_TP 60.00 (3) to (1) INE PRSN 60.00	
2	33628	33816	"1 "	0 TRAN from I.ENERGY 60.00 (2) to (1) I.ENERGY 12.00	
4	33622	0	"1 "	0 LOAD-DROP CLAY 60.00 LOAD==8.27(0.00)	
4	33624	0	"1 "	0 LOAD-DROP INE PRSN 60.00 LOAD==11.01(2.51)	
3	33846	0	"1 "	0 GEN-DROP PRDE 1-3 7.20 GEN==8.00(1.46)	
3	33846	0	"2 "	0 GEN-DROP PRDE 1-3 7.20 GEN==8.00(1.46)	
3	33816	0	"1 "	0 GEN-DROP I.ENERGY 12.00 GEN==14.50(5.55)	
1	33616	33618	"1 "	0 Must include Martell - Oleda in this outage	
4	33618	0	"**"	0 LOAD-DROP OLETA 60.00	
0					
1	33562	33950	"1 "	0 line from BELLOTA 115.00 BRKR to (3) RVRBK TP 115.00	3
1	33950	33934	"1 "	0 line from RVRBK TP 115.00 (3) to (3) TULLOCH 115.00	
1	33950	33944	"1 "	0 line from RVRBK TP 115.00 (3) to BRKR RVRBANK 115.00	
1	33934	33932	"1 "	0 line from TULLOCH 115.00 (3) to BRKR MELONES 115.00	
2	33934	34076	"1 "	0 TRAN from TULLOCH 115.00 (3) to (1) TULLOCH 6.90	
3	34076	0	"1 "	0 GEN-DROP TULLOCH 6.90 GEN==8.00(1.00)	
3	34076	0	"2 "	0 GEN-DROP TULLOCH 6.90 GEN==8.00(1.00)	
1	33562	33946	"1 "	0 line from BELLOTA 115.00 BRKR to (2) RVRBK J1 115.00	
1	33946	33944	"1 "	0 line from RVRBK J1 115.00 (2) to BRKR RVRBANK 115.00	
0					
1	33506	33948	"1 "	0 line from STANISLS 115.00 BRKR to (2) RVRBK J2 115.00	4
1	33948	33953	"1 "	0 line from RVRBK J2 115.00 (2) to (2) VLYHMTP2 115.00	
1	33953	33511	"1 "	0 line from VLYHMTP2 115.00 (2) to (2) AVENATP2 115.00	
1	33511	33514	"1 "	0 line from AVENATP2 115.00 (2) to BRKR MANTECA 115.00	
1	33503	33936	"1 "	0 line from FRGTNTP2 115.00 (2) to (3) MELNS JB 115.00	
1	33503	33504	"1 "	0 line from FRGTNTP2 115.00 (2) to (2) CATARACT 115.00	
1	33936	33932	"1 "	0 line from MELNS JB 115.00 (3) to BRKR MELONES 115.00	
1	33936	33951	"1 "	0 line from MELNS JB 115.00 (3) to (3) VLYHMTP1 115.00	
1	33504	33506	"1 "	0 line from CATARACT 115.00 (2) to BRKR STANISLS 115.00	
1	33951	33516	"1 "	0 line from VLYHMTP1 115.00 (3) to (3) RPN JNCN 115.00	
1	33951	33952	"1 "	0 line from VLYHMTP1 115.00 (3) to (1) VALLY HM 115.00	
1	33516	33514	"1 "	0 line from RPN JNCN 115.00 (3) to BRKR MANTECA 115.00	
1	33516	33520	"1 "	0 line from RPN JNCN 115.00 (3) to (1) RIPON 115.00	
4	33952	0	"1 "	0 LOAD-DROP VALLY HM 115.00 LOAD==4.10(0.93)	
4	33520	0	"2 "	0 LOAD-DROP RIPON 115.00 LOAD==22.22(0.00)	
0					

	From Bus	To Bus	Ckt	Description	
1	33500	33509	"1 "	0 line from MELNS JA 115.00 (3) to (3) AVENATP1 115.00	5
1	33500	33501	"1 "	0 line from MELNS JA 115.00 (3) to (3) FRGTNTP1 115.00	
1	33500	33932	"1 "	0 line from MELNS JA 115.00 (3) to BRKR MELONES 115.00	
1	33509	33510	"1 "	0 line from AVENATP1 115.00 (3) to (1) AVENA 115.00	
1	33509	33514	"1 "	0 line from AVENATP1 115.00 (3) to BRKR MANTECA 115.00	
1	33501	33502	"1 "	0 line from FRGTNTP1 115.00 (3) to (1) FROGTOWN 115.00	
1	33501	33506	"1 "	0 line from FRGTNTP1 115.00 (3) to BRKR STANISLS 115.00	
4	33510	0	"1 "	0 LOAD-DROP AVENA 115.00 LOAD==11.24(0.00)	
4	33502	0	"1 "	0 LOAD-DROP FROGTOWN 115.00 LOAD==6.47(1.48)	
4	33502	0	"2 "	0 LOAD-DROP FROGTOWN 115.00 LOAD==11.22(2.55)	
1	33511	33510	"1 "	1 Switches in Avenan SW 145 to transfer load	
4	33510	0	"**"	1 Restores Load at Avena	
1	33506	33948	"1 "	0 line from STANISLS 115.00 BRKR to (2) RVRBK J2 115.00	6
1	33948	33953	"1 "	0 line from RVRBK J2 115.00 (2) to (2) VLYHMTP2 115.00	
1	33953	33511	"1 "	0 line from VLYHMTP2 115.00 (2) to (2) AVENATP2 115.00	
1	33511	33514	"1 "	0 line from AVENATP2 115.00 (2) to BRKR MANTECA 115.00	
0					
1	33531	33528	"1 "	0 line from OWENSTP1 115.00 (3) to BRKR KASSON 115.00	7
1	33531	33532	"1 "	0 line from OWENSTP1 115.00 (3) to (1) OI GLASS 115.00	
1	33531	33537	"1 "	0 line from OWENSTP1 115.00 (3) to (3) SFWY_TP1 115.00	
1	33537	33534	"1 "	0 line from SFWY_TP1 115.00 (3) to (1) SAFEWAY 115.00	
1	33537	33541	"1 "	0 line from SFWY_TP1 115.00 (3) to (2) AEC_TP1 115.00	
1	33541	33538	"1 "	0 line from AEC_TP1 115.00 (2) to (2) TESLA JA 115.00	
1	33538	33540	"1 "	0 line from TESLA JA 115.00 (2) to BRKR TESLA 115.00	
4	33532	0	"1 "	0 LOAD-DROP OI GLASS 115.00 LOAD==11.40(7.07)	
4	33534	0	"1 "	0 LOAD-DROP SAFEWAY 115.00 LOAD==5.28(2.09)	
1	33514	33526	"1 "	0 line from MANTECA 115.00 BRKR to (3) KSSN-JC1 115.00	
1	33526	33528	"1 "	0 line from KSSN-JC1 115.00 (3) to BRKR KASSON 115.00	
1	33526	33533	"1 "	0 line from KSSN-JC1 115.00 (3) to (2) OWENSTP2 115.00	
1	33533	33535	"1 "	0 line from OWENSTP2 115.00 (2) to (2) SFWY_TP2 115.00	
1	33535	33543	"1 "	0 line from SFWY_TP2 115.00 (2) to (3) AEC_TP2 115.00	
1	33543	33536	"1 "	0 line from AEC_TP2 115.00 (3) to (2) TESLA JB 115.00	
1	33543	33545	"1 "	0 line from AEC_TP2 115.00 (3) to (2) AEC_JCT 115.00	
1	33536	33540	"1 "	0 line from TESLA JB 115.00 (2) to BRKR TESLA 115.00	
1	33545	33547	"1 "	0 line from AEC_JCT 115.00 (2) to (1) AEC_300 115.00	
4	33547	0	"1 "	0 LOAD-DROP AEC_300 115.00 LOAD==3.00(9.54)	
0					
1	33531	33528	"1 "	0 line from OWENSTP1 115.00 (3) to BRKR KASSON 115.00	8
1	33531	33532	"1 "	0 line from OWENSTP1 115.00 (3) to (1) OI GLASS 115.00	
1	33531	33537	"1 "	0 line from OWENSTP1 115.00 (3) to (3) SFWY_TP1 115.00	
1	33537	33534	"1 "	0 line from SFWY_TP1 115.00 (3) to (1) SAFEWAY 115.00	
1	33537	33541	"1 "	0 line from SFWY_TP1 115.00 (3) to (2) AEC_TP1 115.00	
1	33541	33538	"1 "	0 line from AEC_TP1 115.00 (2) to (2) TESLA JA 115.00	
1	33538	33540	"1 "	0 line from TESLA JA 115.00 (2) to BRKR TESLA 115.00	
4	33532	0	"1 "	0 LOAD-DROP OI GLASS 115.00 LOAD==11.40(7.07)	
4	33534	0	"1 "	0 LOAD-DROP SAFEWAY 115.00 LOAD==5.28(2.09)	
1	33514	33539	"1 "	0 line from MANTECA 115.00 BRKR to (2) CROSRDJ2 115.00	
1	33539	33518	"1 "	0 line from CROSRDJ2 115.00 (2) to BRKR VIERRA 115.00	
0					

	From Bus	To Bus	Ckt	Description	
1	33531	33528	"1 "	0 line from OWENSTP1 115.00 (3) to BRKR KASSON 115.00	9
1	33531	33532	"1 "	0 line from OWENSTP1 115.00 (3) to (1) OI GLASS 115.00	
1	33531	33537	"1 "	0 line from OWENSTP1 115.00 (3) to (3) SFWY_TP1 115.00	
1	33537	33534	"1 "	0 line from SFWY_TP1 115.00 (3) to (1) SAFEWAY 115.00	
1	33537	33541	"1 "	0 line from SFWY_TP1 115.00 (3) to (2) AEC_TP1 115.00	
1	33541	33538	"1 "	0 line from AEC_TP1 115.00 (2) to (2) TESLA JA 115.00	
1	33538	33540	"1 "	0 line from TESLA JA 115.00 (2) to BRKR TESLA 115.00	
4	33532	0	"1 "	0 LOAD-DROP OI GLASS 115.00 LOAD==11.40(7.07)	
4	33534	0	"1 "	0 LOAD-DROP SAFEWAY 115.00 LOAD==5.28(2.09)	
1	33514	33970	"1 "	0 line from MANTECA 115.00 BRKR to (3) INGRM C. 115.00	
1	33970	33959	"1 "	0 line from INGRM C. 115.00 (3) to (2) TCHRT_T2 115.00	
1	33970	33965	"1 "	0 line from INGRM C. 115.00 (3) to (2) SALADO J 115.00	
1	33959	33540	"1 "	0 line from TCHRT_T2 115.00 (2) to BRKR TESLA 115.00	
1	33965	33964	"1 "	0 line from SALADO J 115.00 (2) to BRKR SALADO 115.00	
4	33970	0	"1 "	0 LOAD-DROP INGRM C. 115.00 LOAD==4.00(1.82)	
0					
1	33540	33961	"1 "	0 line from TESLA 115.00 BRKR to (3) TCHRT_T1 115.00	10
1	33961	33960	"1 "	0 line from TCHRT_T1 115.00 (3) to (3) MDSTO CN 115.00	
1	33961	33963	"1 "	0 line from TCHRT_T1 115.00 (3) to (2) TCHRTJCT 115.00	
1	33960	33962	"1 "	0 line from MDSTO CN 115.00 (3) to (3) SALDO TP 115.00	
2	33960	34054	"1 "	0 TRAN from MDSTO CN 115.00 (3) to (1) MDSTO CN 13.80	
1	33962	33964	"1 "	0 line from SALDO TP 115.00 (3) to BRKR SALADO 115.00	
1	33962	33967	"1 "	0 line from SALDO TP 115.00 (3) to (2) MILER TP 115.00	
1	33967	33966	"1 "	0 line from MILER TP 115.00 (2) to (1) MILLER 115.00	
1	33963	33968	"1 "	0 line from TCHRTJCT 115.00 (2) to (1) TEICHERT 115.00	
4	33966	0	"1 "	0 LOAD-DROP MILLER 115.00 LOAD==3.64(1.76)	
4	33968	0	"1 "	0 LOAD-DROP TEICHERT 115.00 LOAD==4.74(4.57)	
3	34054	0	"1 "	0 GEN-DROP MDSTO CN 13.80 GEN==4.45(6.00)	
1	33514	33970	"1 "	0 line from MANTECA 115.00 BRKR to (3) INGRM C. 115.00	
1	33970	33959	"1 "	0 line from INGRM C. 115.00 (3) to (2) TCHRT_T2 115.00	
1	33970	33965	"1 "	0 line from INGRM C. 115.00 (3) to (2) SALADO J 115.00	
1	33959	33540	"1 "	0 line from TCHRT_T2 115.00 (2) to BRKR TESLA 115.00	
1	33965	33964	"1 "	0 line from SALADO J 115.00 (2) to BRKR SALADO 115.00	
4	33970	0	"1 "	0 LOAD-DROP INGRM C. 115.00 LOAD==4.00(1.82)	
0					
1	33552	33553	"1 "	0 line from STCKTNJB 115.00 (2) to BRKR STKTON B 115.00	11
1	33552	33558	"1 "	0 line from STCKTNJB 115.00 (2) to (3) LCKFRDJB 115.00	
1	33558	33562	"1 "	0 line from LCKFRDJB 115.00 (3) to BRKR BELLOTA 115.00	
1	33558	33564	"1 "	0 line from LCKFRDJB 115.00 (3) to BRKR LOCKFORD 115.00	
4	33553	0	"3 "	0 LOAD-DROP STKTON B 115.00 LOAD==26.71(0.00)	
1	33554	33555	"1 "	0 line from STCKTNJA 115.00 (2) to BRKR STKTON A 115.00	
1	33554	33556	"1 "	0 line from STCKTNJA 115.00 (2) to (3) STN COGN 115.00	
1	33556	33560	"1 "	0 line from STN COGN 115.00 (3) to (2) LCKFRDJA 115.00	
1	33556	33958	"1 "	0 line from STN COGN 115.00 (3) to (2) CPC STCN 115.00	
1	33560	33562	"1 "	0 line from LCKFRDJA 115.00 (2) to BRKR BELLOTA 115.00	
2	33958	33814	"1 "	0 TRAN from CPC STCN 115.00 (2) to (1) CPC STCN 12.47	
4	33555	0	"4 "	0 LOAD-DROP STKTON A 115.00 LOAD==17.13(0.76)	
4	33555	0	"5 "	0 LOAD-DROP STKTON A 115.00 LOAD==17.47(3.17)	
4	33814	0	"1 "	0 LOAD-DROP CPC STCN 12.47 LOAD==4.90(1.10)	
3	33814	0	"1 "	0 GEN-DROP CPC STCN 12.47 GEN==48.88(19.40)	
0					

	From Bus	To Bus	Ckt	Description	
1	30515	30795	"1 "	0 line from WARNERVL 230.00 BRKR to (2) STOREY 2 230.00	12
1	30795	30805	"1 "	0 line from STOREY 2 230.00 (2) to BRKR BORDEN 230.00	
4	30795	0	"2 "	0 LOAD-DROP STOREY 2 230.00 LOAD==33.65(0.00)	
3	34604	0	"**"	0 Drop Helms unit3 with a loss Warnerville-Borden line	
1	30796	30800	"1 "	0 line from STOREY 1 230.00 (2) to BRKR WILSON 230.00	
1	30796	30810	"1 "	0 line from STOREY 1 230.00 (2) to BRKR GREGG 230.00	
4	30796	0	"1 "	0 LOAD-DROP STOREY 1 230.00 LOAD==25.16(0.00)	
0					
1	30500	38206	"1 "	0 line from BELLOTA 230.00 BRKR to (2) COTTLE A 230.00	13
1	38206	37563	"1 "	0 line from COTTLE A 230.00 (2) to BRKR MELONES 230.00	
4	38206	0	"1 "	0 LOAD-DROP COTTLE A 230.00 LOAD==19.23(0.00)	
3	34604	0	"**"	0 Drop Helms unit3 with a loss Borden-Melones line	
1	30515	30795	"1 "	0 line from WARNERVL 230.00 BRKR to (2) STOREY 2 230.00	
1	30795	30805	"1 "	0 line from STOREY 2 230.00 (2) to BRKR BORDEN 230.00	
4	30795	0	"2 "	0 LOAD-DROP STOREY 2 230.00 LOAD==33.65(0.00)	
0					
1	30500	38206	"1 "	0 line from BELLOTA 230.00 BRKR to (2) COTTLE A 230.00	14
1	38206	37563	"1 "	0 line from COTTLE A 230.00 (2) to BRKR MELONES 230.00	
4	38206	0	"1 "	0 LOAD-DROP COTTLE A 230.00 LOAD==19.23(0.00)	
3	34604	0	"**"	0 Drop Helms unit3 with a loss Borden-Melones line	
1	30500	38208	"1 "	0 line from BELLOTA 230.00 BRKR to (3) COTTLE B 230.00	
1	38208	30515	"1 "	0 line from COTTLE B 230.00 (3) to BRKR WARNERVL 230.00	
2	38208	38349	"1 "	0 TRAN from COTTLE B 230.00 (3) to (1) FRANKHMR 9.11	
4	38208	0	"2 "	0 LOAD-DROP COTTLE B 230.00 LOAD==21.32(7.38)	
3	38349	0	"1 "	0 GEN-DROP FRANKHMR 9.11 GEN==3.47(2.50)	
0					
1	37563	30800	"1 "	0 line from MELONES 230.00 BRKR to BRKR WILSON 230.00	15
3	34604	0	"**"	0 Drop Helms unit3 with a loss Melones-Wilson line	
1	30796	30800	"1 "	0 line from STOREY 1 230.00 (2) to BRKR WILSON 230.00	
1	30796	30810	"1 "	0 line from STOREY 1 230.00 (2) to BRKR GREGG 230.00	
4	30796	0	"1 "	0 LOAD-DROP STOREY 1 230.00 LOAD==25.16(0.00)	
0					
1	30495	30624	"1 "	0 line from STAGG 230.00 BRKR to BRKR TESLA E 230.00	16
1	30622	30624	"1 "	0 line from EIGHT MI 230.00 BRKR to BRKR TESLA E 230.00	
0					
1	30622	30495	"1 "	0 line from EIGHT MI 230.00 BRKR to BRKR STAGG 230.00	17
1	30622	30624	"1 "	0 line from EIGHT MI 230.00 BRKR to BRKR TESLA E 230.00	
0					
1	30337	30622	"1 "	0 line from GOLDHILL 230.00 BRKR to BRKR EIGHT MI 230.00	18
1	38000	30622	"1 "	0 line from LODI 230.00 BRKR to BRKR EIGHT MI 230.00	
0					
1	30337	30622	"1 "	0 line from GOLDHILL 230.00 BRKR to BRKR EIGHT MI 230.00	19
1	30337	38000	"1 "	0 line from GOLDHILL 230.00 BRKR to BRKR LODI 230.00	
0					
1	30500	30624	"1 "	0 line from BELLOTA 230.00 BRKR to BRKR TESLA E 230.00	20
1	30505	30624	"1 "	0 line from WEBER 230.00 BRKR to BRKR TESLA E 230.00	
0					
1	30500	30624	"1 "	0 line from BELLOTA 230.00 BRKR to BRKR TESLA E 230.00	21
1	30500	30505	"1 "	0 line from BELLOTA 230.00 BRKR to BRKR WEBER 230.00	
0					
1	30624	30630	"1 "	0 line from TESLA E 230.00 BRKR to BRKR NEWARK D 230.00	22
1	30640	30703	"1 "	0 line from TESLA F 230.00 BRKR to BRKR RAVENSWD 230.00	
0					

	From Bus	To Bus	Ckt		Description	
1	30580	30625	"1 "	0	line from ALTM MDW 230.00 (3) to BRKR TESLA D 230.00	23
1	30580	38610	"1 "	0	line from ALTM MDW 230.00 (3) to BRKR DELTAPMP 230.00	
2	30580	33175	"1 "	0	TRAN from ALTM MDW 230.00 (3) to (1) ALTAMONT 9.11	
3	33175	0	"2 "	0	GEN-DROP ALTAMONT 9.11 GEN==0.19(0.00)	
1	30569	30570	"1 "	0	line from KELSO 230.00 BRKR to (4) USWP-RLF 230.00	
1	30570	30571	"1 "	0	line from USWP-RLF 230.00 (4) to (2) ALTALAND 230.00	
1	30570	30625	"1 "	0	line from USWP-RLF 230.00 (4) to BRKR TESLA D 230.00	
2	30570	33836	"1 "	0	TRAN from USWP-RLF 230.00 (4) to (1) USWP_4 9.11	
2	30571	33832	"1 "	0	TRAN from ALTALAND 230.00 (2) to (1) COG.CAPT 9.11	
4	33836	0	"1 "	0	LOAD-DROP USWP_4 9.11 LOAD==0.40(0.19)	
3	33836	0	"3 "	0	GEN-DROP USWP_4 9.11 GEN==2.91(0.00)	
3	33832	0	"1 "	0	GEN-DROP COG.CAPT 9.11 GEN==4.30(6.60	
0						
1	37585	30625	"1 "	0	line from TRCY PMP 230.00 BRKR to BRKR TESLA D 230.00	24
1	37585	30625	"2 "	0	line from TRCY PMP 230.00 BRKR to BRKR TESLA D 230.00	
0						
1	37016	30500	"1 "	0	line from RNCHSECO 230.00 BRKR to BRKR BELLOTA 230.00	25
1	37016	30500	"2 "	0	line from RNCHSECO 230.00 BRKR to BRKR BELLOTA 230.00	
0						
1	30482	30500	"1 "	0	line from LOCKFORD 230.00 BRKR to BRKR BELLOTA 230.00	26
1	30348	30500	"1 "	0	line from BRIGHTON 230.00 BRKR to BRKR BELLOTA 230.00	
0						
1	30348	30500	"1 "	0	line from BRIGHTON 230.00 BRKR to BRKR BELLOTA 230.00	27
1	30330	30482	"1 "	0	line from RIO OSO 230.00 BRKR to BRKR LOCKFORD 230.00	
-1						

APPENDIX B

RESULTS OF POWERFLOW STUDIES

TABLE B-1
COMPARISON OF POWERFLOW RESULTS - CATEGORY B OUTAGES

Contingency	Impacted Line or Transformer						Pre-Project		Post-Project	
	From Bus		To Bus		Ckt	Rating	Loading (%)		Loading (%)	
	Name	kV	Name	kV		(MVA)	N-0	N-1	N-0	N-1
TESLA F-ADCC 230-kV & ADCC-NEWARK D 230-kV Lines	FGP_TAP	230	RAVENSWD	230	1	841	59	102	54	102
	NEWARK D	230	FGP_TAP	230	1	840	59	102	54	102
STCKTNJB-STKTON B 115-kV & STCKTNJB-LCKFRDJB 115-kV Line							Diverged		Diverged	
STCKTNJA-STKTON A 115-kV & STCKTNJA-STN COGN 115-kV Line									Diverged	
SLT SPRG-TIGR CRK 115-kV Line	TOSCO-PP	60	SOUTH BY	60	1	77	26	147	26	147
	B.BTHNY-	60	ALTA-CGE	60	1	77	22	455	22	455
STAGG-CNTRY CB #2 60-kV Line	CNTRY CB	60	UOP	60	1	92	41	116	41	117
CNTRY CB-UOP 60-kV & UOP-WSTLNESW 60-kV Lines	LOCKEFRD	60	INDUSTRL	60	1	92	64	102	67	101
PRKR MID - WESTLEY 230-kV Line	PRKR MID	230	PARKER1M	230	1	233	77	135	77	134
	PARKER	69	PARKER1M	230	1	268	66	114	66	113
PRKR MID - PARKER2M 230-kV #1 Line	PRKR MID	230	PARKER2M	230	1	233	78	135	77	134
	PARKER	69	PARKER2M	230	1	268	67	114	66	113
TIGR CRK-TIGR CKM 230-kV & TIGR CRK-ELECTRA 230-kV Lines	AMFOR_SW	60	MARTELL	60	1	36	57	1791	57	1791
	INE_TP	60	CLAY	60	1	36	38	119	39	119
	AMFOR_SW	60	AM FORST	60	1	36	13	158	13	158
VLLY SPS 230/60-kV Transformer & TIGR CRK-VLLY SPS 230-kV Line	STAGG	60	STAGG	230	1	161	59	118	59	118
STAGG 230/60-kV #1 Transformer	STAGG	60	STAGG	230	4	161	55	119	55	119
WEBER 230/60-kV #2 & #2a Transformers	WRNRVLLE	115	WARNERVL	230	2	75	91	165	92	167
	WRNRVLLE	115	WARNERVL	230	3	75	91	165	92	167
WRNRVLLE #1 115/230-kV Transformer	WRNRVLLE	115	WARNERVL	230	1	150	91	117	92	118
WRNRVLLE #3 115/230-kV Transformer	MRYSVLLE	60	PEASE	60	1	53	99	100	98	100
STANISLS Generator & STANISLS 115/13.8-kV Transformer	CALVO	60	KASSON	60	1	34	22	112	22	112
	MSSDLESW	60	CALVO	60	1	34	18	107	17	107
MANTECA 115/60-kV #3 Transformer	MANTECA	60	MANTECA	115	3	38	86	102	86	102
MDSTO CN Generator & MANTECA-INGRM C. 115-kV Line	KASSON	115	KSSN-JC2	115	1	148	23	103	23	103
STANISLS Generator & TESLA-ELLS GTY 115-kV Line	ELLS GTY	115	TRACY JC	115	1	150	75	105	76	107
COG. NTNL Generator & SNTA FEB-STOCKTON A 60-kV Line	VLLY SPS	60	PRDE JCT	60	1	25	13	151	13	151
MARTELL Generator & VLLY SPS-PRDE JCT 60-kV Line	STNSLSRP	60	MEDLIN J	60	1	41	48	110	48	111
	MEDLIN J	60	NWMN JCT	60	1	41	48	110	48	111
	SALADO	60	STNSLSRP	60	1	41	28	110	28	110

TABLE B-2
COMPARISON OF POWERFLOW RESULTS - CATEGORY B OUTAGES

Contingency	Impacted Line or Transformer						Pre-Project Loading (%)		Post-Project Loading (%)	
	From Bus		To Bus		Ckt	Rating				
	Name	kV	Name	kV		(MVA)	N-0	N-1	N-0	N-1
OWENSTP1-KASSON 115-kV Line	ELLS GTY	115	TRACY JC	115	1	150	76	138	76	138
	LEPRINO	115	TRACY JC	115	1	194	59	107	58	106
	LEPRINO	115	TRACY	115	1	194	56	104	56	104
WARNERVL-STOREY 2 230-kV & STOREY 2-BORDEN 230-kV Lines	PANOCHEJ	115	PANOCHE	115	1	102	81	101		
	PANOCHE	230	PNCHE 2M	230	2	146	84	100	84	99
MELONES-WILSON 230-kV Line & HELMS 3 Generator							Diverged		Diverged	
STAGG-TESLA E 230-kV Line	MRYSVLLE	60	PEASE	60	1	53	99	101	98	101
TESLA E-NEWARK D 230-kV & TESLA F-RAVENSWD 230-kV Lines	ADCC	230	NEWARK D	230	1	683	63	102	71	115
	C.COSTA	230	LS PSTAS	230	1	408	80	102	85	110
	TESLA F	230	ADCC	230	1	683	63	102	71	115
RNCHSECO-BELLOTA 230-Kv #1 & #2 Lines							Diverged		Diverged	

TABLE B-3
COMPARISON OF POWERFLOW RESULTS - 500-KV OUTAGES

Contingency	Impacted Line or Transformer						Pre-Project Loading (%)		Post-Project Loading (%)	
	From Bus		To Bus		Ckt	Rating				
	Name	kV	Name	kV		(MVA)	N-0	N-1	N-0	N-1
ROUND MT-TABLE MT 500-kV #2 Line	ROUND MT	500	TABLE MT	500	2	2466	65	118	65	118
TABLE MT-VACA-DIX 500-kV Line	ROUND MT	500	TABLE MT	500	1	2466	64	118	64	118
	TBL MT D	230	RIO OSO	230	1	389	78	102		
TABLE MT-TESLA 500-kV Line	MRYSVLLE	60	PEASE	60	1	53	99	104	98	103
OLINDA-MAXWELL 500-kV & MAXWELL-TRACY 500-kV Lines	COTWDWAP	230	ROSEVILL	230	1	319	77	102	76	101
METCALF-MOSSLAND 500-kV Line	METCALF	230	MOSSLND2	230	1	363	73	104	76	107
	METCALF	230	MOSSLND1	230	1	363	73	104	76	107
CAPTJACK-OLINDA 500-kV Line	MALIN	500	ROUND MT	500	1	2615	57	102	57	101
MIDWAY-VINCENT 500-Kv Line	MALIN	500	ROUND MT	500	2	2338	65	101	65	101
MIDWAY 500/230-kV Transformer	MIDWAY	230	MIDWAY	500	1	1120	84	132	82	129
DIABLO 1 500/25-kV Transformer & DIABLO 1 Generator	TEMPLETN	230	MORROBAY	230	1	388	50	118	44	111
LOSBANOS 500/230-Kv Transformer	TBL MT E	230	THM JCT	230	1	773	39	139	39	139

APPENDIX C

POWERFLOW DIAGRAMS

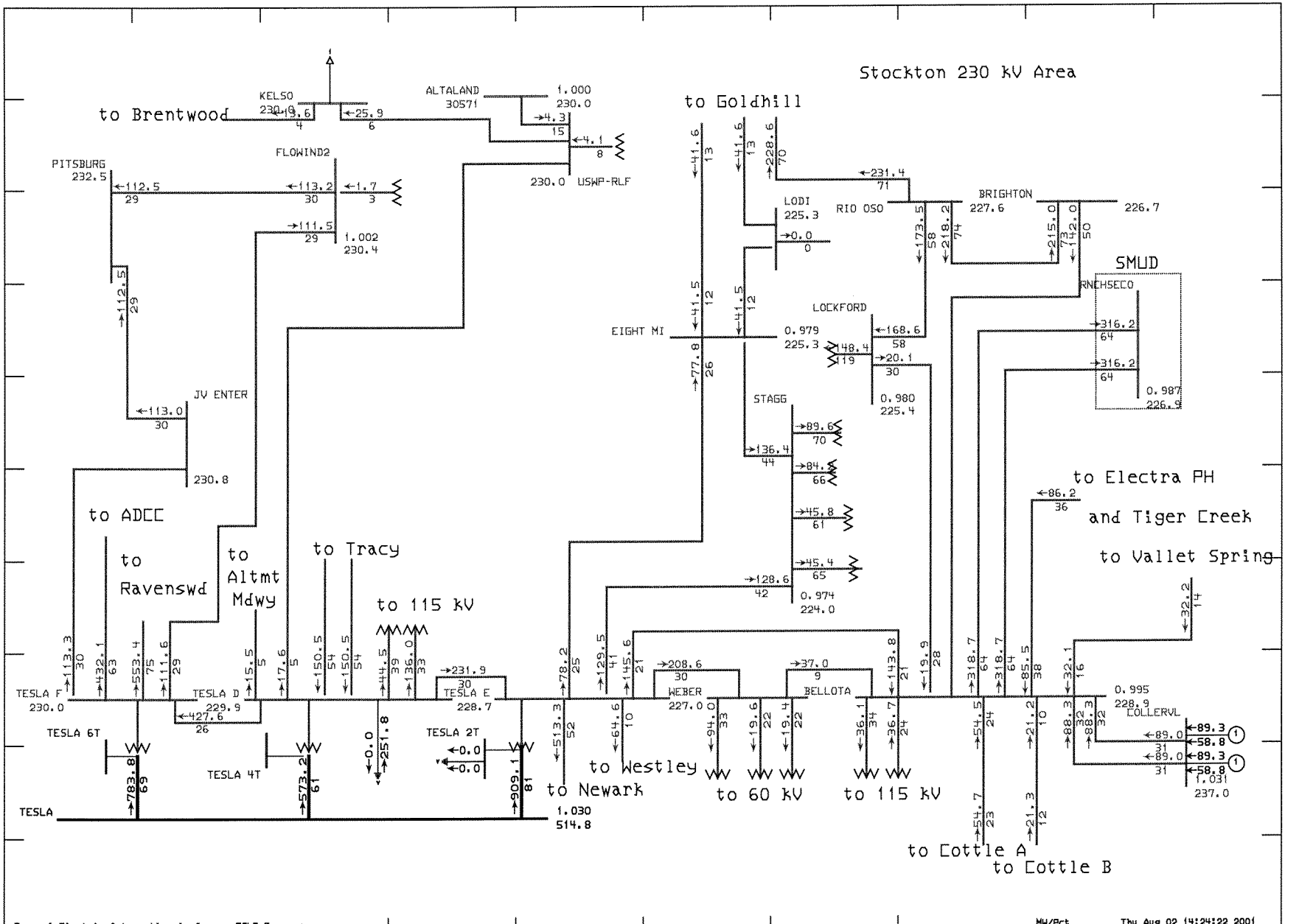

General Electric International, Inc. PSLF Program MW/Pct Thu Aug 02 14:24:22 2001

GENERAL ELECTRIC COMPANY	GWF 258 MW Tracy Power Plant Project 2003 Summer Peak Base Case, Steady State Study Existing System, Before GWF Tracy Facilities	Normal Operation Conditions BEFORE CASE	stockton_230_a.drw 03_a5_before_gwf.sav Rating = 1

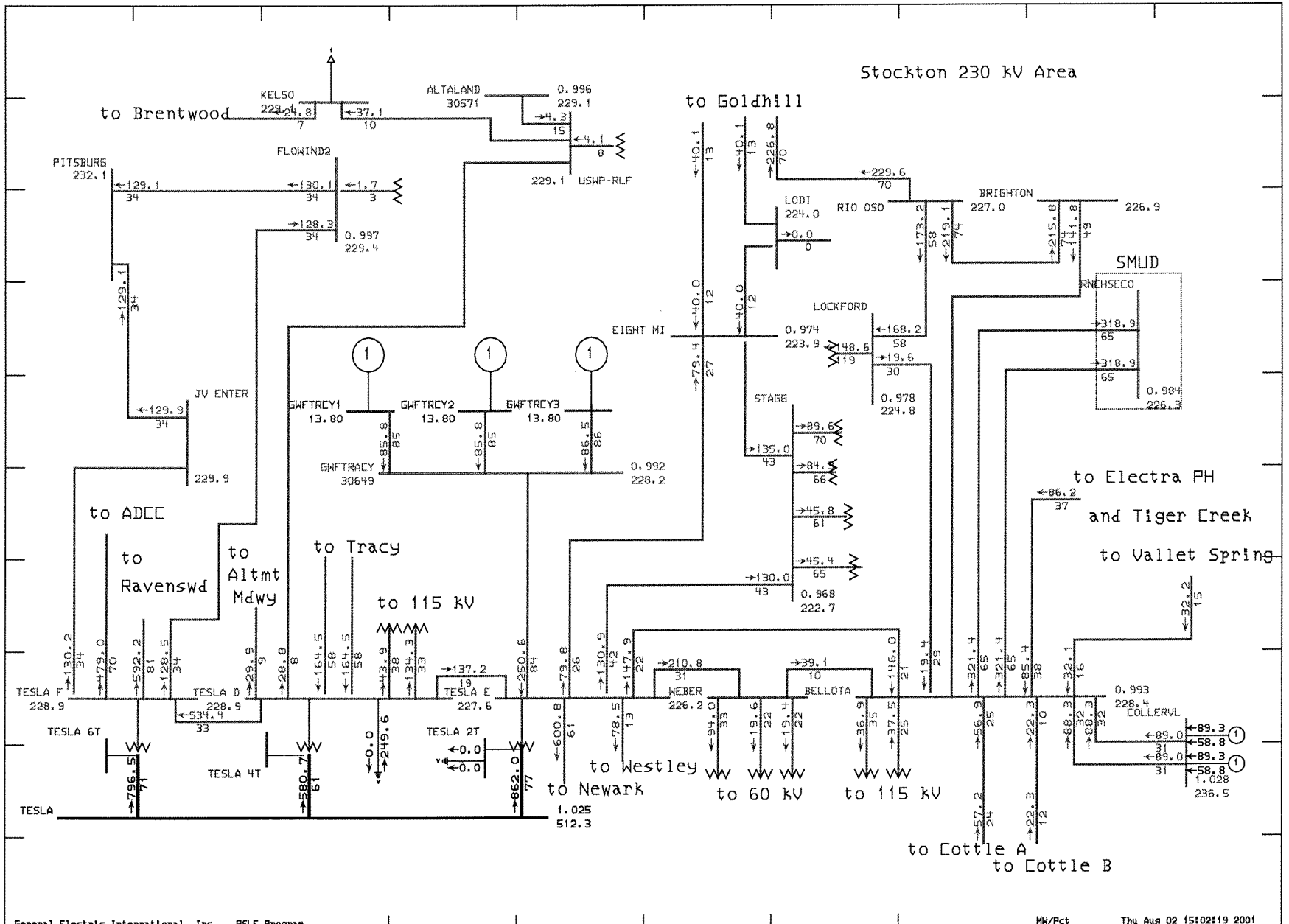

General Electric International, Inc. PSLF Program MW/Pct Thu Aug 02 15:02:19 2001

GENERAL ELECTRIC COMPANY

GWF 258 MW Tracy Power Plant Project
2003 Summer Peak Base Case, Steady State Study
GWF CT 1&2 at 85.9 MW and ST at 86.6 MW

Normal Operating Conditions
AFTER CASE

stockton_230_a.drw
03_a5_after_gwf_a.sav
Rating = 1

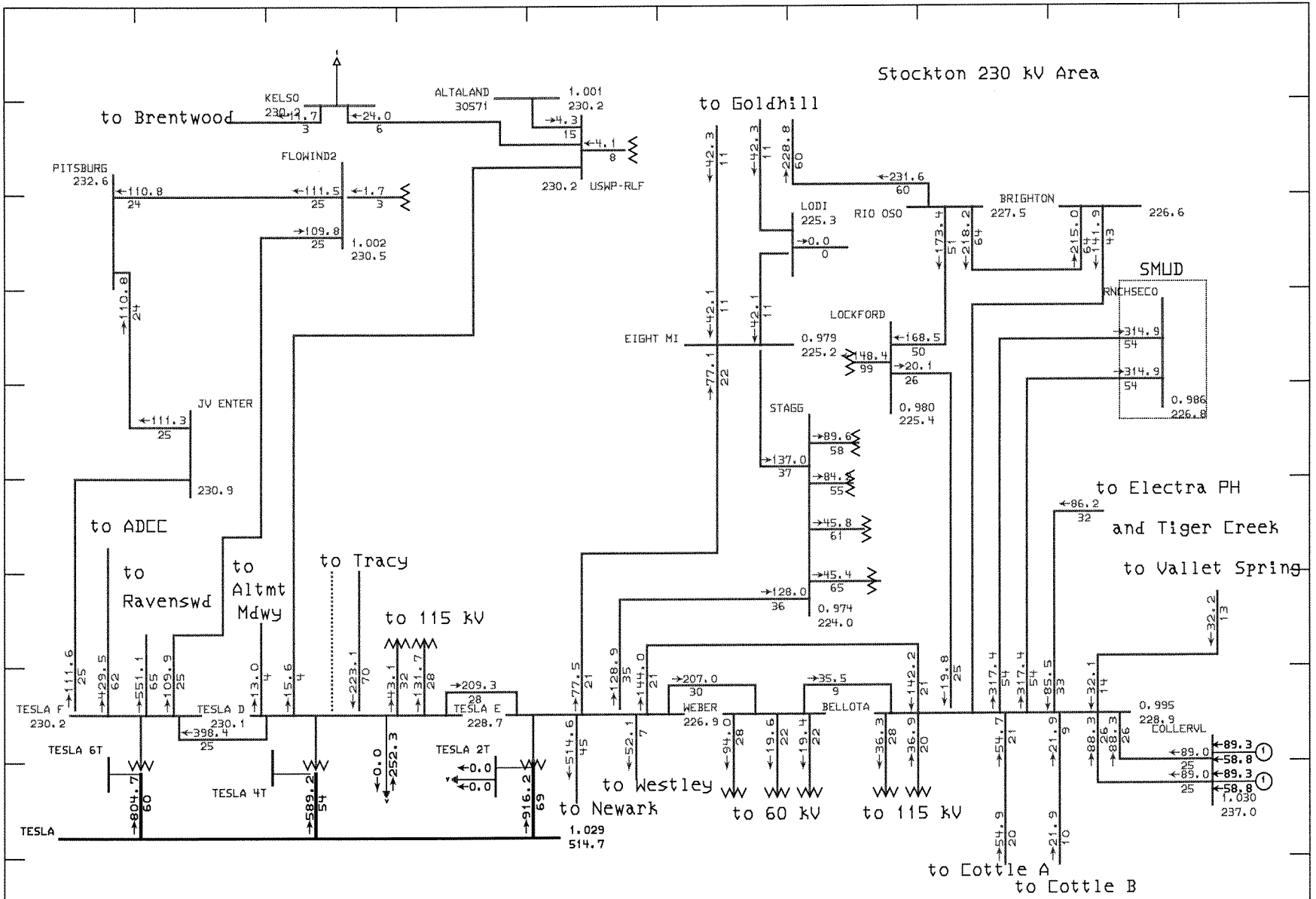
Stockton 230 kV Area
to Brentwood
KELSO
230.2
ALTALAND
30571
1.001
230.2
USWP-RLF
FLOWIND2
PITSBURG
232.6
1.002
230.5
JV ENTER
230.9
to ADCC
to Ravenswd
to Altmt Mdwy
to Tracy
to 115 kV
to Goldhill
LODI
225.3
RIO OSO
BRIGHTON
227.5
226.6
SMUD
RNCHSECO
LOCKFORD
EIGHT MI
0.979
225.2
0.980
225.4
STAGG
0.974
224.0
0.986
226.8
to Electra PH
and Tiger Creek
to Vallet Spring
TESLA F
230.2
TESLA D
230.1
TESLA E
228.7
WEBER
226.9
BELLOTA
0.995
228.9
COLLERVL
1.030
237.0
TESLA 6T
TESLA 4T
TESLA 2T
TESLA
1.029
514.7
to Westley
to Newark
to 60 kV
to 115 kV
to Cottle A
to Cottle B
General Electric International, Inc.
PSLF Program
MW/Pct
Thu Aug 02 14:33:14 2001
GENERAL ELECTRIC COMPANY
GWF 258 MW Tracy Power Plant Project
2003 Summer Peak Base Case, Steady State Study
Existing System, Before GWF Tracy Facilities
Tesla - Tracy 230 kV Line Outage
BEFORE CASE
stockton_230_a.drw
03_a5_before_gwf.sav
Rating = 2

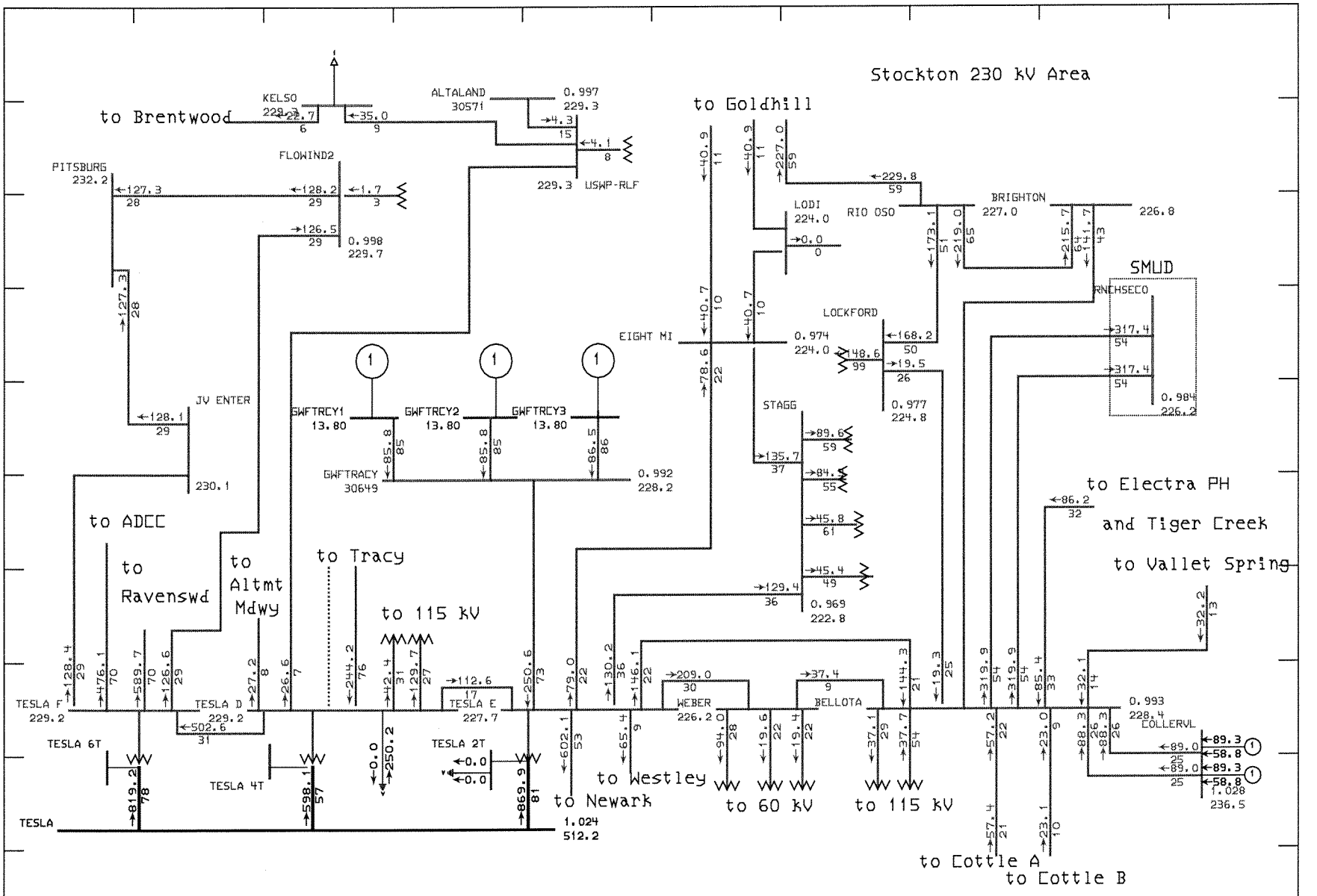

General Electric International, Inc. PSLF Program MW/Pct Thu Aug 02 15:04:50 2001

GENERAL ELECTRIC COMPANY

GWF 258 MW Tracy Power Plant Project
2003 Summer Peak Base Case, Steady State Study
GWF CT 1&2 at 85.9 MW and ST at 86.6 MW

Tesla - Tracy 230 kV Line Outage
AFTER CASE

stockton_230_a.drw
03_a5_after_gwf_a.sav
Rating = 2

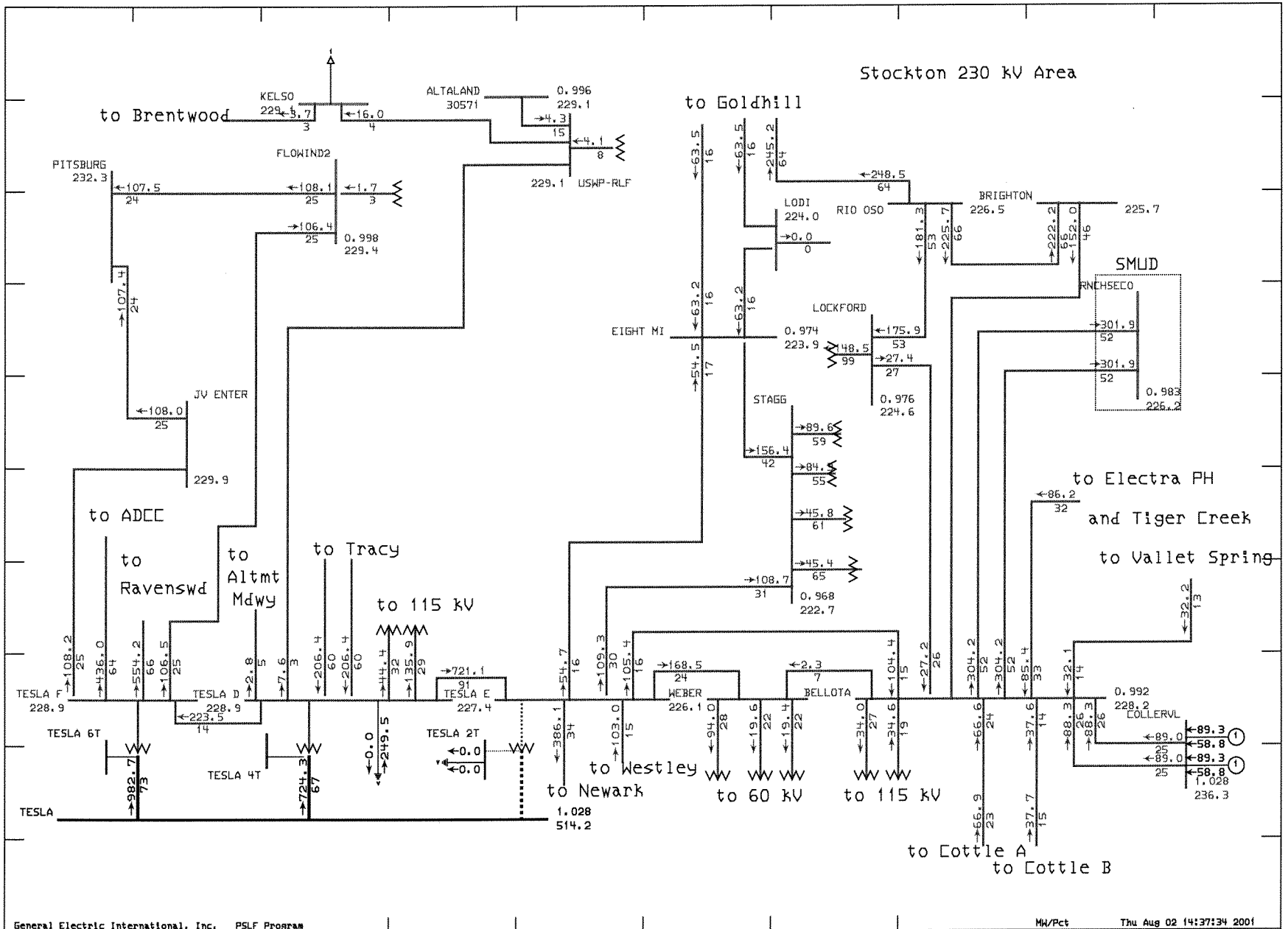

General Electric International, Inc. PSLF Program MW/Pct Thu Aug 02 14:37:34 2001

GENERAL ELECTRIC COMPANY

GWF 258 MW Tracy Power Plant Project
2003 Summer Peak Base Case, Steady State Study
Existing System, Before GWF Tracy Facilities

Tesla 500/230 kV Transformer Bank #2 Out
BEFORE CASE

stockton_230_a.drw
03_a5_before_gwf.sav
Rating = 2

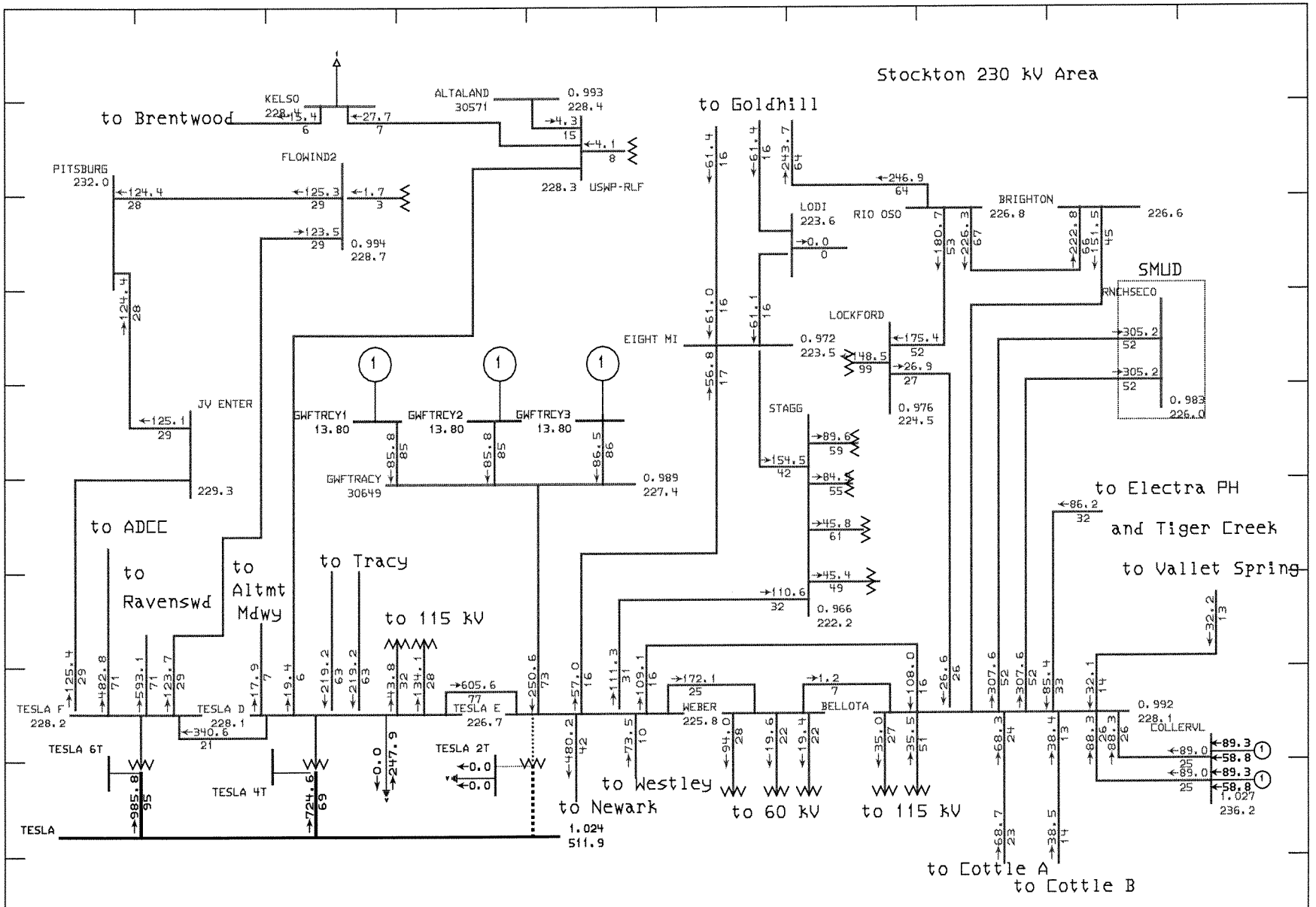

General Electric International, Inc. PSLF Program MW/Pct Thu Aug 02 15:21:58 2001

GENERAL ELECTRIC COMPANY

GWF 258 MW Tracy Power Plant Project
2003 Summer Peak Base Case, Steady State Study
GWF CT 1&2 at 85.9 MW and ST at 86.6 MW

Tesla 500/230 Transformer Bank #2 Out
AFTER CASE

stockton_230_a.drw
03_a5_after_gwf_a.sav
Rating = 2

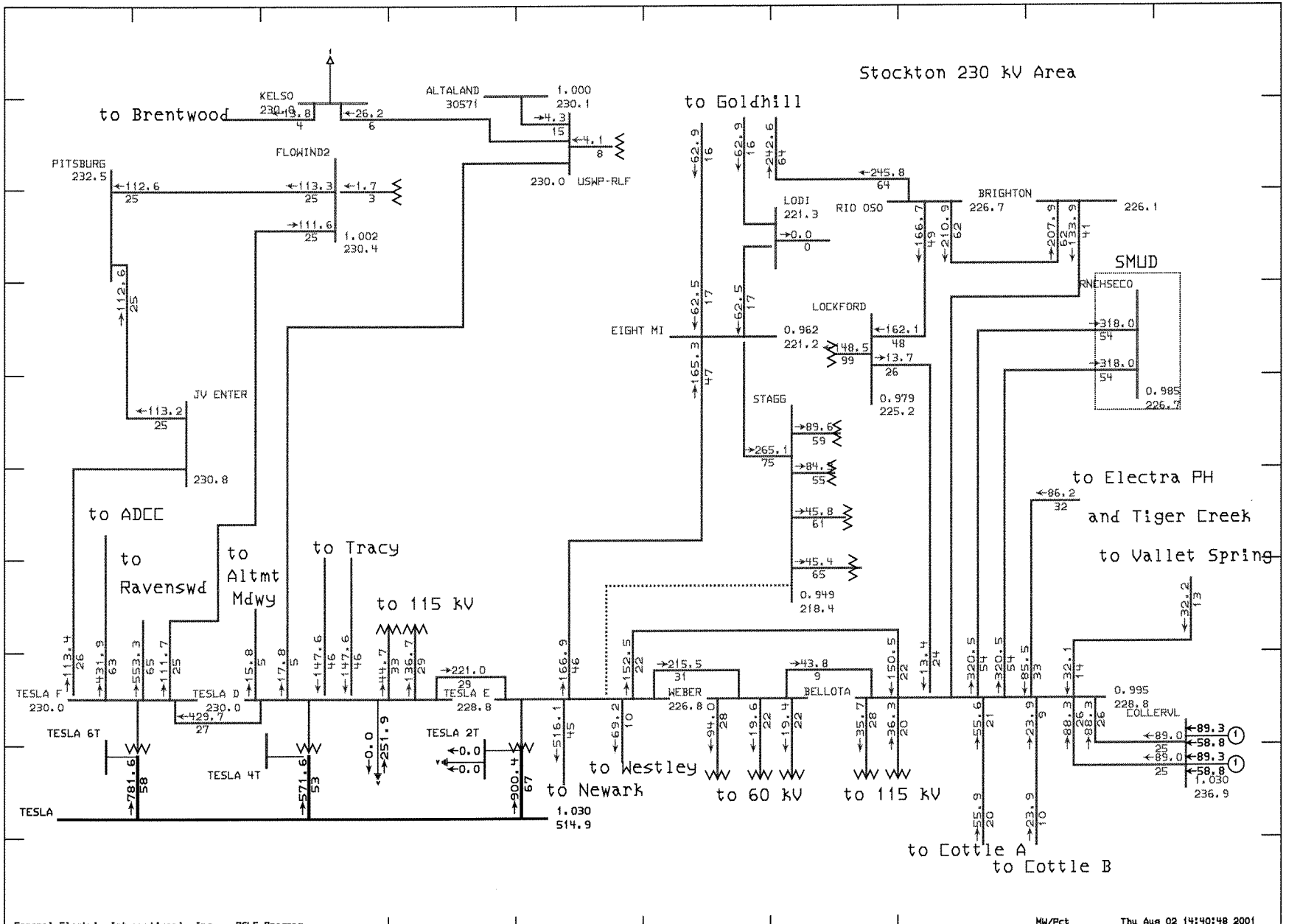

General Electric International, Inc. PSLF Program MW/Pct Thu Aug 02 14:40:48 2001

GENERAL ELECTRIC COMPANY

GWF 258 MW Tracy Power Plant Project
2003 Summer Peak Base Case, Steady State Study
Existing System, Before GWF Tracy Facilities

Tesla - Stagg 230 kV Line Outage
BEFORE CASE

stockton_230_a.drw
03_a5_before_gwf.sav
Rating = 2

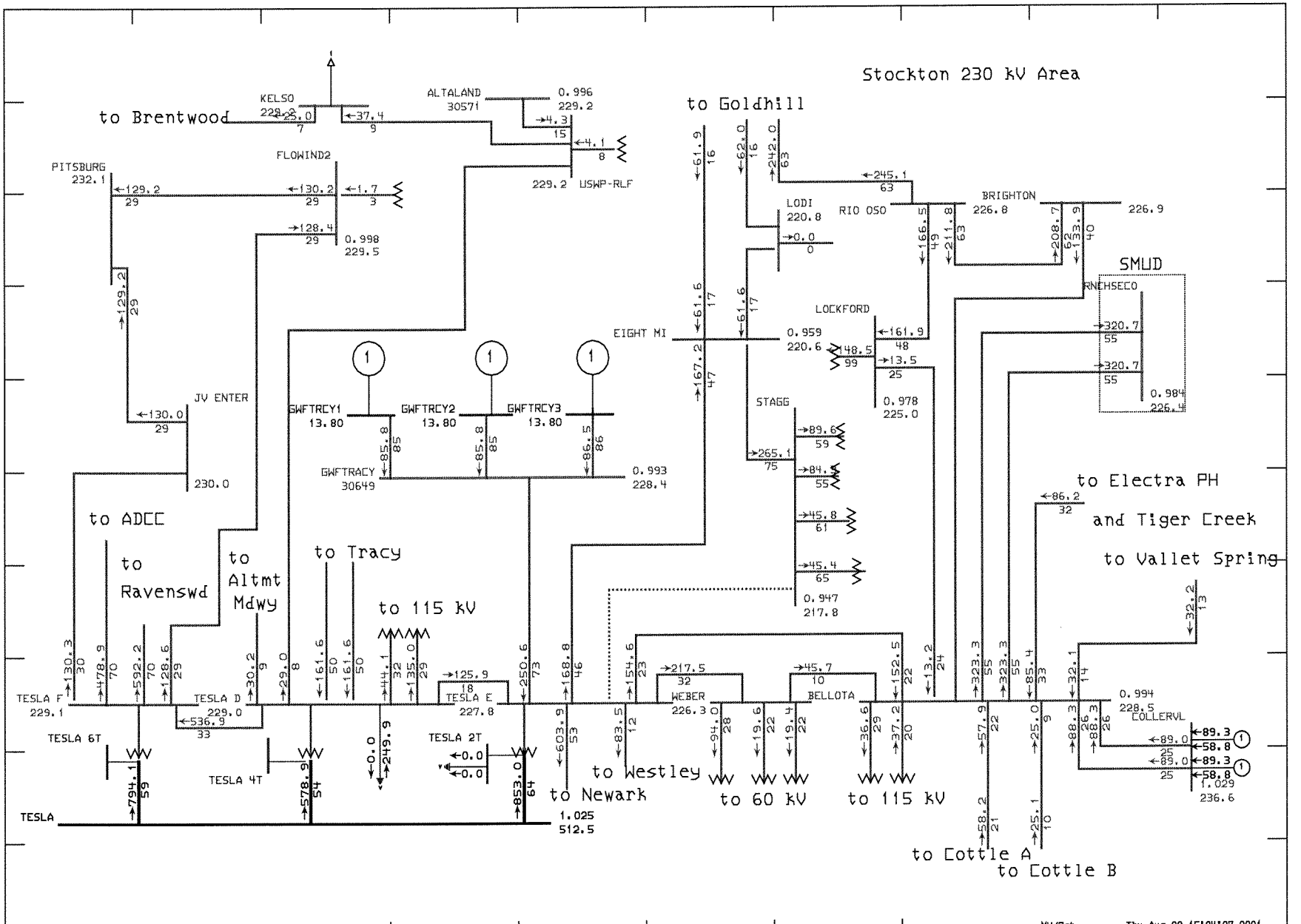

General Electric International, Inc. PSLF Program MW/Pct Thu Aug 02 15:24:27 2001

GENERAL ELECTRIC COMPANY

GWF 258 MW Tracy Power Plant Project
2003 Summer Peak Base Case, Steady State Study
GWF CT 1&2 at 85.9 MW and ST at 86.6 MW

Tesla - Stagg 230 kV Line Outage
AFTER CASE

stockton_230_a.drw
03_a5_after_gwf_a.sav
Rating = 2

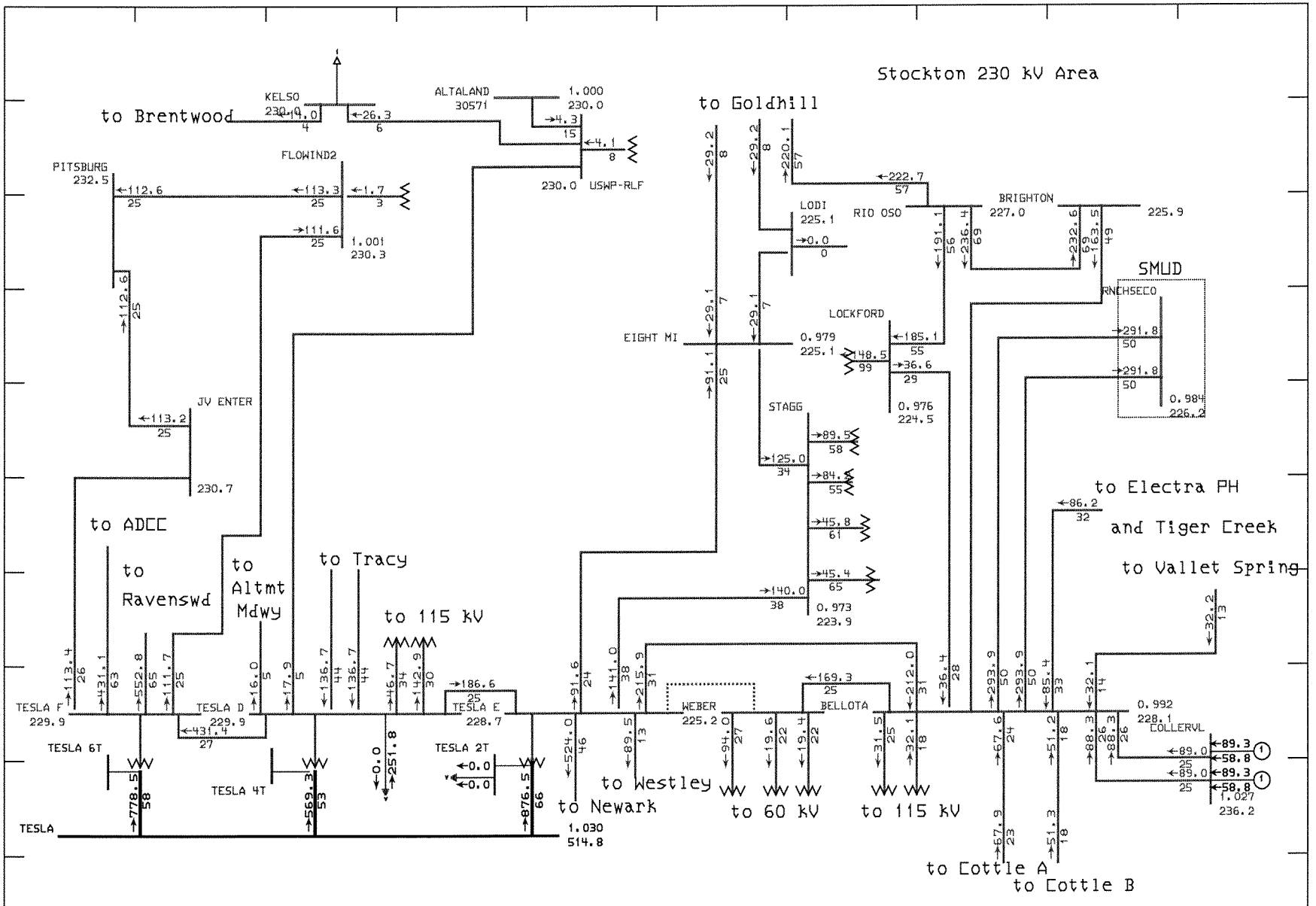

General Electric International, Inc. PSLF Program MW/Pct Thu Aug 02 14:49:23 2001

GENERAL ELECTRIC COMPANY

GWF 258 MW Tracy Power Plant Project
2003 Summer Peak Base Case, Steady State Study
Existing System, Before GWF Tracy Facilities

Tesla - Weber 230 kV Line Outage
BEFORE CASE

stockton_230_a.drW
03_a5_before_gwf.sav
Rating = 2

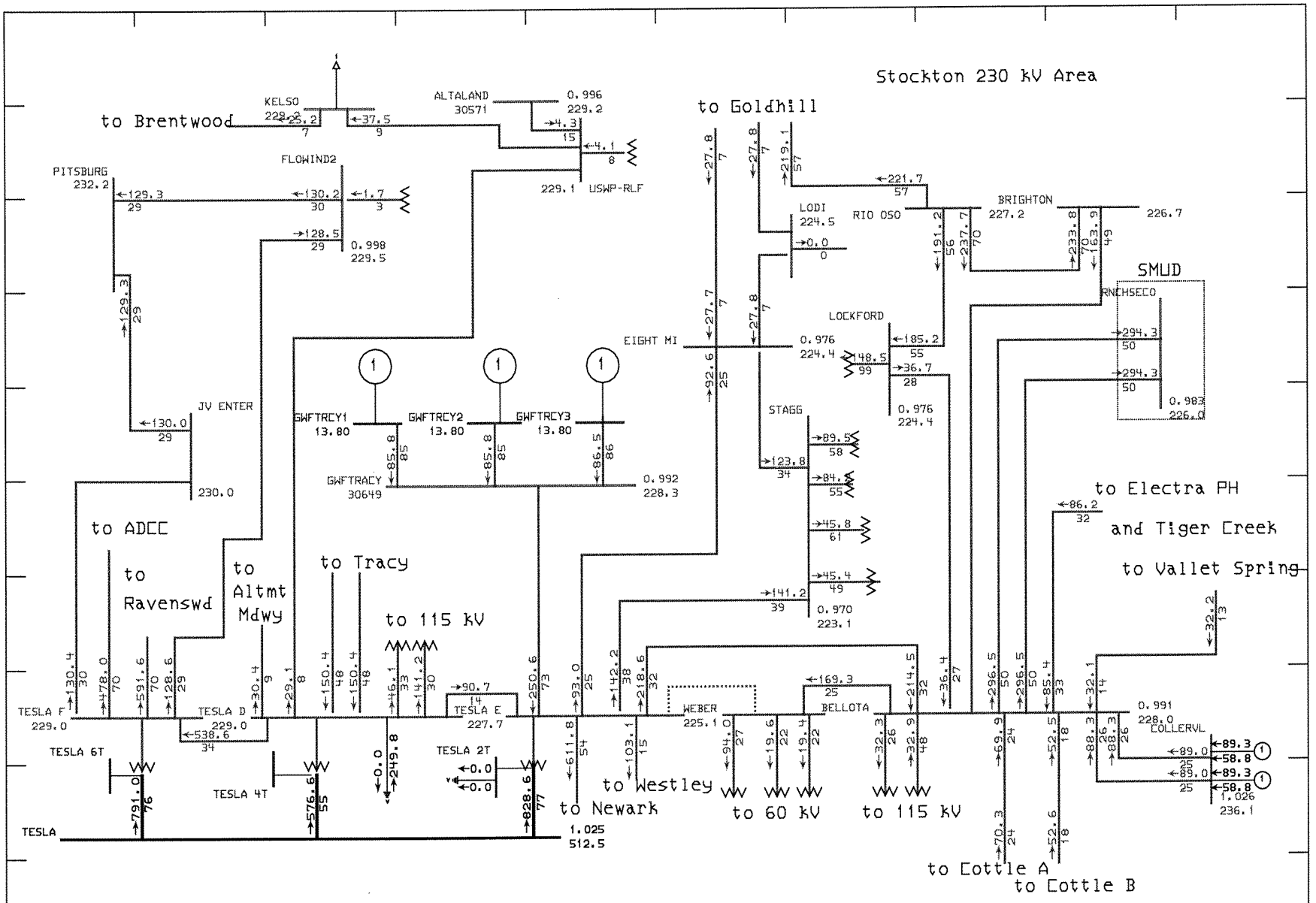

General Electric International, Inc. PSLF Program MW/Pct Thu Aug 02 15:26:39 2001

GENERAL ELECTRIC COMPANY

GWF 258 MW Tracy Power Plant Project
2003 Summer Peak Base Case, Steady State Study
GWF CT 1&2 at 85.9 MW and ST at 86.6 MW

Tesla - Weber 230 kV Line Outage
AFTER CASE

stockton_230_a.drw
03_a5_after_gwf_a.sav
Rating = 2

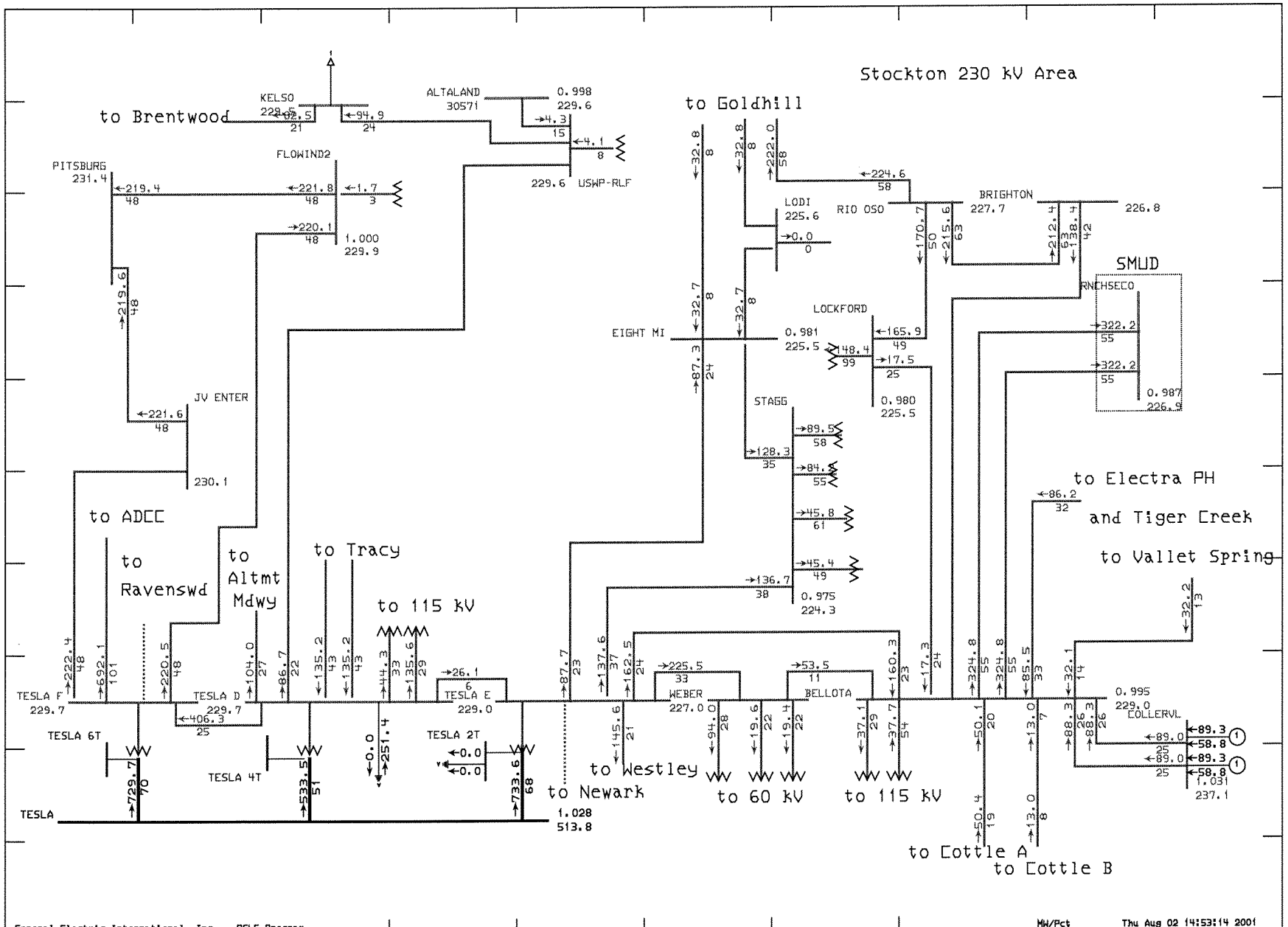

General Electric International, Inc. PSLF Program MW/Pct Thu Aug 02 14:53:14 2001

GENERAL ELECTRIC COMPANY

GWF 258 MW Tracy Power Plant Project
2003 Summer Peak Base Case, Steady State Study
Existing System, Before GWF Tracy Facilities

Tesla - Newark and Tesla - Ravenswood 230 kV Double Line Outage
BEFORE CASE

stockton_230_a.drw
03_a5_before_gwf.sav
Rating = 2

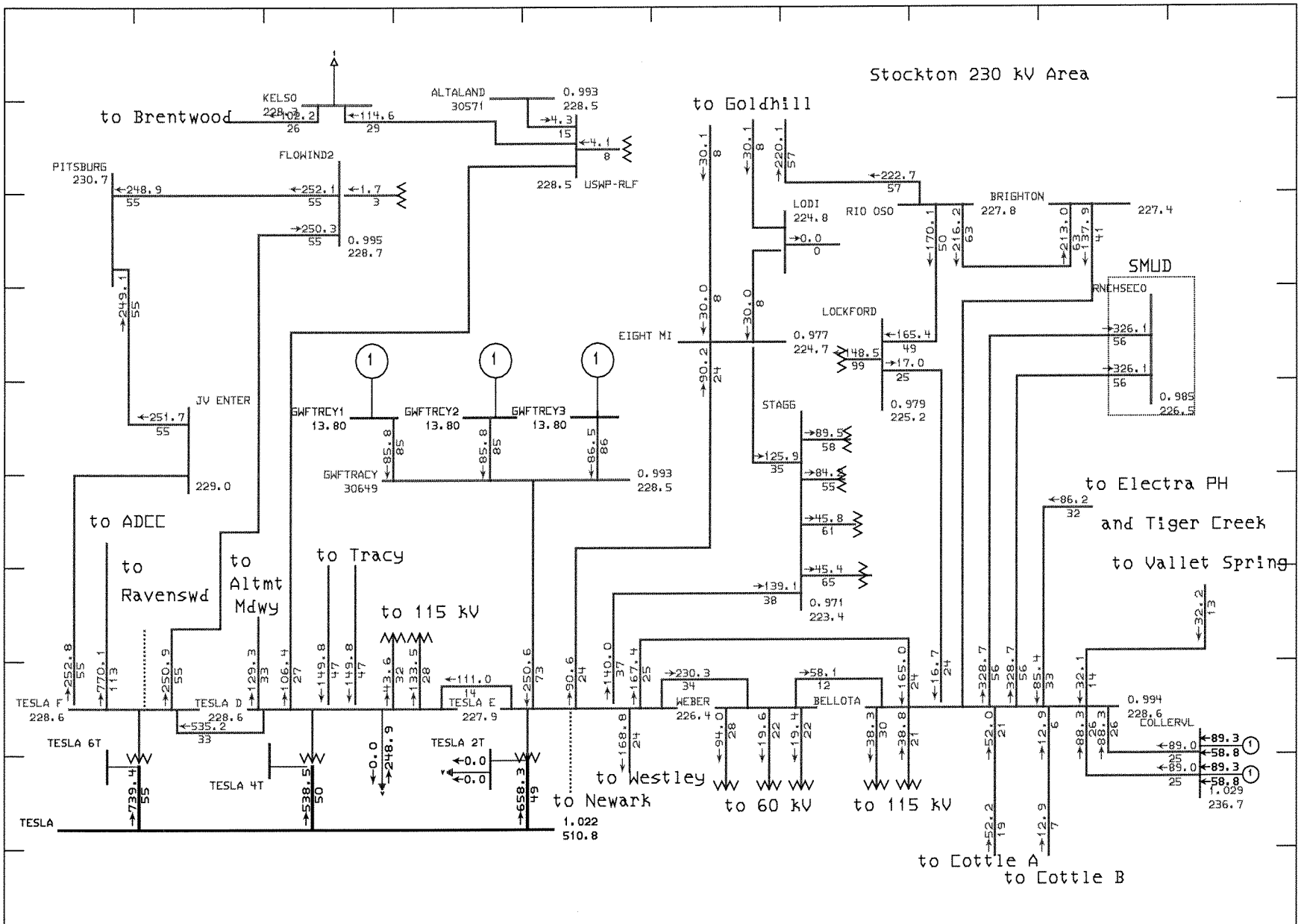

General Electric International, Inc. PSLF Program MW/Pct Thu Aug 02 15:29:18 2001

GENERAL ELECTRIC COMPANY

GWF 258 MW Tracy Power Plant Project
2003 Summer Peak Base Case, Steady State Study
GWF CT 1&2 at 85.9 MW and ST at 86.6 MW

Tesla - Newark and Tesla - Ravenswood 230 kV Double Line Outage
AFTER CASE

stockton_230_a.drw
03_a5_after_gwf_a.sav
Rating = 2

APPENDIX D

DYNAMICS DATA FOR GWF MACHINES

Steam Turbine: Generator Model

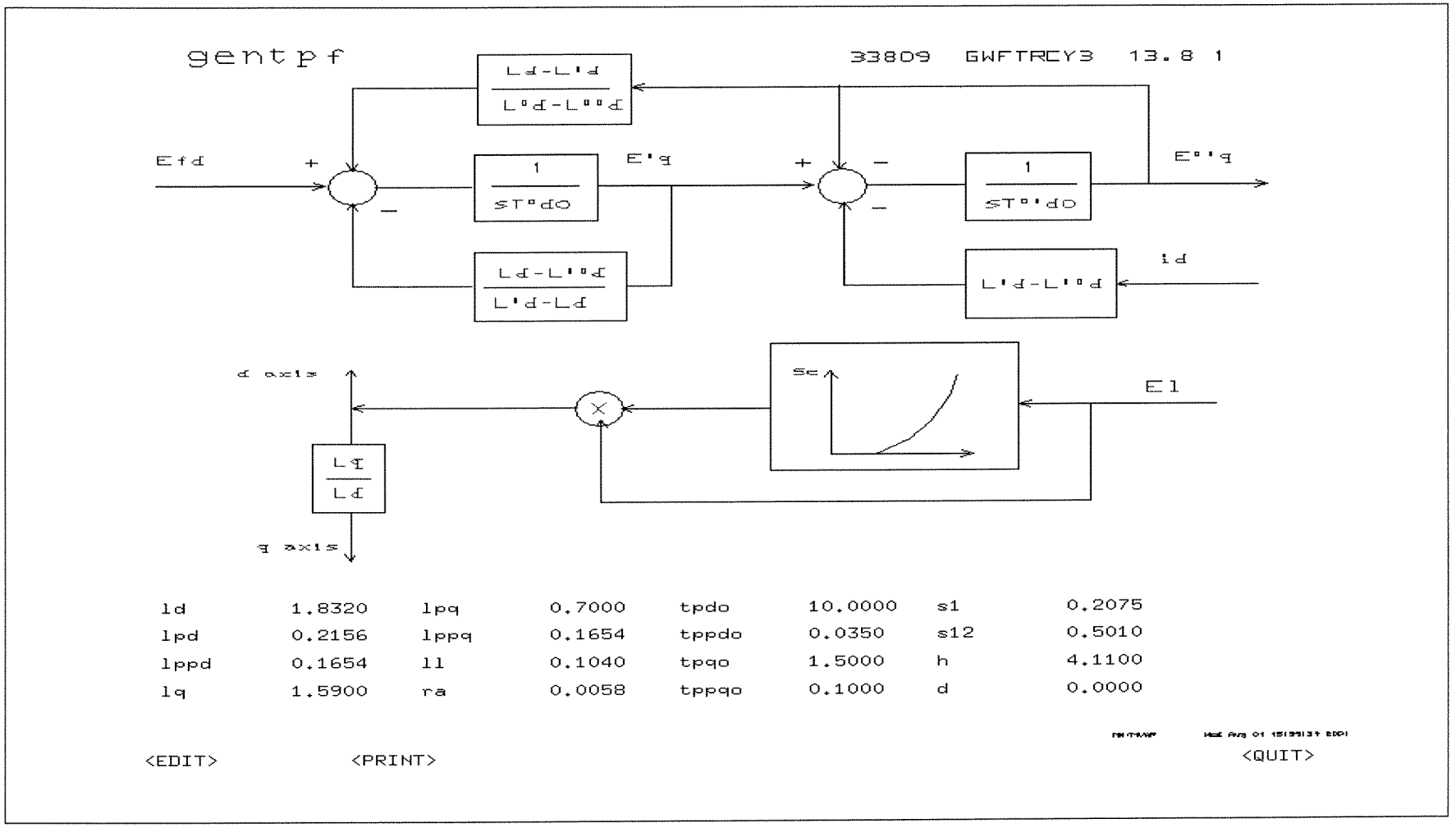

Steam Turbine: Excitation Model

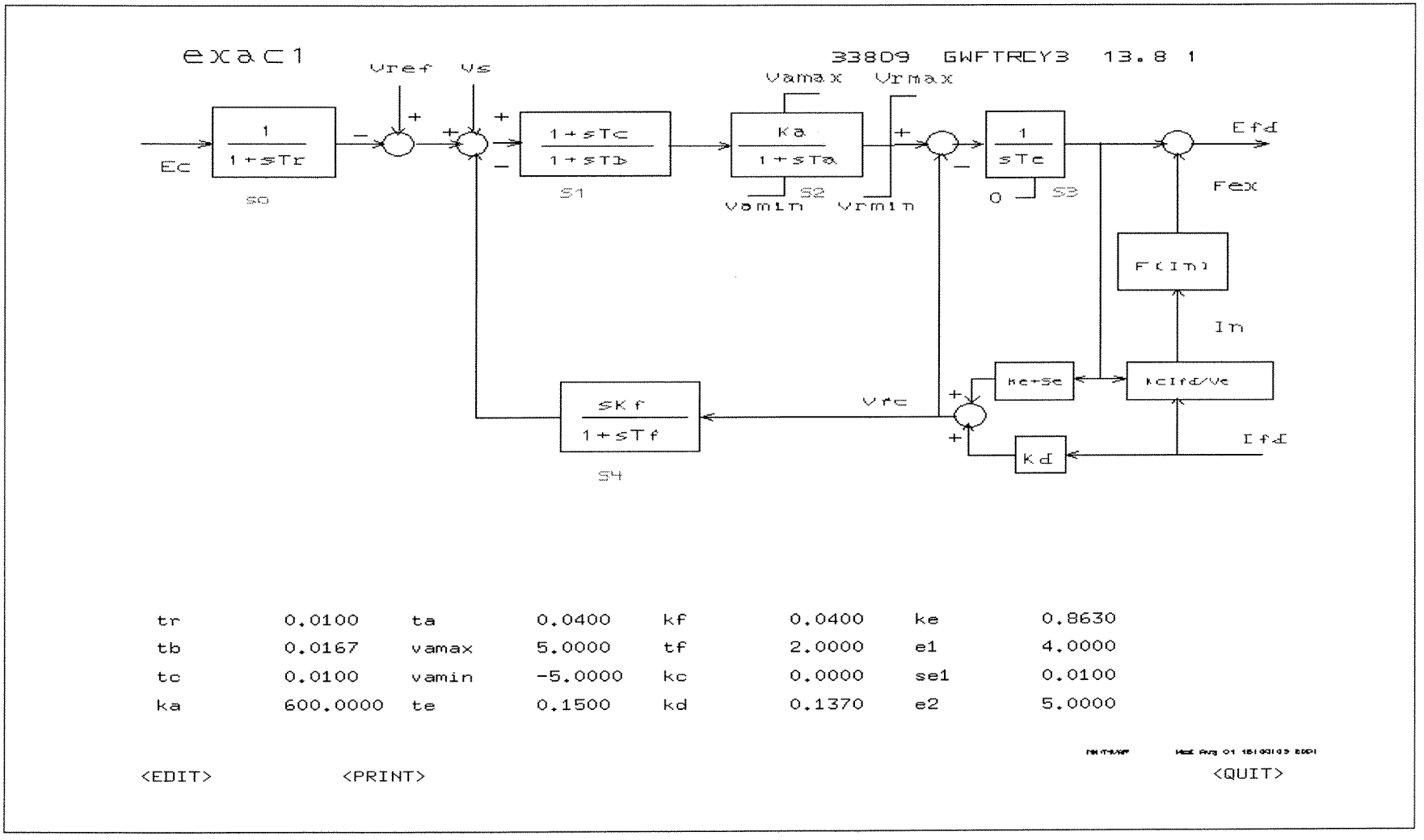

tr	0.0100	ta	0.0400	kf	0.0400	ke	0.8630
tb	0.0167	vamax	5.0000	tf	2.0000	e1	4.0000
tc	0.0100	vamin	-5.0000	kc	0.0000	se1	0.0100
ka	600.0000	te	0.1500	kd	0.1370	e2	5.0000

<EDIT> <PRINT> <QUIT>

Steam Turbine: Governor Model

ieeeg1 33809 GWFTRCY3 13.8 1

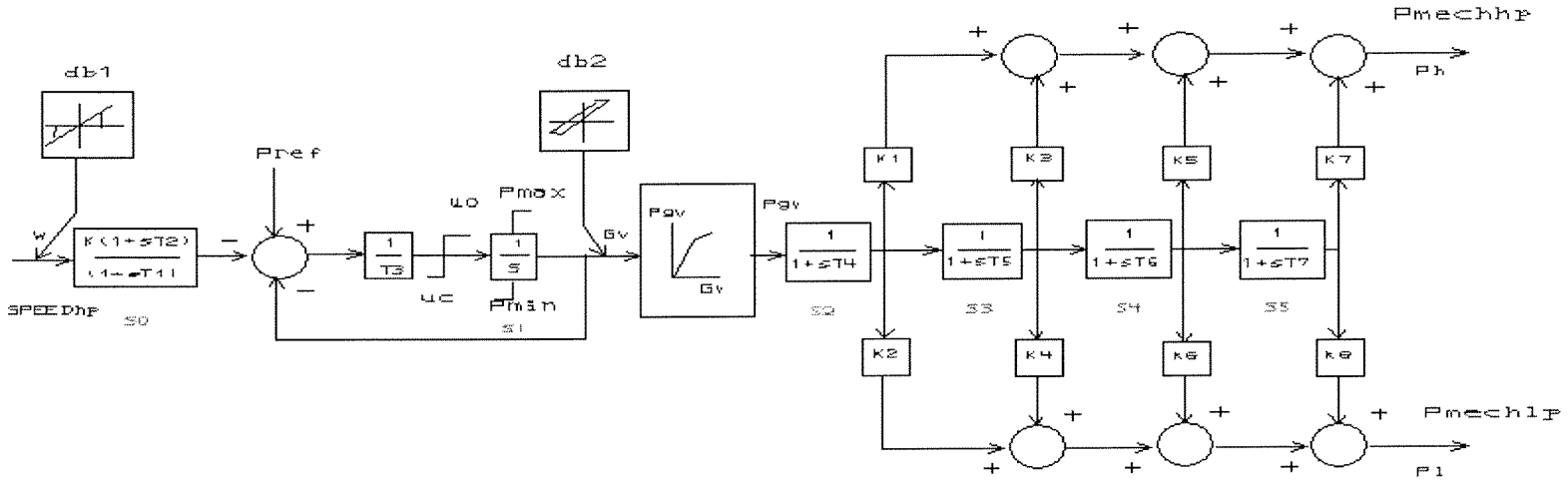

k	21.8300	uo	0.0600	t4	0.1000	k3	0.0000
t1	0.1500	uc	-0.1740	k1	1.0000	k4	0.0000
t2	0.0000	pmax	1.0000	k2	0.0000	t6	1.0000
t3	0.8700	pmin	0.0000	t5	1.0000	k5	0.0000

<EDIT> <PRINT> <QUIT>

Combustion Turbine 1 and 2: Generator Model

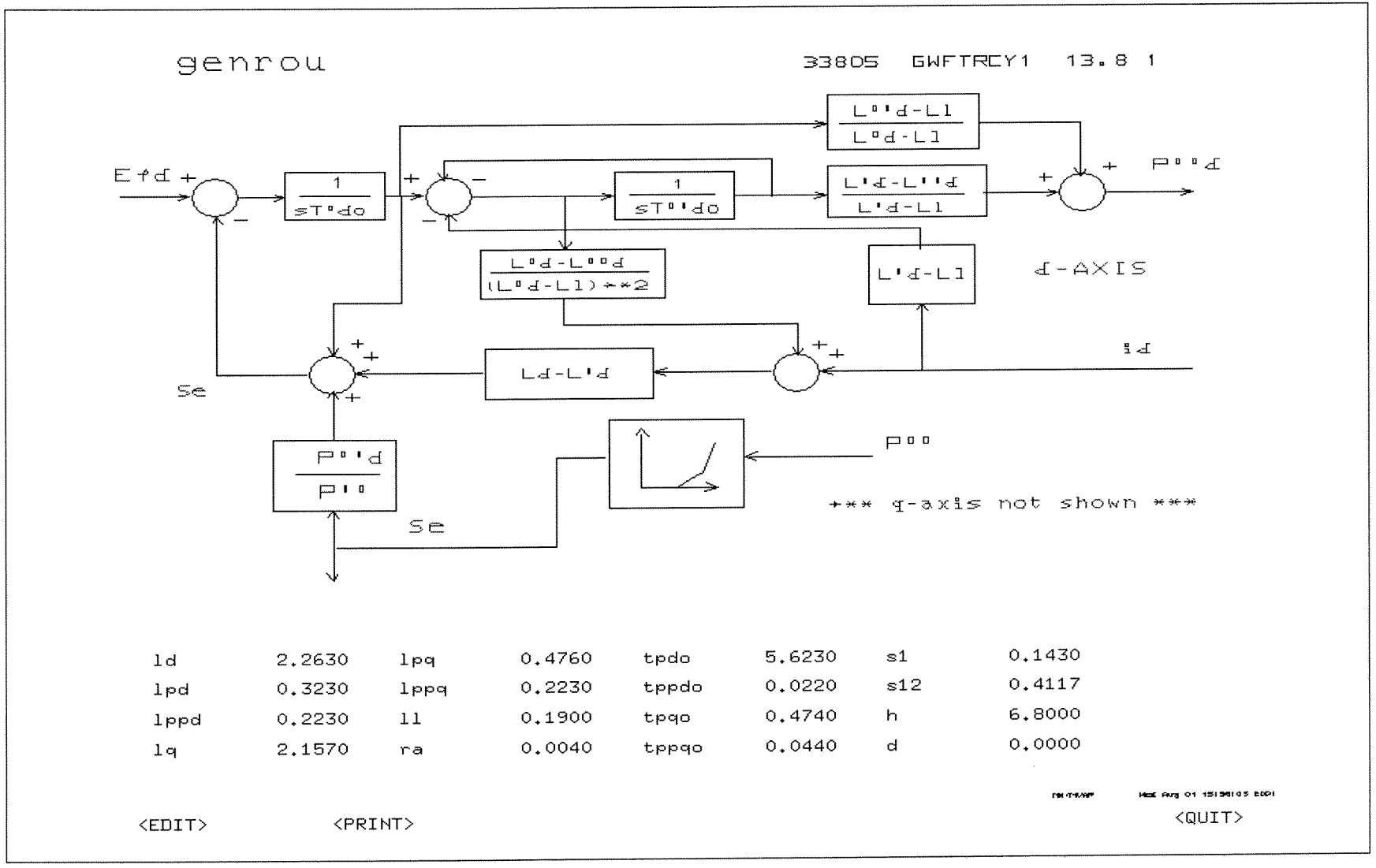

ld	2.2630	lpq	0.4760	tpdo	5.6230	s1	0.1430
lpd	0.3230	lppq	0.2230	tppdo	0.0220	s12	0.4117
lppd	0.2230	ll	0.1900	tpqo	0.4740	h	6.8000
lq	2.1570	ra	0.0040	tppqo	0.0440	d	0.0000

<EDIT> <PRINT> <QUIT>

Combustion Turbine 1 and 2: Excitation Model

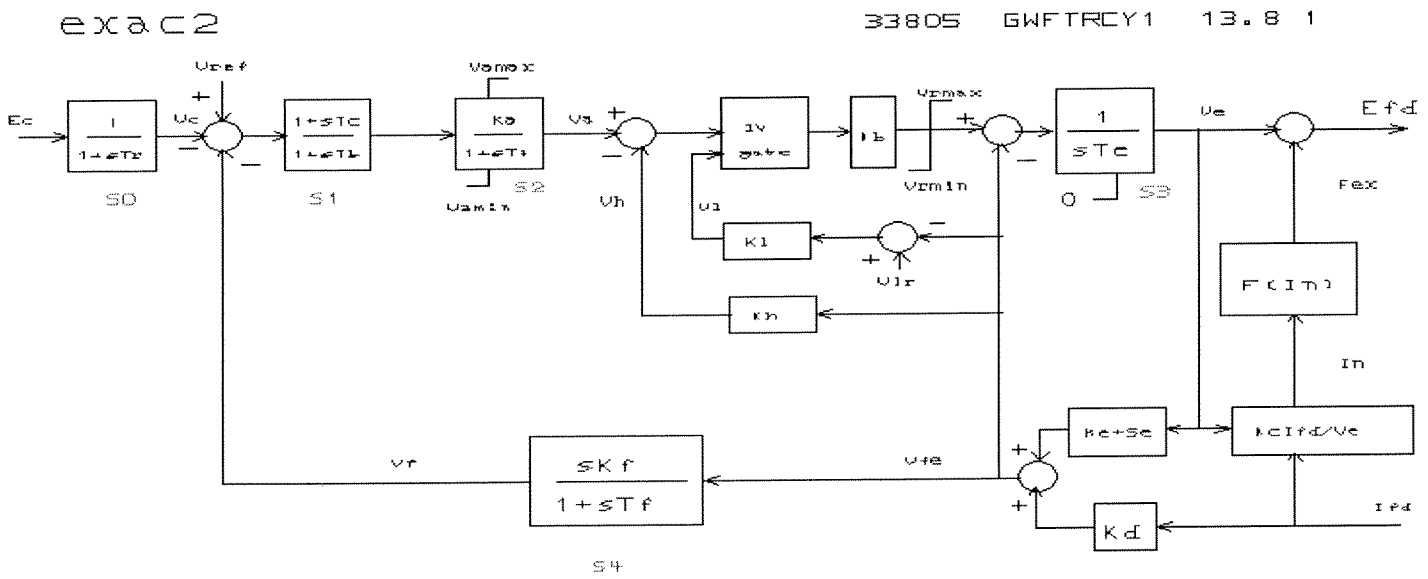

tr	0.0100	ta	0.0100	vrmax	27.3000	kh	0.0000
tb	1.0000	vamax	12.2000	vrmin	-27.3000	kf	0.0500
tc	1.0000	vamin	-12.2000	te	1.2000	tf	1.0000
ka	1000.0000	kb	1.0000	kl	4.0000	kc	0.1000

<EDIT> <PRINT> <QUIT>

Combustion Turbine 1 and 2: Governor Model

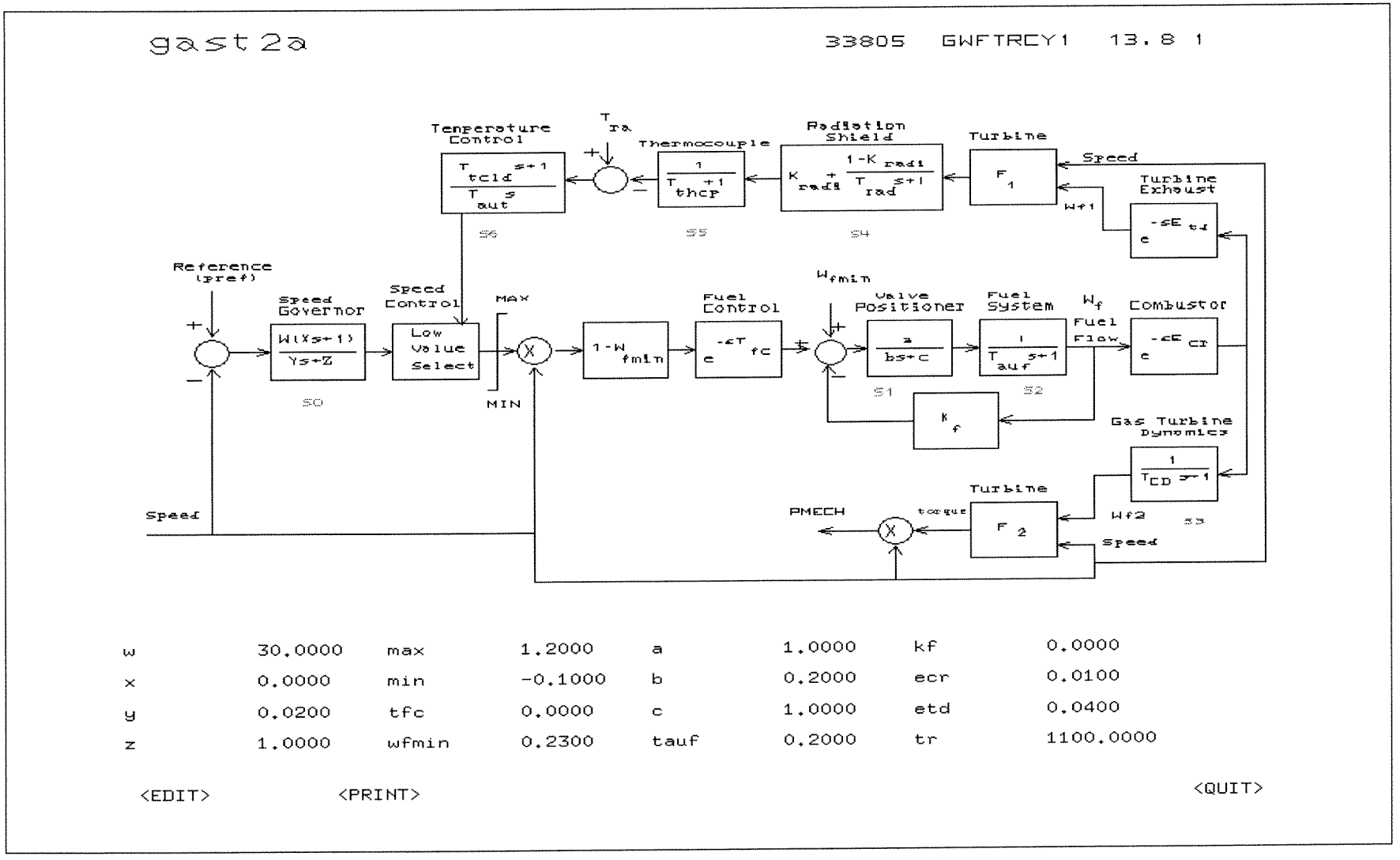

w	30.0000	max	1.2000	a	1.0000	kf	0.0000
x	0.0000	min	-0.1000	b	0.2000	ecr	0.0100
y	0.0200	tfc	0.0000	c	1.0000	etd	0.0400
z	1.0000	wfmin	0.2300	tauf	0.2000	tr	1100.0000

<EDIT> <PRINT> <QUIT>

Combustion Turbine 1 and 2: Power System Stabilizer Model

pss2a 33805 GWFTRCY1 13.8 1

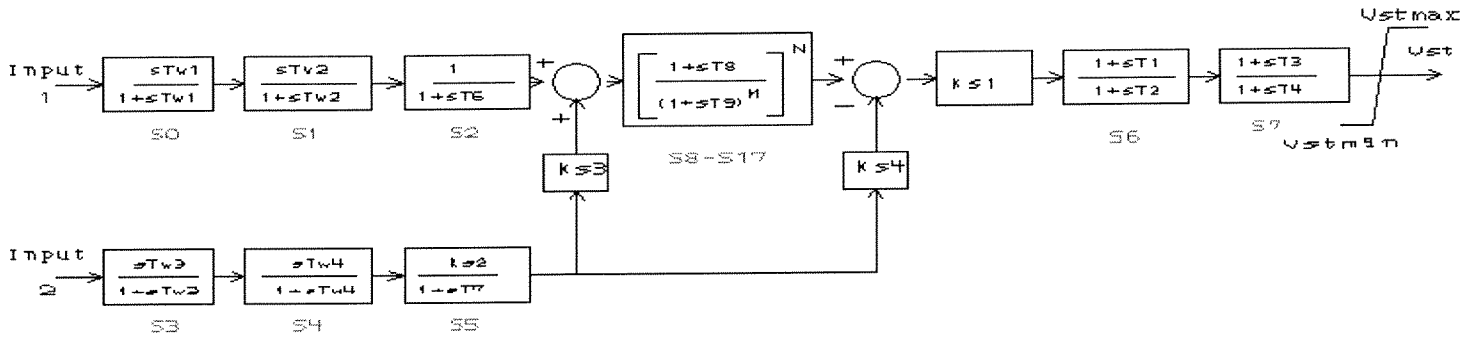

j1	1.0000	tw1	2.0000	t6	0.0000	ks4	1.0000
k1	0.0000	tw2	2.0000	t7	2.0000	t8	0.5000
j2	3.0000	tw3	2.0000	ks2	0.1800	t9	0.1000
k2	0.0000	tw4	0.0000	ks3	1.0000	n	1.0000

<EDIT> <PRINT> <QUIT>

APPENDIX E

STABILITY PLOTS

Category B, a) Full load rejection of the proposed 258 MW GWF Tracy Peaking Plant.

PLOT 1 : Project Generator Terminal Voltages and Angles
PLOT 2 : Project Generator Power and Speed
PLOT 3 : Selected Bus Voltages Adjacent to Fault
PLOT 4 : Selected Bus Frequencies Adjacent to Fault

GENERAL ELECTRIC COMPANY

1

Wed Aug 01 08:56:22 2001

C:\GWF\1\A\A_GWF_FullLdRej.chf

C:\GWF\03_a5_after_gwf_a.sav

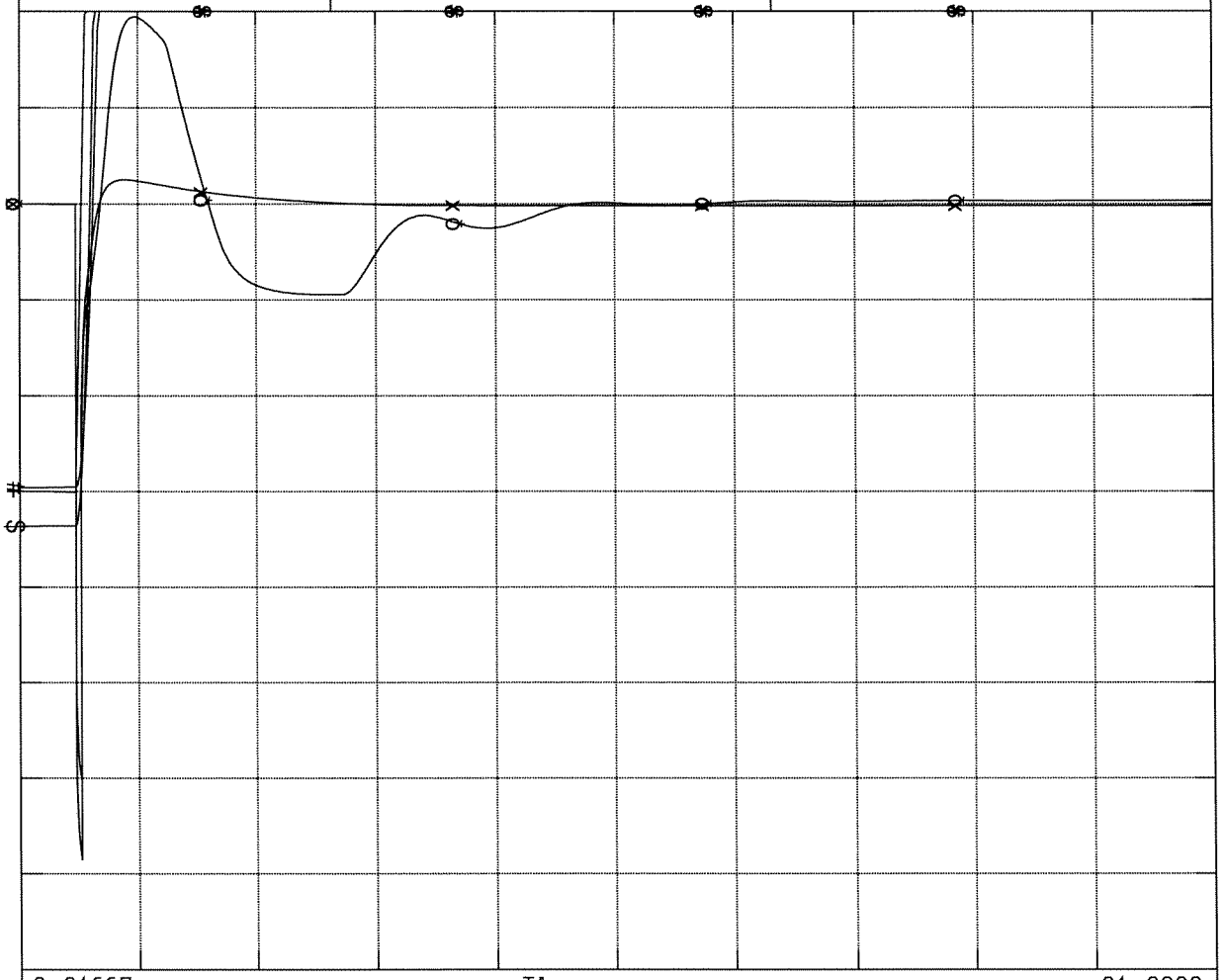

0.01667 Time, sec. 21.0000

0.2000	o	vt	33805	GWFTRCY1	13.80	1	1.2000
0.9900	+	spd	33805	GWFTRCY1	13.80	1	1.0100
0.2000	*	vt	33807	GWFTRCY2	13.80	1	1.2000
-100.0	#	ang	33807	GWFTRCY2	13.80	1	100.00
0.2000	x	vt	33809	GWFTRCY3	13.80	1	1.2000
-100.0	$	ang	33809	GWFTRCY3	13.80	1	100.00

GWF 258 MW Tracy Power Plant Project
2003 Summer Peak Base Case, Stability Study
GWF CT 1&2 @ 85.9 MW and ST @ 86.6 MW
3 phase 4 cycle fault at the GWF Tracy 230 kV bus followed
by a Full Load Rejection of GWF Tracy Units

GENERAL ELECTRIC COMPANY

2

Wed Aug 01 08:56:27 2001

C:\GWF\1\A\A_GWF_FullLdRej.chf

C:\GWF\03_a5_after_gwf_a.sav

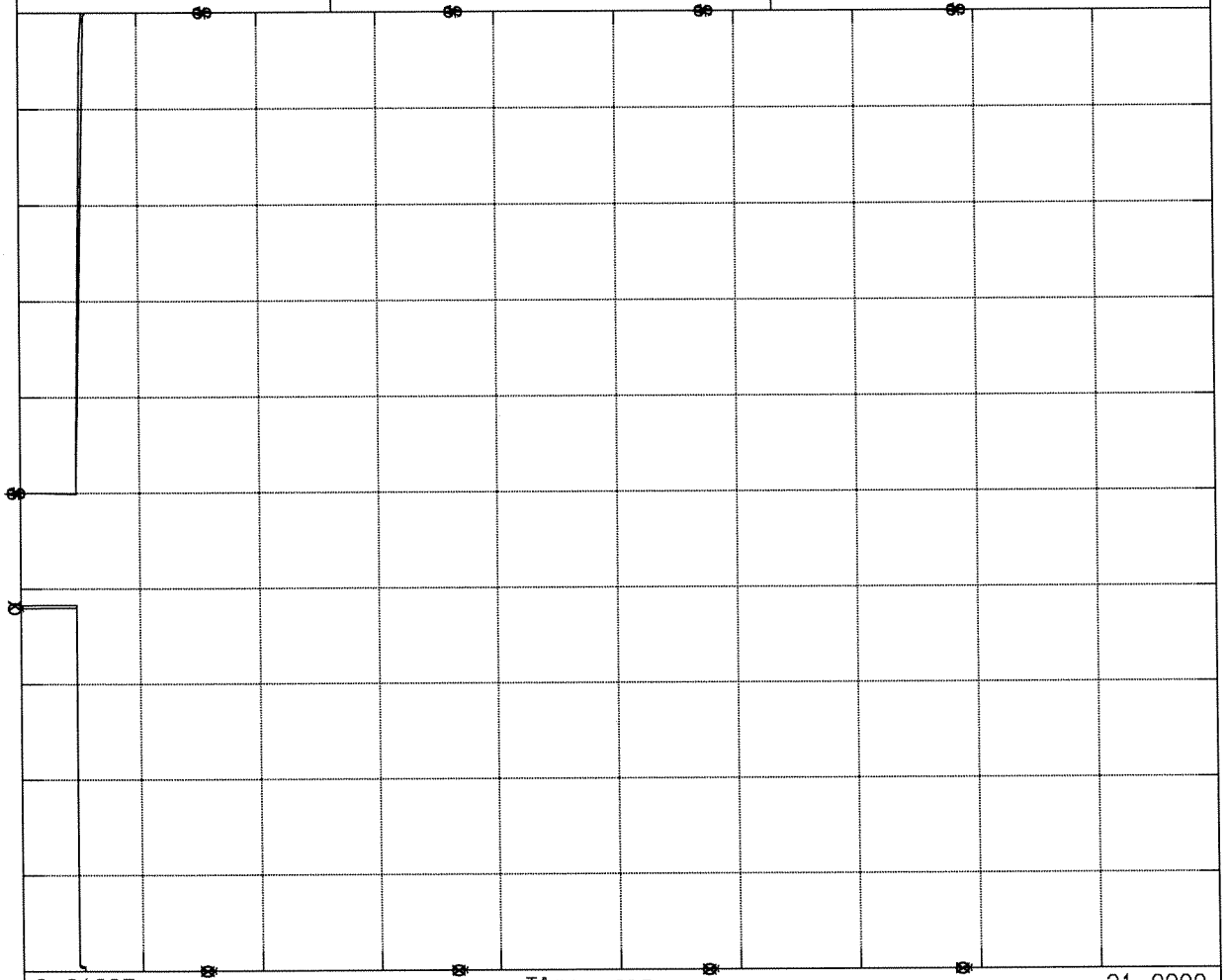

0.01667 Time, sec. 21.0000

0.0000	o	pg	33805	GWFTRCY1	13.80	1	226.20
0.9900	+	spd	33805	GWFTRCY1	13.80	1	1.0100
0.0000	*	pg	33807	GWFTRCY2	13.80	1	226.20
0.9900	#	spd	33807	GWFTRCY2	13.80	1	1.0100
0.0000	x	pg	33809	GWFTRCY3	13.80	1	226.20
0.9900	$	spd	33809	GWFTRCY3	13.80	1	1.0100

GWF 258 MW Tracy Power Plant Project
2003 Summer Peak Base Case, Stability Study
GWF CT 1&2 @ 85.9 MW and ST @ 86.6 MW
3 phase 4 cycle fault at the GWF Tracy 230 kV bus followed
by a Full Load Rejection of GWF Tracy Units

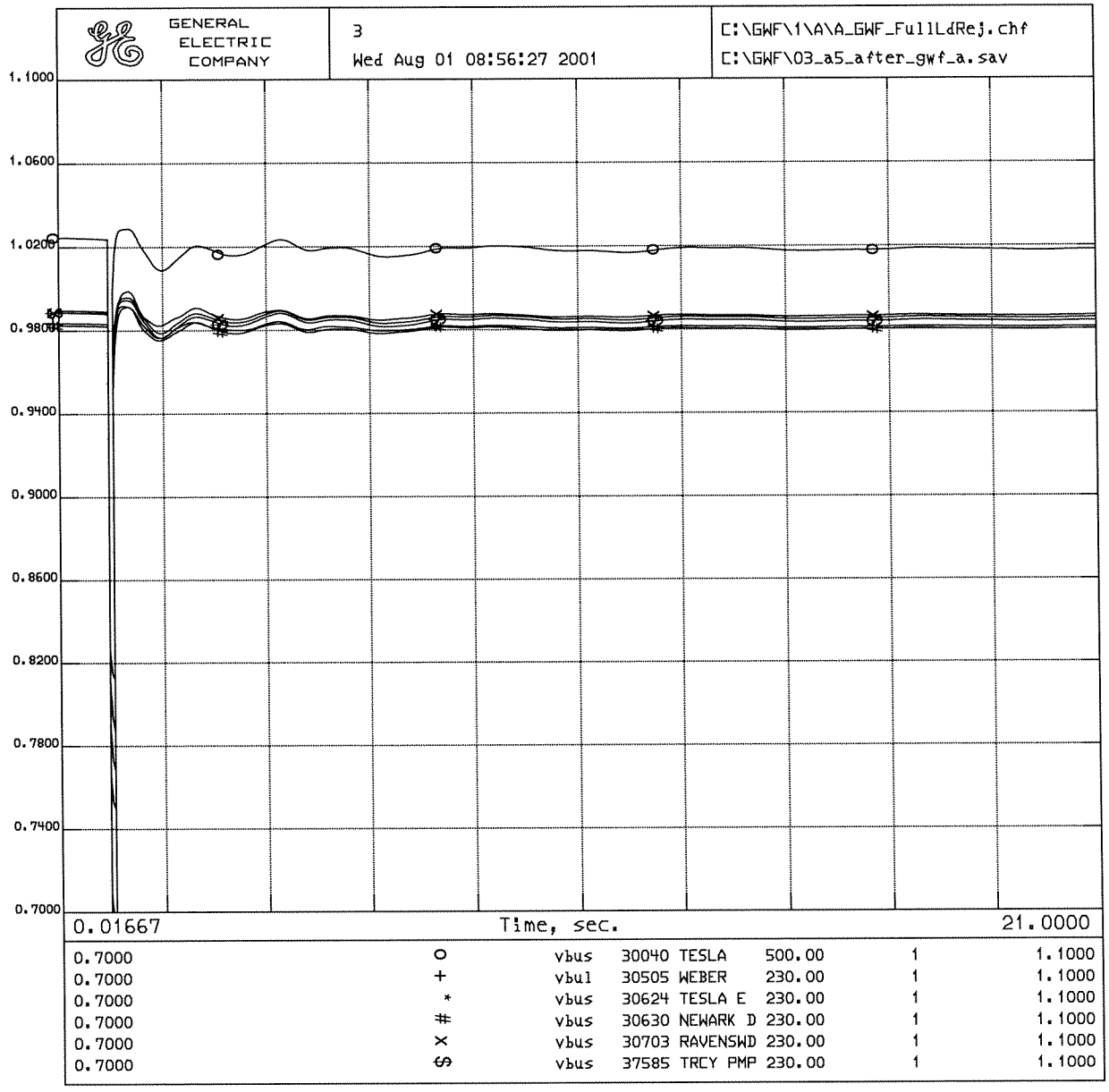

GWF 258 MW Tracy Power Plant Project
2003 Summer Peak Base Case, Stability Study
GWF CT 1&2 @ 85.9 MW and ST @ 86.6 MW
3 phase 4 cycle fault at the GWF Tracy 230 kV bus followed
by a Full Load Rejection of GWF Tracy Units

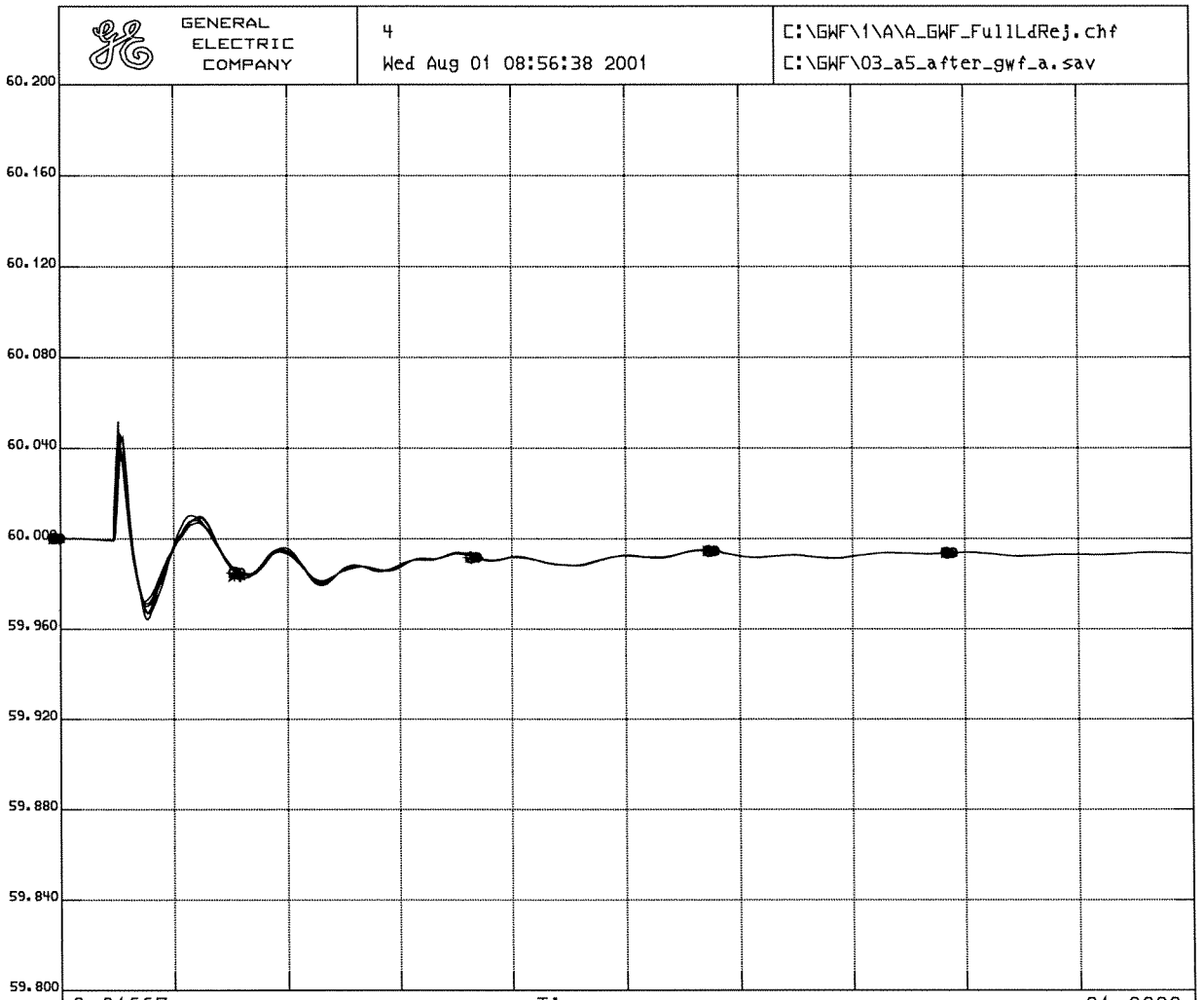

59.800	o	fbus	30040 TESLA	500.00	1	60.200
59.800	+	fbul	30505 WEBER	230.00	1	60.200
59.800	*	fbus	30624 TESLA E	230.00	1	60.200
59.800	#	fbus	30630 NEWARK D	230.00	1	60.200
59.800	×	fbus	30703 RAVENSWD	230.00	1	60.200
59.800	$	fbus	37585 TRCY PMP	230.00	1	60.200

GWF 258 MW Tracy Power Plant Project
2003 Summer Peak Base Case, Stability Study
GWF CT 1&2 @ 85.9 MW and ST @ 86.6 MW
3 phase 4 cycle fault at the GWF Tracy 230 kV bus followed
by a Full Load Rejection of GWF Tracy Units

Category B, c) A three-phase fault with a normal 6-cycle clearing time at the Tesla 230 kV bus, followed by loss of the Tesla-Ravenswood 230 kV line.

PLOT 1 : Project Generator Terminal Voltages and Angles
PLOT 2 : Project Generator Power and Speed
PLOT 3 : Selected Bus Voltages Adjacent to Fault
PLOT 4 : Selected Bus Frequencies Adjacent to Fault

GENERAL ELECTRIC COMPANY

1

Wed Aug 01 08:57:46 2001

C:\GWF\1\C\C_Tesla-Ravenswood.chf

C:\GWF\03_a5_after_gwf_a.sav

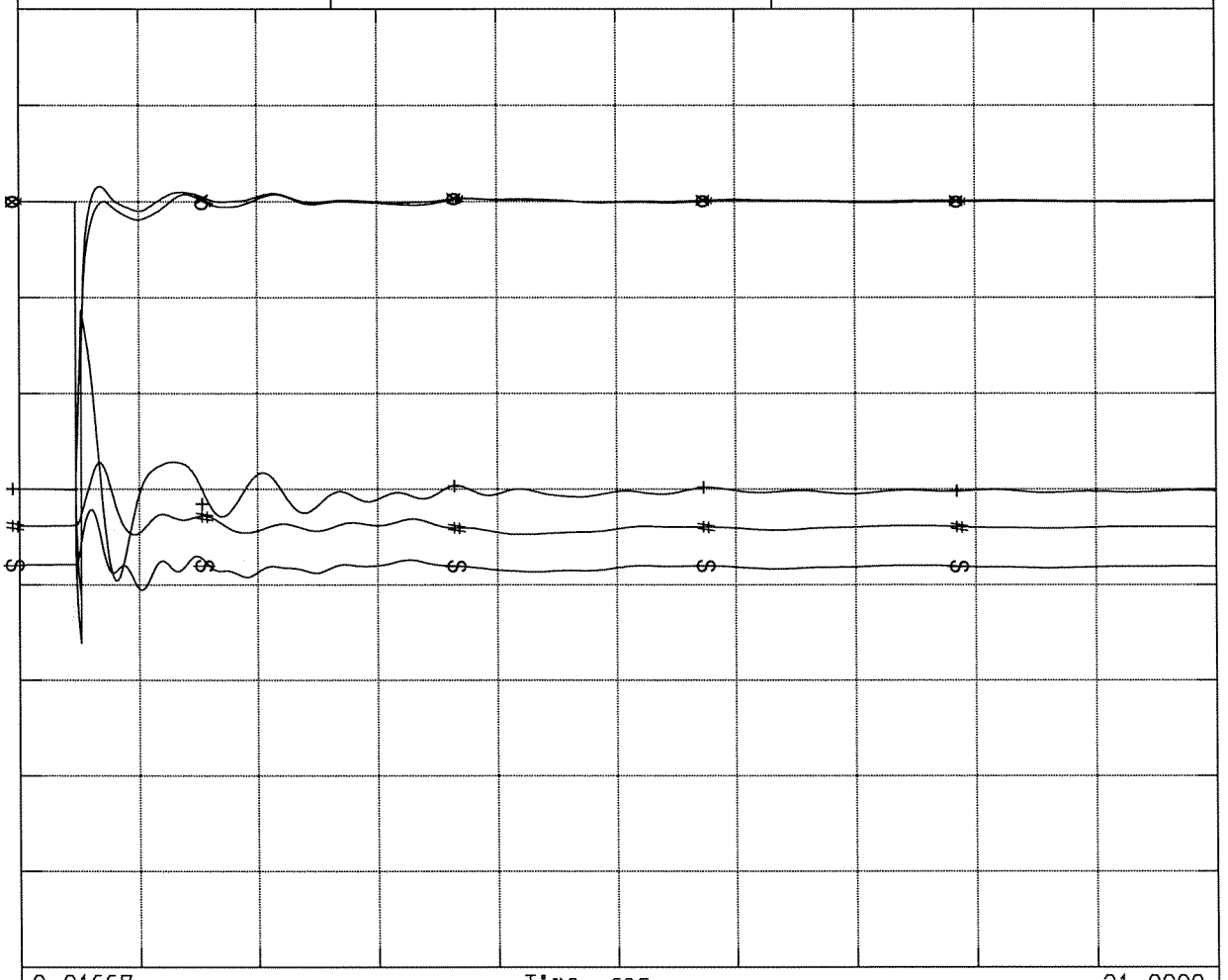

0.01667 Time, sec. 21.0000

0.2000	o	vt	33805	GWFTRCY1	13.80	1	1.2000
0.9900	+	spd	33805	GWFTRCY1	13.80	1	1.0100
0.2000	*	vt	33807	GWFTRCY2	13.80	1	1.2000
-100.0	#	ang	33807	GWFTRCY2	13.80	1	100.00
0.2000	x	vt	33809	GWFTRCY3	13.80	1	1.2000
-100.0	∽	ang	33809	GWFTRCY3	13.80	1	100.00

GWF 258 MW Tracy Power Plant Project
2003 Summer Peak Base Case, Stability Study
GWF CT 1&2 @ 85.9 MW and ST @ 86.6 MW
3 phase 6 cycle fault at the Tesla 230 kV bus followed
by loss of the Tesla - Ravenswood 230 kV line.

GENERAL ELECTRIC COMPANY

2

Wed Aug 01 08:57:52 2001

C:\GWF\1\C\C_Tesla-Ravenswood.chf

C:\GWF\03_a5_after_gwf_a.sav

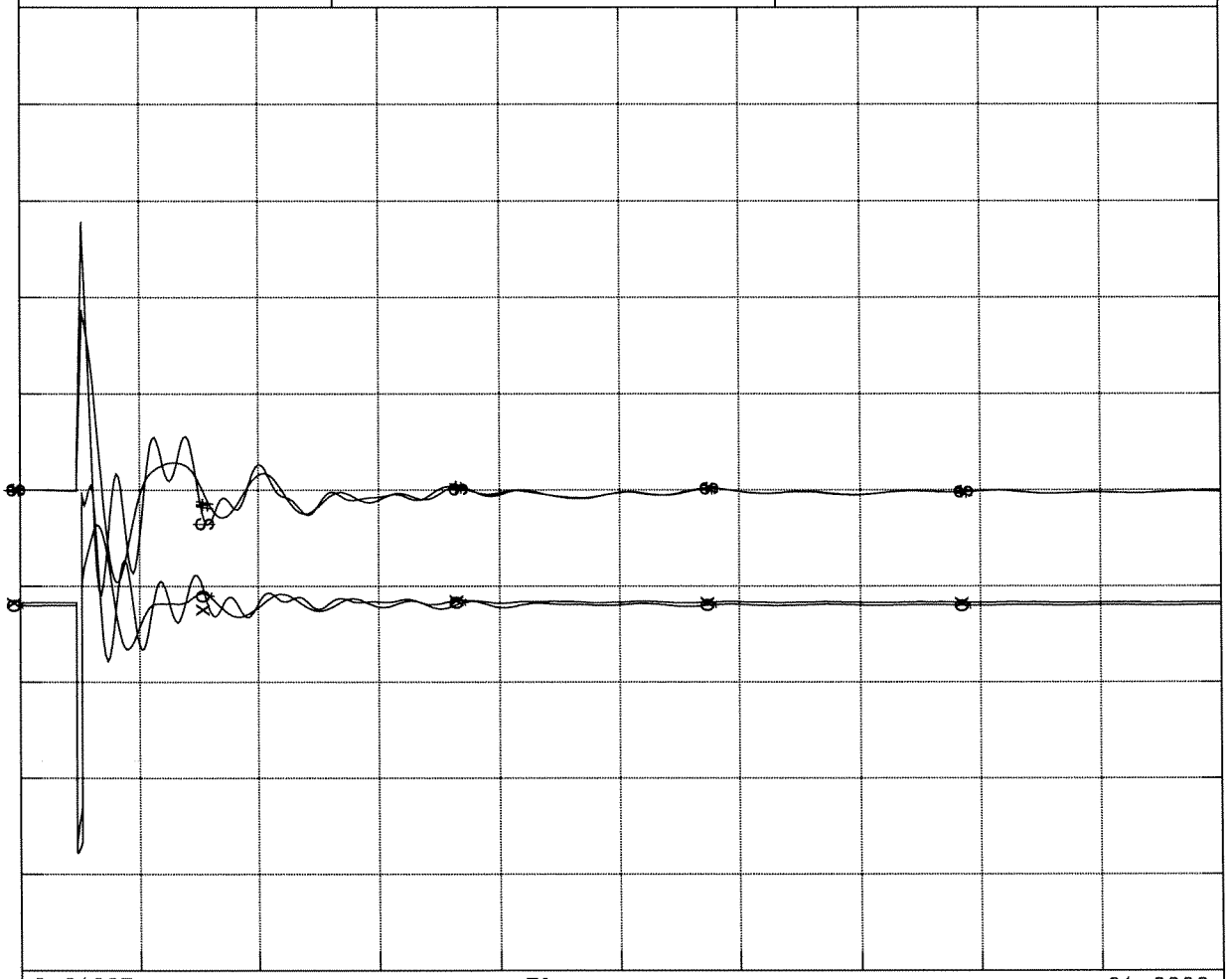

0.01667 Time, sec. 21.0000

0.0000	o	pg	33805	GWFTRCY1	13.80	1	226.20
0.9900	+	spd	33805	GWFTRCY1	13.80	1	1.0100
0.0000	*	pg	33807	GWFTRCY2	13.80	1	226.20
0.9900	#	spd	33807	GWFTRCY2	13.80	1	1.0100
0.0000	x	pg	33809	GWFTRCY3	13.80	1	226.20
0.9900	$	spd	33809	GWFTRCY3	13.80	1	1.0100

GWF 258 MW Tracy Power Plant Project
2003 Summer Peak Base Case, Stability Study
GWF CT 1&2 @ 85.9 MW and ST @ 86.6 MW
3 phase 6 cycle fault at the Tesla 230 kV bus followed
by loss of the Tesla - Ravenswood 230 kV line.

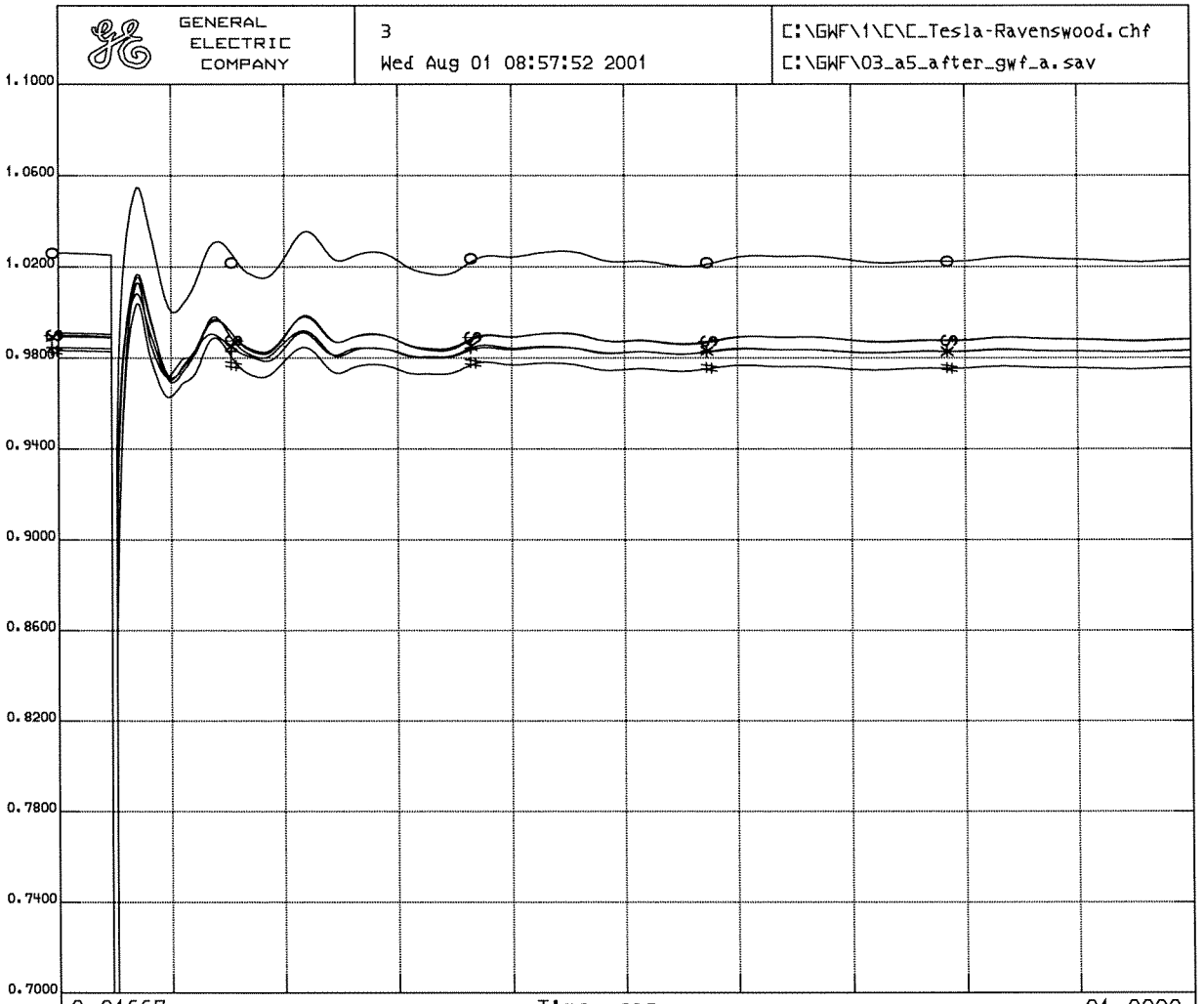

0.7000	o	vbus	30040 TESLA	500.00	1	1.1000
0.7000	+	vbul	30505 WEBER	230.00	1	1.1000
0.7000	*	vbus	30624 TESLA E	230.00	1	1.1000
0.7000	#	vbus	30630 NEWARK D	230.00	1	1.1000
0.7000	×	vbus	30703 RAVENSWD	230.00	1	1.1000
0.7000	$	vbus	37585 TRCY PMP	230.00	1	1.1000

GWF 258 MW Tracy Power Plant Project
2003 Summer Peak Base Case, Stability Study
GWF CT 1&2 @ 85.9 MW and ST @ 86.6 MW
3 phase 6 cycle fault at the Tesla 230 kV bus followed
by loss of the Tesla - Ravenswood 230 kV line.

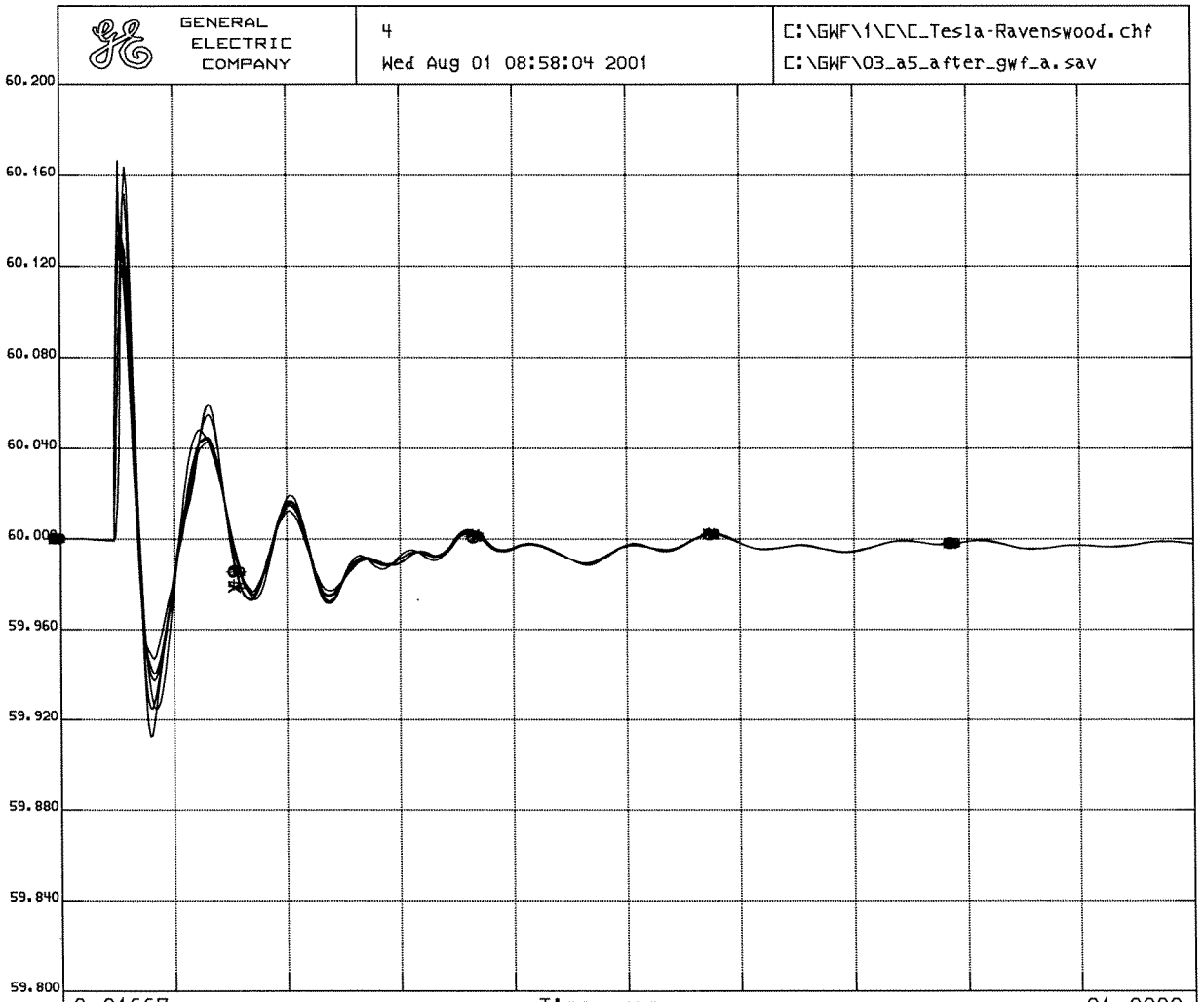

59.800	o	fbus	30040 TESLA	500.00	1	60.200
59.800	+	fbul	30505 WEBER	230.00	1	60.200
59.800	*	fbus	30624 TESLA E	230.00	1	60.200
59.800	#	fbus	30630 NEWARK D	230.00	1	60.200
59.800	×	fbus	30703 RAVENSWD	230.00	1	60.200
59.800	⊗	fbus	37585 TRCY PMP	230.00	1	60.200

GWF 258 MW Tracy Power Plant Project
2003 Summer Peak Base Case, Stability Study
GWF CT 1&2 @ 85.9 MW and ST @ 86.6 MW
3 phase 6 cycle fault at the Tesla 230 kV bus followed
by loss of the Tesla - Ravenswood 230 kV line.

Category B, f) A three-phase fault with a normal 6-cycle clearing time at the Tesla 230 kV bus, followed by loss of the Weber-Tesla 230 kV line.

PLOT 1 : Project Generator Terminal Voltages and Angles
PLOT 2 : Project Generator Power and Speed
PLOT 3 : Selected Bus Voltages Adjacent to Fault
PLOT 4 : Selected Bus Frequencies Adjacent to Fault

GENERAL ELECTRIC COMPANY

1

Wed Aug 01 09:00:10 2001

C:\GWF\1\F\F_Tesla-Weber.chf

C:\GWF\03_a5_after_gwf_a.sav

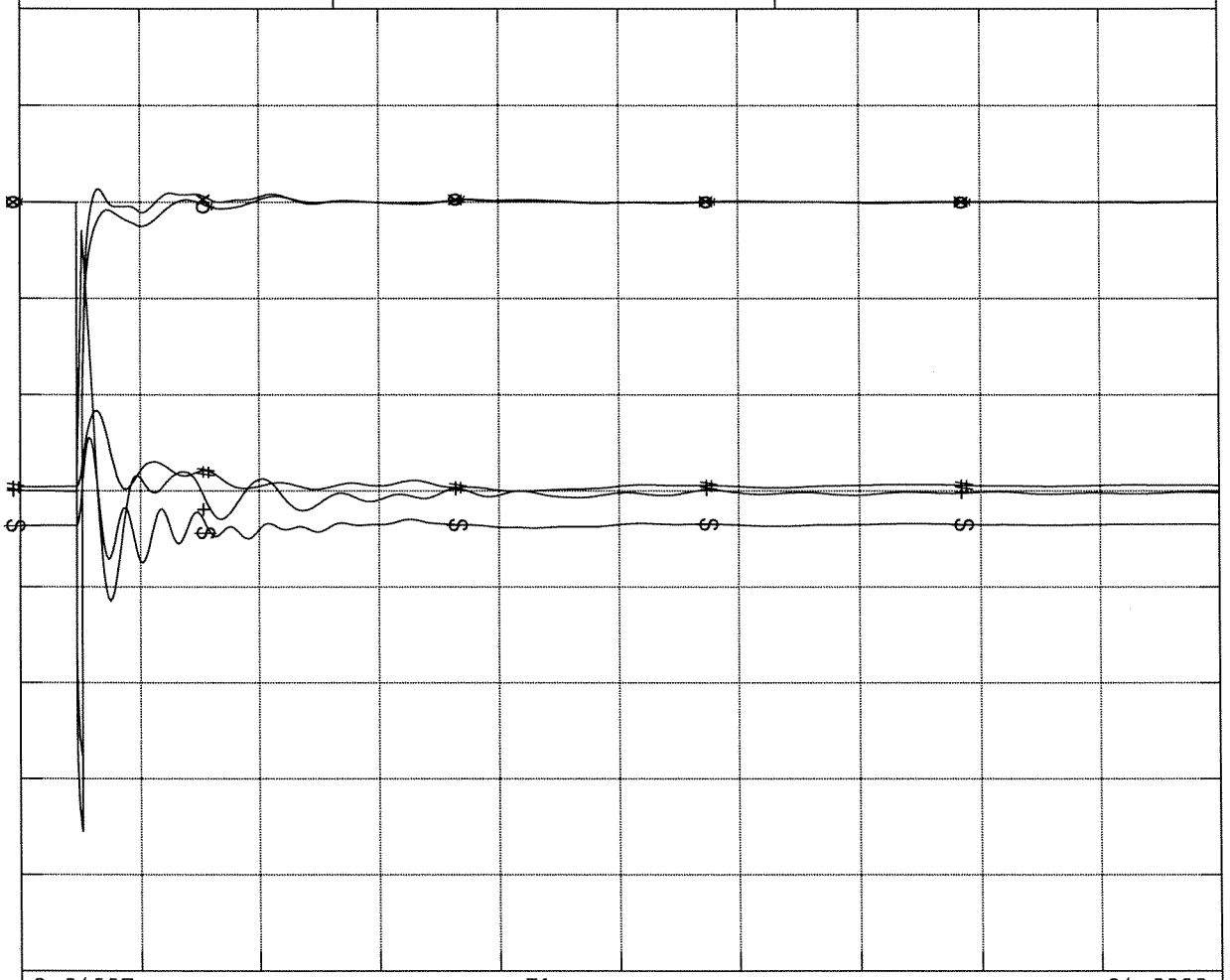

0.01667 Time, sec. 21.0000

0.2000	o	vt	33805	GWFTRCY1	13.80	1	1.2000
0.9900	+	spd	33805	GWFTRCY1	13.80	1	1.0100
0.2000	*	vt	33807	GWFTRCY2	13.80	1	1.2000
-100.0	#	ang	33807	GWFTRCY2	13.80	1	100.00
0.2000	x	vt	33809	GWFTRCY3	13.80	1	1.2000
-100.0	∽	ang	33809	GWFTRCY3	13.80	1	100.00

GWF 258 MW Tracy Power Plant Project
2003 Summer Peak Base Case, Stability Study
GWF CT 1&2 @ 85.9 MW and ST @ 86.6 MW
3 phase 6 cycle fault at the Tesla 230 kV bus followed
by loss of the Tesla - Weber 230 kV line.

GENERAL ELECTRIC COMPANY

2

Wed Aug 01 09:00:20 2001

C:\GWF\1\F\F_Tesla-Weber.chf

C:\GWF\03_a5_after_gwf_a.sav

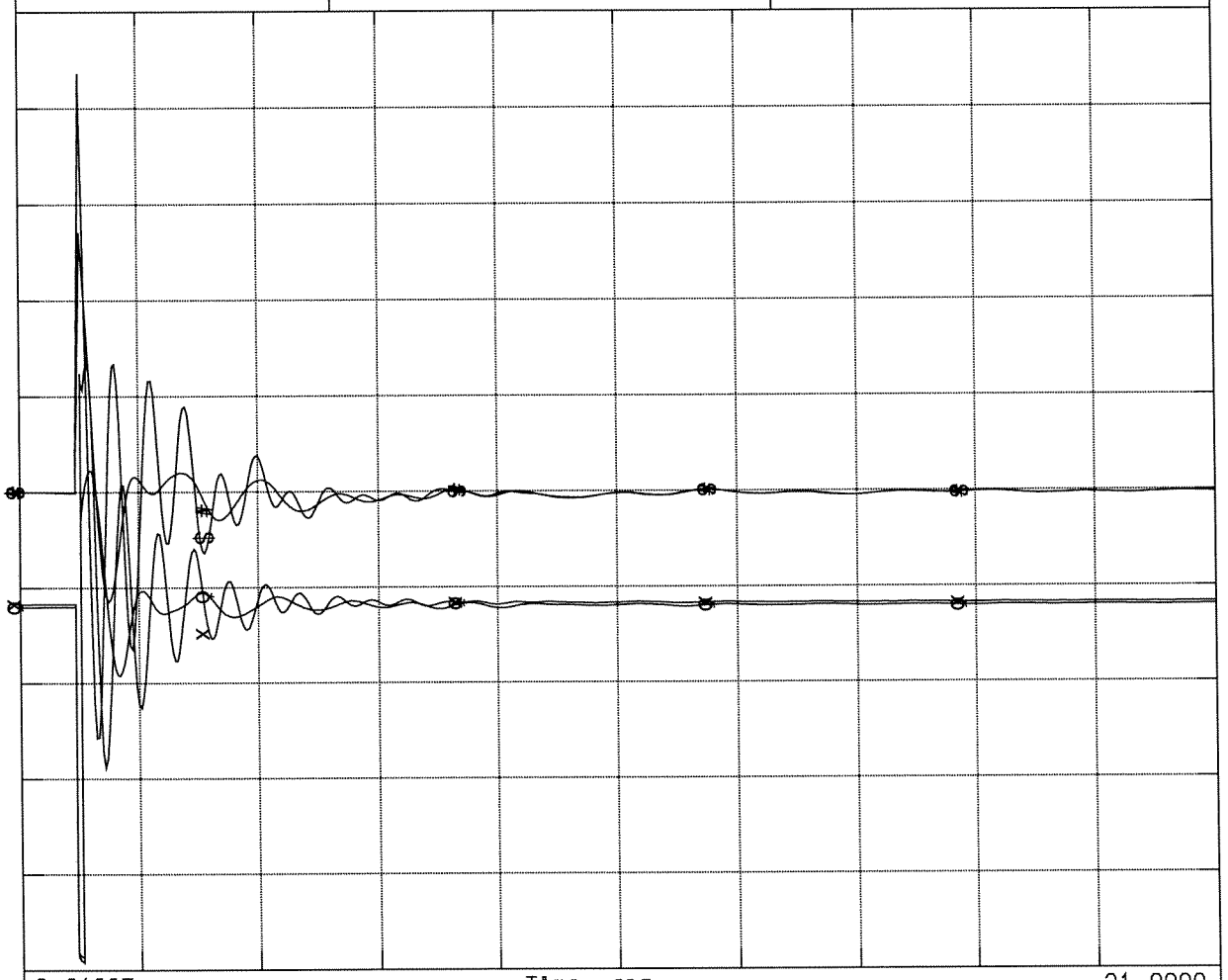

0.01667 Time, sec. 21.0000

0.0000	o	pg	33805	GWFTRCY1	13.80	1	226.20
0.9900	+	spd	33805	GWFTRCY1	13.80	1	1.0100
0.0000	*	pg	33807	GWFTRCY2	13.80	1	226.20
0.9900	#	spd	33807	GWFTRCY2	13.80	1	1.0100
0.0000	x	pg	33809	GWFTRCY3	13.80	1	226.20
0.9900	$	spd	33809	GWFTRCY3	13.80	1	1.0100

GWF 258 MW Tracy Power Plant Project
2003 Summer Peak Base Case, Stability Study
GWF CT 1&2 @ 85.9 MW and ST @ 86.6 MW
3 phase 6 cycle fault at the Tesla 230 kV bus followed
by loss of the Tesla - Weber 230 kV line.

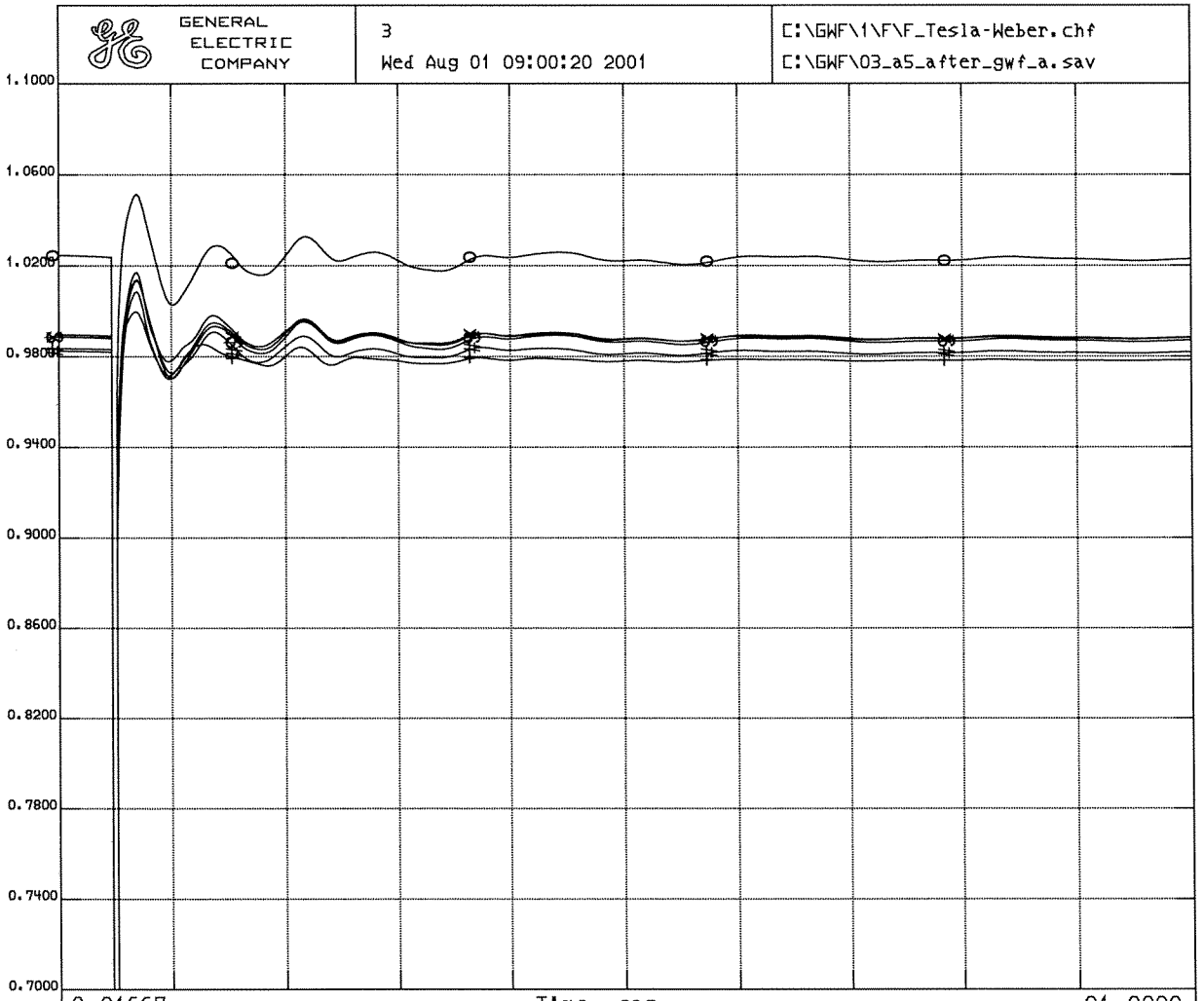

0.7000	o	vbus	30040	TESLA	500.00	1	1.1000
0.7000	+	vbul	30505	WEBER	230.00	1	1.1000
0.7000	*	vbus	30624	TESLA E	230.00	1	1.1000
0.7000	#	vbus	30630	NEWARK D	230.00	1	1.1000
0.7000	×	vbus	30703	RAVENSWD	230.00	1	1.1000
0.7000	⊗	vbus	37585	TRCY PMP	230.00	1	1.1000

GWF 258 MW Tracy Power Plant Project
2003 Summer Peak Base Case, Stability Study
GWF CT 1&2 @ 85.9 MW and ST @ 86.6 MW
3 phase 6 cycle fault at the Tesla 230 kV bus followed
by loss of the Tesla - Weber 230 kV line.

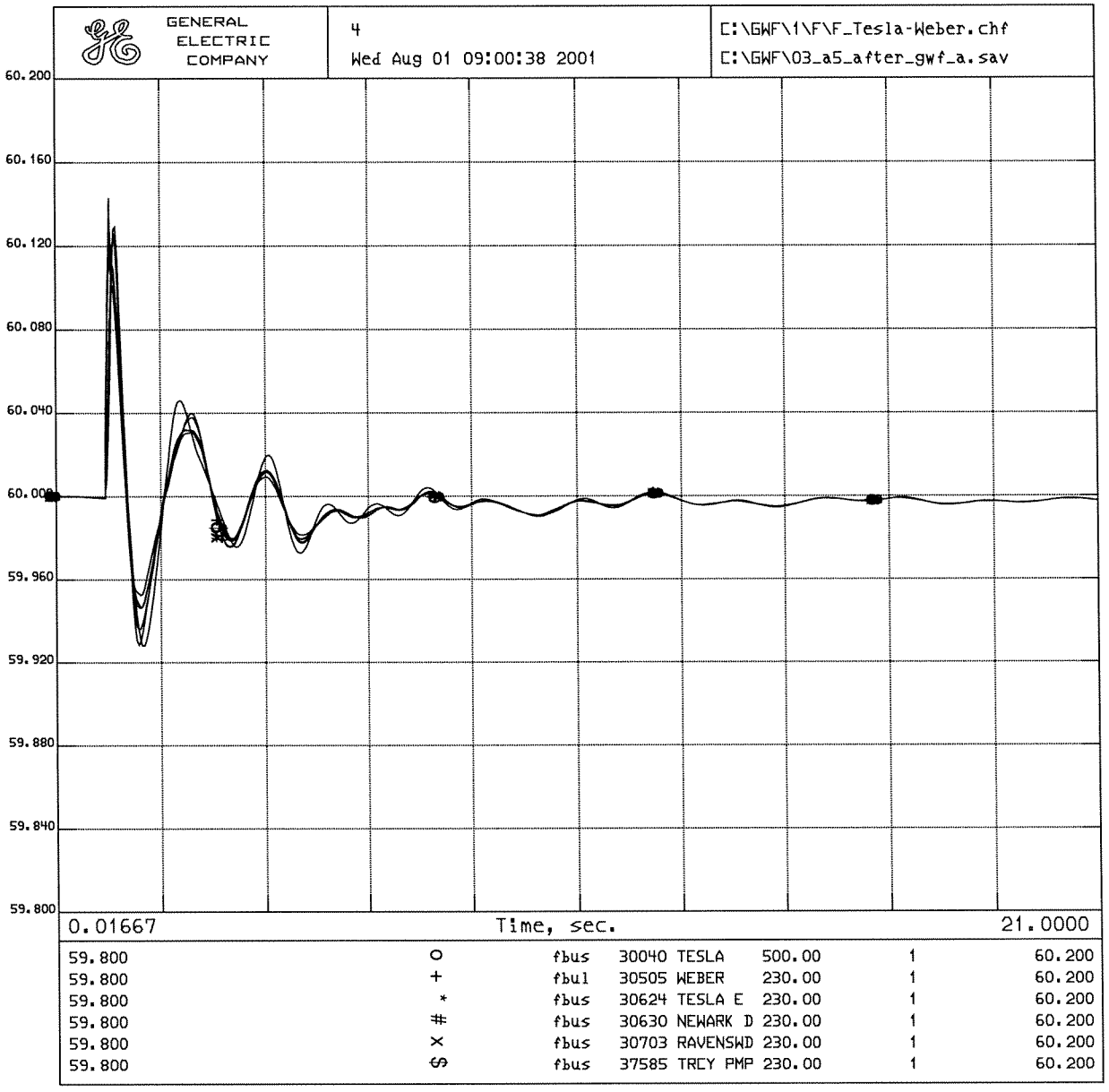

GWF 258 MW Tracy Power Plant Project
2003 Summer Peak Base Case, Stability Study
GWF CT 1&2 @ 85.9 MW and ST @ 86.6 MW
3 phase 6 cycle fault at the Tesla 230 kV bus followed
by loss of the Tesla - Weber 230 kV line.

Category B, h) A three-phase fault with a normal 6-cycle clearing time at the Tesla 230 kV bus, followed by loss of the Tesla-Newark 230 kV line.

PLOT 1 : Project Generator Terminal Voltages and Angles
PLOT 2 : Project Generator Power and Speed
PLOT 3 : Selected Bus Voltages Adjacent to Fault
PLOT 4 : Selected Bus Frequencies Adjacent to Fault

GENERAL ELECTRIC COMPANY

1

Wed Aug 01 09:02:35 2001

C:\GWF\1\H\H_Tesla-Newark.chf

C:\GWF\03_a5_after_gwf_a.sav

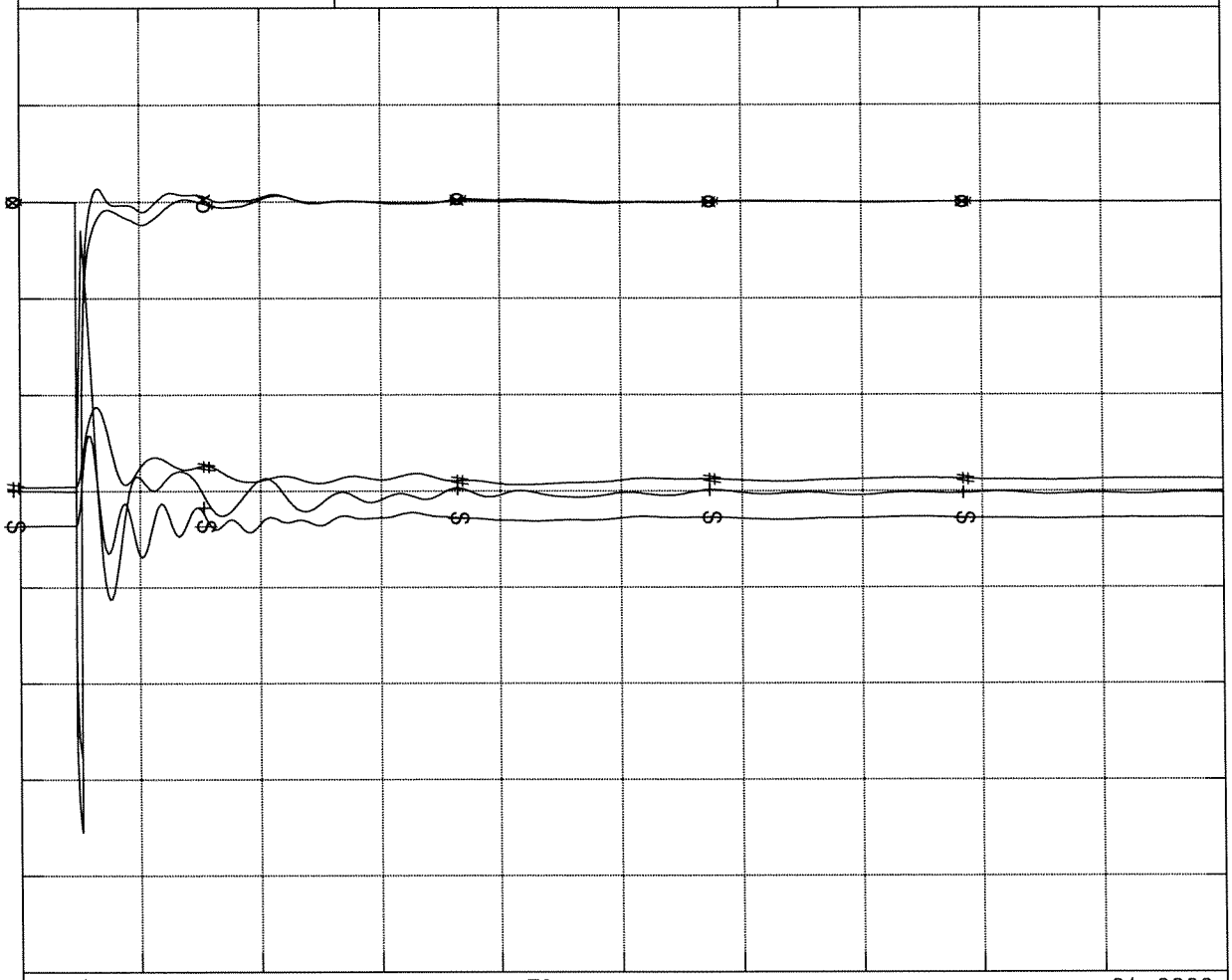

0.01667 Time, sec. 21.0000

0.2000	o	vt	33805	GWFTRCY1	13.80	1	1.2000
0.9900	+	spd	33805	GWFTRCY1	13.80	1	1.0100
0.2000	*	vt	33807	GWFTRCY2	13.80	1	1.2000
-100.0	#	ang	33807	GWFTRCY2	13.80	1	100.00
0.2000	x	vt	33809	GWFTRCY3	13.80	1	1.2000
-100.0	$	ang	33809	GWFTRCY3	13.80	1	100.00

GWF 258 MW Tracy Power Plant Project
2003 Summer Peak Base Case, Stability Study
GWF CT 1&2 @ 85.9 MW and ST @ 86.6 MW
3 phase 6 cycle fault at the Tesla 230 kV bus followed
by loss of the Tesla - Newark 230 kV line.

GENERAL ELECTRIC COMPANY	2 Wed Aug 01 09:02:44 2001	C:\GWF\1\H\H_Tesla-Newark.chf C:\GWF\03_a5_after_gwf_a.sav

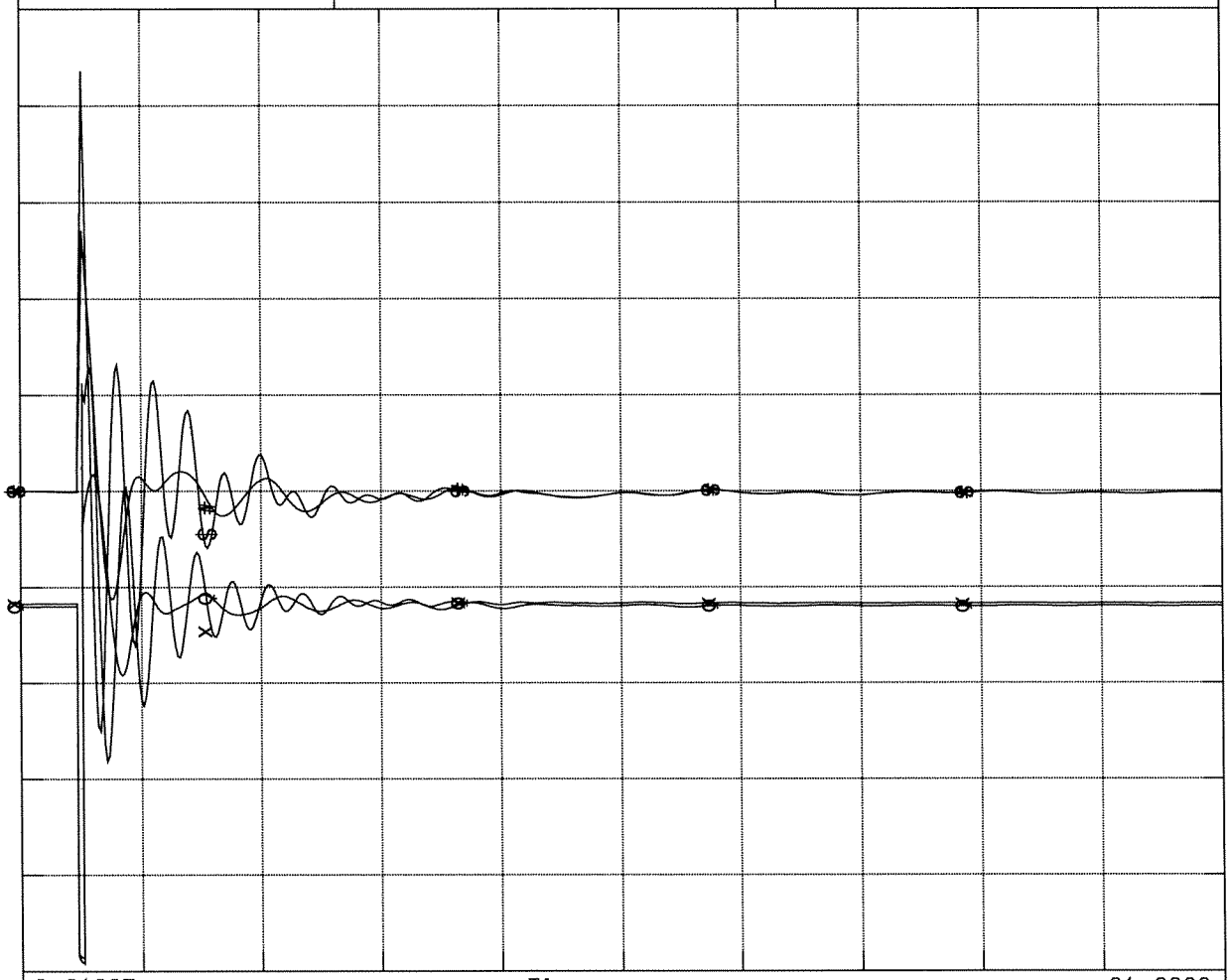

0.01667 Time, sec. 21.0000

0.0000	o	pg	33805	GWFTRCY1	13.80	1	226.20
0.9900	+	spd	33805	GWFTRCY1	13.80	1	1.0100
0.0000	*	pg	33807	GWFTRCY2	13.80	1	226.20
0.9900	#	spd	33807	GWFTRCY2	13.80	1	1.0100
0.0000	x	pg	33809	GWFTRCY3	13.80	1	226.20
0.9900	$	spd	33809	GWFTRCY3	13.80	1	1.0100

GWF 258 MW Tracy Power Plant Project
2003 Summer Peak Base Case, Stability Study
GWF CT 1&2 @ 85.9 MW and ST @ 86.6 MW
3 phase 6 cycle fault at the Tesla 230 kV bus followed
by loss of the Tesla - Newark 230 kV line.

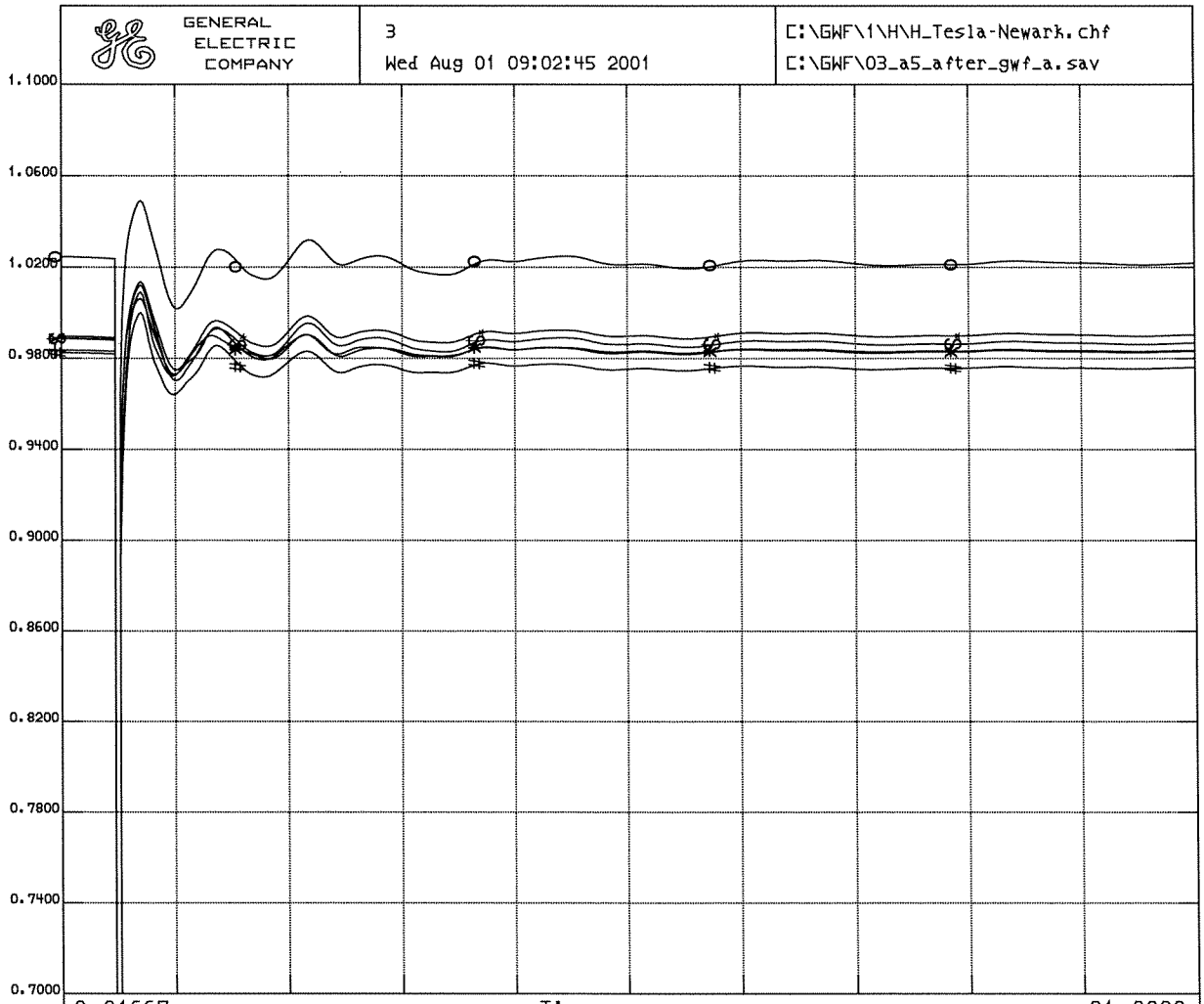

0.7000	o	vbus	30040	TESLA	500.00	1	1.1000
0.7000	+	vbul	30505	WEBER	230.00	1	1.1000
0.7000	*	vbus	30624	TESLA E	230.00	1	1.1000
0.7000	#	vbus	30630	NEWARK D	230.00	1	1.1000
0.7000	×	vbus	30703	RAVENSWD	230.00	1	1.1000
0.7000	$	vbus	37585	TRCY PMP	230.00	1	1.1000

GWF 258 MW Tracy Power Plant Project
2003 Summer Peak Base Case, Stability Study
GWF CT 1&2 @ 85.9 MW and ST @ 86.6 MW
3 phase 6 cycle fault at the Tesla 230 kV bus followed
by loss of the Tesla - Newark 230 kV line.

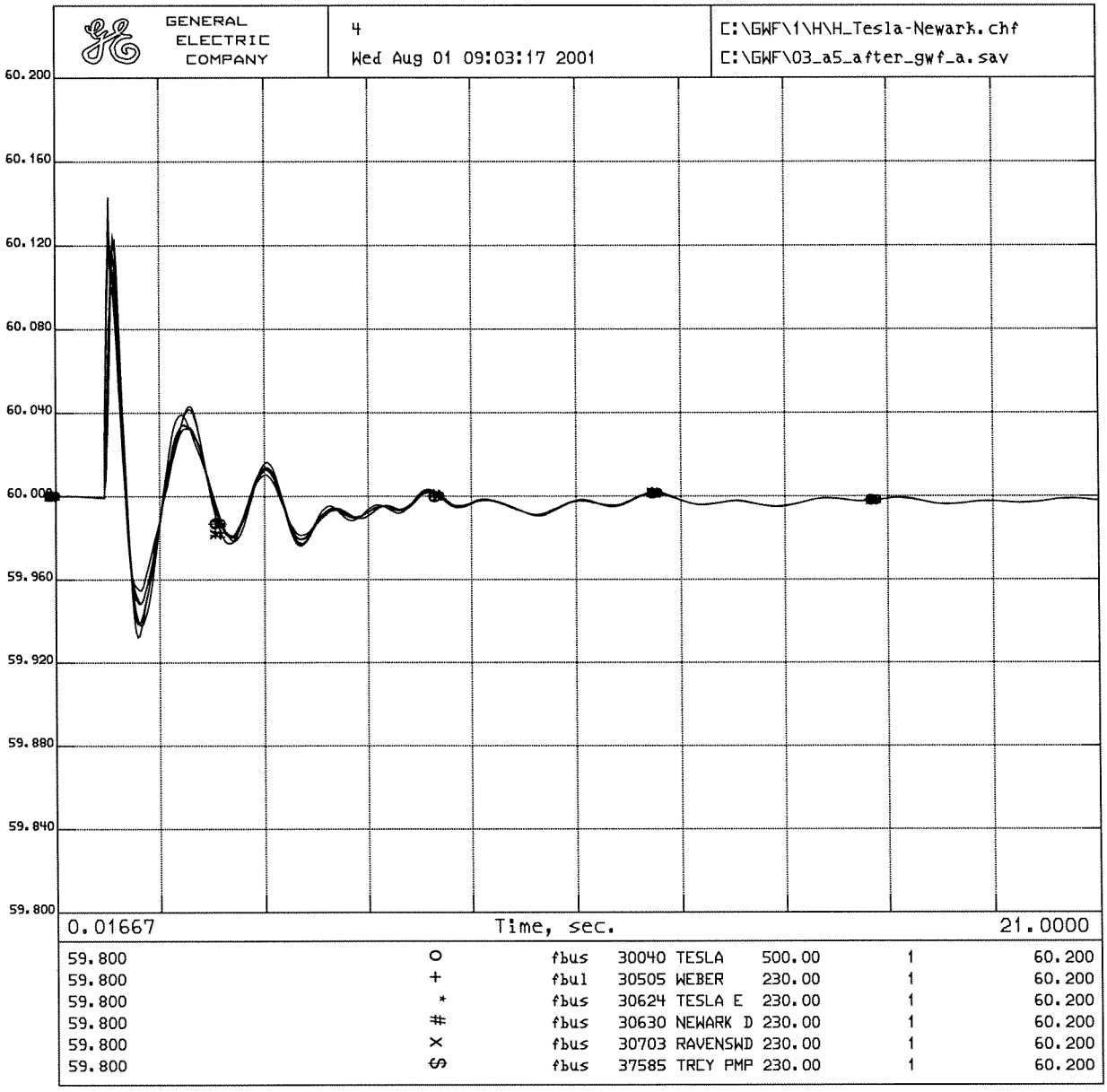

GWF 258 MW Tracy Power Plant Project
2003 Summer Peak Base Case, Stability Study
GWF CT 1&2 @ 85.9 MW and ST @ 86.6 MW
3 phase 6 cycle fault at the Tesla 230 kV bus followed
by loss of the Tesla - Newark 230 kV line.

Category B, j) A three-phase fault with a normal 6-cycle clearing time at the Tesla 500 kV bus, followed by loss of the Tesla 500/230 kV Bank #2.

PLOT 1 : Project Generator Terminal Voltages and Angles
PLOT 2 : Project Generator Power and Speed
PLOT 3 : Selected Bus Voltages Adjacent to Fault
PLOT 4 : Selected Bus Frequencies Adjacent to Fault

GENERAL ELECTRIC COMPANY

1

Wed Aug 01 09:05:04 2001

C:\GWF\1\J\J_Tesla500-230#2.chf

C:\GWF\03_a5_after_gwf_a.sav

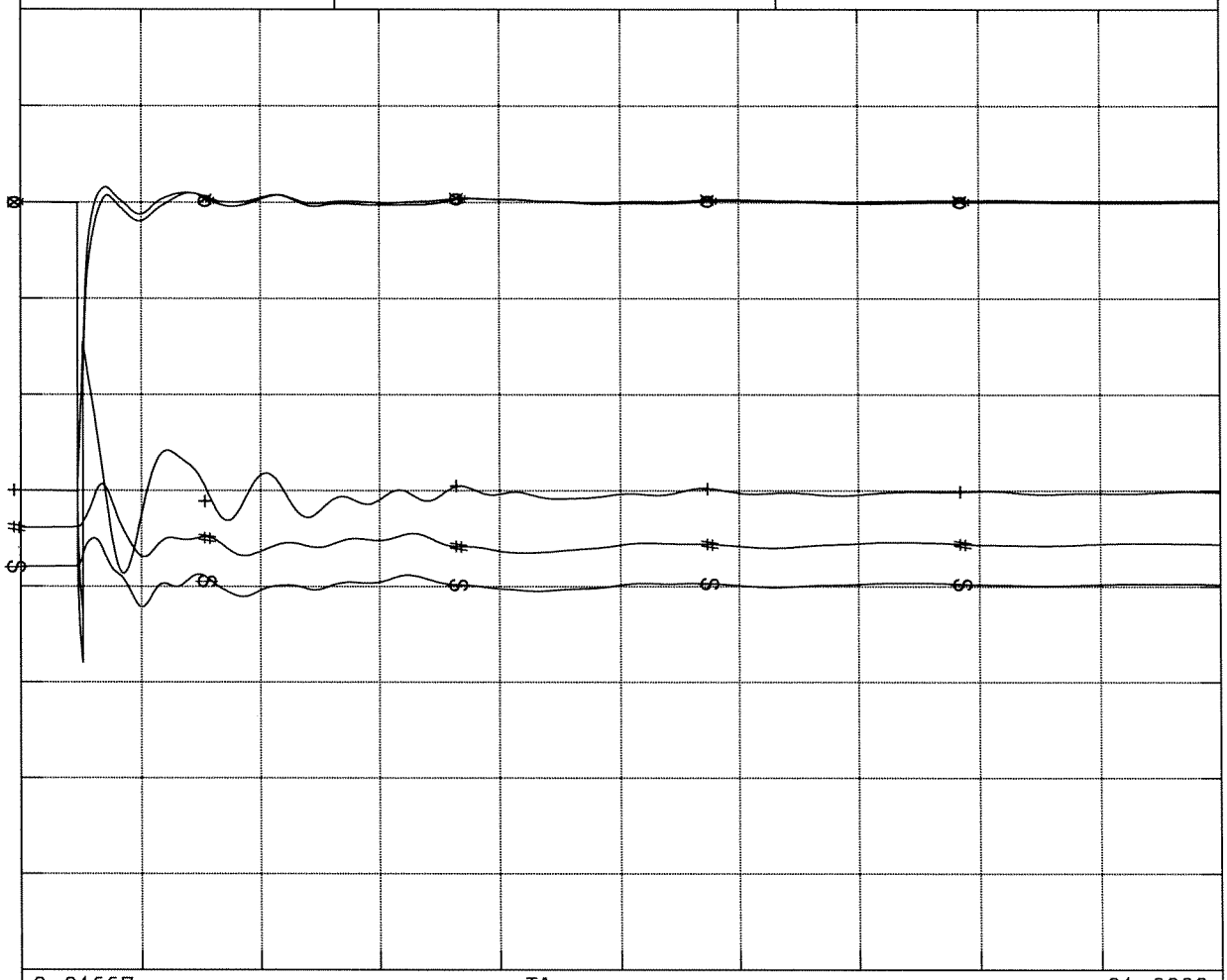

0.01667 Time, sec. 21.0000

0.2000	o	vt	33805	GWFTRCY1	13.80	1	1.2000
0.9900	+	spd	33805	GWFTRCY1	13.80	1	1.0100
0.2000	*	vt	33807	GWFTRCY2	13.80	1	1.2000
-100.0	#	ang	33807	GWFTRCY2	13.80	1	100.00
0.2000	x	vt	33809	GWFTRCY3	13.80	1	1.2000
-100.0	$	ang	33809	GWFTRCY3	13.80	1	100.00

GWF 258 MW Tracy Power Plant Project
2003 Summer Peak Base Case, Stability Study
GWF CT 1&2 @ 85.9 MW and ST @ 86.6 MW
3 phase 6 cycle fault at the Tesla 500 kV bus followed
by loss of the Tesla 500/230 kV Transformer Bank #2

GENERAL ELECTRIC COMPANY	2 Wed Aug 01 09:05:11 2001	C:\GWF\1\J\J_Tesla500-230#2.chf C:\GWF\03_a5_after_gwf_a.sav

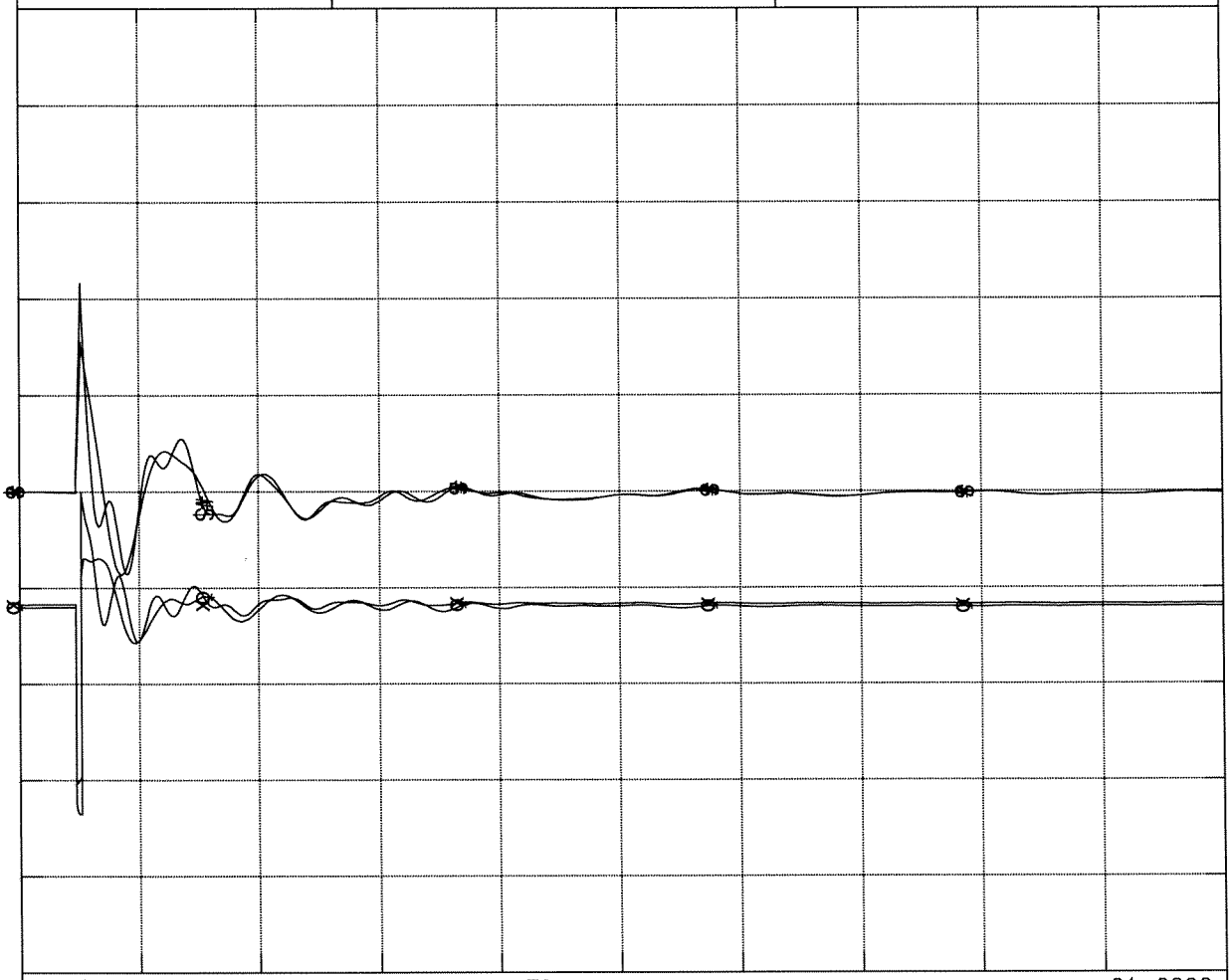

0.01667 Time, sec. 21.0000

0.0000	o	pg	33805	GWFTRCY1	13.80	1	226.20
0.9900	+	spd	33805	GWFTRCY1	13.80	1	1.0100
0.0000	*	pg	33807	GWFTRCY2	13.80	1	226.20
0.9900	#	spd	33807	GWFTRCY2	13.80	1	1.0100
0.0000	x	pg	33809	GWFTRCY3	13.80	1	226.20
0.9900	⊗	spd	33809	GWFTRCY3	13.80	1	1.0100

GWF 258 MW Tracy Power Plant Project
2003 Summer Peak Base Case, Stability Study
GWF CT 1&2 @ 85.9 MW and ST @ 86.6 MW
3 phase 6 cycle fault at the Tesla 500 kV bus followed
by loss of the Tesla 500/230 kV Transformer Bank #2

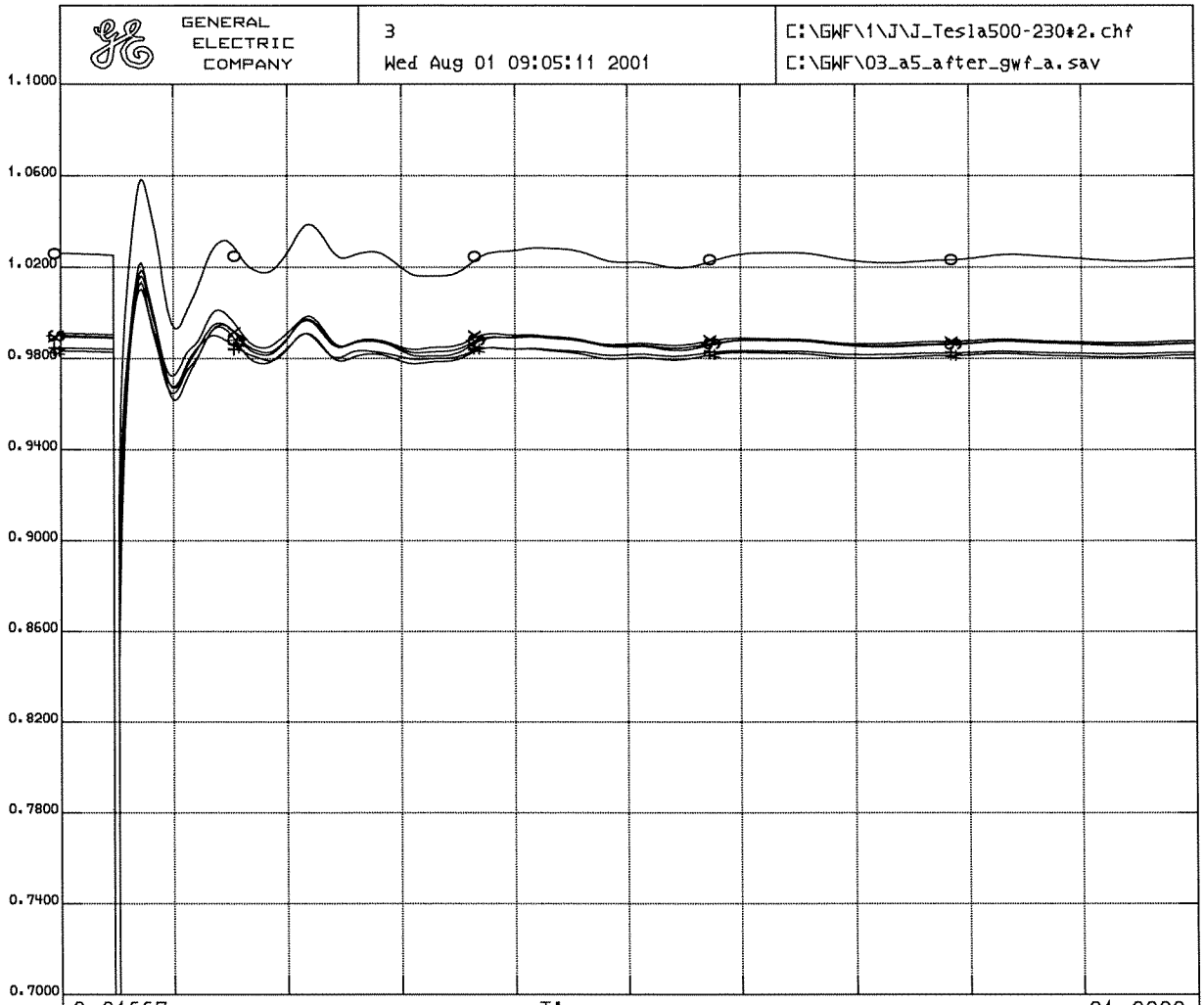

0.7000	o	vbus	30040	TESLA	500.00	1	1.1000
0.7000	+	vbul	30505	WEBER	230.00	1	1.1000
0.7000	*	vbus	30624	TESLA E	230.00	1	1.1000
0.7000	#	vbus	30630	NEWARK D	230.00	1	1.1000
0.7000	×	vbus	30703	RAVENSWD	230.00	1	1.1000
0.7000	⊗	vbus	37585	TRCY PMP	230.00	1	1.1000

GWF 258 MW Tracy Power Plant Project
2003 Summer Peak Base Case, Stability Study
GWF CT 1&2 @ 85.9 MW and ST @ 86.6 MW
3 phase 6 cycle fault at the Tesla 500 kV bus followed
by loss of the Tesla 500/230 kV Transformer Bank #2

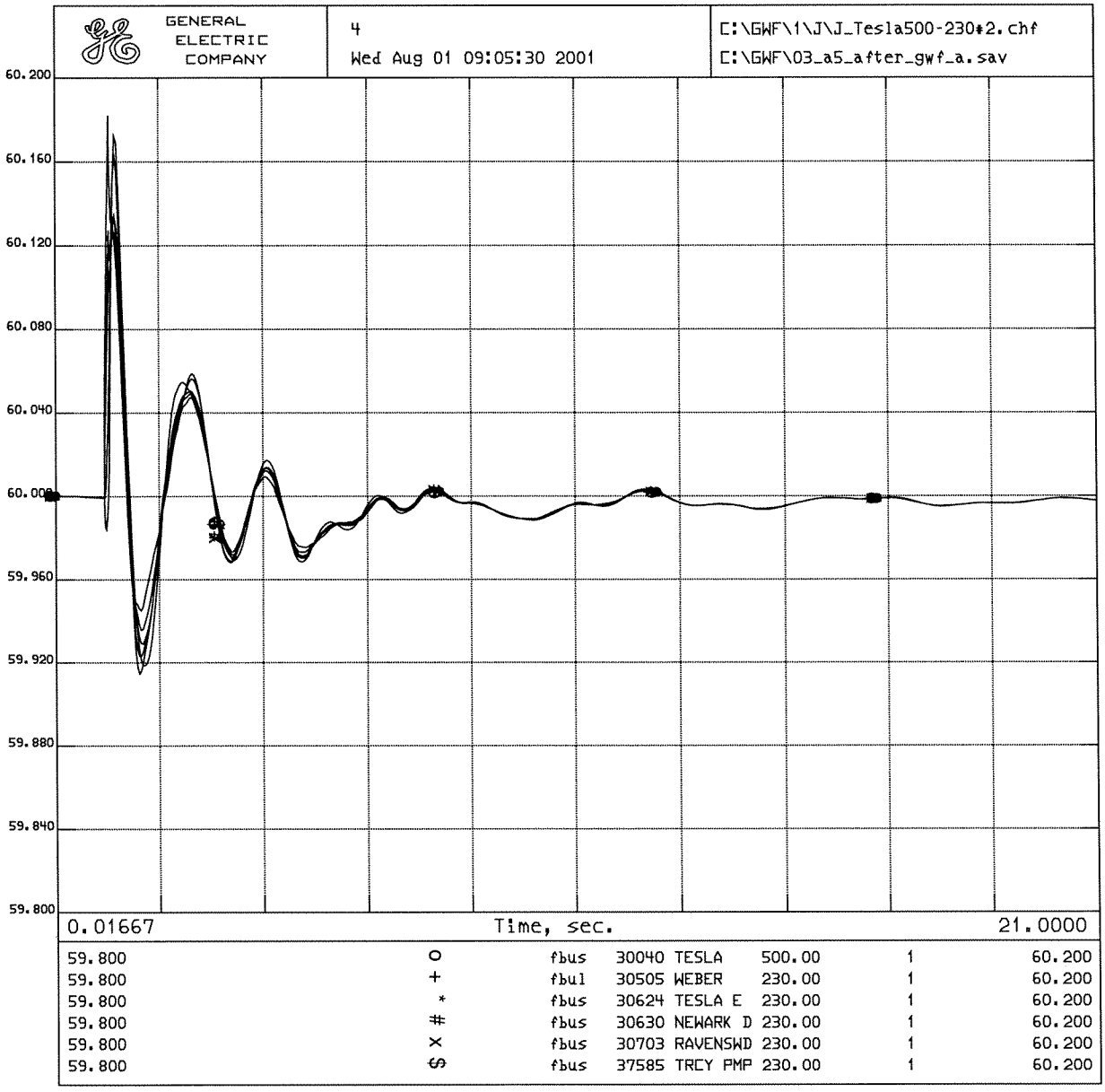

GWF 258 MW Tracy Power Plant Project
2003 Summer Peak Base Case, Stability Study
GWF CT 1&2 @ 85.9 MW and ST @ 86.6 MW
3 phase 6 cycle fault at the Tesla 500 kV bus followed
by loss of the Tesla 500/230 kV Transformer Bank #2

Category B, k) A three-phase fault with a normal 4-cycle clearing time at the Tesla 500 kV bus, followed by loss of the Table Mountain-Tesla 500 kV line.

PLOT 1 : Project Generator Terminal Voltages and Angles
PLOT 2 : Project Generator Power and Speed
PLOT 3 : Selected Bus Voltages Adjacent to Fault
PLOT 4 : Selected Bus Frequencies Adjacent to Fault

GENERAL ELECTRIC COMPANY	1 Wed Aug 01 11:54:31 2001	C:\GWF\1\K\K_TbleMT-Tesla500.chf C:\GWF\03_a5_after_gwf_a.sav

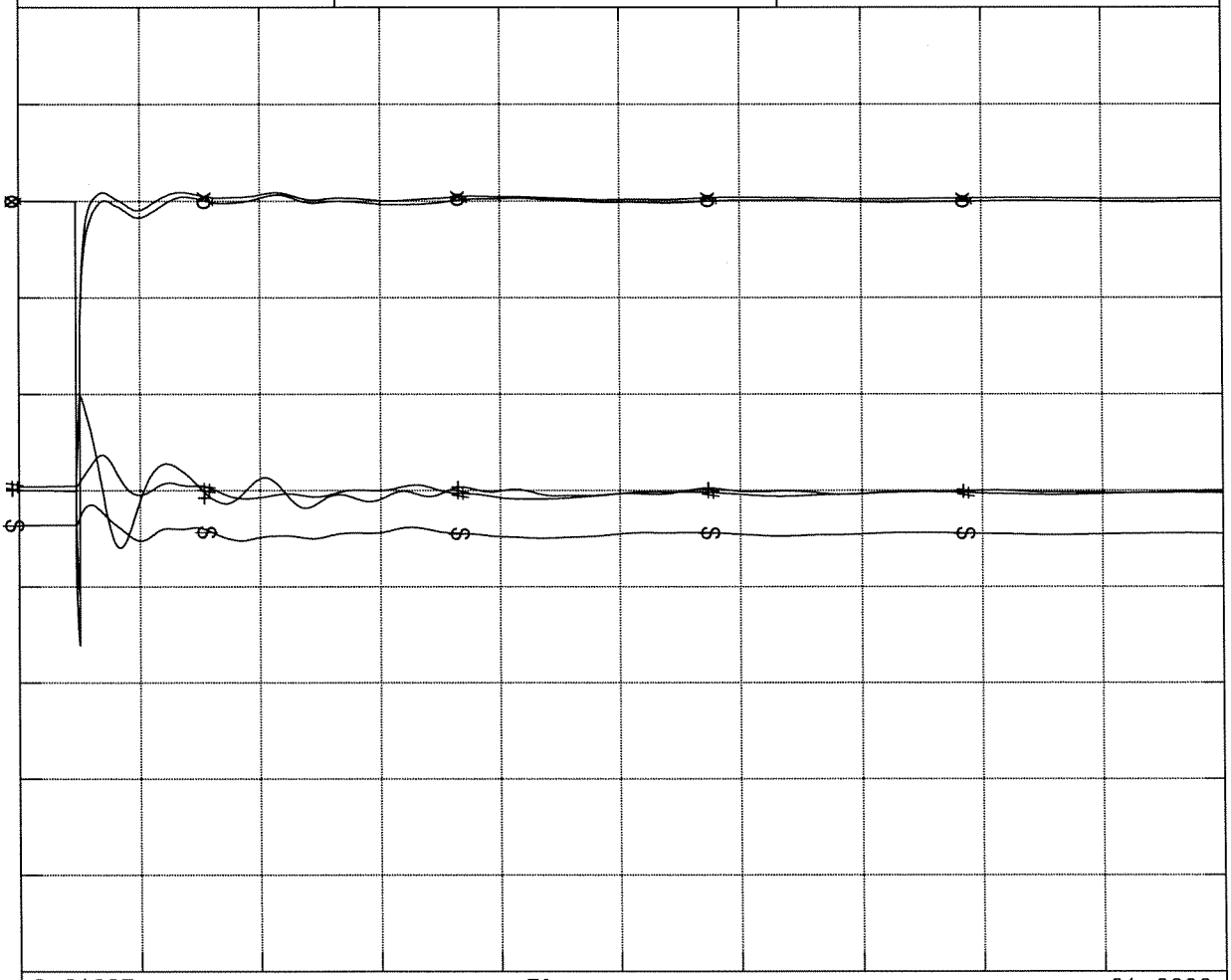

0.01667 Time, sec. 21.0000

0.2000	o	vt	33805	GWFTRCY1	13.80	1	1.2000
0.9900	+	spd	33805	GWFTRCY1	13.80	1	1.0100
0.2000	*	vt	33807	GWFTRCY2	13.80	1	1.2000
-100.0	#	ang	33807	GWFTRCY2	13.80	1	100.00
0.2000	x	vt	33809	GWFTRCY3	13.80	1	1.2000
-100.0	$	ang	33809	GWFTRCY3	13.80	1	100.00

GWF 258 MW Tracy Power Plant Project
2003 Summer Peak Base Case, Stability Study
GWF CT 1&2 @ 85.9 MW and ST @ 86.6 MW
3 phase 4 cycle fault at the Tesla 500 kV bus followed
by loss of the Tesla - Table Mountain 500 kV line

GENERAL ELECTRIC COMPANY	2 Wed Aug 01 11:54:34 2001	C:\GWF\1\K\K_TbleMT-Tesla500.chf C:\GWF\03_a5_after_gwf_a.sav

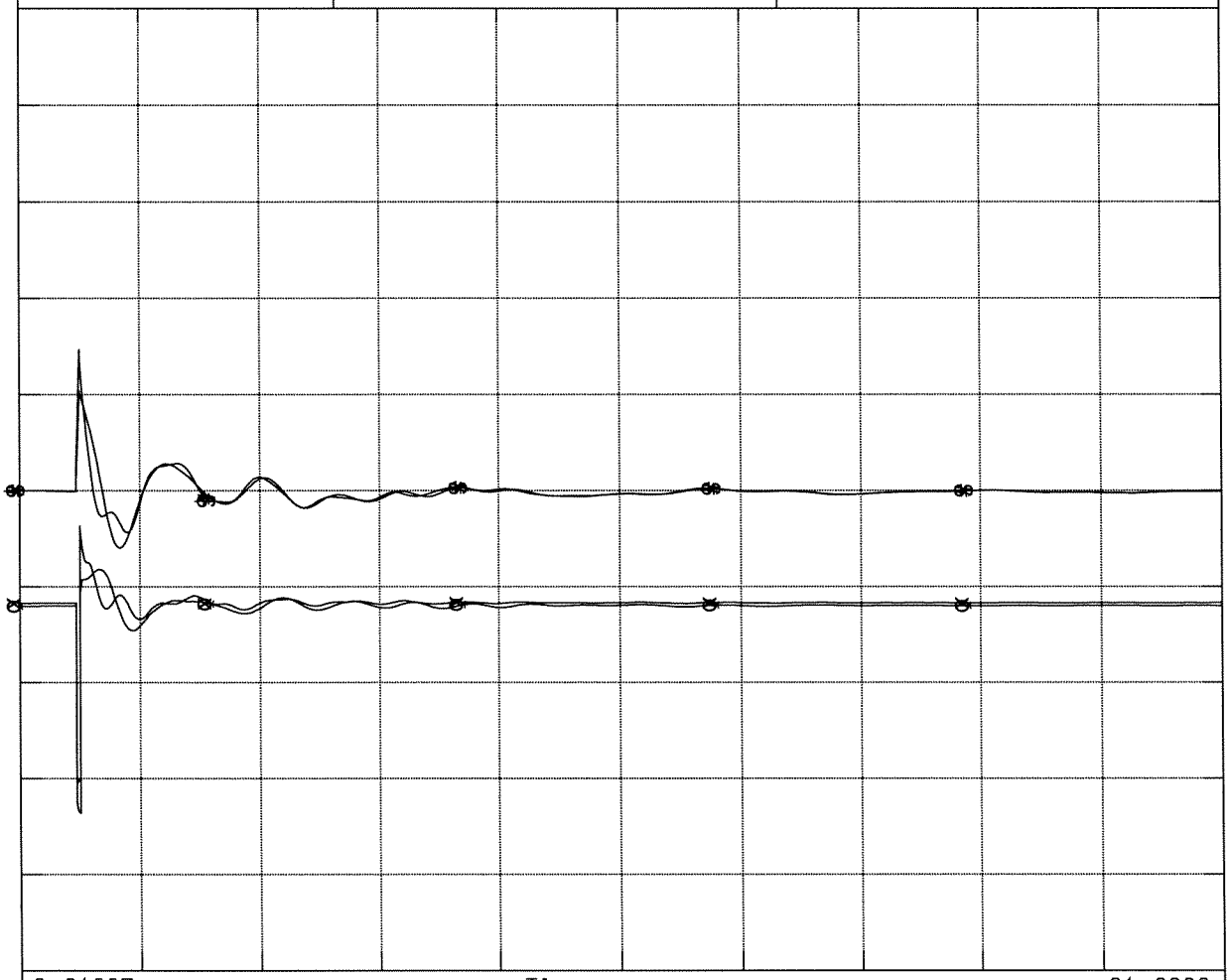

0.01667 Time, sec. 21.0000

0.0000	o	pg	33805	GWFTRCY1	13.80	1	226.20
0.9900	+	spd	33805	GWFTRCY1	13.80	1	1.0100
0.0000	*	pg	33807	GWFTRCY2	13.80	1	226.20
0.9900	#	spd	33807	GWFTRCY2	13.80	1	1.0100
0.0000	x	pg	33809	GWFTRCY3	13.80	1	226.20
0.9900	$	spd	33809	GWFTRCY3	13.80	1	1.0100

GWF 258 MW Tracy Power Plant Project
2003 Summer Peak Base Case, Stability Study
GWF CT 1&2 @ 85.9 MW and ST @ 86.6 MW
3 phase 4 cycle fault at the Tesla 500 kV bus followed
by loss of the Tesla - Table Mountain 500 kV line

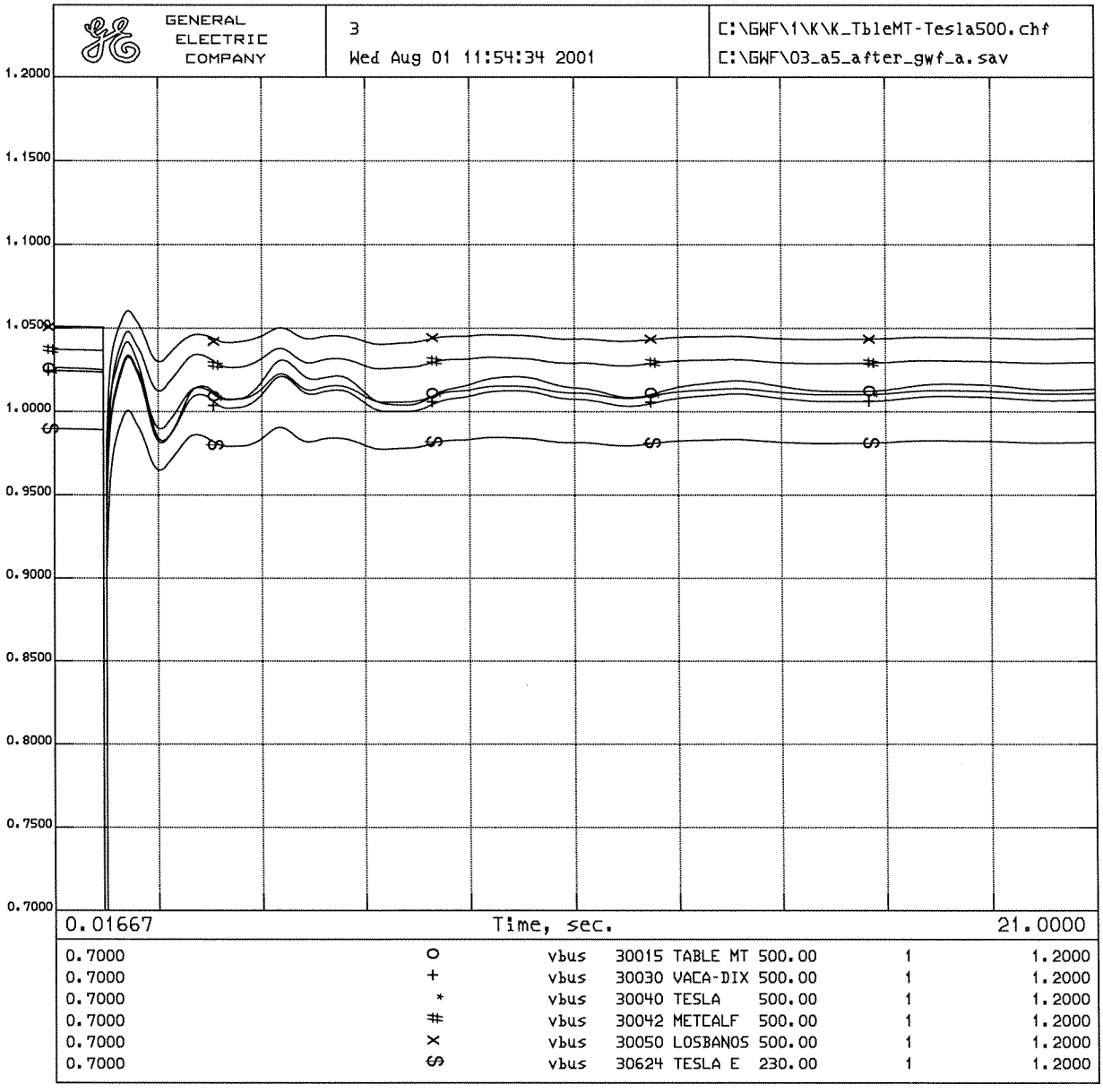

GWF 258 MW Tracy Power Plant Project
2003 Summer Peak Base Case, Stability Study
GWF CT 1&2 @ 85.9 MW and ST @ 86.6 MW
3 phase 4 cycle fault at the Tesla 500 kV bus followed
by loss of the Tesla - Table Mountain 500 kV line

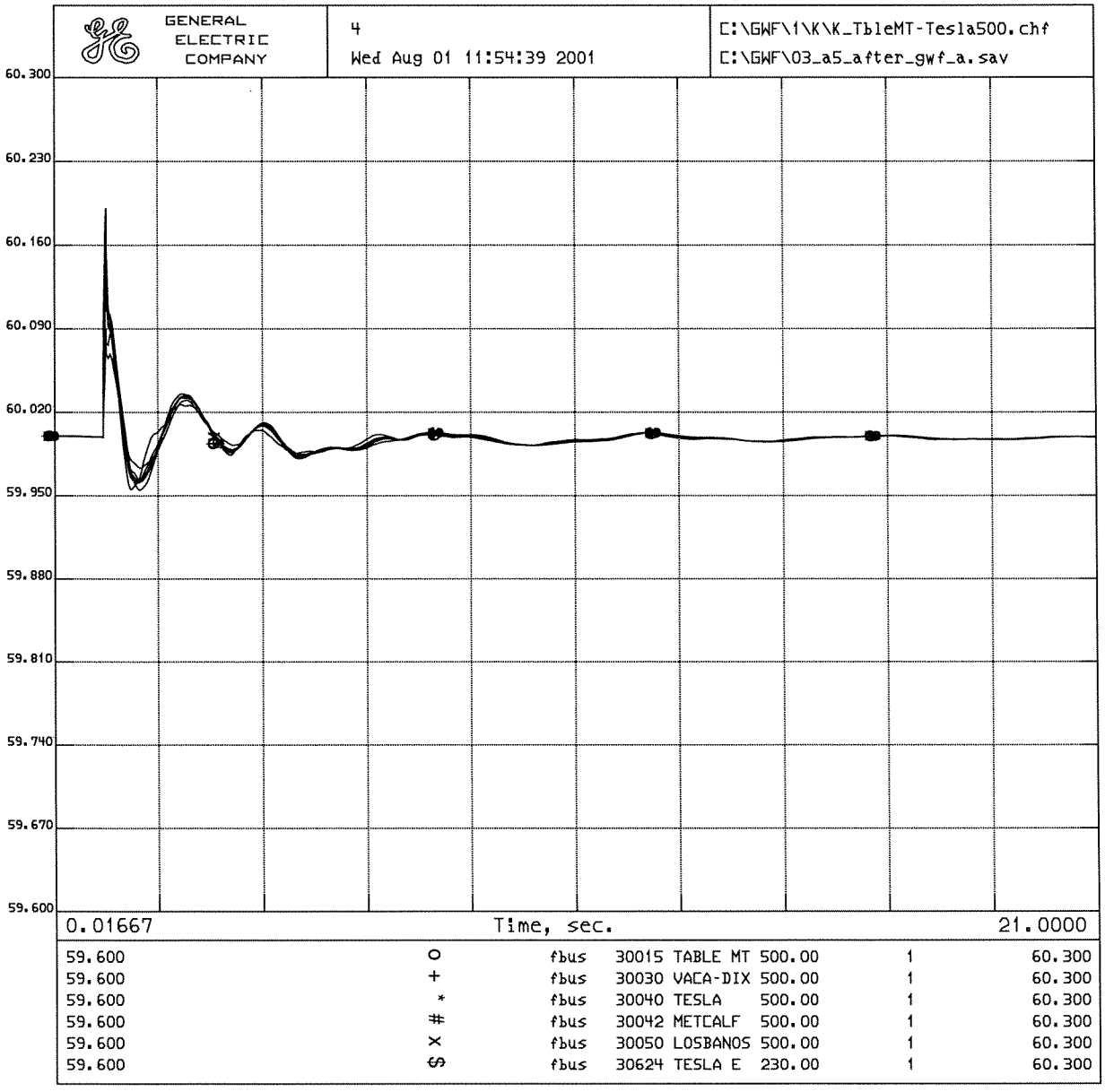

GWF 258 MW Tracy Power Plant Project
2003 Summer Peak Base Case, Stability Study
GWF CT 1&2 @ 85.9 MW and ST @ 86.6 MW
3 phase 4 cycle fault at the Tesla 500 kV bus followed
by loss of the Tesla - Table Mountain 500 kV line

Category B, l) A three-phase fault with a normal 4-cycle clearing time at the Tesla 500 kV bus, followed by loss of the Vaca-Tesla 500 kV line.

PLOT 1 : Project Generator Terminal Voltages and Angles
PLOT 2 : Project Generator Power and Speed
PLOT 3 : Selected Bus Voltages Adjacent to Fault
PLOT 4 : Selected Bus Frequencies Adjacent to Fault

GENERAL ELECTRIC COMPANY

1

Wed Aug 01 11:54:55 2001

C:\GWF\1\L\L_Vaca-Tesla500.chf

C:\GWF\03_a5_after_gwf_a.sav

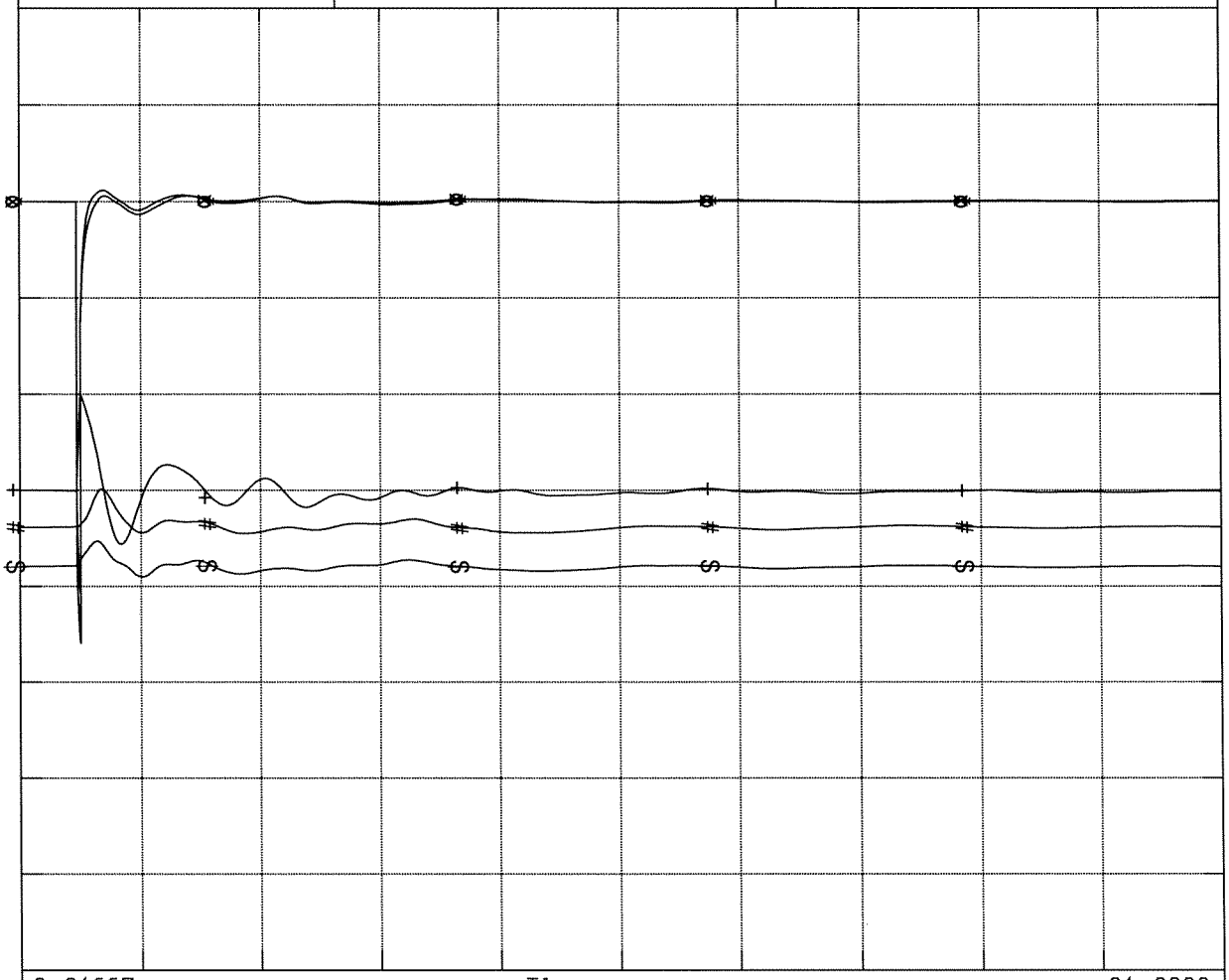

0.01667 Time, sec. 21.0000

0.2000	o	vt	33805	GWFTRCY1	13.80	1	1.2000
0.9900	+	spd	33805	GWFTRCY1	13.80	1	1.0100
0.2000	*	vt	33807	GWFTRCY2	13.80	1	1.2000
-100.0	#	ang	33807	GWFTRCY2	13.80	1	100.00
0.2000	x	vt	33809	GWFTRCY3	13.80	1	1.2000
-100.0	∽	ang	33809	GWFTRCY3	13.80	1	100.00

GWF 258 MW Tracy Power Plant Project
2003 Summer Peak Base Case, Stability Study
GWF CT 1&2 @ 85.9 MW and ST @ 86.6 MW
3 phase 4 cycle fault at the Tesla 500 kV bus followed
by loss of the Tesla - Vaca-Dixon 500 kV line

GENERAL ELECTRIC COMPANY

2

Wed Aug 01 11:54:58 2001

C:\GWF\1\L\L_Vaca-Tesla500.chf

C:\GWF\03_a5_after_gwf_a.sav

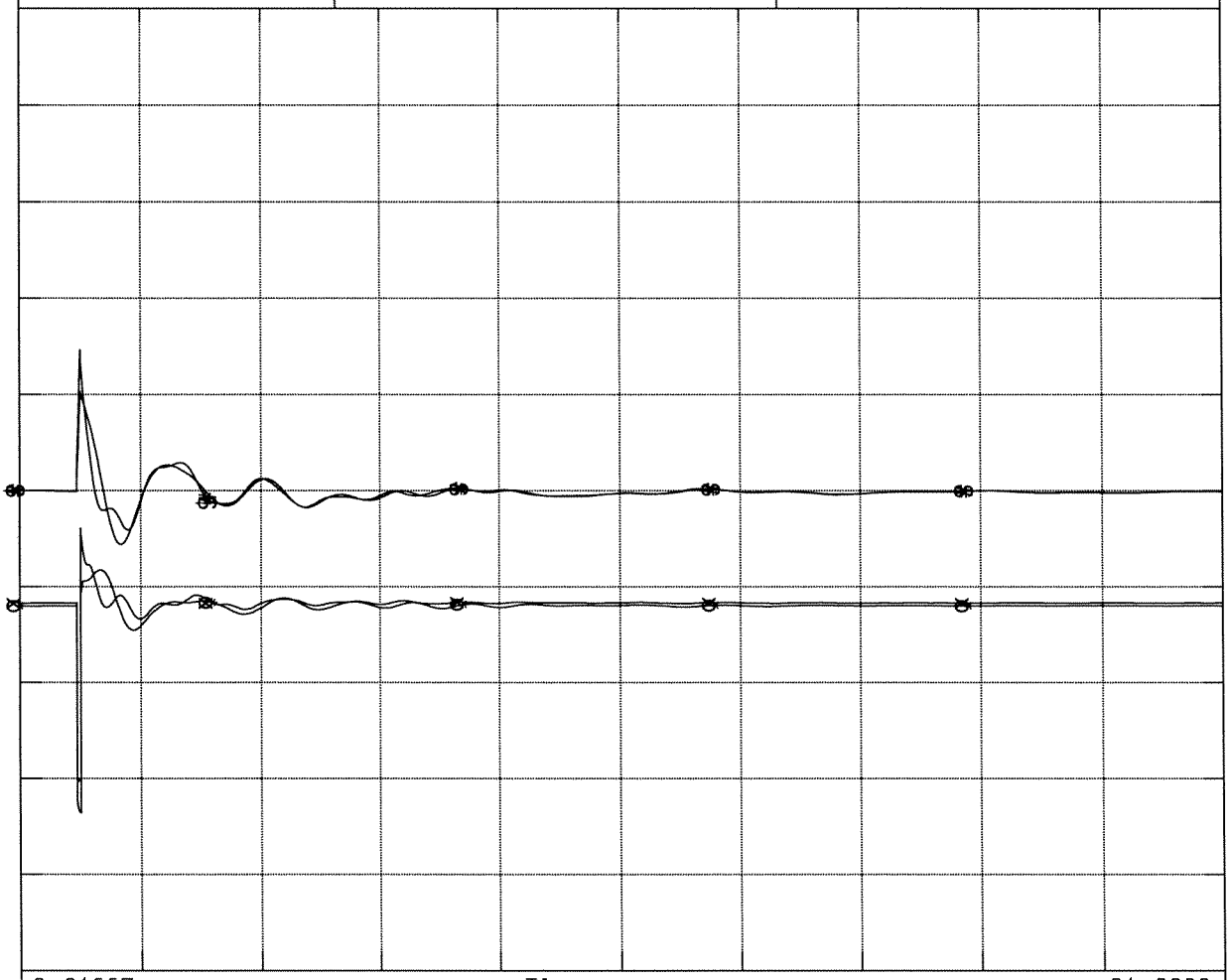

0.01667 Time, sec. 21.0000

0.0000	o	pg	33805	GWFTRCY1	13.80	1	226.20
0.9900	+	spd	33805	GWFTRCY1	13.80	1	1.0100
0.0000	*	pg	33807	GWFTRCY2	13.80	1	226.20
0.9900	#	spd	33807	GWFTRCY2	13.80	1	1.0100
0.0000	x	pg	33809	GWFTRCY3	13.80	1	226.20
0.9900	$	spd	33809	GWFTRCY3	13.80	1	1.0100

GWF 258 MW Tracy Power Plant Project
2003 Summer Peak Base Case, Stability Study
GWF CT 1&2 @ 85.9 MW and ST @ 86.6 MW
3 phase 4 cycle fault at the Tesla 500 kV bus followed
by loss of the Tesla - Vaca-Dixon 500 kV line

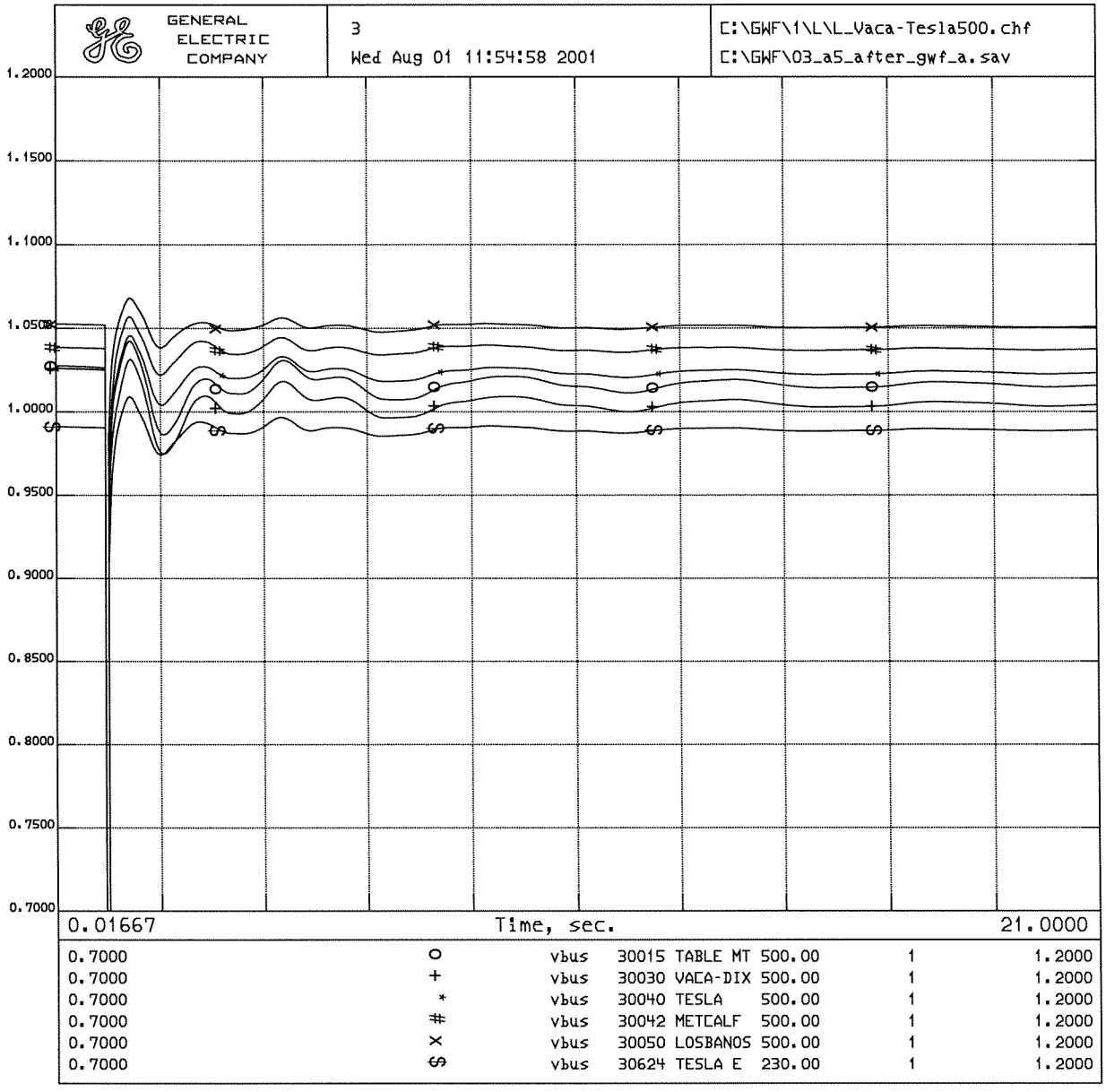

GWF 258 MW Tracy Power Plant Project
2003 Summer Peak Base Case, Stability Study
GWF CT 1&2 @ 85.9 MW and ST @ 86.6 MW
3 phase 4 cycle fault at the Tesla 500 kV bus followed
by loss of the Tesla - Vaca-Dixon 500 kV line

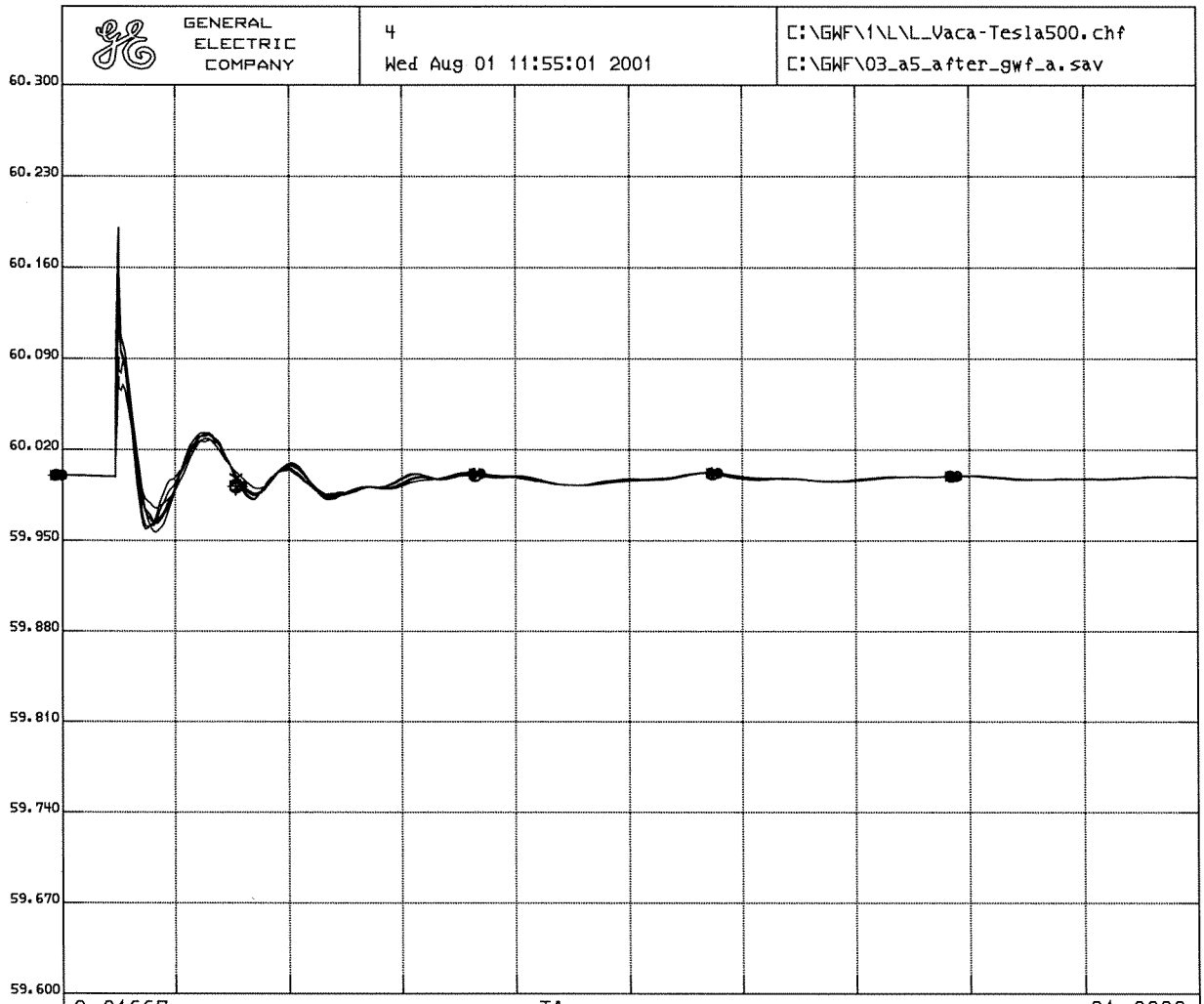

59.600	o	fbus	30015 TABLE MT 500.00	1	60.300
59.600	+	fbus	30030 VACA-DIX 500.00	1	60.300
59.600	*	fbus	30040 TESLA 500.00	1	60.300
59.600	#	fbus	30042 METCALF 500.00	1	60.300
59.600	×	fbus	30050 LOSBANOS 500.00	1	60.300
59.600	$	fbus	30624 TESLA E 230.00	1	60.300

GWF 258 MW Tracy Power Plant Project
2003 Summer Peak Base Case, Stability Study
GWF CT 1&2 @ 85.9 MW and ST @ 86.6 MW
3 phase 4 cycle fault at the Tesla 500 kV bus followed
by loss of the Tesla - Vaca-Dixon 500 kV line

Category C, e) A three-phase fault with a normal 4-cycle clearing time at the Tracy 500 kV bus, followed by a simultaneous loss of the Tesla-Tracy and Tracy-Los Banos 500 kV lines.

PLOT 1 : Project Generator Terminal Voltages and Angles
PLOT 2 : Project Generator Power and Speed
PLOT 3 : Selected Bus Voltages Adjacent to Fault
PLOT 4 : Selected Bus Frequencies Adjacent to Fault

GENERAL ELECTRIC COMPANY

1

Wed Aug 01 11:37:41 2001

C:\GWF\2\G\G_Tracy-DLO-ns.chf

C:\GWF\03_a5_after_gwf_a.sav

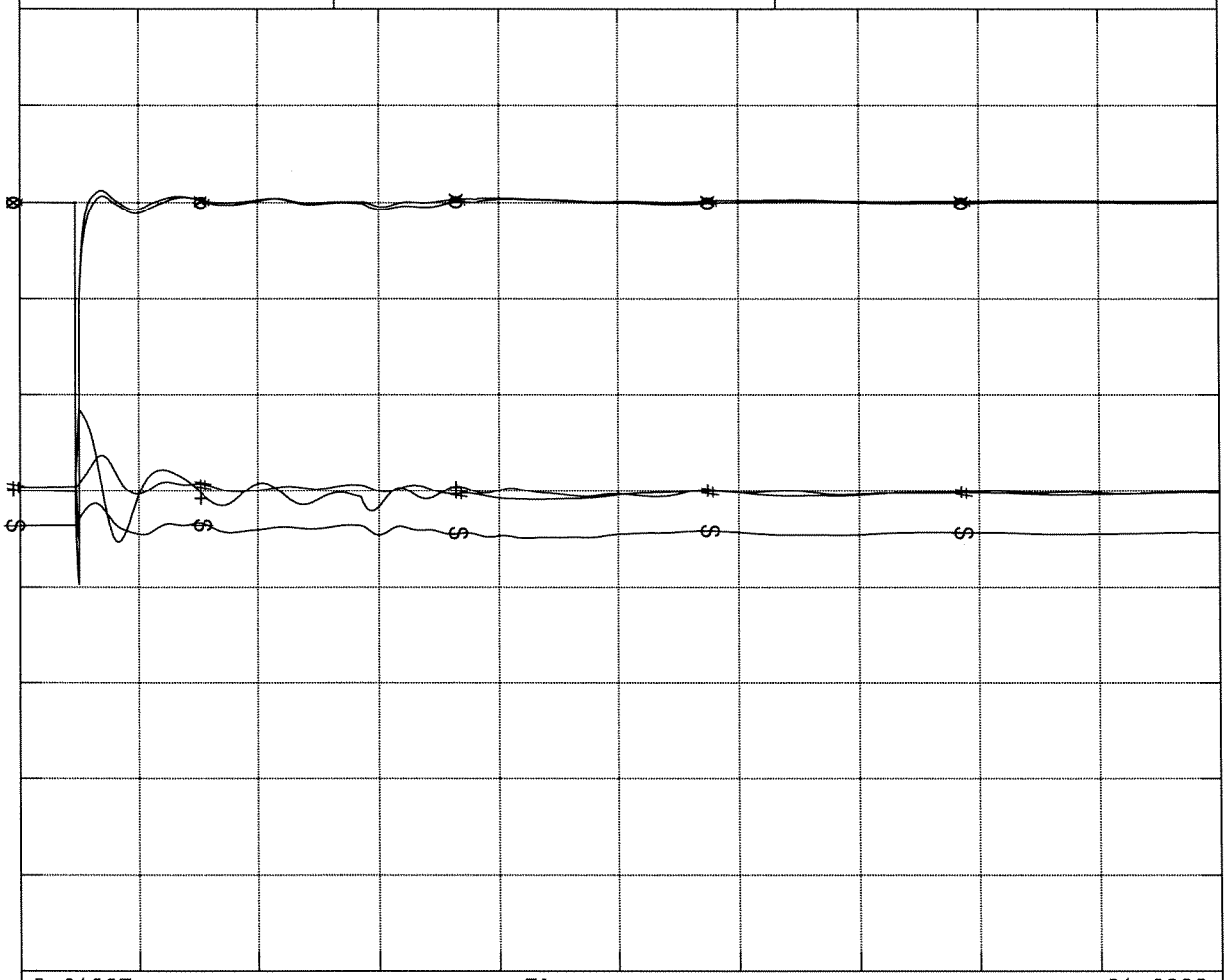

0.01667	Time, sec.						21.0000
0.2000	o	vt	33805	GWFTRCY1	13.80	1	1.2000
0.9900	+	spd	33805	GWFTRCY1	13.80	1	1.0100
0.2000	*	vt	33807	GWFTRCY2	13.80	1	1.2000
-100.0	#	ang	33807	GWFTRCY2	13.80	1	100.00
0.2000	x	vt	33809	GWFTRCY3	13.80	1	1.2000
-100.0	$	ang	33809	GWFTRCY3	13.80	1	100.00

GWF 258 MW Tracy Power Plant Project
2003 Summer Peak Base Case, Stability Study
GWF CT 1&2 @ 85.9 MW and ST @ 86.6 MW
Tracy - Tesla and Tracy - Los Banos 230 kV DLO
3 phase 4 cycle fault at Tesla 230 kV bus

GENERAL ELECTRIC COMPANY	2 Wed Aug 01 11:37:51 2001	C:\GWF\2\G\G_Tracy-DLO-ns.chf C:\GWF\03_a5_after_gwf_a.sav

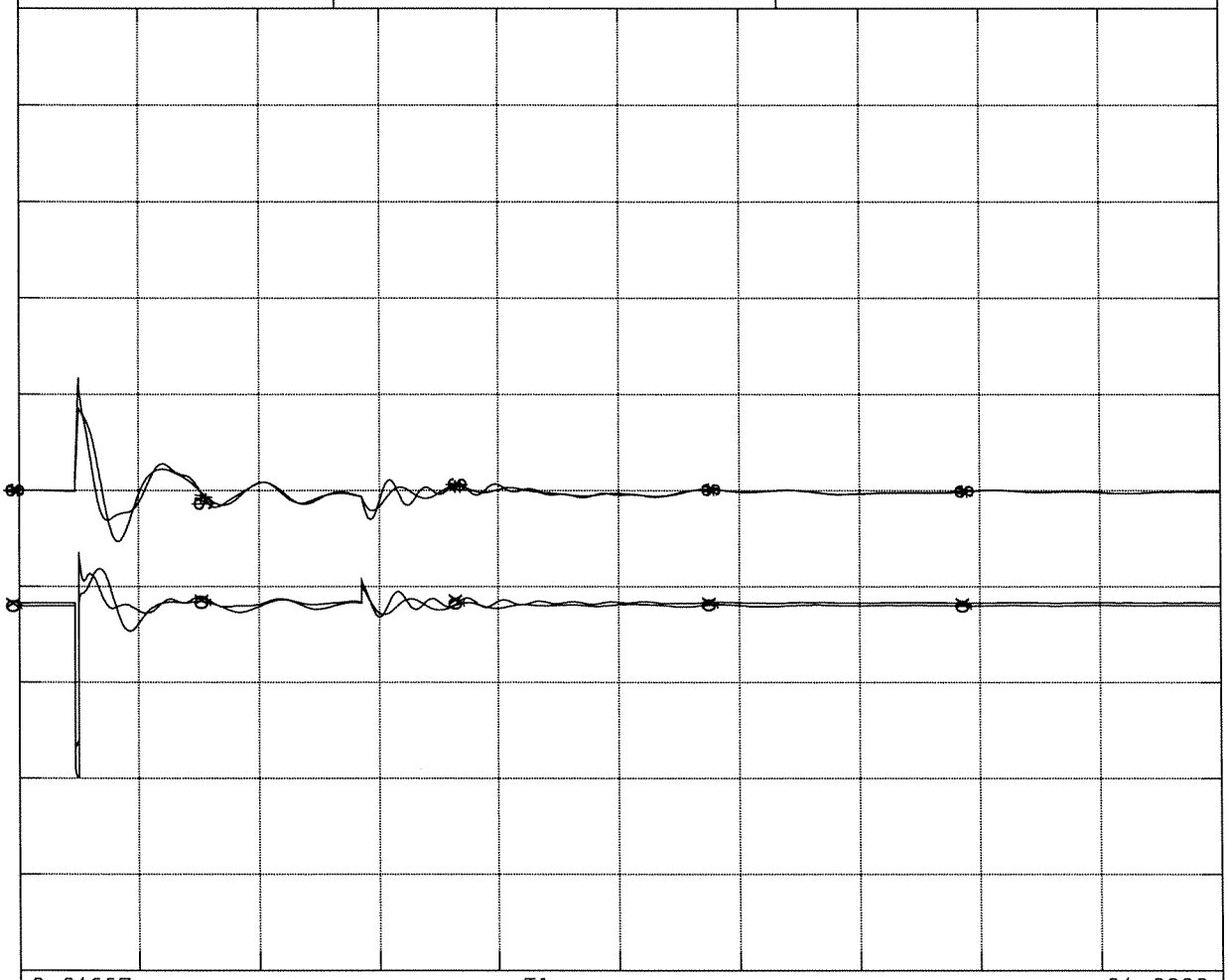

0.01667	Time, sec.	21.0000

0.0000	o	pg	33805	GWFTRCY1	13.80	1	226.20
0.9900	+	spd	33805	GWFTRCY1	13.80	1	1.0100
0.0000	*	pg	33807	GWFTRCY2	13.80	1	226.20
0.9900	#	spd	33807	GWFTRCY2	13.80	1	1.0100
0.0000	x	pg	33809	GWFTRCY3	13.80	1	226.20
0.9900	$	spd	33809	GWFTRCY3	13.80	1	1.0100

GWF 258 MW Tracy Power Plant Project
2003 Summer Peak Base Case, Stability Study
GWF CT 1&2 @ 85.9 MW and ST @ 86.6 MW
Tracy - Tesla and Tracy - Los Banos 230 kV DLO
3 phase 4 cycle fault at Tesla 230 kV bus

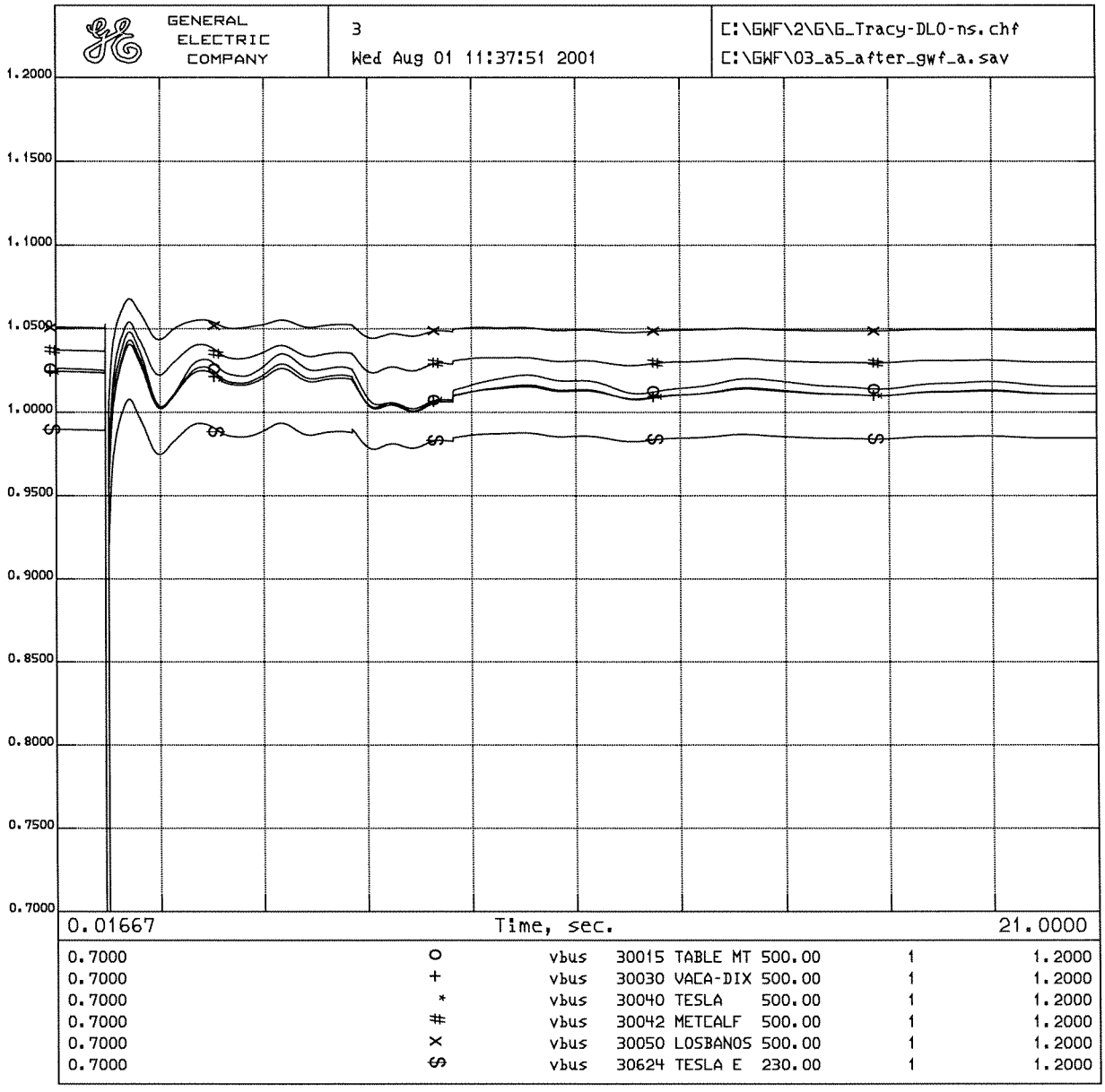

GWF 258 MW Tracy Power Plant Project
2003 Summer Peak Base Case, Stability Study
GWF CT 1&2 @ 85.9 MW and ST @ 86.6 MW
Tracy - Tesla and Tracy - Los Banos 230 kV DLO
3 phase 4 cycle fault at Tesla 230 kV bus

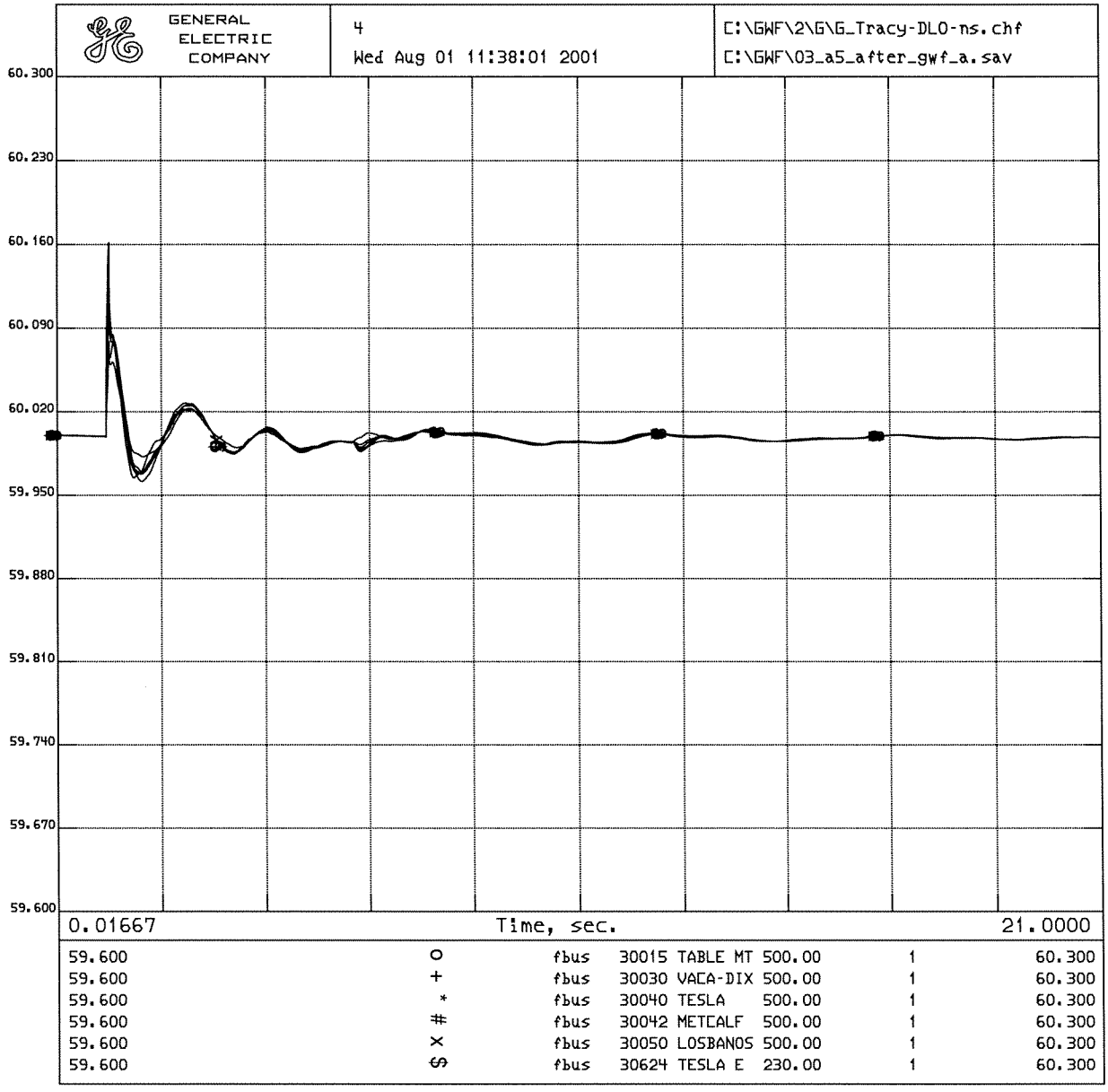

GWF 258 MW Tracy Power Plant Project
2003 Summer Peak Base Case, Stability Study
GWF CT 1&2 @ 85.9 MW and ST @ 86.6 MW
Tracy - Tesla and Tracy - Los Banos 230 kV DLO
3 phase 4 cycle fault at Tesla 230 kV bus

Category C, b) A three-phase fault with the normal 6-cycle clearing time at the Tesla 230 kV bus, followed by simultaneous loss of Tesla - Pittsburg #1 and #2 230 kV lines.

PLOT 1 : Project Generator Terminal Voltages and Angles
PLOT 2 : Project Generator Power and Speed
PLOT 3 : Selected Bus Voltages Adjacent to Fault
PLOT 4 : Selected Bus Frequencies Adjacent to Fault

GENERAL ELECTRIC COMPANY

1

Wed Aug 01 09:11:58 2001

C:\GWF\2\D\D_Tesla-Pitsburg#1&#2.chf

C:\GWF\03_a5_after_gwf_a.sav

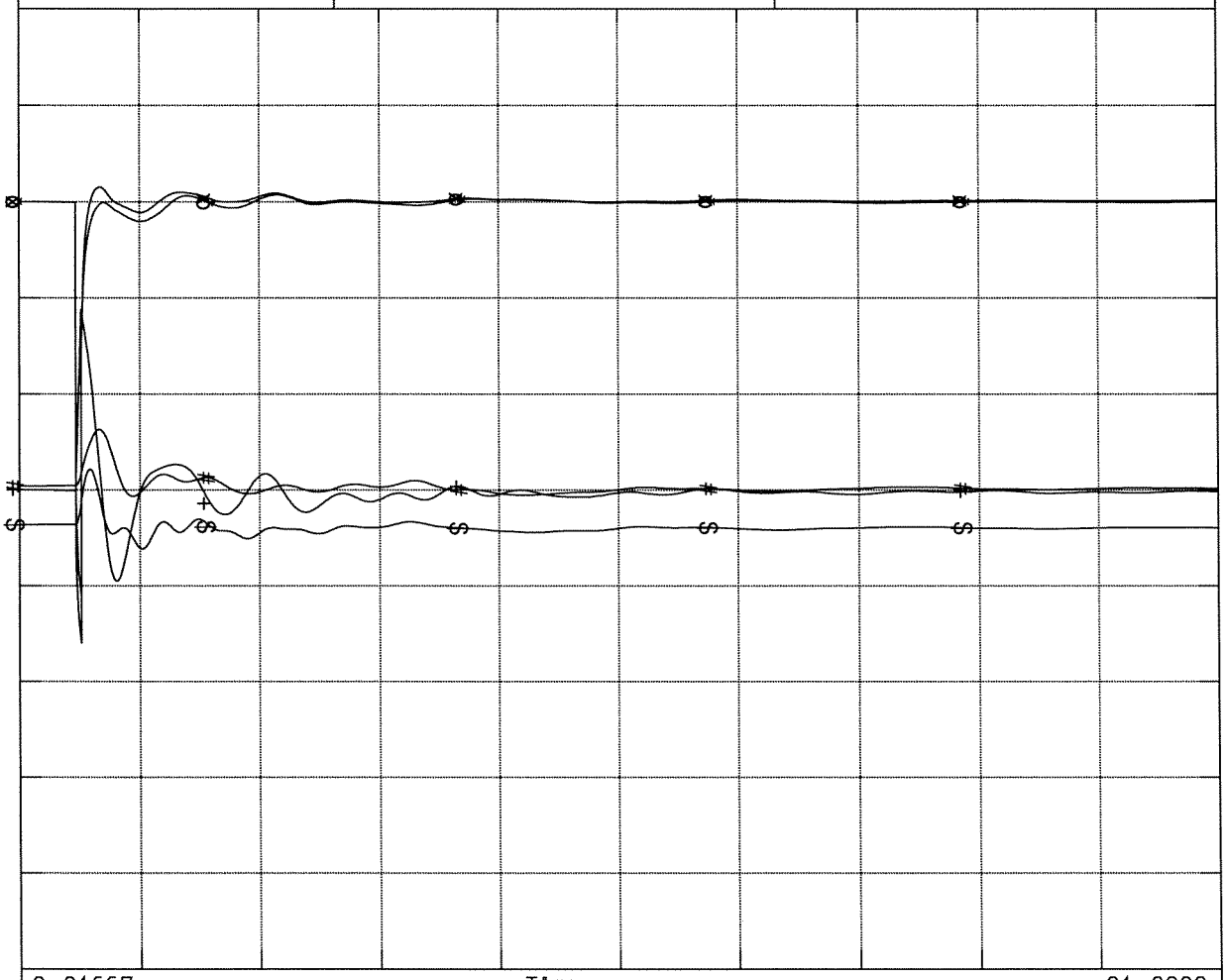

0.01667 Time, sec. 21.0000

0.2000	o	vt	33805	GWFTRCY1	13.80	1	1.2000
0.9900	+	spd	33805	GWFTRCY1	13.80	1	1.0100
0.2000	*	vt	33807	GWFTRCY2	13.80	1	1.2000
-100.0	#	ang	33807	GWFTRCY2	13.80	1	100.00
0.2000	x	vt	33809	GWFTRCY3	13.80	1	1.2000
-100.0	⊗	ang	33809	GWFTRCY3	13.80	1	100.00

GWF 258 MW Tracy Power Plant Project
2003 Summer Peak Base Case, Stability Study
GWF CT 1&2 @ 85.9 MW and ST @ 86.6 MW
Tesla - Pittsburg #1 and #2 230 kV DLO
3 phase 4 cycle fault at Tesla 230 kV bus

GENERAL ELECTRIC COMPANY

2

Wed Aug 01 09:12:10 2001

C:\GWF\2\D\D_Tesla-Pitsburg#1&#2.chf

C:\GWF\03_a5_after_gwf_a.sav

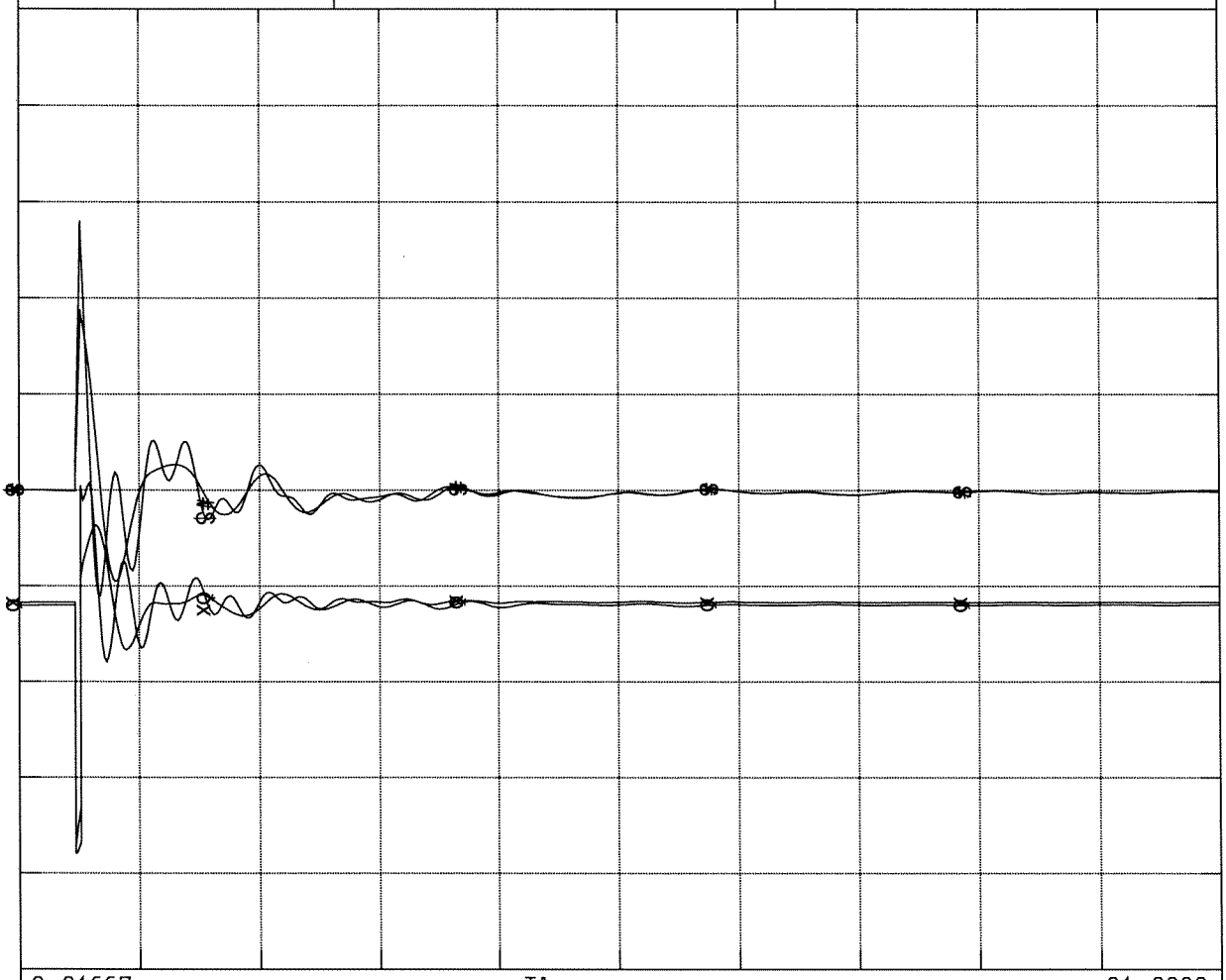

0.01667 Time, sec. 21.0000

0.0000	o	pg	33805	GWFTRCY1	13.80	1	226.20
0.9900	+	spd	33805	GWFTRCY1	13.80	1	1.0100
0.0000	*	pg	33807	GWFTRCY2	13.80	1	226.20
0.9900	#	spd	33807	GWFTRCY2	13.80	1	1.0100
0.0000	x	pg	33809	GWFTRCY3	13.80	1	226.20
0.9900	$	spd	33809	GWFTRCY3	13.80	1	1.0100

GWF 258 MW Tracy Power Plant Project
2003 Summer Peak Base Case, Stability Study
GWF CT 1&2 @ 85.9 MW and ST @ 86.6 MW
Tesla - Pittsburg #1 and #2 230 kV DLO
3 phase 4 cycle fault at Tesla 230 kV bus

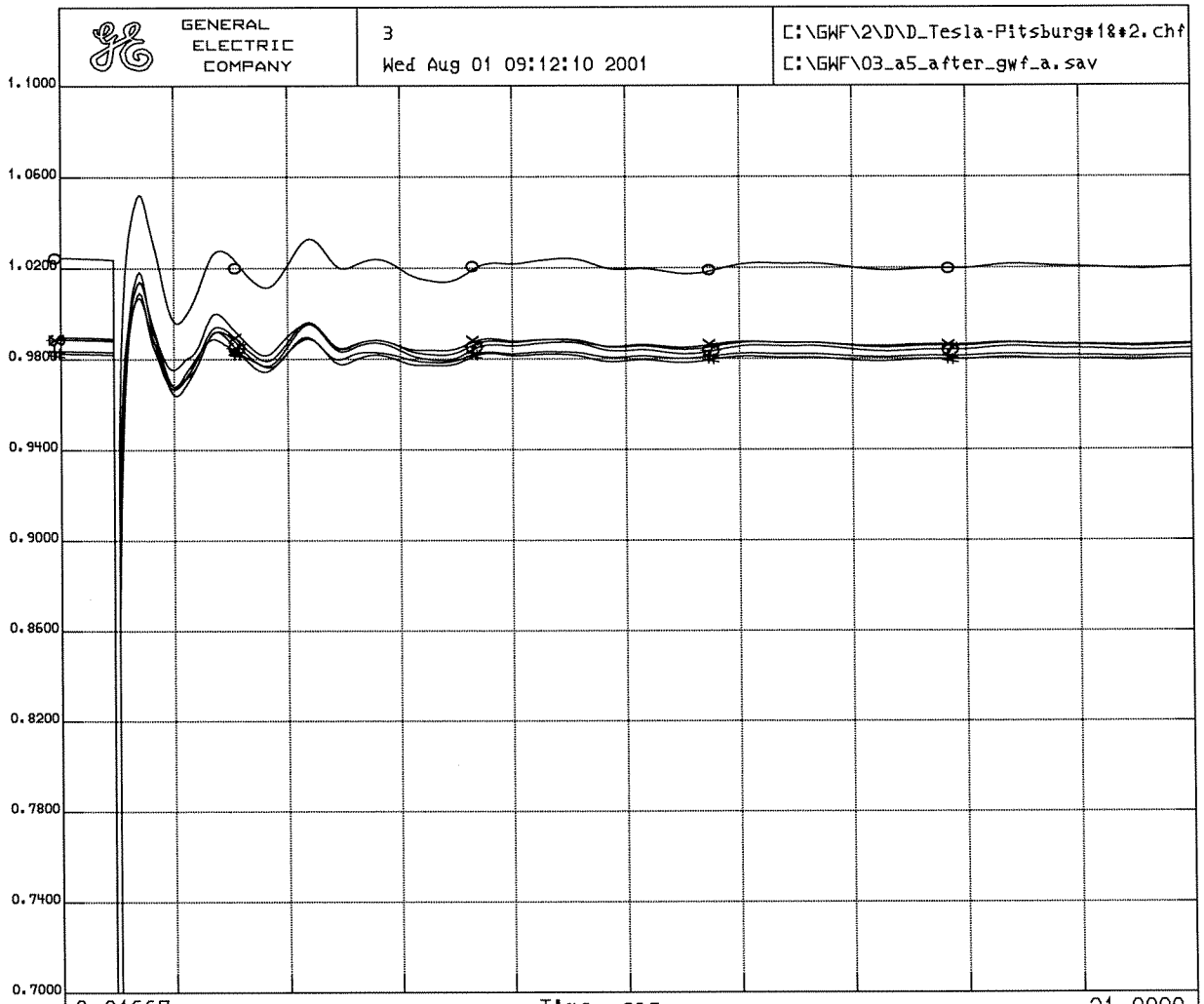

0.7000	o	vbus	30040	TESLA	500.00	1	1.1000
0.7000	+	vbul	30505	WEBER	230.00	1	1.1000
0.7000	*	vbus	30624	TESLA E	230.00	1	1.1000
0.7000	#	vbus	30630	NEWARK D	230.00	1	1.1000
0.7000	×	vbus	30703	RAVENSWD	230.00	1	1.1000
0.7000	⊗	vbus	37585	TRCY PMP	230.00	1	1.1000

GWF 258 MW Tracy Power Plant Project
2003 Summer Peak Base Case, Stability Study
GWF CT 1&2 @ 85.9 MW and ST @ 86.6 MW
Tesla - Pittsburg #1 and #2 230 kV DLO
3 phase 4 cycle fault at Tesla 230 kV bus

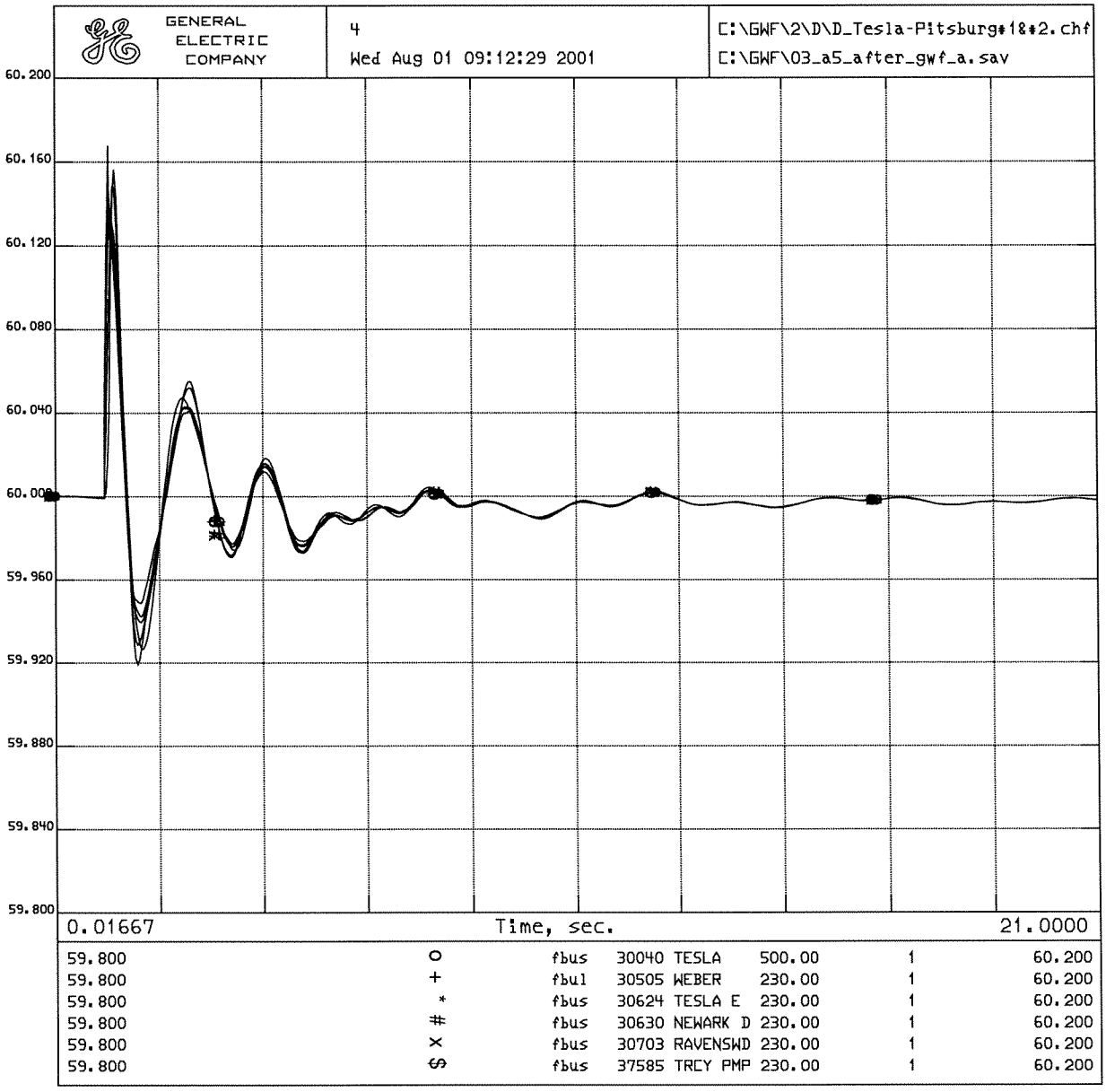

GWF 258 MW Tracy Power Plant Project
2003 Summer Peak Base Case, Stability Study
GWF CT 1&2 @ 85.9 MW and ST @ 86.6 MW
Tesla - Pittsburg #1 and #2 230 kV DLO
3 phase 4 cycle fault at Tesla 230 kV bus

Category C, d) A three-phase fault with a normal 4-cycle clearing time at the Tesla 500 kV bus, followed by a simultaneous loss of the Table Mountain-Tesla and Vaca-Tesla 500 kV lines.

PLOT 1 : Project Generator Terminal Voltages and Angles
PLOT 2 : Project Generator Power and Speed
PLOT 3 : Selected Bus Voltages Adjacent to Fault
PLOT 4 : Selected Bus Frequencies Adjacent to Fault

GENERAL ELECTRIC COMPANY

1

Wed Aug 01 12:23:40 2001

C:\GWF\2\F\F_Tesla-Vaca&TblMt.chf

C:\GWF\03_a5_after_gwf_a.sav

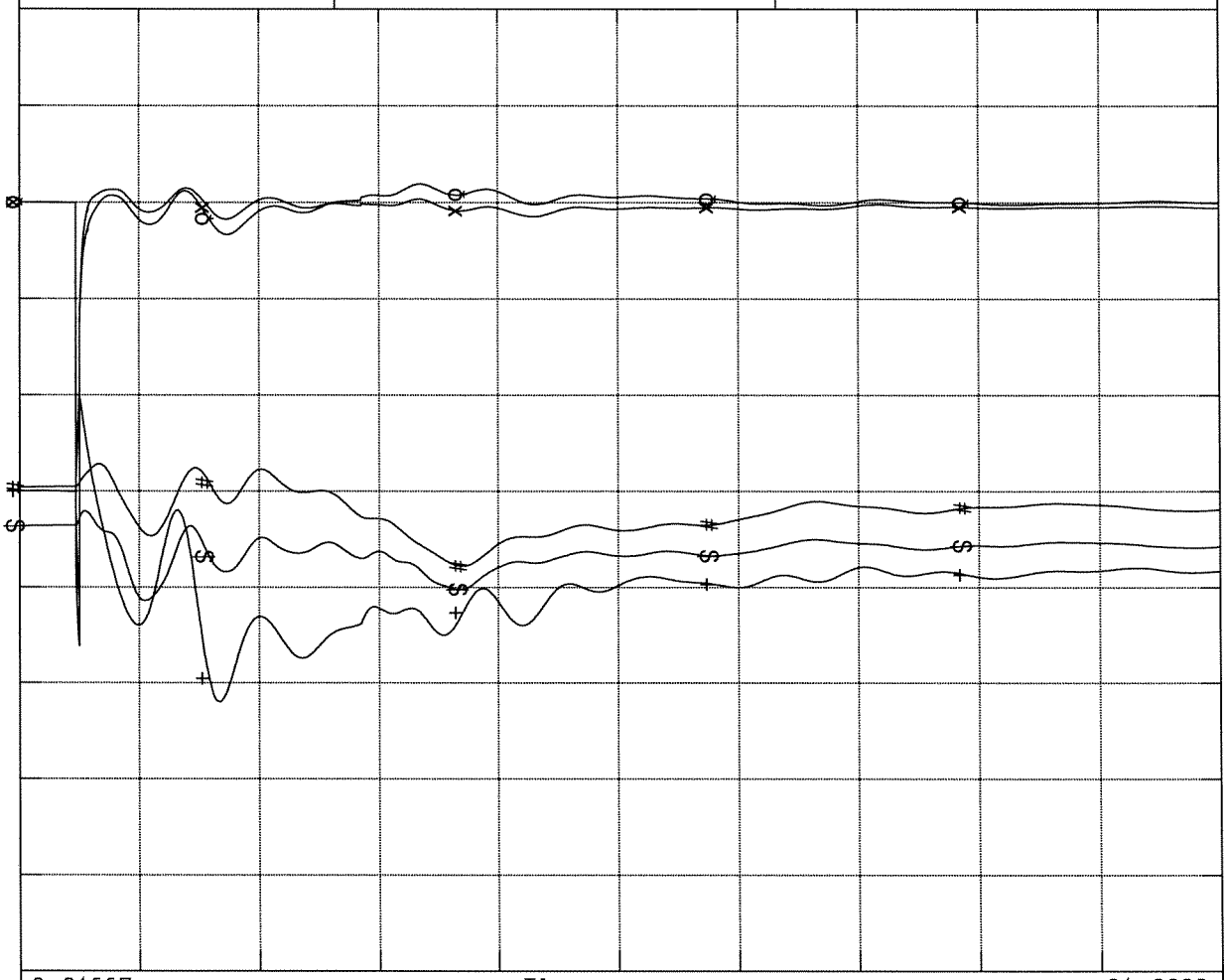

0.01667 Time, sec. 21.0000

0.2000	o	vt	33805	GWFTRCY1	13.80	1	1.2000
0.9900	+	spd	33805	GWFTRCY1	13.80	1	1.0100
0.2000	*	vt	33807	GWFTRCY2	13.80	1	1.2000
-100.0	#	ang	33807	GWFTRCY2	13.80	1	100.00
0.2000	x	vt	33809	GWFTRCY3	13.80	1	1.2000
-100.0	$	ang	33809	GWFTRCY3	13.80	1	100.00

GWF 258 MW Tracy Power Plant Project
2003 Summer Peak Base Case, Stability Study
GWF CT 1&2 @ 85.9 MW and ST @ 86.6 MW
3 phase 4 cycle fault at the GWF Tesla 500 kV bus followed
the Table Mountain - Tesla and Vaca-Dixon - Tesla 500 kV DLO

GENERAL ELECTRIC COMPANY

2

Wed Aug 01 12:23:56 2001

C:\GWF\2\F\F_Tesla-Vaca&TblMt.chf

C:\GWF\03_a5_after_gwf_a.sav

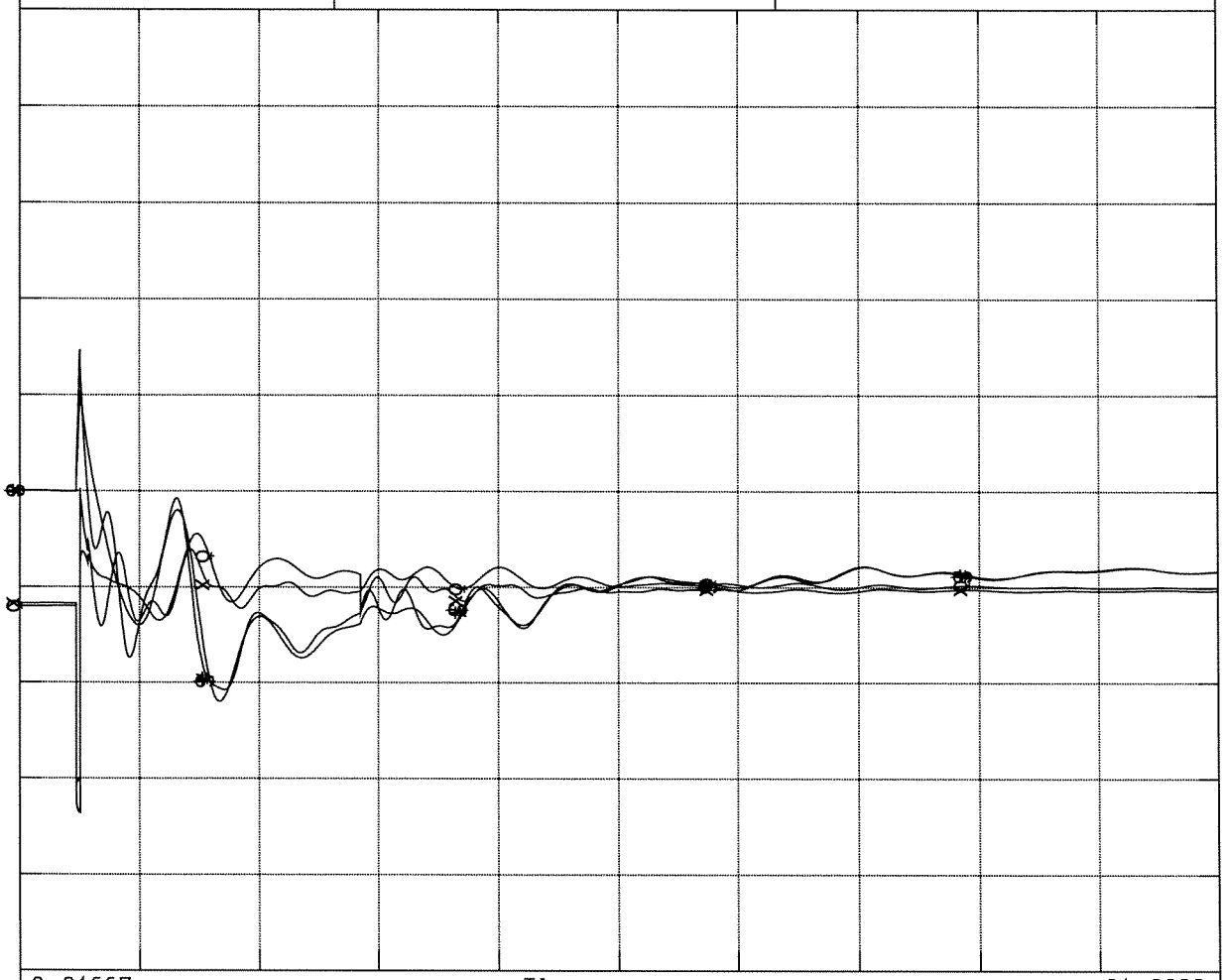

0.01667 Time, sec. 21.0000

0.0000	o	pg	33805	GWFTRCY1	13.80	1	226.20
0.9900	+	spd	33805	GWFTRCY1	13.80	1	1.0100
0.0000	*	pg	33807	GWFTRCY2	13.80	1	226.20
0.9900	#	spd	33807	GWFTRCY2	13.80	1	1.0100
0.0000	x	pg	33809	GWFTRCY3	13.80	1	226.20
0.9900	$	spd	33809	GWFTRCY3	13.80	1	1.0100

GWF 258 MW Tracy Power Plant Project
2003 Summer Peak Base Case, Stability Study
GWF CT 1&2 @ 85.9 MW and ST @ 86.6 MW
3 phase 4 cycle fault at the GWF Tesla 500 kV bus followed
the Table Mountain - Tesla and Vaca-Dixon - Tesla 500 kV DLO

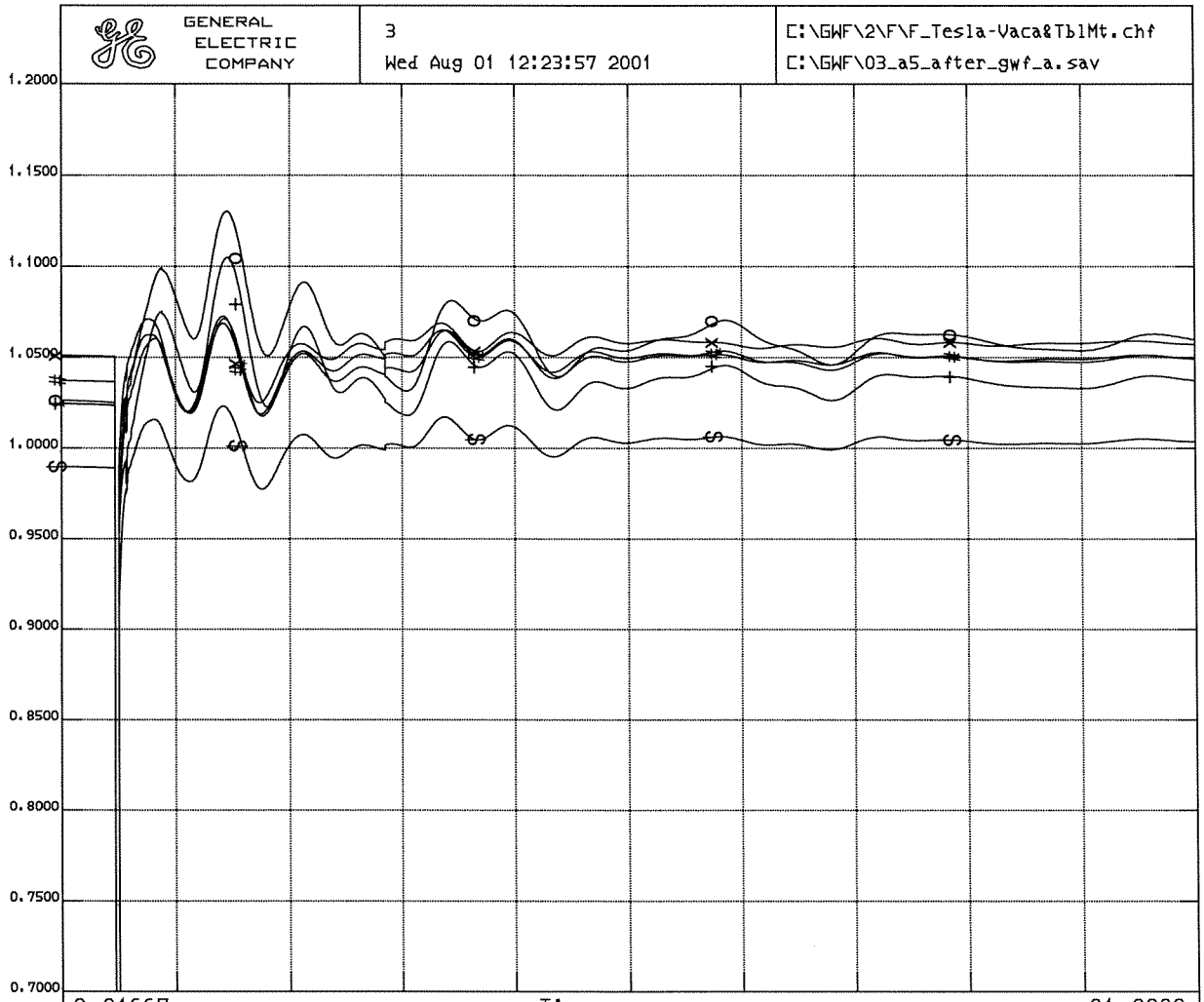

0.7000	o	vbus	30015 TABLE MT 500.00	1	1.2000
0.7000	+	vbus	30030 VACA-DIX 500.00	1	1.2000
0.7000	*	vbus	30040 TESLA 500.00	1	1.2000
0.7000	#	vbus	30042 METCALF 500.00	1	1.2000
0.7000	×	vbus	30050 LOSBANOS 500.00	1	1.2000
0.7000	⊗	vbus	30624 TESLA E 230.00	1	1.2000

GWF 258 MW Tracy Power Plant Project
2003 Summer Peak Base Case, Stability Study
GWF CT 1&2 @ 85.9 MW and ST @ 86.6 MW
3 phase 4 cycle fault at the GWF Tesla 500 kV bus followed
the Table Mountain - Tesla and Vaca-Dixon - Tesla 500 kV DLO

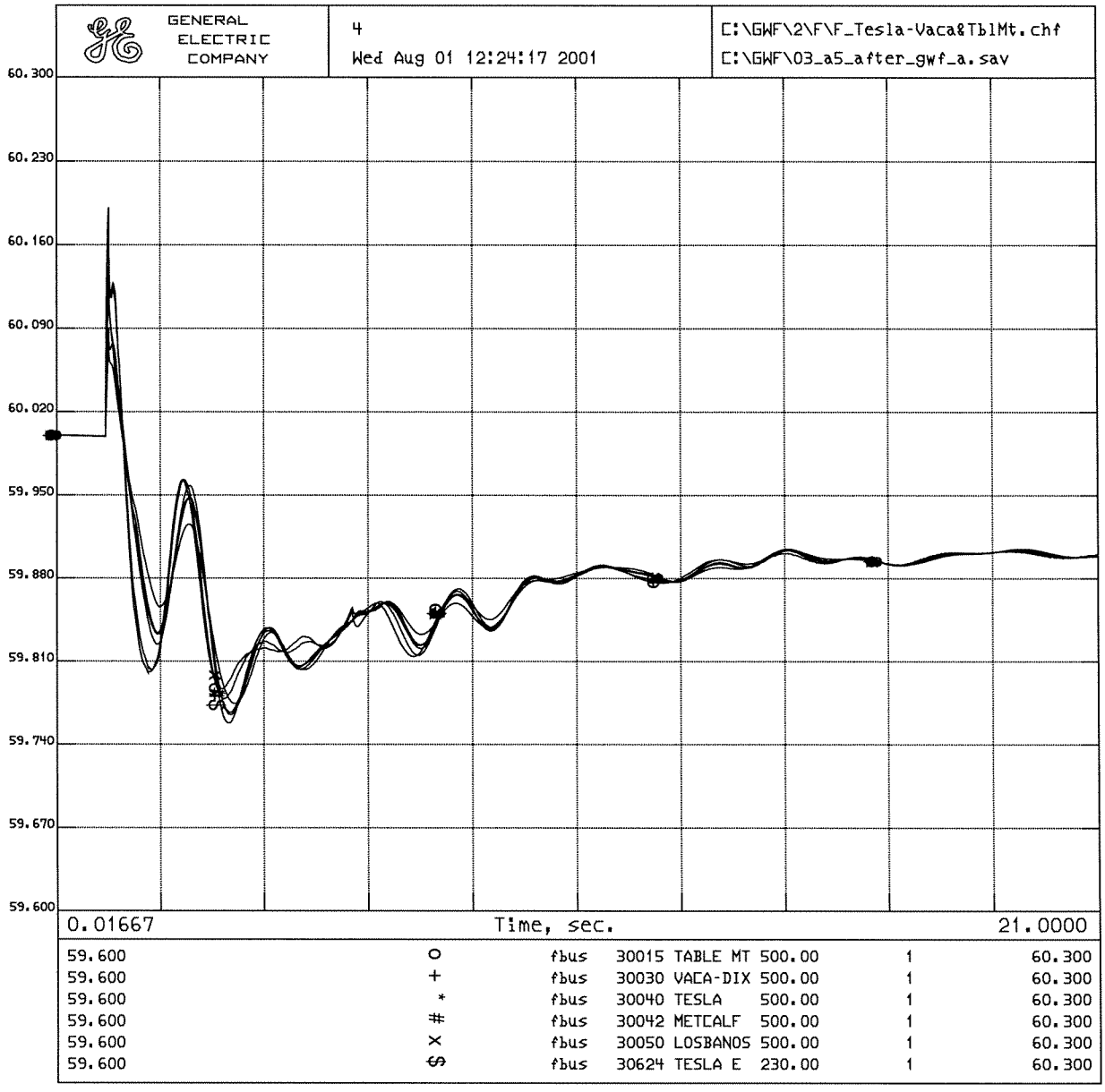

GWF 258 MW Tracy Power Plant Project
2003 Summer Peak Base Case, Stability Study
GWF CT 1&2 @ 85.9 MW and ST @ 86.6 MW
3 phase 4 cycle fault at the GWF Tesla 500 kV bus followed
the Table Mountain - Tesla and Vaca-Dixon - Tesla 500 kV DLO

Category C, a) A three-phase fault with the normal 6-cycle clearing time at the Tesla 230 kV bus, followed by simultaneous loss of Tesla - Newark #1 and Tesla - Ravenswood #1 230 kV lines.

PLOT 1 : Project Generator Terminal Voltages and Angles
PLOT 2 : Project Generator Power and Speed
PLOT 3 : Selected Bus Voltages Adjacent to Fault
PLOT 4 : Selected Bus Frequencies Adjacent to Fault

GENERAL ELECTRIC COMPANY

1

Wed Aug 01 09:10:42 2001

C:\GWF\2\C\C_Tesla-Raves&Newar.chf

C:\GWF\03_a5_after_gwf_a.sav

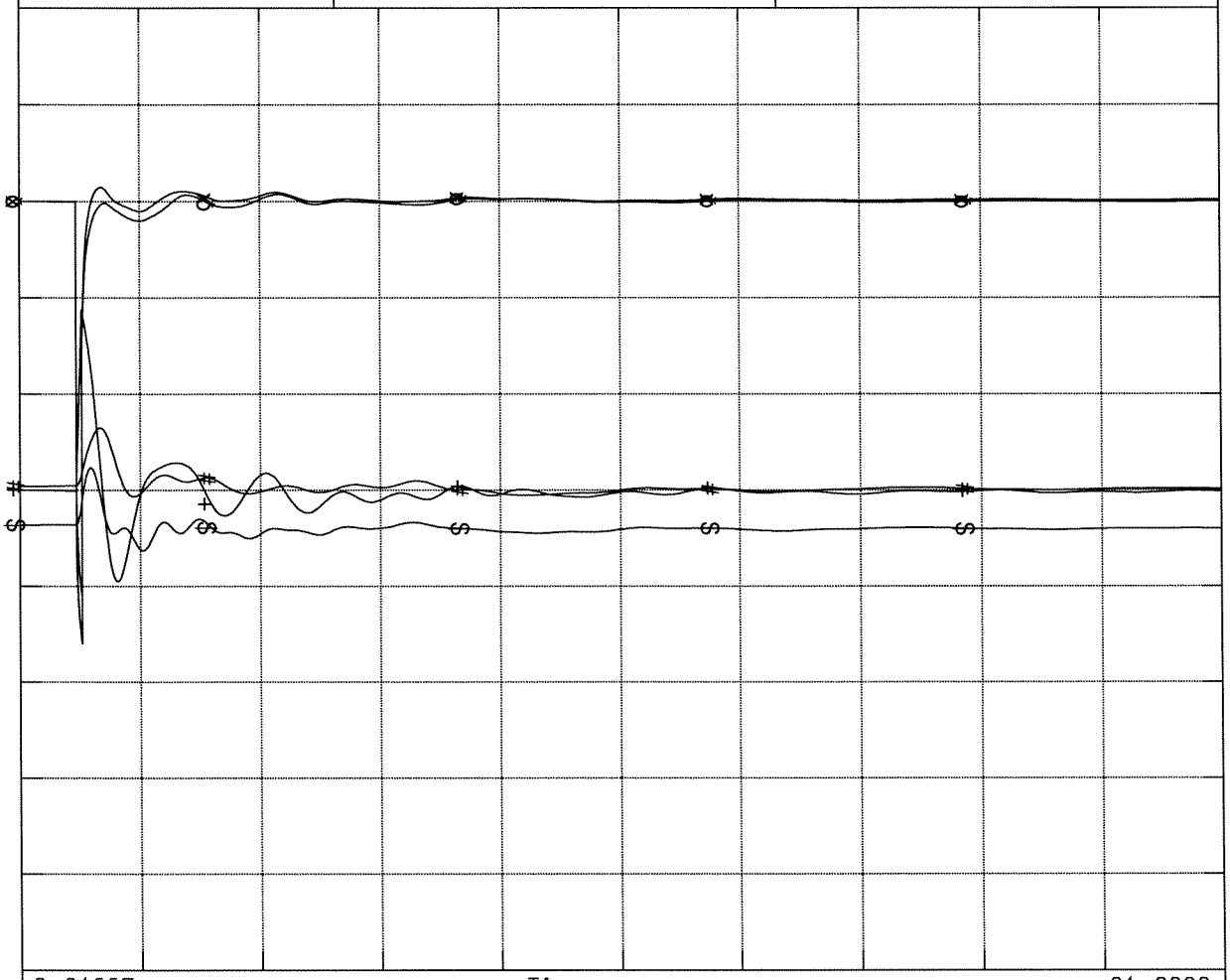

0.01667 Time, sec. 21.0000

0.2000	o	vt	33805	GWFTRCY1	13.80	1	1.2000
0.9900	+	spd	33805	GWFTRCY1	13.80	1	1.0100
0.2000	*	vt	33807	GWFTRCY2	13.80	1	1.2000
-100.0	#	ang	33807	GWFTRCY2	13.80	1	100.00
0.2000	×	vt	33809	GWFTRCY3	13.80	1	1.2000
-100.0	∽	ang	33809	GWFTRCY3	13.80	1	100.00

GWF 258 MW Tracy Power Plant Project
2003 Summer Peak Base Case, Stability Study
GWF CT 1&2 @ 85.9 MW and ST @ 86.6 MW
Tesla - Ravenswood and Telsa - Newark 230 kV DLO
3 phase 4 cycle fault at Tesla 230 kV bus

GENERAL ELECTRIC COMPANY	2 Wed Aug 01 09:10:48 2001	C:\GWF\2\C\C_Tesla-Raves&Newar.chf C:\GWF\03_a5_after_gwf_a.sav

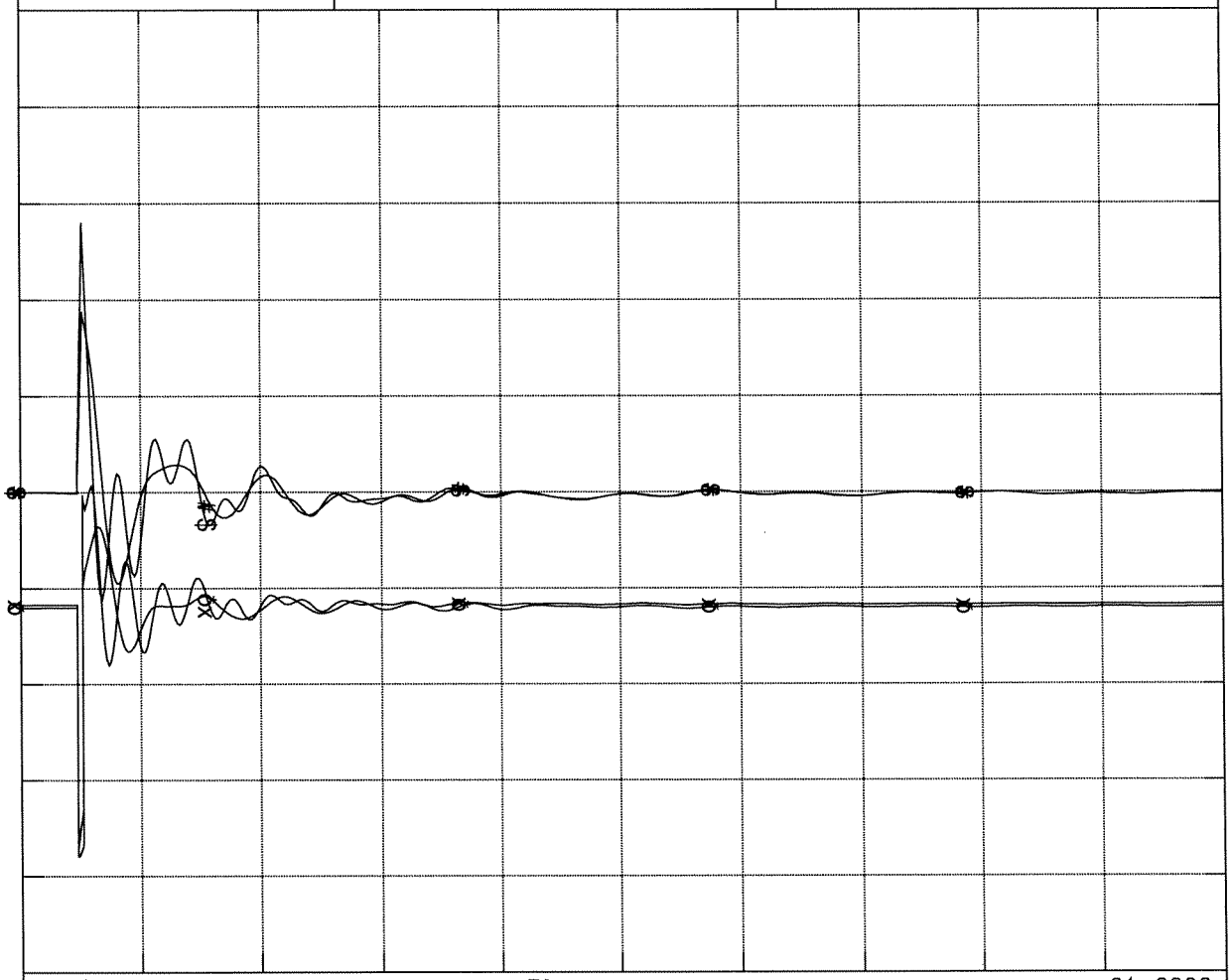

0.01667 Time, sec. 21.0000

0.0000	o	pg	33805	GWFTRCY1	13.80	1	226.20
0.9900	+	spd	33805	GWFTRCY1	13.80	1	1.0100
0.0000	*	pg	33807	GWFTRCY2	13.80	1	226.20
0.9900	#	spd	33807	GWFTRCY2	13.80	1	1.0100
0.0000	x	pg	33809	GWFTRCY3	13.80	1	226.20
0.9900	$	spd	33809	GWFTRCY3	13.80	1	1.0100

GWF 258 MW Tracy Power Plant Project
2003 Summer Peak Base Case, Stability Study
GWF CT 1&2 @ 85.9 MW and ST @ 86.6 MW
Tesla - Ravenswood and Telsa - Newark 230 kV DLO
3 phase 4 cycle fault at Tesla 230 kV bus

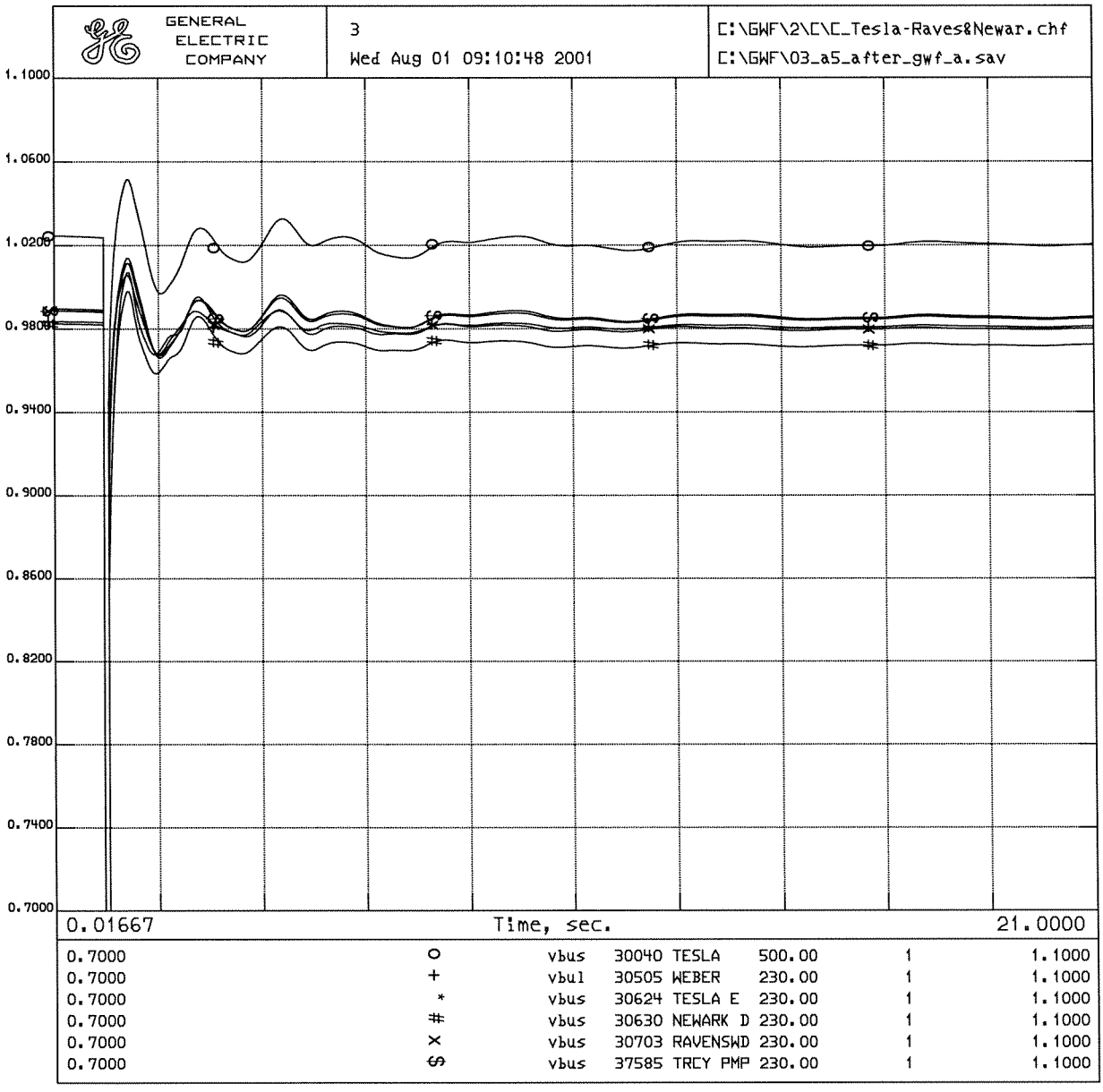

GWF 258 MW Tracy Power Plant Project
2003 Summer Peak Base Case, Stability Study
GWF CT 1&2 @ 85.9 MW and ST @ 86.6 MW
Tesla - Ravenswood and Telsa - Newark 230 kV DLO
3 phase 4 cycle fault at Tesla 230 kV bus

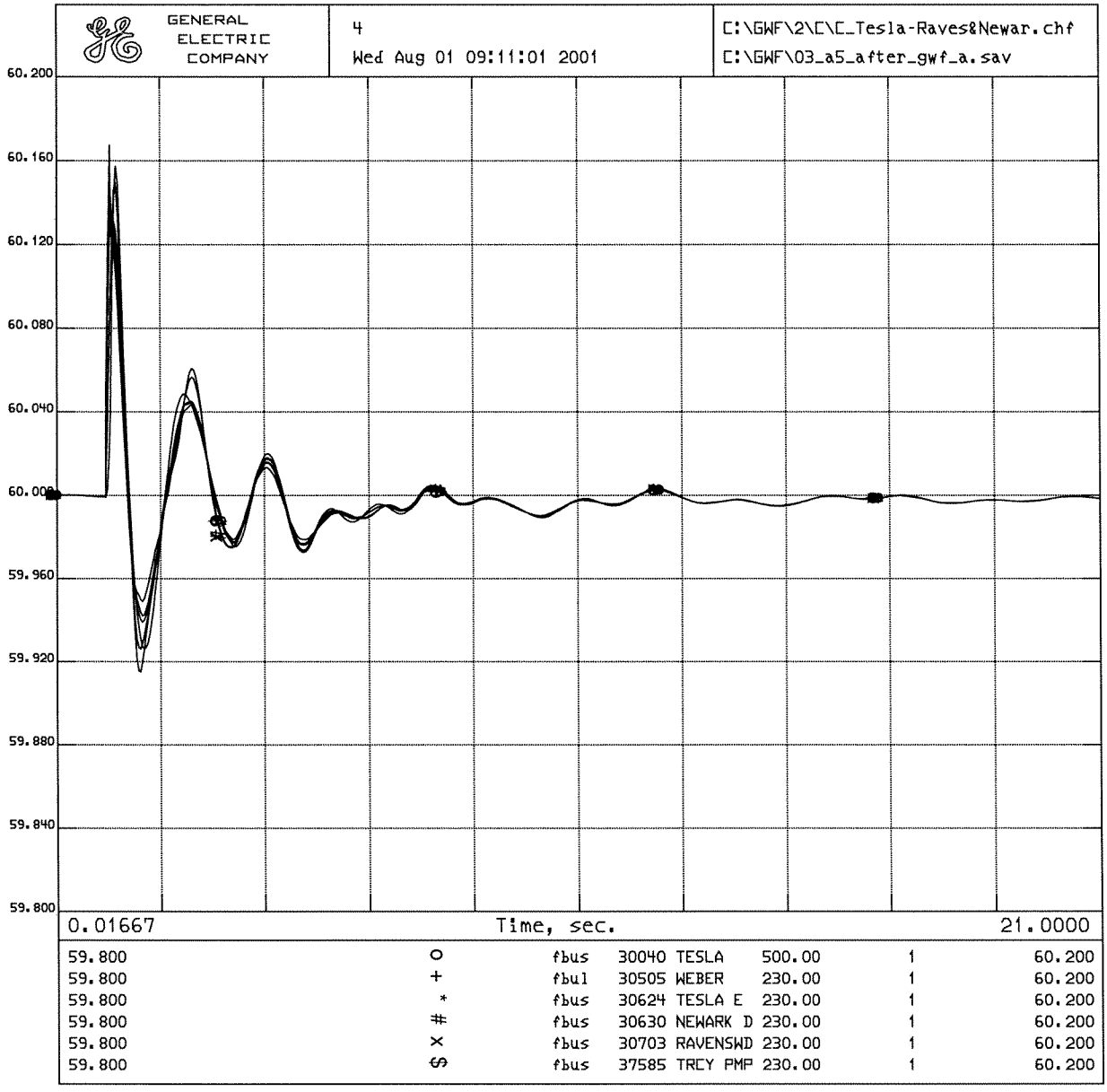

GWF 258 MW Tracy Power Plant Project
2003 Summer Peak Base Case, Stability Study
GWF CT 1&2 @ 85.9 MW and ST @ 86.6 MW
Tesla - Ravenswood and Telsa - Newark 230 kV DLO
3 phase 4 cycle fault at Tesla 230 kV bus

Appendix A-2

Preliminary Fault Study for Draft GWF Tracy SIS/FS, Tesla 230kV Bus "E" Radial Connection -- 2002

Memorandum

Date: July 26, 2001 **File #:**

To: E&P - Transmission Planning

From: E&P - System Protection

Subject: GWF Power Systems Tracy Draft SIS/FS Study Plan Fault Study - 2002

MANHO YEUNG:

Please find attached the Preliminary fault study for the DRAFT GWF Power Systems Tracy SIS/FS Study Plan. The attached are preliminary fault duty impacts resulting from the project.

This preliminary fault study will be updated and the preliminary protection requirements provided once the Final Study Plan is issued.

If you have any question(s), please call Greg Langan at 8-720-7150,

BY: Simon Chiang
Simon Chiang

GAL(720-7150):gald

Attachment - GWF Tracy Tesla 230kV Bus E Radial Fault study 7-26-01 .doc

cc:

Crispin Sullivan	Claudia Chiang	Tom Brannon
Steven Ng	Greg Langan	Glenn Rounds
Jim Norwood	Lane Newby	
Thomas Bantz	Felix Karchemskiy	
Russ Lo		

Preliminary Fault Study for Draft GWF Tracy SIS/FS, Tesla 230kV Bus 'E' Radial Connection - 2002:

Fault Study Assumptions:

The fault study considers the following system configuration:

GWF Tracy will be connected to the PG&E system through a new 230 kV generator tie line from the project site to the Tesla 230 kV bus. The new 230 kV line will be built by reconfiguring 2 miles of the Tesla - Westley 230 kV line and from 2.8 miles of new 230 kV line.

Presently the Tesla - Westley 230 kV line consists of 2 circuits of 795 ACSR tied together and suspended from a double tower circuit line. It terminates at Tesla 230 kV circuit breaker (CB) 262 at bus section E (Figure 2, Existing Configuration). After separating the 2 circuits, one circuit can be connected to the GWF Tracy Peaking Plant as the generator tie line and the remaining circuit can be retained for the Tesla - Westley 230 kV line.

By June 2002, the adjacent CB 252 and accompanying bay are expected to be vacant when the Tesla - ADCC 230 kV line will be relocated to Tesla 230 kV bus F (Figure 3, Anticipated Configuration).

The advantage of this interconnection plan is the ability to utilize existing towers and to minimize substation modifications and line reconductoring.

The new 230kV Tesla Bus C has the following lines and banks connected per the Single Line Diagram provided by Substation Engineering:

- New 500-230kV Bank #6
- Existing Pittsburgh-Tesla #1 & #2 230kV Lines

Future Tri-Valley configuration:

- Looped on the Contra Costa - Newark 230kV line.

Connection for the three Tesla 230kV Bus Sections:

- Bus C Paralleled with Bus D through a **switch**, and Bus D paralleled with Bus E through the existing 4 Ohm bus tie reactor.

NOTE: the reactor Ohms listed is the net Ohms of two bus section tie reactors in parallel (i.e. 4 ohm bus tie reactor = two 8 ohm reactors in parallel)

The fault study also considers all future projects outlined in the base case assumptions contained in the **DRAFT** System Impact / Facilities Study Plan for '*GWF Power Systems Tracy Peaking Plant Project*', dated July 2, 2001.

The base case will not include generation projects that are in the PG&E Generation Interconnection Queue but are scheduled to be on-line *after* 2003 (denoted by *). The following major generation projects will be included:

1) Calpine/Bechtel – 880 MW Delta Energy Center (DEC), interconnecting with the 230 kV bus at the Pittsburg Power Plant switchyard.

2) Calpine/Bechtel – 600 MW Metcalf Energy Center (MEC), interconnecting with the Metcalf - Monta Vista #4 230 kV line, through the MEC switchyard.

3) PG&E NEG – La Paloma generation facility interconnecting at Midway 230 kV bus section D; La Paloma generation facility will be will be modeled at 1110 MW in summer and 1160 MW in spring and winter.

4) Calpine – 500 MW Los Medanos Energy Center (LMEC), interconnecting with the 115 kV bus at the Pittsburg Power Plant switchyard.

5) Texaco – 338 MW Sunrise Generation Facility interconnecting at La Paloma Switching Station.

6) *Three Mountain Power Company – 530 MW project interconnecting to PG&E's Pit 1 - Pit 3 and Pit 1 - Cottonwood 230 kV lines.**

7) GWF – 99 MW Hanford, interconnecting to Kingsburg - Henrietta 115 kV line in Fresno area.

8) Duke Energy North America Corporation (DENA) – 1080 MW Moss Landing project (MLPP), interconnecting with the existing 230 kV bus at the Moss Landing Power Plant.

9) Southern Energy Company of California – 530 MW Contra Costa Power Plant Capacity Increase Project, interconnecting to Contra Costa PP 230 kV bus.

10) The Midway-Sunset generation facility will be 500 MW in summer, 540 MW in spring, and 540 MW winter. Midway-Sunset generation facility will be interconnected at Midway 230 kV bus section E.

11) Sempra – 500 MW Elk Hills Power Project, interconnecting at Midway 230 kV bus.

12) FPLE – 150 MW High Wind, tapping off the Vaca - Contra Costa #2 230 kV line.

13) *United Golden Gate PP – 595 MW generating facilities, interconnecting with the San Mateo - Martin #5 and #6 115 kV lines.* *

14) Morro Bay Modernization Project replacing the existing Morro Bay Power Plant with 1,200 MW of generation.

15) Calpine Corporation – 500 MW Sutter facility, interconnecting with WAPA's Elverta - Olinda and Elverta - Keswick 230 kV.

16) *FPLE – 560 MW Elverta Project, interconnecting with WAPA system.* *

17) Calpine – 1,070 MW East Altamont Generating Project interconnecting at the Tracy - Westley 230 kV circuit near Tracy Substation.

18) Project A - 150 MW project, interconnecting with Vaca Dixon - Contra Costa #1 230 kV line.

19) *Project B - 1156 MW project, interconnecting to the 230 kV bus at Tesla Substation. **

20) *Project C – 580 MW project, interconnecting to the 230 kV bus at Newark Substation. **

21) *Project D – 581 MW project, interconnecting to the 230 kV bus at Los Esteros Substation. **

22) *Mirant – 600 MW Potrero Unit 7 Project, interconnecting at Potrero and Hunters Point Substations. **

23) *Project E – 1000 MW project in the Fresno area. **

24) *Project F – 630 MW project, interconnecting at the Cottonwood - Vaca Dixon 230 kV lines. **

25) *Project G – 1350 MW project, interconnecting to the 500 kV system between Vaca Dixon and Tesla Substations. **

26) *Project H – 620 MW project, interconnecting at the East Shore 230 kV bus. **

27) *Project I – 1000 MW project, interconnecting at the 230 kV bus at Los Banos Substation. **

28) Edison Mission Energy – 200 MW Sunrise 2 Power Project, interconnecting at Midway 230 kV bus.

29) Project J – 96 MW project, interconnecting at Henrietta 70 kV bus.

GWF TRACY GENERATION PROJECT FAULT STUDY, 7-2001

230kV Radial Connection to Tesla Bus 'E' Based on DRAFT Study Plan Dated 7/2/2001

	Switch Between Bus C-D & 4 Ω Reactor Between Bus D-E							
	Before GWF				After GWF			
	3∅ Bus Fault	Min. 3∅ Fault Contribution	L-G Bus Fault	Min. L-G Fault Contribution	3∅ Bus Fault	Min. 3∅ Fault Contribution	L-G Bus Fault	Min. L-G Fault Contribution
Tesla 500kV	35,135	2,342	29,968	994	35,463	2,377	30,355	988
Tesla 230kV Bus C	64,885	441	63,617	475	65,572	441	64,511	472
Tesla 230kV Bus D	64,885	441	63,617	475	65,572	441	64,511	472
Tesla 230kV Bus E	54,483	1,801	52,448	921	56,397	1,802	54,839	903
Tesla 115kV	27,963	422	31,308	424	27,986	422	31,345	395
Westley 230kV	27,331	895	19,268	1,376	26,819	897	19,021	1,366
GWF 230kV	NA	NA	NA	NA	22,321	846	18,769	2,392