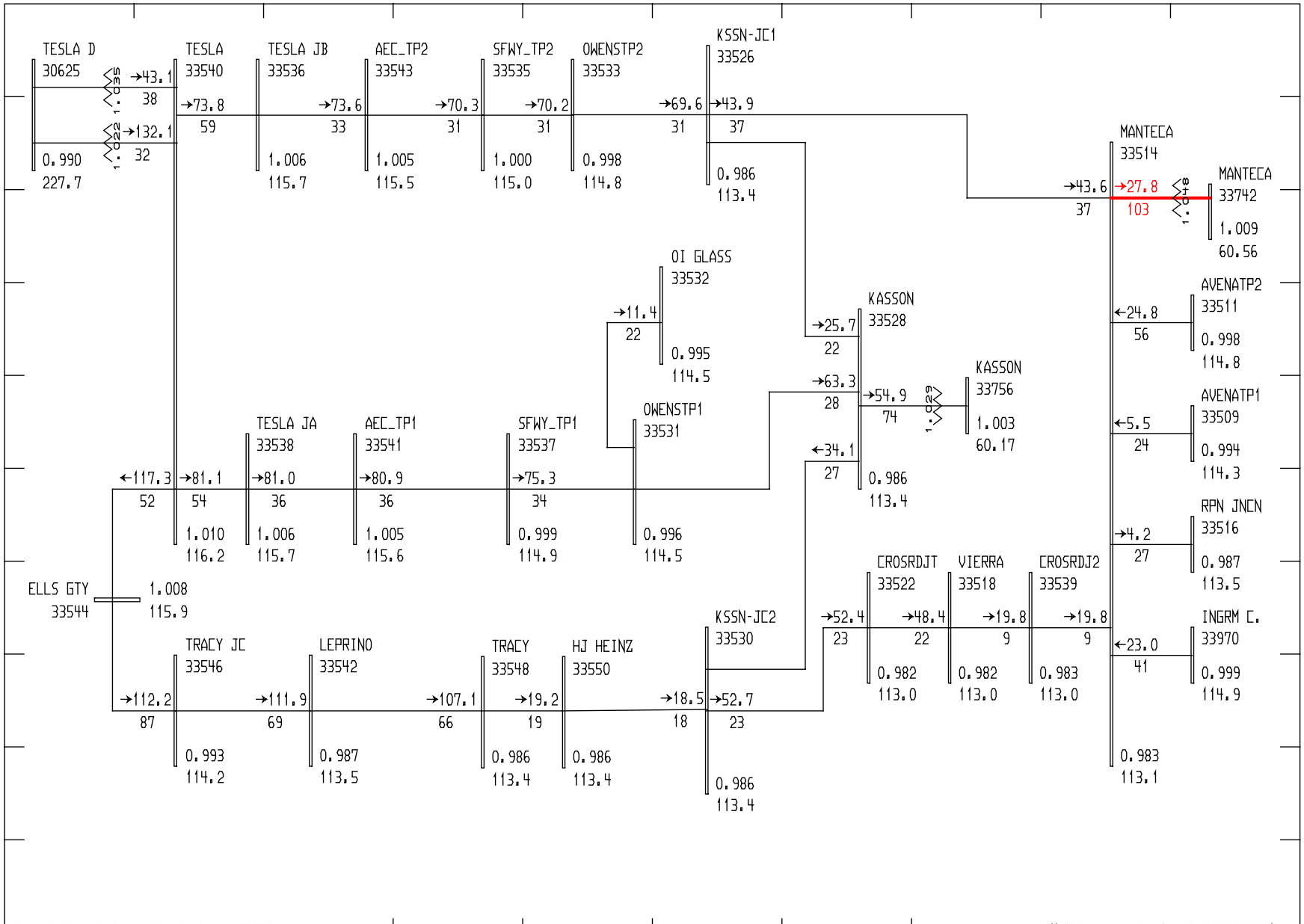

General Electric International, Inc. PSLF Program MW/Pct Tue Aug 28 08:43:37 2001

GENERAL ELECTRIC COMPANY

TRACY PEAKER - 115-KV INTERCONNECT PRE-PROJECT
2003SUMPK SYSTEM CASE: COI=4780MW (n2s), P26=2775MW (n2s)
1-IN-10 FORECAST; PG&E AREA LOADS/LOSSES=25,710 MW; 7/13/2001

TRACY PEAKER = 0 MW
MAX NEW 2003 GENERATION IN NORTHERN CALIFORNIA

gwf_tracy_pkr.drw
w:\HSS\03hs-115-base.sav
Rating = 1

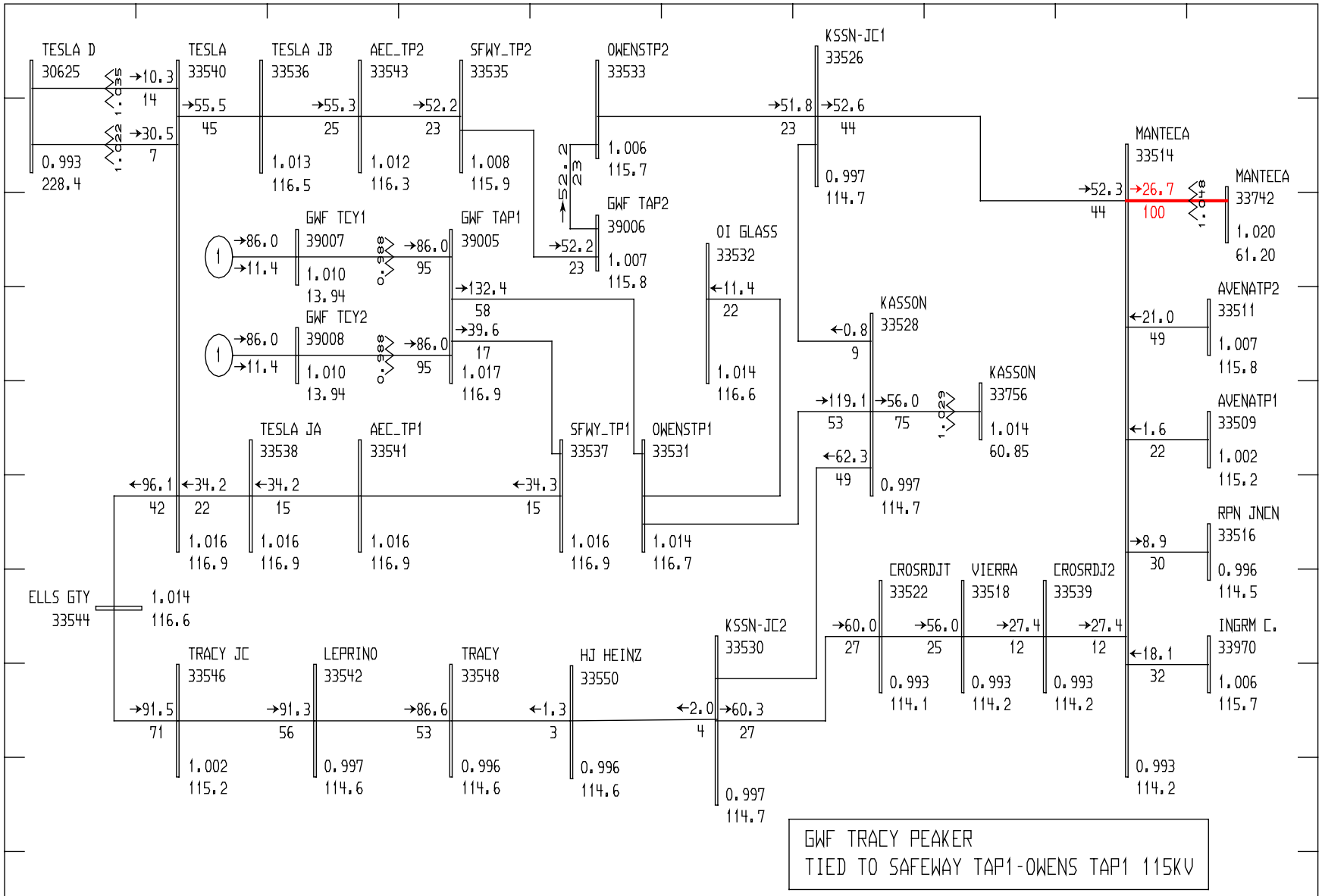

General Electric International, Inc. PSLF Program MW/Pct Tue Aug 28 08:44:25 2001

GENERAL ELECTRIC COMPANY

TRACY PEAKER - 115-KV INTER. POST-PROJECT SCENARIO 2a
2003SUMPK SYSTEM CASE: COI=4780MW (n2s), P26=2775MW (n2s)
1-IN-10 FORECAST; PG&E AREA LOADS/LOSSES=25,710 MW; 7/13/2001

TRACY PEAKER = 172 MW (2 UNITS ON TESLA-KASSON LINE)
MAX NEW 2003 GENERATION IN NO. CAL.

gwf_tracy_pkr_2a.drw
W:\HSS\03hs-115-2a.sav
Rating = 1

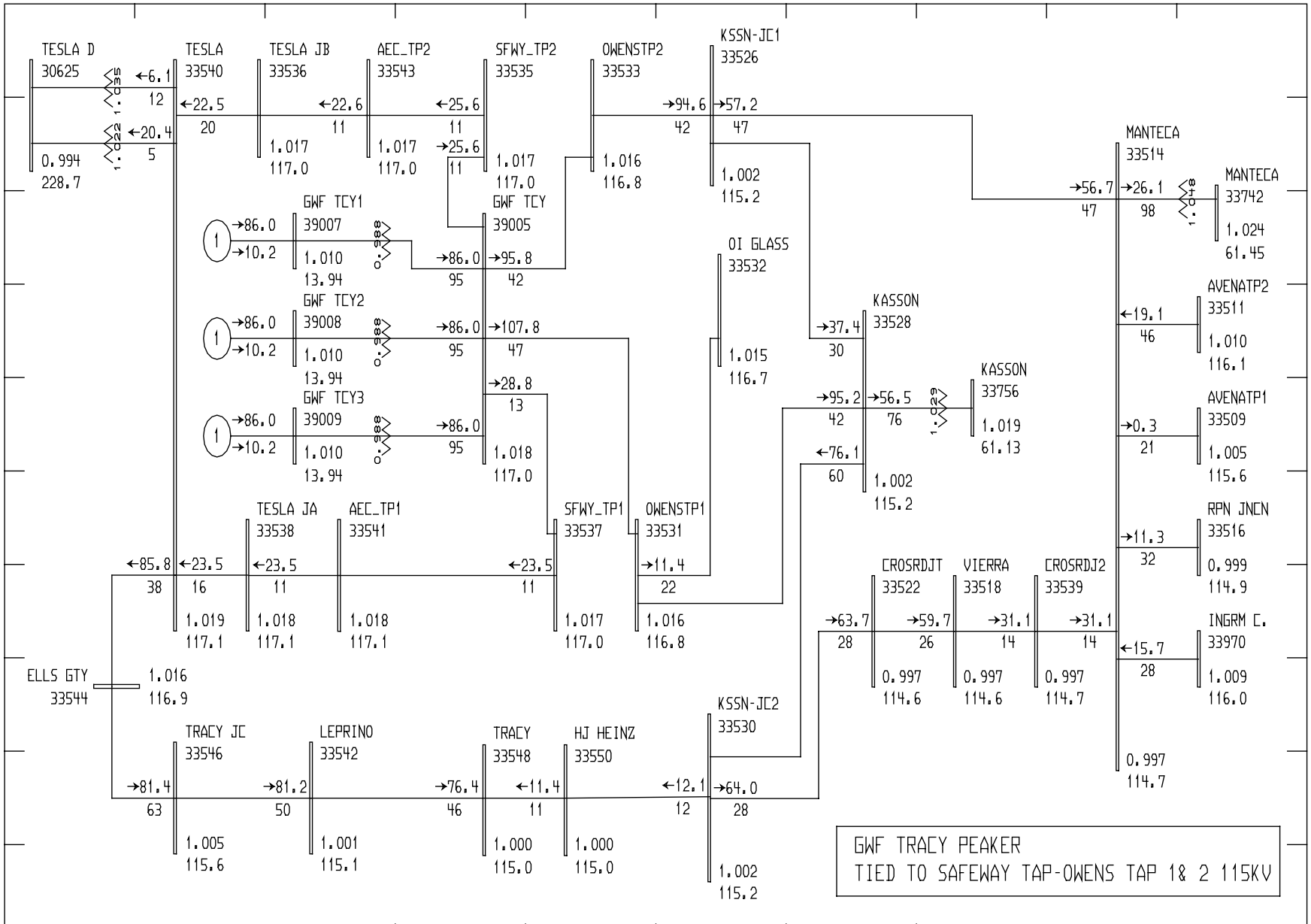

General Electric International, Inc. PSLF Program MW/Pct Tue Aug 28 08:45:05 2001

GENERAL ELECTRIC COMPANY

TRACY PEAKER - 115-KV INTER. POST-PROJECT SCENARIO 3b
2003SUMPK SYSTEM CASE: COI=4780MW (n2s), P26=2775MW (n2s)
1-IN-10 FORECAST; PG&E AREA LOADS/LOSSES=25,710 MW; 7/13/2001

TRACY PEAKER = 258 MW TIED TO NEW GWF SWITCHYARD
MAX NEW 2003 GENERATION IN NO. CAL.

gwf_tracy_pkr_3b.drw
w:\HSS\03hs-115-3b.sav
Rating = 1

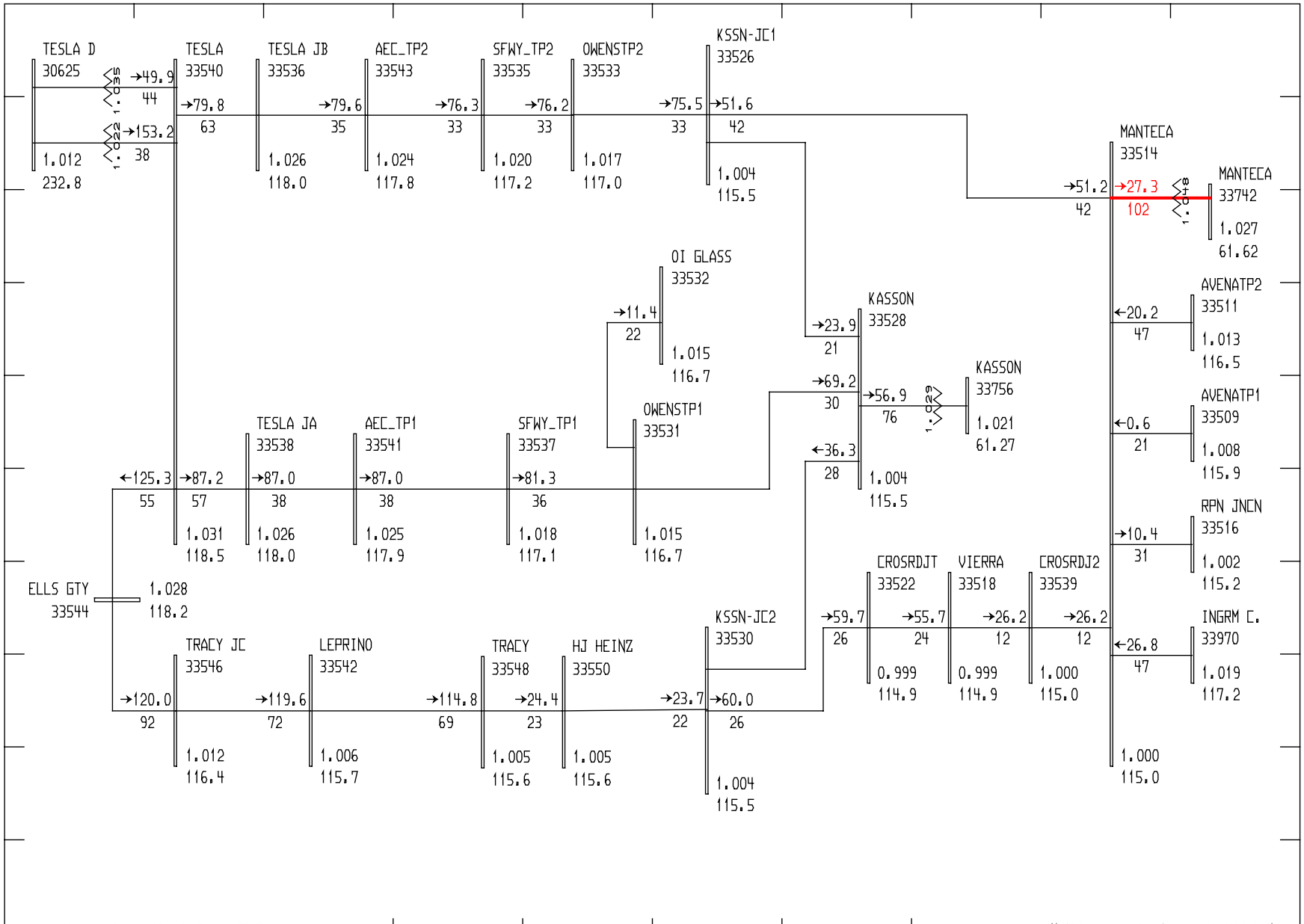

General Electric International, Inc. PSLF Program MW/Pct Tue Aug 28 08:46:00 2001

GENERAL ELECTRIC COMPANY

TRACY PEAKER - 115-KV INTERCONNECT PRE-PROJECT
2004 HS CASE (PG&E "04_a5_after_colusa.sav" - 4/26/01)
COI=3337, PATH 15=-1503, PATH 26=2830

TRACY PEAKER = 0 MW
MAX NEW GEN IN NORTHERN CALIFORNIA

gwf_tracy_pkr.drw
W:\HSS\04hs-115-base.sav
Rating = 1

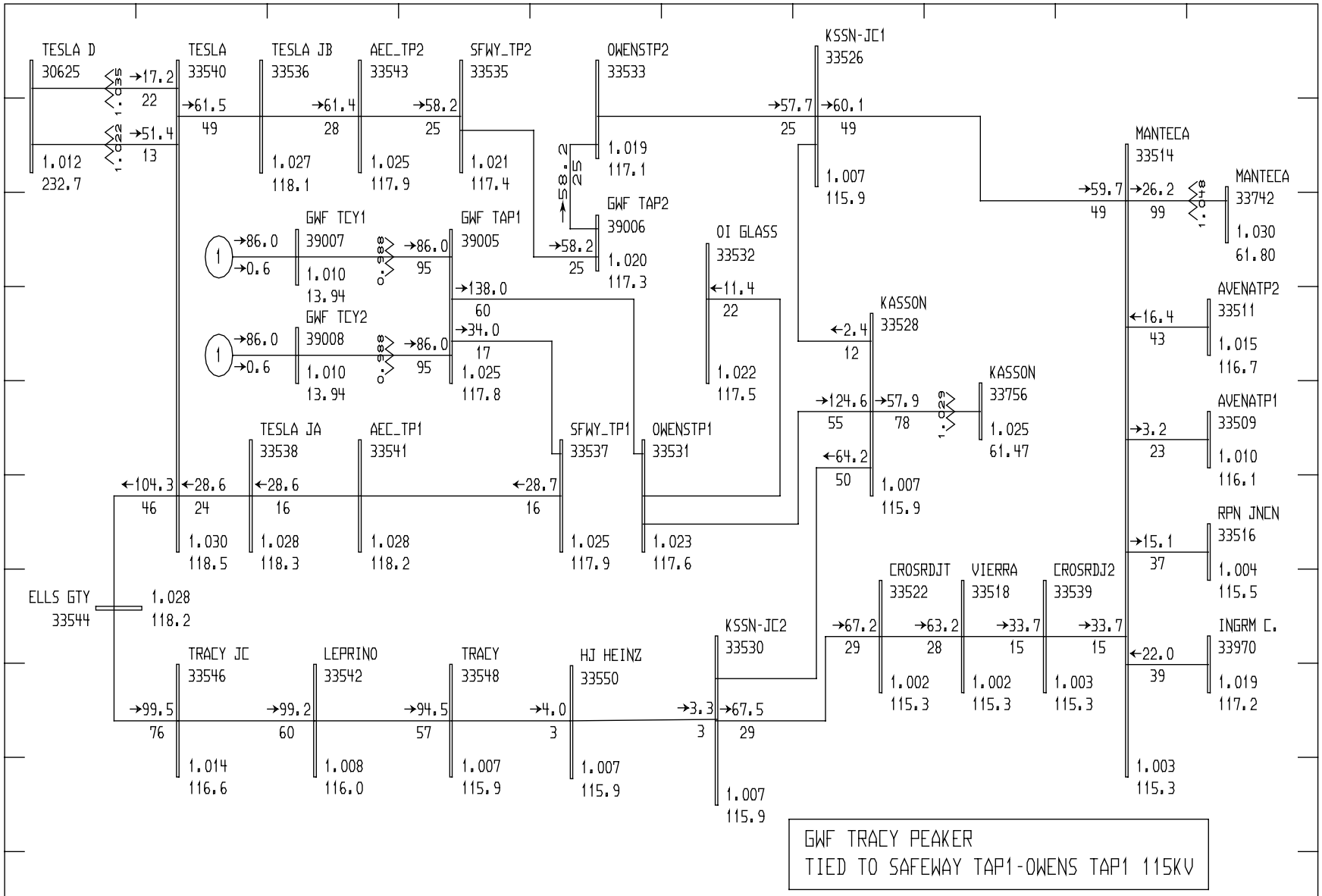

General Electric International, Inc. PSLF Program MW/Pct Tue Aug 28 08:46:39 2001

GENERAL ELECTRIC COMPANY

TRACY PEAKER - 115-KV INTERCONNECT SCENARIO 2a
2004 HS CASE (PG&E "04_a5_after_colusa.sav" - 4/26/01)
COI=3337, PATH 15=-1503, PATH 26=2830

TRACY PEAKER = 172 MW (2 UNITS ON TESLA-KASSON LINE)
MAX NEW GEN IN NORTHERN CALIFORNIA

gwf_tracy_pkr_2a.drw
W:\HSS\04hs-115-2a.sav
Rating = 1

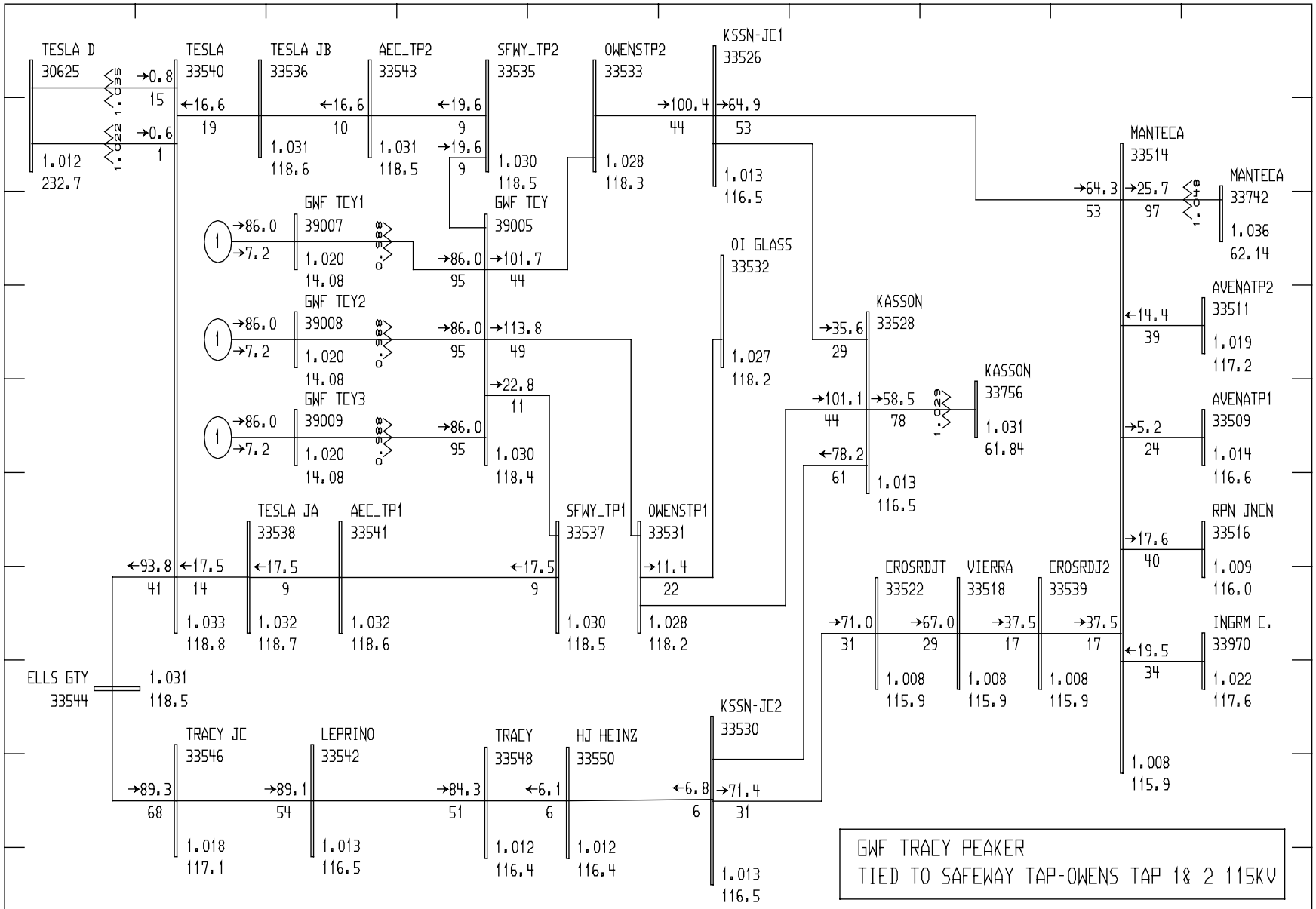

General Electric International, Inc. PSLF Program MW/Pct Tue Aug 28 08:47:21 2001

GENERAL ELECTRIC COMPANY

TRACY PEAKER - 115-KV INTERCONNECT SCENARIO 3b
2004 HS CASE (PG&E "04_a5_after_colusa.sav" - 4/26/01)
COI=3337, PATH 15=-1503, PATH 26=2830

TRACY PEAKER = 258 MW TIED TO GWF 115-KV STATION
MAX NEW GEN IN NORTHERN CALIFORNIA

gwf_tracy_pkr_3b.drw
W:\HSS\04hs-115-3b.sav
Rating = 1