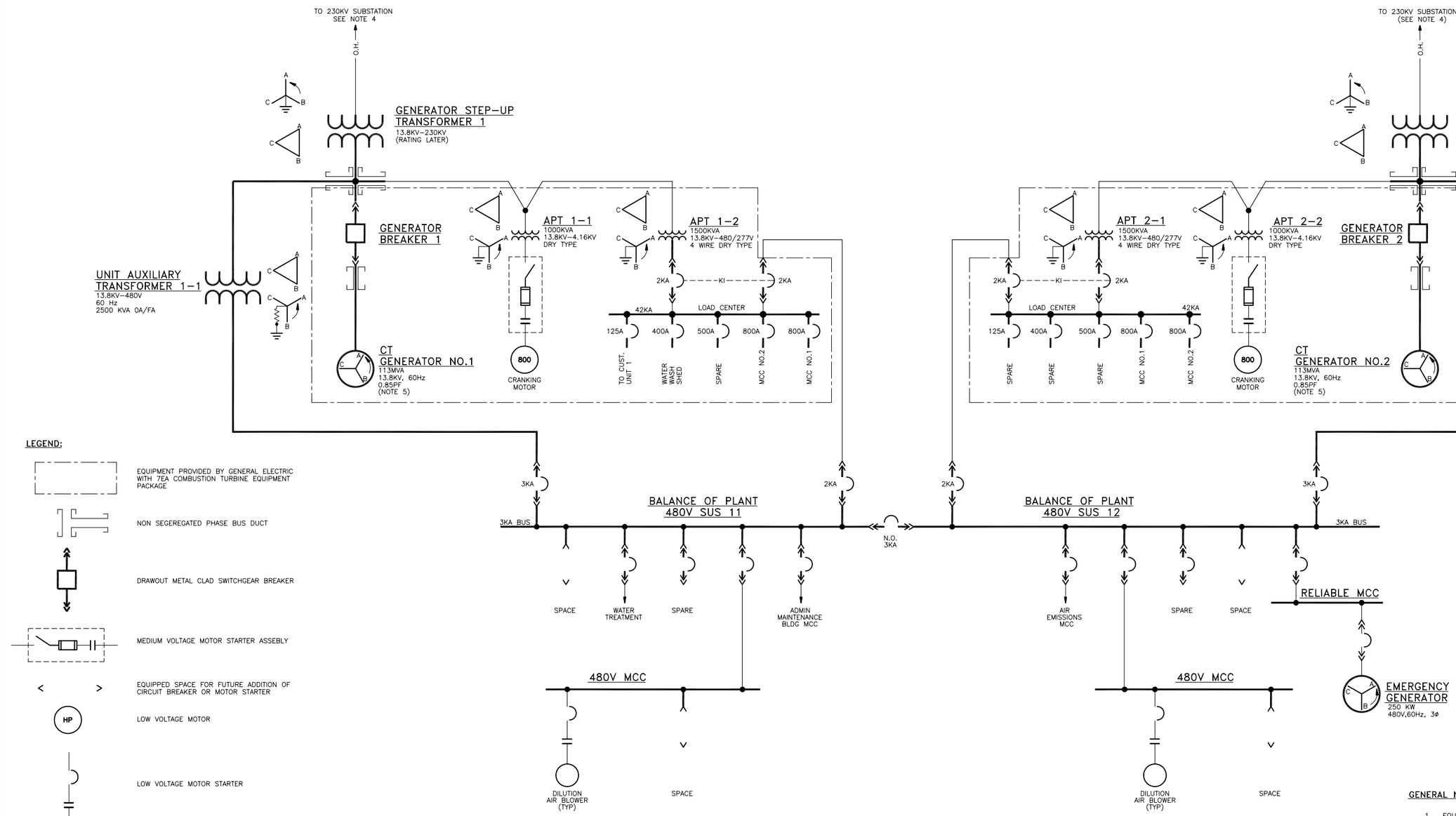

LEGEND:

	EQUIPMENT PROVIDED BY GENERAL ELECTRIC WITH 7EA COMBUSTION TURBINE EQUIPMENT PACKAGE
	NON SEGEREGATED PHASE BUS DUCT
	DRAWOUT METAL CLAD SWITCHGEAR BREAKER
	MEDIUM VOLTAGE MOTOR STARTER ASSEBLY
< >	EQUIPPED SPACE FOR FUTURE ADDITION OF CIRCUIT BREAKER OR MOTOR STARTER
HP	LOW VOLTAGE MOTOR
	LOW VOLTAGE MOTOR STARTER
	DISCONNECT SWITCH
	LOW VOLTAGE METAL ENCLOSED SWITCHGEAR BREAKER

BOP	BALANCE OF PLANT
N.O.	NORMALLY OPEN
RES	RESISTOR
HP	HORSEPOWER
APT	AUXILIARY POWER TRANSFORMER
KI	KEY INTERLOCK
OH	OVERHEAD LINE
MCC	MOTOR CONTROL CENTER

GENERAL NOTES:

1. EQUIPMENT INTERCONNECTION CONFIGURATION IS PRELIMINARY AND IS SUBJECT TO CHANGE DURING DETAIL DESIGN.
2. EQUIPMENT QUALITY AND RATINGS ARE PRELIMINARY AND SUBJECT TO CHANGE DURING DETAIL DESIGN.
3. THE NUMBER, SIZE AND NAMES OF INDIVIDUAL LOADS CONNECTED TO LV SWITCHGEAR, AND MCC'S INCLUDING REQUIREMENTS FOR SPARES, WILL BE DETERMINED DURING DETAIL DESIGN.
4. THE 230KV SUBSTATION HAS ADEQUATE PROVISIONS TO ACCEPT AND TERMINATE CIRCUITS FROM POWER GENERATION EQUIPMENT AS DEFINED ON THIS DRAWING. 230KV SUBSTATION PHASE SEQUENCING AND PEAKING ORDER WILL BE DETERMINED DURING DETAIL DESIGN.
5. CT GENERATOR BASE RATINGS SUBJECT TO CHANGE BASED UPON INSTALLATION SITE AMBIENT TEMPERATURE, ELEVATION AND OTHER DESIGN BASIS CONDITIONS. FOR ADDITIONAL INFORMATION, REFER TO GENERAL ELECTRIC SPECIFICATIONS FOR 7EA COMBUSTION TURBINE PACKAGE.

Project No. 51-00167032.00	GWF ENERGY LLC TRACY 230KV SWITCHYARD	ELECTRICAL ONE-LINE DIAGRAM	Figure 2-8
	URS		

J:\CADSHARED\GWF-DRAWINGS\FIG2-8.DWG 080101 14HALF.PCP