APPENDIX F

SYSTEM IMPACT STUDY

INLAND ENERGY INC,
VICTORVILLE 2 PROJECT

SYSTEM IMPACT STUDY

October 16, 2006

Prepared by
Phillip Leung

Southern California Edison Company

Approved by: Patricia L. Arons

EXECUTIVE SUMMARY

Southern California Edison Company ("SCE") under direction of the California Independent System Operator ("CAISO"), performed an Interconnection System Impact Study ("SIS") as requested by Inland Energy, Inc. for a proposed Victorville 2 ("VV2") project pursuant to the Interconnection System Impact Study Agreement. The VV2 project is a combine cycle and solar array heat input generating plant consist of two combustion turbines rated maximum 154.2 MW each, and one steam turbine rated maximum 268.3 MW. The plant auxiliary load is 14 MW and net output is 563 MW. The Project will interconnect to the SCE owned Victor 230-kV Substation and scheduled to be online by July, 2009. Inland Energy, Inc. was informed that a third Victor-Lugo 230-kV line will be required for VV2 project to interconnect to the CAISO controlled grid. Therefore a third Victor-Lugo 230-kV line is modeled in the base case.

The study was performed for two system conditions: a 2009 heavy summer one-in-ten load forecast and a 2010 light spring load forecast (65% of the heavy summer load).

The results of the System Impact Study will be used as the basis to determine project cost allocation for facility upgrades in the Facilities Study. ***The study accuracy and the results for the assessment of the system adequacy are contingent on the accuracy of the technical data provided by Inland Energy, Inc***. Any changes from the attached data could void the study results. The report provides detailed study assumptions and conditions of the system in which the study was conducted. Furthermore power flow contingencies, transient stability, post transient, and short-circuit duty assessments were completed for this study and summarized below.

Based on this analysis, existing SCE transmission facilities are not adequate to accommodate the VV2 project interconnecting at the SCE-owned Victor 230-kV substation for 2009 operation.

This revised system impact study included a sensitivity study to identify facility upgrade requirement if projects ahead in the queue and upgrades associated with these projects were not in service by 2009.

Power Flow Analysis

The study identified overloads on Victor-Lugo 230-kV lines No.1, No.2, under base case, N-1 and N-2 contingencies with addition of the VV2 project with and without any prior queue projects and associated system upgrades in service. Sensitivity study indicated that VV2 would trigger base case overloads on the Lugo 500/230-kV AA transformer banks No.1 and No.2 without the third Lugo 500/230-kV AA transformer bank. A third Victor-Lugo 230-kV line and a third Lugo 500/230-kV transformer bank have to be in service before VV2 project comes online.
A detail SPS study is also needed to determine if the existing High Desert SPS needs to be expanded to include VV2 project, under the outages of Victor-Lugo 230-kV No.3 and No.1 or No.2 lines.

Post-Transient Power Flow Analysis

The simultaneous outage of Kramer-Lugo 230-kV Line No.1 and No.2 (N-2) caused post transient voltage violations in the North of Lugo area. However, the post transient voltage violations would disappeared if the third Kramer-Lugo 230-kV line which triggered by prior queue projects were in-service. If those prior projects withdraw from the queue, the existing Kramer SPS will have to be revised in order to maintain the post transient voltage level.

Transient Stability Analysis

The simultaneous outage of Kramer-Lugo 230-kV Lines No.1 and No.2 (N-2) caused transient instability throughout the North of Lugo area. However, the transient instability would disappear if the third Kramer-Lugo 230-kV line which triggered by prior queue projects were in-service. If those prior projects withdraw from the queue, the existing Kramer SPS will have to be revised in order to maintain a stable system.

Short-Circuit Analysis

In three-phase-to-ground and single-line-to-ground CB evaluation, the VV2 project did not trigger any circuit breakers upgrade. All replacement/upgrade circuit breakers were identified by generation projects ahead in the queue. Studies indicated that 68 SCE owned circuit breakers require replacement and 13 SCE owned circuit breakers require upgrades. It is estimated that circuit breaker replacement/upgrades will yield a total cost of $52.627 million.

Cost Responsibility

VV2 project triggers the need of one reliability upgrade - a third Victor-Lugo 230-kV line. All other identified upgrades are triggered by projects ahead in the queue. The ***Nonbinding*** estimate for VV2 project's ***maximum cost exposure**** for reliability upgrades is $124.327 million. Refer to the Scope of Work section of this report for work details and cost information.

If all projects ahead in the queue come on-line as scheduled, VV2 project would only be responsible for the cost of constructing the 230-kV gen-tie line from VV2 plant to Victor 230-kV substation, and the third Lugo-Victor 230-kV line. The ***Nonbinding minimum cost*** for VV2 project to interconnect to CAISO's grid is $23.7 million. However, a restudy must be performed to re-determine cost assignment if any projects ahead in the application queue withdraw.

The maximum exposure and minimum cost do not include direct assignment cost of the 230-kV gen-tie line from VV2 project to Victor substation and switchyard at VV2 project plant site.

* The maximum cost exposure is the potential cost that may be assignable to VV2 project should any higher queue project withdraw.

CONTENTS

INTRODUCTION.....1
STUDY CONDITIONS AND ASSUMPTIONS.....2
A. Planning Criteria..... 2

B. Victorville 2 Project..... 6
Figure 1. One-line Victorville 2 ("VV2") Project bus Configuration (without the third Victor-Lugo 230-kV line)......7
Figure 2. One-line Diagram of the Existing Victor/Kramer System......7

C. Kramer Remedial Action Scheme..... 8

D. High Desert Power Project Remedial Action Scheme..... 8

E. Bishop Remedial Action Scheme..... 9

F. System Conditions..... 9

G. Load Flow Study..... 10
Table 1. Summary of case attributes......10

H. Post-Transient Governor Power Flow Study..... 11

I. Transient Stability Study..... 11

J. Short Circuit Duty Study..... 11

STUDY RESULTS.....12
A. Load Flow Study..... 12

B. Transient Stability and Post Transient Study..... 15

C. Short Circuit Duty Study..... 16

FACILITIES STUDY.....20
SCOPE OF WORK.....21

CONTENTS

Appendix A - Load Flow Plots

2009 Heavy Summer –Base Case with and without Project
1 - 2009 HS Without VV2 project
2 - 2009 HS With VV2 project

2009 Heavy Summer –Base Case with Project and third Lugo AA transformer bank
3 - 2009 HS With VV2 project and AA bank
2010 Light Spring – Base Case with and without Project
4 - 2010 LSpr Without VV2 project
5 - 2010 LSpr With VV2 project

2010 Light Spring –Base Case with Project and third Lugo AA transformer bank
6 – 2010 LSpr With VV2 project and AA bank
Appendix B – Complete list of Power Flow Results

Appendix C – List of Power Flow Contingencies

Appendix D – 2010 Light Spring Transient Stability Plots

Appendix E – VV2 Project Attachment A

Appendix F – SCE Project Queue in the North of Lugo area

INLAND ENERGY INC,
VICTORVILLE 2 PROJECT

SYSTEM IMPACT STUDY
(REVISED)

October 16, 2006

INTRODUCTION

Southern California Edison Company ("SCE") under direction of the California Independent System Operator ("CAISO"), performed an Interconnection System Impact Study ("SIS") as requested by Inland Energy, Inc. for a proposed Victorville 2 ("VV2") project pursuant to the Interconnection System Impact Study Agreement. The VV2 project is a combine cycle and solar array heat input generating plant consist of two combustion turbines rated maximum 154.2 MW each, and one steam turbine rated maximum 268.3 MW. The plant auxiliary load is 14 MW and net output is 563 MW. The Project will interconnect to the SCE owned Victor 230-kV Substation and scheduled to be online by July, 2009. Inland Energy, Inc. was informed that a third Victor-Lugo 230-kV line will be required for VV2 project to interconnect to the CAISO controlled grid. Therefore a third Victor-Lugo 230-kV line is modeled in the base case.

The results of the System Impact Study will be used as the basis to determine project cost allocation for facility upgrades in the Facilities Study. ***The study accuracy and the results for the assessment of the system adequacy are contingent on the accuracy of the technical data provided by Inland Energy, Inc***. Any changes from the attached data could void the study results.

This revised system impact study supersedes the original SIS issued on August 30, 2006, because a sensitivity study has to be added to identify facility upgrade requirement if projects ahead in the queue and upgrades associated with these projects were not in service by 2009.

The study was performed for two system conditions: a 2009 heavy summer one-in-ten load forecast and a 2010 light spring load forecast (65% of the heavy summer load).

The report provides detailed study assumptions and conditions of the system in which the study was conducted. Furthermore power flow contingencies for the SCE 115, 230-kV system, post-transient governor power flow, transient stability for significant 115, 230-kV contingencies, and short-circuit duty assessments were completed for this study.

STUDY CONDITIONS AND ASSUMPTIONS

A. Planning Criteria

The study was conducted by applying the CAISO Reliability Criteria. More specifically, the main criteria applicable to this study are as follows:

Power Flow Assessment

The following contingencies are considered for transmission and sub-transmission lines and 500/230 kV transformer banks ("AA-Banks"):

- Single Contingencies (loss of one line or one AA-Bank)
- Credible Double Contingencies (loss of two lines or one line and one AA-Bank) (Outages of two AA-Banks are beyond the Planning Criteria)

The following reliability criteria are used:

Transmission Lines	Base Case	Limiting Component Normal Rating
	N-1	Limiting Component Emergency-Rating
	N-2	Limiting Component Emergency-Rating
AA-Banks	Base Case	Normal Loading Rating
	Long Term & Short Term	Bank Emergency-Rating

System upgrades for transmission lines are generally recommended for all reliability criteria violations. Special Protection Schemes (SPS) may be allowed for single contingency and credible double contingencies reliability criteria violation in place of system upgrade.

Congestion Assessment

The following principles were used in determining whether congestion management, special protection schemes, or facility upgrades are required to mitigate base case, single contingency, or double contingency overloads:

- Congestion management, as a means to mitigate base case overloads, can be used if it is determined to be manageable and the CAISO concurs with the implementation.

- Facility upgrades will be required if it is determined that the use of congestion management is unmanageable as defined in the congestion management section that follows.

- SPS, in lieu of facility upgrades, will be recommended if the scheme is effective, does not jeopardize system integrity, does not exceed the current CAISO single and double contingency tripping limitations, does not adversely effect existing or proposed special protection schemes in the area, and can be readily implemented.

- Facility upgrades will be required if use of protection schemes is determined to be ineffective, the amount of tripping exceeds the current CAISO single and double contingency tripping limitations, adverse impacts are identified on existing or currently proposed special protection schemes, or the scheme cannot be readily implemented.

- Congestion management in preparation for the next contingency will be required, with CAISO concurrence, if no facility upgrades or special protection schemes are implemented.

The following study method was implemented to assess the extent of possible congestion:

a) Under Base Case with all transmission facilities in service, the system was evaluated with all existing interconnected generation and all generation requests in the area that have a queue position ahead of this request (pre-project).

b) Under Base Case with all transmission facilities in service, the system was reevaluated with the inclusion of the VV2 project and a third Victor-Lugo 230-kV line (post-project).

If the normal loading limits of facilities are exceeded in (a), the overload is identified as an existing overload that was triggered by a project in queue ahead of the VV2 project. If the normal loading limits of facilities are exceeded in (b) and were not exceeded in (a), the overload is identified as triggered by the addition of the VV2 project. The VV2 project, assuming it is a market participant, and other market participants in the area may be subjected to congestion management, potential upgrade cost and/or participation of any proposed special protection scheme if the project addition aggravates or triggers the overload. Additionally, the VV2 project may have to participate in mitigation of overloads triggered by subsequent projects in queue, subject to FERC protocols and policies.

In order for congestion management to be a feasible alternative to system facilities, all of the following factors need to be satisfied:

- Time requirements for necessary coordination and communication between the CAISO operators, scheduling operators and SCE operators.

- Distinct Path/Corridor rating should be well defined so monitoring and detecting congestion and implementing congestion of the contributing generation resources can be performed when limits are exceeded.

- Sufficient amount of market generation in either side of the congested path/corridor should be available to eliminate market power.

- Manageable generation in the affected area is necessary so that operators can implement congestion management if required (i.e. the dispatch schedule is known and controllable).

Results of these studies should identify:

a. if capacity is available to accommodate the proposed VV2 project and all projects ahead in queue without the need for congestion management, special protection schemes, or facility upgrades

b. if overloads exist in the area after the addition of all projects in queue ahead of the VV2 project and all facilities in service

c. if congestion exists in the area with the addition of the VV2 project and all projects ahead in queue under single and double element outage conditions assuming no new special protection schemes are in place

d. if sufficient capacity is maintained to accommodate all Must-Run and Regulatory Must-Take generation resources with all facilities in service

e. if sufficient capacity is maintained to accommodate the total output of any one generation resource which is not classified as Must-Run.

Transient Stability Analysis

WECC currently is in the process of adopting The Generator Electrical Grid Fault Ride-Through Capability Criteria. SCE currently supports a Low Voltage Ride-Through Criteria to ensure continued reliable service. A proposed Criteria that SCE supports, is as follows:

1. Generator is to remain in-service during system faults (three phase faults with normal clearing and single-line-to-ground with delayed clearing) unless clearing the fault effectively disconnects the generator from the system.

2. During the transient period, generator is required to remain in-service for the low voltage and frequency excursions specified in WECC Table W-1 (provided below) as applied to load bus constraint. These performance criteria are applied to the generator interconnection point, not the generator terminals.

3. Generators may be tripped after the fault period if this action is intended as part of a special protection scheme.

4. This Standard will not apply to individual units or to a site where the sum of the installed capabilities of all machines is less than 10 MVA, unless it can be proven that reliability concerns exist.

5. The performance criteria of this Standard may be satisfied with performance of the generators or by installing equipment to satisfy the performance criteria.

6. The performance criterion of this Standard applies to any generation independent of the interconnected voltage level.

7. No exemption from this Standard will be given because of minor impact to the interconnected system.

8. Existing generators that go through any refurbishments or any replacements are then required to meet this Standard.

In addition to the Low Voltage Ride-Through Criteria, the following criterion was applied for the transient stability analysis:

a.) All machines in the system shall remain in synchronism as demonstrated by their relative rotor angles.

b.) All stability simulation cases will be run for a minimum of 10 seconds.

c.) Generators with a base load flag of zero will not respond to contingencies.

d.) System stability is evaluated based on the damping of the relative rotor angles and the damping of the voltage magnitude swings.

Other transient voltage dips must meet the following CAISO Reliability Criteria:

Performance Level	Disturbance	Transient Voltage Dip Criteria
B	N-1	Transient Voltage Dip: Not to exceed 25% at load buses or 30% at non-load buses. Also, not to exceed 20% for more than 20 cycles at load buses. Minimum Transient Frequency: Not below 59.6 Hz for 6 cycles or more at a load bus.
C	N-2	Transient Voltage Dip: Not to exceed 30% at any bus. Also, not to exceed 20% for more than 40 cycles at load buses. Minimum Transient Frequency: Not below 59.0 Hz for 6 cycles or more at a load bus.
D	N-3	Not Specified

Short-Circuit Analysis

The following study assumptions were used for conducting the short-circuit analysis:

a) Shunt capacitor banks will be omitted at all stations. Normally, shunt capacitors produce a minimal effect on fault currents. When they are large enough to be significant, their effect is to reduce total fault current. Results are more conservative to neglect them altogether.

b) Shunt reactors will also be neglected since their contribution is minimal.

c) Reactors connected to autotransformer delta tertiary windings will be neglected since they cannot contribute fault current to the system.

d) Phase shifting transformers will be by-passed as this would be the worst case from the fault current standpoint.

e) If zero sequence data is not available, the assumption will be made that Xo=3X1 and Ro=0 or R1.

Circuit breakers exposed to fault currents in excess of 100 percent of their interrupting capacities will be replaced or upgraded, whichever is appropriate.

Sub-synchronous Resonance Analysis (SSR)

It is not anticipated that there will be any SSR impacts. Hence, the SSR studies are not required.

B. Victorville 2 Project

The project is scheduled to be in service by July 2009.

Proposed Victorville 2 Project ("VV2")

Interconnection of the VV2 project will be achieved with construction of a new 10 miles single circuit from VV2 plant site to Victor substation. The first 3 miles of this circuit will be hung on newly constructed transmission towers. The rest of the 7 miles circuit will be hung on the Caldwell-Victor 230-kV double circuit towers. Unless otherwise agreed to by SCE, such line will be constructed by Inland Energy, Inc. The project will have a gross output of 577 MW, plant auxiliary load of 14 MW and a net project output of 563 MW.

- A third Victor-Lugo 230-kV line was assumed to be in-service for all post-project cases. VV2 project can not operate without this line. See table below for the Victor-Lugo 230-kV lines No.1 and No.2 loading pre and post VV2 project without the third Victor-Lugo 230-kV line.

	2009 Heavy Summer		**2010 Light Spring**	
	Pre-Project Loading	**Post-Project Loading**	**Pre-Project Loading**	**Post-Project Loading**
Victor-Lugo 230-kV line No.1	1017Amps/82%	1764Amps/142%	1185Amps/95%	1911Amps/154%
Victor-Lugo 230-kV line No.2	1017Amps/82%	1764Amps/142%	1185Amps/95%	1911Amps/154%

Figure 1 illustrates the conceptual one-line schematic of the proposed VV2 project and **Figure 2** illustrates the one line diagram of the Victor/Kramer System.

Figure 1. One-line Victorville 2 ("VV2") Project bus Configuration (without the third Victor-Lugo 230-kV line).

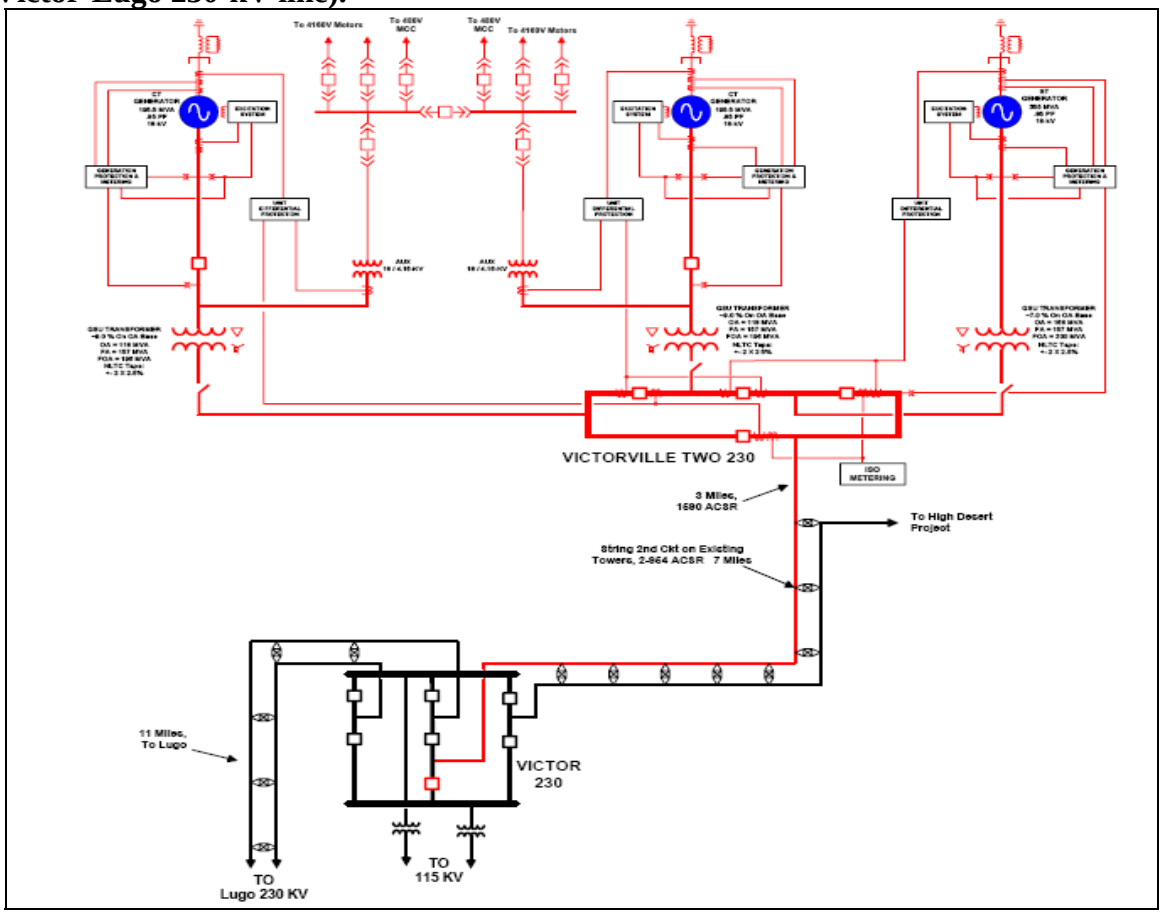

Figure 2. One-line Diagram of the Existing Victor/Kramer System.

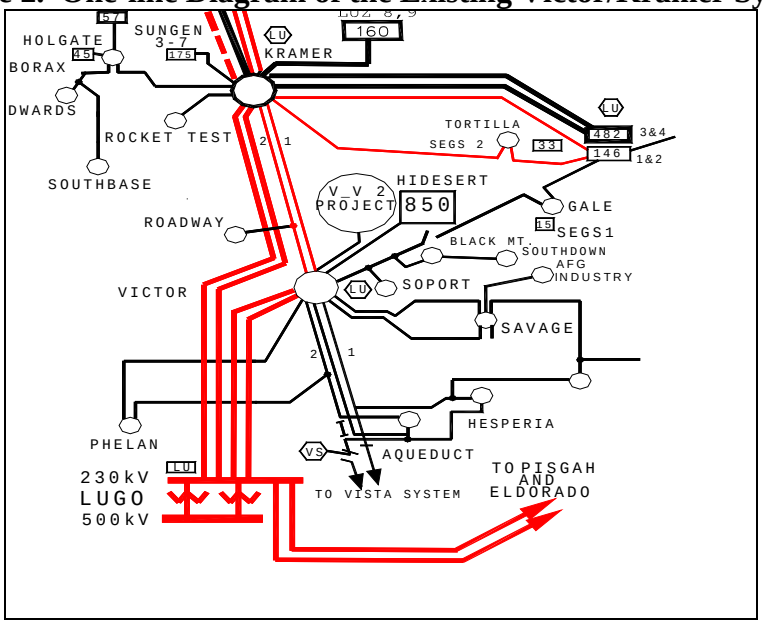

Interconnection Points:

Two interconnection points have been identified for connecting the VV2 project. The preferred point is Victor 230-kV bus (Primary). The alternate point of interconnection is Caldwell 230-kV bus. SCE and Inland Energy, Inc. do not anticipate needing the alternate interconnection point and it was not studied in the System Impact Study (SIS).

C. Kramer Remedial Action Scheme

The Kramer Remedial Action Scheme is designed to prevent transmission line or transformer bank overloads as well as system instability. These problems could occur during high generation conditions under certain transmission component outages. The following outlines the outages that can result in the potential operation of the Kramer RAS:

Single Outages

1. Loss of Kramer-Inyokern-Randsburg No.1 115-kV Line
2. Loss of Kramer-Lugo No.1 230-kV Transmission Line
3. Loss of Kramer-Lugo No.2 230-kV Transmission Line

Double Outages

1. Loss of Kramer-Lugo No.1 and No.2 230-kV Transmission Lines
2. Loss of Lugo 500/230-kV No.1 and No.2 Transformer Banks (Safety Net)

In addition to tripping generation under outage conditions, SCE System Operating Bulletin No.209 allows for curtailment of generation in the Inyokern Area when the 115-kV portion of the Remedial Action Scheme is inoperative. SCE System Operating Bulletin No.209 also allows for curtailment of generation in the Kramer area when the 230-kV portion of the Remedial Action Scheme is inoperative.

Arming of the 115-kV Kramer RAS portion is based on Kramer-Inyokern-Randsburg No.3 115-kV line flow while arming of the 230-kV Kramer RAS portion is based on Kramer-Lugo No.1 and No.2 230-kV line flows. The “Safety Net” is armed based on the sum flows of the two Lugo AA-Banks. Adding generation north of Lugo may result in changes to existing line flows and may adversely affect the current arming levels.

D. High Desert Power Project Remedial Action Scheme

The High Desert Power Project (HDPP) Remedial Action Scheme is designed to prevent transmission line or transformer bank overloads as well as system instability. These problems could occur during high generation conditions under certain transmission component outages. The following outlines the outages that can result in the potential operation of the HDPP RAS:

Single Outages

1. Loss of Lugo-Victor No.1 230-kV Transmission Line
2. Loss of Lugo-Victor No.2 230-kV Transmission Line
3. Loss of Lugo 500/230 No.1 Transformer Bank (AA-Bank)
4. Loss of Lugo 500/230 No.2 Transformer Bank (AA-Bank)

Double Outages

A. Loss of Lugo-Victor No.1 and No.2 230 kV Transmission Lines
B. Loss of Lugo 500/230-kV No.1 and No.2 Transformer Banks ("Safety Net")

In addition to tripping generation under outage conditions, SCE System Operating Bulletin No.283 allows for curtailment of generation in the Victor Area when the Remedial Action System is inoperative.

Arming of the HDPP RAS is based on Lugo-Victor No.1 and No.2 230-kV line flows as well as Lugo AA-Bank flows. The "Safety Net" is armed based on the sum flows of the two Lugo AA-Banks. Adding generation north of Lugo may result in changes to existing line flows and may adversely affect the current arming levels.

E. Bishop Remedial Action Scheme

The Bishop Remedial Action Scheme is designed to prevent system instability in the Bishop area by tripping local generation for the loss of both the Control-Haiwee-Inyokern No.1 and No.2 115-kV lines or for the loss of a single Control-Haiwee-Inyokern 115-kV line when the SCE/LADWP Inyo 230-kV Intertie is opened.

In addition to tripping local generation under outage condition, SCE System Operating Bulletin No.214 allows for curtailment of generation in the Bishop Area to minimize flows on the Inyo phase-shift transformer or to eliminate overloads.

The Bishop RAS arming is based on Control-Haiwee-Inyokern No.1 and No.2 115-kV line flows. Adding generation in the area may result in changes to existing line flows and may adversely affect the current arming levels.

F. System Conditions

To simulate the SCE transmission system for analysis, the study used a SCE internal planning case that modeled 2009 heavy summer. In addition, an additional SCE internal planning case modeled 2010 light spring conditions. Both starting base cases were updated to represent system conditions in 2009 and 2010. Most significantly, SCE's 2009 heavy summer load was escalated to a one-in-ten load forecast. System generation is based upon the application queue. That is, all projects ahead in SCE's queue regardless of the in-service date of such prior projects are modeled. The 2010 light spring scenario assumes 65% of the heavy summer load.

G. Load Flow Study

Load flow studies were conducted under 2009 heavy summer and 2010 light spring conditions. Refer to **Appendix F** for a list of SCE Queue projects in the North of Lugo area modeled in all base cases. Further descriptions of each base case follow:

a). 2009 Heavy Summer without the VV2 project, Case 1.

Case 1 includes a 2009 heavy summer load level. Generation patterns were maximized in the North of Lugo area to fully stress the Victor/Kramer system.

b). 2009 Heavy Summer with the VV2 Project, Case 2.

Case 2 modified to include the VV2 project with a net generation of 563 MW. The generation connected at Alamitos generation was reduced by 563 MW to accommodate project generation.

c). 2010 Light Spring without the VV2 project, Case 3.

Case 3 includes a 2010 light spring load level. Generation patterns were maximized in the North of Lugo area to fully stress the Victor/Kramer system.

d). 2010 Light Spring with the VV2 project, Case 4.

Case 4 modified to include the VV2 project with a net generation of 563 MW. The generation connected at Alamitos generation was reduced by 563 MW to accommodate project generation.

Table 1 summarizes SCE area system demand and resources for both the 2009 heavy summer and 2010 light spring cases.

Table 1. Summary of case attributes.

SOUTHERN CALIFORNIA IMPORT TRANSMISSION ("SCIT"), EAST-OF-RIVER ("EOR") AND WEST-OF-RIVER ("WOR") FLOWS SCE AREA TOTAL GENERATION, IMPORT, LOAD AND LOSSES (MW)				
	2009 Heavy Summer		**2010 Light Spring**	
	Case 1 Pre-project	Case 2 Post-Project	Case 3 Pre-Project	Case 4 Post-Project
SCIT	15,545	16,815	13,320	13,279
EOR	6,402	6,407	7,418	7,421
WOR	7,760	7,757	7,965	7,960
Generation*	16,787	16,815	10,679	10,708
Import	-9,590	-9,590	-6,434	6,434
Load	25,027	25,027	16,497	16,497
Losses	724	752	617	646

*Changes in generation can be attributed to swing bus adjustments compensating for loss increases.

H. Post-Transient Governor Power Flow Study

Most critical 115, 230-kV contingencies were simulated with the post-transient governor power flow methodology. The governor power flow methodology utilizes Special Protection Systems ("SPS") for loss of bulk system contingencies. In addition, loss of a significant amount of generation would be spread throughout the system instead of at the system swing bus.

I. Transient Stability Study

Transient stability studies were performed for 2010 light load base cases to ensure that the transmission system remains in operating equilibrium through abnormal operating conditions after the new facility begins operation.

J. Short Circuit Duty Study

Short circuit studies were conducted to determine fault duties on existing SCE facilities before and after proposed project additions. Fault duty results were used to identify overstressed equipment, if any, that results solely from addition of the proposed facility.

STUDY RESULTS

A. Load Flow Study

I. *2009 Heavy Summer(without proposed upgrades from prior queue projects)*

1. Base Case

Affected Elements	*Normal/ Emergency Ratings*	*Pre-Project Loading*	*Post-Project Loading*	*Impact/ Percentage*	*Contingency Description*
ELDORDO 230/115-kV BANK No.1	102/110*	114	117	3/3%	Base system (n-0)
LUGO 500/230-kV BANK No. 1	1120/1230*	1243	1514	271/22%	Base system (n-0)
LUGO 500/230-kV BANK No. 2	1120/1230*	1252	1525	273/22%	Base system (n-0)
ELDORADO-MOUNTAIN PASS 115-kV LINE No.1	415/530**	541	559	18/3%	Base system (n-0)

* MVA
** Amps

2. N-1 Contingency

Without existing SPS, VV2 project increased the loading on the following facilities. See the complete N-1 overloads table in Appendix A.

- Eldorado 230/115-kV Bank No.1 by 4 MVA/4% to a maximum of 134 MVA.
- Lugo 500/230-kV Bank No.1 by 287 MVA/23% to a maximum of 1572 MVA.
- Lugo 500/230-kV Bank No.2 by 290 MVA/24% to a maximum of 1583 MVA.
- Eldorado-Mountain Pass 115-kV Line No.1 by 20 Amps/4% to a maximum of 640 Amps.
- Inyo 115-kV Phase Shifter by 3 MVA/5% to a maximum of 73 MVA.

3. N-2 Contingency

Without existing SPS, VV2 project increased the loading on the following facilities. See the complete N-2 overloads table in Appendix B.

- Eldorado 230/115-kV Bank No.1 by 4 MVA/3% to a maximum of 131 MVA.
- Lugo 500/230-kV Bank No.1 by 287 MVA/23% to a maximum of 1572 MVA.
- Lugo 500/230-kV Bank No.2 by 293 MVA/24% to a maximum of 1596 MVA.
- Eldorado-Mountain Pass 115-kV Line No.1 by 20 Amps/4% to a maximum of 640 Amps.
- Inyo 115-kV Phase Shifter would not converge without existing Bishop SPS.

Appendix B tabulates all power flow contingency results.

The study focused on identifying system thermal overloads within the SCE service territory. Reported thermal overloads were limited to the condition where a modeled transmission component was loaded over 98% of its appropriate normal rating (as entered in the power flow database). In addition, only element loadings greater than 1% between the pre and post-project cases were reported.

II. *2010 Light Spring (without proposed upgrades from prior queue projects)*

1. Base Case

Affected Elements	*Normal/ Emergency Ratings*	*Pre-Project Loading*	*Post-Project Loading*	*Impact/ Percentage*	*Contingency Description*
ELDORDO 230/115-kV BANK No.1	102/110*	124	127	3/3%	Base system (n-0)
LUGO 500/230-kV BANK No. 1	1120/1230*	1337	1603	266/22%	Base system (n-0)
LUGO 500/230-kV BANK No. 2	1120/1230*	1347	1614	267/22%	Base system (n-0)
INYO 115-KV PHASE SHIFTER	56/62*	80	83	3/5%	Base system (n-0)
ELDORADO-MOUNTAIN PASS 115-kV LINE No.1	415/530**	587	602	15/3%	Base system (n-0)

* MVA
** Amps

2. N-1 Contingency

Without existing SPS, VV2 project increased the loading on the following facilities. See the complete N-1 overloads table in **Appendix B**.

- Eldorado 230/115-kV Bank No.1 by 8 MVA/7% to a maximum of 144 MVA.
- Lugo 500/230-kV Bank No.1 by 623 MVA/51% to a maximum of 3214 MVA.
- Lugo 500/230-kV Bank No.2 by 621 MVA/50% to a maximum of 3212 MVA.
- Eldorado-Mountain Pass 115-kV Line No.1 by 43 Amps/8% to a maximum of 689 Amps.
- Inyo 115-kV Phase Shifter by 2 MVA/3% to a maximum of 110 MVA.

3. N-2 Contingency

Without existing SPS, VV2 project increased the loading on the following facilities. See the complete N-2 overloads table in **Appendix B**.

- Eldorado 230/115-kV Bank No.1 by 3 MVA/3% to a maximum of 141 MVA.
- Lugo 500/230-kV Bank No.1 by 279 MVA/23% to a maximum of 1669 MVA.
- Lugo 500/230-kV Bank No.2 by 281 MVA/23% to a maximum of 1681 MVA.
- Eldorado-Mountain Pass 115-kV Line No.1 by 20 Amps/4% to a maximum of 640 Amps.
- Inyo 115-kV Phase Shifter by 4 MVA/6% to a maximum of 97 MVA.

Appendix B tabulates all power flow contingency results.

The study focused on identifying system thermal overloads within the SCE service territory. Reported thermal overloads were limited to the condition where a modeled transmission component was loaded over 98% of its appropriate normal rating (as entered in the power flow database). In addition, only element loadings greater than 1% between the pre and post-project cases were reported.

III. ***2009 Heavy Summer (with proposed system upgrades from prior queue projects)***

1. Base Case

No base case overloads were found.

2. N-1 Contingency

No N-1 overloads were found with existing RAS deployed.

3. N-2 Contingency

No N-2 overloads were found with existing RAS deployed. But a detail SPS study will be needed in the Facility Study to determine if the existing High Desert SPS needs to be expanded to include VV2 project, under the outages of Victor-Lugo 230-kV No.3 and No.1 or No.2 lines.

IV. ***2010 Light Spring (with proposed system upgrades from prior queue projects)***

1. Base Case

No base case overloads were found.

2. N-1 Contingency

No N-1 overloads were found with existing RAS deployed.

3. N-2 Contingency

No N-2 overloads were found with existing RAS deployed. But a detail SPS study will be needed in the Facility Study to determine if the existing High Desert SPS needs to be expanded to include VV2 project, under the outages of Victor-Lugo 230-kV No.3 and No.1 or No.2 lines.

V. **Sensitivity Study**

With all proposed upgrades identified in the prior queue projects in service, VV2 project would only required a third 230-kV line from Victor sub to Lugo sub. A sensitivity study was performed to determine what other transmission facilities may be required if all projects ahead in the queue withdraw and system upgrades are not in service. Below are the study results.

2009 Heavy Summer

1. Base Case

Lugo 500/230-kV Bank No.1 and No.2 were overloaded to 1121/101%.

2. N-1 Contingency

Lugo 500/230-kV Bank No.1 or No.2 was overloaded to 2217/189% with the outage of Lugo 500/230-kV Bank No.2 or No.1 without deploying existing RAS

3. N-2 Contingency

No N-2 overloads were found. But a detail SPS study will be needed in the Facility Study to determine if the existing High Desert SPS needs to be expanded to include VV2 project, under the outages of Victor-Lugo 230-kV No.3 and No.1 or No.2 lines.

2010 Light Spring

4. Base Case

Lugo 500/230-kV Bank No.1 and No.2 were overloaded to 1434/128%.

5. N-1 Contingency

Lugo 500/230-kV Bank No.1 or No.2 was overloaded to 2691/240% with the outage of Lugo 500/230-kV Bank No.2 or No.1 without deploying existing RAS

6. N-2 Contingency

No N-2 overloads were found. But a detail SPS study will be needed in the Facility Study to determine if the existing High Desert SPS needs to be expanded to include VV2 project, under the outages of Victor-Lugo 230-kV No.3 and No.1 or No.2 lines.

B. Transient Stability and Post Transient Study

The simultaneous outage of Kramer-Lugo 230-kV Lines No.1 and No.2 (N-2) caused transient and post transient voltage violation throughout the North of Lugo area by only deploying the existing Kramer SPS. However, these violation would disappear if the third Kramer-Lugo 230-kV line which triggered by prior queue projects was in-service. If the prior projects withdraw from the queue, the existing Kramer SPS will have to be revised in order to maintain system stability and the post transient voltage level
.
Refer to **Appendix D** for all simulated contingency plots. A detail SPS study will be needed in the Facility Study phase to determine the appropriate generator, its arming level and tripping details for the Kramer-Lugo 230-kV Lines No.1 and No.2 simultaneous outage.

The VV2 project met the Low Voltage Ride-Through criterion; since, none of the VV2 project generators tripped due to the adverse contingencies that were simulated. Phase-to-ground faults were not simulated in this SIS since previously studied projects that had a larger output did not reveal any problems.

Summary of Post Transient Voltage Deviations.

Outages	Bus	Voltage Deviation
Lugo 500/230-kV Bank STO	No bus exceed more than 5%	
Lugo 500/230-kV Bank DTO	No bus exceed more than 10%	
Victor-Lugo 230-kV lines SLO	No bus exceed more than 5%	
Victor-Lugo 230-kV lines DLO	No bus exceed more than 10%	
Control-Inyokern 115-kV lines DLO	BSPHYD26 2.2	6.4%
	CONTROL 55.0	5.5%
	OXBOW B 230.0	-5.8%
Kramer-Inyokern-Randsburg 115-kV SLO	No bus exceed more than 5%	
Kramer-Lugo 230-kV line SLO	No bus exceed more than 5%	
Kramer-Lugo 230-kV lines DLO (Modified existing Kramer SPS by tripping additional generator)	No bus exceed more than 10%	
Kramer-Lugo 230-kV lines DLO (Without modifying existing Kramer SPS	AFG IND	13.50%
	APPLEVAL 115.0	13.6%
	AQUEDUCT 115.0	13.4%
	COTNWD 115.0	13.9%
	HESPERIA 115.0	13.5%
	PHELAN 115.0	13.3%
	PLEUSS 115.0	13.6%
	ROADWAY 115.0	16.8%
	SAVAGE 115.0	13.5%
	SOPPORT 115.0	12.2%
	TAP601 115.0	16.8%
	TAP602 115.0	12.2%
	TAP603 115.0	10.1%
	TAP604 115.0	13.6%
	TAP605 115.0	13.6%
	TAP606 115.0	13.5%
	TAP607 115.0	13.4%
	TAP608 115.0	13.3%
	TAP709 115.0	5.6%
	VICTOR 115.0	13.2%
	PERMANTE 115.0	14%
	GOLDHILS 115.0	13.9%

C. Short Circuit Duty Study

In three-phase-to-ground and single-line-to-ground CB evaluation, the VV2 project did not trigger any circuit breakers upgrade. All replacement/upgrade circuit breakers were identified by generation projects ahead in the queue. Studies indicated that 68 SCE owned circuit breakers require replacement and 13 SCE owned circuit breakers require upgrades. It is estimated that circuit breaker replacement/upgrades will yield a total cost of $52.627 million.

Summary of Short-Circuit Duties, 3-Phase-to-Ground.

			PRE CASE		POST CASE		
Bus No.	Bus Name	Bus KV	X/R	KA	X/R	KA	DELTA KA
34066	ELDORADO	500	19.8	43	19.8	43.1	0.1
34128	LUGO	500	22	47.3	22.1	48.1	0.8
34146	MIRALOMA	500	24.8	36.6	24.8	36.8	0.2
34192	SERRANO	500	25.7	31.2	25.7	31.3	0.1
34210	VINCENT	500	18.5	41.1	18.5	41.3	0.2
34039	CHINO	230	17	49.8	17	49.9	0.1
34078	ETIWANDA	230	25.5	60.2	25.6	60.3	0.1
34213	JURUPA	230	12.9	24.8	12.9	24.9	0.1
34114	KRAMER	230	15.5	19.9	15.3	20.1	0.2
34127	LUGO	230	31.2	46.9	29.9	49.5	2.6
34143	MESA CAL	230	19.7	66.8	19.7	66.9	0.1
34147	MRLOMA E	230	23.3	64.4	23.3	64.6	0.2
34148	MRLOMA W	230	20.1	51.9	20.1	52	0.1
34167	PARDEE	230	17.6	55.9	17.6	56	0.1
34801	R VISTA	230	25.8	60.2	25.8	60.4	0.2
34191	SERRANO	230	25.8	53.7	25.8	53.8	0.1
34201	SYLMAR S	230	19.5	58.8	19.5	58.9	0.1
34207	VICTOR	230	15	25.7	16.6	30	4.3
34208	VILLA PK	230	22.7	46.8	22.7	46.9	0.1
34212	VISTA	230	19.3	49.5	19.3	49.6	0.1
34113	KRAMER	115	15	22.2	15	22.4	0.2
34866	SOPPORT	115	2.6	8.1	2.6	8.2	0.1
34864	TAP602	115	2.6	8.2	2.6	8.3	0.1
34206	VICTOR	115	15.2	18.2	16.2	18.8	0.6

Summary of Short-Circuit Duties, Single-Line-to-Ground.

			PRE CASE		POST CASE		
Bus No.	Bus Name	Bus KV	X/R	KA	X/R	KA	DELTA KA
142	Lugo	525	13.2	39.7	13.2	40.1	0.4
156	Mira Loma	525	14	32.5	13.9	32.6	0.1
388	Eldorado	230	16	54.6	16	54.7	0.1
396	Etiwanda	230	17	56.2	17	56.3	0.1
478	Lugo	230	26.4	49.4	25.4	51.4	2
498	Mesa	230	18.1	64.4	18.1	64.5	0.1
508	Mira Loma A	230	13.1	54.3	13.1	54.4	0.1
509	Mira Loma B	230	12.2	61.5	12.2	61.6	0.1
548	Pisgah	230	28.4	28.6	28.4	28.7	0.1
582	Serrano	230	18.6	55.3	18.6	55.4	0.1
603	Sylmar (SCE)	230	12.7	64.4	12.7	64.5	0.1
616	Victor	230	11.7	21.7	13	26.2	4.5

CONCLUSIONS

A. Power Flow Analysis

A third Victor-Lugo 230-kV line was assumed in-service in all post project cases. VV2 project would not be able to operate without this line.

2009 Heavy Summer and 2010 Light Spring *without* system upgrades proposed by prior queue projects under Base Case, N-1 and N-2 Conditions:

Existing SCE facilities are not adequate to accommodate the VV2 project interconnecting at the SCE owned Victor 230 kV Substation for 2009 and 2010 operation. VV2 project will aggravate overloads to Lugo 500/230-kV transformer No.1 and No.2, Eldorado 230/115-kV transformer, Inyo 115-kV phase shifter, and Eldorado-Mountain Pass 115-kV line.

2009 Heavy Summer and 2010 Light Spring *with* system upgrades proposed by prior queue projects under Base Case, N-1 and N-2 Conditions:

With all system upgrades proposed by prior queue projects in service, no overloads were identified.

Sensitivity Study in 2009 Heavy Summer and 2010 Light Spring conditions under Base Case, N-1, N-2 conditions:

Without projects ahead in the application queue and system upgrades associated with these projects in service, Victor-Lugo 230-kV lines No.1, No.2, Lugo 500/230-kV transformer banks No.1 and No.2 were overloaded in base case and N-1 conditions. A third Victor-Lugo 230-kV line and a third Lugo 500/230-kV transformer bank will be needed before VV2 project comes in service. A detail SPS study will also be needed in the Facility Study to determine if the existing High Desert SPS needs to be expanded to include VV2 project, under the outages of Victor-Lugo 230-kV No.3 and No.1 or No.2 lines.

B. Short-Circuit Analysis

In three-phase-to-ground and single-line-to-ground CB evaluation, the VV2 project did not trigger any circuit breakers upgrade. All replacement/upgrade circuit breakers were identified by generation projects ahead in the queue. Studies indicated that 68 SCE owned circuit breakers require replacement and 13 SCE owned circuit breakers require upgrades. It is estimated that circuit breaker replacement/upgrades will yield a total cost of $52.627 million.

C. Transient and Post Transient

The simultaneous outage of Kramer-Lugo 230-kV Lines No.1 and No.2 (N-2) caused transient and post transient voltage violation throughout the North of Lugo area by only

deploying the existing Kramer SPS. However, these violation would disappear if a third Kramer-Lugo 230-kV line which triggered by prior queue projects was in-service. If the prior projects withdraw from the queue, the existing Kramer SPS will have to be revised in order to maintain system stability and post transient voltage level.

FACILITIES STUDY

1. Develop cost and detail to modify the existing Kramer SPS in case of prior projects in the application queue withdraw.

2. Develop the detail cost for SCE system and direct assignment facilities that are required to interconnect the VV2 project.

    - Construct a third Victor-Lugo 230-kV line and ROW acquisition
    - Construct RTU, relay protection, metering and communication equipment

3. Perform a detail study to develop cost and generation arming level if the existing High Desert SPS needs to be expanded to include VV2 project, under the outages of Victor-Lugo 230-kV No.3 and No.1 or No.2 lines.

SCOPE OF WORK

Substation Components

Victor Sub

- Equip existing 230-kV position #2 as a double breaker position. $2.7 million.
- Relocate Victor-Lugo 230-kV line No.1 from pos. 3 to pos. 2S. $0.5 million.
- Terminate new 230-kV gen-tie at existing pos. 3N. $0.5 million.

Lugo Sub

- Add a third Lugo 500/230-kV transformer bank and protective equipment. $48 million.

ORDER of MAGNITUDE" SUBSTATION COST: $51,700,000

Transmission Components

- Construct a third line from Victor 230-kV bus to Lugo 230-kV bus, including terminal equipment at both Victor and Lugo substations. $20 million.

ORDER of MAGNITUDE" TRANSMISSION COST: $20,000,000

Note: Corporate real estate cost was not included in this "order of magnitude" estimate.

Circuit Breaker Upgrade/Replacement for three-phase-to-ground and single-line-to-ground SCD results

TRANSMISSION SYSTEM

CASE A - Triggered by Victorville 2 Project

All Circuit Breakers adequate - No replacements or upgrades required

CASE B - Triggered by earlier Projects ahead of Victorville 2 in Application Queue and aggravated by the Project

STATION	System	Replace	Upgrade	Sets of TRV's required	Cost of CB	Cost of TRV set of 3	Sub-Total CB	Sub-Total TRV	GRAND TOTAL
Etiwanda	220kV	24			$ 629,000		$ 15,096,000	$ -	**$ 15,096,000**
Lugo	220kV	3	2	2	$ 476,000	$ 144,000	$ 1,428,000	$ 288,000	**$ 1,716,000**
Mesa	220kV	23			$ 629,000		$ 14,467,000	$ -	**$ 14,467,000**
Mira Loma	220kV	12			$ 629,000		$ 7,548,000	$ -	**$ 7,548,000**
Mira Loma	500kV	2			$ 1,948,000		$ 3,896,000	$ -	**$ 3,896,000**
Pardee	220kV		7	9		$ 144,000	$ -	$ 1,296,000	**$ 1,296,000**
Vincent	500kV	4	4	4	$ 1,948,000	$ 204,000	$ 7,792,000	$ 816,000	**$ 8,608,000**
		68	**13**	**15**			**$ 50,227,000**	**$ 2,400,000**	**$ 52,627,000**

NOTES:
All costs in 2008 Dollars
ITCC Tax not included
Costs of upgrading the Etiwanda, Mesa and Mira Loma 220kV Switchyards to 83kA is not included

Notes: All cost estimates are rough order of magnitude, and are non binding cost estimates.

The transmission schedule would be the controlling element of the Project. All other elements would be well within the 30-Month time frame shown below.

APPENDIX A

LOAD FLOW PLOTS

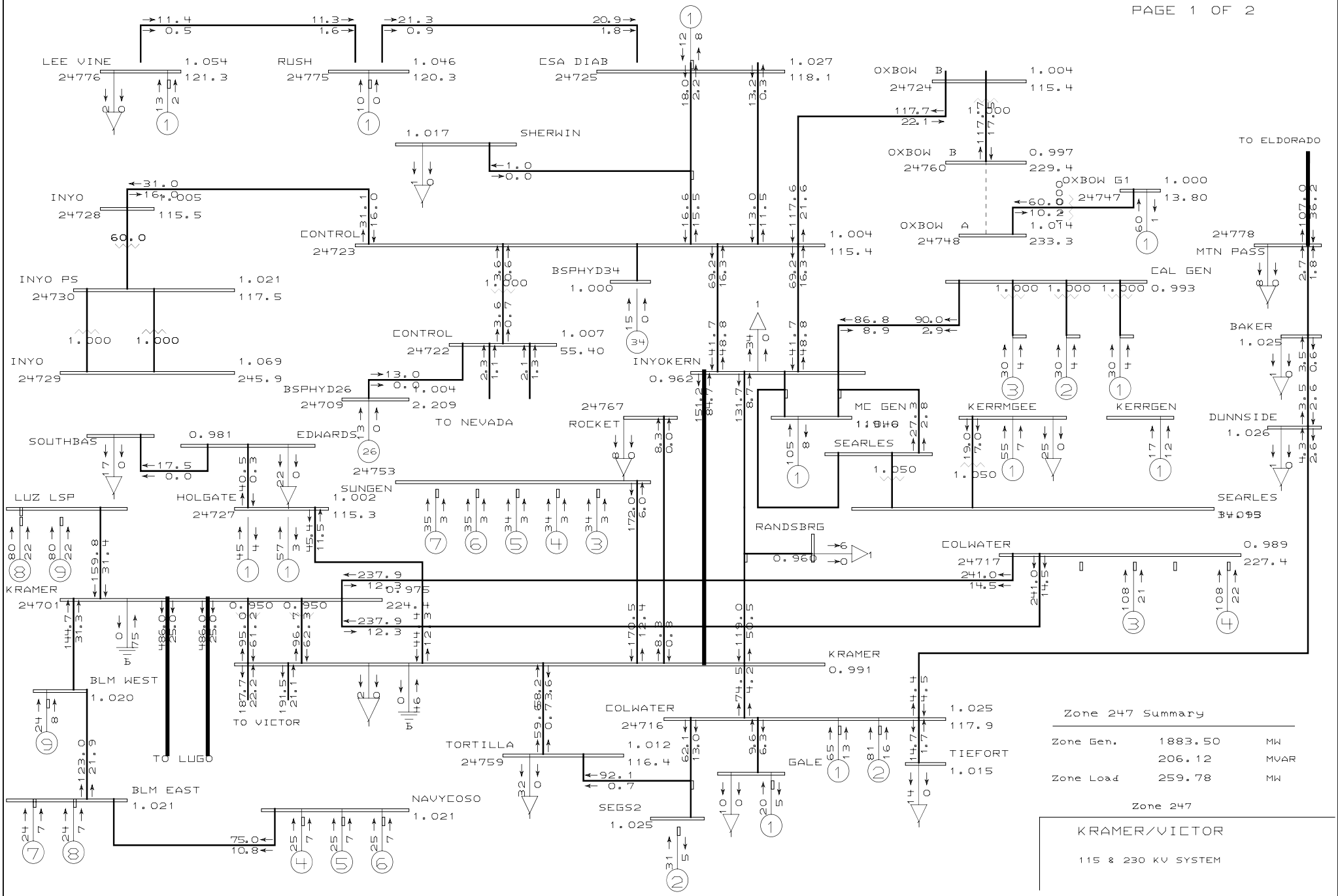

Zone 247 Summary

Zone Gen.	1883.50	MW
	206.12	MVAR
Zone Load	259.78	MW

Zone 247

KRAMER/VICTOR

115 & 230 KV SYSTEM

victorville2\vv-2-2009hs-pre.sav MW/MVAR Mon Oct 16 09:52:09 2006

VICTORVILLE 2 PROJECT STUDIES

CASE NAME:2009 HEAVY SUMMER PRE-VV2 PROJECT

WITH PRIOR QUEUE PROJECTS, NO IDENTIFIED SYSTEM UPGRADES IN SERVICE

PSLF Program

sce-kramerlso.drw

Rating = 1

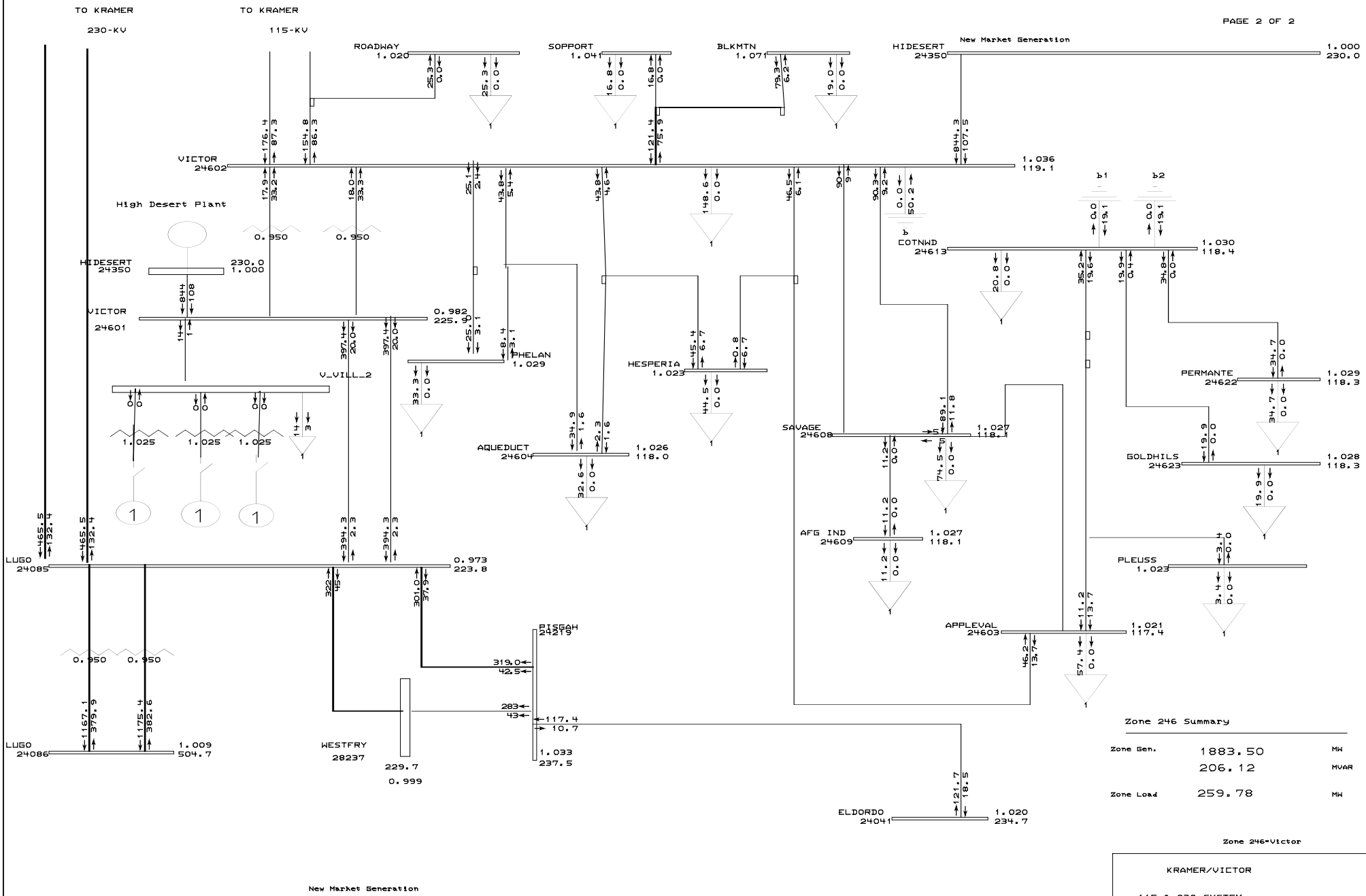

Zone 246 Summary

Zone Gen.	1883.50	MW
	206.12	MVAR
Zone Load	259.78	MW

Zone 246-Victor

KRAMER/VICTOR

115 & 230 SYSTEM

VICTORVILLE 2 PROJECT STUDIES

CASE NAME:2009 HEAVY SUMMER PRE-VV2 PROJECT

WITH PRIOR QUEUE PROJECTS, NO IDENTIFIED SYSTEM UPGRADES IN SERVICE

PSLF Program

sce-victor-2009.d:

Rating = 1

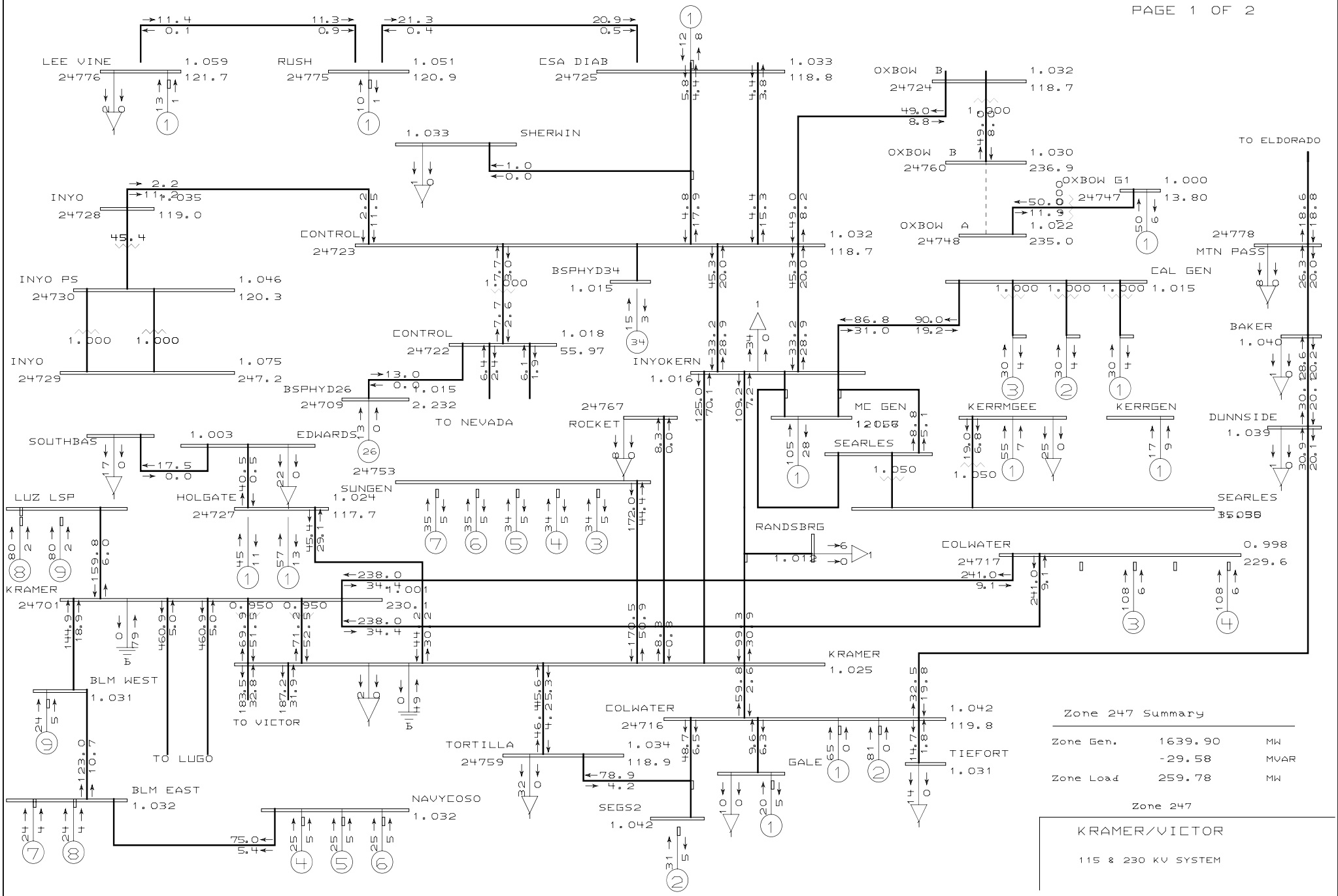

Zone 247 Summary

Zone Gen.	1639.90	MW
	-29.58	MVAR
Zone Load	259.78	MW

Zone 247

KRAMER/VICTOR

115 & 230 KV SYSTEM

victorville2\prevv-2-2009hs-wopp-upgrades.sav MW/MVAR Mon Oct 16 12:51:33 2006

VICTORVILLE 3 PROJECT STUDIES

CASE NAME: 2009 HEAVY SUMMER PRE-VV2 PROJECT (N-0)

WITHOUT PRIOR QUEUE PROJECTS, AND IDENTIFIED SYSTEM UPGRADES IN SERVICE

PSLF Program

sce-kramerlso.drw

Rating = 1

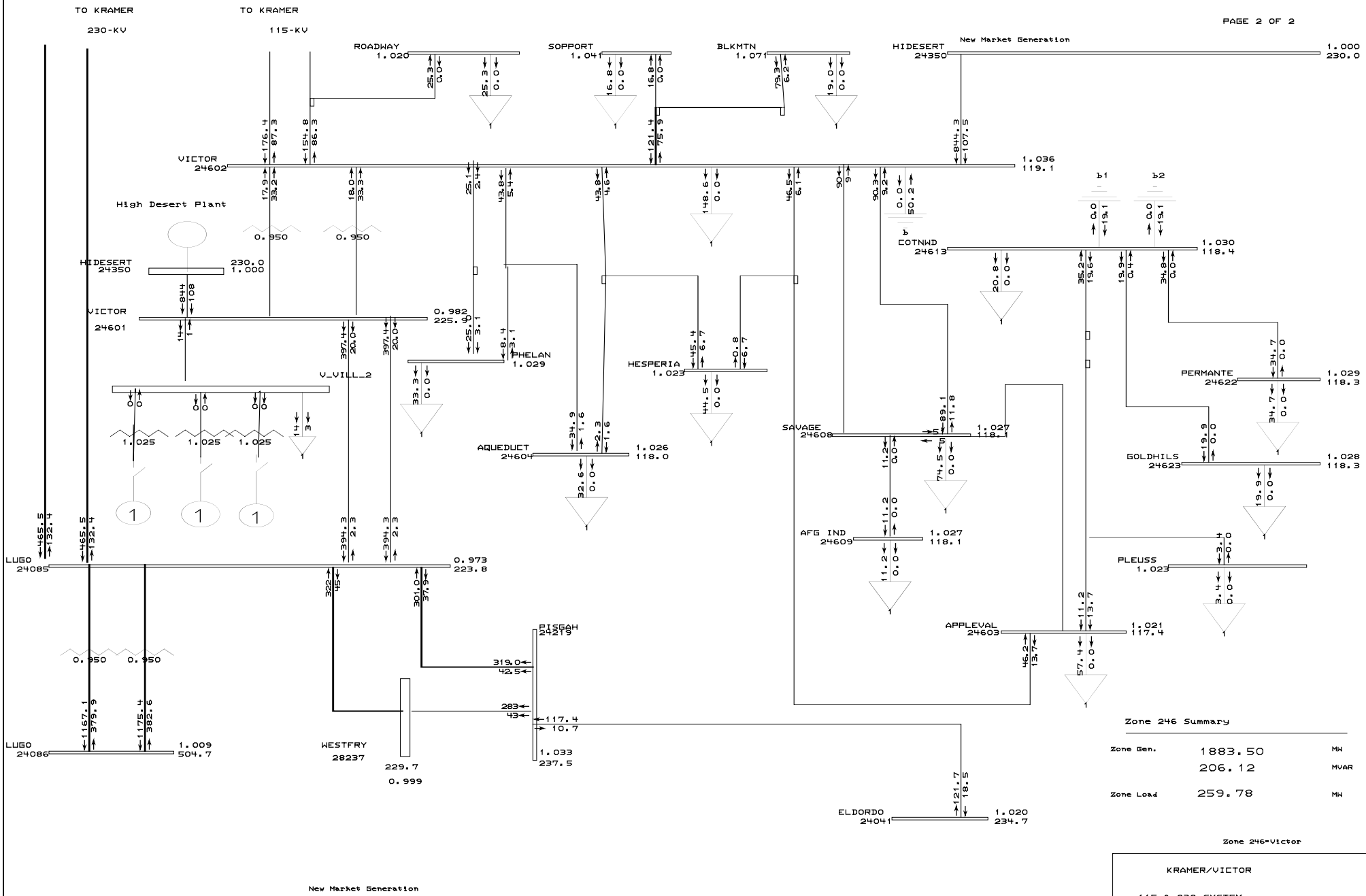

Zone 246 Summary

Zone Gen.	1883.50	MW
	206.12	MVAR
Zone Load	259.78	MW

Zone 246-Victor

KRAMER/VICTOR

115 & 230 SYSTEM

VICTORVILLE 2 PROJECT STUDIES

CASE NAME:2009 HEAVY SUMMER PRE-VV2 PROJECT

WITH PRIOR QUEUE PROJECTS, NO IDENTIFIED SYSTEM UPGRADES IN SERVICE

PSLF Program

sce-victor-2009.d:

Rating = 1

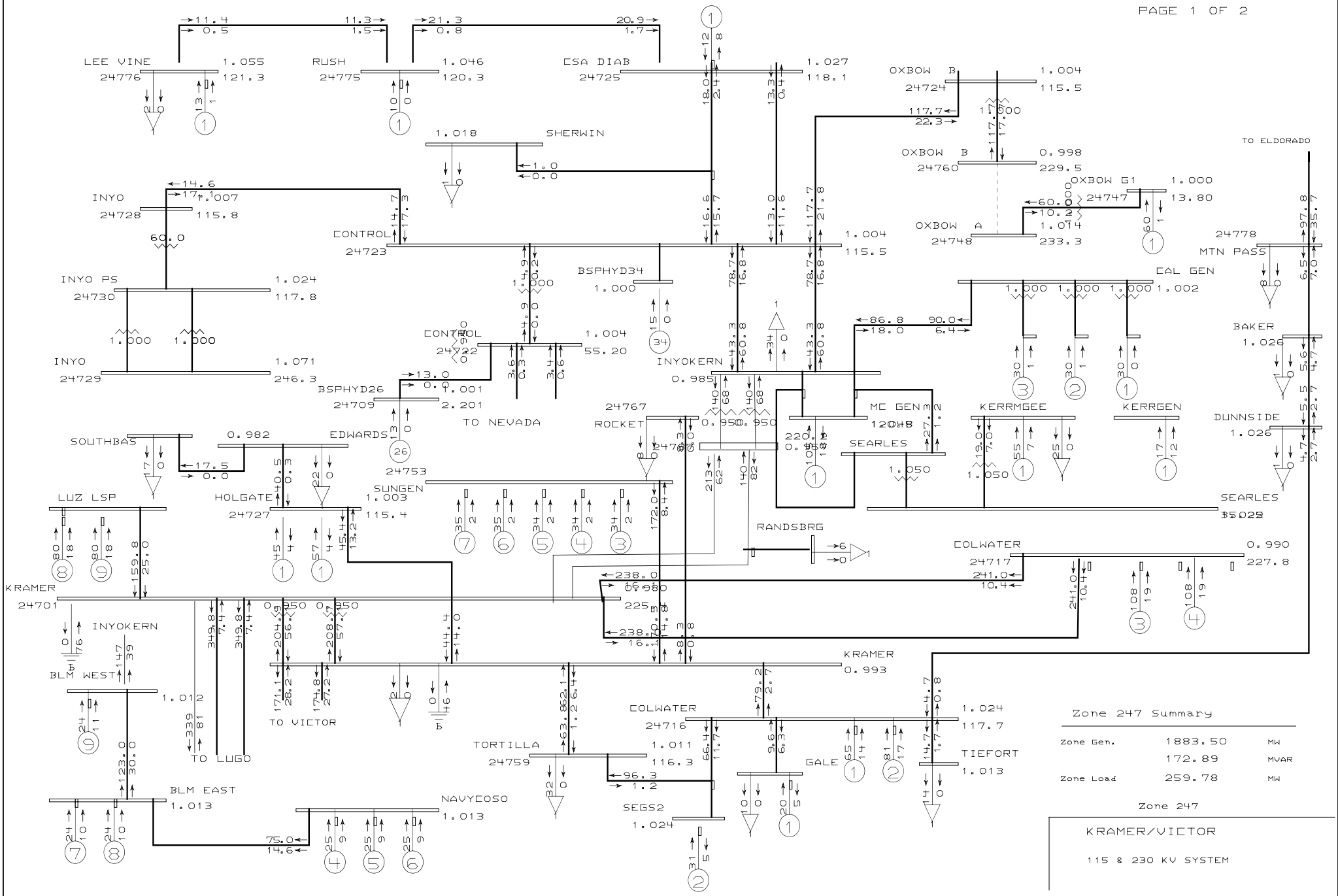

Zone 247 Summary

Zone Gen.	1883.50	MW
	172.89	MVAR
Zone Load	259.78	MW

Zone 247

KRAMER/VICTOR

115 & 230 KV SYSTEM

victorville2\vv-2-2009hs-post-allupgrades.sav MW/MVAR Mon Oct 16 10:21:41 2006

VICTORVILLE 2 PROJECT STUDIES

CASE NAME:2009 HEAVY SUMMER POST-VV2 PROJECT (N-0)

WITH PRIOR QUEUE PROJECTS, AND IDENTIFIED SYSTEM UPGRADES IN SERVICE

PSLF Program

sce-kramerlso upg

Rating = 1

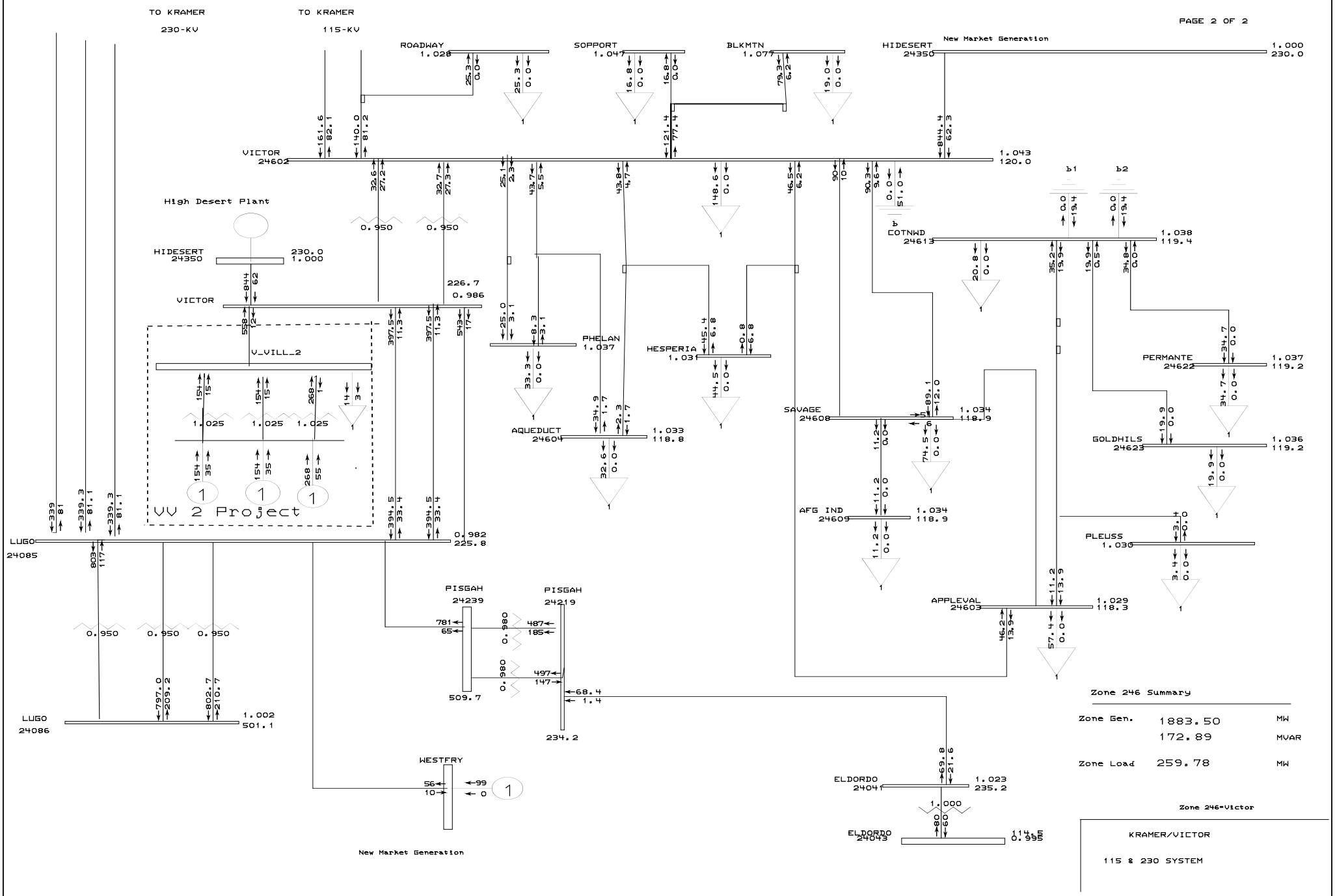

victorville2\vv-2-2009hs-post-allupgrades.sav MW/MVAR Mon Oct 16 10:22:25 2006

VICTORVILLE 2 PROJECT STUDIES

CASE NAME:2009 HEAVY SUMMER POST-VV2 PROJECT (N-0)

WITH PRIOR QUEUE PROJECTS, AND IDENTIFIED SYSTEM UPGRADES IN SERVICE

PSLF Program

victor-2009-waa a

Rating = 1

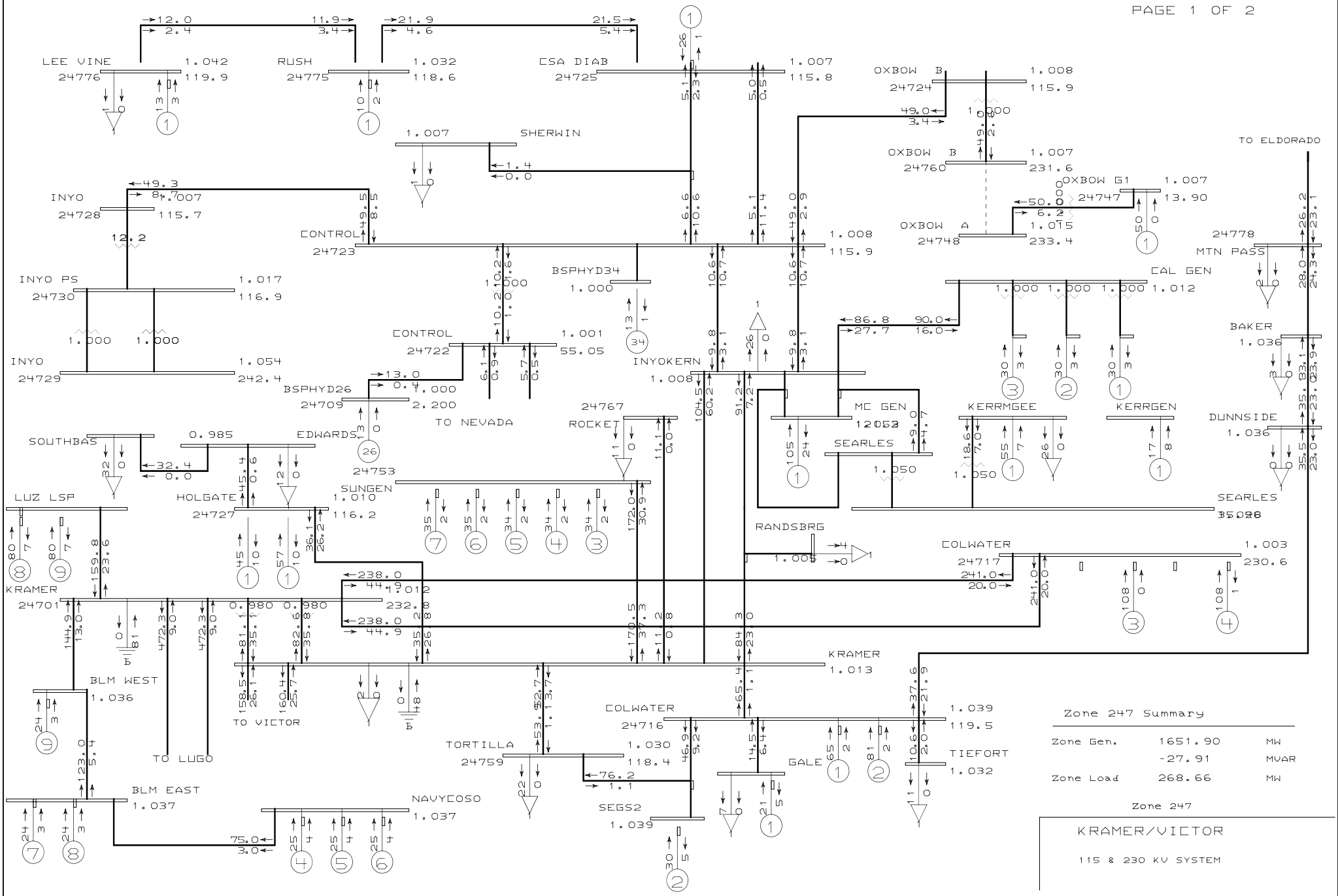

Zone 247 Summary

Zone Gen.	1651.90	MW
	-27.91	MVAR
Zone Load	268.66	MW

Zone 247

KRAMER/VICTOR

115 & 230 KV SYSTEM

victorville2\prevv-2-2010lsp-wopp-upgrades.sav MW/MVAR Mon Oct 16 12:57:17 2006

VICTORVILLE 3 PROJECT STUDIES

CASE NAME: 2010 LIGHT SPRING PRE-VV2 PROJECT (N-0)

WITHOUT PRIOR QUEUE PROJECTS, AND IDENTIFIED SYSTEM UPGRADES IN SERVICE

PSLF Program

sce-kramerlso.drw

Rating = 1

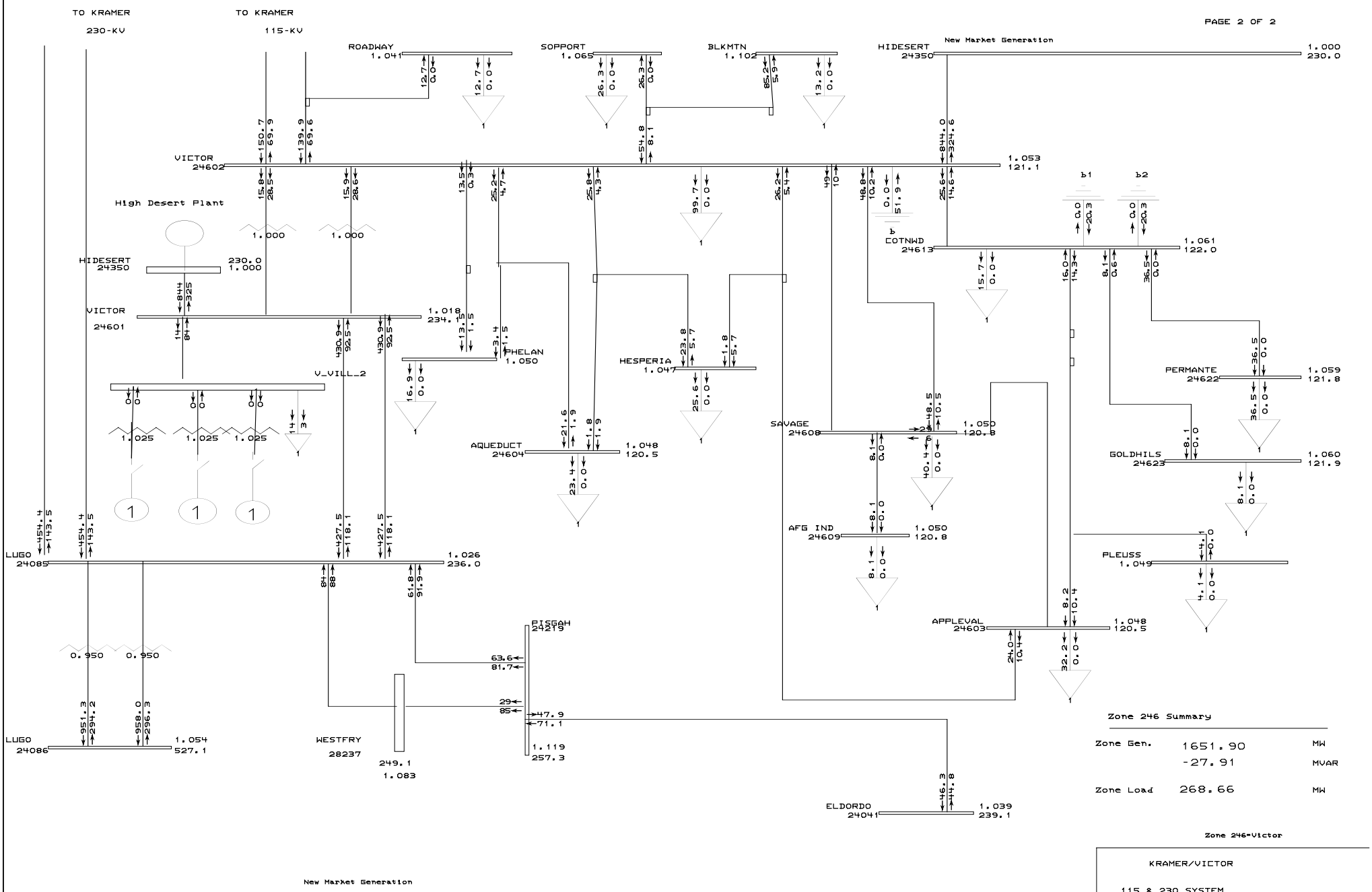

Zone 246 Summary

Zone Gen.	1651.90	MW
	-27.91	MVAR
Zone Load	268.66	MW

Zone 246-Victor

KRAMER/VICTOR

115 & 230 SYSTEM

victorville2\prevv-2-20101sp-wopp-upgrades.sav MW/MVAR Mon Oct 16 12:56:30 2006

VICTORVILLE 3 PROJECT STUDIES

CASE NAME: 2010 LIGHT SPRING PRE-VV2 PROJECT (N-0)

WITHOUT PRIOR QUEUE PROJECTS, AND IDENTIFIED SYSTEM UPGRADES IN SERVICE

PSLF Program

sce-victor-2009.d

Rating = 1

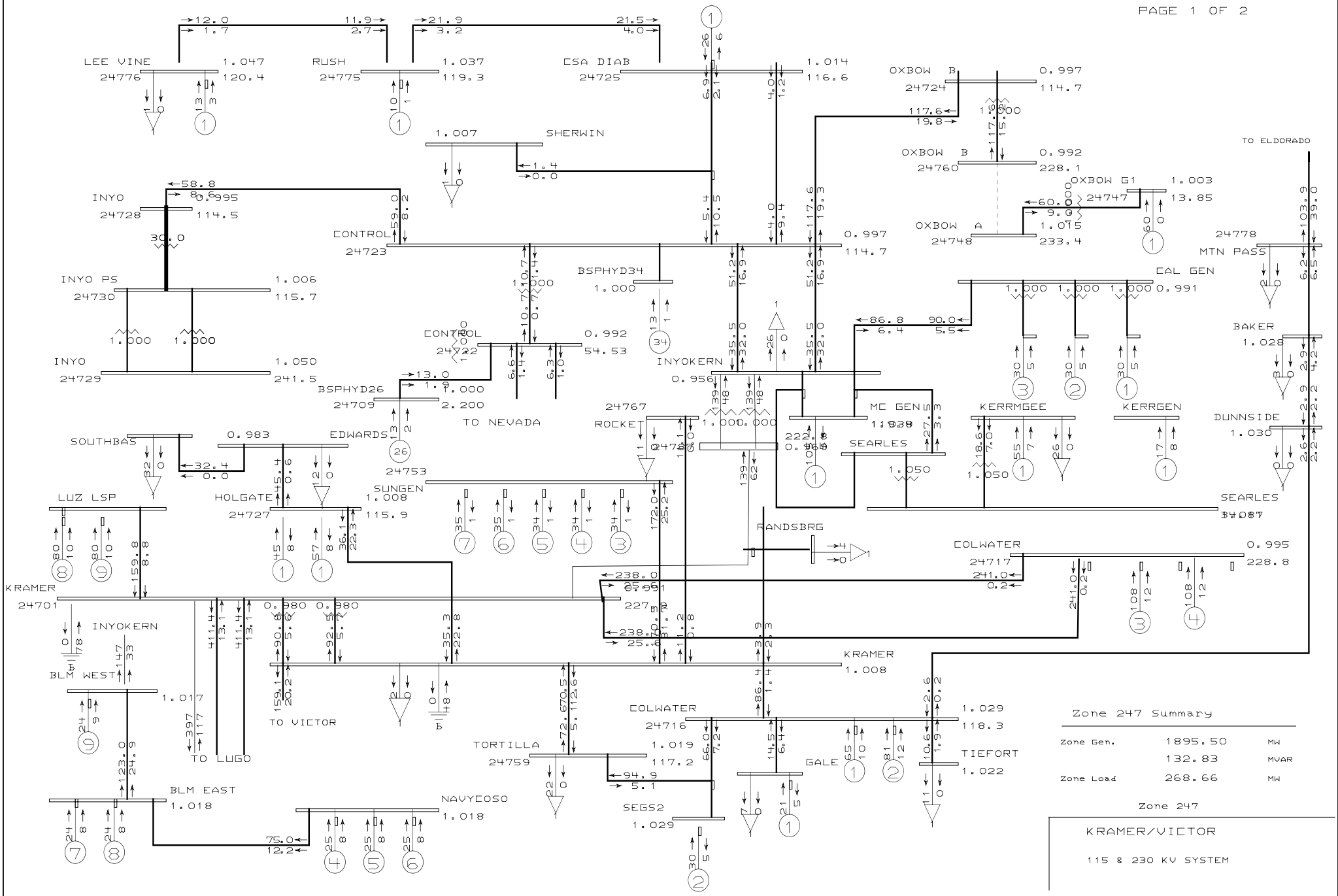

Zone 247 Summary

Zone Gen.	1895.50	MW
	132.83	MVAR
Zone Load	268.66	MW

Zone 247

KRAMER/VICTOR

115 & 230 KV SYSTEM

victorville2\vv-2-2010sp-post-allupgrades.sav MW/MVAR Mon Oct 16 10:24:21 2006

VICTORVILLE 2 PROJECT STUDIES

CASE NAME:2010 LIGHT SPRING POST-VV2 PROJECT (N-0)

WITH PRIOR QUEUE PROJECTS, AND IDENTIFIED SYSTEM UPGRADES IN SERVICE

PSLF Program

sce-kramerlso upgr

Rating = 1

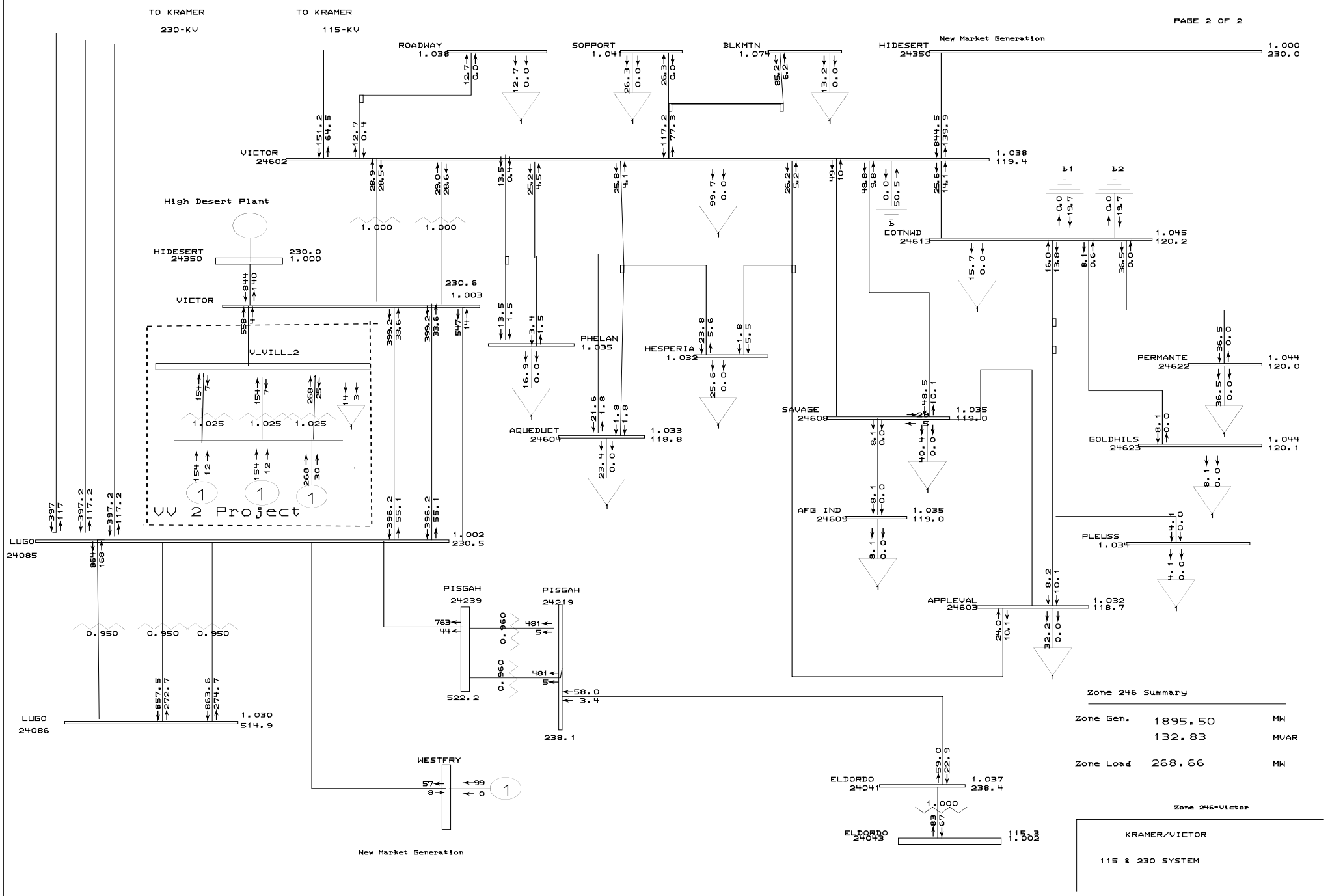

victorville2\vv-2-2010sp-post-allupgrades.sav MW/MVAR Mon Oct 16 10:23:45 2006

VICTORVILLE 2 PROJECT STUDIES

CASE NAME:2010 LIGHT SPRING POST-VV2 PROJECT (N-0)

WITH PRIOR QUEUE PROJECTS, AND IDENTIFIED SYSTEM UPGRADES IN SERVICE

PSLF Program

victor-2009-waa a

Rating = 1

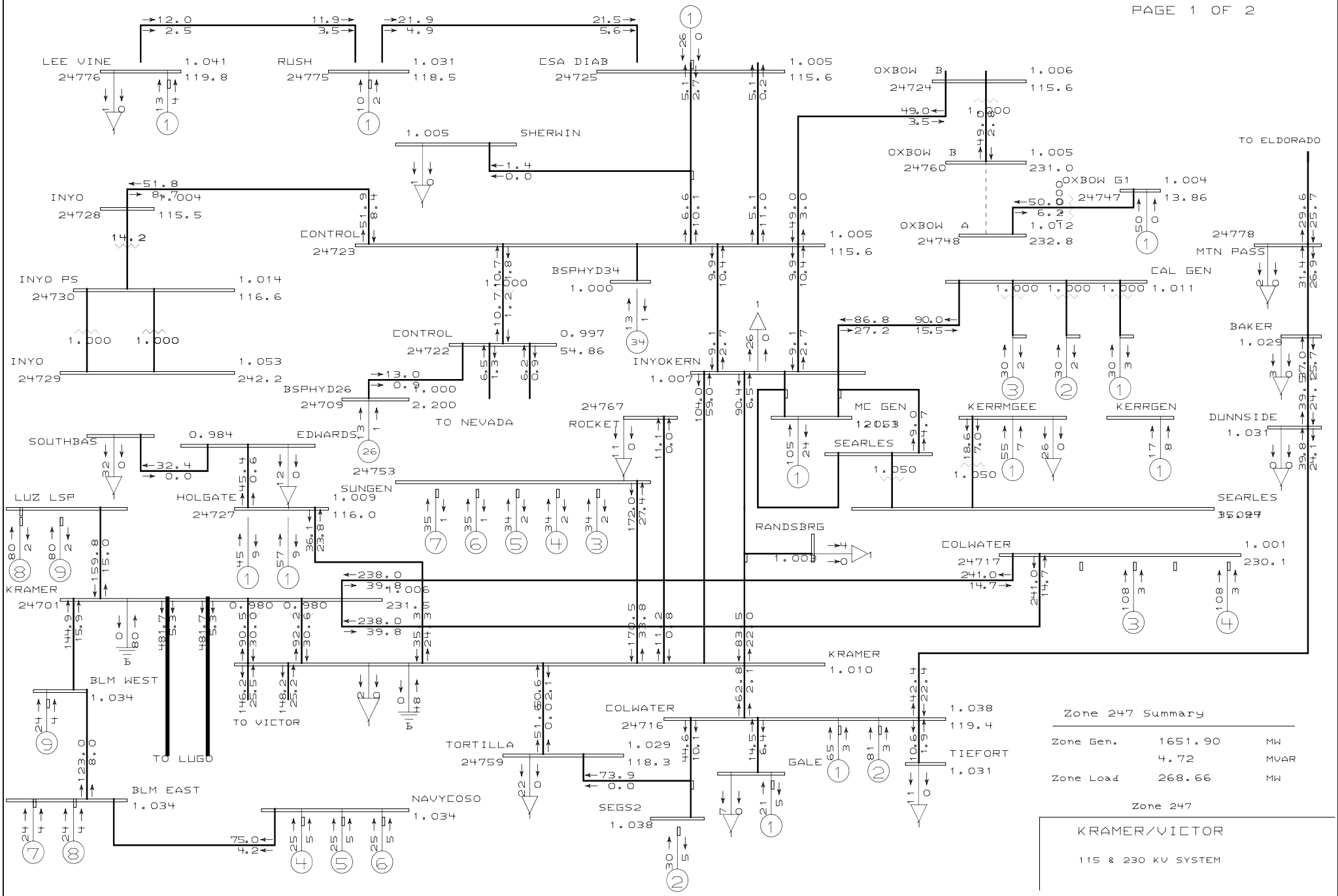

Zone 247 Summary

Zone Gen.	1651.90	MW
	4.72	MVAR
Zone Load	268.66	MW

Zone 247

KRAMER/VICTOR

115 & 230 KV SYSTEM

victorville2\prevv-2-2010lsp-wopp-upgrades.sav MW/MVAR Mon Oct 16 12:58:48 2006

VICTORVILLE 3 PROJECT STUDIES

CASE NAME: 2010 LIGHT SPRING POST-VV2 PROJECT (N-0)

WITHOUT PRIOR QUEUE PROJECTS, AND IDENTIFIED SYSTEM UPGRADES IN SERVICE

PSLF Program

sce-kramerlso.drw

Rating = 1

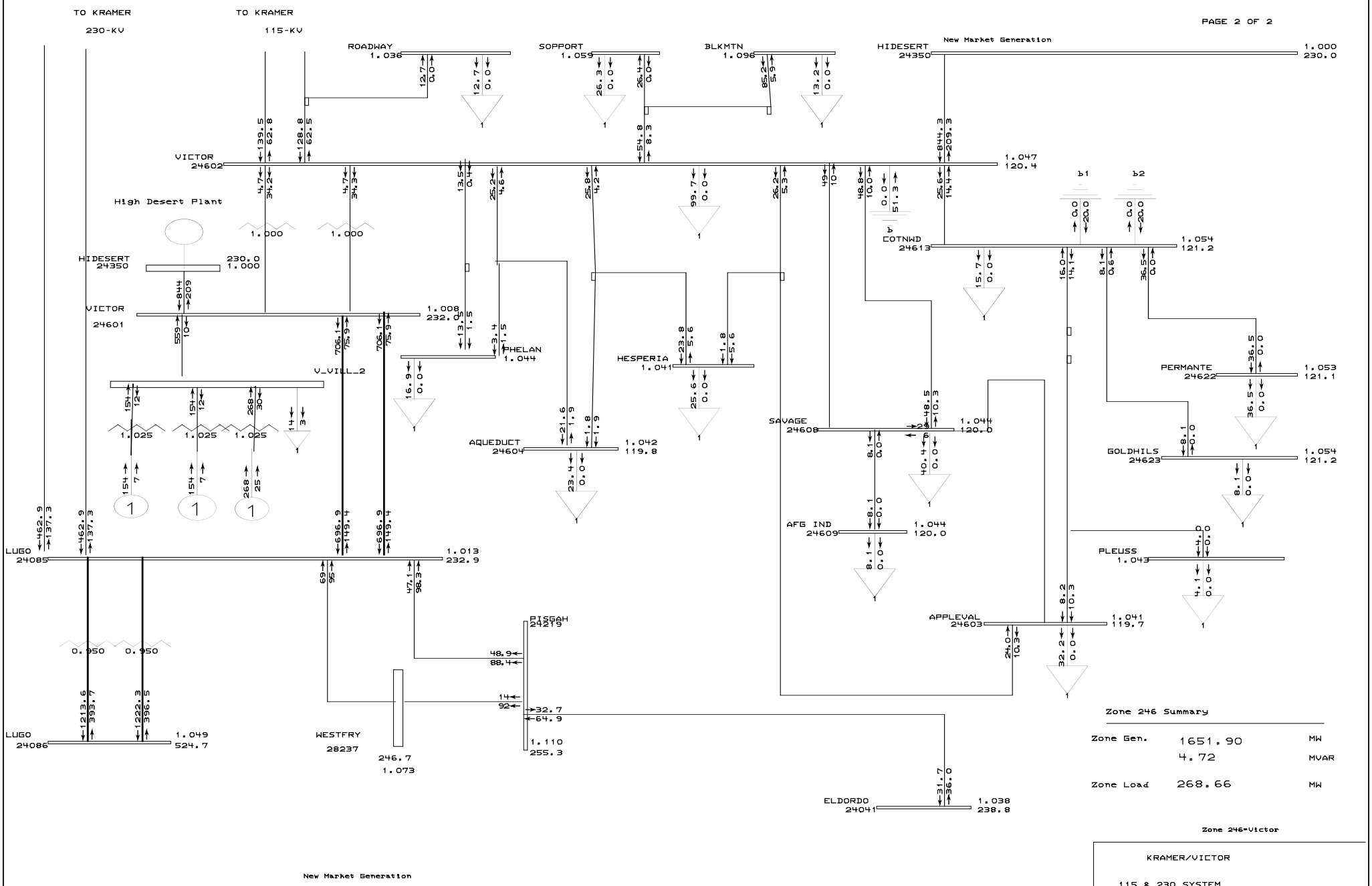

Zone 246 Summary

Zone Gen.	1651.90	MW
	4.72	MVAR
Zone Load	268.66	MW

Zone 246-Victor

KRAMER/VICTOR

115 & 230 SYSTEM

victorville2\prevv-2-20101sp-wopp-upgrades.sav MW/MVAR Mon Oct 16 13:00:47 2006

VICTORVILLE 3 PROJECT STUDIES

CASE NAME: 2010 LIGHT SPRING POST-VV2 PROJECT (N-0)

WITHOUT PRIOR QUEUE PROJECTS, AND IDENTIFIED SYSTEM UPGRADES IN SERVICE

PSLF Program

sce-victor-2009.d

Rating = 1

APPENDIX B

COMPLETE LIST OF POWER FLOW RESULTS

2009 Heavy Summer N-1 condition

Affected Elements	*Normal/ Emergency Ratings*	*Pre-Project Loading*	*Post-Project Loading*	*Impact/ Percentage*	*Contingency Description*
ELDORDO 230/115-kV BANK No.1	102/110*	114	117	3/3%	Base system (n-0)
ELDORDO 230/115-kV BANK No.1	102/110*	111	115	4/3%	LINE PALOVRDE to DEVERS 500 ck 1
ELDORDO 230/115-kV BANK No.1	102/110*	109	113	4/4%	LINE ELDORDO to LUGO 500 ck 1
ELDORDO 230/115-kV BANK No.1	102/110*	111	115	4/3%	LINE LUGO to MOHAVE 500 ck 1
ELDORDO 230/115-kV BANK No.1	102/110*	105	109	5/4%	LINE LUGO to VICTORVL 500 ck 1
ELDORDO 230/115-kV BANK No.1	102/110*	111	115	4/3%	LINE PISGAH to Lugo 230 ck 1
ELDORDO 230/115-kV BANK No.1	102/110*	111	114	4/3%	LINE WESTFRY to LUGO 230 ck 2
ELDORDO 230/115-kV BANK No.1	102/110*	111	115	4/3%	LINE WESTFRY to PISGAH 230 ck 2
ELDORDO 230/115-kV BANK No.1	102/110*	115	119	4/4%	LINE PISGAH to ELDORDO 230 ck 2
ELDORDO 230/115-kV BANK No.1	102/110*	111	115	4/3%	LINE PISGAH to LUGO 230 ck 1
ELDORDO 230/115-kV BANK No.1	102/110*	115	119	4/4%	LINE PISGAH to CIMA 230 ck 1
ELDORDO 230/115-kV BANK No.1	102/110*	115	119	4/4%	LINE CIMA to ELDORDO 230 ck 1
ELDORDO 230/115-kV BANK No.1	102/110*	115	118	3/2%	LINE VICTOR to LUGO 230 ck 1
ELDORDO 230/115-kV BANK No.1	102/110*	115	118	3/2%	LINE VICTOR to LUGO 230 ck 2
ELDORDO 230/115-kV BANK No.1	102/110*	121	127	6/6%	LINE VICTOR-ROADWAY-KRAMER 115 ck 1
ELDORDO 230/115-kV BANK No.1	102/110*	112	115	3/3%	LINE VICTOR-SOPPORT-BLKMTN 115 ck 1
ELDORDO 230/115-kV BANK No.1	102/110*	120	124	4/3%	LINE VICTOR to KRAMER 115 ck 1
ELDORDO 230/115-kV BANK No.1	102/110*	130	134	4/3%	LINE KRAMER to LUGO 230 ck 1
ELDORDO 230/115-kV BANK No.1	102/110*	130	134	4/3%	LINE KRAMER to LUGO 230 ck 2
ELDORDO 230/115-kV BANK No.1	102/110*	127	130	3/3%	LINE KRAMER to COLWATER 115 ck 1
ELDORDO 230/115-kV BANK No.1	102/110*	107	110	3/3%	LINE KRAMER to SUNGEN 115 ck 1
ELDORDO 230/115-kV BANK No.1	102/110*	124	127	3/3%	LINE KRAMER to TORTILLA 115 ck 1
ELDORDO 230/115-kV BANK No.1	102/110*	111	114	3/3%	LINE BLM EAST to BLM WEST 230 ck 1
ELDORDO 230/115-kV BANK No.1	102/110*	110	114	3/3%	LINE BLM WEST to KRAMER 230 ck 1
ELDORDO 230/115-kV BANK No.1	102/110*	123	126	3/3%	LINE COLWATER-SEG2-TORTILLA 115 ck 1
ELDORDO 230/115-kV BANK No.1	102/110*	112	116	3/3%	LINE COLWATER to GALE 115 ck 1
ELDORDO 230/115-kV BANK No.1	102/110*	116	119	3/3%	LINE COLWATER to TIEFORT 115 ck 1
ELDORDO 230/115-kV BANK No.1	102/110*	112	116	3/3%	LINE CONTROL to INYOKERN 115 ck 1
ELDORDO 230/115-kV BANK No.1	102/110*	112	116	3/3%	LINE CONTROL to INYOKERN 115 ck 2
ELDORDO 230/115-kV BANK No.1	102/110*	113	116	3/3%	LINE OXBOW B to CONTROL 115 ck 1
ELDORDO 230/115-kV BANK No.1	102/110*	112	115	3/3%	LINE HOLGATE to KRAMER 115 ck 1
ELDORDO 230/115-kV BANK No.1	102/110*	110	113	3/3%	LINE LUZ LSP to KRAMER 230 ck 1
ELDORDO 230/115-kV BANK No.1	102/110*	110	113	3/3%	LINE MOGEN to HOLGATE 115 ck 1
ELDORDO 230/115-kV BANK No.1	102/110*	113	116	3/3%	LINE OXBOW B to GRNB_TAP 230 ck 1
ELDORDO 230/115-kV BANK No.1	102/110*	112	115	4/3%	LINE KRAMER-INYOKERN-RANDSB 115 ck 1
ELDORDO 230/115-kV BANK No.1	102/110*	115	119	4/3%	LINE EDWARDS-HOLGATE-SOUTHBS 115 ck 1
ELDORDO 230/115-kV BANK No.1	102/110*	112	115	3/3%	LINE LUZ8 to LUZ LSP 230 ck 1
ELDORDO 230/115-kV BANK No.1	102/110*	112	115	3/3%	LINE LUZ9 to LUZ LSP 230 ck 1
ELDORDO 230/115-kV BANK No.1	102/110*	112	115	3/3%	LINE NAVYCOSO to BLM EAST 230 ck 1
ELDORDO 230/115-kV BANK No.1	102/110*	111	114	3/3%	LINE CAL GEN to INYOKERN 115 ck 1
ELDORDO 230/115-kV BANK No.1	102/110*	116	119	3/3%	TRAN KRAMER 230 to KRAMER 115 ck 1
ELDORDO 230/115-kV BANK No.1	102/110*	116	119	3/3%	TRAN KRAMER 230 to KRAMER 115 ck 2
ELDORDO 230/115-kV BANK No.1	102/110*	113	116	3/3%	TRAN OXBOW B 230 to OXBOW B 115 ck 1
ELDORDO 230/115-kV BANK No.1	102/110*	112	115	3/3%	TRAN NAVYCOSO 230 to NAVY II 115 ck 1
ELDORDO 230/115-kV BANK No.1	102/110*	127	Not Converge without existing RAS	-	TRAN LUGO 500 to LUGO 230 ck 1
ELDORDO 230/115-kV BANK No.1	102/110*	127	Not Converge without existing RAS	-	TRAN LUGO 500 to LUGO 230 ck 2
INYO 115-KV PHASE SHIFTER	56/62*	67	69	3/5%	LINE CONTROL to INYOKERN 115 ck 1
INYO 115-KV PHASE SHIFTER	56/62*	67	69	3/5%	LINE CONTROL to INYOKERN 115 ck 2
INYO 115-KV PHASE SHIFTER	56/62*	70	73	3/5%	LINE INYOKERN to KRAMER 115 ck 1
ELDORDO 230/115-kV BANK No.1	102/110*	113	116	4/3%	TRAN ELDORADO 500 to ELDORADO 230 ck 1
ELDORDO 230/115-kV BANK No.1	102/110*	113	116	4/3%	TRAN ELDORADO 500 to ELDORADO 230 ck 2
LUGO 500/230-kV BANK No. 1	1120/1230*	1243	1514	271/22%	Base system (n-0)
LUGO 500/230-kV BANK No. 1	1120/1230*	1257	1530	273/22%	LINE ELDORDO to LUGO 500 ck 1
LUGO 500/230-kV BANK No. 1	1120/1230*	1288	1557	269/22%	LINE LUGO to VICTORVL 500 ck 1
LUGO 500/230-kV BANK No. 1	1120/1230*	1157	1432	275/22%	LINE PISGAH to Lugo 230 ck 1
LUGO 500/230-kV BANK No. 1	1120/1230*	1150	1426	276/22%	LINE WESTFRY to LUGO 230 ck 2
LUGO 500/230-kV BANK No. 1	1120/1230*	1166	1441	275/22%	LINE WESTFRY to PISGAH 230 ck 2
LUGO 500/230-kV BANK No. 1	1120/1230*	1284	1571	287/23%	LINE PISGAH to ELDORDO 230 ck 2
LUGO 500/230-kV BANK No. 1	1120/1230*	1157	1432	275/22%	LINE PISGAH to LUGO 230 ck 1
LUGO 500/230-kV BANK No. 1	1120/1230*	1284	1572	287/23%	LINE PISGAH to CIMA 230 ck 1
LUGO 500/230-kV BANK No. 1	1120/1230*	1282	1567	285/23%	LINE CIMA to ELDORDO 230 ck 1
LUGO 500/230-kV BANK No. 1	1120/1230*	1181	1448	267/22%	LINE VICTOR-SOPPORT-BLKMTN 115 ck 1
LUGO 500/230-kV BANK No. 1	1120/1230*	1261	1532	272/22%	LINE PERMANTE to COTNWD 115 ck 1
LUGO 500/230-kV BANK No. 1	1120/1230*	1165	1431	267/22%	LINE KRAMER to SUNGEN 115 ck 1
LUGO 500/230-kV BANK No. 1	1120/1230*	1187	1457	270/22%	LINE BLM EAST to BLM WEST 230 ck 1
LUGO 500/230-kV BANK No. 1	1120/1230*	1176	1444	268/22%	LINE BLM WEST to KRAMER 230 ck 1
LUGO 500/230-kV BANK No. 1	1120/1230*	1223	1493	270/22%	LINE COLWATER-SEG2-TORTILLA 115 ck 1

2009 Heavy Summer N-2 condition

Affected Elements	*Normal/ Emergency Ratings*	*Pre-Project Loading*	*Post-Project Loading*	*Impact/ Percentage*	*Contingency Description*
ELDORDO 230/115-kV BANK No.1	102/110*	116	120	4/4%	VICTOR 230.00 - LUGO 230.00 1 AND VICTOR 230.00 - LUGO 230.00 2
ELDORDO 230/115-kV BANK No.1	102/110*	111	112	2/1%	ELDORDO 500.00 - LUGO 500.00 1 AND PISGAH 230.00 - ELDORDO 230.00 2
ELDORDO 230/115-kV BANK No.1	102/110*	106	110	4/3%	ELDORDO 500.00 - LUGO 500.00 1 AND PISGAH 230.00 - LUGO 230.00 1
ELDORDO 230/115-kV BANK No.1	102/110*	117	121	4/4%	LUGO 500.00 - MIRALOMA 500.00 2 AND LUGO 500.00 - MIRALOMA 500.00 3
ELDORDO 230/115-kV BANK No.1	102/110*	108	112	4/3%	LUGO 500.00 - MOHAVE 500.00 1 AND PISGAH 230.00 - LUGO 230.00 1
ELDORDO 230/115-kV BANK No.1	102/110*	114	118	4/4%	LUGO 500.00 - VINCENT 500.00 1 AND LUGO 500.00 - VINCENT 500.00 2
ELDORDO 230/115-kV BANK No.1	102/110*	114	118	4/4%	MOENKOPI 500.00 - ELDORDO 500.00 1 AND PISGAH 230.00 - ELDORDO 230.00 2
ELDORDO 230/115-kV BANK No.1	102/110*	112	114	2/2%	MOHAVE 500.00 - ELDORDO 500.00 1 AND PISGAH 230.00 - ELDORDO 230.00 2
ELDORDO 230/115-kV BANK No.1	102/110*	115	119	4/4%	MEAD S 230.00 - ELDORDO 230.00 2 AND PISGAH 230.00 - ELDORDO 230.00 2
ELDORDO 230/115-kV BANK No.1	102/110*	115	119	4/4%	CIMA 230.00 - ELDORDO 230.00 1 AND MEAD S 230.00 - ELDORDO 230.00 1
ELDORDO 230/115-kV BANK No.1	102/110*	111	115	4/4%	ELDORDO 500.00 - LUGO 500.00 1 AND LUGO 500.00 - MIRALOMA 500.00 2
ELDORDO 230/115-kV BANK No.1	102/110*	128	131	4/3%	KRAMER 230.00 - LUGO 230.00 1 AND PISGAH 230.00 - LUGO 230.00 1
ELDORDO 230/115-kV BANK No.1	102/110*	106	110	4/4%	VICTORVILLE - MCCULLOUGH 500.00 1AND VICTORVILLE - MCCULLOUGH 500.00 2
INYO 115-KV PHASE SHIFTER	56/62*	Not Converge without existing RAS	Not Converge without existing RAS	-	CONTROL 115.00 - INYOKERN 115.00 1 AND CONTROL115.00 - INYOKERN 115.00 2
LUGO 500/230-kV BANK No. 1	1120/1230*	Not Converge without existing RAS	1529	-	VICTOR 230.00 - LUGO 230.00 1 AND VICTOR 230.00 - LUGO 230.00 2
LUGO 500/230-kV BANK No. 1	1120/1230*	1302	1568	266/22%	ELDORDO 500.00 - LUGO 500.00 1 AND PISGAH 230.00 - ELDORDO 230.00 2
LUGO 500/230-kV BANK No. 1	1120/1230*	1166	1442	275/22%	ELDORDO 500.00 - LUGO 500.00 1 AND PISGAH 230.00 - LUGO 230.00 1
LUGO 500/230-kV BANK No. 1	1120/1230*	1211	1479	268/22%	LUGO 500.00 - MIRALOMA 500.00 2 AND LUGO 500.00 - MIRALOMA 500.00 3
LUGO 500/230-kV BANK No. 1	1120/1230*	1158	1435	277/22%	LUGO 500.00 - MOHAVE 500.00 1 AND PISGAH 230.00 - LUGO 230.00 1
LUGO 500/230-kV BANK No. 1	1120/1230*	1222	1489	267/22%	LUGO 500.00 - VINCENT 500.00 1 AND LUGO 500.00 - VINCENT 500.00 2
LUGO 500/230-kV BANK No. 1	1120/1230*	1282	1571	289/24%	MOENKOPI 500.00 - ELDORDO 500.00 1 AND PISGAH 230.00 - ELDORDO 230.00 2
LUGO 500/230-kV BANK No. 1	1120/1230*	1294	1584	290/24%	MOHAVE 500.00 - ELDORDO 500.00 1 AND PISGAH 230.00 - ELDORDO 230.00 2
LUGO 500/230-kV BANK No. 1	1120/1230*	1283	1571	287/23%	MEAD S 230.00 - ELDORDO 230.00 2 AND PISGAH 230.00 - ELDORDO 230.00 2
LUGO 500/230-kV BANK No. 1	1120/1230*	1281	1566	285/23%	CIMA 230.00 - ELDORDO 230.00 1 AND MEAD S 230.00 - ELDORDO 230.00 1
LUGO 500/230-kV BANK No. 1	1120/1230*	1282	1546	264/21%	LUGO 500.00 - VINCENT 500.00 2 AND LUGO 500.00 - VICTORVL 500.00 1
LUGO 500/230-kV BANK No. 1	1120/1230*	1156	1431	274/22%	KRAMER 230.00 - LUGO 230.00 1 AND PISGAH 230.00 - LUGO 230.00 1
LUGO 500/230-kV BANK No. 1	1120/1230*	1270	1542	271/22%	VICTORVILLE - MCCULLOUGH 500.00 1AND VICTORVILLE - MCCULLOUGH 500.00 2
LUGO 500/230-kV BANK No. 2	1120/1230*	Not Converge without existing RAS	1540	-	VICTOR 230.00 - LUGO 230.00 1 AND VICTOR 230.00 - LUGO 230.00 2
LUGO 500/230-kV BANK No. 2	1120/1230*	1311	1579	268/22%	ELDORDO 500.00 - LUGO 500.00 1 AND PISGAH 230.00 - ELDORDO 230.00 2
LUGO 500/230-kV BANK No. 2	1120/1230*	1175	1452	277/23%	ELDORDO 500.00 - LUGO 500.00 1 AND PISGAH 230.00 - LUGO 230.00 1
LUGO 500/230-kV BANK No. 2	1120/1230*	1220	1490	270/22%	LUGO 500.00 - MIRALOMA 500.00 2 AND LUGO 500.00 - MIRALOMA 500.00 3
LUGO 500/230-kV BANK No. 2	1120/1230*	1166	1445	279/23%	LUGO 500.00 - MOHAVE 500.00 1 AND PISGAH 230.00 - LUGO 230.00 1
LUGO 500/230-kV BANK No. 2	1120/1230*	1231	1500	269/22%	LUGO 500.00 - VINCENT 500.00 1 AND LUGO 500.00 - VINCENT 500.00 2
LUGO 500/230-kV BANK No. 2	1120/1230*	1291	1582	291/24%	MOENKOPI 500.00 - ELDORDO 500.00 1 AND PISGAH 230.00 - ELDORDO 230.00 2
LUGO 500/230-kV BANK No. 2	1120/1230*	1303	1596	293/24%	MOHAVE 500.00 - ELDORDO 500.00 1 AND PISGAH 230.00 - ELDORDO 230.00 2
LUGO 500/230-kV BANK No. 2	1120/1230*	1292	1582	289/24%	MEAD S 230.00 - ELDORDO 230.00 2 AND PISGAH 230.00 - ELDORDO 230.00 2
LUGO 500/230-kV BANK No. 2	1120/1230*	1291	1577	287/23%	CIMA 230.00 - ELDORDO 230.00 1 AND MEAD S 230.00 - ELDORDO 230.00 1
LUGO 500/230-kV BANK No. 2	1120/1230*	1291	1557	265/22%	LUGO 500.00 - VINCENT 500.00 2 AND LUGO 500.00 - VICTORVL 500.00 1
LUGO 500/230-kV BANK No. 2	1120/1230*	1164	1441	276/22%	KRAMER 230.00 - LUGO 230.00 1 AND PISGAH 230.00 - LUGO 230.00 1
LUGO 500/230-kV BANK No. 2	1120/1230*	1279	1553	273/22%	VICTORVILLE - MCCULLOUGH 500.00 1AND VICTORVILLE - MCCULLOUGH 500.00 2
ELDORADO-MOUNTAIN PASS 115-kV LINE No.1	415/530**	551	574	22/4%	VICTOR 230.00 - LUGO 230.00 1 AND VICTOR 230.00 - LUGO 230.00 2
ELDORADO-MOUNTAIN PASS 115-kV LINE No.1	415/530**	558	581	23/4%	LUGO 500.00 - MIRALOMA 500.00 2 AND LUGO 500.00 - MIRALOMA 500.00 3
ELDORADO-MOUNTAIN PASS 115-kV LINE No.1	415/530**	519	539	20/4%	LUGO 500.00 - MOHAVE 500.00 1 AND PISGAH 230.00 - LUGO 230.00 1
ELDORADO-MOUNTAIN PASS 115-kV LINE No.1	415/530**	548	570	22/4%	LUGO 500.00 - VINCENT 500.00 1 AND LUGO 500.00 - VINCENT 500.00 2
ELDORADO-MOUNTAIN PASS 115-kV LINE No.1	415/530**	546	568	22/4%	MOENKOPI 500.00 - ELDORDO 500.00 1 AND PISGAH 230.00 - ELDORDO 230.00 2
ELDORADO-MOUNTAIN PASS 115-kV LINE No.1	415/530**	533	548	15/3%	MOHAVE 500.00 - ELDORDO 500.00 1 AND PISGAH 230.00 - ELDORDO 230.00 2
ELDORADO-MOUNTAIN PASS 115-kV LINE No.1	415/530**	546	567	21/4%	MEAD S 230.00 - ELDORDO 230.00 2 AND PISGAH 230.00 - ELDORDO 230.00 2
ELDORADO-MOUNTAIN PASS 115-kV LINE No.1	415/530**	546	567	20/4%	CIMA 230.00 - ELDORDO 230.00 1 AND MEAD S 230.00 - ELDORDO 230.00 1
ELDORADO-MOUNTAIN PASS 115-kV LINE No.1	415/530**	537	553	17/3%	LUGO 500.00 - MIRALOMA 500.00 3AND LUGO 500.00 - MOHAVE 500.00 1
ELDORADO-MOUNTAIN PASS 115-kV LINE No.1	415/530**	528	550	21/4%	ELDORDO 500.00 - LUGO 500.00 1 AND LUGO 500.00 - MIRALOMA 500.00 2
ELDORADO-MOUNTAIN PASS 115-kV LINE No.1	415/530**	501	526	25/5%	LUGO 500.00 - VINCENT 500.00 2 AND LUGO 500.00 - VICTORVL 500.00 1
ELDORADO-MOUNTAIN PASS 115-kV LINE No.1	415/530**	612	632	20/4%	KRAMER 230.00 - LUGO 230.00 1 AND PISGAH 230.00 - LUGO 230.00 1
ELDORADO-MOUNTAIN PASS 115-kV LINE No.1	415/530**	528	544	15/3%	ELDORDO 500.00 - LUGO 500.00 1 AND PISGAH 230.00 - ELDORDO 230.00 2
ELDORADO-MOUNTAIN PASS 115-kV LINE No.1	415/530**	509	529	21/4%	ELDORDO 500.00 - LUGO 500.00 1 AND PISGAH 230.00 - LUGO 230.00 1

* MVA

** AMPERES

2009 Heavy Summer with a third Lugo 500/230-kV AA bank N-1 Condition

Affected Elements	*Normal/ Emergency Ratings (Amps)*	*Post-Project Loading (Amps)*	*Post-Project with a third Lugo AA tranformer Bank Loading (Amps)*	*Impact/ Percentage*	*Contingency Description*
Lugo-Westfry 230-kV Line No.2	726	**847**	**898**	51/7%	Base system (n-0)
Lugo-Westfry 230-kV Line No.2	726	**884**	**934**	50/7%	LINE PALOVRDE to DEVERS 500 ck 1
Lugo-Westfry 230-kV Line No.2	726	**912**	**963**	51/7%	LINE ELDORDO to LUGO 500 ck 1
Lugo-Westfry 230-kV Line No.2	726	**885**	**936**	51/7%	LINE LUGO to MOHAVE 500 ck 1
Lugo-Westfry 230-kV Line No.2	726	**981**	**1033**	52/7%	LINE LUGO to VICTORVL 500 ck 1
Lugo-Westfry 230-kV Line No.2	726	**1244**	**1315**	71/10%	LINE PISGAH to Lugo 230 ck 1
Lugo-Westfry 230-kV Line No.2	726	**1244**	**1315**	71/10%	LINE PISGAH to LUGO 230 ck 1
Lugo-Westfry 230-kV Line No.2	726	**987**	**994**	7/1%	LINE CIMA to ELDORDO 230 ck 1
Lugo-Westfry 230-kV Line No.2	726	**863**	**909**	45/6%	LINE KRAMER to LUGO 230 ck 1
Lugo-Westfry 230-kV Line No.2	726	**863**	**909**	45/6%	LINE KRAMER to LUGO 230 ck 2
Lugo-Westfry 230-kV Line No.2	726	**839**	**890**	51/7%	LINE COLWATER-DUNN-BAK-MNTPS-ELDORADO 115 ck 1
Lugo-Westfry 230-kV Line No.2	726	Not Converge without existing RAS	**848**	-	TRAN LUGO 500 to LUGO 230 ck 1
Lugo-Westfry 230-kV Line No.2	726	Not Converge without existing RAS	**847**	-	TRAN LUGO 500 to LUGO 230 ck 2
Lugo-Westfry 230-kV Line No.2	726	**860**	**910**	50/7%	TRAN Eldorado 500 to Eldorado 230 ck 1
Lugo-Westfry 230-kV Line No.2	726	**859**	**910**	50/7%	TRAN Eldorado 500 to Eldorado 230 ck 2
Lugo-Pisgah 230-kV Line No.1	726	**791**	**843**	52/7%	Base system (n-0)
Lugo-Pisgah 230-kV Line No.1	726	**827**	**879**	52/7%	LINE PALOVRDE to DEVERS 500 ck 1
Lugo-Pisgah 230-kV Line No.1	726	**856**	**908**	52/7%	LINE ELDORDO to LUGO 500 ck 1
Lugo-Pisgah 230-kV Line No.1	726	**828**	**880**	53/7%	LINE LUGO to MOHAVE 500 ck 1
Lugo-Pisgah 230-kV Line No.1	726	**924**	**978**	54/7%	LINE LUGO to VICTORVL 500 ck 1
Lugo-Pisgah 230-kV Line No.1	726	**1229**	**1295**	66/9%	LINE WESTFRY to LUGO 230 ck 2
Lugo-Pisgah 230-kV Line No.1	726	**1135**	**1212**	76/11%	LINE WESTFRY to PISGAH 230 ck 2
Lugo-Pisgah 230-kV Line No.1	726	**933**	**941**	8/1%	LINE CIMA to ELDORDO 230 ck 1
Lugo-Pisgah 230-kV Line No.1	726	**806**	**853**	47/7%	LINE KRAMER to LUGO 230 ck 1
Lugo-Pisgah 230-kV Line No.1	726	**806**	**853**	47/7%	LINE KRAMER to LUGO 230 ck 2
Lugo-Pisgah 230-kV Line No.1	726	**782**	**835**	53/7%	LINE COLWATER-DUNN-BAK-MNTPS-ELDORADO 115 ck 1
Lugo-Pisgah 230-kV Line No.1	726	**737**	**791**	55/8%	TRAN LUGO 500 to LUGO 230 ck 1
Lugo-Pisgah 230-kV Line No.1	726	**735**	**791**	55/8%	TRAN LUGO 500 to LUGO 230 ck 2
Lugo-Pisgah 230-kV Line No.1	726	**803**	**855**	52/7%	TRAN Eldorado 500 to Eldorado 230 ck 1
Lugo-Pisgah 230-kV Line No.1	726	**803**	**855**	52/7%	TRAN Eldorado 500 to Eldorado 230 ck 2
Pisgah-Westfry 230-kV Line No.2	726	703	**756**	53/7%	Base system (n-0)
Pisgah-Westfry 230-kV Line No.2	726	**737**	**790**	53/7%	LINE PALOVRDE to DEVERS 500 ck 1
Pisgah-Westfry 230-kV Line No.2	726	**765**	**819**	54/7%	LINE ELDORDO to LUGO 500 ck 1
Pisgah-Westfry 230-kV Line No.2	726	**738**	**792**	54/7%	LINE LUGO to MOHAVE 500 ck 1
Pisgah-Westfry 230-kV Line No.2	726	**832**	**887**	55/8%	LINE LUGO to VICTORVL 500 ck 1
Pisgah-Westfry 230-kV Line No.2	726	**1098**	**1172**	74/10%	LINE PISGAH to Lugo 230 ck 1
Pisgah-Westfry 230-kV Line No.2	726	**1098**	**1172**	74/10%	LINE PISGAH to LUGO 230 ck 1
Pisgah-Westfry 230-kV Line No.2	726	**840**	**852**	12/2%	LINE CIMA to ELDORDO 230 ck 1
Pisgah-Westfry 230-kV Line No.2	726	716	**765**	49/7%	LINE KRAMER to LUGO 230 ck 1
Pisgah-Westfry 230-kV Line No.2	726	716	**765**	49/7%	LINE KRAMER to LUGO 230 ck 2
Pisgah-Westfry 230-kV Line No.2	726	695	**748**	54/7%	LINE COLWATER-DUNN-BAK-MNTPS-ELDORADO 115 ck 1
Pisgah-Westfry 230-kV Line No.2	726	715	**768**	53/7%	TRAN Eldorado 500 to Eldorado 230 ck 1
Pisgah-Westfry 230-kV Line No.2	726	715	**768**	53/7%	TRAN Eldorado 500 to Eldorado 230 ck 2

2009 Heavy Summer with a third Lugo 500/230-kV AA bank N-2 Condition

Affected Elements	*Normal/ Emergency Ratings (Amps)*	*Post-Project Loading (Amps)*	*Post-Project with a third Lugo AA tranformer Bank Loading (Amps)*	*Impact/ Percentage*	*Contingency Description*
Lugo-Westfry 230-kV Line No.2	726	**855**	**906**	51/7%	VICTOR 230.00 - LUGO 230.00 1, VICTOR 230.00 - LUGO 230.00 2
Lugo-Westfry 230-kV Line No.2	726	**855**	**906**	51/7%	CAMINO 230.00 - MEAD S 230.00 E, CAMINO 230.00 - MEAD S 230.00 W
Lugo-Westfry 230-kV Line No.2	726	**1025**	**1076**	51/7%	ELDORDO 500.00 - LUGO 500.00 1, PISGAH 230.00 - ELDORDO 230.00 2
Lugo-Westfry 230-kV Line No.2	726	**1385**	**1427**	42/6%	ELDORDO 500.00 - LUGO 500.00 1, PISGAH 230.00 - LUGO 230.00 1
Lugo-Westfry 230-kV Line No.2	726	**818**	**869**	50/7%	LUGO 500.00 - MIRALOMA 500.00 2, LUGO 500.00 - MIRALOMA 500.00 3
Lugo-Westfry 230-kV Line No.2	726	**1315**	**1379**	64/9%	LUGO 500.00 - MOHAVE 500.00 1, PISGAH 230.00 - LUGO 230.00 1
Lugo-Westfry 230-kV Line No.2	726	**867**	**916**	49/7%	LUGO 500.00 - VINCENT 500.00 1, LUGO 500.00 - VINCENT 500.00 2
Lugo-Westfry 230-kV Line No.2	726	**858**	**909**	51/7%	MIDWAY 500.00 - VINCENT 500.00 1, MIDWAY 500.00 - VINCENT 500.00 2
Lugo-Westfry 230-kV Line No.2	726	**989**	**1040**	51/7%	MOHAVE 500.00 - ELDORDO 500.00 1, PISGAH 230.00 - ELDORDO 230.00 2
Lugo-Westfry 230-kV Line No.2	726	**987**	**994**	7/1%	CIMA 230.00 - ELDORDO 230.00 1, MEAD S 230.00 - ELDORDO 230.00 1
Lugo-Westfry 230-kV Line No.2	726	**877**	**928**	51/7%	LUGO 500.00 - MIRALOMA 500.00 3, LUGO 500.00 - MOHAVE 500.00 1
Lugo-Westfry 230-kV Line No.2	726	**903**	**954**	51/7%	ELDORDO 500.00 - LUGO 500.00 1, LUGO 500.00 - MIRALOMA 500.00 2
Lugo-Westfry 230-kV Line No.2	726	**994**	**1045**	51/7%	LUGO 500.00 - VINCENT 500.00 2, LUGO 500.00 - VICTORVL 500.00 1
Lugo-Westfry 230-kV Line No.2	726	**1292**	**1335**	43/6%	KRAMER 230.00 - LUGO 230.00 1, PISGAH 230.00 - LUGO 230.00 1
Lugo-Westfry 230-kV Line No.2	726	**949**	**1000**	51/7%	VICTORVILLE - MCCULLOUGH 500.00 1 AND VICTORVILLE - MCCULLOUGH 500.00 2
Lugo-Pisgah 230-kV Line No.1	726	**799**	**851**	52/7%	CAMINO 230.00 - MEAD S 230.00 E, CAMINO 230.00 - MEAD S 230.00 W
Lugo-Pisgah 230-kV Line No.1	726	**971**	**1023**	52/7%	ELDORDO 500.00 - LUGO 500.00 1, PISGAH 230.00 - ELDORDO 230.00 2
Lugo-Pisgah 230-kV Line No.1	726	**760**	**812**	52/7%	LUGO 500.00 - MIRALOMA 500.00 2, LUGO 500.00 - MIRALOMA 500.00 3
Lugo-Pisgah 230-kV Line No.1	726	**809**	**859**	50/7%	LUGO 500.00 - VINCENT 500.00 1, LUGO 500.00 - VINCENT 500.00 2
Lugo-Pisgah 230-kV Line No.1	726	**801**	**853**	52/7%	MIDWAY 500.00 - VINCENT 500.00 1, MIDWAY 500.00 - VINCENT 500.00 2
Lugo-Pisgah 230-kV Line No.1	726	**935**	**987**	53/7%	MOHAVE 500.00 - ELDORDO 500.00 1, PISGAH 230.00 - ELDORDO 230.00 2
Lugo-Pisgah 230-kV Line No.1	726	**932**	**940**	8/1%	CIMA 230.00 - ELDORDO 230.00 1, MEAD S 230.00 - ELDORDO 230.00 1
Lugo-Pisgah 230-kV Line No.1	726	**819**	**872**	53/7%	LUGO 500.00 - MIRALOMA 500.00 3, LUGO 500.00 - MOHAVE 500.00 1
Lugo-Pisgah 230-kV Line No.1	726	**846**	**899**	53/7%	ELDORDO 500.00 - LUGO 500.00 1, LUGO 500.00 - MIRALOMA 500.00 2
Lugo-Pisgah 230-kV Line No.1	726	**936**	**989**	53/7%	LUGO 500.00 - VINCENT 500.00 2, LUGO 500.00 - VICTORVL 500.00 1
Lugo-Pisgah 230-kV Line No.1	726	**892**	**945**	53/7%	VICTORVILLE - MCCULLOUGH 500.00 1 AND VICTORVILLE - MCCULLOUGH 500.00 2
Pisgah-Westfry 230-kV Line No.2	726	711	**764**	53/7%	CAMINO 230.00 - MEAD S 230.00 E, CAMINO 230.00 - MEAD S 230.00 W
Pisgah-Westfry 230-kV Line No.2	726	**873**	**929**	56/8%	ELDORDO 500.00 - LUGO 500.00 1, PISGAH 230.00 - ELDORDO 230.00 2
Pisgah-Westfry 230-kV Line No.2	726	**1232**	**1279**	47/6%	ELDORDO 500.00 - LUGO 500.00 1, PISGAH 230.00 - LUGO 230.00 1
Pisgah-Westfry 230-kV Line No.2	726	**1165**	**1232**	67/9%	LUGO 500.00 - MOHAVE 500.00 1, PISGAH 230.00 - LUGO 230.00 1
Pisgah-Westfry 230-kV Line No.2	726	716	**768**	53/7%	LUGO 500.00 - VINCENT 500.00 1, LUGO 500.00 - VINCENT 500.00 2
Pisgah-Westfry 230-kV Line No.2	726	711	**765**	53/7%	MIDWAY 500.00 - VINCENT 500.00 1, MIDWAY 500.00 - VINCENT 500.00 2
Pisgah-Westfry 230-kV Line No.2	726	**840**	**895**	55/8%	MOHAVE 500.00 - ELDORDO 500.00 1, PISGAH 230.00 - ELDORDO 230.00 2
Pisgah-Westfry 230-kV Line No.2	726	**840**	**851**	11/2%	CIMA 230.00 - ELDORDO 230.00 1, MEAD S 230.00 - ELDORDO 230.00 1
Pisgah-Westfry 230-kV Line No.2	726	**729**	**783**	54/7%	LUGO 500.00 - MIRALOMA 500.00 3, LUGO 500.00 - MOHAVE 500.00 1
Pisgah-Westfry 230-kV Line No.2	726	**754**	**809**	55/8%	ELDORDO 500.00 - LUGO 500.00 1, LUGO 500.00 - MIRALOMA 500.00 2
Pisgah-Westfry 230-kV Line No.2	726	**841**	**896**	55/8%	LUGO 500.00 - VINCENT 500.00 2, LUGO 500.00 - VICTORVL 500.00 1
Pisgah-Westfry 230-kV Line No.2	726	**1140**	**1189**	49/7%	KRAMER 230.00 - LUGO 230.00 1, PISGAH 230.00 - LUGO 230.00 1
Pisgah-Westfry 230-kV Line No.2	726	**800**	**854**	55/8%	VICTORVILLE - MCCULLOUGH 500.00 1 AND VICTORVILLE - MCCULLOUGH 500.00 2

2010 Light Spring N-1 condition

Affected Elements	Normal/ Emergency Ratings	Pre-Project Loading	Post-Project Loading	Impact/ Percentage	Contingency Description
ELDORDO 230/115-kV BANK No.1	102/110*	124	127	3/3%	Base system (n-0)
ELDORDO 230/115-kV BANK No.1	102/110*	122	125	3/3%	line PALOVRDE to DEVERS 500 ck 1
ELDORDO 230/115-kV BANK No.1	102/110*	120	123	3/3%	line ELDORDO to LUGO 500 ck 1
ELDORDO 230/115-kV BANK No.1	102/110*	122	125	3/3%	line LUGO to MOHAVE 500 ck 1
ELDORDO 230/115-kV BANK No.1	102/110*	116	120	4/4%	line LUGO to VICTORVL 500 ck 1
ELDORDO 230/115-kV BANK No.1	102/110*	122	124	2/2%	line PISGAH to Lugo 230 ck 1
ELDORDO 230/115-kV BANK No.1	102/110*	121	124	3/3%	line WESTFRY to LUGO 230 ck 2
ELDORDO 230/115-kV BANK No.1	102/110*	122	125	3/3%	line WESTFRY to PISGAH 230 ck 2
ELDORDO 230/115-kV BANK No.1	102/110*	125	128	3/3%	line PISGAH to ELDORDO 230 ck 2
ELDORDO 230/115-kV BANK No.1	102/110*	122	124	2/2%	line PISGAH to LUGO 230 ck 1
ELDORDO 230/115-kV BANK No.1	102/110*	125	128	3/3%	line PISGAH to CIMA 230 ck 1
ELDORDO 230/115-kV BANK No.1	102/110*	125	128	3/3%	line CIMA to ELDORDO 230 ck 1
ELDORDO 230/115-kV BANK No.1	102/110*	126	129	3/3%	line VICTOR to LUGO 230 ck 1
ELDORDO 230/115-kV BANK No.1	102/110*	126	129	3/3%	line VICTOR to LUGO 230 ck 2
ELDORDO 230/115-kV BANK No.1	102/110*	130	133	3/3%	line VICTOR-ROADWAY-KRAMER 115 ck 1
ELDORDO 230/115-kV BANK No.1	102/110*	122	125	3/3%	line VICTOR-SOPPORT-BLKMTN 115 ck 1
ELDORDO 230/115-kV BANK No.1	102/110*	130	133	3/3%	line VICTOR to KRAMER 115 ck 1
ELDORDO 230/115-kV BANK No.1	102/110*	141	143	2/2%	line KRAMER to LUGO 230 ck 1
ELDORDO 230/115-kV BANK No.1	102/110*	141	143	2/2%	line KRAMER to LUGO 230 ck 2
ELDORDO 230/115-kV BANK No.1	102/110*	139	141	2/2%	line KRAMER to COLWATER 115 ck 1
ELDORDO 230/115-kV BANK No.1	102/110*	118	120	2/2%	line KRAMER to SUNGEN 115 ck 1
ELDORDO 230/115-kV BANK No.1	102/110*	136	138	2/2%	line KRAMER to TORTILLA 115 ck 1
ELDORDO 230/115-kV BANK No.1	102/110*	121	124	3/3%	line BLM EAST to BLM WEST 230 ck 1
ELDORDO 230/115-kV BANK No.1	102/110*	121	124	3/3%	line BLM WEST to KRAMER 230 ck 1
ELDORDO 230/115-kV BANK No.1	102/110*	134	136	2/2%	line COLWATER-SEG2-TORTILLA 115 ck 1
ELDORDO 230/115-kV BANK No.1	102/110*	122	125	3/3%	line COLWATER to GALE 115 ck 1
ELDORDO 230/115-kV BANK No.1	102/110*	126	128	2/2%	line COLWATER to TIEFORT 115 ck 1
ELDORDO 230/115-kV BANK No.1	102/110*	122	125	3/3%	line OXBOW B to CONTROL 115 ck 1
ELDORDO 230/115-kV BANK No.1	102/110*	123	126	3/3%	line HOLGATE to KRAMER 115 ck 1
ELDORDO 230/115-kV BANK No.1	102/110*	121	123	2/2%	line LUZ LSP to KRAMER 230 ck 1
ELDORDO 230/115-kV BANK No.1	102/110*	120	123	3/3%	line MOGEN to HOLGATE 115 ck 1
ELDORDO 230/115-kV BANK No.1	102/110*	122	125	3/3%	line OXBOW B to GRNB_TAP 230 ck 1
ELDORDO 230/115-kV BANK No.1	102/110*	122	125	3/3%	line KRAMER-INYOKERN-RANDSB 115 ck 1
ELDORDO 230/115-kV BANK No.1	102/110*	126	129	3/3%	line EDWARDS-HOLGATE-SOUTHBS 115 ck 1
ELDORDO 230/115-kV BANK No.1	102/110*	122	125	3/3%	line LUZ8 to LUZ LSP 230 ck 1
ELDORDO 230/115-kV BANK No.1	102/110*	122	125	3/3%	line LUZ9 to LUZ LSP 230 ck 1
ELDORDO 230/115-kV BANK No.1	102/110*	123	125	2/2%	line NAVYCOSO to BLM EAST 230 ck 1
ELDORDO 230/115-kV BANK No.1	102/110*	122	124	2/2%	line CAL GEN to INYOKERN 115 ck 1
ELDORDO 230/115-kV BANK No.1	102/110*	127	130	3/3%	TRAN KRAMER 230 to KRAMER 115 ck 1
ELDORDO 230/115-kV BANK No.1	102/110*	127	130	3/3%	TRAN KRAMER 230 to KRAMER 115 ck 2
ELDORDO 230/115-kV BANK No.1	102/110*	122	125	3/3%	TRAN OXBOW B 230 to OXBOW B 115 ck 1
ELDORDO 230/115-kV BANK No.1	102/110*	123	125	2/2%	TRAN NAVYCOSO 230 to NAVY II 115 ck 1
ELDORDO 230/115-kV BANK No.1	102/110*	136	143	7/6%	TRAN LUGO 500 to LUGO 230 ck 1
ELDORDO 230/115-kV BANK No.1	102/110*	136	144	8/7%	TRAN LUGO 500 to LUGO 230 ck 2
LUGO 500/230-kV BANK No. 1	1120/1230*	1337	1603	266/22%	Base system (n-0)
LUGO 500/230-kV BANK No. 1	1120/1230*	1350	1613	266/22%	line ELDORDO to LUGO 500 ck 1
LUGO 500/230-kV BANK No. 1	1120/1230*	1376	1639	263/21%	line LUGO to VICTORVL 500 ck 1
LUGO 500/230-kV BANK No. 1	1120/1230*	1256	1524	268/22%	line PISGAH to Lugo 230 ck 1
LUGO 500/230-kV BANK No. 1	1120/1230*	1250	1517	267/22%	line WESTFRY to LUGO 230 ck 2
LUGO 500/230-kV BANK No. 1	1120/1230*	1264	1533	269/22%	line WESTFRY to PISGAH 230 ck 2
LUGO 500/230-kV BANK No. 1	1120/1230*	1385	1656	271/22%	line PISGAH to ELDORDO 230 ck 2
LUGO 500/230-kV BANK No. 1	1120/1230*	1256	1524	268/22%	line PISGAH to LUGO 230 ck 1
LUGO 500/230-kV BANK No. 1	1120/1230*	1386	1657	271/22%	line PISGAH to CIMA 230 ck 1
LUGO 500/230-kV BANK No. 1	1120/1230*	1383	1655	272/22%	line CIMA to ELDORDO 230 ck 1
LUGO 500/230-kV BANK No. 1	1120/1230*	1278	1544	266/22%	line VICTOR-SOPPORT-BLKMTN 115 ck 1
LUGO 500/230-kV BANK No. 1	1120/1230*	1355	1621	266/22%	line PERMANTE to COTNWD 115 ck 1
LUGO 500/230-kV BANK No. 1	1120/1230*	1322	1588	266/22%	line KRAMER to LUGO 230 ck 1
LUGO 500/230-kV BANK No. 1	1120/1230*	1322	1588	266/22%	line KRAMER to LUGO 230 ck 2
LUGO 500/230-kV BANK No. 1	1120/1230*	1260	1527	267/22%	line KRAMER to SUNGEN 115 ck 1
LUGO 500/230-kV BANK No. 1	1120/1230*	1281	1548	267/22%	line BLM EAST to BLM WEST 230 ck 1
LUGO 500/230-kV BANK No. 1	1120/1230*	1271	1537	266/22%	line BLM WEST to KRAMER 230 ck 1
LUGO 500/230-kV BANK No. 1	1120/1230*	1318	1584	266/22%	line COLWATER-SEG2-TORTILLA 115 ck 1
LUGO 500/230-kV BANK No. 1	1120/1230*	1314	1581	267/22%	line OXBOW B to CONTROL 115 ck 1
LUGO 500/230-kV BANK No. 1	1120/1230*	1321	1587	266/22%	line HOLGATE to KRAMER 115 ck 1
LUGO 500/230-kV BANK No. 1	1120/1230*	1263	1530	267/22%	line LUZ LSP to KRAMER 230 ck 1
LUGO 500/230-kV BANK No. 1	1120/1230*	1290	1557	267/22%	line MOGEN to HOLGATE 115 ck 1
LUGO 500/230-kV BANK No. 1	1120/1230*	1314	1581	267/22%	line OXBOW B to GRNB_TAP 230 ck 1
LUGO 500/230-kV BANK No. 1	1120/1230*	1314	1580	266/22%	line KRAMER-INYOKERN-RANDSB 115 ck 1
LUGO 500/230-kV BANK No. 1	1120/1230*	1357	1622	265/22%	line EDWARDS-HOLGATE-SOUTHBS 115 ck 1
LUGO 500/230-kV BANK No. 1	1120/1230*	1300	1567	267/22%	line LUZ8 to LUZ LSP 230 ck 1
LUGO 500/230-kV BANK No. 1	1120/1230*	1300	1567	267/22%	line LUZ9 to LUZ LSP 230 ck 1

2010 Light Spring N-2 condition

Affected Elements	Normal/ Emergency Ratings	Pre-Project Loading	Post-Project Loading	Impact/ Percentage	Contingency Description
ELDORDO 230/115-kV BANK No.1	102/110*	127	130	3/3%	VICTOR 230.00 - LUGO 230.00 1AND VICTOR 230.00 - LUGO 230.00 2
ELDORDO 230/115-kV BANK No.1	102/110*	121	125	4/4%	ELDORDO 500.00 - LUGO 500.00 1AND PISGAH 230.00 - ELDORDO 230.00 2
ELDORDO 230/115-kV BANK No.1	102/110*	117	120	3/3%	ELDORDO 500.00 - LUGO 500.00 1AND PISGAH 230.00 - LUGO 230.00 1
ELDORDO 230/115-kV BANK No.1	102/110*	126	129	3/3%	LUGO 500.00 - MIRALOMA 500.00 2AND LUGO 500.00 - MIRALOMA 500.00 3
ELDORDO 230/115-kV BANK No.1	102/110*	119	122	3/3%	LUGO 500.00 - MOHAVE 500.00 1AND PISGAH 230.00 - LUGO 230.00 1
ELDORDO 230/115-kV BANK No.1	102/110*	126	129	3/3%	LUGO 500.00 - VINCENT 500.00 1AND LUGO 500.00 - VINCENT 500.00 2
ELDORDO 230/115-kV BANK No.1	102/110*	122	126	4/4%	MOHAVE 500.00 - ELDORDO 500.00 1AND PISGAH 230.00 - ELDORDO 230.00 2
ELDORDO 230/115-kV BANK No.1	102/110*	125	128	3/3%	MEAD S 230.00 - ELDORDO 230.00 2AND PISGAH 230.00 - ELDORDO 230.00 2
ELDORDO 230/115-kV BANK No.1	102/110*	125	128	3/3%	CIMA 230.00 - ELDORDO 230.00 1AND MEAD S 230.00 - ELDORDO 230.00 1
ELDORDO 230/115-kV BANK No.1	102/110*	122	125	3/3%	LUGO 500.00 - MIRALOMA 500.00 3AND LUGO 500.00 - MOHAVE 500.00 1
ELDORDO 230/115-kV BANK No.1	102/110*	121	124	3/3%	ELDORDO 500.00 - LUGO 500.00 1AND LUGO 500.00 - MIRALOMA 500.00 2
ELDORDO 230/115-kV BANK No.1	102/110*	117	121	4/4%	LUGO 500.00 - VINCENT 500.00 2AND LUGO 500.00 - VICTORVL 500.00 1
ELDORDO 230/115-kV BANK No.1	102/110*	138	141	3/3%	KRAMER 230.00 - LUGO 230.00 1AND PISGAH 230.00 - LUGO 230.00 1
ELDORDO 230/115-kV BANK No.1	102/110*	116	119	3/3%	VICTORVILLE - MCCULLOUGH 500.00 1AND VICTORVILLE - MCCULLOUGH 500.00 2
LUGO 500/230-kV BANK No. 1	1120/1230*	Not Converge withour existing RAS	1615	-	VICTOR 230.00 - LUGO 230.00 1AND VICTOR 230.00 - LUGO 230.00 2
LUGO 500/230-kV BANK No. 1	1120/1230*	1390	1669	279/23%	ELDORDO 500.00 - LUGO 500.00 1AND PISGAH 230.00 - ELDORDO 230.00 2
LUGO 500/230-kV BANK No. 1	1120/1230*	1261	1529	268/22%	ELDORDO 500.00 - LUGO 500.00 1AND PISGAH 230.00 - LUGO 230.00 1
LUGO 500/230-kV BANK No. 1	1120/1230*	1312	1575	263/21%	LUGO 500.00 - MIRALOMA 500.00 2AND LUGO 500.00 - MIRALOMA 500.00 3
LUGO 500/230-kV BANK No. 1	1120/1230*	1251	1521	270/22%	LUGO 500.00 - MOHAVE 500.00 1AND PISGAH 230.00 - LUGO 230.00 1
LUGO 500/230-kV BANK No. 1	1120/1230*	1286	1551	265/22%	LUGO 500.00 - VINCENT 500.00 1AND LUGO 500.00 - VINCENT 500.00 2
LUGO 500/230-kV BANK No. 1	1120/1230*	1380	1652	272/22%	MOENKOPI 500.00 - ELDORDO 500.00 1AND PISGAH 230.00 - ELDORDO 230.00 2
LUGO 500/230-kV BANK No. 1	1120/1230*	1391	1664	273/22%	MOHAVE 500.00 - ELDORDO 500.00 1AND PISGAH 230.00 - ELDORDO 230.00 2
LUGO 500/230-kV BANK No. 1	1120/1230*	1385	1656	271/22%	MEAD S 230.00 - ELDORDO 230.00 2AND PISGAH 230.00 - ELDORDO 230.00 2
LUGO 500/230-kV BANK No. 1	1120/1230*	1383	1655	272/22%	CIMA 230.00 - ELDORDO 230.00 1AND MEAD S 230.00 - ELDORDO 230.00 1
LUGO 500/230-kV BANK No. 1	1120/1230*	1359	1623	264/21%	LUGO 500.00 - VINCENT 500.00 2AND LUGO 500.00 - VICTORVL 500.00 1
LUGO 500/230-kV BANK No. 1	1120/1230*	1241	1513	272/22%	KRAMER 230.00 - LUGO 230.00 1AND PISGAH 230.00 - LUGO 230.00 1
LUGO 500/230-kV BANK No. 1	1120/1230*	1354	1623	269/22%	VICTORVILLE - MCCULLOUGH 500.00 1AND VICTORVILLE - MCCULLOUGH 500.00 2
LUGO 500/230-kV BANK No. 2	1120/1230*	Not Converge withour existing RAS	1627	-	VICTOR 230.00 - LUGO 230.00 1AND VICTOR 230.00 - LUGO 230.00 2
LUGO 500/230-kV BANK No. 2	1120/1230*	1400	1681	281/23%	ELDORDO 500.00 - LUGO 500.00 1AND PISGAH 230.00 - ELDORDO 230.00 2
LUGO 500/230-kV BANK No. 2	1120/1230*	1270	1540	270/22%	ELDORDO 500.00 - LUGO 500.00 1AND PISGAH 230.00 - LUGO 230.00 1
LUGO 500/230-kV BANK No. 2	1120/1230*	1322	1586	264/21%	LUGO 500.00 - MIRALOMA 500.00 2AND LUGO 500.00 - MIRALOMA 500.00 3
LUGO 500/230-kV BANK No. 2	1120/1230*	1260	1532	272/22%	LUGO 500.00 - MOHAVE 500.00 1AND PISGAH 230.00 - LUGO 230.00 1
LUGO 500/230-kV BANK No. 2	1120/1230*	1295	1563	268/22%	LUGO 500.00 - VINCENT 500.00 1AND LUGO 500.00 - VINCENT 500.00 2
LUGO 500/230-kV BANK No. 2	1120/1230*	1390	1664	274/22%	MOENKOPI 500.00 - ELDORDO 500.00 1AND PISGAH 230.00 - ELDORDO 230.00 2
LUGO 500/230-kV BANK No. 2	1120/1230*	1401	1676	275/22%	MOHAVE 500.00 - ELDORDO 500.00 1AND PISGAH 230.00 - ELDORDO 230.00 2
LUGO 500/230-kV BANK No. 2	1120/1230*	1395	1668	273/22%	MEAD S 230.00 - ELDORDO 230.00 2AND PISGAH 230.00 - ELDORDO 230.00 2
LUGO 500/230-kV BANK No. 2	1120/1230*	1393	1666	273/22%	CIMA 230.00 - ELDORDO 230.00 1AND MEAD S 230.00 - ELDORDO 230.00 1
LUGO 500/230-kV BANK No. 2	1120/1230*	1368	1635	267/22%	LUGO 500.00 - VINCENT 500.00 2AND LUGO 500.00 - VICTORVL 500.00 1
LUGO 500/230-kV BANK No. 2	1120/1230*	1250	1524	274/22%	KRAMER 230.00 - LUGO 230.00 1AND PISGAH 230.00 - LUGO 230.00 1
LUGO 500/230-kV BANK No. 2	1120/1230*	1363	1634	271/22%	VICTORVILLE - MCCULLOUGH 500.00 1AND VICTORVILLE - MCCULLOUGH 500.00 2
INYO 115-KV PHASE SHIFTER	56/62*	81	86	5/8%	VICTOR 230.00 - LUGO 230.00 1AND VICTOR 230.00 - LUGO 230.00 2
INYO 115-KV PHASE SHIFTER	56/62*	81	84	3/5%	ELDORDO 500.00 - LUGO 500.00 1AND PISGAH 230.00 - ELDORDO 230.00 2
INYO 115-KV PHASE SHIFTER	56/62*	79	82	3/5%	ELDORDO 500.00 - LUGO 500.00 1AND PISGAH 230.00 - LUGO 230.00 1
INYO 115-KV PHASE SHIFTER	56/62*	81	85	4/6%	LUGO 500.00 - MIRALOMA 500.00 2AND LUGO 500.00 - MIRALOMA 500.00 3
INYO 115-KV PHASE SHIFTER	56/62*	79	82	3/5%	LUGO 500.00 - MOHAVE 500.00 1AND PISGAH 230.00 - LUGO 230.00 1
INYO 115-KV PHASE SHIFTER	56/62*	86	91	5/8%	LUGO 500.00 - VINCENT 500.00 1AND LUGO 500.00 - VINCENT 500.00 2
INYO 115-KV PHASE SHIFTER	56/62*	81	84	3/5%	MOENKOPI 500.00 - ELDORDO 500.00 1AND PISGAH 230.00 - ELDORDO 230.00 2
INYO 115-KV PHASE SHIFTER	56/62*	81	84	3/5%	MOHAVE 500.00 - ELDORDO 500.00 1AND PISGAH 230.00 - ELDORDO 230.00 2
INYO 115-KV PHASE SHIFTER	56/62*	80	84	4/6%	MEAD S 230.00 - ELDORDO 230.00 2AND PISGAH 230.00 - ELDORDO 230.00 2
INYO 115-KV PHASE SHIFTER	56/62*	80	84	4/6%	CIMA 230.00 - ELDORDO 230.00 1AND MEAD S 230.00 - ELDORDO 230.00 1
INYO 115-KV PHASE SHIFTER	56/62*	80	84	4/6%	LUGO 500.00 - MIRALOMA 500.00 3AND LUGO 500.00 - MOHAVE 500.00 1
INYO 115-KV PHASE SHIFTER	56/62*	72	76	4/6%	LUGO 500.00 - VINCENT 500.00 2AND LUGO 500.00 - VICTORVL 500.00 1
INYO 115-KV PHASE SHIFTER	56/62*	93	97	4/6%	KRAMER 230.00 - LUGO 230.00 1AND PISGAH 230.00 - LUGO 230.00 1
INYO 115-KV PHASE SHIFTER	56/62*	82	86	4/6%	VICTORVILLE - MCCULLOUGH 500.00 1AND VICTORVILLE - MCCULLOUGH 500.00 2
INYO 115-KV PHASE SHIFTER	56/62*	Not Converge without existing RAS	Not Converge without existing RAS	-	CONTROL 115.00 - INYOKERN 115.00 1 AND CONTROL115.00 - INYOKERN 115.00 2
ELDORADO-MOUNTAIN PASS 115-kV LINE No.1	415/530**	Not Converge withour existing RAS	616	-	VICTOR 230.00 - LUGO 230.00 1AND VICTOR 230.00 - LUGO 230.00 2
ELDORADO-MOUNTAIN PASS 115-kV LINE No.1	415/530**	573	593	20/4%	ELDORDO 500.00 - LUGO 500.00 1AND PISGAH 230.00 - ELDORDO 230.00 2
ELDORADO-MOUNTAIN PASS 115-kV LINE No.1	415/530**	556	572	16/3%	ELDORDO 500.00 - LUGO 500.00 1AND PISGAH 230.00 - LUGO 230.00 1
ELDORADO-MOUNTAIN PASS 115-kV LINE No.1	415/530**	595	612	17/3%	LUGO 500.00 - MIRALOMA 500.00 2AND LUGO 500.00 - MIRALOMA 500.00 3
ELDORADO-MOUNTAIN PASS 115-kV LINE No.1	415/530**	565	582	17/3%	LUGO 500.00 - MOHAVE 500.00 1AND PISGAH 230.00 - LUGO 230.00 1
ELDORADO-MOUNTAIN PASS 115-kV LINE No.1	415/530**	599	622	23/4%	LUGO 500.00 - VINCENT 500.00 1AND LUGO 500.00 - VINCENT 500.00 2

2010 Light Spring with a third Lugo 500/230-kV AA bank N-1 Condition

Affected Elements	*Normal/ Emergency Ratings (Amps)*	*Post-Project Loading (Amps)*	*Post-Project with a third Lugo AA tranformer Bank Loading (Amps)*	*Impact/ Percentage*	*Contingency Description*
Lugo-Westfry 230-kV Line No. 2	726	**802**	**857**	55/8%	Base system (n-0)
Lugo-Westfry 230-kV Line No. 2	726	**831**	**887**	56/8%	LINE PALOVRDE to DEVERS 500 ck 1
Lugo-Westfry 230-kV Line No. 2	726	**861**	**918**	57/8%	LINE ELDORDO to LUGO 500 ck 1
Lugo-Westfry 230-kV Line No. 2	726	**838**	**895**	57/8%	LINE LUGO to MOHAVE 500 ck 1
Lugo-Westfry 230-kV Line No. 2	726	**913**	**970**	57/8%	LINE LUGO to VICTORVL 500 ck 1
Lugo-Westfry 230-kV Line No. 2	726	**1192**	**1278**	86/12%	LINE PISGAH to Lugo 230 ck 1
Lugo-Westfry 230-kV Line No. 2	726	**959**	**984**	25/3%	LINE PISGAH to ELDORDO 230 ck 2
Lugo-Westfry 230-kV Line No. 2	726	**1192**	**1278**	86/12%	LINE PISGAH to LUGO 230 ck 1
Lugo-Westfry 230-kV Line No. 2	726	**960**	**985**	25/3%	LINE PISGAH to CIMA 230 ck 1
Lugo-Westfry 230-kV Line No. 2	726	**946**	**972**	26/4%	LINE CIMA to ELDORDO 230 ck 1
Lugo-Westfry 230-kV Line No. 2	726	**814**	**866**	52/7%	LINE KRAMER to LUGO 230 ck 1
Lugo-Westfry 230-kV Line No. 2	726	**814**	**866**	52/7%	LINE KRAMER to LUGO 230 ck 2
Lugo-Westfry 230-kV Line No. 2	726	**793**	**848**	55/8%	LINE COLWATER-DUNN-BAK-MNTPS-ELDORADO 115 ck 1
Lugo-Westfry 230-kV Line No. 2	726	674	**805**	131/18%	TRAN LUGO 500 to LUGO 230 ck 1
Lugo-Westfry 230-kV Line No. 2	726	674	**804**	130/18%	TRAN LUGO 500 to LUGO 230 ck 2
Lugo-Westfry 230-kV Line No. 2	726	**810**	**865**	55/8%	TRAN Eldorado 500 to Eldorado 230 ck 1
Lugo-Westfry 230-kV Line No. 2	726	**810**	**865**	55/8%	TRAN Eldorado 500 to Eldorado 230 ck 2
Lugo-Pisgah 230-kV Line No. 1	726	**747**	**804**	57/8%	Base system (n-0)
Lugo-Pisgah 230-kV Line No. 1	726	**776**	**834**	58/8%	LINE PALOVRDE to DEVERS 500 ck 1
Lugo-Pisgah 230-kV Line No. 1	726	**806**	**865**	59/8%	LINE ELDORDO to LUGO 500 ck 1
Lugo-Pisgah 230-kV Line No. 1	726	**783**	**842**	59/8%	LINE LUGO to MOHAVE 500 ck 1
Lugo-Pisgah 230-kV Line No. 1	726	**858**	**917**	59/8%	LINE LUGO to VICTORVL 500 ck 1
Lugo-Pisgah 230-kV Line No. 1	726	**1182**	**1270**	88/12%	LINE WESTFRY to LUGO 230 ck 2
Lugo-Pisgah 230-kV Line No. 1	726	**1085**	**1172**	87/12%	LINE WESTFRY to PISGAH 230 ck 2
Lugo-Pisgah 230-kV Line No. 1	726	**908**	**933**	25/3%	LINE PISGAH to ELDORDO 230 ck 2
Lugo-Pisgah 230-kV Line No. 1	726	**909**	**934**	25/3%	LINE PISGAH to CIMA 230 ck 1
Lugo-Pisgah 230-kV Line No. 1	726	**894**	**921**	27/4%	LINE CIMA to ELDORDO 230 ck 1
Lugo-Pisgah 230-kV Line No. 1	726	**759**	**812**	53/7%	LINE KRAMER to LUGO 230 ck 1
Lugo-Pisgah 230-kV Line No. 1	726	**759**	**812**	53/7%	LINE KRAMER to LUGO 230 ck 2
Lugo-Pisgah 230-kV Line No. 1	726	**738**	**795**	57/8%	LINE COLWATER-DUNN-BAK-MNTPS-ELDORADO 115 ck 1
Lugo-Pisgah 230-kV Line No. 1	726	615	**750**	135/19%	TRAN LUGO 500 to LUGO 230 ck 1
Lugo-Pisgah 230-kV Line No. 1	726	615	**750**	135/19%	TRAN LUGO 500 to LUGO 230 ck 2
Lugo-Pisgah 230-kV Line No. 1	726	**755**	**812**	57/8%	TRAN Eldorado 500 to Eldorado 230 ck 1
Lugo-Pisgah 230-kV Line No. 1	726	**755**	**812**	57/8%	TRAN Eldorado 500 to Eldorado 230 ck 2
Pisgah-Westfry 230-kV Line No.2	726	**747**	**804**	57/8%	Base system (n-0)
Pisgah-Westfry 230-kV Line No.2	726	688	**746**	58/8%	LINE PALOVRDE to DEVERS 500 ck 1
Pisgah-Westfry 230-kV Line No.2	726	717	**777**	60/8%	LINE ELDORDO to LUGO 500 ck 1
Pisgah-Westfry 230-kV Line No.2	726	695	**754**	59/8%	LINE LUGO to MOHAVE 500 ck 1
Pisgah-Westfry 230-kV Line No.2	726	**769**	**829**	60/8%	LINE LUGO to VICTORVL 500 ck 1
Pisgah-Westfry 230-kV Line No.2	726	**1049**	**1136**	87/12%	LINE PISGAH to Lugo 230 ck 1
Pisgah-Westfry 230-kV Line No.2	726	**816**	**843**	27/4%	LINE PISGAH to ELDORDO 230 ck 2
Pisgah-Westfry 230-kV Line No.2	726	**1049**	**1136**	87/12%	LINE PISGAH to LUGO 230 ck 1
Pisgah-Westfry 230-kV Line No.2	726	**817**	**844**	27/4%	LINE PISGAH to CIMA 230 ck 1
Pisgah-Westfry 230-kV Line No.2	726	**804**	**832**	28/4%	LINE CIMA to ELDORDO 230 ck 1

2010 Light Spring with a third Lugo 500/230-kV AA bank N-2 Condition

Affected Elements	*Normal/ Emergency Ratings (Amps)*	*Post-Project Loading (Amps)*	*Post-Project with a third Lugo AA tranformer Bank Loading (Amps)*	*Impact/ Percentage*	*Contingency Description*
Lugo-Westfry 230-kV Line No. 2	726	**1032**	**1036**	4/1%	ELDORDO 500.00 - LUGO 500.00 1, PISGAH 230.00 - ELDORDO 230.00 2
Lugo-Westfry 230-kV Line No. 2	726	**1294**	**1384**	90/12%	ELDORDO 500.00 - LUGO 500.00 1, PISGAH 230.00 - LUGO 230.00 1
Lugo-Westfry 230-kV Line No. 2	726	**786**	**842**	56/8%	LUGO 500.00 - MIRALOMA 500.00 2, LUGO 500.00 - MIRALOMA 500.00 3
Lugo-Westfry 230-kV Line No. 2	726	**1263**	**1351**	88/12%	LUGO 500.00 - MOHAVE 500.00 1, PISGAH 230.00 - LUGO 230.00 1
Lugo-Westfry 230-kV Line No. 2	726	**963**	**983**	20/3%	MOENKOPI 500.00 - ELDORDO 500.00 1, PISGAH 230.00 - ELDORDO 230.00 2
Lugo-Westfry 230-kV Line No. 2	726	**995**	**1013**	18/2%	MOHAVE 500.00 - ELDORDO 500.00 1, PISGAH 230.00 - ELDORDO 230.00 2
Lugo-Westfry 230-kV Line No. 2	726	**959**	**984**	25/3%	MEAD S 230.00 - ELDORDO 230.00 2, PISGAH 230.00 - ELDORDO 230.00 2
Lugo-Westfry 230-kV Line No. 2	726	**946**	**972**	26/4%	CIMA 230.00 - ELDORDO 230.00 1, MEAD S 230.00 - ELDORDO 230.00 1
Lugo-Westfry 230-kV Line No. 2	726	**835**	**891**	56/8%	LUGO 500.00 - MIRALOMA 500.00 3, LUGO 500.00 - MOHAVE 500.00 1
Lugo-Westfry 230-kV Line No. 2	726	**856**	**913**	57/8%	ELDORDO 500.00 - LUGO 500.00 1, LUGO 500.00 - MIRALOMA 500.00 2
Lugo-Westfry 230-kV Line No. 2	726	**907**	**962**	55/8%	LUGO 500.00 - VINCENT 500.00 2, LUGO 500.00 - VICTORVL 500.00 1
Lugo-Westfry 230-kV Line No. 2	726	**1225**	**1298**	73/10%	KRAMER 230.00 - LUGO 230.00 1, PISGAH 230.00 - LUGO 230.00 1
Lugo-Westfry 230-kV Line No. 2	726	**908**	**964**	56/8%	VICTORVILLE - MCCULLOUGH 500.00 1 AND VICTORVILLE - MCCULLOUGH 500.00 2
Lugo-Pisgah 230-kV Line No. 1	726	**980**	**986**	6/1%	ELDORDO 500.00 - LUGO 500.00 1, PISGAH 230.00 - ELDORDO 230.00 2
Lugo-Pisgah 230-kV Line No. 1	726	**730**	**788**	58/8%	LUGO 500.00 - MIRALOMA 500.00 2, LUGO 500.00 - MIRALOMA 500.00 3
Lugo-Pisgah 230-kV Line No. 1	726	**732**	**790**	58/8%	LUGO 500.00 - VINCENT 500.00 1, LUGO 500.00 - VINCENT 500.00 2
Lugo-Pisgah 230-kV Line No. 1	726	**912**	**933**	21/3%	MOENKOPI 500.00 - ELDORDO 500.00 1, PISGAH 230.00 - ELDORDO 230.00 2
Lugo-Pisgah 230-kV Line No. 1	726	**944**	**963**	19/3%	MOHAVE 500.00 - ELDORDO 500.00 1, PISGAH 230.00 - ELDORDO 230.00 2
Lugo-Pisgah 230-kV Line No. 1	726	**908**	**933**	25/3%	MEAD S 230.00 - ELDORDO 230.00 2, PISGAH 230.00 - ELDORDO 230.00 2
Lugo-Pisgah 230-kV Line No. 1	726	**894**	**920**	26/4%	CIMA 230.00 - ELDORDO 230.00 1, MEAD S 230.00 - ELDORDO 230.00 1
Lugo-Pisgah 230-kV Line No. 1	726	**779**	**837**	58/8%	LUGO 500.00 - MIRALOMA 500.00 3, LUGO 500.00 - MOHAVE 500.00 1
Lugo-Pisgah 230-kV Line No. 1	726	**801**	**859**	58/8%	ELDORDO 500.00 - LUGO 500.00 1, LUGO 500.00 - MIRALOMA 500.00 2
Lugo-Pisgah 230-kV Line No. 1	726	**852**	**909**	57/8%	LUGO 500.00 - VINCENT 500.00 2, LUGO 500.00 - VICTORVL 500.00 1
Lugo-Pisgah 230-kV Line No. 1	726	**853**	**911**	58/8%	VICTORVILLE - MCCULLOUGH 500.00 1 AND VICTORVILLE - MCCULLOUGH 500.00 2
Pisgah-Westfry 230-kV Line No.2	726	**885**	**894**	9/1%	ELDORDO 500.00 - LUGO 500.00 1, PISGAH 230.00 - ELDORDO 230.00 2
Pisgah-Westfry 230-kV Line No.2	726	**1147**	**1239**	92/13%	ELDORDO 500.00 - LUGO 500.00 1, PISGAH 230.00 - LUGO 230.00 1
Pisgah-Westfry 230-kV Line No.2	726	**1117**	**1206**	89/12%	LUGO 500.00 - MOHAVE 500.00 1, PISGAH 230.00 - LUGO 230.00 1
Pisgah-Westfry 230-kV Line No.2	726	**819**	**842**	23/3%	MOENKOPI 500.00 - ELDORDO 500.00 1, PISGAH 230.00 - ELDORDO 230.00 2
Pisgah-Westfry 230-kV Line No.2	726	**851**	**872**	21/3%	MOHAVE 500.00 - ELDORDO 500.00 1, PISGAH 230.00 - ELDORDO 230.00 2
Pisgah-Westfry 230-kV Line No.2	726	**816**	**843**	27/4%	MEAD S 230.00 - ELDORDO 230.00 2, PISGAH 230.00 - ELDORDO 230.00 2
Pisgah-Westfry 230-kV Line No.2	726	**804**	**832**	28/4%	CIMA 230.00 - ELDORDO 230.00 1, MEAD S 230.00 - ELDORDO 230.00 1
Pisgah-Westfry 230-kV Line No.2	726	691	**749**	58/8%	LUGO 500.00 - MIRALOMA 500.00 3, LUGO 500.00 - MOHAVE 500.00 1
Pisgah-Westfry 230-kV Line No.2	726	712	**771**	59/8%	ELDORDO 500.00 - LUGO 500.00 1, LUGO 500.00 - MIRALOMA 500.00 2
Pisgah-Westfry 230-kV Line No.2	726	**761**	**819**	58/8%	LUGO 500.00 - VINCENT 500.00 2, LUGO 500.00 - VICTORVL 500.00 1
Pisgah-Westfry 230-kV Line No.2	726	**1079**	**1154**	75/10%	KRAMER 230.00 - LUGO 230.00 1, PISGAH 230.00 - LUGO 230.00 1
Pisgah-Westfry 230-kV Line No.2	726	**762**	**821**	59/8%	VICTORVILLE - MCCULLOUGH 500.00 1 AND VICTORVILLE - MCCULLOUGH 500.00 2

APPENDIX C

LIST OF POWER FLOW CONTINGENCIES

```
# NORTH OF LUGO N-1 AND N-2 CONTINGENCIES
line_4000        "line HIDESERT to VICTOR   230 ck 1"
 line "HIDESERT 230.00"  "VICTOR   230.00"  "1 "  1 0

line_4000        "line HIDESERT to VICTOR   230 ck 2"
 line "HIDESERT 230.00"  "VICTOR   230.00"  "2 "  1 0

line_4001        "line VICTOR   to LUGO     230 ck 1"
 line "VICTOR   230.00"  "LUGO     230.00"  "1 "  1 0

line_4002        "line VICTOR   to LUGO     230 ck 2"
 line "VICTOR   230.00"  "LUGO     230.00"  "2 "  1 0

line_4003        "line VICTOR   to PHELAN   115 ck 1"
 line "VICTOR   115.00"  "PHELAN   115.00"  "1 "  1 0

line_4004        "line VICTOR   to SAVAGE   115 ck 1"
 line "VICTOR   115.00"  "SAVAGE   115.00"  "1 "  1 0

line_4005        "line SAVAGE   to COTNWD   115 ck 1"
 line "SAVAGE   115.00"  "CONTWD   115.00"  "1 "  1 0

line_4006        "line VICTOR-ROADWAY-KRAMER   115 ck 1"
 line "VICTOR   115.00"  "TAP601   115.00"  "1 "  1 0
 line "TAP601   115.00"  "ROADWAY  115.00"  "1 "  1 0
 line "TAP601   115.00"  "KRAMER   115.00"  "1 "  1 0

line_4007        "line VICTOR-SOPPORT-BLKMTN   115 ck 1"
 line "VICTOR   115.00"  "TAP602   115.00"  "1 "  1 0
 line "TAP602   115.00"  "SOPPORT  115.00"  "1 "  1 0
 line "TAP602   115.00"  "TAP603   115.00"  "1 "  1 0
 line "TAP603   115.00"  "BLKMTN   115.00"  "1 "  1 0

line_4008        "line VICTOR-APPLEVAL-HESPERIA   115 ck 1"
 line "VICTOR   115.00"  "TAP606   115.00"  "1 "  1 0
 line "TAP606   115.00"  "APPLEVAL 115.00"  "1 "  1 0
 line "TAP606   115.00"  "HESPERIA 115.00"  "1 "  1 0

line_4009        "line VICTOR-AQUEDUCT-HESPERIA   115 ck 1"
 line "VICTOR   115.00"  "TAP607   115.00"  "1 "  1 0
 line "TAP607   115.00"  "AQUEDUCT 115.00"  "1 "  1 0
 line "TAP607   115.00"  "HESPERIA 115.00"  "1 "  1 0

line_4010        "line VICTOR-AQUEDUCT-PHELAN   115 ck 1"
 line "VICTOR   115.00"  "TAP608   115.00"  "1 "  1 0
 line "TAP608   115.00"  "AQUEDUCT 115.00"  "1 "  1 0
 line "TAP608   115.00"  "PHELAN   115.00"  "1 "  1 0

line_4011        "line VICTOR   to KRAMER   115 ck 1"
 line "VICTOR   115.00"  "KRAMER   115.00"  "1 "  1 0

line_4012        "line SAVAGE-APPLE-PLEUSS-COTNWD   115 ck 1"
 line "SAVAGE   115.00"  "TAP605   115.00"  "1 "  1 0
 line "TAP605   115.00"  "APPLEVAL 115.00"  "1 "  1 0
 line "TAP605   115.00"  "TAP604   115.00"  "1 "  1 0
 line "TAP604   115.00"  "PLEUSS   115.00"  "1 "  1 0
 line "TAP604   115.00"  "COTNWD   115.00"  "1 "  1 0
```

```
line_4013        "line AFG IND  to SAVAGE   115 ck 1"
 line "AFG IND  115.00"  "SAVAGE   115.00"  "1 "  1 0

line_4029        "line PERMANTE to COTNWD   115 ck 1"
 line "PERMANTE 115.00"  "COTNWD   115.00"  "1 "  1 0

line_4030        "line GOLDHILL to COTNWD   115 ck 1"
 line     24623    24613  "1 "  1 0

line_4031        "line KRAMER   to LUGO     230 ck 1"
 line "KRAMER   230.00"  "LUGO     230.00"  "1 "  1 0

line_4032        "line KRAMER   to LUGO     230 ck 2"
 line "KRAMER   230.00"  "LUGO     230.00"  "2 "  1 0

line_4033        "line KRAMER   to COLWATER 230 ck 1"
 line "KRAMER   230.00"  "COLWATER 230.00"  "1 "  1 0

line_4034        "line KRAMER   to COLWATER 230 ck 2"
 line "KRAMER   230.00"  "COLWATER 230.00"  "2 "  1 0

line_4035        "line KRAMER   to COLWATER 115 ck 1"
 line "KRAMER   115.00"  "COLWATER 115.00"  "1 "  1 0

line_4036        "line KRAMER   to SUNGEN   115 ck 1"
 line "KRAMER   115.00"  "SUNGEN   115.00"  "1 "  1 0

line_4037        "line KRAMER   to TORTILLA 115 ck 1"
 line "KRAMER   115.00"  "TORTILLA 115.00"  "1 "  1 0

line_4038        "line KRAMER   to ROCKET   115 ck 1"
 line "KRAMER   115.00"  "ROCKET   115.00"  "1 "  1 0

line_4039        "line BLM EAST to BLM WEST 230 ck 1"
 line "BLM EAST 230.00"  "BLM WEST 230.00"  "1 "  1 0

line_4040        "line BLM WEST to KRAMER   230 ck 1"
 line "BLM WEST 230.00"  "KRAMER   230.00"  "1 "  1 0

line_4041        "line COLWATER-SEG2-TORTILLA   115 ck 1"
 line "COLWATER 115.00"  "TAP705   115.00"  "1 "  1 0
 line "SEGS2    115.00"  "TAP705   115.00"  "1 "  1 0
 line "TORTILLA 115.00"  "TAP705   115.00"  "1 "  1 0

line_4042        "line COLWATER to GALE     115 ck 1"
 line "COLWATER 115.00"  "GALE     115.00"  "1 "  1 0

line_4043        "line COLWATER to TIEFORT  115 ck 1"
 line "COLWATER 115.00"  "TIEFORT  115.00"  "1 "  1 0

line_4044        "line COLWATER-DUNN-BAK-MNTPS-ELDORADO 115 ck 1"
 line "COLWATER 115.00"  "DUNNSIDE 115.00"  "1 "  1 0
 line "TAP709   115.00"  "ELDORDO  115.00"  "1 "  1 0
 line "TAP709   115.00"  "MTN PAS  115.00"  "1 "  1 0
 line "BAKER    115.00"  "MTN PAS  115.00"  "1 "  1 0
 line "BAKER    115.00"  "DUNNSIDE 115.00"  "1 "  1 0
```

```
line_4045        "line CONTROL  to NEVBD501  55 ck 1"
 line "CONTROL   55.00"  "NEVBD501  55.00"  "1 "  1 0

line_4046        "line CONTROL  to NEVBD502  55 ck 1"
 line "CONTROL   55.00"  "NEVBD502  55.00"  "1 "  1 0

line_4047        "line CONTROL  to INYO     115 ck 1"
 line "CONTROL  115.00"  "INYO     115.00"  "1 "  1 0

line_4048        "line CONTROL  to INYOKERN 115 ck 1"
 line "CONTROL  115.00"  "INYOKERN 115.00"  "1 "  1 0

line_4049        "line CONTROL  to INYOKERN 115 ck 2"
 line "CONTROL  115.00"  "INYOKERN 115.00"  "2 "  1 0

line_4050        "line OXBOW  B to CONTROL  115 ck 1"
 line "OXBOW  B 115.00"  "CONTROL  115.00"  "1 "  1 0
 gens     "OXBOW G1"     "1 "   0

line_4051        "line CSA DIAB to CONTROL  115 ck 1"
 line "CSA DIAB 115.00"  "CONTROL  115.00"  "1 "  1 0

line_4052        "line CSA DIAB to RUSH     115 ck 1"
 line "CSA DIAB 115.00"  "RUSH     115.00"  "1 "  1 0

line_4053        "line HOLGATE  to KRAMER   115 ck 1"
 line "HOLGATE  115.00"  "KRAMER   115.00"  "1 "  1 0

       line_4054        "line INYO     to COTTONWD 230 ck 1"
  line "INYO     230.00"  "COTTONWD 230.00"  "1 "  1 0

line_4055        "line INYOKERN to KRAMER   115 ck 1"
 line "INYOKERN 115.00"  "KRAMER   115.00"  "1 "  1 0

line_4056        "line INYOKERN-SEARLES-MCGEN   115 ck 1"
 line "INYOKERN 115.00"  "TAP702   115.00"  "1 "  1 0
 line "MC GEN   115.00"  "TAP702   115.00"  "1 "  1 0
 line "TAP702   115.00"  "SEARLES  115.00"  "1 "  1 0

line_4057        "line INYOKERN-SEARLES-MCGEN   115 ck 2"
 line "INYOKERN 115.00"  "TAP703   115.00"  "1 "  1 0
 line "MC GEN   115.00"  "TAP703   115.00"  "1 "  1 0
 line "TAP703   115.00"  "SEARLES  115.00"  "1 "  1 0

line_4058        "line LUZ LSP  to KRAMER   230 ck 1"
 line "LUZ LSP  230.00"  "KRAMER   230.00"  "1 "  1 0
 gens     "LUZ8  G "     "8 "   0
 gens     "LUZ9  G "     "9 "   0

line_4061        "line MOGEN    to HOLGATE  115 ck 1"
 line "MOGEN    115.00"  "HOLGATE  115.00"  "1 "  1 0
 gens     "MOGEN  G"     "1 "   0

line_4064        "line OXBOW  B to OXBOW  A 230 ck 1"
 line "OXBOW  B 230.00"  "OXBOW  A 230.00"  "1 "  1 0
 gens     "OXBOW G1"     "1 "   0

line_4065        "line KRAMER-INYOKERN-RANDSB   115 ck 1"
```

```
 line "TAP701   115.00"  "KRAMER   115.00"  "1 "  1 0
 line "TAP701   115.00"  "INYOKERN 115.00"  "1 "  1 0
 line "RANDSBRG 115.00"  "TAP701   115.00"  "1 "  1 0

line_4069        "line CONTROL-SHERWIN-CSA DIAB  115 ck 1"
 line "TAP704   115.00"  "CONTROL  115.00"  "1 "  1 0
 line "TAP704   115.00"  "CSA DIAB 115.00"  "1 "  1 0
 line "TAP704   115.00"  "SHERWIN  115.00"  "1 "  1 0

line_4074        "line EDWARDS-HOLGATE-SOUTHBS  115 ck 1"
 line "EDWARDS  115.00"  "HOLGATE  115.00"  "1 "  1 0
 line "EDWARDS  115.00"  "SOUTHBAS 115.00"  "1 "  1 0

line_4076        "line LEE VINE to RUSH     115 ck 1"
 line "LEE VINE 115.00"  "RUSH     115.00"  "1 "  1 0
 gens     "POOLUWD "     "1 "   0

line_4079        "line LUZ8     to LUZ LSP  230 ck 1"
 line "LUZ8     230.00"  "LUZ LSP  230.00"  "1 "  1 0
 gens     "LUZ8  G "     "8 "   0

line_4080        "line LUZ9     to LUZ LSP  230 ck 1"
 line "LUZ9     230.00"  "LUZ LSP  230.00"  "1 "  1 0
 gens     "LUZ9  G "     "9 "   0

line_4081        "line NAVYCOSO to BLM EAST 230 ck 1"
 line "NAVYCOSO 230.00"  "BLM EAST 230.00"  "1 "  1 0

line_4082        "line CAL GEN  to INYOKERN 115 ck 1"
 line "CAL GEN  115.00"  "INYOKERN 115.00"  "1 "  1 0

line_4083        "line OWENS    to INYO     230 ck 1"
 line "OWENS    230.00"  "INYO     230.00"  "1 "  1 0

tran_4084        "tran VICTOR   230 to VICTOR    115 ck 1"
 tran "VICTOR   230.00"  "VICTOR   115.00"  "1 "  0

tran_4085        "tran VICTOR   230 to VICTOR    115 ck 2"
 tran "VICTOR   230.00"  "VICTOR   115.00"  "2 "  0

tran_4086        "tran KRAMER   230 to KRAMER    115 ck 1"
 tran "KRAMER   230.00"  "KRAMER   115.00"  "1 "  0

tran_4087        "tran KRAMER   230 to KRAMER    115 ck 2"
 tran "KRAMER   230.00"  "KRAMER   115.00"  "2 "  0

tran_4088        "tran CONTROL  115 to CONTROL    55 ck 1"
 tran "CONTROL  115.00"  "CONTROL   55.00"  "1 "  0

tran_4090        "tran INYO     115 to INYO PS   115 ck 1"
 tran "INYO     115.00"  "INYO PS  115.00"  "1 "  0

tran_4091        "tran INYO     230 to INYO PS   115 ck 1"
 tran "INYO     230.00"  "INYO PS  115.00"  "1 "  0

tran_4092        "tran INYO     230 to INYO PS   115 ck 2"
 tran "INYO     230.00"  "INYO PS  115.00"  "2 "  0
```

```
tran_4093         "tran OXBOW  B 230 to OXBOW  B  115 ck 1"
 tran "OXBOW  B 230.00"  "OXBOW  B 115.00"  "1 "  0
 gens     "OXBOW G1"     "1 "   0

tran_4094         "tran NAVYCOSO 230 to NAVY II   115 ck 1"
 tran "NAVYCOSO 230.00"  "NAVY II  115.00"  "1 "  0

tran_4095         "tran LUGO     500 to LUGO      230 ck 1"
 tran     24086     24085   "1 "  0

tran_4096         "tran LUGO     500 to LUGO      230 ck 2"
 tran     24086     24085   "2 "  0

tran_4097         "tran Eldorado 500 to Eldorado 230 ck 1"
 tran     24042     24041   "1 "  0

tran_4098         "tran Eldorado 500 to Eldorado 230 ck 2"
 tran     24042     24041   "2 "  0

line_002          "line PALOVRDE to DEVERS   500 ck 1"
 line     15021     24801   "1 "  1 0

line_003          "line MERCHANT to ELDORDO  230 ck 1"
 line     18620     24041   "1 "  1 0

line_004          "line MERCHANT to ELDORDO  230 ck 2"
 line     18620     24041   "2 "  1 0

line_047          "line ELDORDO  to LUGO     500 ck 1"
 line     24042     24086   "1 "  1 0

line_079          "line LUGO     to MOHAVE   500 ck 1"
 line     24086     24097   "1 "  1 0

line_085          "line LUGO     to VICTORVL 500 ck 1"
 line     24086     26105   "1 "  1 0

line_150          "line PISGAH   to ELDORDO  230 ck 2"
 line     24219     24041   "2 "  1 0

line_151          "line PISGAH   to LUGO     230 ck 1"
 line     24219     24085   "1 "  1 0

line_152          "line PISGAH   to LUGO     230 ck 2"
 line     24219     24085   "2 "  1 0

line_153          "line PISGAH   to CIMA     230 ck 1"
 line     24219     24627   "1 "  1 0

line_168          "line CIMA     to ELDORDO  230 ck 1"
 line     24627     24041   "1 "  1 0

line_1050          "line PISGAH   to Lugo  500 ck 2"
 line     24239     24086   "2 "  1 0

line_1051          "line PISGAH   to Lugo  500 ck 1"
 line     24239     24086   "1 "  1 0
```

```
line_1052        "line PISGAH   to ElDorado  500 ck 1"
 line     24042     24239   "1 "  1 0

line_1053        "line WESTFRY to LUGO 230 ck 1"
 line     24085     28237   "1 "  1 0

line_1054        "line WESTFRY to PISGAH 230 ck 1"
 line     24219     28237   "1 "  1 0

line_1055        "line WESTFRY to LUGO 230 ck 2"
 line     24085     28237   "2 "  1 0

line_1056        "line WESTFRY to PISGAH 230 ck 2"
 line     24219     28237   "2 "  1 0

tran_4099        "tran PISGAH 230 TO 500 ck 1"
 tran     24239     24219   "1 "  0

line_150R        "line PISGAH to ELDORDO 230 ck 2"
 line     24219     24041   "2 "  1 0

line_151R        "line PISGAH to LUGO 230 ck 1"
 line     24219     24085   "1 "  1 0

line_152R        "line PISGAH to LUGO 230 ck 2"
 line     24219     24085   "2 "  1 0

line_153R        "line PISGAH to CIMA 230 ck 1"
 line     24219     24627   "1 "  1 0

line_168R        "line CIMA to ELDORDO 230 ck 1"
 line     24627     24041   "1 "  1 0

line_1050R        "line PISGAH to Lugo 500 ck 2"
 line     24239     24086   "2 "  1 0

line_1051R        "line PISGAH to Lugo 500 ck 1"
 line     24239     24086   "1 "  1 0

line_1052R        "line PISGAH to ElDorado 500 ck 1"
 line     24042     24239   "1 "  1 0
line_1053R        "line WESTFRY to LUGO 230 ck 1"
 line     24085     28237   "1 "  1 0

line_1054R        "line WESTFRY to PISGAH 230 ck 1"
 line     24219     28237   "1 "  1 0

line_1055R        "line WESTFRY to LUGO 230 ck 2"
 line     24085     28237   "2 "  1 0

line_1056R        "line WESTFRY to PISGAH 230 ck 2"
 line     24219     28237   "2 "  1 0

line_2290                "VICTORVILLE - MCCULLOUGH 500 1 AND 2"
 line        26105     26048   "1 "  1 0
 line        26105     26048   "2 "  1 0

line_2291                "PISGAH - Lugo 500 1 AND 2"
```

```
 line     24239     24086   "1 "  1 0
 line     24239     24086   "2 "  1 0

line_2184R                    "VICTOR - LUGO 230 1, VICTOR - LUGO 230 2"
 line        24601     24085   "1 "  1 0
 line        24601     24085   "2 "  1 0
 line "HIDESERT 230.00"  "VICTOR   230.00"  "1 "  1 0

line_2190R                    "PISGAH 230 - LUGO 230 1, PISGAH 230 - LUGO 230 2"
 line        24219     24085   "1 "  1 0
 line        24219     24085   "2 "  1 0

line_2191R                    "ELDORDO - LUGO 500 1, PISGAH - ELDORDO 230 2"
 line        24042     24086   "1 "  1 0
 line        24219     24041   "2 "  1 0

line_2192R                    "ELDORDO - LUGO 500 1, PISGAH - LUGO 230 1"
 line        24042     24086   "1 "  1 0
 line        24219     24085   "1 "  1 0

line_2193R                    "ELDORDO - LUGO 500 1, PISGAH - LUGO 230 2"
 line        24042     24086   "1 "  1 0
 line        24219     24085   "2 "  1 0

line_2200R                    "LUGO - MOHAVE 500 1, PISGAH - LUGO 230 1"
 line        24086     24097   "1 "  1 0
 line        24219     24085   "1 "  1 0

line_2201R                    "LUGO - MOHAVE 500 1, PISGAH - LUGO 230 2"
 line        24086     24097   "1 "  1 0
 line        24219     24085   "2 "  1 0

line_2233R                    "MOENKOPI - ELDORDO  500 1, PISGAH - ELDORDO 230 2"
 line        14002     24042   "1 "  1 0
 line        24219     24041   "2 "  1 0

line_2234R                    "MOHAVE - ELDORDO 500 1, PISGAH - ELDORDO 230 2"
 line        24097     24042   "1 "  1 0
 line        24219     24041   "2 "  1 0
 gens     24245     "1 "   0

line_2249R                    "MEAD S - ELDORDO 230 2, PISGAH - ELDORDO 230 2"
 line        19012     24041   "2 "  1 0
 line        24219     24041   "2 "  1 0

line_2250R                    "CIMA - ELDORDO 2300 1, MEAD S - ELDORDO 2300 1"
 line        24627     24041   "1 "  1 0
 line        19012     24041   "1 "  1 0

line_2259R                    "VICTOR - LUGO 230 2, PISGAH - LUGO 230 2"
 line        24601     24085   "2 "  1 0
 line        24219     24085   "2 "  1 0

line_2260R                    "KRAMER - LUGO 230 1, PISGAH - LUGO 230 1"
 line        24701     24085   "1 "  1 0
 line        24219     24085   "1 "  1 0

line_2184                     "VICTOR   230.00 - LUGO     230.00 1, VICTOR   230.00 - LUGO     230.00 2"
```

```
 line      24601    24085  "1 "  1 0
 line      24601    24085  "2 "  1 0

line_2188                   "MEAD S   230.00 - ELDORDO  230.00 1, MEAD S   230.00 - ELDORDO  230.00 2"
 line      19012    24041  "1 "  1 0
 line      19012    24041  "2 "  1 0

line_2189                   "CAMINO   230.00 - MEAD S   230.00 E, CAMINO   230.00 - MEAD S   230.00 W"
 line      24019    19012  "E "  1 0
 line      24019    19012  "W "  1 0

line_2190                   "PISGAH   230.00 - LUGO     230.00 1, PISGAH   230.00 - LUGO     230.00 2"
 line      24219    24085  "1 "  1 0
 line      24219    24085  "2 "  1 0

line_2191                   "ELDORDO  500.00 - LUGO     500.00 1, PISGAH   230.00 - ELDORDO  230.00 2"
 line      24042    24086  "1 "  1 0
 line      24219    24041  "2 "  1 0

line_2192                   "ELDORDO  500.00 - LUGO     500.00 1, PISGAH   230.00 - LUGO     230.00 1"
 line      24042    24086  "1 "  1 0
 line      24219    24085  "1 "  1 0

line_2193                   "ELDORDO  500.00 - LUGO     500.00 1, PISGAH   230.00 - LUGO     230.00 2"
 line      24042    24086  "1 "  1 0
 line      24219    24085  "2 "  1 0

line_2194                   "LUGO     500.00 - MIRALOMA 500.00 2, LUGO     500.00 - MIRALOMA 500.00 3"
 line      24086    24092  "2 "  1 0
 line      24086    24092  "3 "  1 0

line_2195                   "LUGO     500.00 - MIRALOMA 500.00 2, LUGO     500.00 - SERRANO  500.00 1"
 line      24086    24092  "2 "  1 0
 line      24086    24138  "1 "  1 0

line_2200                   "LUGO     500.00 - MOHAVE   500.00 1, PISGAH   230.00 - LUGO     230.00 1"
 line      24086    24097  "1 "  1 0
 line      24219    24085  "1 "  1 0

line_2201                   "LUGO     500.00 - MOHAVE   500.00 1, PISGAH   230.00 - LUGO     230.00 2"
 line      24086    24097  "1 "  1 0
 line      24219    24085  "2 "  1 0

line_2202                   "LUGO     500.00 - SERRANO  500.00 1, MIRALOMA 500.00 - SERRANO  500.00
1"
 line      24086    24138  "1 "  1 0
 line      24092    24138  "1 "  1 0

line_2214                   "LUGO     500.00 - VINCENT  500.00 1, LUGO     500.00 - VINCENT  500.00 2"
 line      24086    24156  "1 "  1 0
 line      24086    24156  "2 "  1 0

line_2215                   "MIDWAY   500.00 - VINCENT  500.00 1, MIDWAY   500.00 - VINCENT  500.00 2"
 line      30060    24156  "1 "  1 0
 line      30060    24156  "2 "  1 0

line_2233                   "MOENKOPI 500.00 - ELDORDO  500.00 1, PISGAH   230.00 - ELDORDO  230.00
2"
```

```
 line      14002    24042   "1 "  1 0
 line      24219    24041   "2 "  1 0

line_2234                    "MOHAVE   500.00 - ELDORDO  500.00 1, PISGAH   230.00 - ELDORDO  230.00
2"
 line      24097    24042   "1 "  1 0
 line      24219    24041   "2 "  1 0

line_2249                    "MEAD S   230.00 - ELDORDO  230.00 2, PISGAH   230.00 - ELDORDO  230.00 2"
 line      19012    24041   "2 "  1 0
 line      24219    24041   "2 "  1 0

line_2250                    "CIMA     230.00 - ELDORDO  230.00 1, MEAD S   230.00 - ELDORDO  230.00 1"
 line      24627    24041   "1 "  1 0
 line      19012    24041   "1 "  1 0

line_2255                    "LUGO     500.00 - MIRALOMA 500.00 3, LUGO     500.00 - MOHAVE   500.00 1"
 line      24086    24092   "3 "  1 0
 line      24086    24097   "1 "  1 0

line_2256                    "ELDORDO  500.00 - LUGO     500.00 1, LUGO     500.00 - MIRALOMA 500.00 2"
 line      24042    24086   "1 "  1 0
 line      24086    24092   "2 "  1 0

line_2257                    "LUGO     500.00 - SERRANO  500.00 1, LUGO     500.00 - VINCENT  500.00 1"
 line      24086    24138   "1 "  1 0
 line      24086    24156   "1 "  1 0

line_2258                    "LUGO     500.00 - VINCENT  500.00 2, LUGO     500.00 - VICTORVL 500.00 1"
 line      24086    24156   "2 "  1 0
 line      24086    26105   "1 "  1 0

line_2259                    "VICTOR   230.00 - LUGO     230.00 2, PISGAH   230.00 - LUGO     230.00 2"
 line      24601    24085   "2 "  1 0
 line      24219    24085   "2 "  1 0

line_2260                    "KRAMER   230.00 - LUGO     230.00 1, PISGAH   230.00 - LUGO     230.00 1"
 line      24701    24085   "1 "  1 0
 line      24219    24085   "1 "  1 0

line_2261                    "KRAMER   230.00 - LUGO     230.00 1, KRAMER   230.00 - LUGO     230.00 2"
 line      24701    24085   "1 "  1 0
 line      24701    24085   "2 "  1 0
END
```

APPENDIX D

2010 LIGHT SPRING TRANSIENT STABILITY PLOTS

```
RUN
*   3 phase 7 cycle fault at INYOKERN
*   Loss of CONTROL-INYOKERN 115.00 1 & 2
*
*  CC cards for post-transient only
*
*   Fault bus at INYOKERN
FB   60.0 "INYOKERN" 115.
* slg: FB   0.0 "INYOKERN" 115. .00072  .0076
*
*   Clear fault at INYOKERN
CFB  67.0 "INYOKERN" 115.
*
*   Trip CONTROL-INYOKERN 115.00 1 & 2
*
DL   67.0 "CONTROL " 115. "INYOKERN" 115. "1 "
DL   67.0 "CONTROL " 115. "INYOKERN" 115. "2 "
*
*  Trip BISHOP HYDRO and OXBOW in 20 cycles after fault
*
TG   80.0 "BSPHYD26"   2.20 "**"
TG   80.0 "BSPHYD34"   2.20 "**"
*
DL   80.0 "OXBOW  B" 115. "CONTROL " 115. "1 "
TG   80.0 "OXBOW G1"  13.80 "**"
*
```

BUS_VOLT_MAG FOR NORTH OF LUGO 230/115

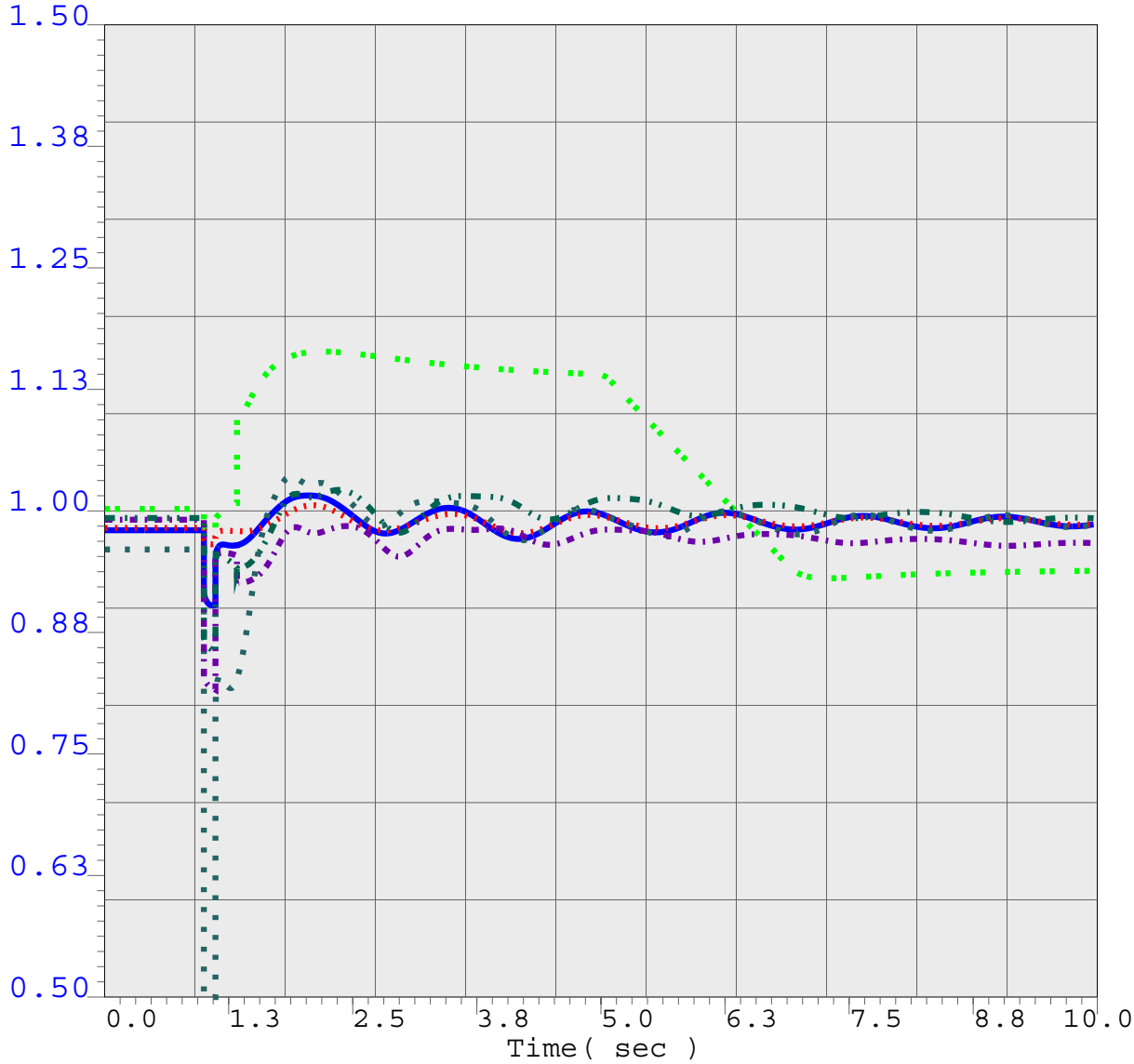

0.5	vbus	24701	KRAMER	230.0	1	1	1.5
0.5	vbus	24601	VICTOR	230.0	1	1	1.5
0.5	vbul	24731	INYOKERN	115.0	1	1	1.5
0.5	vbug	24747	OXBOW G1	13.8	1	1	1.5
0.5	vbus	24723	CONTROL	115.0	1	1	1.5
0.5	vbus	24730	INYO PS	115.0	1	1	1.5

VICTORVILLE 2 PROJECT STUDIES

CASE NAME:sidewindermt\offpeak-postsm.sav

SCE [LOAD 16267 XCHGE -7135 GEN 10745][AA 1340V 2356M 1241D 1005VA]MW

[S.LUGO 3909MW][N.LUGO 1908MW][N.SONGS 1055MW][S.SONGS 1095MW]

[SYLMAR 865][VIC-LUGO 2033][EL-LUGO 1058][MHV-LUGO 648][PV-DV 2908]MW

vv-2-2010sp-post_CONTROL-INYOKERN-DLO.chf

.

Thu Jul 27 13:16:43 2006

BUS_VOLT_MAG FOR NORTH OF LUGO 230/115

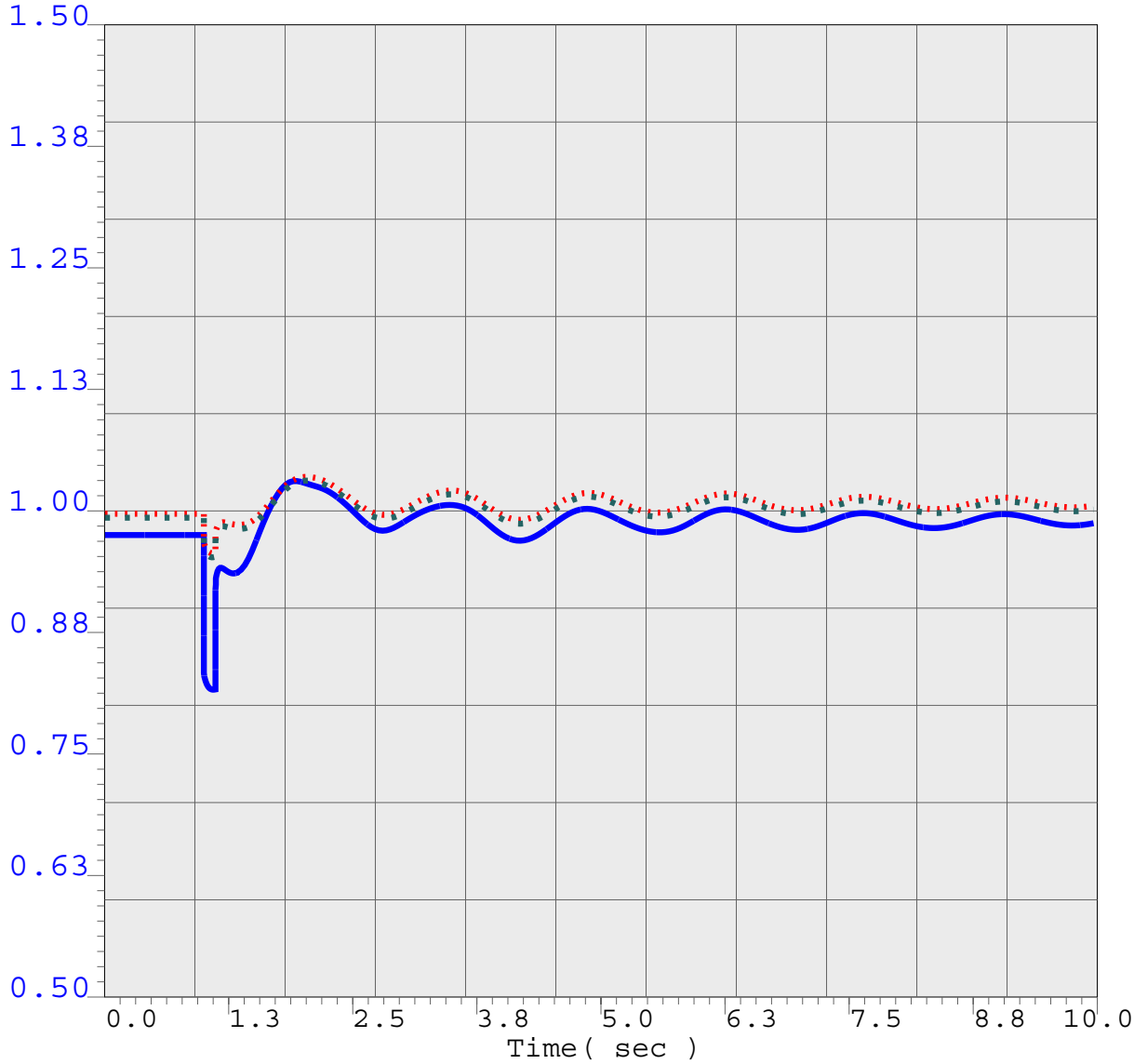

___	0.5	vbul	24702	KRAMER	115.0	1	1	1.5
....	0.5	vbul	24602	VICTOR	115.0	1	1	1.5
_ _	0.5	vbul	24608	SAVAGE	115.0	1	1	1.5
_ .	0.5	vbus	24793		0.0	1		1.5
_ _	0.5	vbug	24791		0.0	1		1.5

VICTORVILLE 2 PROJECT STUDIES

CASE NAME:sidewindermt\offpeak-postsm.sav

SCE [LOAD 16267 XCHGE -7135 GEN 10745][AA 1340V 2356M 1241D 1005VA]MW

[S.LUGO 3909MW][N.LUGO 1908MW][N.SONGS 1055MW][S.SONGS 1095MW]

[SYLMAR 865][VIC-LUGO 2033][EL-LUGO 1058][MHV-LUGO 648][PV-DV 2908]MW

BUS_VOLT_MAG FOR NORTH OF LUGO 230/115

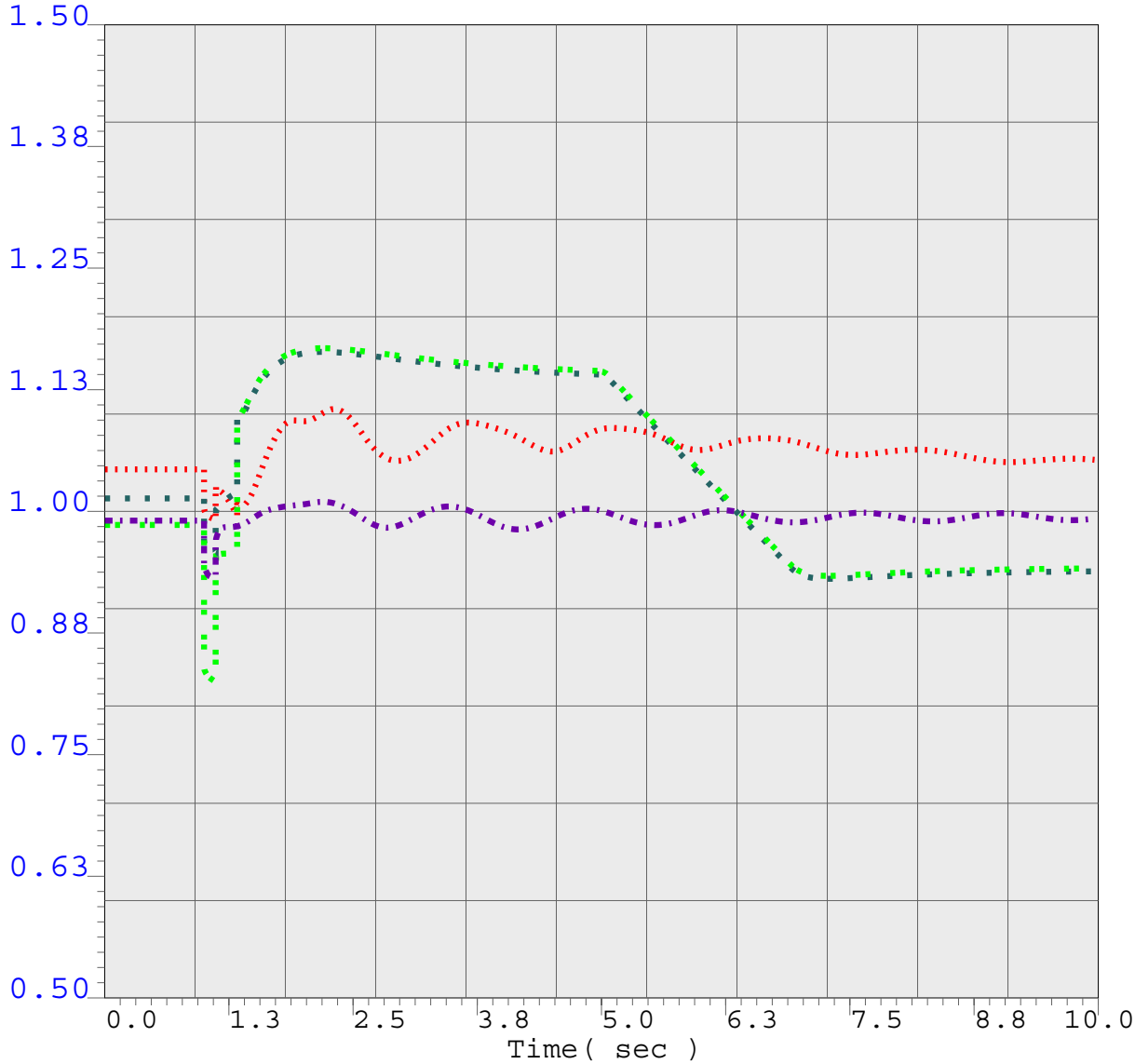

VICTORVILLE 2 PROJECT STUDIES

CASE NAME:sidewindermt\offpeak-postsm.sav

SCE [LOAD 16267 XCHGE -7135 GEN 10745][AA 1340V 2356M 1241D 1005VA]MW

[S.LUGO 3909MW][N.LUGO 1908MW][N.SONGS 1055MW][S.SONGS 1095MW]

[SYLMAR 865][VIC-LUGO 2033][EL-LUGO 1058][MHV-LUGO 648][PV-DV 2908]MW

BUS_FREQUENCY FOR SCE 230/115

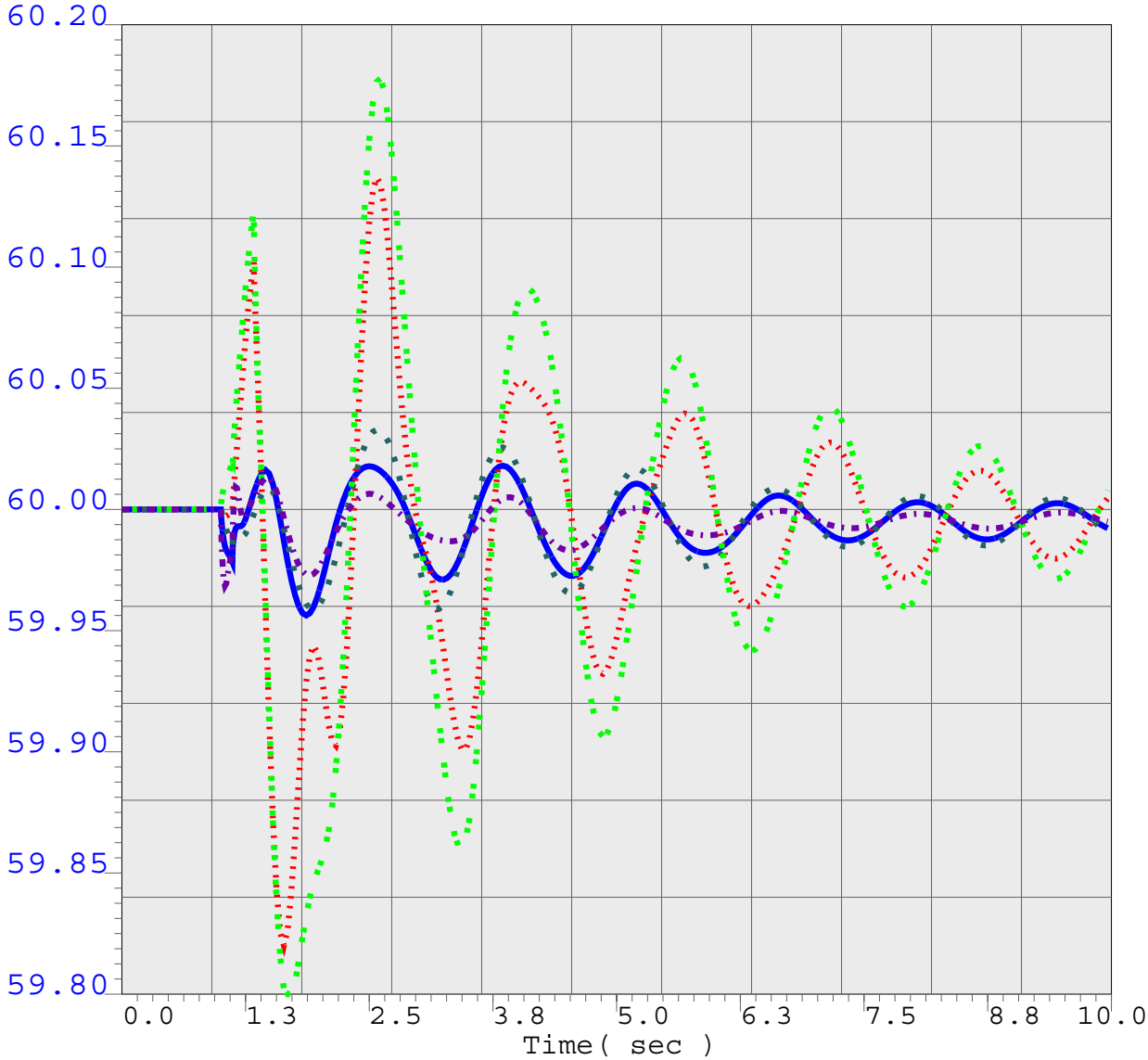

VICTORVILLE 2 PROJECT STUDIES

CASE NAME:sidewindermt\offpeak-postsm.sav

SCE [LOAD 16267 XCHGE -7135 GEN 10745][AA 1340V 2356M 1241D 1005VA]MW

[S.LUGO 3909MW][N.LUGO 1908MW][N.SONGS 1055MW][S.SONGS 1095MW]

[SYLMAR 865][VIC-LUGO 2033][EL-LUGO 1058][MHV-LUGO 648][PV-DV 2908]MW

MACHINE ANGLE

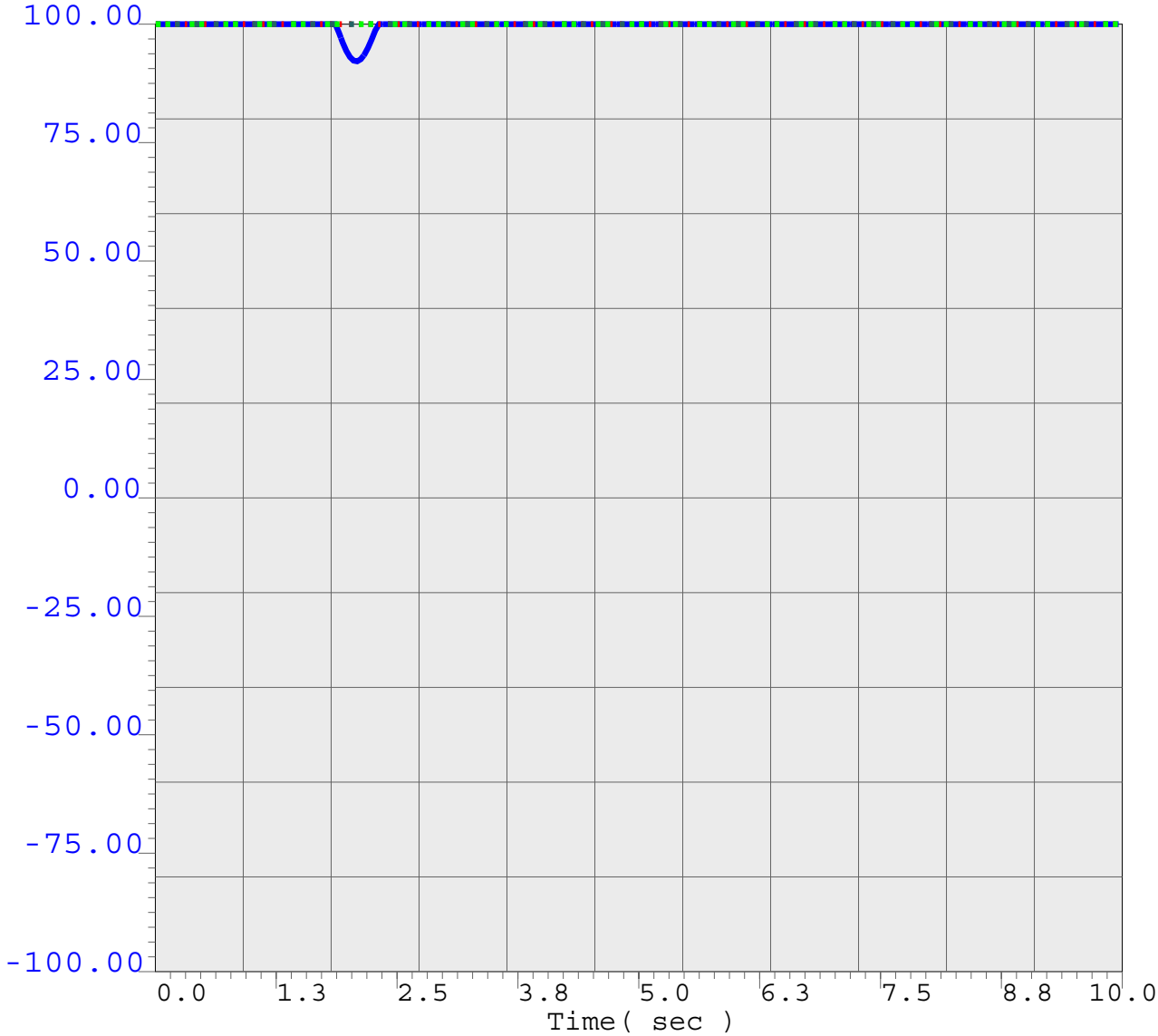

___	-100.0	ang	24714	ALTA 1G	13.8	1	1	100.0
....	-100.0	ang	24747	OXBOW G1	13.8	1	1	100.0
_ _	-100.0	ang	24709	BSPHYD26	2.2	1	1	100.0
_ _ .	-100.0	ang	24711	CALGEN1G	13.8	1	1	100.0
_._	-100.0	ang	24354		0.0	1		100.0

VICTORVILLE 2 PROJECT STUDIES

CASE NAME:sidewindermt\offpeak-postsm.sav

SCE [LOAD 16267 XCHGE -7135 GEN 10745][AA 1340V 2356M 1241D 1005VA]MW

[S.LUGO 3909MW][N.LUGO 1908MW][N.SONGS 1055MW][S.SONGS 1095MW]

[SYLMAR 865][VIC-LUGO 2033][EL-LUGO 1058][MHV-LUGO 648][PV-DV 2908]MW

```
RUN
*   3 phase 7 cycle fault at KRAMER
*   Loss of KRAMER-INYOKERN-RANDSBURG 115.00 LINE
*
*  CC cards for post-transient only
*
*   Fault bus at KRAMER
FB   60.0 "INYOKERN  " 115.
*
*
*   Clear fault at KRAMER
CFB  67.0 "INYOKERN  " 115.
*
*   TRIP KRAMER-INYOKERN-RANDSBURG  115.00 1
*
DL   67.0 "TAP701  " 115. "KRAMER  " 115. "1 "
DL   67.0 "TAP701  " 115. "INYOKERN" 115. "1 "
DL   67.0 "RANDSBRG" 115. "TAP701  " 115. "1 "
*
```

BUS_VOLT_MAG FOR NORTH OF LUGO 230/115

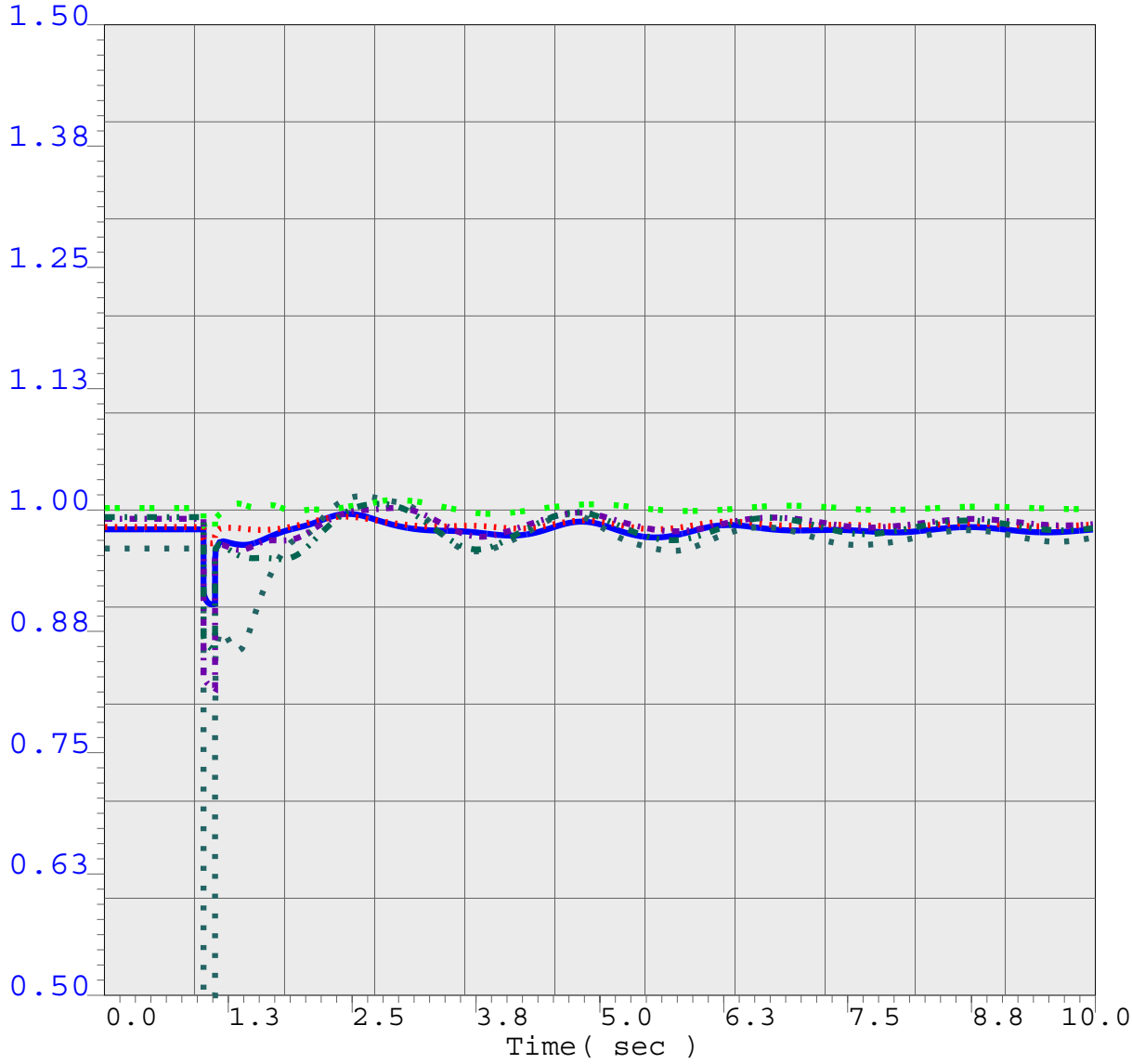

0.5	vbus	24701	KRAMER	230.0	1	1	1.5
0.5	vbus	24601	VICTOR	230.0	1	1	1.5
0.5	vbul	24731	INYOKERN	115.0	1	1	1.5
0.5	vbug	24747	OXBOW G1	13.8	1	1	1.5
0.5	vbus	24723	CONTROL	115.0	1	1	1.5
0.5	vbus	24730	INYO PS	115.0	1	1	1.5

VICTORVILLE 2 PROJECT STUDIES

CASE NAME:sidewindermt\offpeak-postsm.sav

SCE [LOAD 16267 XCHGE -7135 GEN 10745][AA 1340V 2356M 1241D 1005VA]MW

[S.LUGO 3909MW][N.LUGO 1908MW][N.SONGS 1055MW][S.SONGS 1095MW]

[SYLMAR 865][VIC-LUGO 2033][EL-LUGO 1058][MHV-LUGO 648][PV-DV 2908]MW

vv-2-2010sp-post_KRAMER-INYKN-RANBG-SLO.chf

.

Thu Jul 27 13:16:46 2006

BUS_VOLT_MAG FOR NORTH OF LUGO 230/115

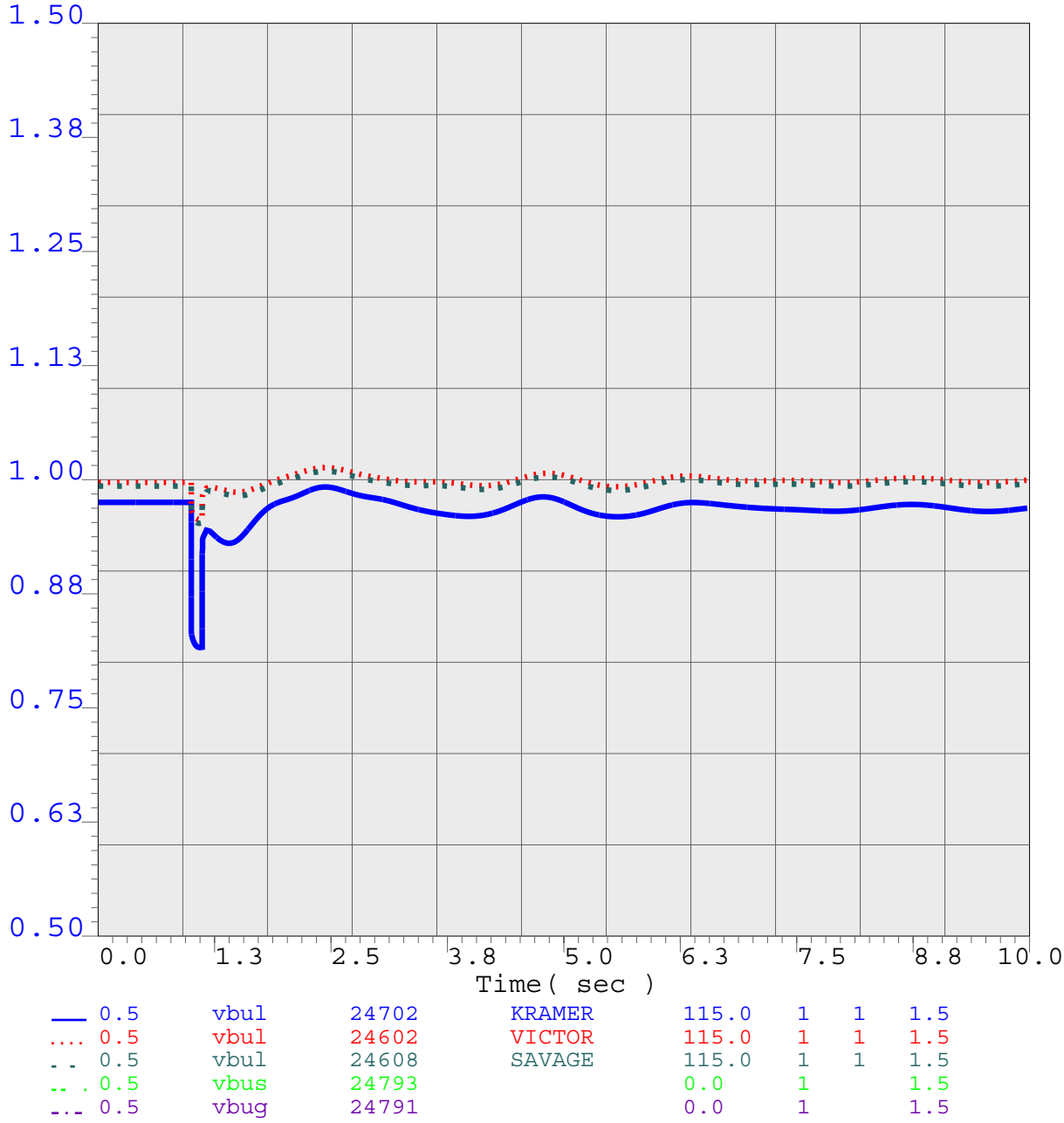

VICTORVILLE 2 PROJECT STUDIES

CASE NAME:sidewindermt\offpeak-postsm.sav

SCE [LOAD 16267 XCHGE -7135 GEN 10745][AA 1340V 2356M 1241D 1005VA]MW

[S.LUGO 3909MW][N.LUGO 1908MW][N.SONGS 1055MW][S.SONGS 1095MW]

[SYLMAR 865][VIC-LUGO 2033][EL-LUGO 1058][MHV-LUGO 648][PV-DV 2908]MW

BUS_VOLT_MAG FOR NORTH OF LUGO 230/115

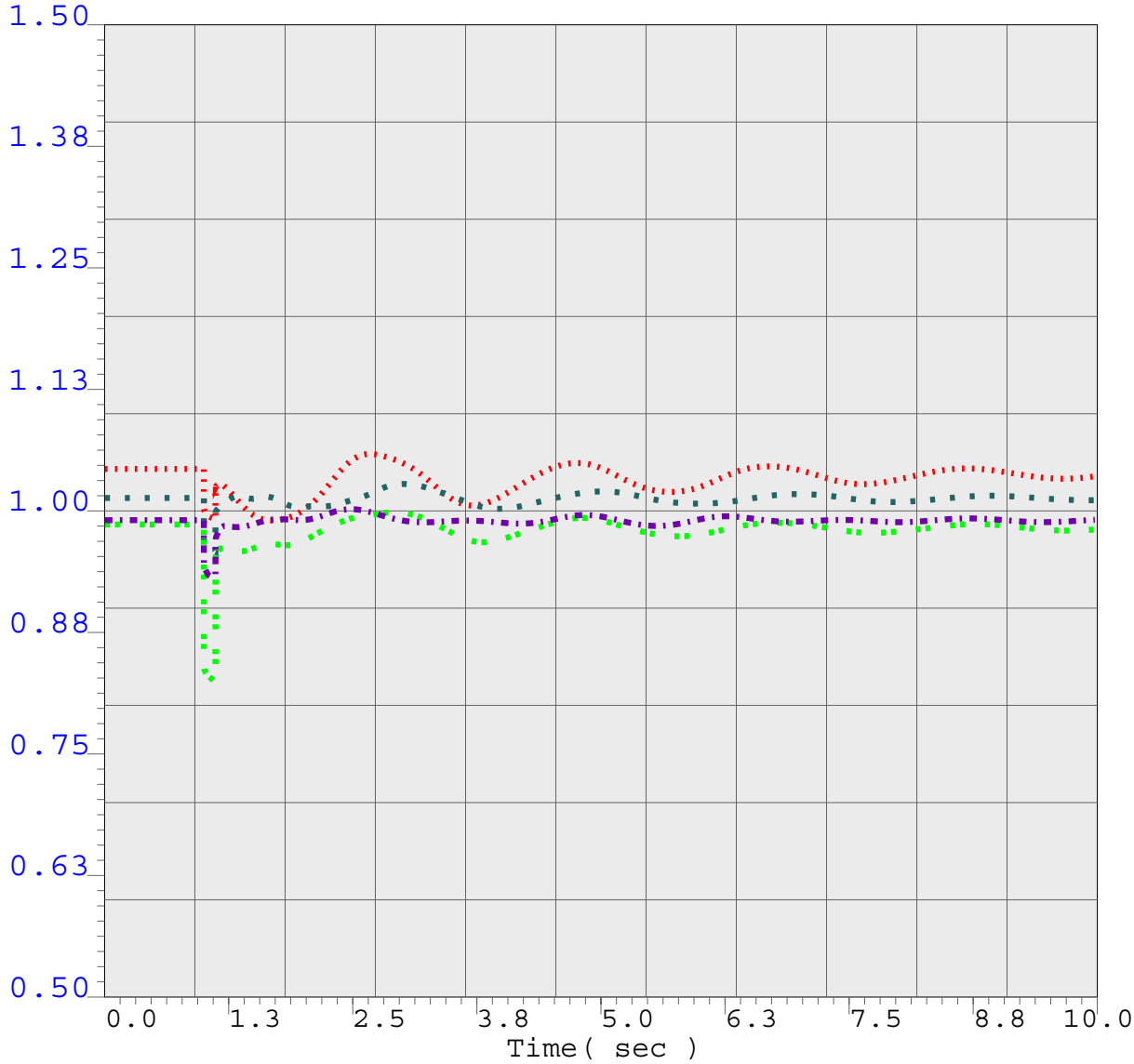

0.5	vbus	24787		0.0	1		1.5
0.5	vbus	24729	INYO	230.0	1	1	1.5
0.5	vbus	24748	OXBOW A	230.0	1	1	1.5
0.5	vbus	24760	OXBOW B	230.0	1	1	1.5
0.5	vbus	24717	COLWATER	230.0	1	1	1.5
0.5	vbus	24793		0.0	1		1.5

VICTORVILLE 2 PROJECT STUDIES

CASE NAME:sidewindermt\offpeak-postsm.sav

SCE [LOAD 16267 XCHGE -7135 GEN 10745][AA 1340V 2356M 1241D 1005VA]MW

[S.LUGO 3909MW][N.LUGO 1908MW][N.SONGS 1055MW][S.SONGS 1095MW]

[SYLMAR 865][VIC-LUGO 2033][EL-LUGO 1058][MHV-LUGO 648][PV-DV 2908]MW

BUS_FREQUENCY FOR SCE 230/115

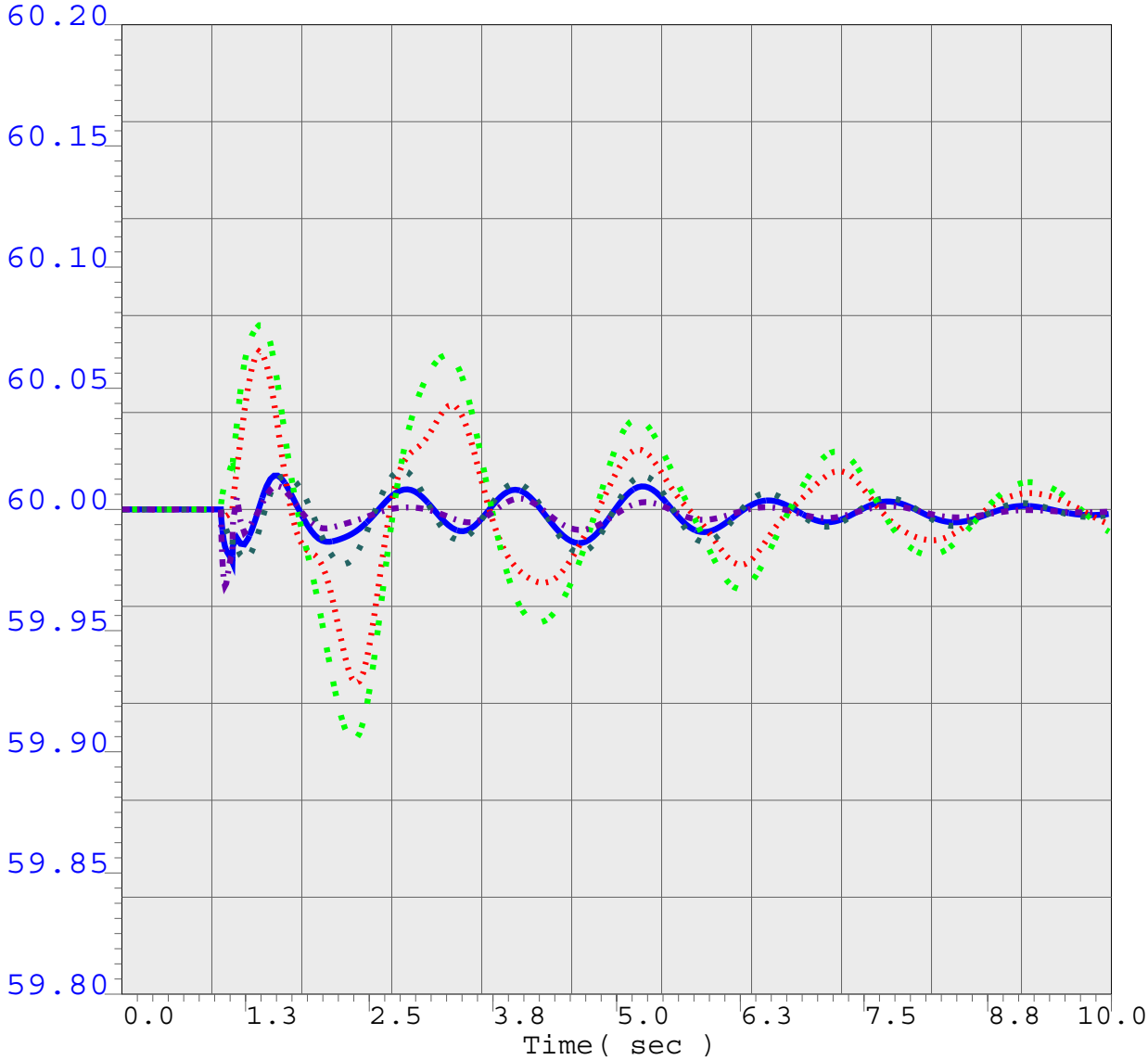

59.8	fbus	24701	KRAMER	230.0	1	1	60.2
59.8	fbus	24729	INYO	230.0	1	1	60.2
59.8	fbus	24717	COLWATER	230.0	1	1	60.2
59.8	fbus	24730	INYO PS	115.0	1	1	60.2
59.8	fbul	24602	VICTOR	115.0	1	1	60.2
59.8	fbus	24793		0.0	1		60.2

VICTORVILLE 2 PROJECT STUDIES

CASE NAME:sidewindermt\offpeak-postsm.sav

SCE [LOAD 16267 XCHGE -7135 GEN 10745][AA 1340V 2356M 1241D 1005VA]MW

[S.LUGO 3909MW][N.LUGO 1908MW][N.SONGS 1055MW][S.SONGS 1095MW]

[SYLMAR 865][VIC-LUGO 2033][EL-LUGO 1058][MHV-LUGO 648][PV-DV 2908]MW

MACHINE ANGLE

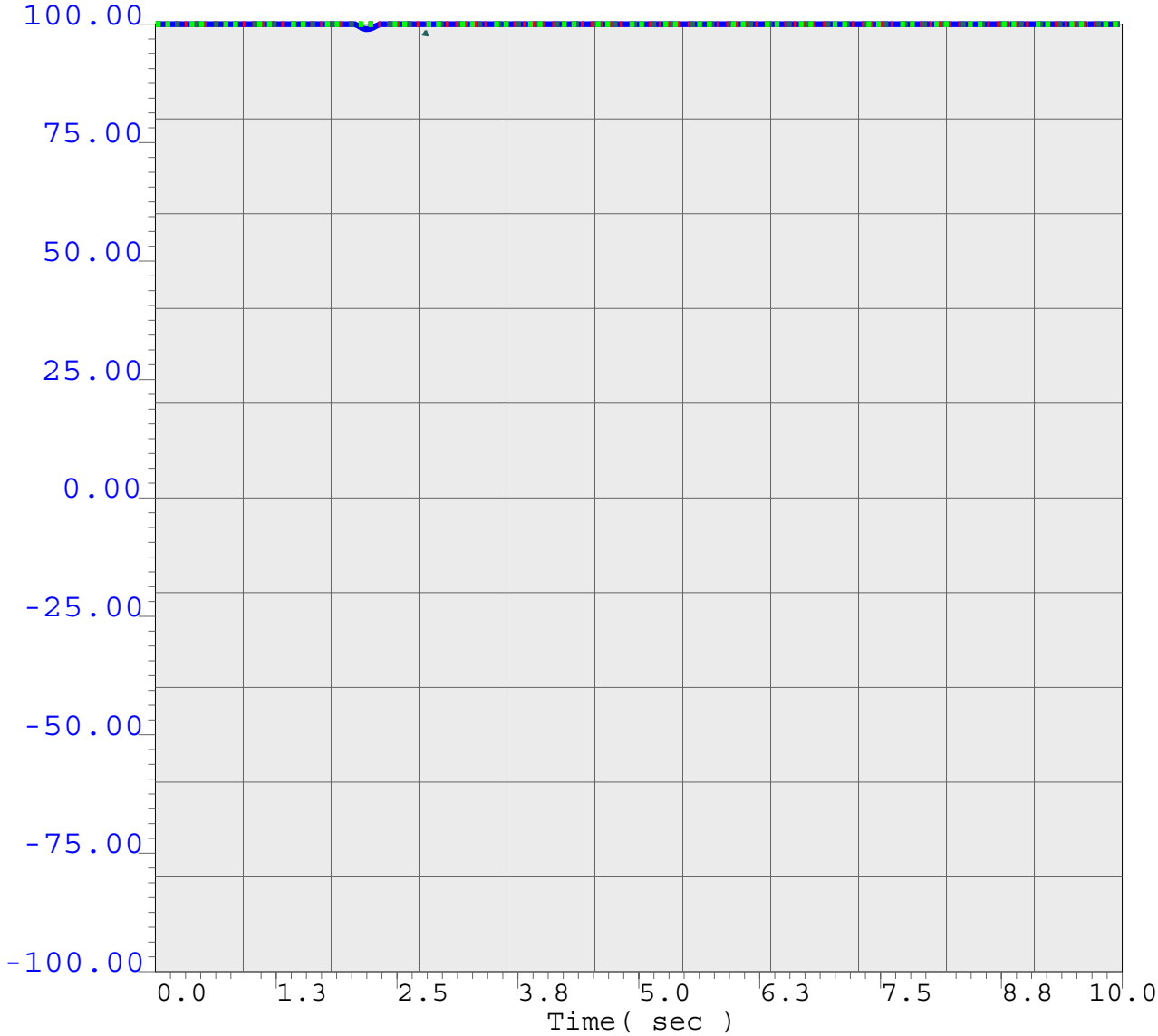

___	-100.0	ang	24714	ALTA 1G	13.8	1	1	100.0
....	-100.0	ang	24747	OXBOW G1	13.8	1	1	100.0
_ _	-100.0	ang	24709	BSPHYD26	2.2	1	1	100.0
_ .	-100.0	ang	24711	CALGEN1G	13.8	1	1	100.0
_._	-100.0	ang	24354		0.0	1		100.0

VICTORVILLE 2 PROJECT STUDIES

CASE NAME:sidewindermt\offpeak-postsm.sav

SCE [LOAD 16267 XCHGE -7135 GEN 10745][AA 1340V 2356M 1241D 1005VA]MW

[S.LUGO 3909MW][N.LUGO 1908MW][N.SONGS 1055MW][S.SONGS 1095MW]

[SYLMAR 865][VIC-LUGO 2033][EL-LUGO 1058][MHV-LUGO 648][PV-DV 2908]MW

```
RUN
*   3 phase 7 cycle fault at KRAMER
*   Loss of KRAMER-INYOKERN-RANDSBURG 115.00 LINE
*
*  CC cards for post-transient only
*
*   Fault bus at KRAMER
FB   60.0 "INYOKERN  " 115.
*
*
*   Clear fault at KRAMER
CFB  67.0 "INYOKERN  " 115.
*
*   TRIP KRAMER-INYOKERN-RANDSBURG  115.00 1
*
DL   67.0 "TAP701  " 115. "KRAMER  " 115. "1 "
DL   67.0 "TAP701  " 115. "INYOKERN" 115. "1 "
DL   67.0 "RANDSBRG" 115. "TAP701  " 115. "1 "
*
*   OPEN INYO TIE
DL   67.0 "CONTROL " 115. "INYO    " 115. "1 "
*
*  Trip CALGEN and MCGEN in 18 cycles after fault
*
TG   78.0 "MC GEN  "  13.80 "**"
*
*
DL   78.0 "CAL GEN " 115. "INYOKERN" 115. "1 "
TG   78.0 "CALGEN1G"  13.80 "**"
TG   78.0 "CALGEN2G"  13.80 "**"
TG   78.0 "CALGEN3G"  13.80 "**"
*
```

BUS_VOLT_MAG FOR NORTH OF LUGO 230/115

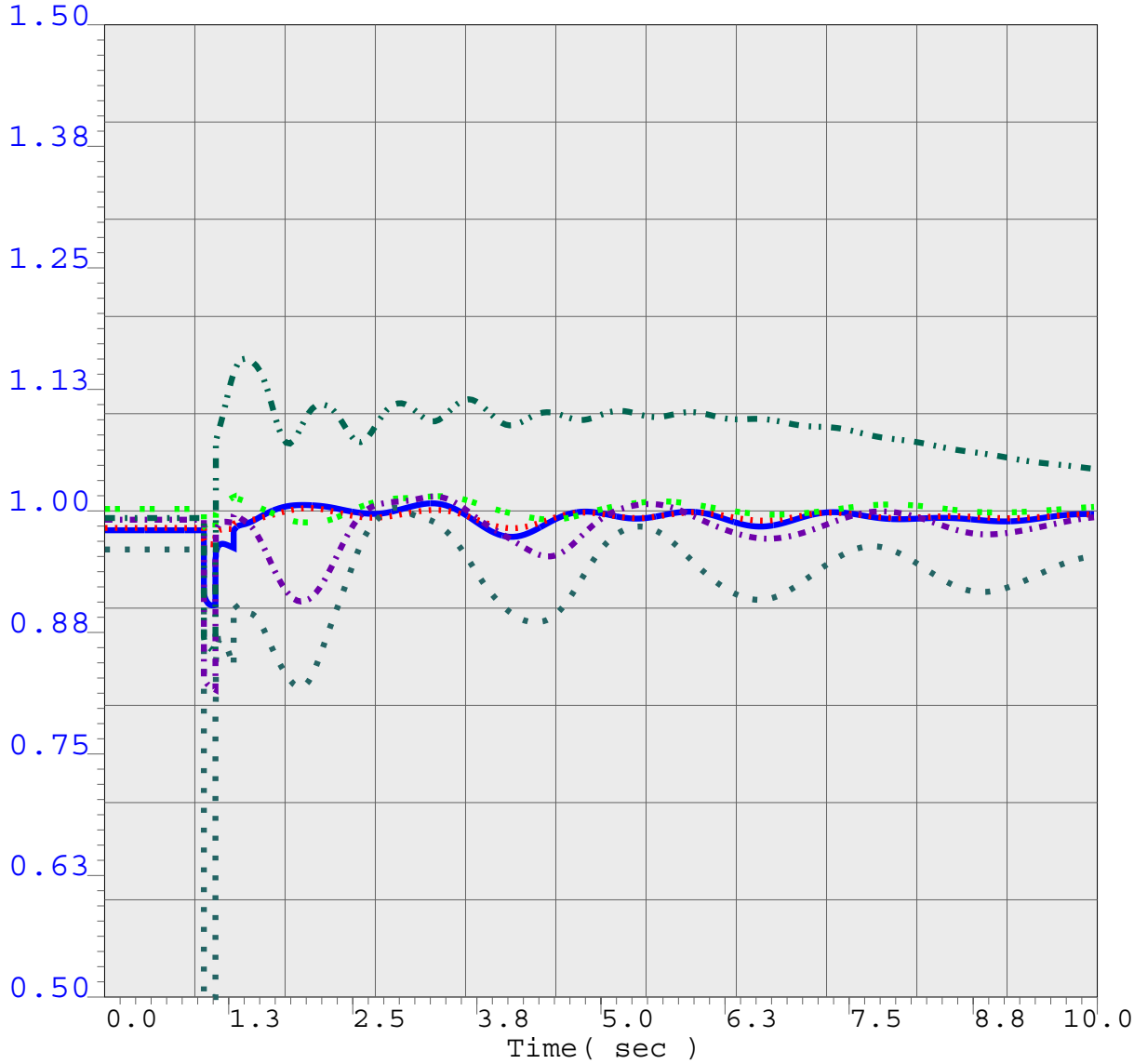

VICTORVILLE 2 PROJECT STUDIES

CASE NAME:sidewindermt\offpeak-postsm.sav

SCE [LOAD 16267 XCHGE -7135 GEN 10745][AA 1340V 2356M 1241D 1005VA]MW

[S.LUGO 3909MW][N.LUGO 1908MW][N.SONGS 1055MW][S.SONGS 1095MW]

[SYLMAR 865][VIC-LUGO 2033][EL-LUGO 1058][MHV-LUGO 648][PV-DV 2908]MW

vv-2-2010sp-post_KRAMER-INYKN-RANBG-SLO-TG.chf

.

Thu Jul 27 13:16:45 2006

BUS_VOLT_MAG FOR NORTH OF LUGO 230/115

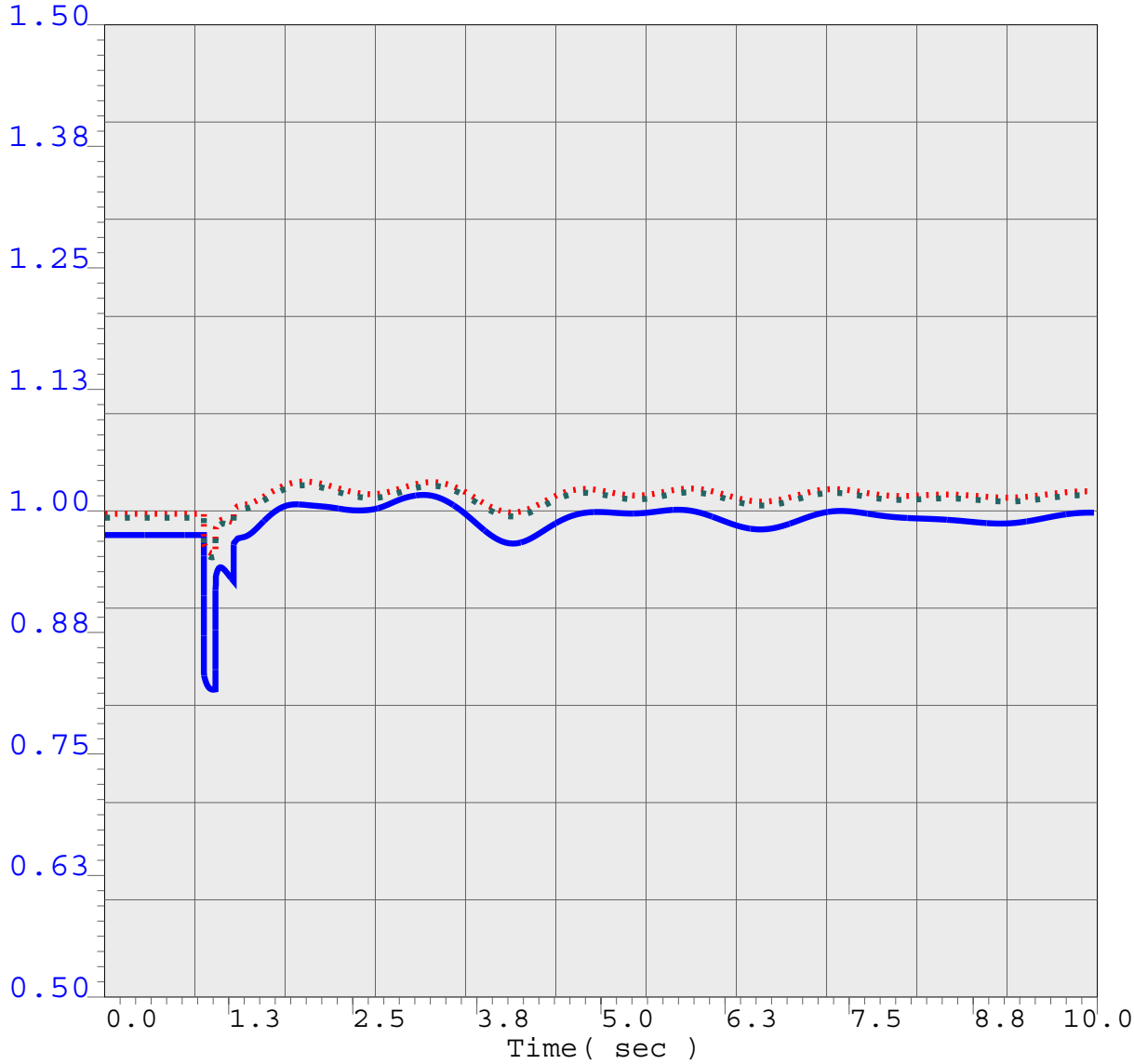

___	0.5	vbul	24702	KRAMER	115.0	1	1	1.5
....	0.5	vbul	24602	VICTOR	115.0	1	1	1.5
_ _	0.5	vbul	24608	SAVAGE	115.0	1	1	1.5
_ .	0.5	vbus	24793		0.0	1		1.5
_ _	0.5	vbug	24791		0.0	1		1.5

VICTORVILLE 2 PROJECT STUDIES

CASE NAME:sidewindermt\offpeak-postsm.sav

SCE [LOAD 16267 XCHGE -7135 GEN 10745][AA 1340V 2356M 1241D 1005VA]MW

[S.LUGO 3909MW][N.LUGO 1908MW][N.SONGS 1055MW][S.SONGS 1095MW]

[SYLMAR 865][VIC-LUGO 2033][EL-LUGO 1058][MHV-LUGO 648][PV-DV 2908]MW

BUS_VOLT_MAG FOR NORTH OF LUGO 230/115

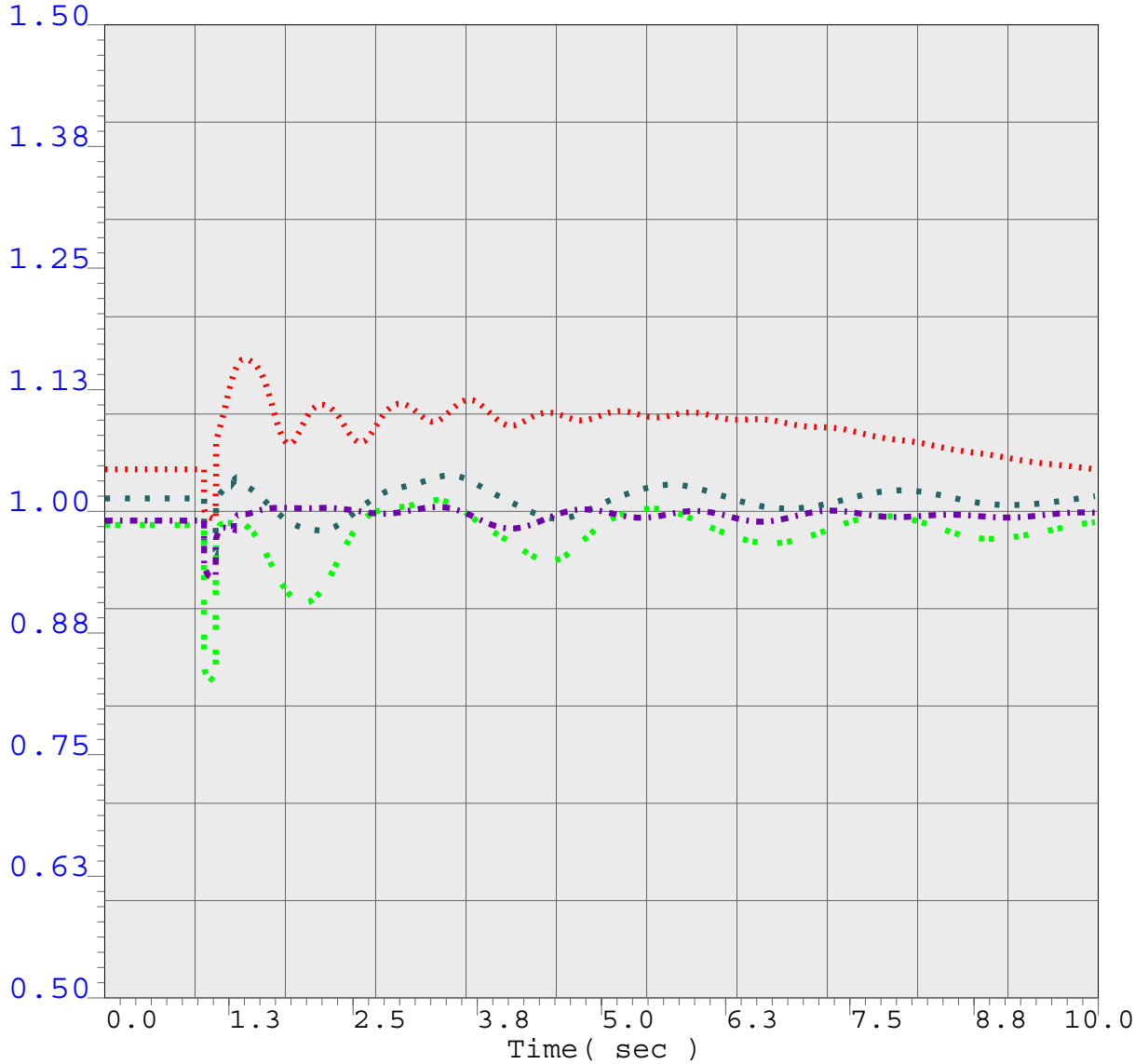

VICTORVILLE 2 PROJECT STUDIES

CASE NAME:sidewindermt\offpeak-postsm.sav

SCE [LOAD 16267 XCHGE -7135 GEN 10745][AA 1340V 2356M 1241D 1005VA]MW

[S.LUGO 3909MW][N.LUGO 1908MW][N.SONGS 1055MW][S.SONGS 1095MW]

[SYLMAR 865][VIC-LUGO 2033][EL-LUGO 1058][MHV-LUGO 648][PV-DV 2908]MW

BUS_FREQUENCY FOR SCE 230/115

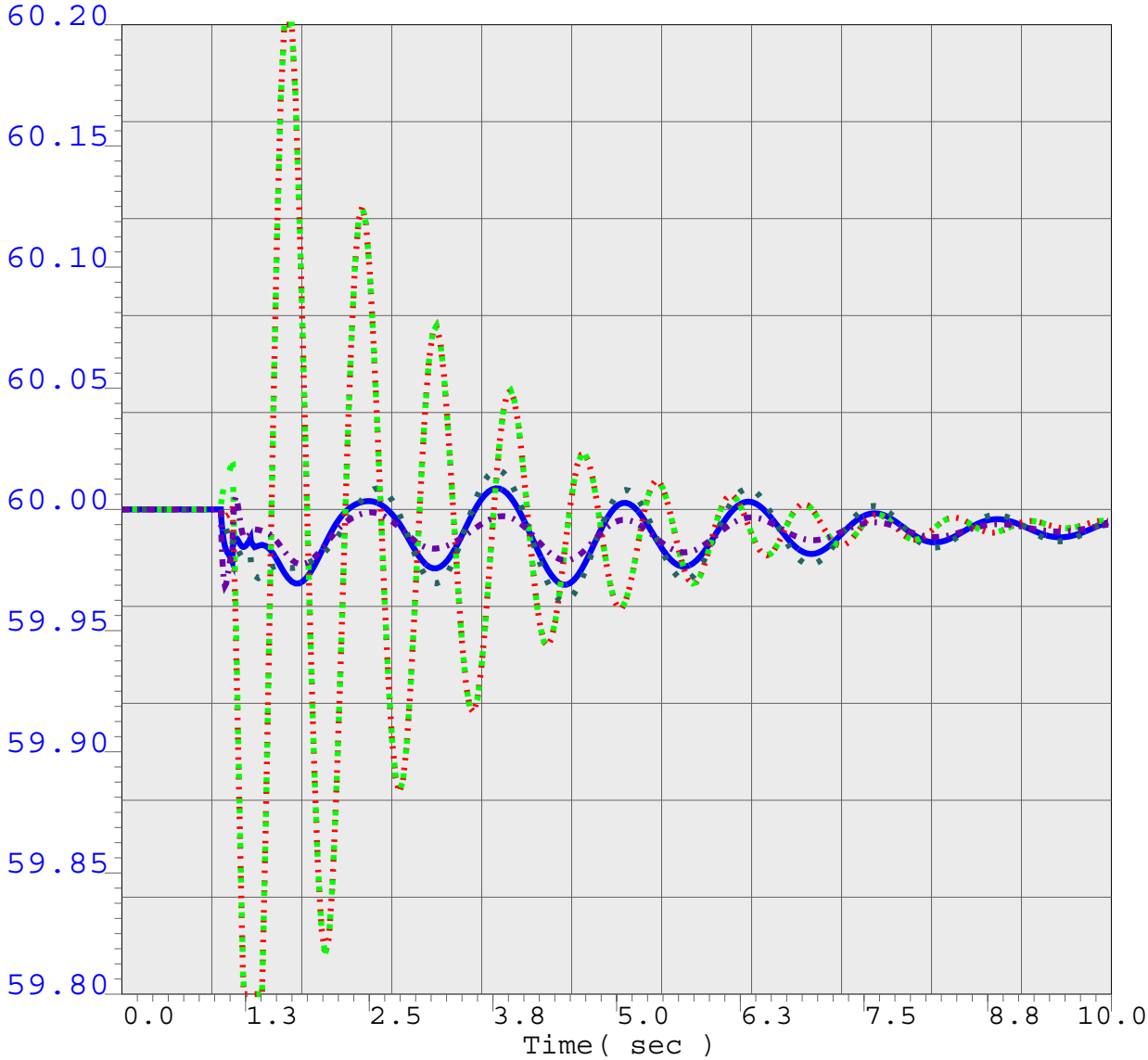

VICTORVILLE 2 PROJECT STUDIES

CASE NAME:sidewindermt\offpeak-postsm.sav

SCE [LOAD 16267 XCHGE -7135 GEN 10745][AA 1340V 2356M 1241D 1005VA]MW

[S.LUGO 3909MW][N.LUGO 1908MW][N.SONGS 1055MW][S.SONGS 1095MW]

[SYLMAR 865][VIC-LUGO 2033][EL-LUGO 1058][MHV-LUGO 648][PV-DV 2908]MW

MACHINE ANGLE

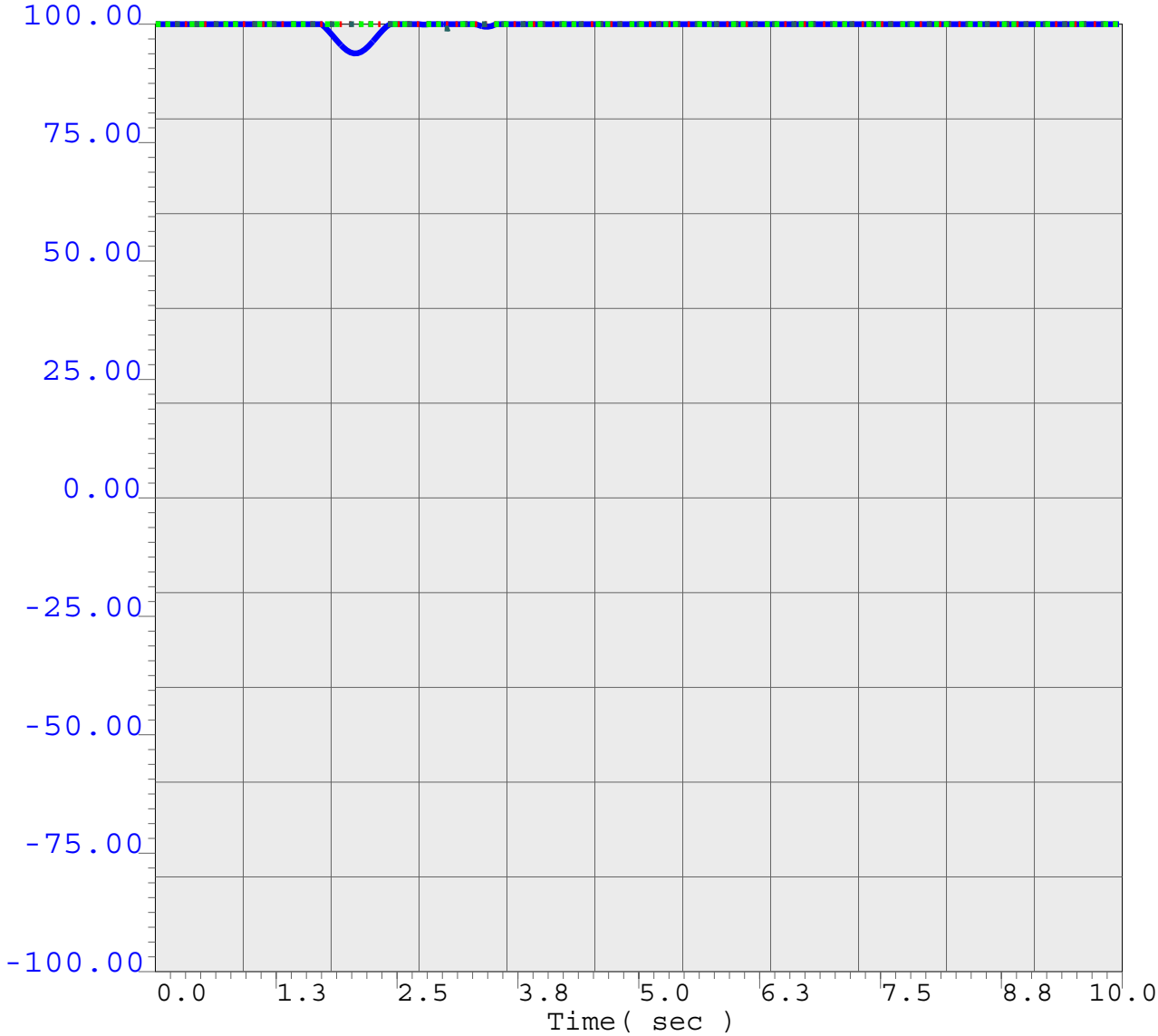

___	-100.0	ang	24714	ALTA 1G	13.8	1	1	100.0
....	-100.0	ang	24747	OXBOW G1	13.8	1	1	100.0
_ _	-100.0	ang	24709	BSPHYD26	2.2	1	1	100.0
_ .	-100.0	ang	24711	CALGEN1G	13.8	1	1	100.0
_._	-100.0	ang	24354		0.0	1		100.0

VICTORVILLE 2 PROJECT STUDIES

CASE NAME:sidewindermt\offpeak-postsm.sav

SCE [LOAD 16267 XCHGE -7135 GEN 10745][AA 1340V 2356M 1241D 1005VA]MW

[S.LUGO 3909MW][N.LUGO 1908MW][N.SONGS 1055MW][S.SONGS 1095MW]

[SYLMAR 865][VIC-LUGO 2033][EL-LUGO 1058][MHV-LUGO 648][PV-DV 2908]MW

```
RUN
*   3 phase 4 cycle fault at KRAMER
*   Loss of KRAMER   230.00 - LUGO   230.00 1
*
*  CC cards for post-transient only
*
*   Fault bus at KRAMER
FB   60.0 "KRAMER  " 230.
*
*   Clear fault at KRAMER
CFB  64.0 "KRAMER  " 230.
*
*   Trip KRAMER   230.00 - LUGO   230.00 1,
*
DL   64.0 "KRAMER  " 230. "LUGO    " 230. "1 "
*
*  Trip COOLWATER STs in 10 cycles after fault
*
TG   70.0 "ALTA 3ST"  13.80 "**"
TG   70.0 "ALTA 4ST"  13.80 "**"
*
*  Trip COOLWATER CTs in 16 cycles after fault
*
TG   75.0 "ALTA31GT"  13.80 "**"
TG   75.0 "ALTA41GT"  13.80 "**"
TG   75.0 "ALTA41GT"  13.80 "**"
TG   75.0 "ALTA42GT"  13.80 "**"
*
```

BUS_VOLT_MAG FOR NORTH OF LUGO 230/115

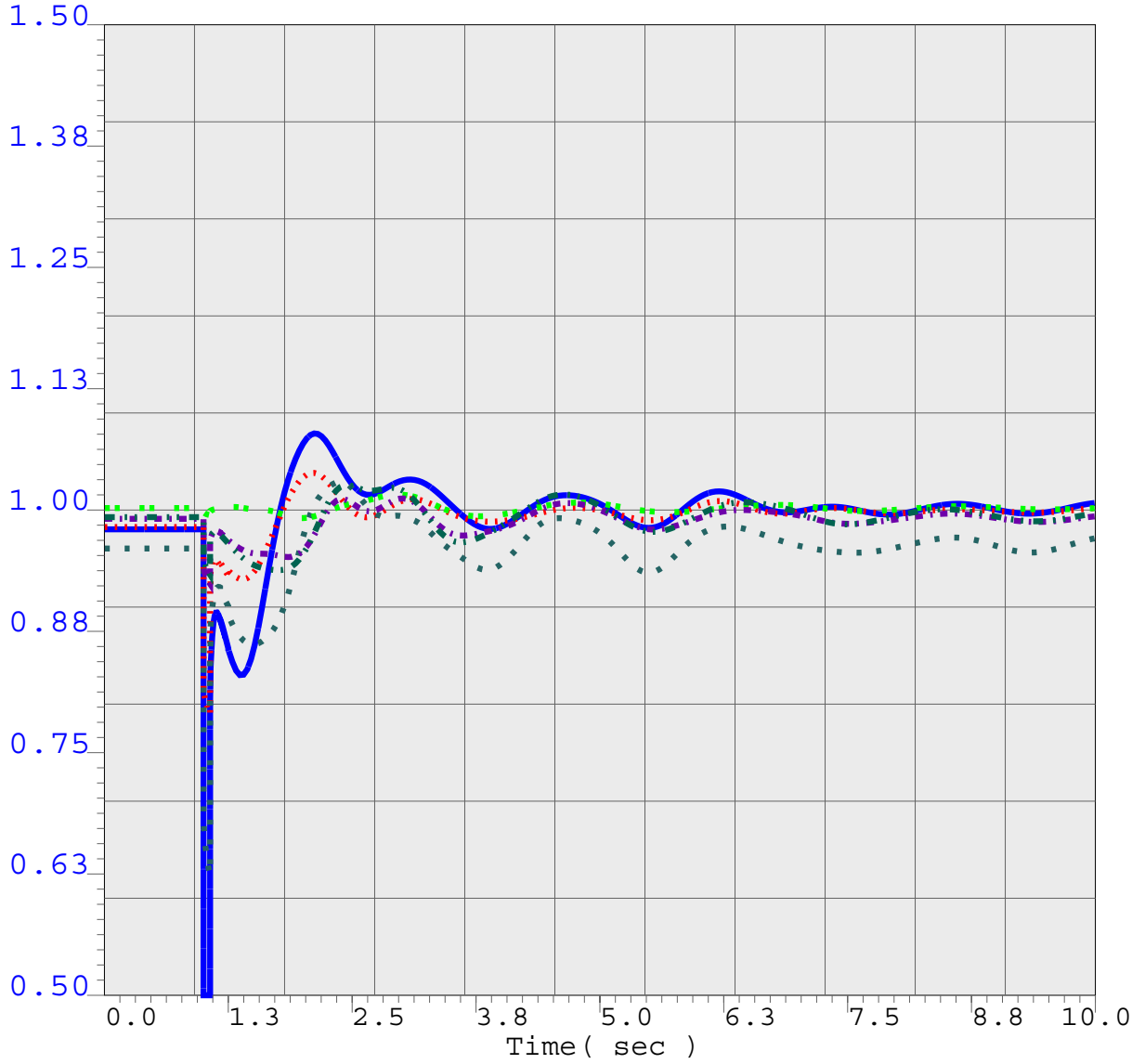

0.5	vbus	24701	KRAMER	230.0	1	1	1.5
0.5	vbus	24601	VICTOR	230.0	1	1	1.5
0.5	vbul	24731	INYOKERN	115.0	1	1	1.5
0.5	vbug	24747	OXBOW G1	13.8	1	1	1.5
0.5	vbus	24723	CONTROL	115.0	1	1	1.5
0.5	vbus	24730	INYO PS	115.0	1	1	1.5

VICTORVILLE 2 PROJECT STUDIES

CASE NAME:sidewindermt\offpeak-postsm.sav

SCE [LOAD 16267 XCHGE -7135 GEN 10745][AA 1340V 2356M 1241D 1005VA]MW

[S.LUGO 3909MW][N.LUGO 1908MW][N.SONGS 1055MW][S.SONGS 1095MW]

[SYLMAR 865][VIC-LUGO 2033][EL-LUGO 1058][MHV-LUGO 648][PV-DV 2908]MW

VV-2-2010SP-post_KRAMER-LUGO-SLO.chf

.

Fri Jul 21 16:53:16 2006

BUS_VOLT_MAG FOR NORTH OF LUGO 230/115

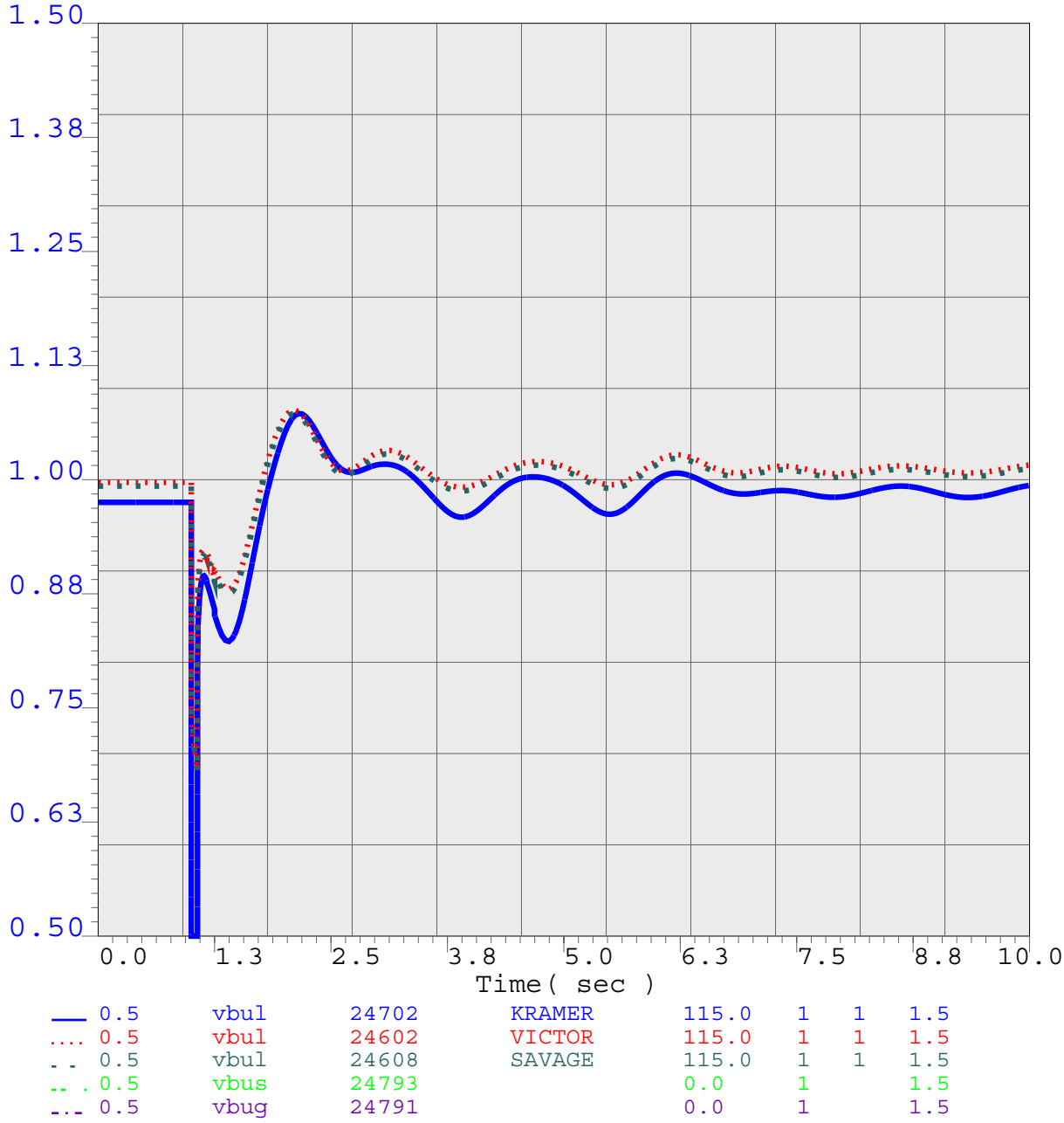

VICTORVILLE 2 PROJECT STUDIES

CASE NAME:sidewindermt\offpeak-postsm.sav

SCE [LOAD 16267 XCHGE -7135 GEN 10745][AA 1340V 2356M 1241D 1005VA]MW

[S.LUGO 3909MW][N.LUGO 1908MW][N.SONGS 1055MW][S.SONGS 1095MW]

[SYLMAR 865][VIC-LUGO 2033][EL-LUGO 1058][MHV-LUGO 648][PV-DV 2908]MW

BUS_VOLT_MAG FOR NORTH OF LUGO 230/115

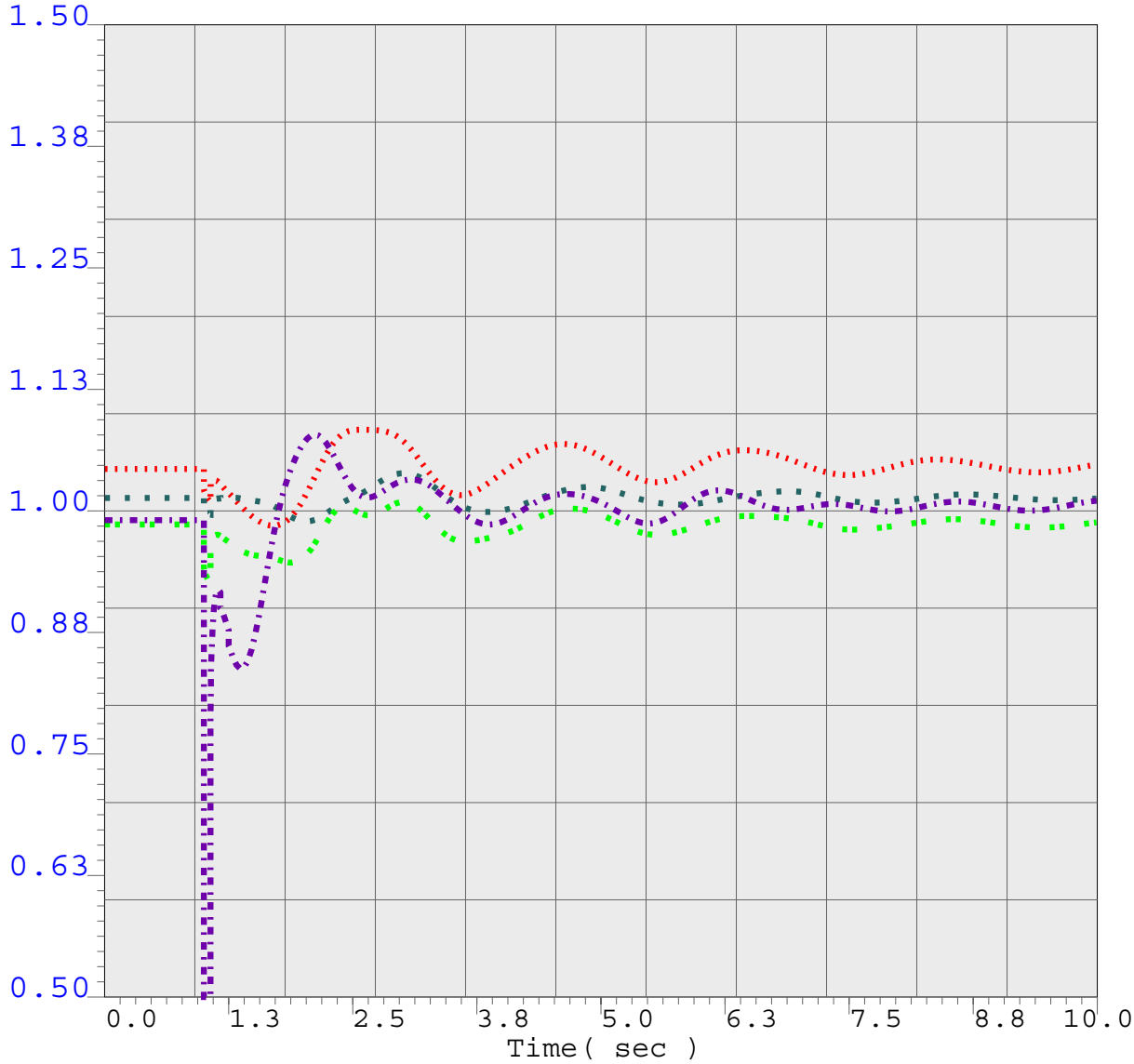

VICTORVILLE 2 PROJECT STUDIES

CASE NAME:sidewindermt\offpeak-postsm.sav

SCE [LOAD 16267 XCHGE -7135 GEN 10745][AA 1340V 2356M 1241D 1005VA]MW

[S.LUGO 3909MW][N.LUGO 1908MW][N.SONGS 1055MW][S.SONGS 1095MW]

[SYLMAR 865][VIC-LUGO 2033][EL-LUGO 1058][MHV-LUGO 648][PV-DV 2908]MW

BUS_FREQUENCY FOR SCE 230/115

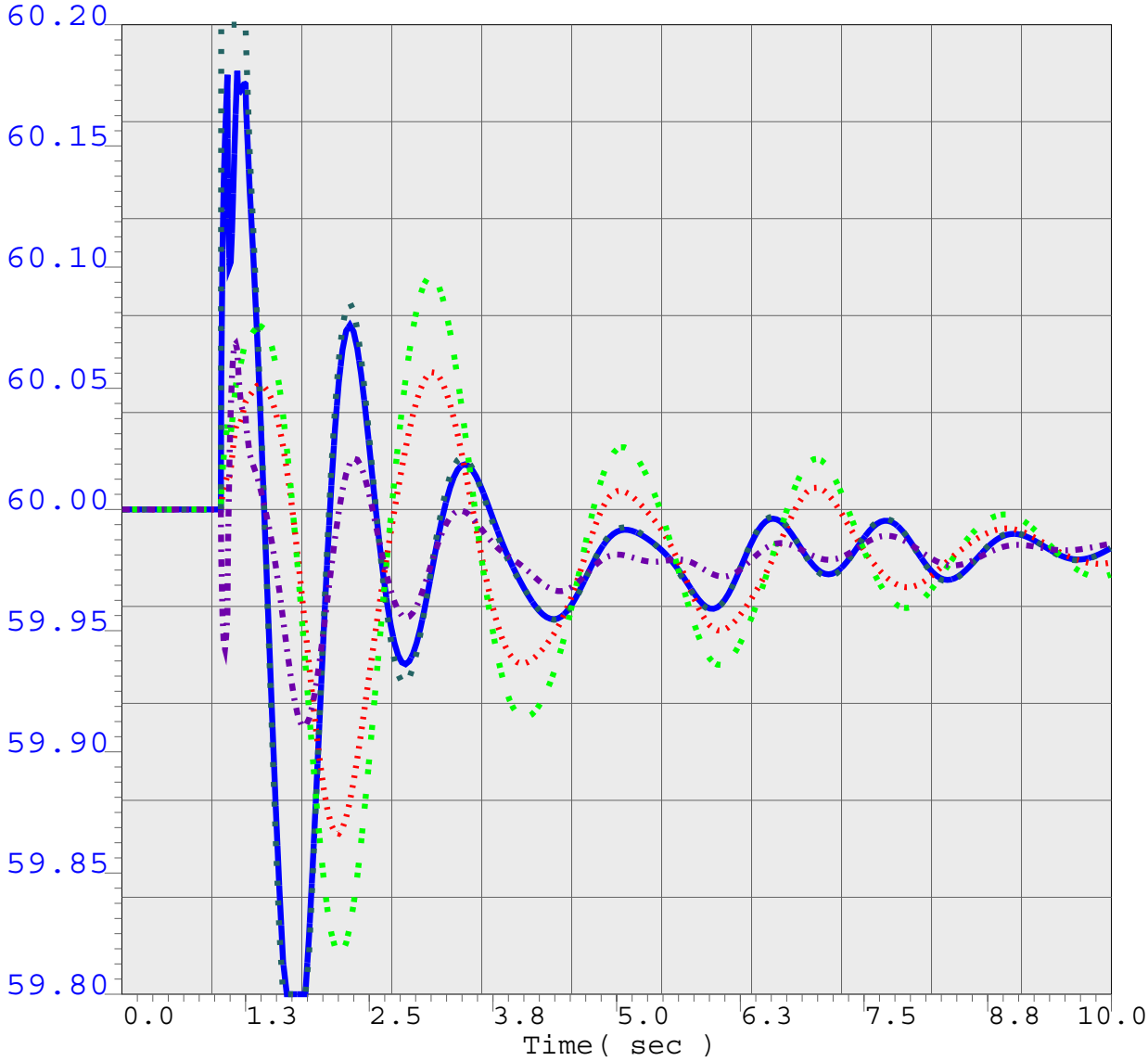

VICTORVILLE 2 PROJECT STUDIES

CASE NAME:sidewindermt\offpeak-postsm.sav

SCE [LOAD 16267 XCHGE -7135 GEN 10745][AA 1340V 2356M 1241D 1005VA]MW

[S.LUGO 3909MW][N.LUGO 1908MW][N.SONGS 1055MW][S.SONGS 1095MW]

[SYLMAR 865][VIC-LUGO 2033][EL-LUGO 1058][MHV-LUGO 648][PV-DV 2908]MW

MACHINE ANGLE

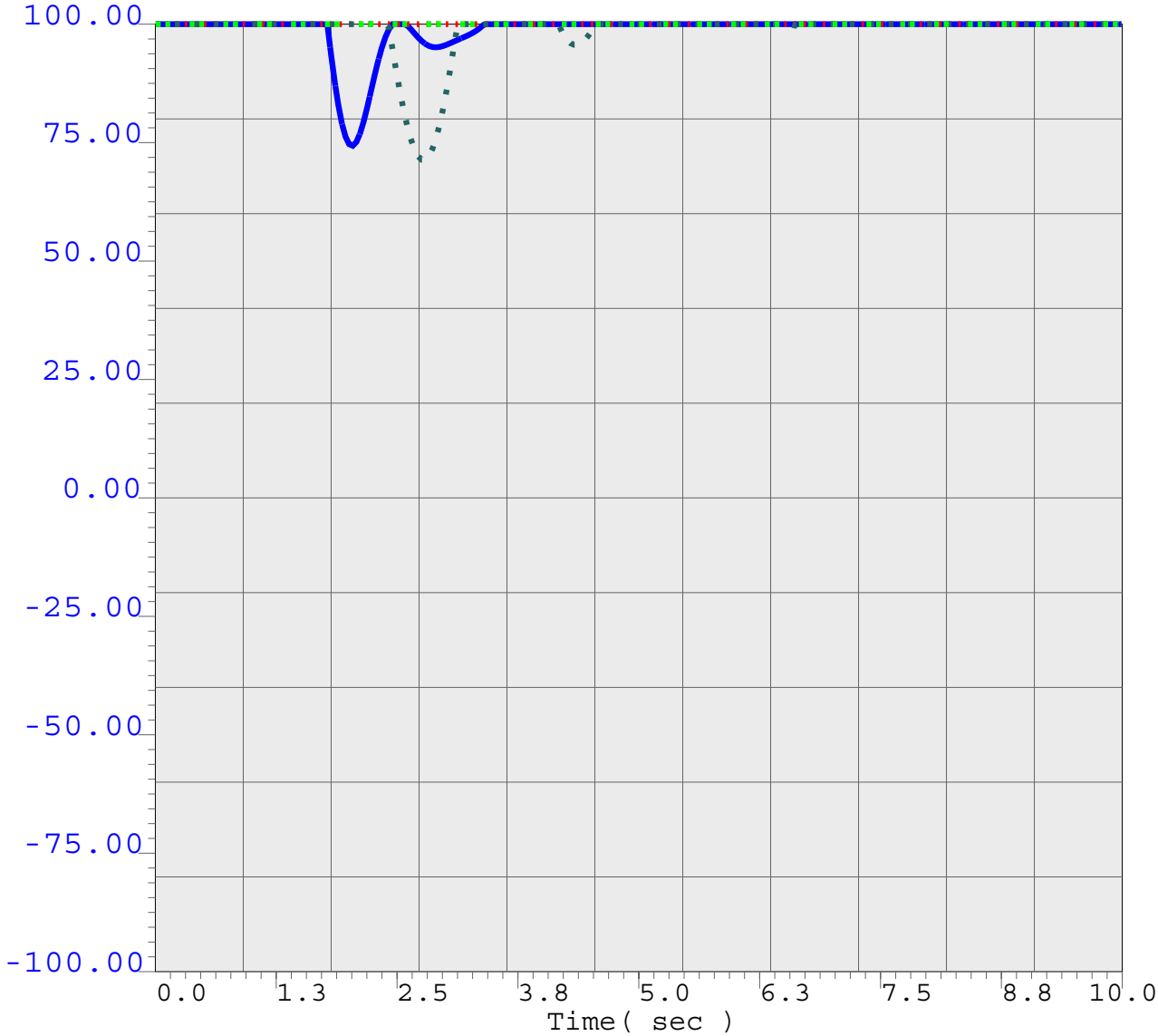

___	-100.0	ang	24714	ALTA 1G	13.8	1	1	100.0
....	-100.0	ang	24747	OXBOW G1	13.8	1	1	100.0
_ _	-100.0	ang	24709	BSPHYD26	2.2	1	1	100.0
_ _ .	-100.0	ang	24711	CALGEN1G	13.8	1	1	100.0
_._	-100.0	ang	24354		0.0	1		100.0

VICTORVILLE 2 PROJECT STUDIES

CASE NAME:sidewindermt\offpeak-postsm.sav

SCE [LOAD 16267 XCHGE -7135 GEN 10745][AA 1340V 2356M 1241D 1005VA]MW

[S.LUGO 3909MW][N.LUGO 1908MW][N.SONGS 1055MW][S.SONGS 1095MW]

[SYLMAR 865][VIC-LUGO 2033][EL-LUGO 1058][MHV-LUGO 648][PV-DV 2908]MW

```
RUN
*   3 phase 4 cycle fault at KRAMER
*   Loss of KRAMER   230.00 - LUGO   230.00 1 & VICTOR   230.00 - LUGO
230.00 1
*
*  CC cards for post-transient only
*
*   Fault bus at KRAMER
FB   60.0 "KRAMER  " 230.
* slg: FB   0.0 "KRAMER  " 230. .00072  .0076
*
*   Clear fault at KRAMER
CFB  64.0 "KRAMER  " 230.
*
*   Trip KRAMER   230.00 - LUGO   230.00 1 & VICTOR   230.00 - LUGO     230.00
1
*
DL   64.0 "KRAMER  " 230. "LUGO    " 230. "1 "
DL   64.0 "VICTOR  " 230. "LUGO    " 230. "1 "
*
*  Trip COOLWATER STs in 10 cycles after fault
*
TG   70.0 "ALTA 3ST"  13.80 "**"
TG   70.0 "ALTA 4ST"  13.80 "**"
*
*  Trip HDPP in 12 cycles after fault
*
TG   72.0 "HIDESST1"  20.00 "**"
TG   72.0 "HIDESCT1"  15.00 "**"
*
*  Trip COOLWATER CTs in 16 cycles after fault
*
TG   76.0 "ALTA 3GT"  13.80 "**"
TG   76.0 "ALTA 4GT"  13.80 "**"
*
```

BUS_VOLT_MAG FOR NORTH OF LUGO 230/115

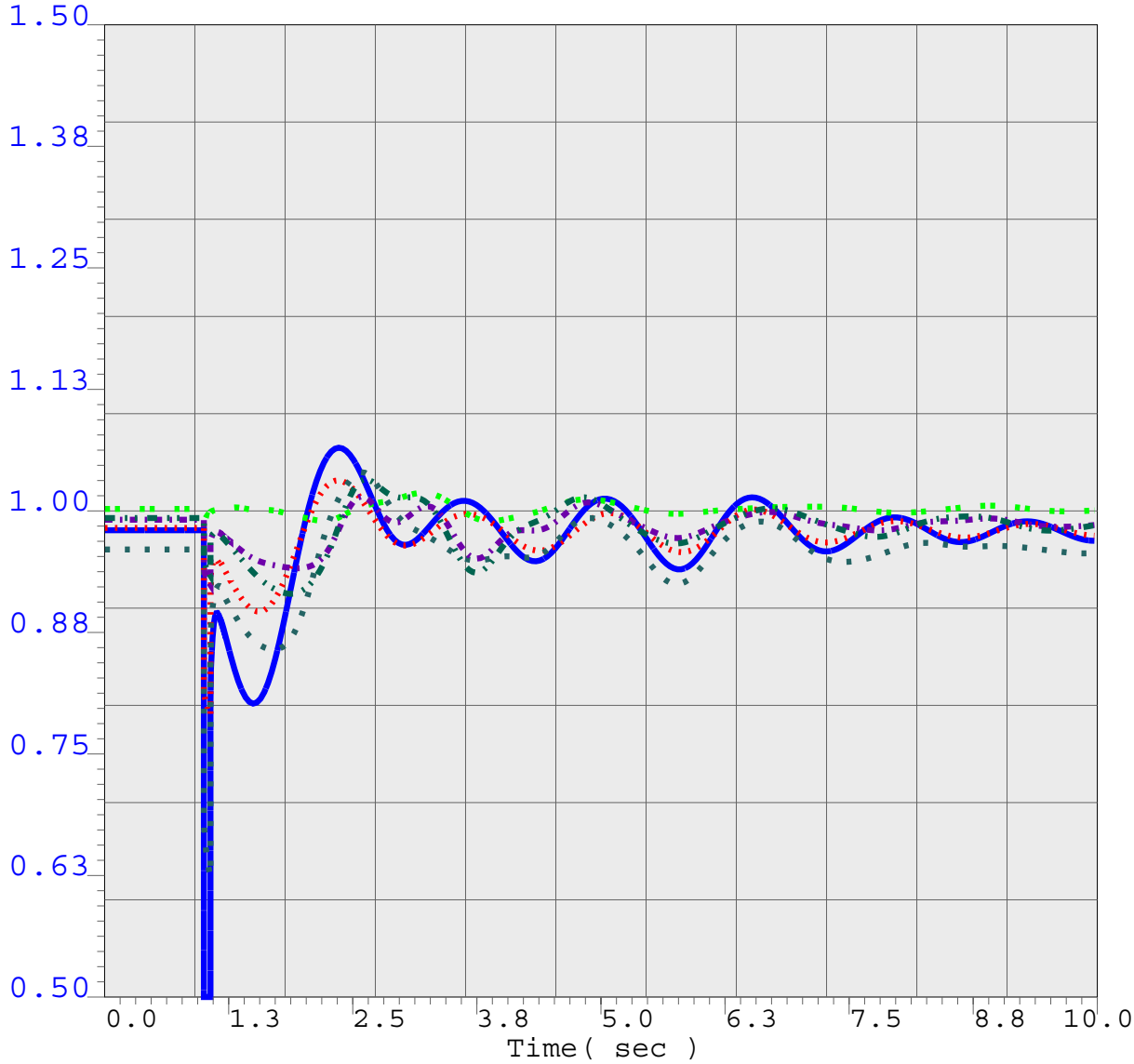

0.5	vbus	24701	KRAMER	230.0	1	1	1.5
0.5	vbus	24601	VICTOR	230.0	1	1	1.5
0.5	vbul	24731	INYOKERN	115.0	1	1	1.5
0.5	vbug	24747	OXBOW G1	13.8	1	1	1.5
0.5	vbus	24723	CONTROL	115.0	1	1	1.5
0.5	vbus	24730	INYO PS	115.0	1	1	1.5

VICTORVILLE 2 PROJECT STUDIES

CASE NAME:sidewindermt\offpeak-postsm.sav

SCE [LOAD 16267 XCHGE -7135 GEN 10745][AA 1340V 2356M 1241D 1005VA]MW

[S.LUGO 3909MW][N.LUGO 1908MW][N.SONGS 1055MW][S.SONGS 1095MW]

[SYLMAR 865][VIC-LUGO 2033][EL-LUGO 1058][MHV-LUGO 648][PV-DV 2908]MW

VV-2-2010SP-post_KRAMER-LUGO-VIC-LUGO-DLO.chf

.

Fri Jul 21 16:53:18 2006

BUS_VOLT_MAG FOR NORTH OF LUGO 230/115

VICTORVILLE 2 PROJECT STUDIES

CASE NAME:sidewindermt\offpeak-postsm.sav

SCE [LOAD 16267 XCHGE -7135 GEN 10745][AA 1340V 2356M 1241D 1005VA]MW

[S.LUGO 3909MW][N.LUGO 1908MW][N.SONGS 1055MW][S.SONGS 1095MW]

[SYLMAR 865][VIC-LUGO 2033][EL-LUGO 1058][MHV-LUGO 648][PV-DV 2908]MW

BUS_VOLT_MAG FOR NORTH OF LUGO 230/115

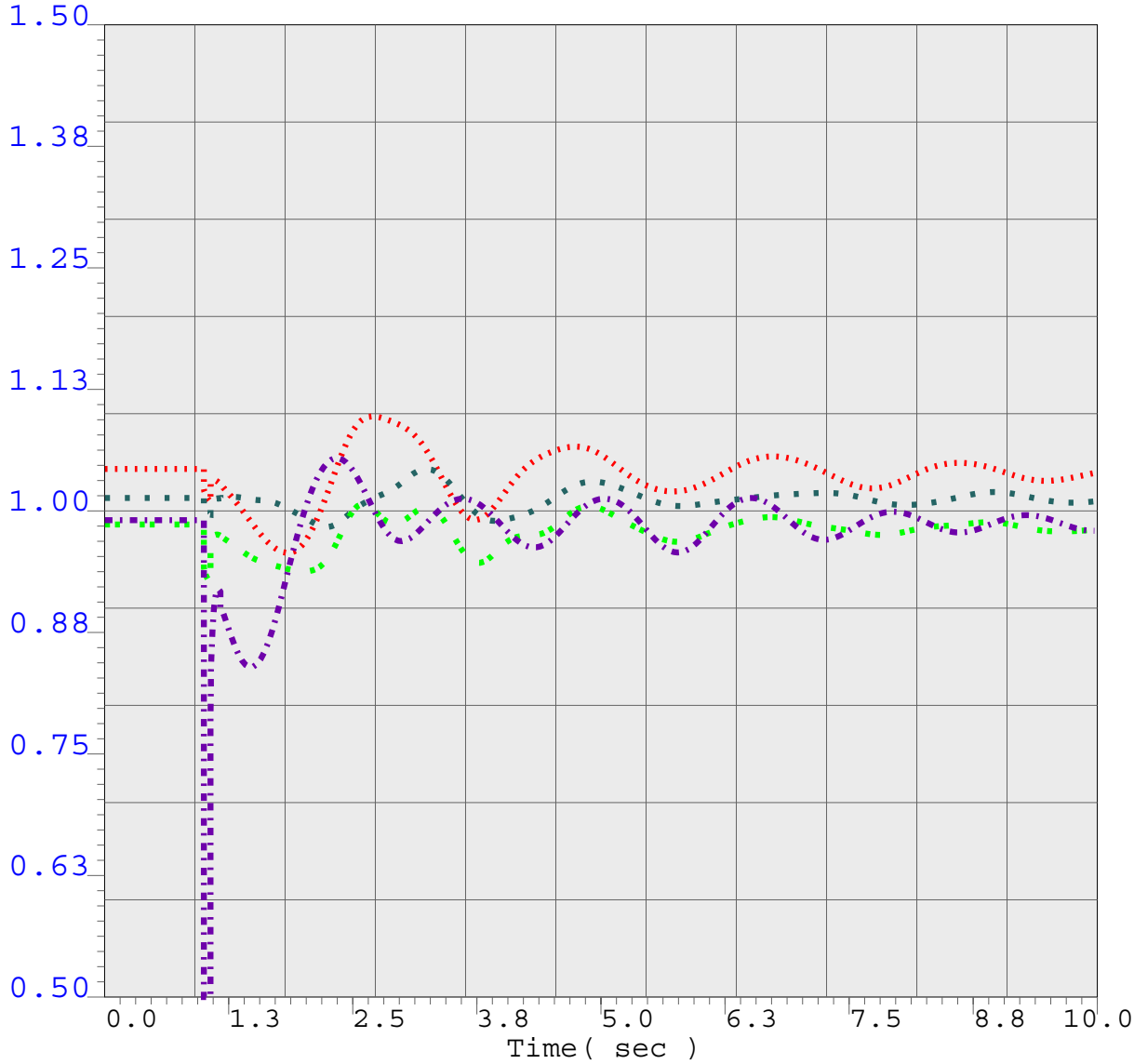

VICTORVILLE 2 PROJECT STUDIES

CASE NAME:sidewindermt\offpeak-postsm.sav

SCE [LOAD 16267 XCHGE -7135 GEN 10745][AA 1340V 2356M 1241D 1005VA]MW

[S.LUGO 3909MW][N.LUGO 1908MW][N.SONGS 1055MW][S.SONGS 1095MW]

[SYLMAR 865][VIC-LUGO 2033][EL-LUGO 1058][MHV-LUGO 648][PV-DV 2908]MW

BUS_FREQUENCY FOR SCE 230/115

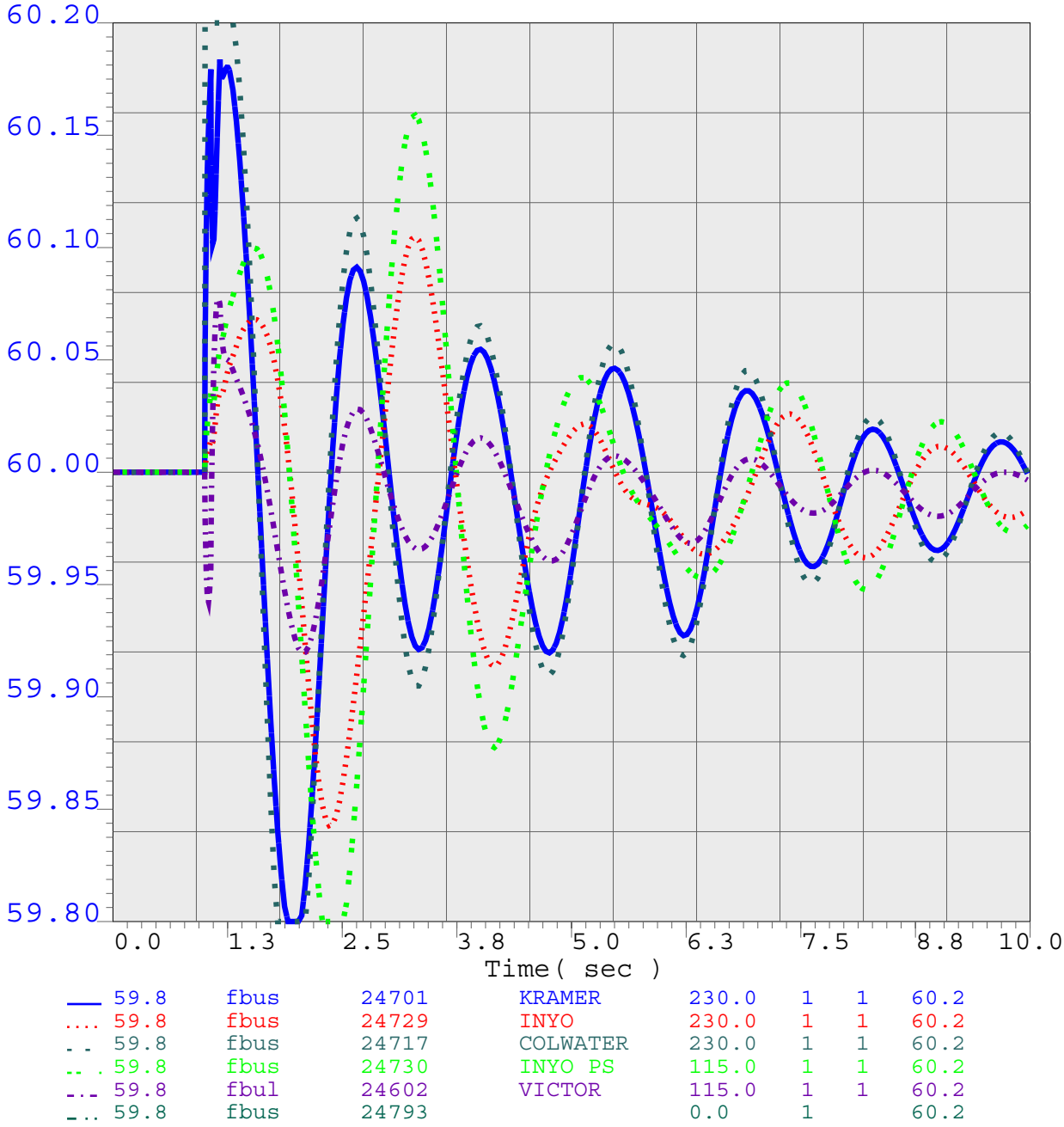

VICTORVILLE 2 PROJECT STUDIES

CASE NAME:sidewindermt\offpeak-postsm.sav

SCE [LOAD 16267 XCHGE -7135 GEN 10745][AA 1340V 2356M 1241D 1005VA]MW

[S.LUGO 3909MW][N.LUGO 1908MW][N.SONGS 1055MW][S.SONGS 1095MW]

[SYLMAR 865][VIC-LUGO 2033][EL-LUGO 1058][MHV-LUGO 648][PV-DV 2908]MW

MACHINE ANGLE

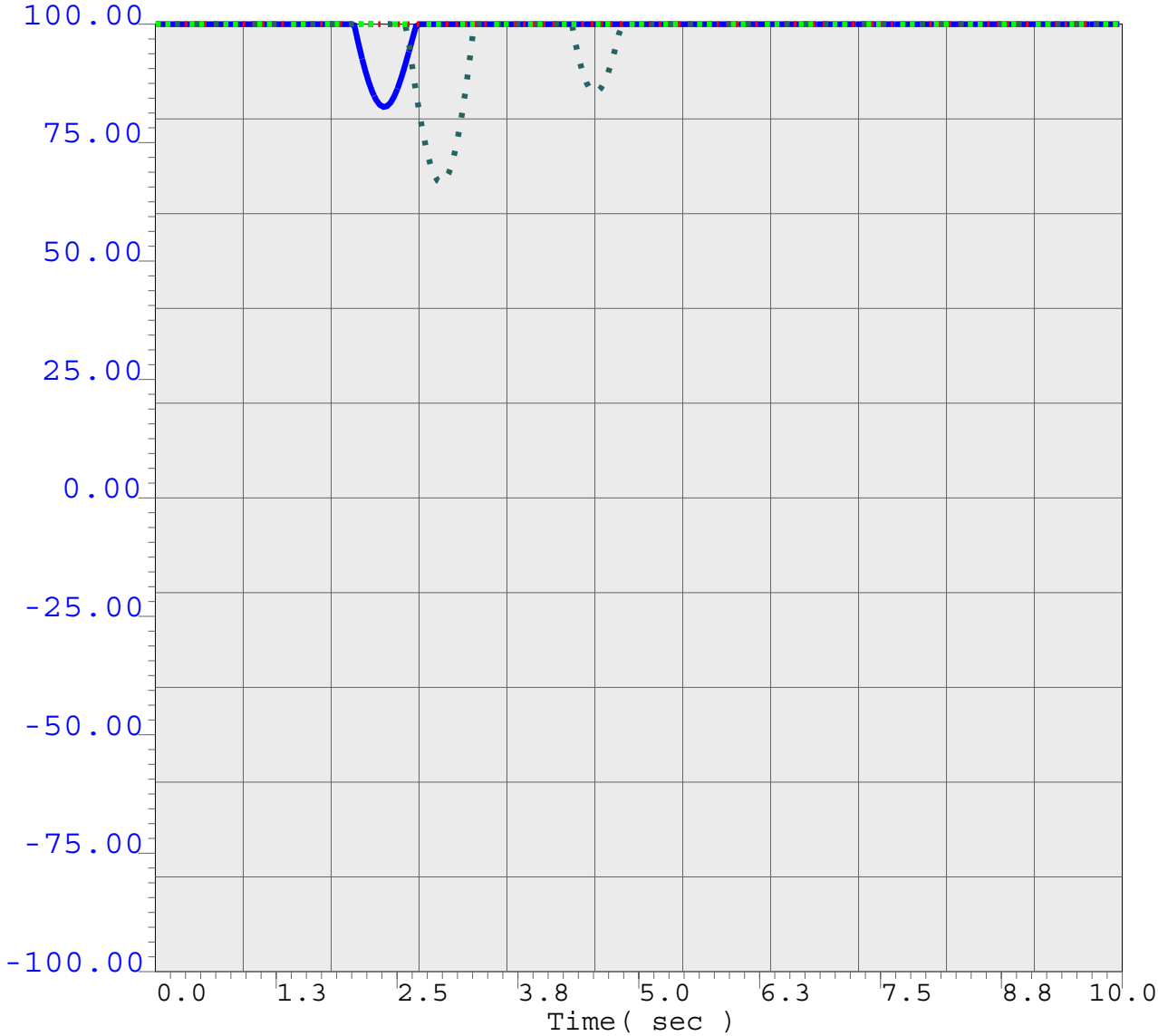

___	-100.0	ang	24714	ALTA 1G	13.8	1	1	100.0
....	-100.0	ang	24747	OXBOW G1	13.8	1	1	100.0
_ _	-100.0	ang	24709	BSPHYD26	2.2	1	1	100.0
_ _ .	-100.0	ang	24711	CALGEN1G	13.8	1	1	100.0
_ _ _	-100.0	ang	24354		0.0	1		100.0

VICTORVILLE 2 PROJECT STUDIES

CASE NAME:sidewindermt\offpeak-postsm.sav

SCE [LOAD 16267 XCHGE -7135 GEN 10745][AA 1340V 2356M 1241D 1005VA]MW

[S.LUGO 3909MW][N.LUGO 1908MW][N.SONGS 1055MW][S.SONGS 1095MW]

[SYLMAR 865][VIC-LUGO 2033][EL-LUGO 1058][MHV-LUGO 648][PV-DV 2908]MW

```
RUN
*   3 phase 4 cycle fault at KRAMER
*   Loss of KRAMER   230.00 - LUGO   230.00 1 & 2
*
*  CC cards for post-transient only
*
*   Fault bus at KRAMER
FB   60.0 "KRAMER  " 230.
* slg: FB   0.0 "KRAMER  " 230. .00072  .0076
*
*   Clear fault at KRAMER
CFB  64.0 "KRAMER  " 230.
*
*   Trip KRAMER   230.00 - LUGO   230.00 1 & 2
*
DL   64.0 "KRAMER  " 230. "LUGO    " 230. "1 "
DL   64.0 "KRAMER  " 230. "LUGO    " 230. "2 "
*
*  Trip COOLWATER, LSP and BLM STs in 10 cycles after fault
*
TG   70.0 "ALTA 3ST"  13.80 "**"
TG   70.0 "ALTA 4ST"  13.80 "**"
*
DL   70.0 "LUZ LSP " 230. "KRAMER  " 230. "1 "
TG   70.0 "LUZ8  G "  13.80 "**"
TG   70.0 "LUZ9  G "  13.80 "**"
*
DL   70.0 "BLM WEST" 230. "KRAMER  " 230. "1 "
TG   70.0 "NAVYII4G"  13.80 "**"
TG   70.0 "NAVYII5G"  13.80 "**"
TG   70.0 "NAVYII6G"  13.80 "**"
TG   70.0 "BLM  E7G"  13.80 "**"
TG   70.0 "BLM  E8G"  13.80 "**"
TG   70.0 "BLM  W9G"  13.80 "**"
*
*  Trip CASA DIABLO etc. in 12 cycles after fault
*
TG   72.0 "OXBOW G1"  13.80 "**"
*
*  Trip COOLWATER CTs in 16 cycles after fault
*
TG   76.0 "ALTA 3GT"  13.80 "**"
TG   76.0 "ALTA 4GT"  13.80 "**"
*
```

BUS_VOLT_MAG FOR NORTH OF LUGO 230/115

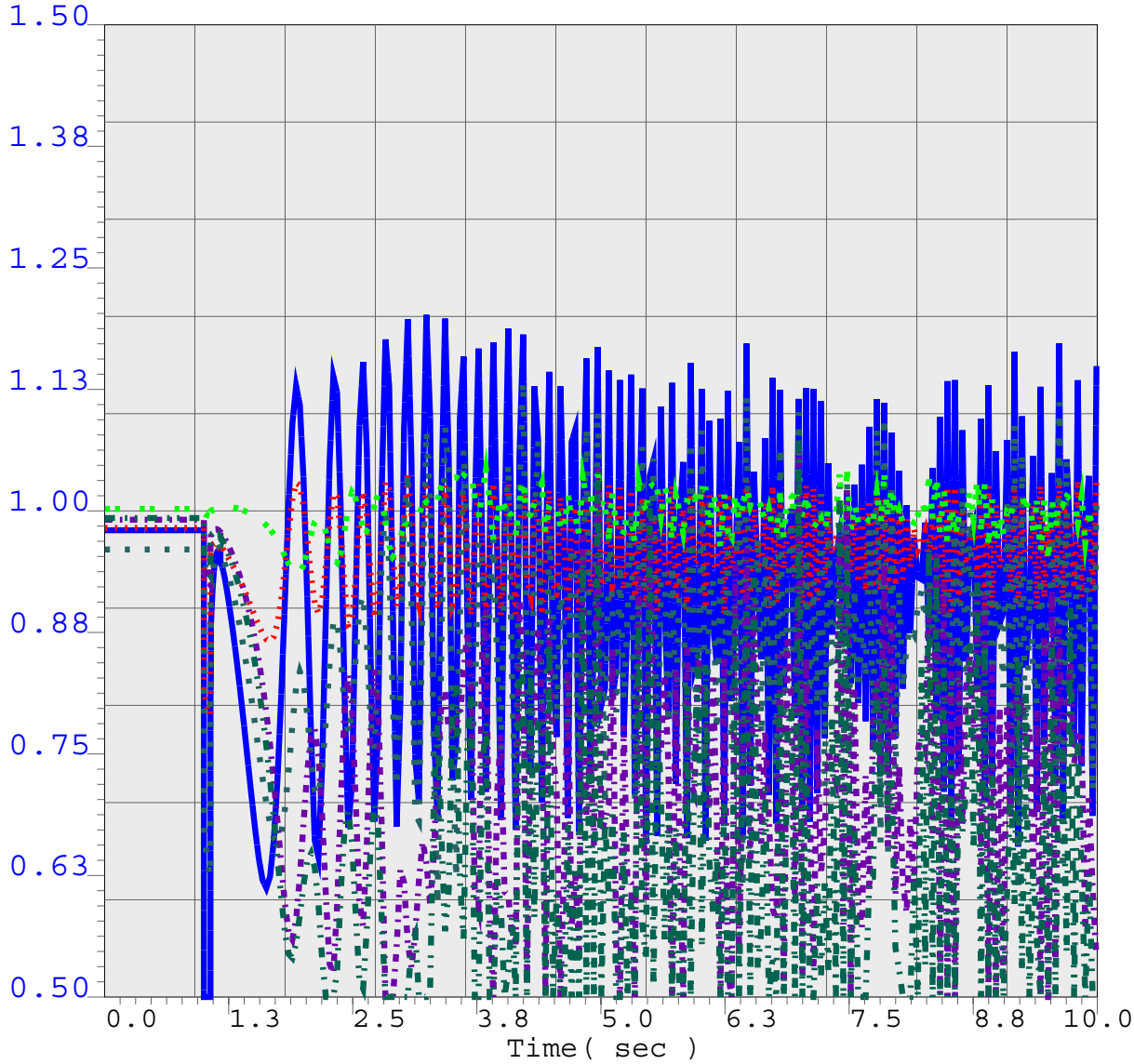

0.5	vbus	24701	KRAMER	230.0	1	1	1.5
0.5	vbus	24601	VICTOR	230.0	1	1	1.5
0.5	vbul	24731	INYOKERN	115.0	1	1	1.5
0.5	vbug	24747	OXBOW G1	13.8	1	1	1.5
0.5	vbus	24723	CONTROL	115.0	1	1	1.5
0.5	vbus	24730	INYO PS	115.0	1	1	1.5

VICTORVILLE 2 PROJECT STUDIES

CASE NAME:sidewindermt\offpeak-postsm.sav

SCE [LOAD 16267 XCHGE -7135 GEN 10745][AA 1340V 2356M 1241D 1005VA]MW

[S.LUGO 3909MW][N.LUGO 1908MW][N.SONGS 1055MW][S.SONGS 1095MW]

[SYLMAR 865][VIC-LUGO 2033][EL-LUGO 1058][MHV-LUGO 648][PV-DV 2908]MW

BUS_VOLT_MAG FOR NORTH OF LUGO 230/115

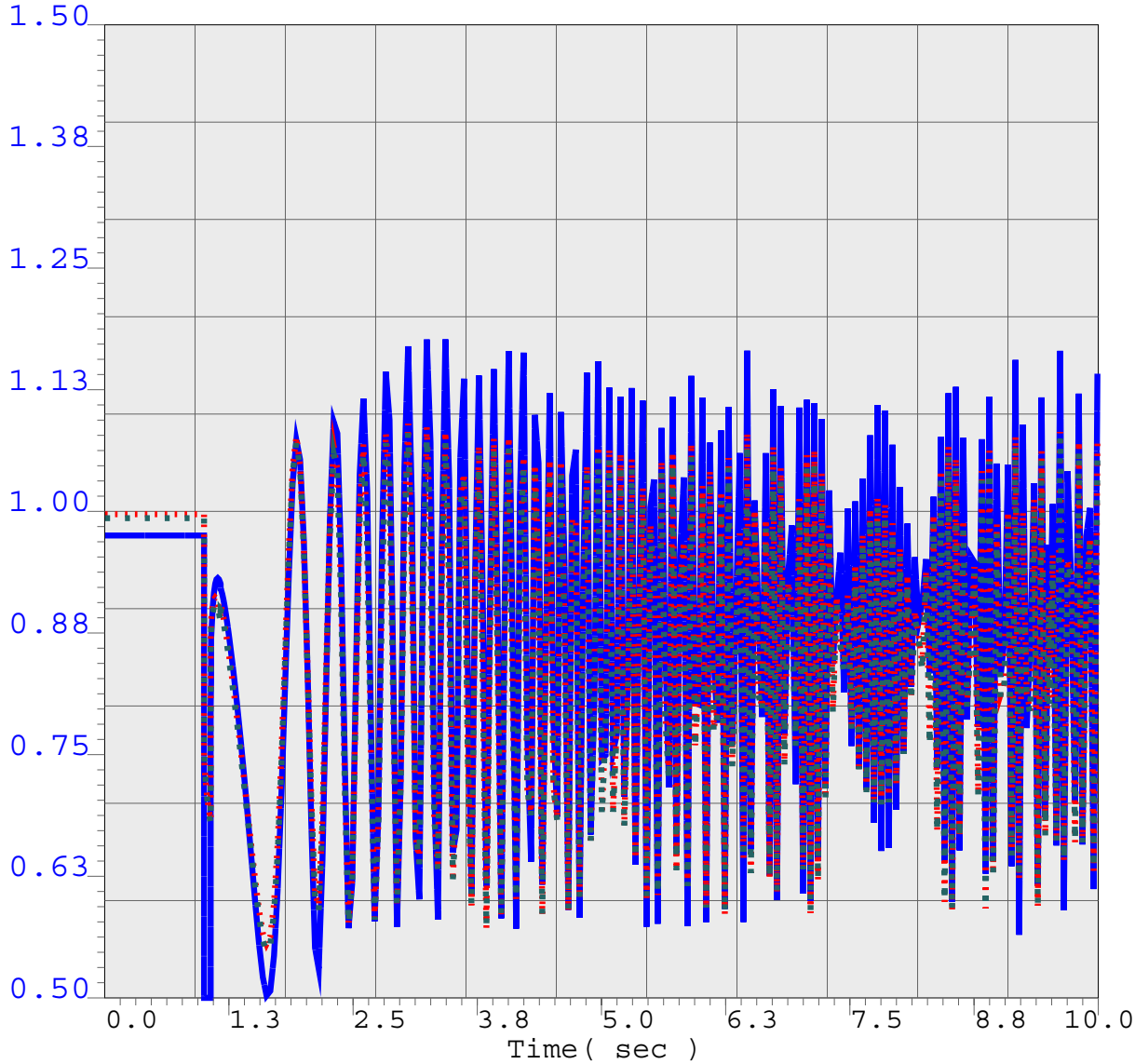

0.5	vbul	24702	KRAMER	115.0	1	1	1.5
0.5	vbul	24602	VICTOR	115.0	1	1	1.5
0.5	vbul	24608	SAVAGE	115.0	1	1	1.5
0.5	vbus	24793		0.0	1		1.5
0.5	vbug	24791		0.0	1		1.5

VICTORVILLE 2 PROJECT STUDIES

CASE NAME:sidewindermt\offpeak-postsm.sav

SCE [LOAD 16267 XCHGE -7135 GEN 10745][AA 1340V 2356M 1241D 1005VA]MW

[S.LUGO 3909MW][N.LUGO 1908MW][N.SONGS 1055MW][S.SONGS 1095MW]

[SYLMAR 865][VIC-LUGO 2033][EL-LUGO 1058][MHV-LUGO 648][PV-DV 2908]MW

BUS_VOLT_MAG FOR NORTH OF LUGO 230/115

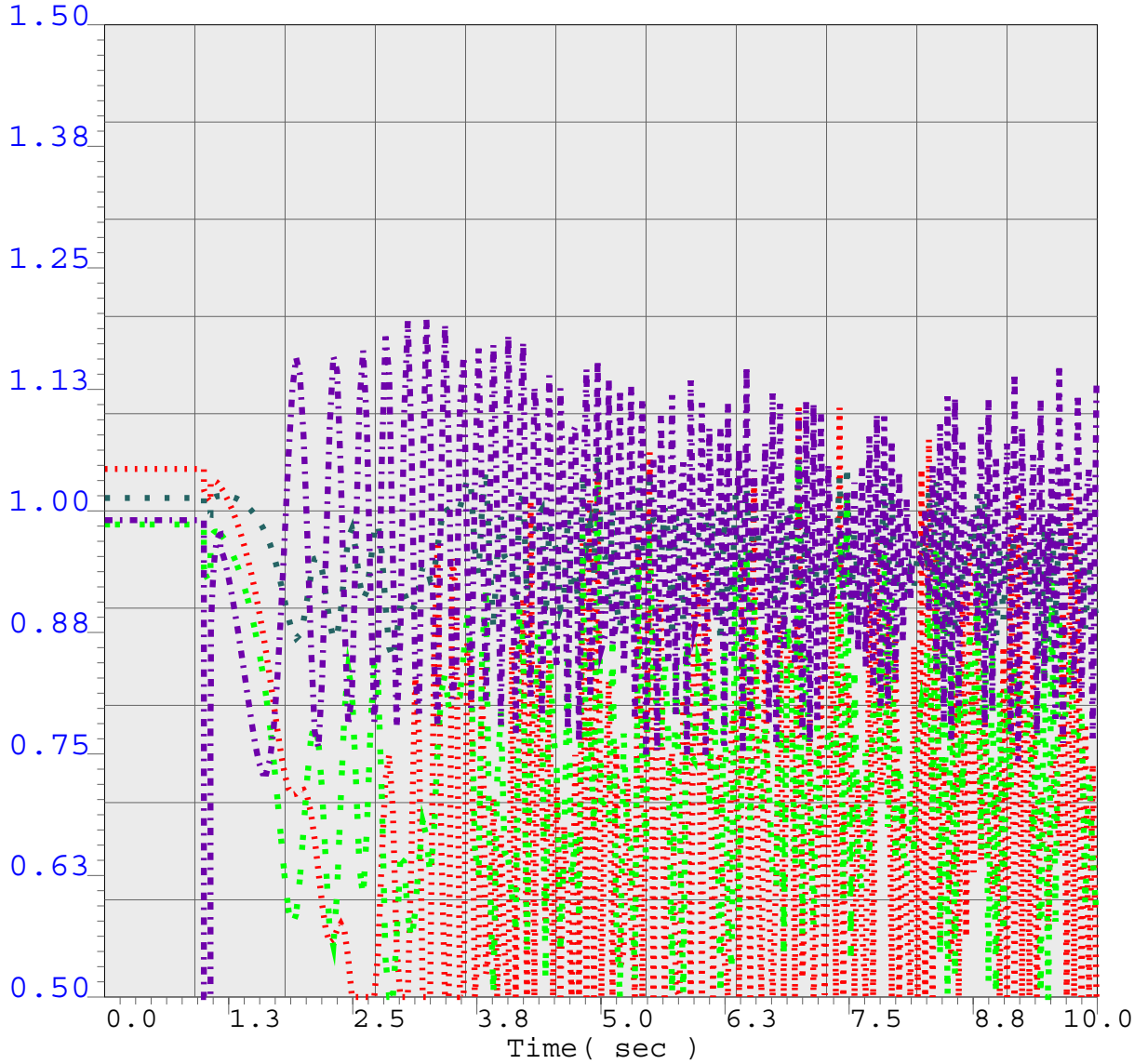

VICTORVILLE 2 PROJECT STUDIES

CASE NAME:sidewindermt\offpeak-postsm.sav

SCE [LOAD 16267 XCHGE -7135 GEN 10745][AA 1340V 2356M 1241D 1005VA]MW

[S.LUGO 3909MW][N.LUGO 1908MW][N.SONGS 1055MW][S.SONGS 1095MW]

[SYLMAR 865][VIC-LUGO 2033][EL-LUGO 1058][MHV-LUGO 648][PV-DV 2908]MW

BUS_FREQUENCY FOR SCE 230/115

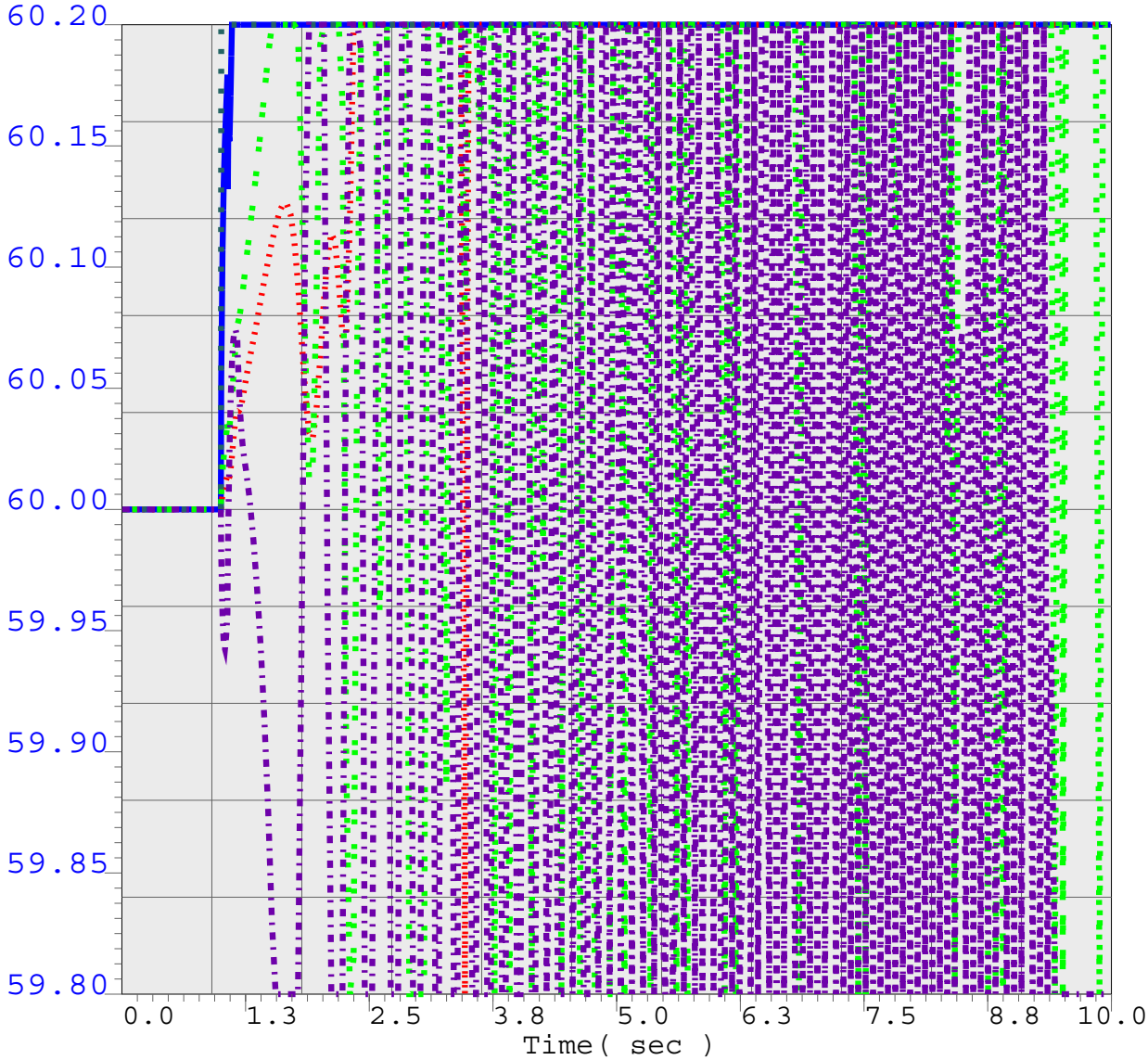

VICTORVILLE 2 PROJECT STUDIES

CASE NAME:sidewindermt\offpeak-postsm.sav

SCE [LOAD 16267 XCHGE -7135 GEN 10745][AA 1340V 2356M 1241D 1005VA]MW

[S.LUGO 3909MW][N.LUGO 1908MW][N.SONGS 1055MW][S.SONGS 1095MW]

[SYLMAR 865][VIC-LUGO 2033][EL-LUGO 1058][MHV-LUGO 648][PV-DV 2908]MW

MACHINE ANGLE

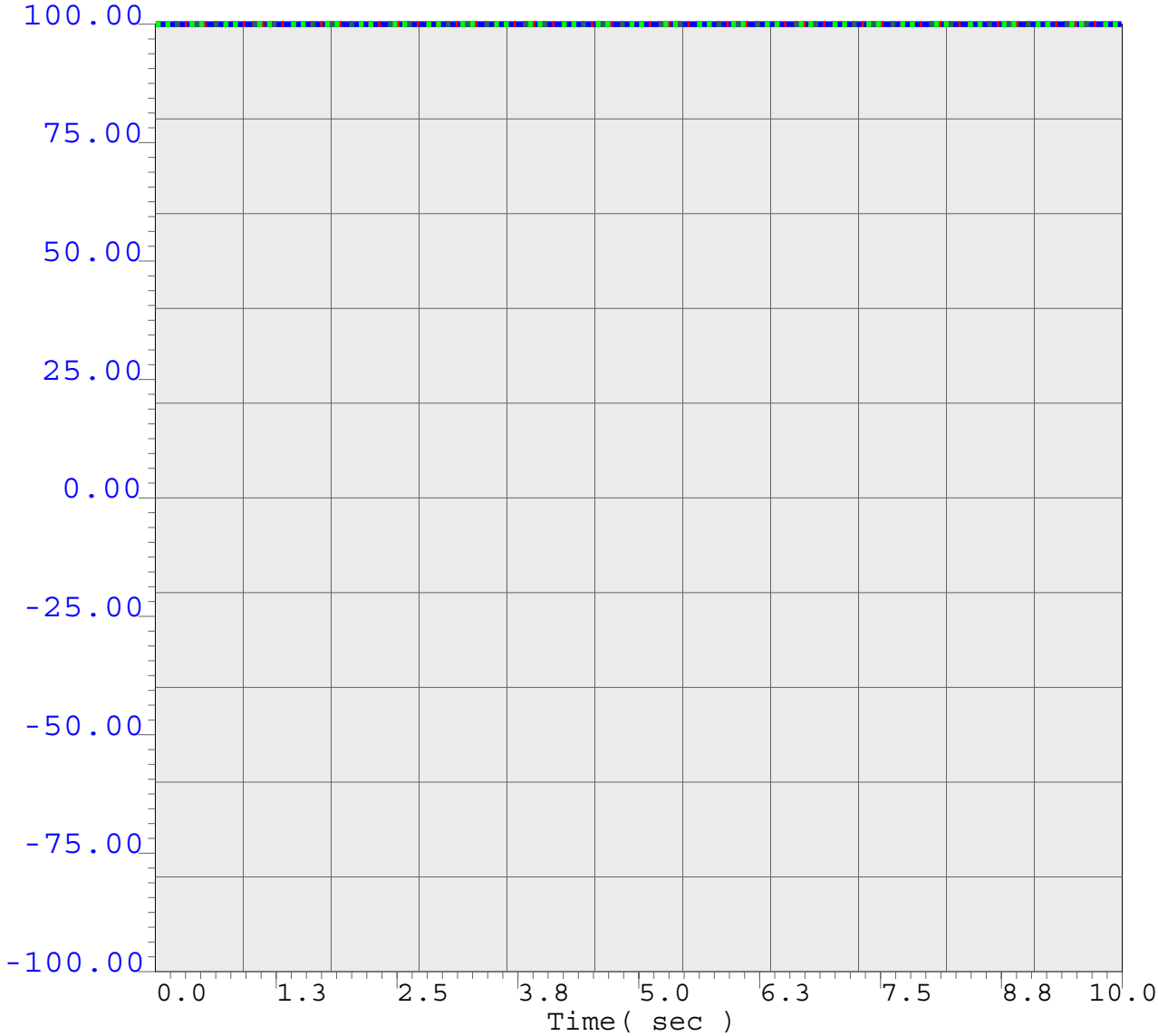

___	-100.0	ang	24714	ALTA 1G	13.8	1	1	100.0
....	-100.0	ang	24747	OXBOW G1	13.8	1	1	100.0
_ _	-100.0	ang	24709	BSPHYD26	2.2	1	1	100.0
_ .	-100.0	ang	24711	CALGEN1G	13.8	1	1	100.0
_._	-100.0	ang	24354		0.0	1		100.0

VICTORVILLE 2 PROJECT STUDIES

CASE NAME:sidewindermt\offpeak-postsm.sav

SCE [LOAD 16267 XCHGE -7135 GEN 10745][AA 1340V 2356M 1241D 1005VA]MW

[S.LUGO 3909MW][N.LUGO 1908MW][N.SONGS 1055MW][S.SONGS 1095MW]

[SYLMAR 865][VIC-LUGO 2033][EL-LUGO 1058][MHV-LUGO 648][PV-DV 2908]MW

```
RUN
*   3 phase 4 cycle fault at KRAMER
*   Loss of KRAMER   230.00 - LUGO   230.00 1 & 2
*
*  CC cards for post-transient only
*
*   Fault bus at KRAMER
FB   60.0 "KRAMER  " 230.
*
*
*   Clear fault at KRAMER
CFB  64.0 "KRAMER  " 230.
*
*   Trip KRAMER   230.00 - LUGO   230.00 1 & 2
*
DL   64.0 "KRAMER  " 230. "LUGO    " 230. "1 "
DL   64.0 "KRAMER  " 230. "LUGO    " 230. "2 "
*
*  Trip COOLWATER, LSP and BLM STs in 10 cycles after fault
*
TG   70.0 "ALTA 3ST"  13.80 "**"
TG   70.0 "ALTA 4ST"  13.80 "**"
*
DL   70.0 "LUZ LSP " 230. "KRAMER  " 230. "1 "
TG   70.0 "LUZ8  G "  13.80 "**"
TG   70.0 "LUZ9  G "  13.80 "**"
*
DL   70.0 "BLM WEST" 230. "KRAMER  " 230. "1 "
TG   70.0 "NAVYII4G"  13.80 "**"
TG   70.0 "NAVYII5G"  13.80 "**"
TG   70.0 "NAVYII6G"  13.80 "**"
TG   70.0 "BLM  E7G"  13.80 "**"
TG   70.0 "BLM  E8G"  13.80 "**"
TG   70.0 "BLM  W9G"  13.80 "**"
*
*  Trip OXBOW
TG   72.0 "OXBOW G1"  13.80 "**"
*
*  Trip COOLWATER CTs in 16 cycles after fault
*
TG   75.0 "ALTA31GT"  13.80 "**"
TG   75.0 "ALTA32GT"  13.80 "**"
TG   75.0 "ALTA41GT"  13.80 "**"
TG   75.0 "ALTA42GT"  13.80 "**"
*
TG   78.0 "MC GEN  "  13.80 "**"
*
```

BUS_VOLT_MAG FOR NORTH OF LUGO 230/115

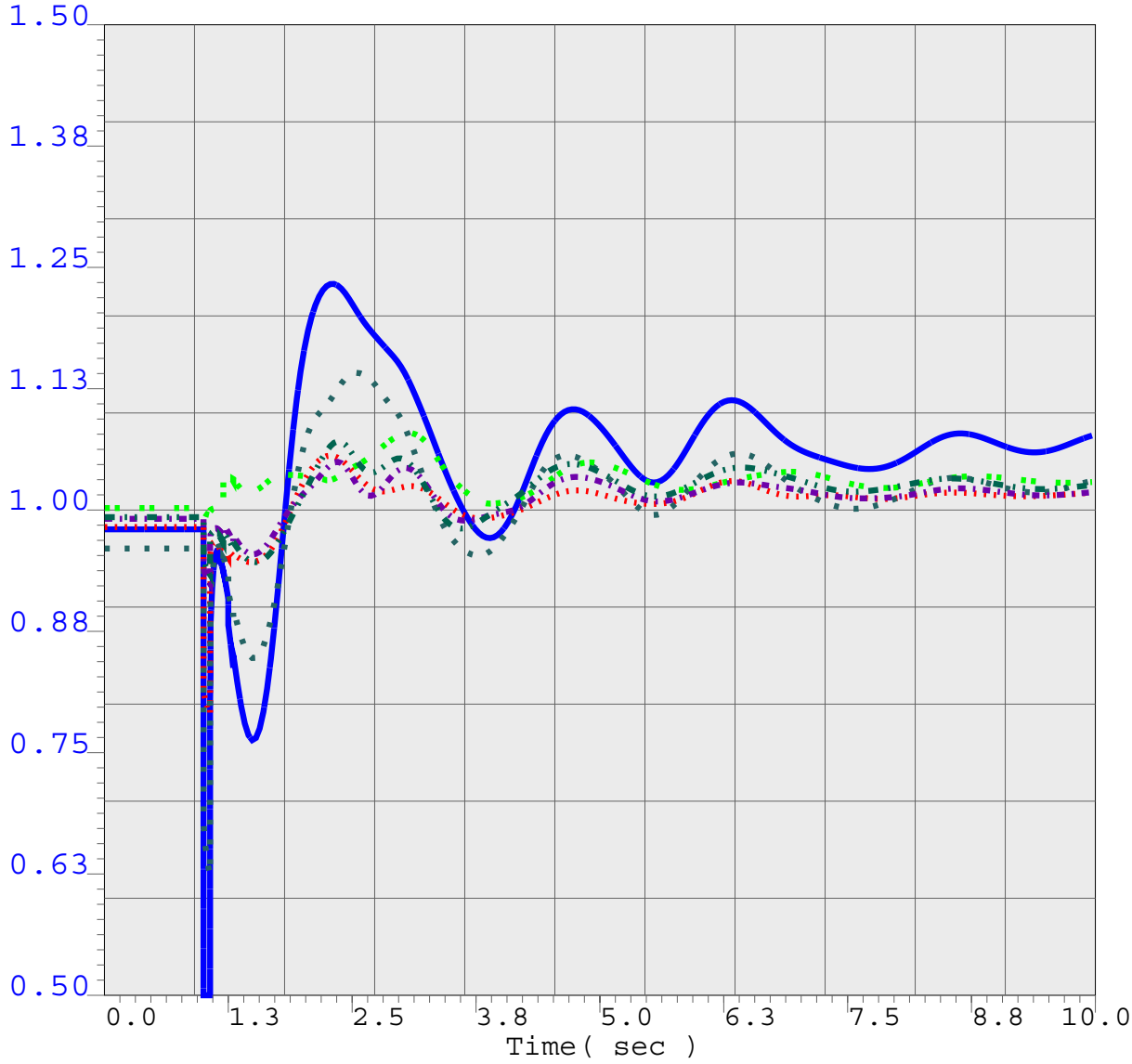

0.5	vbus	24701	KRAMER	230.0	1	1	1.5
0.5	vbus	24601	VICTOR	230.0	1	1	1.5
0.5	vbul	24731	INYOKERN	115.0	1	1	1.5
0.5	vbug	24747	OXBOW G1	13.8	1	1	1.5
0.5	vbus	24723	CONTROL	115.0	1	1	1.5
0.5	vbus	24730	INYO PS	115.0	1	1	1.5

VICTORVILLE 2 PROJECT STUDIES

CASE NAME:sidewindermt\offpeak-postsm.sav

SCE [LOAD 16267 XCHGE -7135 GEN 10745][AA 1340V 2356M 1241D 1005VA]MW

[S.LUGO 3909MW][N.LUGO 1908MW][N.SONGS 1055MW][S.SONGS 1095MW]

[SYLMAR 865][VIC-LUGO 2033][EL-LUGO 1058][MHV-LUGO 648][PV-DV 2908]MW

vv-2-2010sp-post_KRAMER-LUGO-DLO-OXB-MCG.chf

.

Thu Jul 27 14:18:32 2006

BUS_VOLT_MAG FOR NORTH OF LUGO 230/115

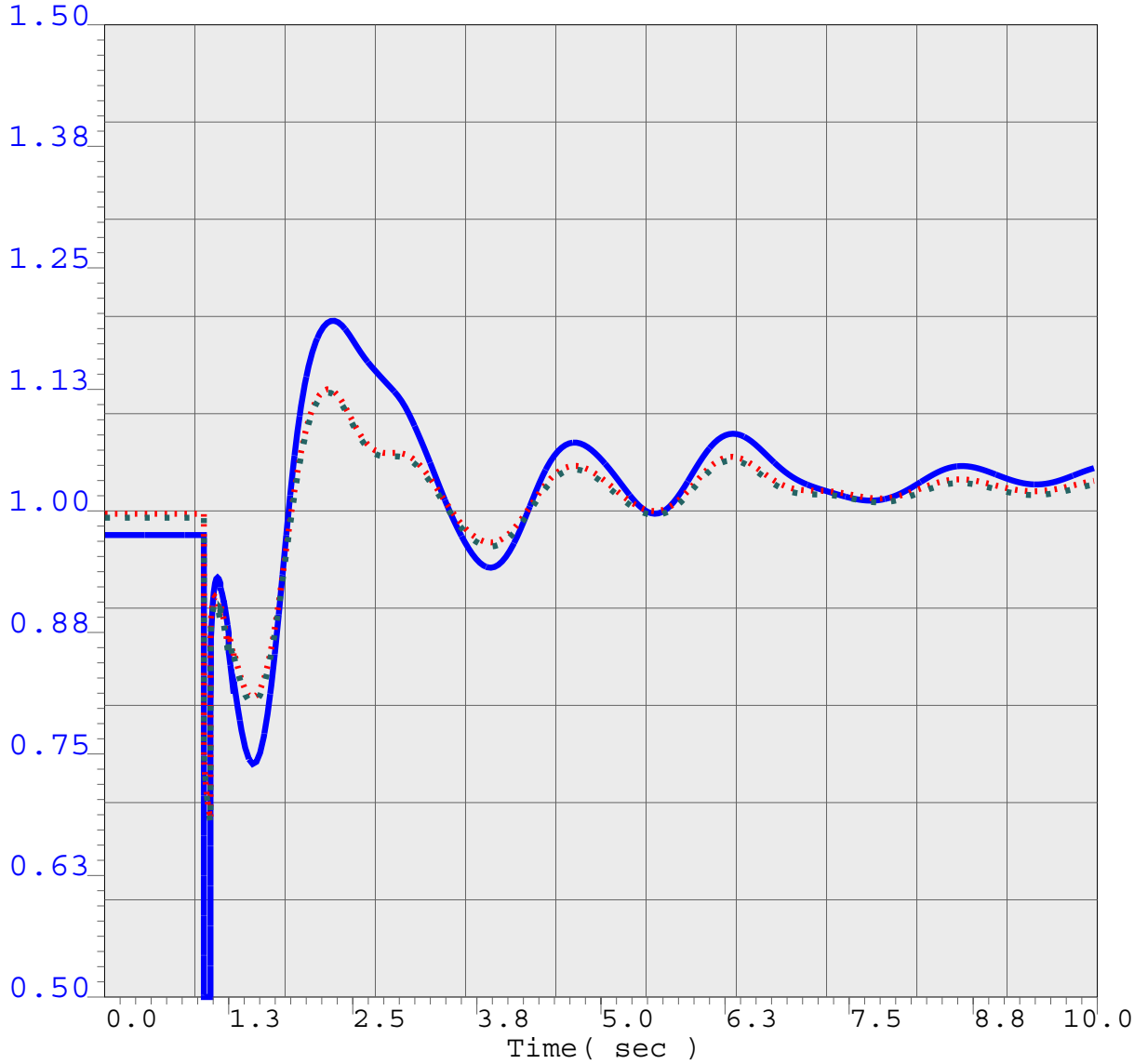

___	0.5	vbul	24702	KRAMER	115.0	1	1	1.5
....	0.5	vbul	24602	VICTOR	115.0	1	1	1.5
_ _	0.5	vbul	24608	SAVAGE	115.0	1	1	1.5
_ .	0.5	vbus	24793		0.0	1		1.5
_ _	0.5	vbug	24791		0.0	1		1.5

VICTORVILLE 2 PROJECT STUDIES

CASE NAME:sidewindermt\offpeak-postsm.sav

SCE [LOAD 16267 XCHGE -7135 GEN 10745][AA 1340V 2356M 1241D 1005VA]MW

[S.LUGO 3909MW][N.LUGO 1908MW][N.SONGS 1055MW][S.SONGS 1095MW]

[SYLMAR 865][VIC-LUGO 2033][EL-LUGO 1058][MHV-LUGO 648][PV-DV 2908]MW

BUS_VOLT_MAG FOR NORTH OF LUGO 230/115

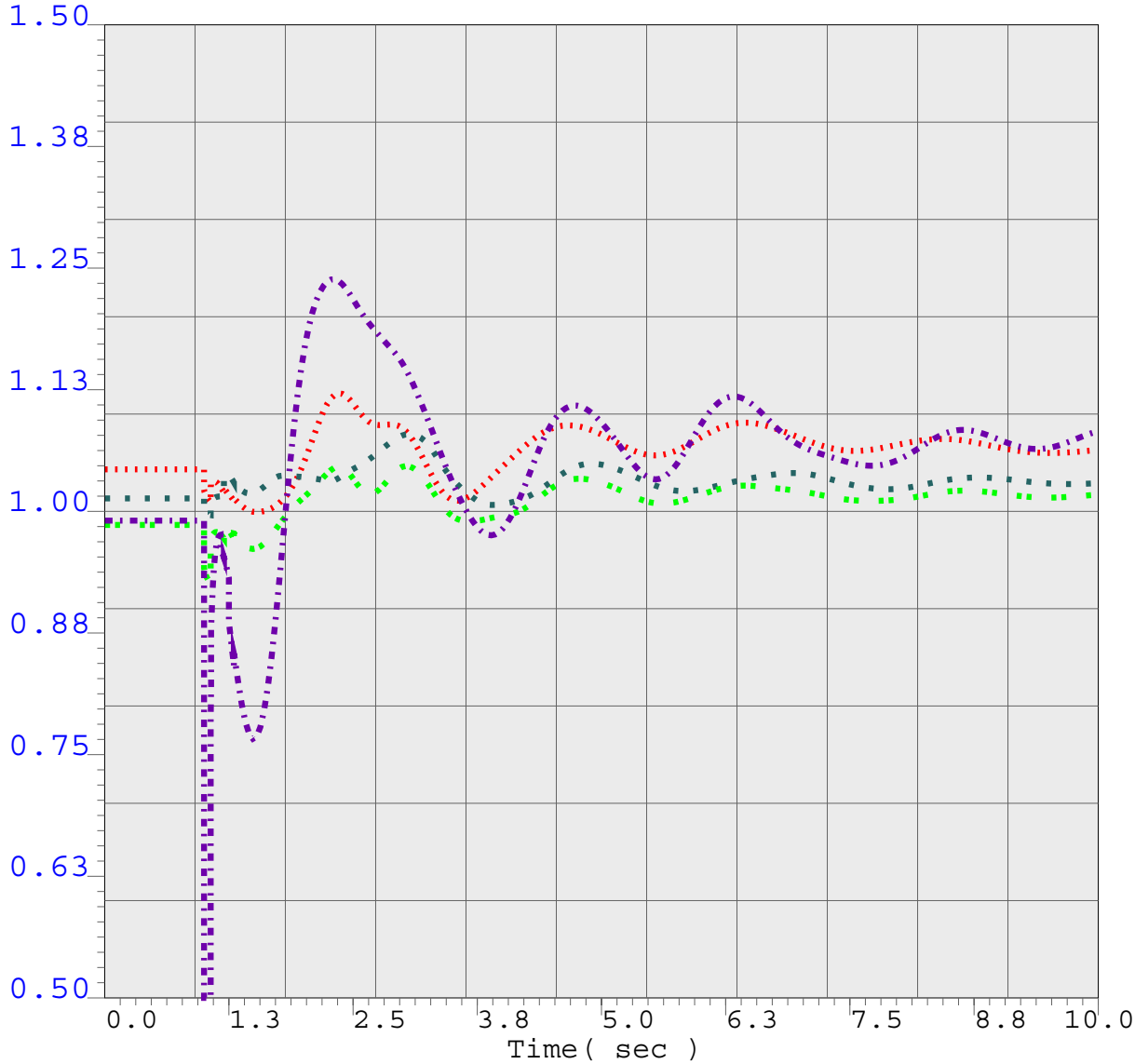

VICTORVILLE 2 PROJECT STUDIES

CASE NAME:sidewindermt\offpeak-postsm.sav

SCE [LOAD 16267 XCHGE -7135 GEN 10745][AA 1340V 2356M 1241D 1005VA]MW

[S.LUGO 3909MW][N.LUGO 1908MW][N.SONGS 1055MW][S.SONGS 1095MW]

[SYLMAR 865][VIC-LUGO 2033][EL-LUGO 1058][MHV-LUGO 648][PV-DV 2908]MW

BUS_FREQUENCY FOR SCE 230/115

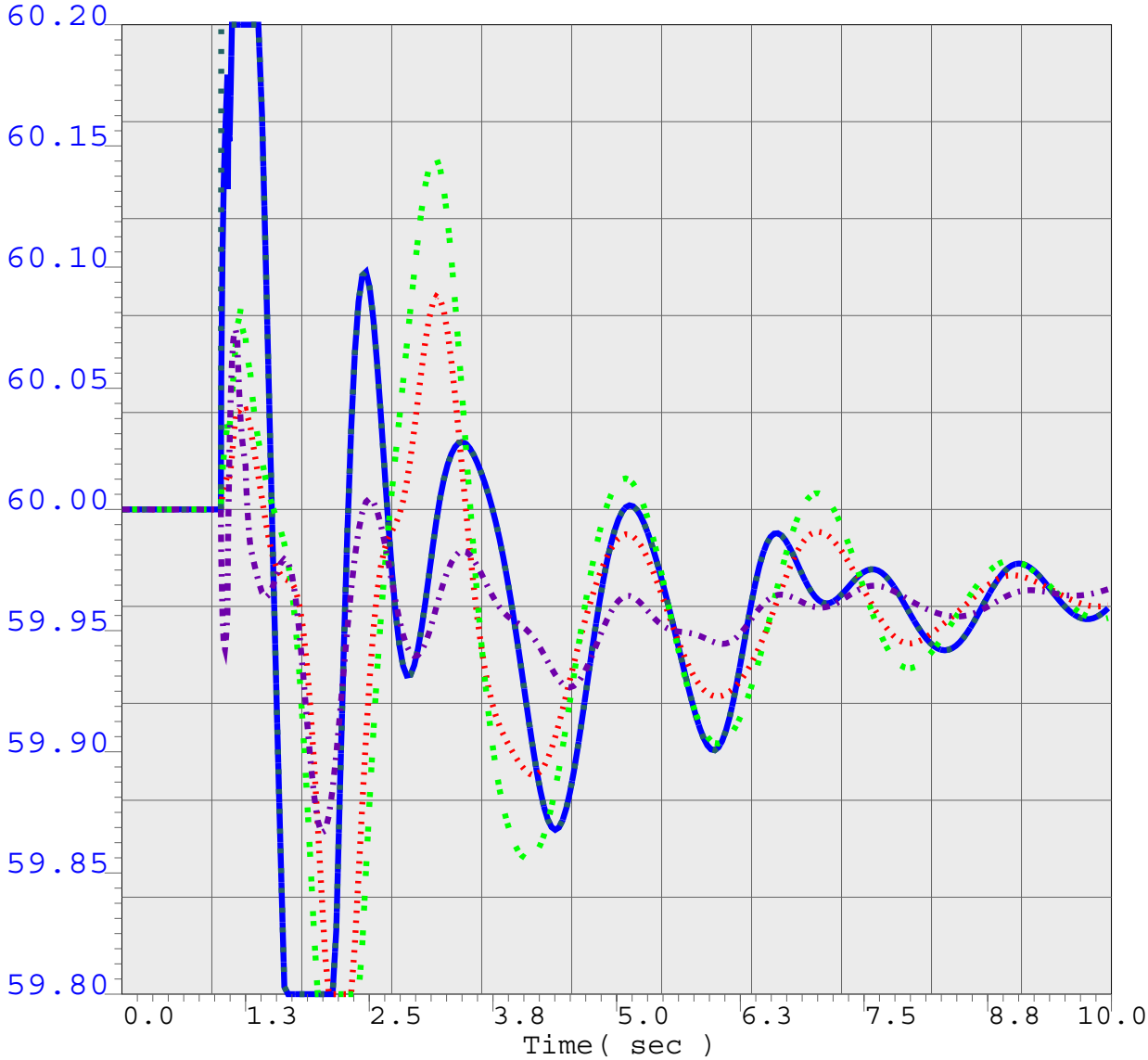

VICTORVILLE 2 PROJECT STUDIES

CASE NAME:sidewindermt\offpeak-postsm.sav

SCE [LOAD 16267 XCHGE -7135 GEN 10745][AA 1340V 2356M 1241D 1005VA]MW

[S.LUGO 3909MW][N.LUGO 1908MW][N.SONGS 1055MW][S.SONGS 1095MW]

[SYLMAR 865][VIC-LUGO 2033][EL-LUGO 1058][MHV-LUGO 648][PV-DV 2908]MW

MACHINE ANGLE

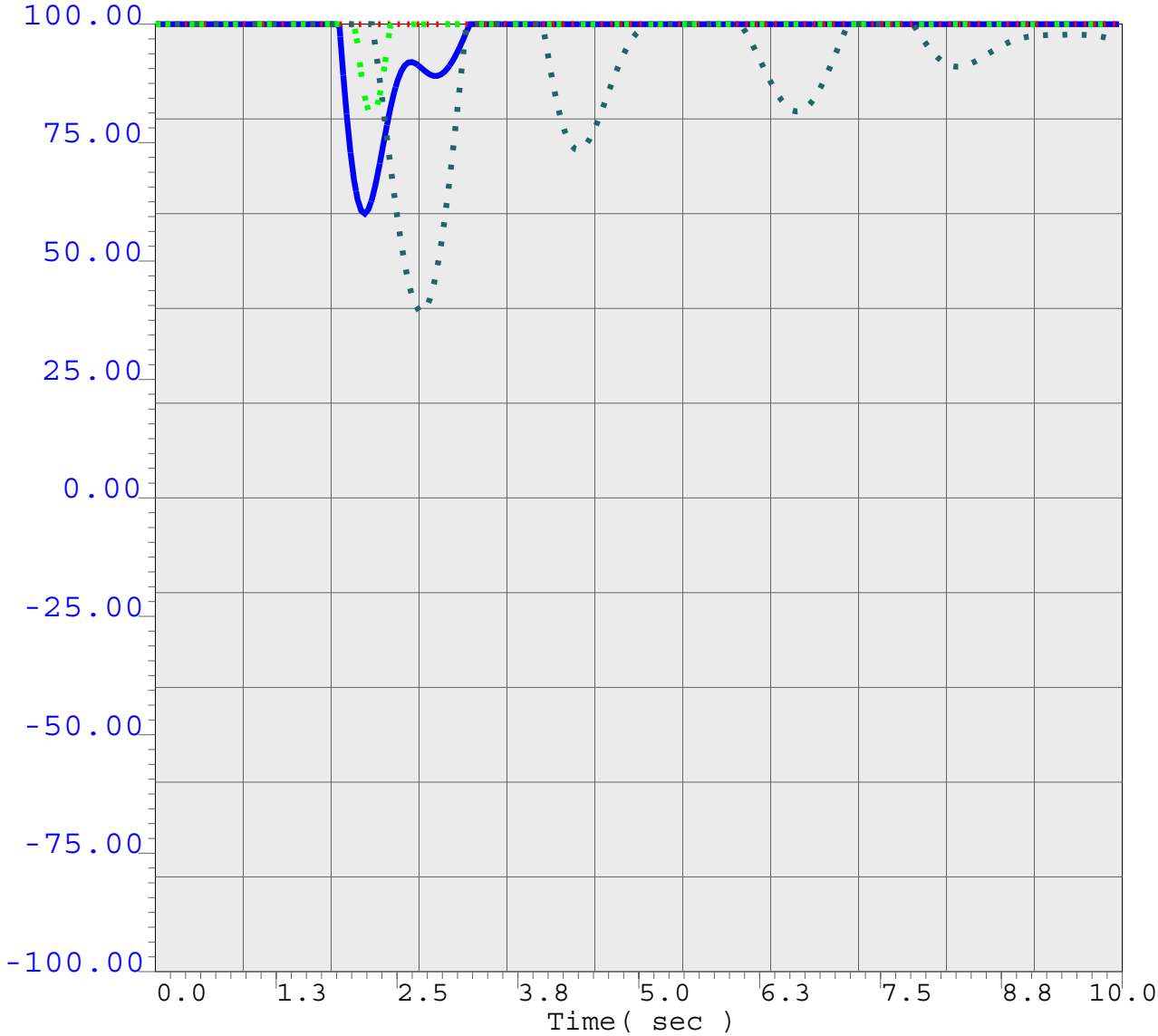

___	-100.0	ang	24714	ALTA 1G	13.8	1	1	100.0
....	-100.0	ang	24747	OXBOW G1	13.8	1	1	100.0
_ _	-100.0	ang	24709	BSPHYD26	2.2	1	1	100.0
_ .	-100.0	ang	24711	CALGEN1G	13.8	1	1	100.0
_._	-100.0	ang	24354		0.0	1		100.0

VICTORVILLE 2 PROJECT STUDIES

CASE NAME:sidewindermt\offpeak-postsm.sav

SCE [LOAD 16267 XCHGE -7135 GEN 10745][AA 1340V 2356M 1241D 1005VA]MW

[S.LUGO 3909MW][N.LUGO 1908MW][N.SONGS 1055MW][S.SONGS 1095MW]

[SYLMAR 865][VIC-LUGO 2033][EL-LUGO 1058][MHV-LUGO 648][PV-DV 2908]MW

```
RUN
*   3 phase 4 cycle fault at KRAMER
*   Loss of KRAMER   230.00 - LUGO   230.00 1 & 2
*
*  CC cards for post-transient only
*
*   Fault bus at KRAMER
FB   60.0 "KRAMER  " 230.
* slg: FB   0.0 "KRAMER  " 230. .00072  .0076
*
*   Clear fault at KRAMER
CFB  64.0 "KRAMER  " 230.
*
*   Trip KRAMER   230.00 - LUGO   230.00 1 & 2
*
DL   64.0 "KRAMER  " 230. "LUGO    " 230. "1 "
DL   64.0 "KRAMER  " 230. "LUGO    " 230. "2 "
*
*  Trip COOLWATER, LSP and BLM STs in 10 cycles after fault
*
TG   70.0 "ALTA 3ST"  13.80 "**"
TG   70.0 "ALTA 4ST"  13.80 "**"
*
DL   70.0 "LUZ LSP " 230. "KRAMER  " 230. "1 "
TG   70.0 "LUZ8  G "  13.80 "**"
TG   70.0 "LUZ9  G "  13.80 "**"
*
DL   70.0 "BLM WEST" 230. "KRAMER  " 230. "1 "
TG   70.0 "NAVYII4G"  13.80 "**"
TG   70.0 "NAVYII5G"  13.80 "**"
TG   70.0 "NAVYII6G"  13.80 "**"
TG   70.0 "BLM  E7G"  13.80 "**"
TG   70.0 "BLM  E8G"  13.80 "**"
TG   70.0 "BLM  W9G"  13.80 "**"
*
*  Trip VV2 Project
TG   72.0 "VV 2 ST1"  18.00 "**"
TG   72.0 "VV 2 CT1"  18.00 "**"
TG   72.0 "VV_2_CT2"  18.00 "**"
*
*  Trip CASA DIABLO etc. in 12 cycles after fault
*
TG   72.0 "OXBOW G1"  13.80 "**"
*
*  Trip COOLWATER CTs in 16 cycles after fault
*
TG   76.0 "ALTA 3GT"  13.80 "**"
TG   76.0 "ALTA 4GT"  13.80 "**"
*
```

BUS_VOLT_MAG FOR NORTH OF LUGO 230/115

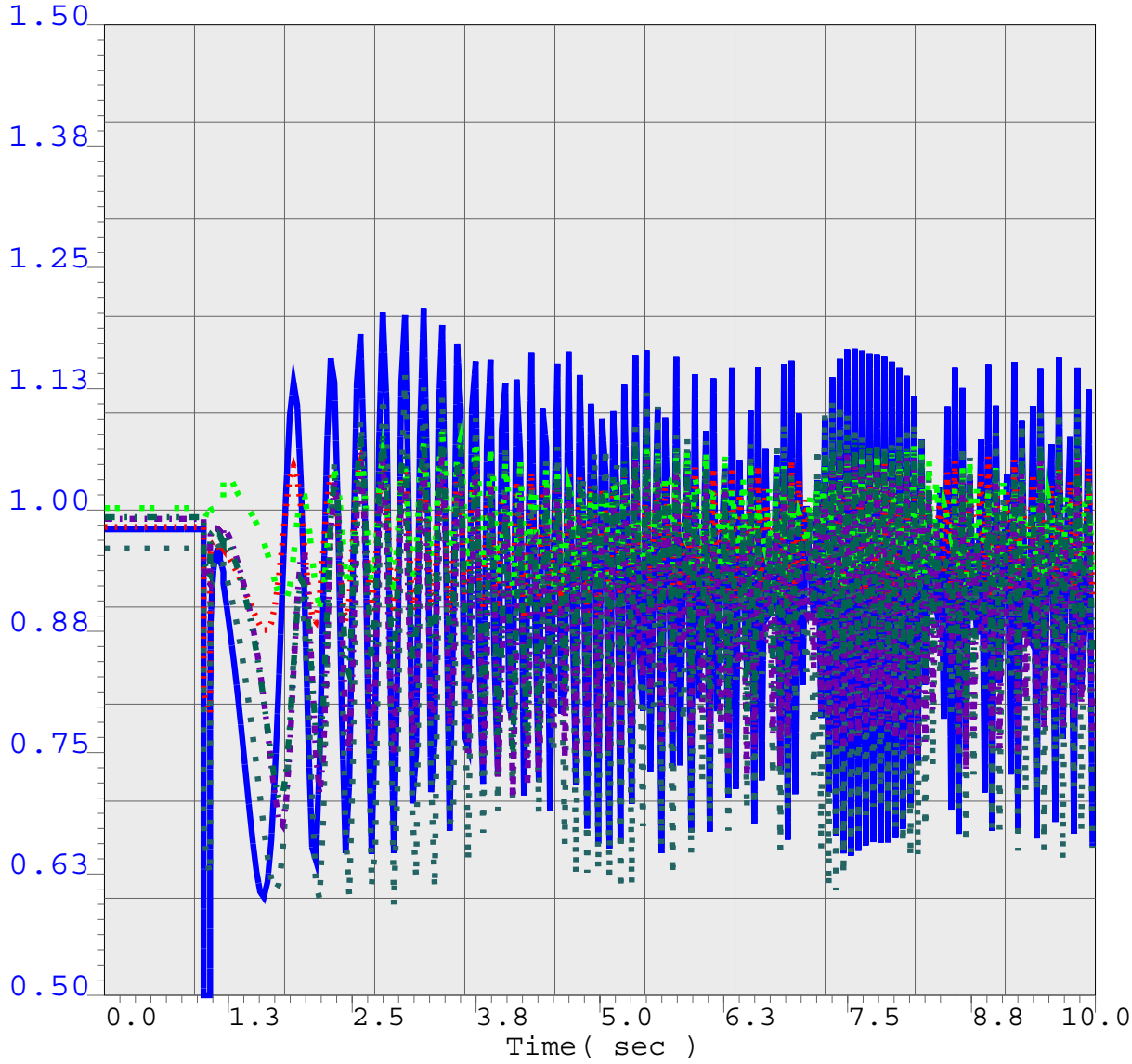

0.5	vbus	24701	KRAMER	230.0	1	1	1.5
0.5	vbus	24601	VICTOR	230.0	1	1	1.5
0.5	vbul	24731	INYOKERN	115.0	1	1	1.5
0.5	vbug	24747	OXBOW G1	13.8	1	1	1.5
0.5	vbus	24723	CONTROL	115.0	1	1	1.5
0.5	vbus	24730	INYO PS	115.0	1	1	1.5

VICTORVILLE 2 PROJECT STUDIES

CASE NAME:sidewindermt\offpeak-postsm.sav

SCE [LOAD 16267 XCHGE -7135 GEN 10745][AA 1340V 2356M 1241D 1005VA]MW

[S.LUGO 3909MW][N.LUGO 1908MW][N.SONGS 1055MW][S.SONGS 1095MW]

[SYLMAR 865][VIC-LUGO 2033][EL-LUGO 1058][MHV-LUGO 648][PV-DV 2908]MW

vv-2-2010sp-post_KRAMER-LUGO-DLO-OXBOW-VV2.chf

Thu Jul 27 13:13:19 2006

BUS_VOLT_MAG FOR NORTH OF LUGO 230/115

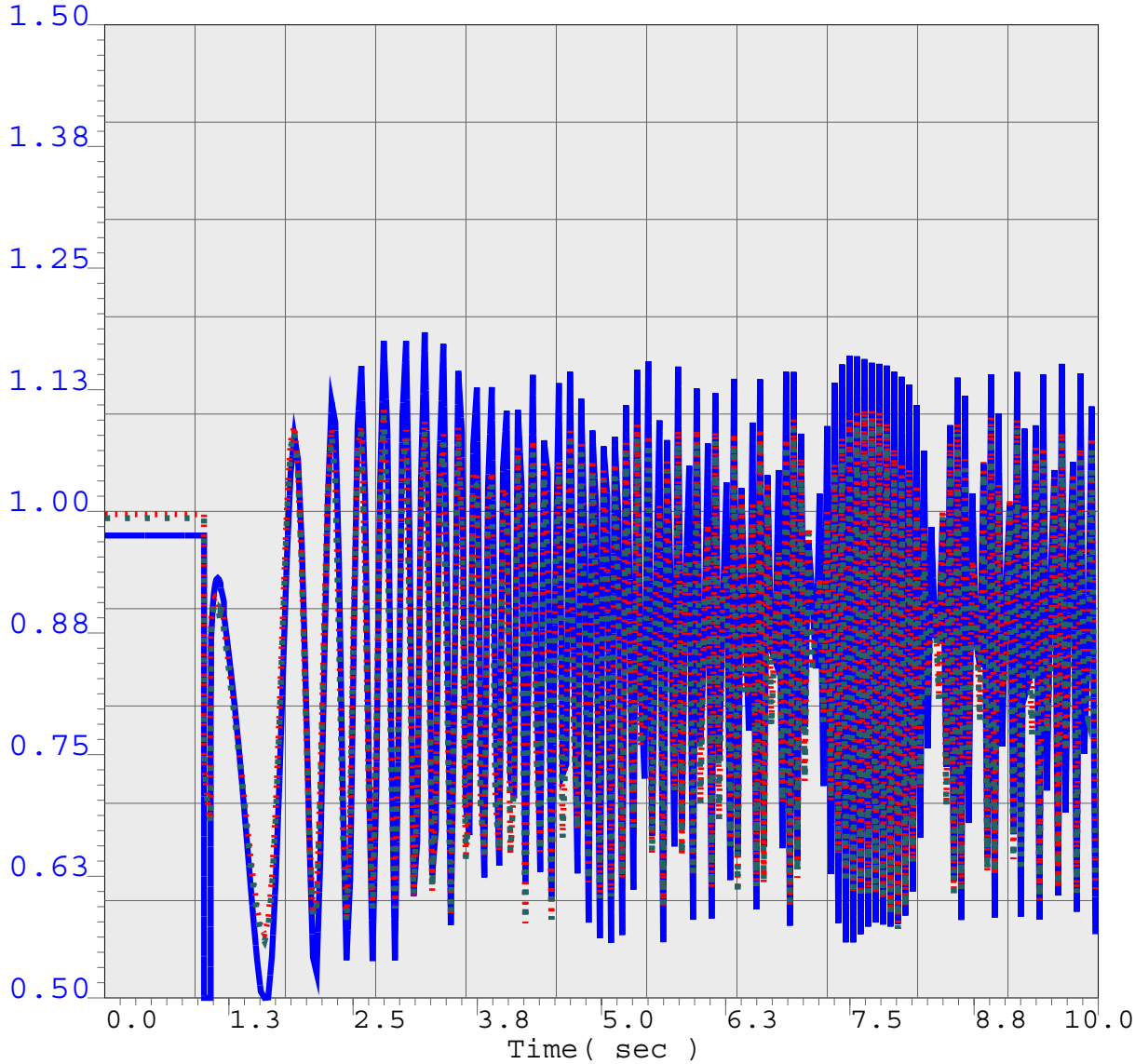

___	0.5	vbul	24702	KRAMER	115.0	1	1	1.5
....	0.5	vbul	24602	VICTOR	115.0	1	1	1.5
_ _	0.5	vbul	24608	SAVAGE	115.0	1	1	1.5
_ .	0.5	vbus	24793		0.0	1		1.5
_ _	0.5	vbug	24791		0.0	1		1.5

VICTORVILLE 2 PROJECT STUDIES

CASE NAME:sidewindermt\offpeak-postsm.sav

SCE [LOAD 16267 XCHGE -7135 GEN 10745][AA 1340V 2356M 1241D 1005VA]MW

[S.LUGO 3909MW][N.LUGO 1908MW][N.SONGS 1055MW][S.SONGS 1095MW]

[SYLMAR 865][VIC-LUGO 2033][EL-LUGO 1058][MHV-LUGO 648][PV-DV 2908]MW

vv-2-2010sp-post_KRAMER-LUGO-DLO-OXBOW-VV2.chf

.

Thu Jul 27 13:13:20 2006

BUS_VOLT_MAG FOR NORTH OF LUGO 230/115

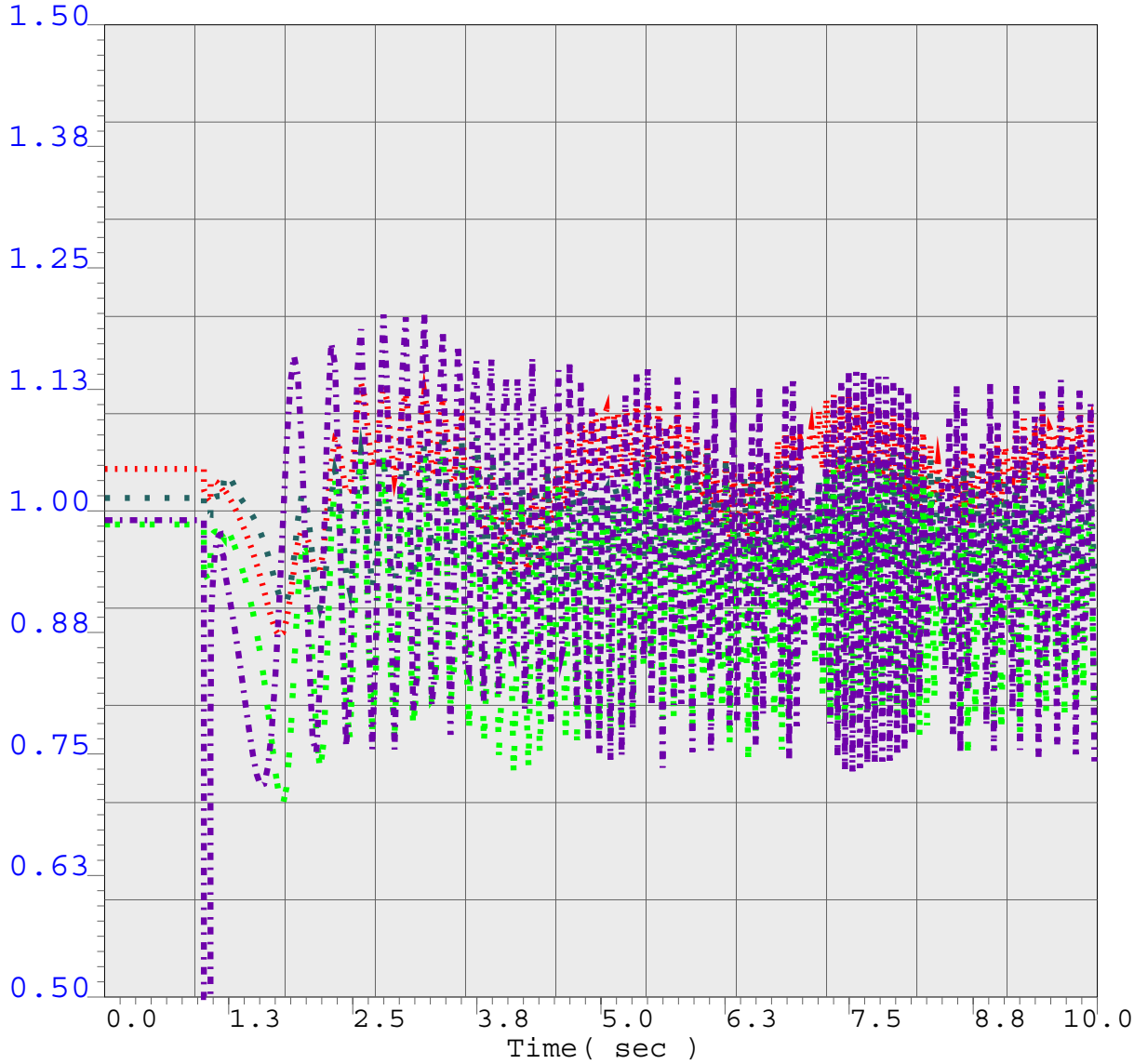

VICTORVILLE 2 PROJECT STUDIES

CASE NAME:sidewindermt\offpeak-postsm.sav

SCE [LOAD 16267 XCHGE -7135 GEN 10745][AA 1340V 2356M 1241D 1005VA]MW

[S.LUGO 3909MW][N.LUGO 1908MW][N.SONGS 1055MW][S.SONGS 1095MW]

[SYLMAR 865][VIC-LUGO 2033][EL-LUGO 1058][MHV-LUGO 648][PV-DV 2908]MW

BUS_FREQUENCY FOR SCE 230/115

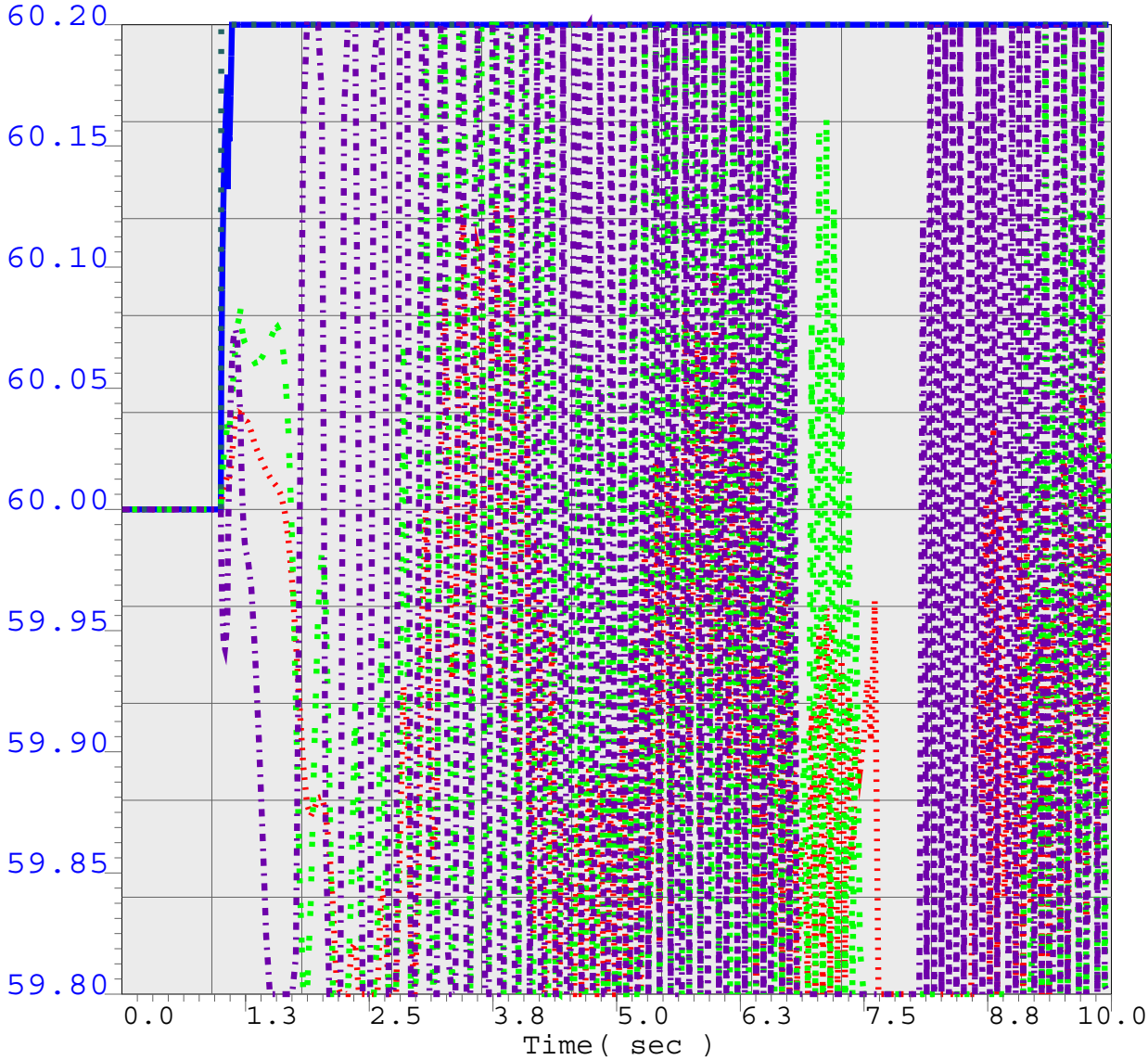

VICTORVILLE 2 PROJECT STUDIES

CASE NAME:sidewindermt\offpeak-postsm.sav

SCE [LOAD 16267 XCHGE -7135 GEN 10745][AA 1340V 2356M 1241D 1005VA]MW

[S.LUGO 3909MW][N.LUGO 1908MW][N.SONGS 1055MW][S.SONGS 1095MW]

[SYLMAR 865][VIC-LUGO 2033][EL-LUGO 1058][MHV-LUGO 648][PV-DV 2908]MW

MACHINE ANGLE

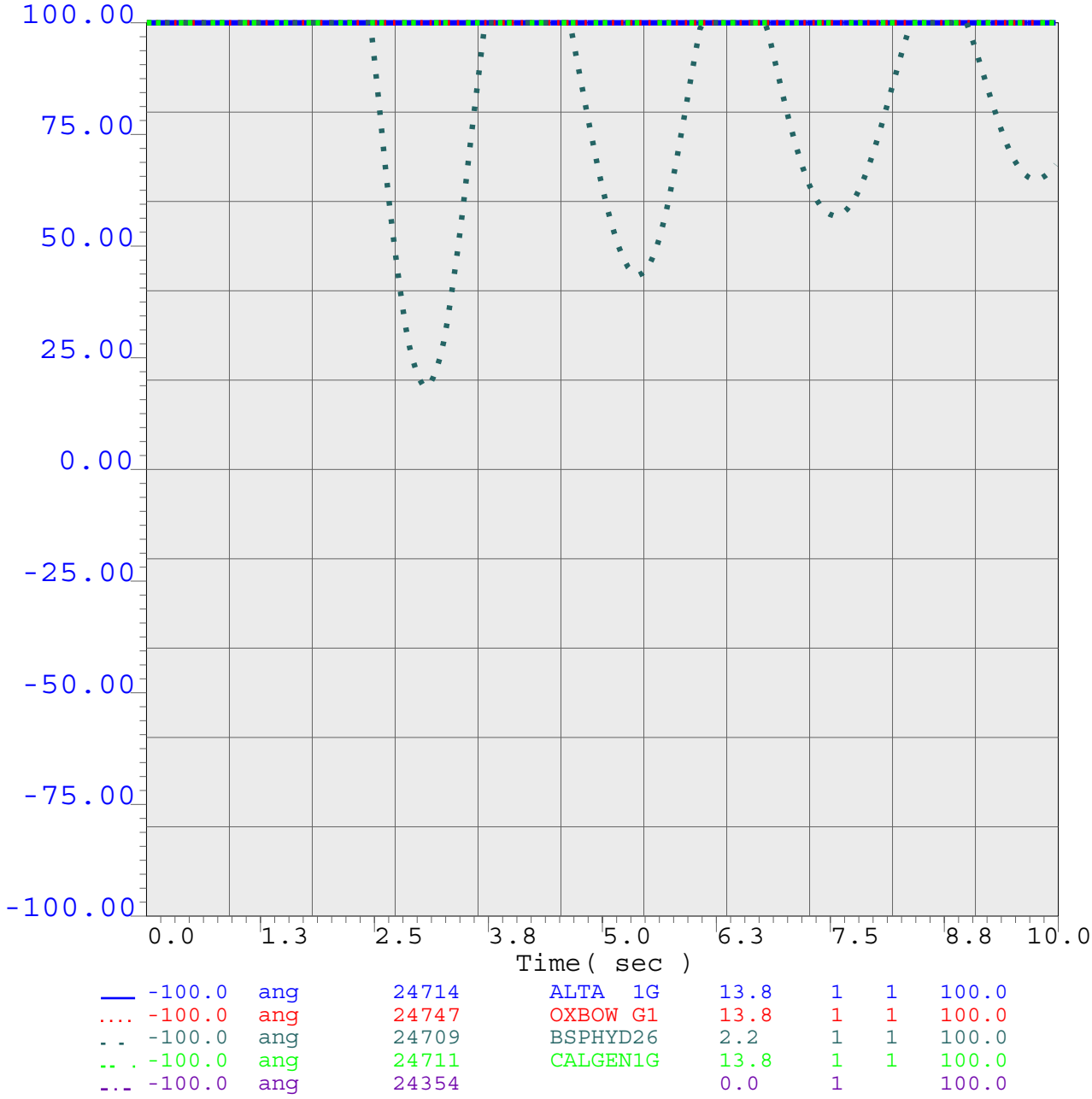

VICTORVILLE 2 PROJECT STUDIES

CASE NAME:sidewindermt\offpeak-postsm.sav

SCE [LOAD 16267 XCHGE -7135 GEN 10745][AA 1340V 2356M 1241D 1005VA]MW

[S.LUGO 3909MW][N.LUGO 1908MW][N.SONGS 1055MW][S.SONGS 1095MW]

[SYLMAR 865][VIC-LUGO 2033][EL-LUGO 1058][MHV-LUGO 648][PV-DV 2908]MW

```
RUN
*   3 phase 5 cycle fault at KRAMER
*   Loss Two Kramer - Victor 115 kV lines
*
*  CC cards for transient only
*
*   Fault bus at KRAMER
FB   60.0 "KRAMER    " 115.
* slg: FB   0.0 "KRAMER    "
*
*   Clear fault at KRAMER
CFB  65.0 "KRAMER    " 115.
*
*   Trip KRAMER - VICTOR 115 kV LINES
*
DL   65.0 "KRAMER    " 115. "VICTOR    " 115. "1 "
DL   65.0 "KRAMER    " 115. "TAP601    " 115. "1 "
DL   65.0 "VICTOR    " 115. "TAP601    " 115. "1 "
DL   65.0 "ROADWAY   " 115. "TAP601    " 115. "1 "
*
```

BUS_VOLT_MAG FOR NORTH OF LUGO 230/115

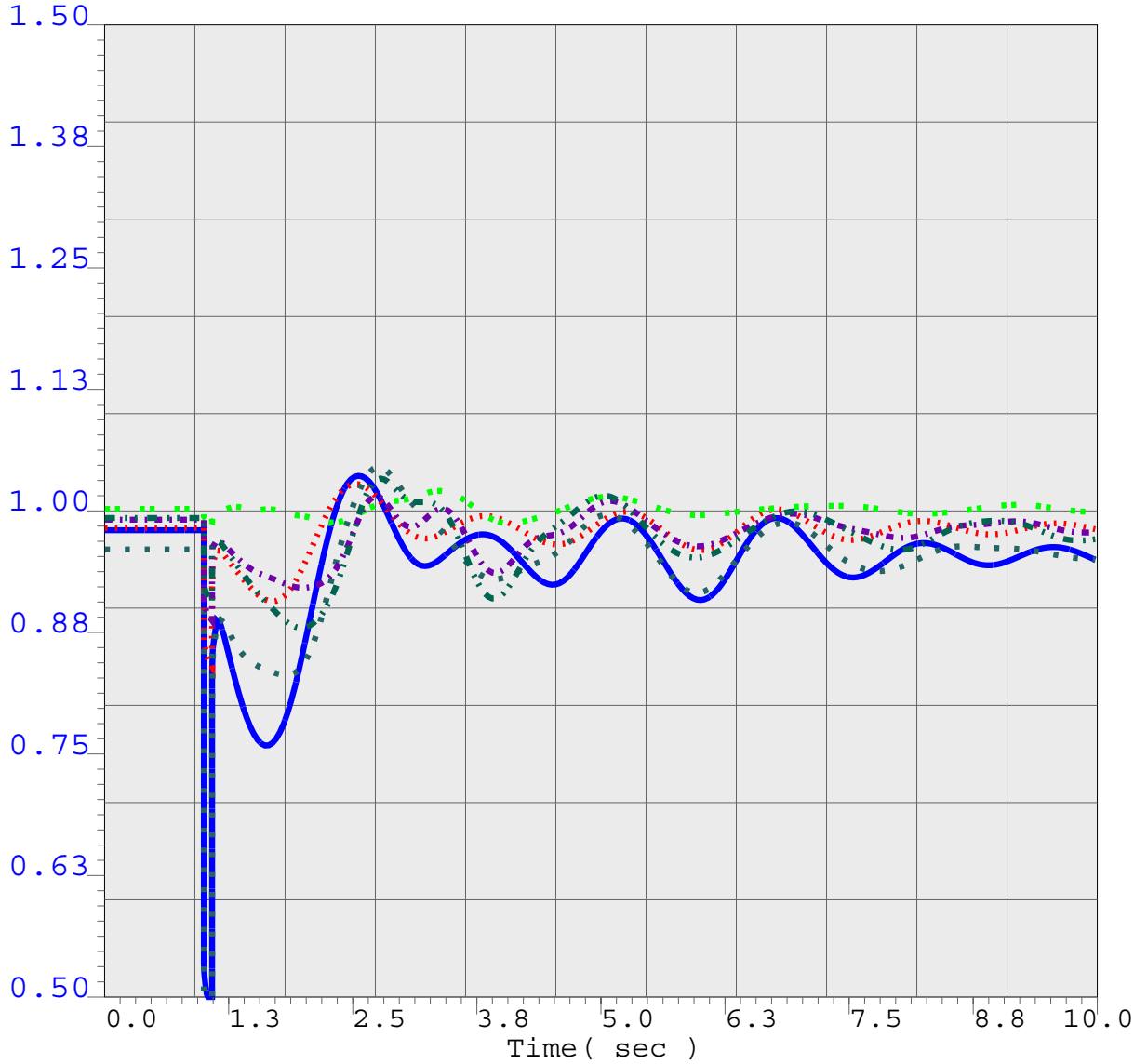

VICTORVILLE 2 PROJECT STUDIES

CASE NAME:sidewindermt\offpeak-postsm.sav

SCE [LOAD 16267 XCHGE -7135 GEN 10745][AA 1340V 2356M 1241D 1005VA]MW

[S.LUGO 3909MW][N.LUGO 1908MW][N.SONGS 1055MW][S.SONGS 1095MW]

[SYLMAR 865][VIC-LUGO 2033][EL-LUGO 1058][MHV-LUGO 648][PV-DV 2908]MW

BUS_VOLT_MAG FOR NORTH OF LUGO 230/115

VICTORVILLE 2 PROJECT STUDIES

CASE NAME:sidewindermt\offpeak-postsm.sav

SCE [LOAD 16267 XCHGE -7135 GEN 10745][AA 1340V 2356M 1241D 1005VA]MW

[S.LUGO 3909MW][N.LUGO 1908MW][N.SONGS 1055MW][S.SONGS 1095MW]

[SYLMAR 865][VIC-LUGO 2033][EL-LUGO 1058][MHV-LUGO 648][PV-DV 2908]MW

BUS_VOLT_MAG FOR NORTH OF LUGO 230/115

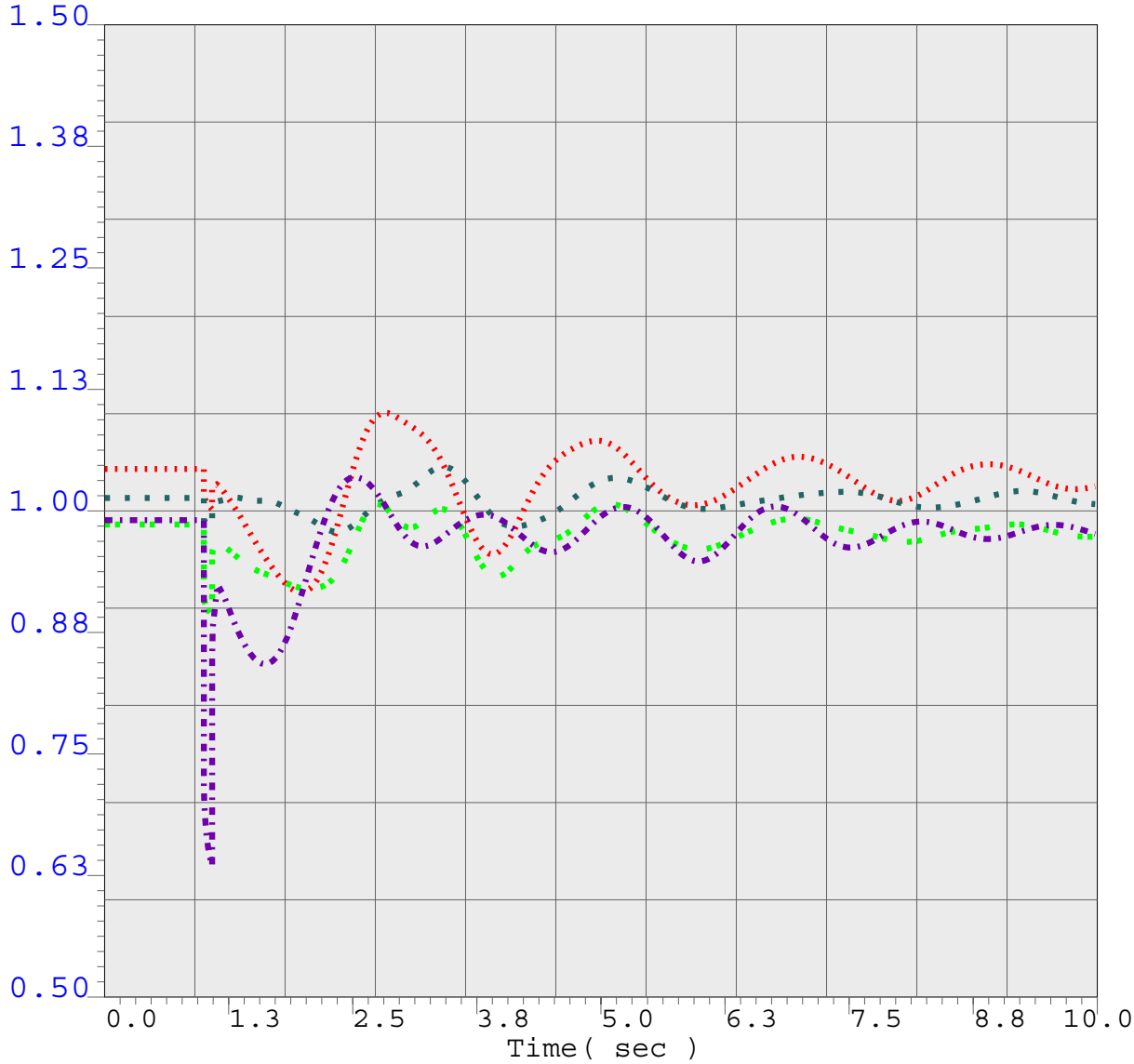

VICTORVILLE 2 PROJECT STUDIES

CASE NAME:sidewindermt\offpeak-postsm.sav

SCE [LOAD 16267 XCHGE -7135 GEN 10745][AA 1340V 2356M 1241D 1005VA]MW

[S.LUGO 3909MW][N.LUGO 1908MW][N.SONGS 1055MW][S.SONGS 1095MW]

[SYLMAR 865][VIC-LUGO 2033][EL-LUGO 1058][MHV-LUGO 648][PV-DV 2908]MW

BUS_FREQUENCY FOR SCE 230/115

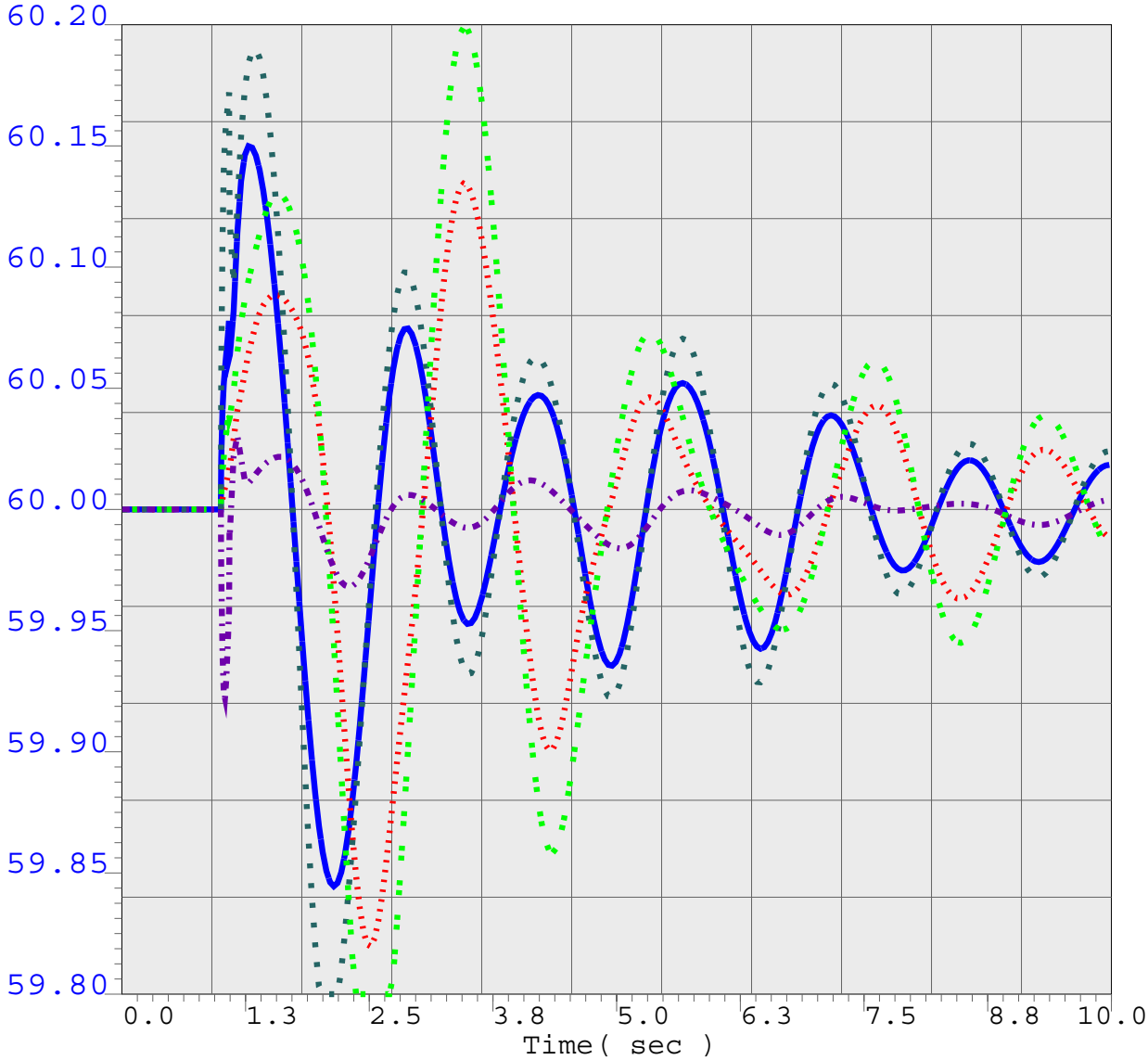

VICTORVILLE 2 PROJECT STUDIES

CASE NAME:sidewindermt\offpeak-postsm.sav

SCE [LOAD 16267 XCHGE -7135 GEN 10745][AA 1340V 2356M 1241D 1005VA]MW

[S.LUGO 3909MW][N.LUGO 1908MW][N.SONGS 1055MW][S.SONGS 1095MW]

[SYLMAR 865][VIC-LUGO 2033][EL-LUGO 1058][MHV-LUGO 648][PV-DV 2908]MW

MACHINE ANGLE

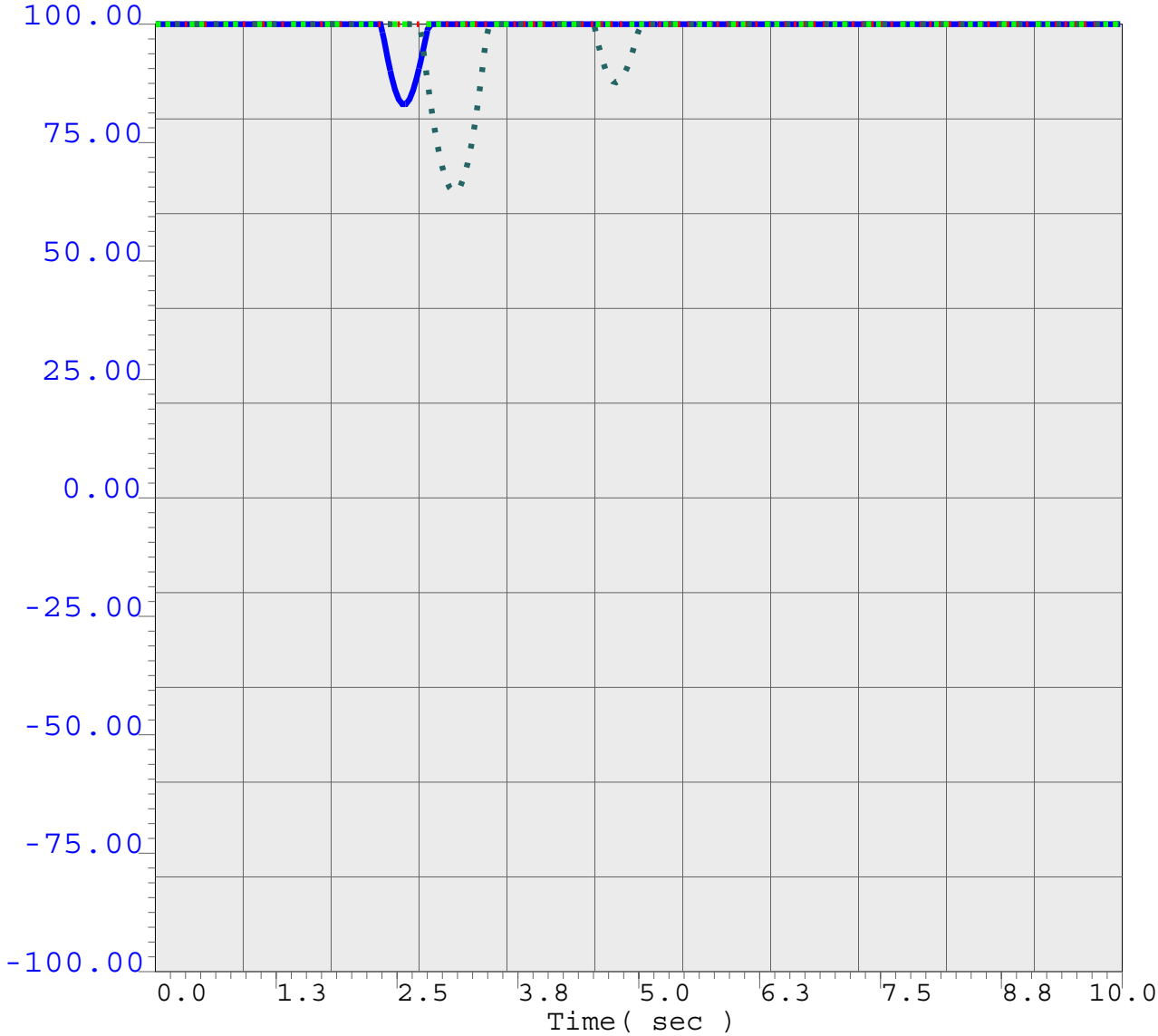

___	-100.0	ang	24714	ALTA 1G	13.8	1	1	100.0
....	-100.0	ang	24747	OXBOW G1	13.8	1	1	100.0
_ _	-100.0	ang	24709	BSPHYD26	2.2	1	1	100.0
_ .	-100.0	ang	24711	CALGEN1G	13.8	1	1	100.0
_._	-100.0	ang	24354		0.0	1		100.0

VICTORVILLE 2 PROJECT STUDIES

CASE NAME:sidewindermt\offpeak-postsm.sav

SCE [LOAD 16267 XCHGE -7135 GEN 10745][AA 1340V 2356M 1241D 1005VA]MW

[S.LUGO 3909MW][N.LUGO 1908MW][N.SONGS 1055MW][S.SONGS 1095MW]

[SYLMAR 865][VIC-LUGO 2033][EL-LUGO 1058][MHV-LUGO 648][PV-DV 2908]MW

```
RUN
*   3 phase 4 cycle fault at VICTOR
*   Loss of VICTOR   230.00 - LUGO     230.00 1 & 2
*
*  CC cards for post-transient only
*
*   Fault bus at VICTOR
FB   60.0 "VICTOR  " 230.
* slg: FB   0.0 "VICTOR  " 230. .00072  .0076
*
*   Clear fault at VICTOR
CFB  64.0 "VICTOR  " 230.
*
*   Trip VICTOR   230.00 - LUGO     230.00 1 & 2
*
DL   64.0 "VICTOR  " 230. "LUGO    " 230. "1 "
DL   64.0 "VICTOR  " 230. "LUGO    " 230. "2 "
*
*  Trip HDPP in 12 cycles after fault
*
TG   72.0 "HIDESST1"  20.00 "**"
TG   72.0 "HIDESCT1"  15.00 "**"
TG   72.0 "HIDESCT2"  15.00 "**"
TG   72.0 "HIDESCT3"  15.00 "**"
*
```

BUS_VOLT_MAG FOR NORTH OF LUGO 230/115

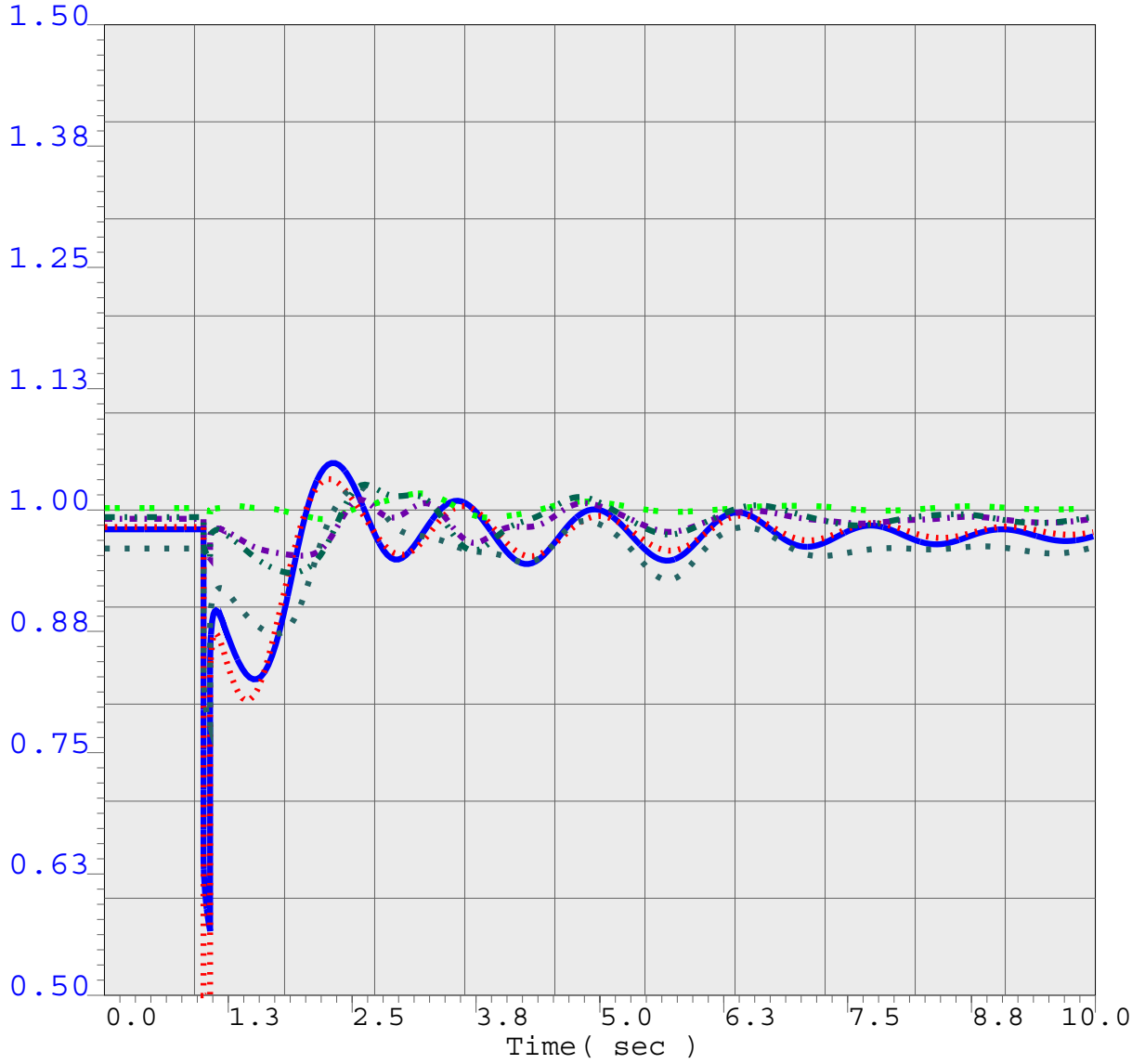

0.5	vbus	24701	KRAMER	230.0	1	1	1.5
0.5	vbus	24601	VICTOR	230.0	1	1	1.5
0.5	vbul	24731	INYOKERN	115.0	1	1	1.5
0.5	vbug	24747	OXBOW G1	13.8	1	1	1.5
0.5	vbus	24723	CONTROL	115.0	1	1	1.5
0.5	vbus	24730	INYO PS	115.0	1	1	1.5

VICTORVILLE 2 PROJECT STUDIES

CASE NAME:sidewindermt\offpeak-postsm.sav

SCE [LOAD 16267 XCHGE -7135 GEN 10745][AA 1340V 2356M 1241D 1005VA]MW

[S.LUGO 3909MW][N.LUGO 1908MW][N.SONGS 1055MW][S.SONGS 1095MW]

[SYLMAR 865][VIC-LUGO 2033][EL-LUGO 1058][MHV-LUGO 648][PV-DV 2908]MW

BUS_VOLT_MAG FOR NORTH OF LUGO 230/115

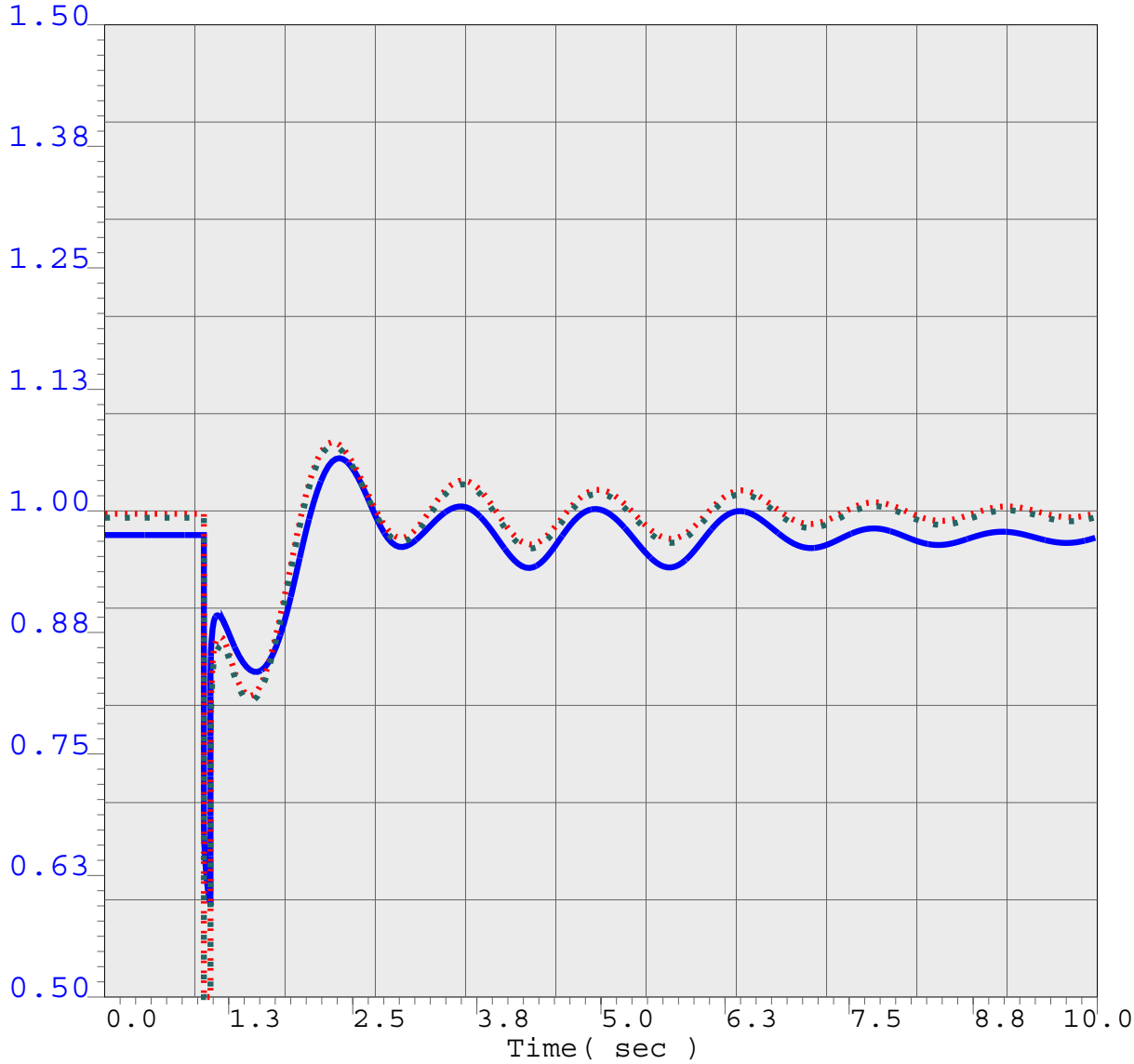

___	0.5	vbul	24702	KRAMER	115.0	1	1	1.5
....	0.5	vbul	24602	VICTOR	115.0	1	1	1.5
_ _	0.5	vbul	24608	SAVAGE	115.0	1	1	1.5
_ .	0.5	vbus	24793		0.0	1		1.5
_ _	0.5	vbug	24791		0.0	1		1.5

VICTORVILLE 2 PROJECT STUDIES

CASE NAME:sidewindermt\offpeak-postsm.sav

SCE [LOAD 16267 XCHGE -7135 GEN 10745][AA 1340V 2356M 1241D 1005VA]MW

[S.LUGO 3909MW][N.LUGO 1908MW][N.SONGS 1055MW][S.SONGS 1095MW]

[SYLMAR 865][VIC-LUGO 2033][EL-LUGO 1058][MHV-LUGO 648][PV-DV 2908]MW

BUS_VOLT_MAG FOR NORTH OF LUGO 230/115

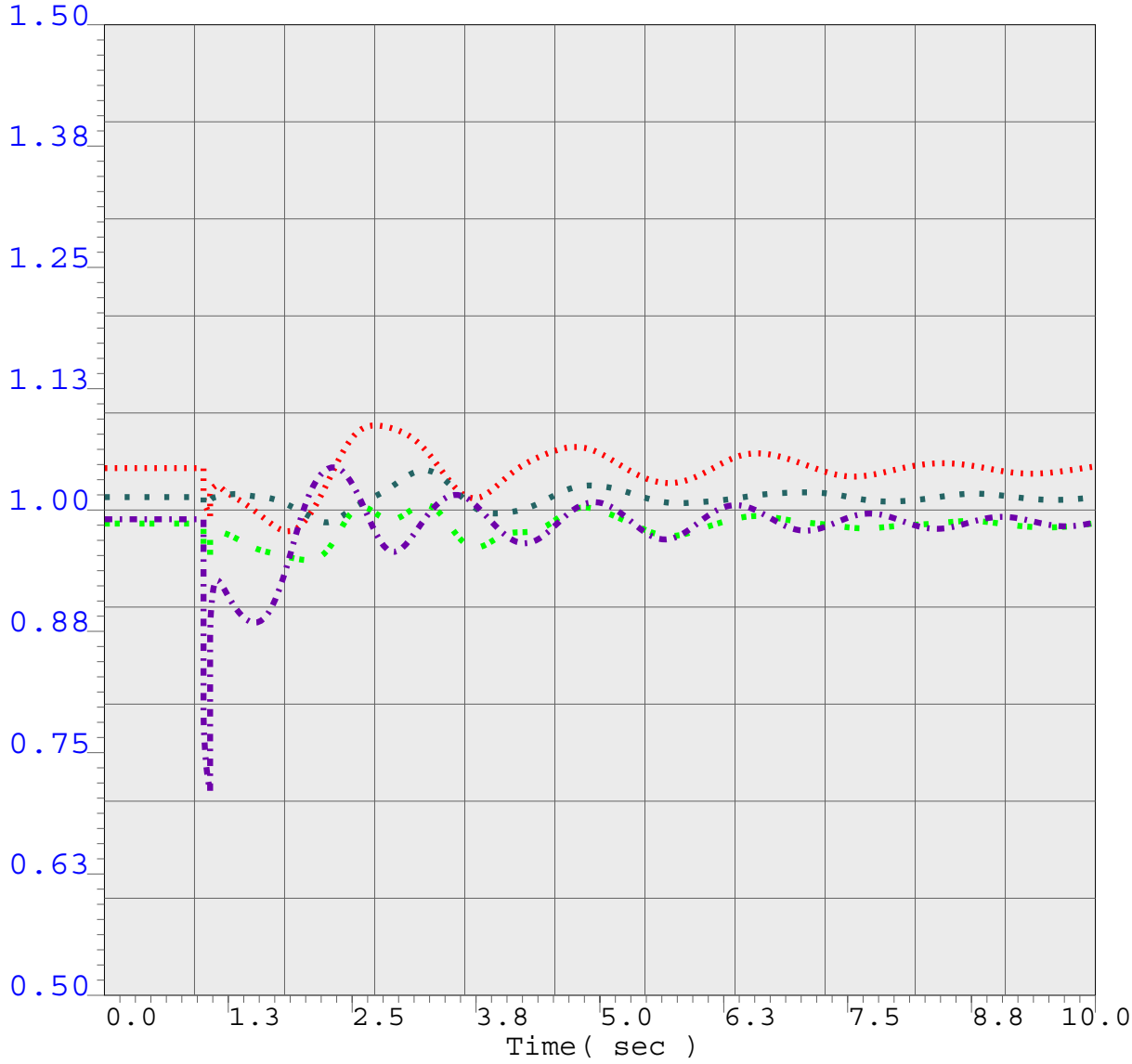

___	0.5	vbus	24787		0.0	1		1.5
....	0.5	vbus	24729	INYO	230.0	1	1	1.5
_ _	0.5	vbus	24748	OXBOW A	230.0	1	1	1.5
_ .	0.5	vbus	24760	OXBOW B	230.0	1	1	1.5
_ _	0.5	vbus	24717	COLWATER	230.0	1	1	1.5
_ ..	0.5	vbus	24793		0.0	1		1.5

VICTORVILLE 2 PROJECT STUDIES

CASE NAME:sidewindermt\offpeak-postsm.sav

SCE [LOAD 16267 XCHGE -7135 GEN 10745][AA 1340V 2356M 1241D 1005VA]MW

[S.LUGO 3909MW][N.LUGO 1908MW][N.SONGS 1055MW][S.SONGS 1095MW]

[SYLMAR 865][VIC-LUGO 2033][EL-LUGO 1058][MHV-LUGO 648][PV-DV 2908]MW

MACHINE ANGLE

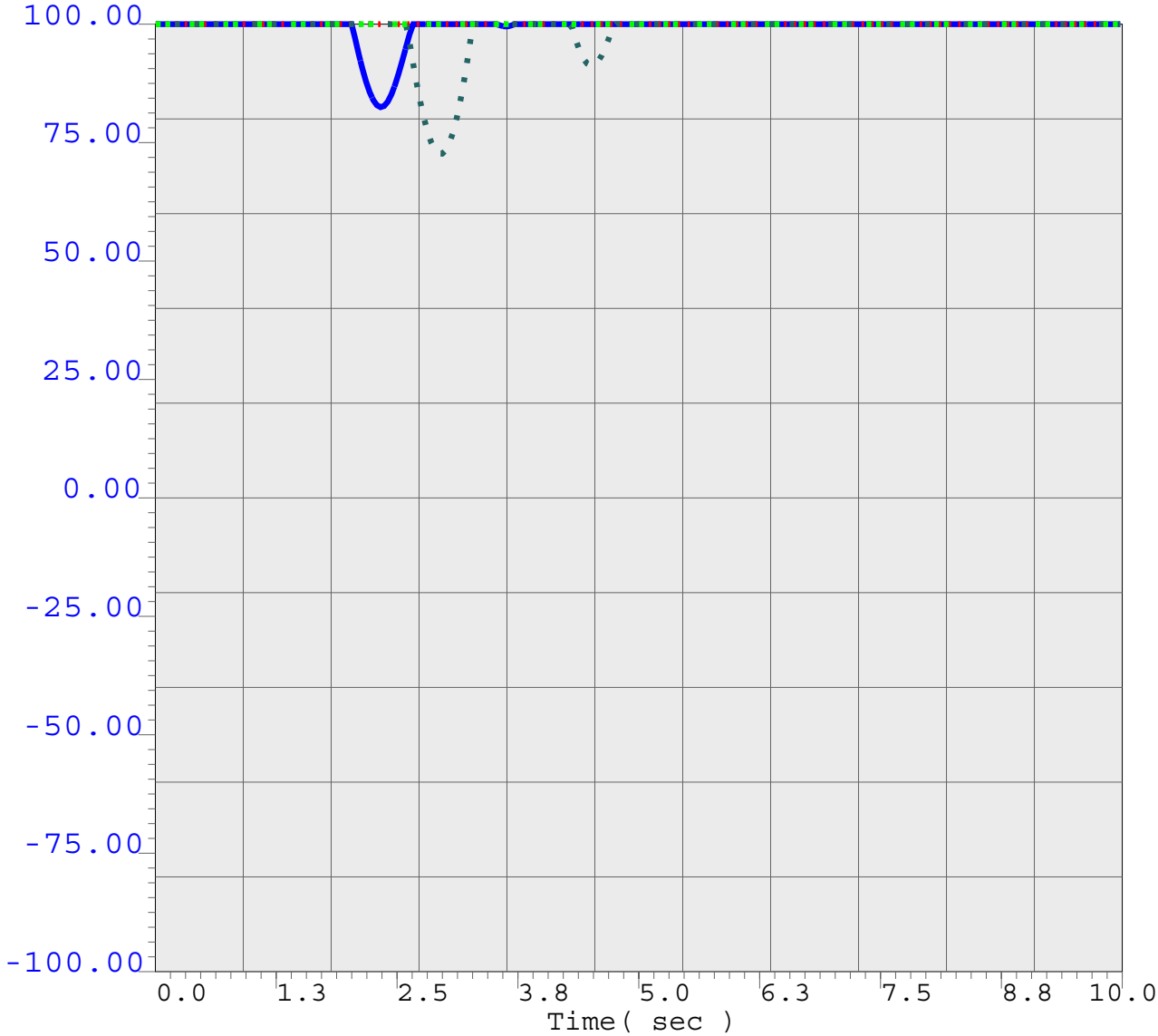

___	-100.0	ang	24714	ALTA 1G	13.8	1	1	100.0
....	-100.0	ang	24747	OXBOW G1	13.8	1	1	100.0
_ _	-100.0	ang	24709	BSPHYD26	2.2	1	1	100.0
_ .	-100.0	ang	24711	CALGEN1G	13.8	1	1	100.0
_ _	-100.0	ang	24354		0.0	1		100.0

VICTORVILLE 2 PROJECT STUDIES

CASE NAME:sidewindermt\offpeak-postsm.sav

SCE [LOAD 16267 XCHGE -7135 GEN 10745][AA 1340V 2356M 1241D 1005VA]MW

[S.LUGO 3909MW][N.LUGO 1908MW][N.SONGS 1055MW][S.SONGS 1095MW]

[SYLMAR 865][VIC-LUGO 2033][EL-LUGO 1058][MHV-LUGO 648][PV-DV 2908]MW

BUS_FREQUENCY FOR SCE 230/115

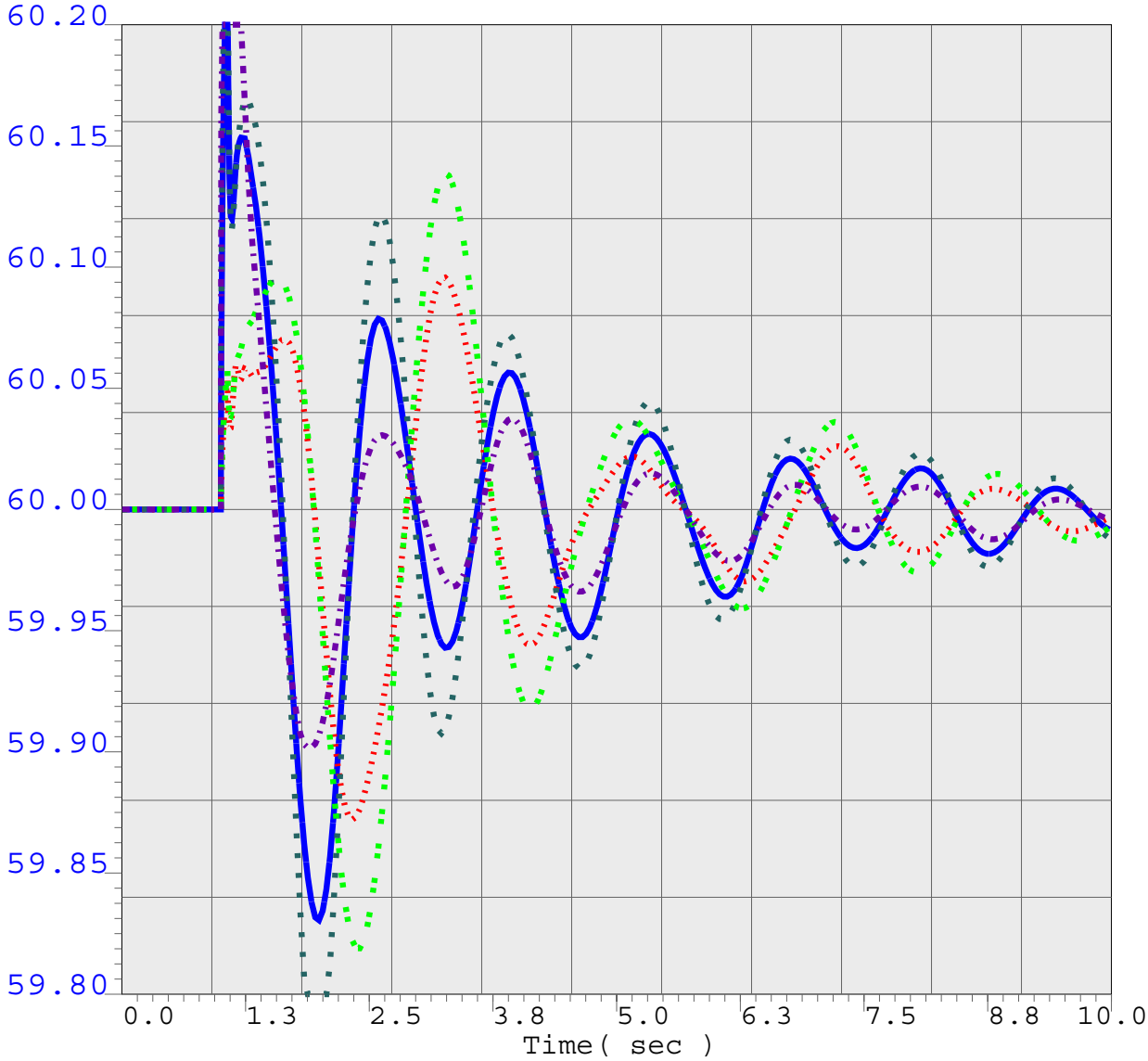

VICTORVILLE 2 PROJECT STUDIES

CASE NAME:sidewindermt\offpeak-postsm.sav

SCE [LOAD 16267 XCHGE -7135 GEN 10745][AA 1340V 2356M 1241D 1005VA]MW

[S.LUGO 3909MW][N.LUGO 1908MW][N.SONGS 1055MW][S.SONGS 1095MW]

[SYLMAR 865][VIC-LUGO 2033][EL-LUGO 1058][MHV-LUGO 648][PV-DV 2908]MW

```
RUN
*   3 phase 5 cycle fault at LUGO
*   Loss of LUGO     1 AA
*
*  CC cards for post-transient only
*
*   Fault bus at LUGO
FB   60.0 "LUGO    " 230.
* slg: FB   0.0 "LUGO    " 230. .00072  .0076
*
*   Clear fault at LUGO
CFB  65.0 "LUGO    " 230.
*
*   Trip LUGO     1 AA
*
DL   65.0 "LUGO    " 500. "LUGO    " 230. "1 "
*
*  Trip HDPP in 12 cycles after fault
*
TG   72.0 "HIDESST1"  20.00 "**"
TG   72.0 "HIDESCT3"  15.00 "**"
TG   72.0 "HIDESCT2"  15.00 "**"
*
```

BUS_VOLT_MAG FOR NORTH OF LUGO 230/115

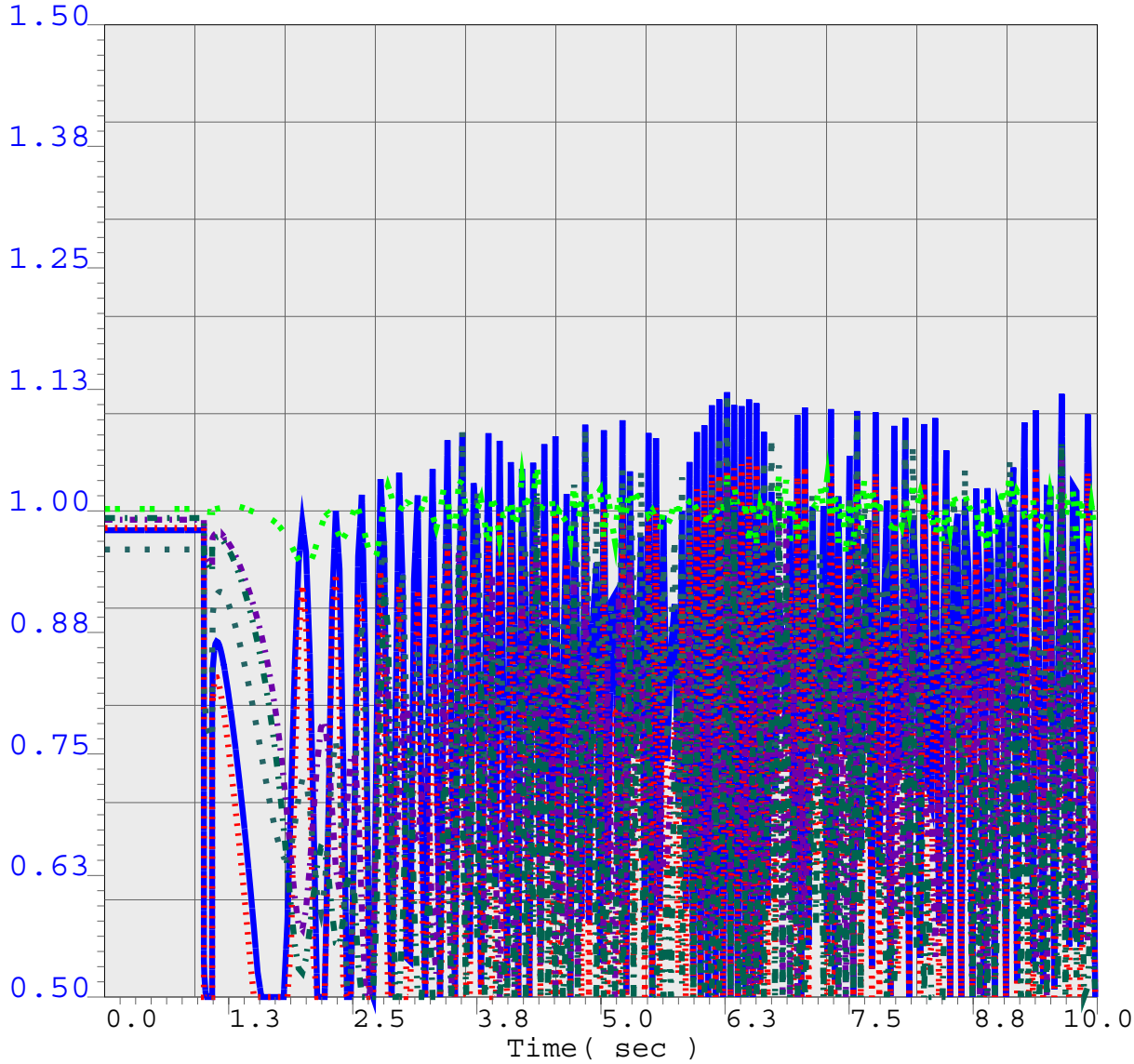

VICTORVILLE 2 PROJECT STUDIES

CASE NAME:sidewindermt\offpeak-postsm.sav

SCE [LOAD 16267 XCHGE -7135 GEN 10745][AA 1340V 2356M 1241D 1005VA]MW

[S.LUGO 3909MW][N.LUGO 1908MW][N.SONGS 1055MW][S.SONGS 1095MW]

[SYLMAR 865][VIC-LUGO 2033][EL-LUGO 1058][MHV-LUGO 648][PV-DV 2908]MW

VV-2-2010SP-post_LUGOAA-STO.chf

Fri Jul 21 16:53:25 2006

BUS_VOLT_MAG FOR NORTH OF LUGO 230/115

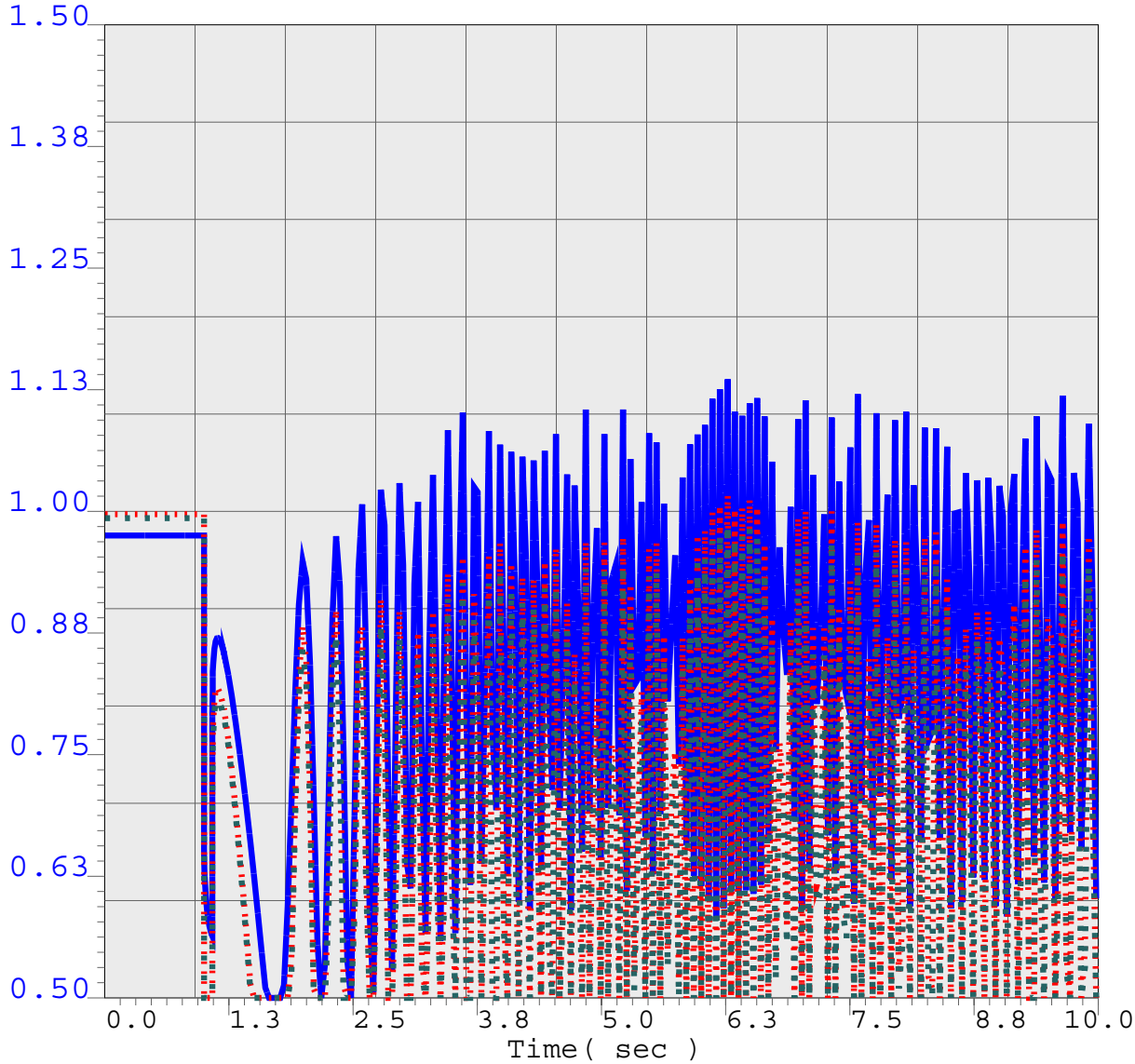

0.5	vbul	24702	KRAMER	115.0	1	1	1.5
0.5	vbul	24602	VICTOR	115.0	1	1	1.5
0.5	vbul	24608	SAVAGE	115.0	1	1	1.5
0.5	vbus	24793		0.0	1		1.5
0.5	vbug	24791		0.0	1		1.5

VICTORVILLE 2 PROJECT STUDIES

CASE NAME:sidewindermt\offpeak-postsm.sav

SCE [LOAD 16267 XCHGE -7135 GEN 10745][AA 1340V 2356M 1241D 1005VA]MW

[S.LUGO 3909MW][N.LUGO 1908MW][N.SONGS 1055MW][S.SONGS 1095MW]

[SYLMAR 865][VIC-LUGO 2033][EL-LUGO 1058][MHV-LUGO 648][PV-DV 2908]MW

BUS_VOLT_MAG FOR NORTH OF LUGO 230/115

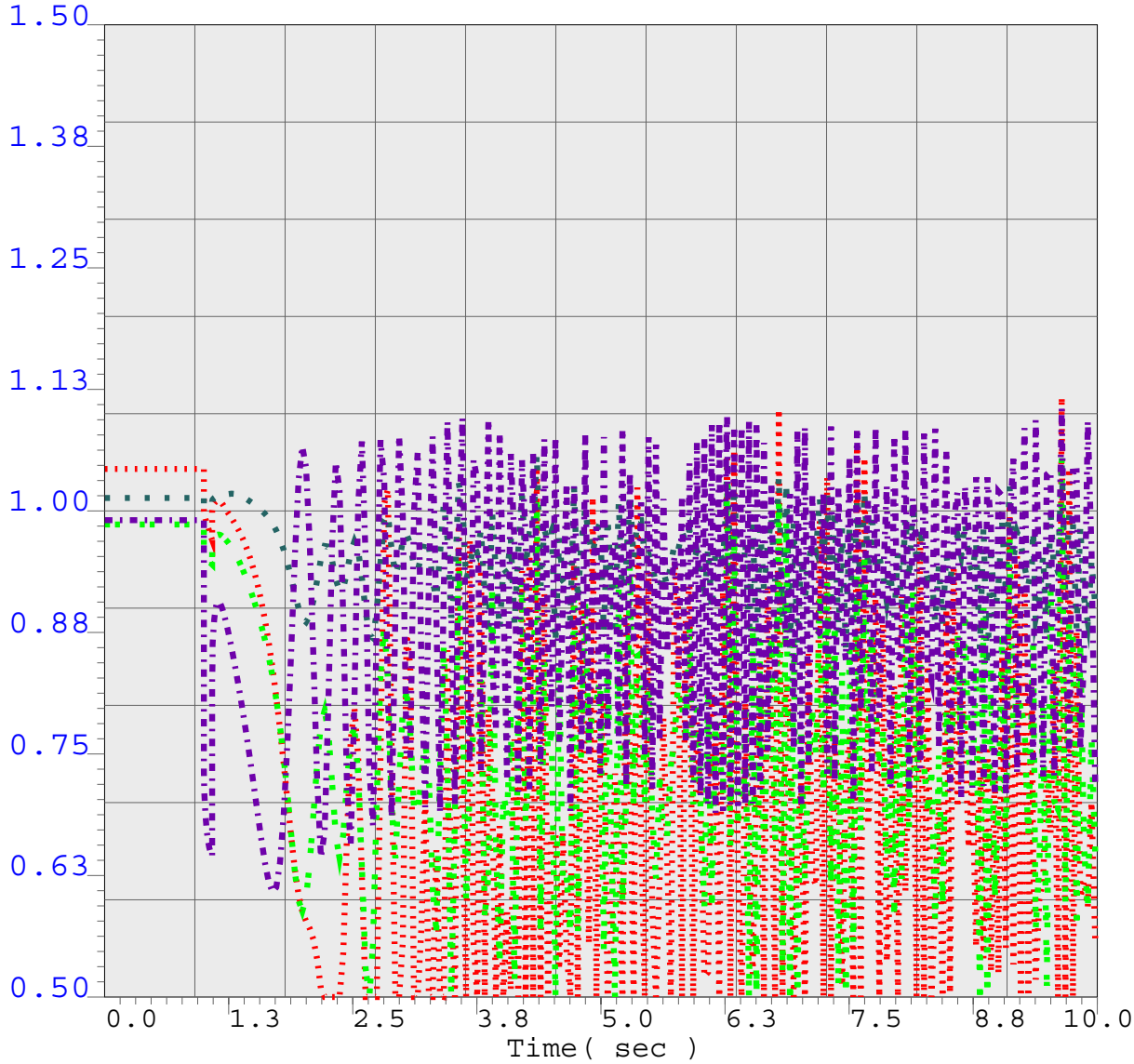

VICTORVILLE 2 PROJECT STUDIES

CASE NAME:sidewindermt\offpeak-postsm.sav

SCE [LOAD 16267 XCHGE -7135 GEN 10745][AA 1340V 2356M 1241D 1005VA]MW

[S.LUGO 3909MW][N.LUGO 1908MW][N.SONGS 1055MW][S.SONGS 1095MW]

[SYLMAR 865][VIC-LUGO 2033][EL-LUGO 1058][MHV-LUGO 648][PV-DV 2908]MW

MACHINE ANGLE

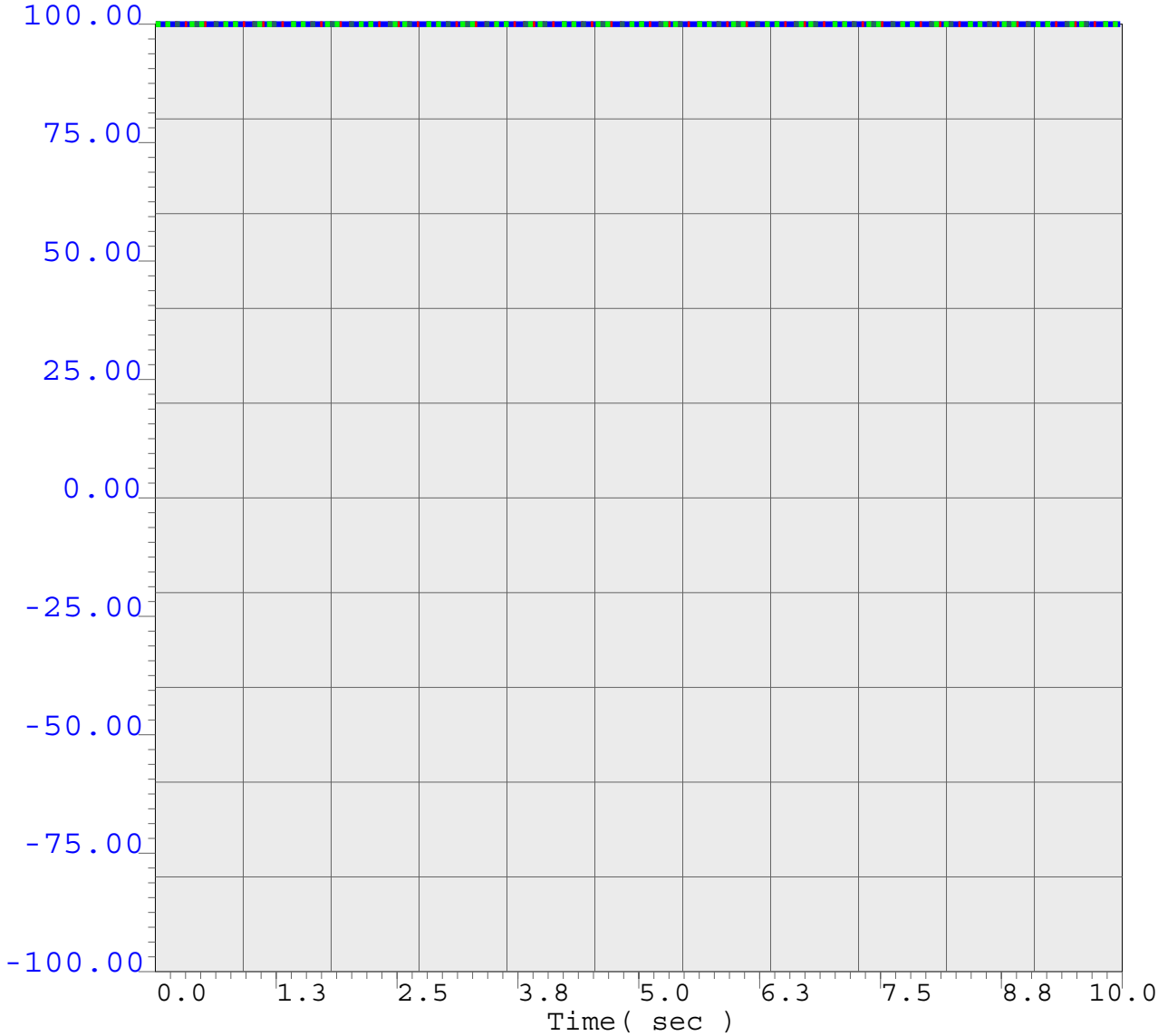

___	-100.0	ang	24714	ALTA 1G	13.8	1	1	100.0
....	-100.0	ang	24747	OXBOW G1	13.8	1	1	100.0
_ _	-100.0	ang	24709	BSPHYD26	2.2	1	1	100.0
_ .	-100.0	ang	24711	CALGEN1G	13.8	1	1	100.0
_ _	-100.0	ang	24354		0.0	1		100.0

VICTORVILLE 2 PROJECT STUDIES

CASE NAME:sidewindermt\offpeak-postsm.sav

SCE [LOAD 16267 XCHGE -7135 GEN 10745][AA 1340V 2356M 1241D 1005VA]MW

[S.LUGO 3909MW][N.LUGO 1908MW][N.SONGS 1055MW][S.SONGS 1095MW]

[SYLMAR 865][VIC-LUGO 2033][EL-LUGO 1058][MHV-LUGO 648][PV-DV 2908]MW

```
RUN
*   3 phase 4 cycle fault at KRAMER
*   Loss of KRAMER   230.00 - LUGO   230.00 1 & 2
*
*  CC cards for post-transient only
*
*   Fault bus at KRAMER
FB   60.0 "KRAMER  " 230.
* slg: FB   0.0 "KRAMER  " 230. .00072  .0076
*
*   Clear fault at KRAMER
CFB  64.0 "KRAMER  " 230.
*
*   Trip KRAMER   230.00 - LUGO   230.00 1 & 2
*
DL   64.0 "KRAMER  " 230. "LUGO    " 230. "1 "
DL   64.0 "KRAMER  " 230. "LUGO    " 230. "2 "
*
*  Trip COOLWATER, LSP and BLM STs in 10 cycles after fault
*
TG   70.0 "ALTA 3ST"  13.80 "**"
TG   70.0 "ALTA 4ST"  13.80 "**"
*
DL   70.0 "LUZ LSP " 230. "KRAMER  " 230. "1 "
TG   70.0 "LUZ8  G "  13.80 "**"
TG   70.0 "LUZ9  G "  13.80 "**"
*
DL   70.0 "BLM WEST" 230. "KRAMER  " 230. "1 "
TG   70.0 "NAVYII4G"  13.80 "**"
TG   70.0 "NAVYII5G"  13.80 "**"
TG   70.0 "NAVYII6G"  13.80 "**"
TG   70.0 "BLM  E7G"  13.80 "**"
TG   70.0 "BLM  E8G"  13.80 "**"
TG   70.0 "BLM  W9G"  13.80 "**"
*
*  Trip CASA DIABLO etc. in 12 cycles after fault
*
TG   72.0 "OXBOW G1"  13.80 "**"
*
*  Trip COOLWATER CTs in 16 cycles after fault
*
TG   76.0 "ALTA 3GT"  13.80 "**"
TG   76.0 "ALTA 4GT"  13.80 "**"
*
```

Notes: With A Third AA Transformer Bank at LUGO Sustation

BUS_VOLT_MAG FOR NORTH OF LUGO 230/115

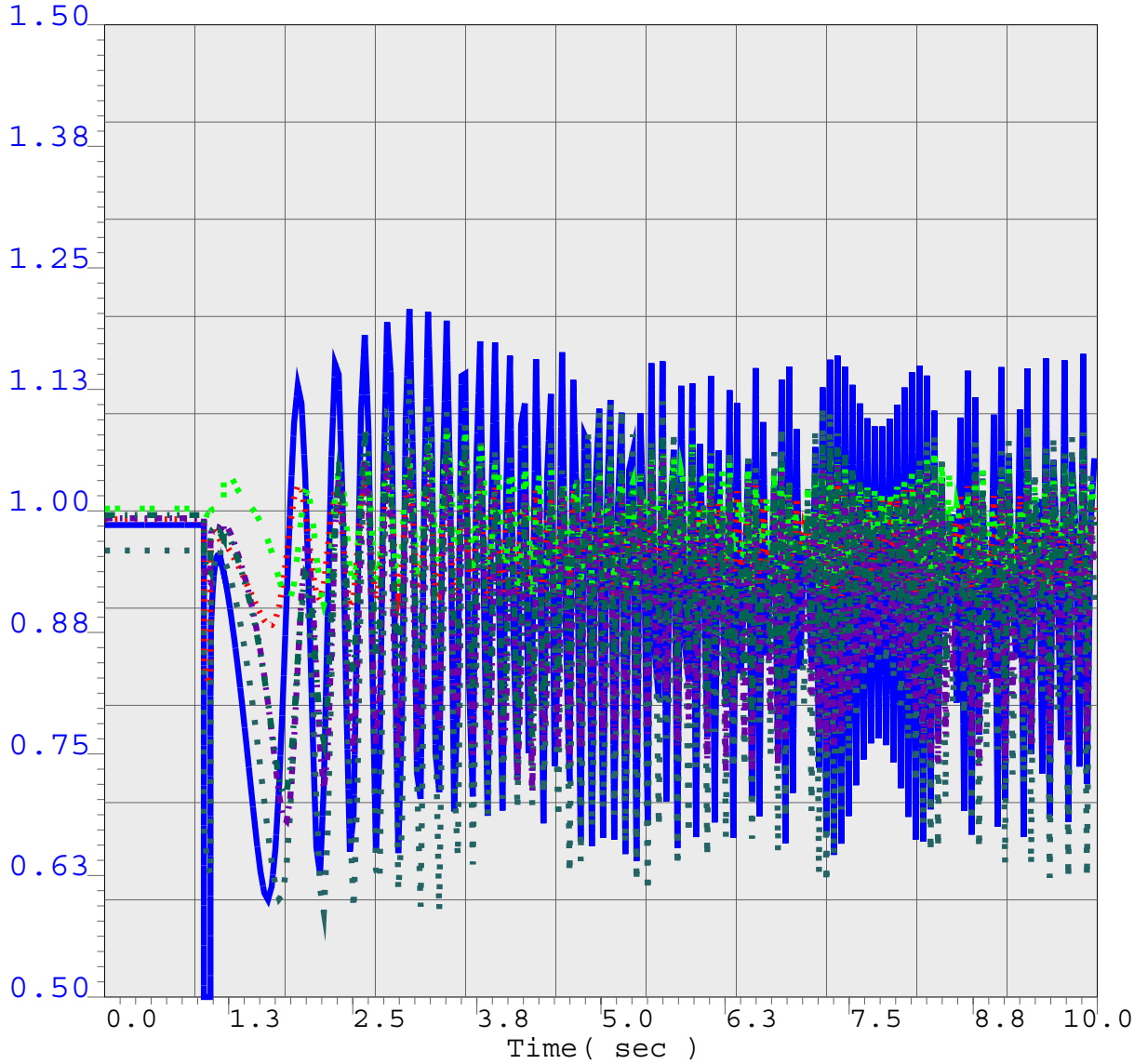

0.5	vbus	24701	KRAMER	230.0	1	1	1.5
0.5	vbus	24601	VICTOR	230.0	1	1	1.5
0.5	vbul	24731	INYOKERN	115.0	1	1	1.5
0.5	vbug	24747	OXBOW G1	13.8	1	1	1.5
0.5	vbus	24723	CONTROL	115.0	1	1	1.5
0.5	vbus	24730	INYO PS	115.0	1	1	1.5

VICTORVILLE 2 PROJECT STUDIES

CASE NAME:sidewindermt\offpeak-postsm.sav

SCE [LOAD 16267 XCHGE -7135 GEN 10745][AA 1340V 2356M 1241D 1005VA]MW

[S.LUGO 3909MW][N.LUGO 1908MW][N.SONGS 1055MW][S.SONGS 1095MW]

[SYLMAR 865][VIC-LUGO 2033][EL-LUGO 1058][MHV-LUGO 648][PV-DV 2908]MW

vv-2-2010sp-post-newaabank_KRAMER-LUGO-DLO-OXBOW.chf

Thu Jul 27 13:07:06 2006

BUS_VOLT_MAG FOR NORTH OF LUGO 230/115

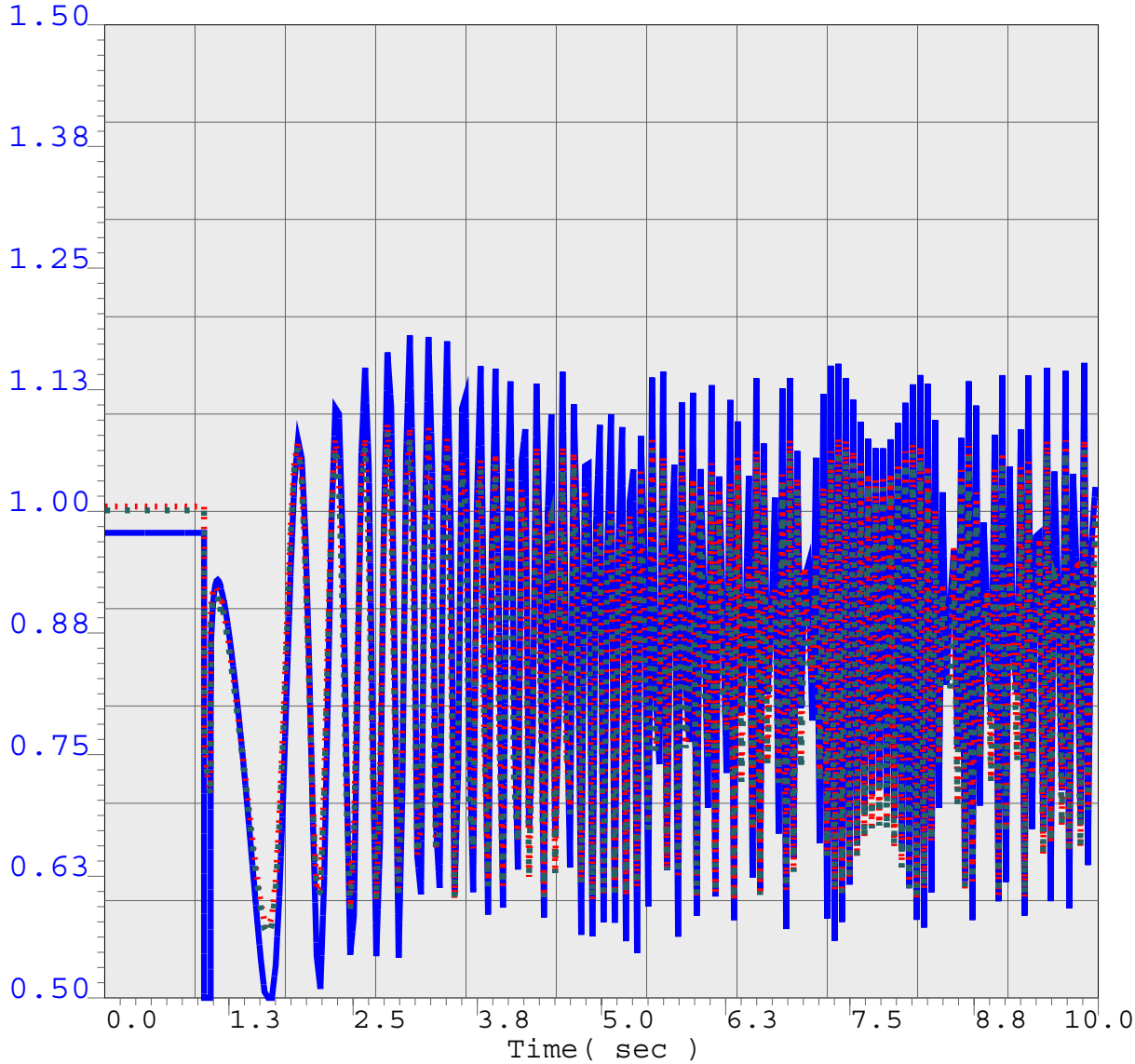

0.5	vbul	24702	KRAMER	115.0	1	1	1.5
0.5	vbul	24602	VICTOR	115.0	1	1	1.5
0.5	vbul	24608	SAVAGE	115.0	1	1	1.5
0.5	vbus	24793		0.0	1		1.5
0.5	vbug	24791		0.0	1		1.5

VICTORVILLE 2 PROJECT STUDIES

CASE NAME:sidewindermt\offpeak-postsm.sav

SCE [LOAD 16267 XCHGE -7135 GEN 10745][AA 1340V 2356M 1241D 1005VA]MW

[S.LUGO 3909MW][N.LUGO 1908MW][N.SONGS 1055MW][S.SONGS 1095MW]

[SYLMAR 865][VIC-LUGO 2033][EL-LUGO 1058][MHV-LUGO 648][PV-DV 2908]MW

BUS_VOLT_MAG FOR NORTH OF LUGO 230/115

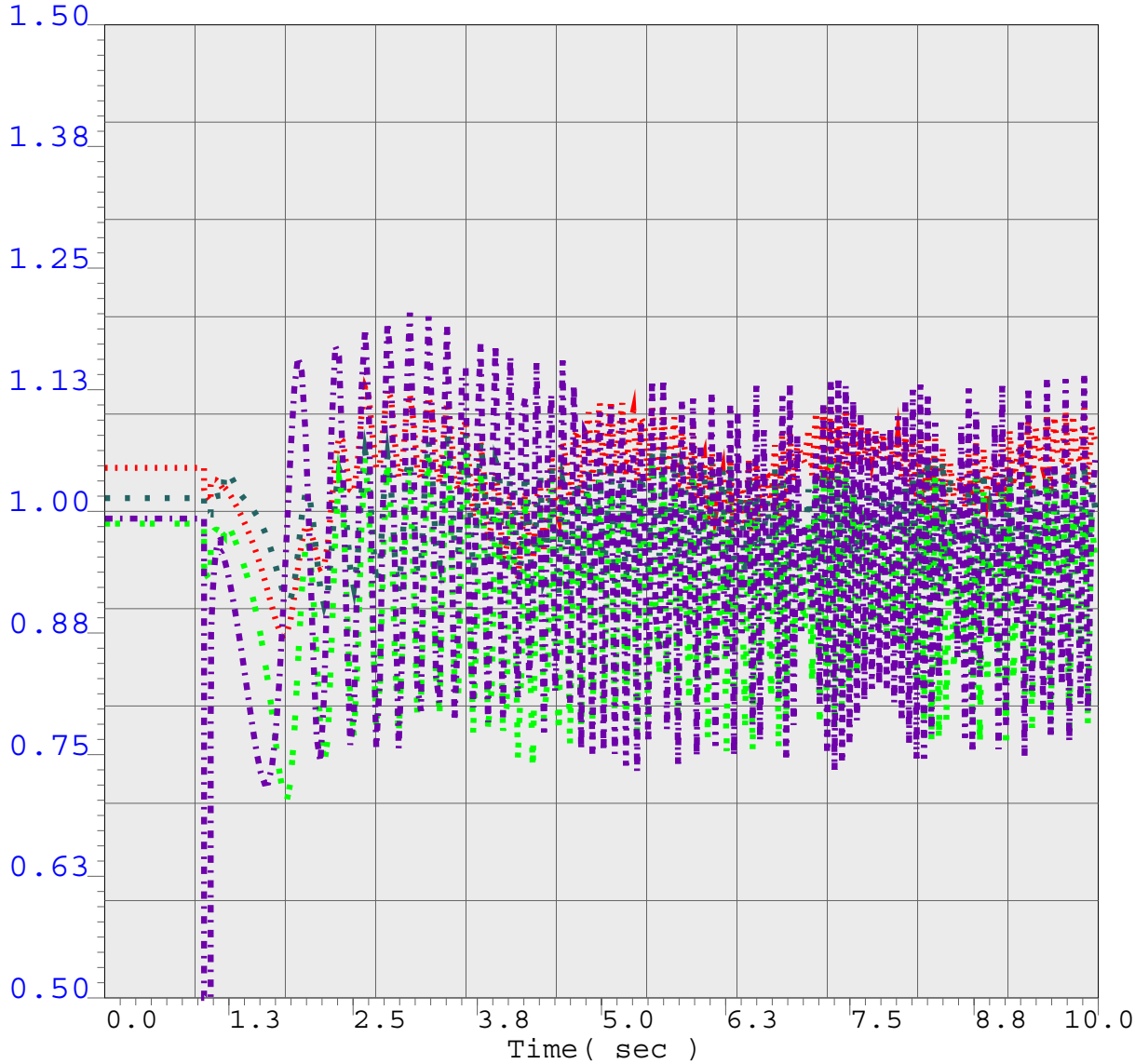

VICTORVILLE 2 PROJECT STUDIES

CASE NAME:sidewindermt\offpeak-postsm.sav

SCE [LOAD 16267 XCHGE -7135 GEN 10745][AA 1340V 2356M 1241D 1005VA]MW

[S.LUGO 3909MW][N.LUGO 1908MW][N.SONGS 1055MW][S.SONGS 1095MW]

[SYLMAR 865][VIC-LUGO 2033][EL-LUGO 1058][MHV-LUGO 648][PV-DV 2908]MW

BUS_FREQUENCY FOR SCE 230/115

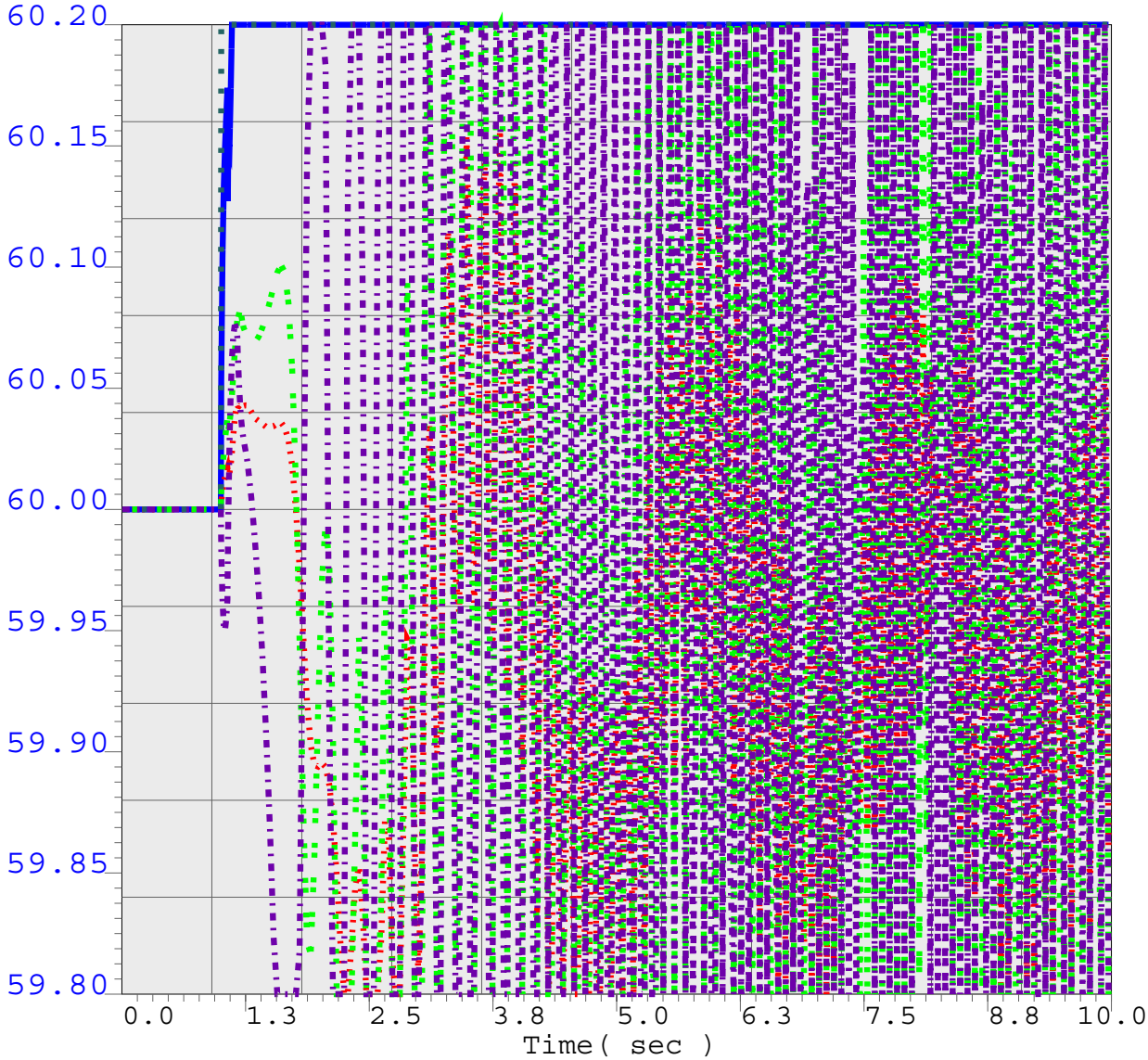

VICTORVILLE 2 PROJECT STUDIES

CASE NAME:sidewindermt\offpeak-postsm.sav

SCE [LOAD 16267 XCHGE -7135 GEN 10745][AA 1340V 2356M 1241D 1005VA]MW

[S.LUGO 3909MW][N.LUGO 1908MW][N.SONGS 1055MW][S.SONGS 1095MW]

[SYLMAR 865][VIC-LUGO 2033][EL-LUGO 1058][MHV-LUGO 648][PV-DV 2908]MW

BUS_FREQUENCY FOR SCE 230/115

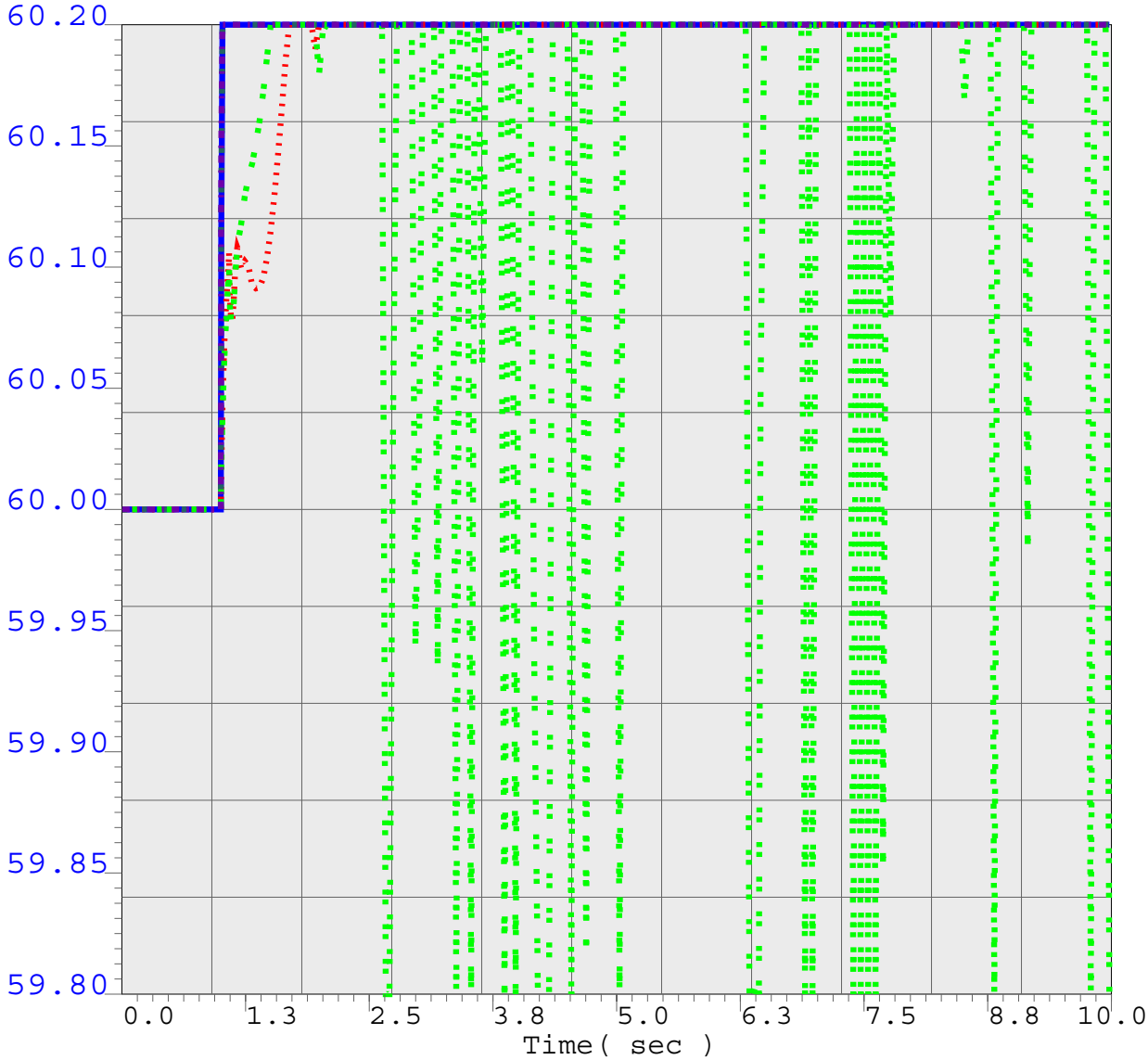

VICTORVILLE 2 PROJECT STUDIES

CASE NAME:sidewindermt\offpeak-postsm.sav

SCE [LOAD 16267 XCHGE -7135 GEN 10745][AA 1340V 2356M 1241D 1005VA]MW

[S.LUGO 3909MW][N.LUGO 1908MW][N.SONGS 1055MW][S.SONGS 1095MW]

[SYLMAR 865][VIC-LUGO 2033][EL-LUGO 1058][MHV-LUGO 648][PV-DV 2908]MW

```
RUN
*   3 phase 4 cycle fault at KRAMER
*   Loss of KRAMER   230.00 - LUGO   230.00 1 & 2
*
*  CC cards for post-transient only
*
*   Fault bus at KRAMER
FB   60.0 "KRAMER  " 230.
*
*
*   Clear fault at KRAMER
CFB  64.0 "KRAMER  " 230.
*
*   Trip KRAMER   230.00 - LUGO   230.00 1 & 2
*
DL   64.0 "KRAMER  " 230. "LUGO    " 230. "1 "
DL   64.0 "KRAMER  " 230. "LUGO    " 230. "2 "
*
*  Trip COOLWATER, LSP and BLM STs in 10 cycles after fault
*
TG   70.0 "ALTA 3ST"  13.80 "**"
TG   70.0 "ALTA 4ST"  13.80 "**"
*
DL   70.0 "LUZ LSP " 230. "KRAMER  " 230. "1 "
TG   70.0 "LUZ8  G "  13.80 "**"
TG   70.0 "LUZ9  G "  13.80 "**"
*
DL   70.0 "BLM WEST" 230. "KRAMER  " 230. "1 "
TG   70.0 "NAVYII4G"  13.80 "**"
TG   70.0 "NAVYII5G"  13.80 "**"
TG   70.0 "NAVYII6G"  13.80 "**"
TG   70.0 "BLM  E7G"  13.80 "**"
TG   70.0 "BLM  E8G"  13.80 "**"
TG   70.0 "BLM  W9G"  13.80 "**"
*
*  Trip OXBOW
TG   72.0 "OXBOW G1"  13.80 "**"
*
*  Trip COOLWATER CTs in 16 cycles after fault
*
TG   75.0 "ALTA31GT"  13.80 "**"
TG   75.0 "ALTA32GT"  13.80 "**"
TG   75.0 "ALTA41GT"  13.80 "**"
TG   75.0 "ALTA42GT"  13.80 "**"
*
TG   78.0 "MC GEN  "  13.80 "**"
*
```

NOTES: With A Third AA Transformer Bank at LUGO Substation

BUS_VOLT_MAG FOR NORTH OF LUGO 230/115

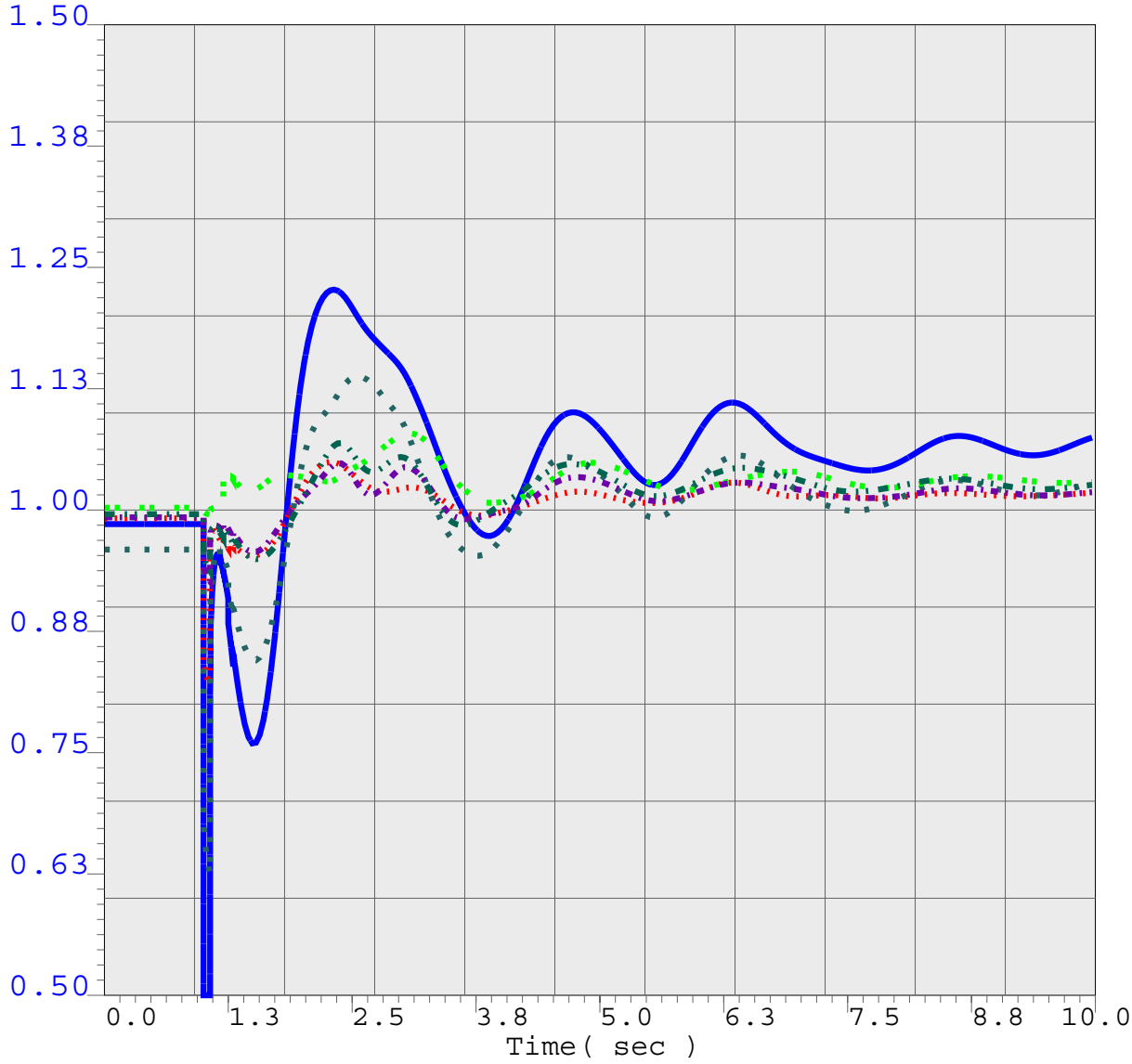

0.5	vbus	24701	KRAMER	230.0	1	1	1.5
0.5	vbus	24601	VICTOR	230.0	1	1	1.5
0.5	vbul	24731	INYOKERN	115.0	1	1	1.5
0.5	vbug	24747	OXBOW G1	13.8	1	1	1.5
0.5	vbus	24723	CONTROL	115.0	1	1	1.5
0.5	vbus	24730	INYO PS	115.0	1	1	1.5

VICTORVILLE 2 PROJECT STUDIES

CASE NAME:sidewindermt\offpeak-postsm.sav

SCE [LOAD 16267 XCHGE -7135 GEN 10745][AA 1340V 2356M 1241D 1005VA]MW

[S.LUGO 3909MW][N.LUGO 1908MW][N.SONGS 1055MW][S.SONGS 1095MW]

[SYLMAR 865][VIC-LUGO 2033][EL-LUGO 1058][MHV-LUGO 648][PV-DV 2908]MW

vv-2-2010sp-post-newaabank_KRAMER-LUGO-DLO-OXB-MCG.chf

.

Thu Jul 27 14:18:29 2006

BUS_VOLT_MAG FOR NORTH OF LUGO 230/115

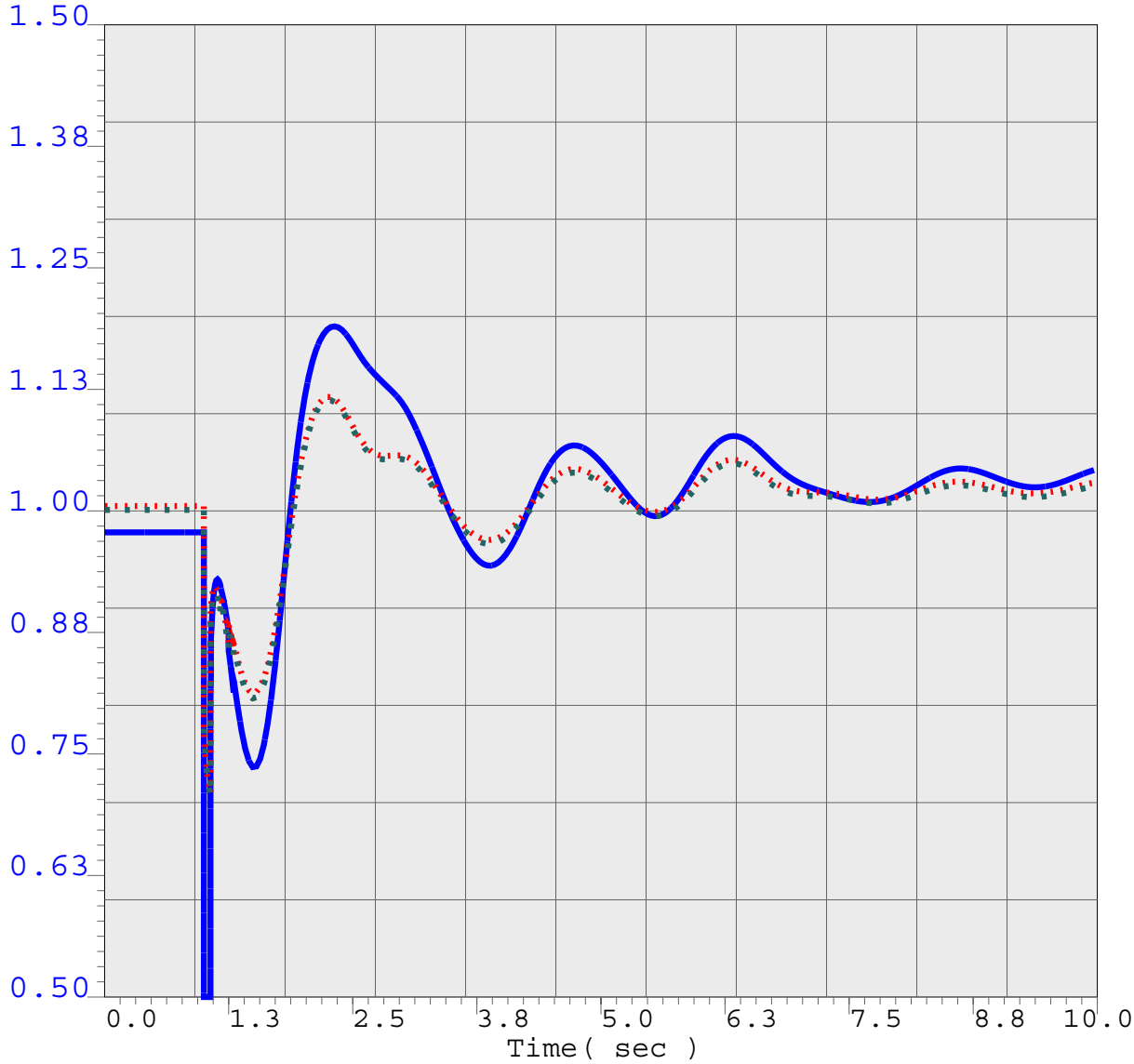

___	0.5	vbul	24702	KRAMER	115.0	1	1	1.5
....	0.5	vbul	24602	VICTOR	115.0	1	1	1.5
_ _	0.5	vbul	24608	SAVAGE	115.0	1	1	1.5
_ .	0.5	vbus	24793		0.0	1		1.5
_ _	0.5	vbug	24791		0.0	1		1.5

VICTORVILLE 2 PROJECT STUDIES

CASE NAME:sidewindermt\offpeak-postsm.sav

SCE [LOAD 16267 XCHGE -7135 GEN 10745][AA 1340V 2356M 1241D 1005VA]MW

[S.LUGO 3909MW][N.LUGO 1908MW][N.SONGS 1055MW][S.SONGS 1095MW]

[SYLMAR 865][VIC-LUGO 2033][EL-LUGO 1058][MHV-LUGO 648][PV-DV 2908]MW

BUS_VOLT_MAG FOR NORTH OF LUGO 230/115

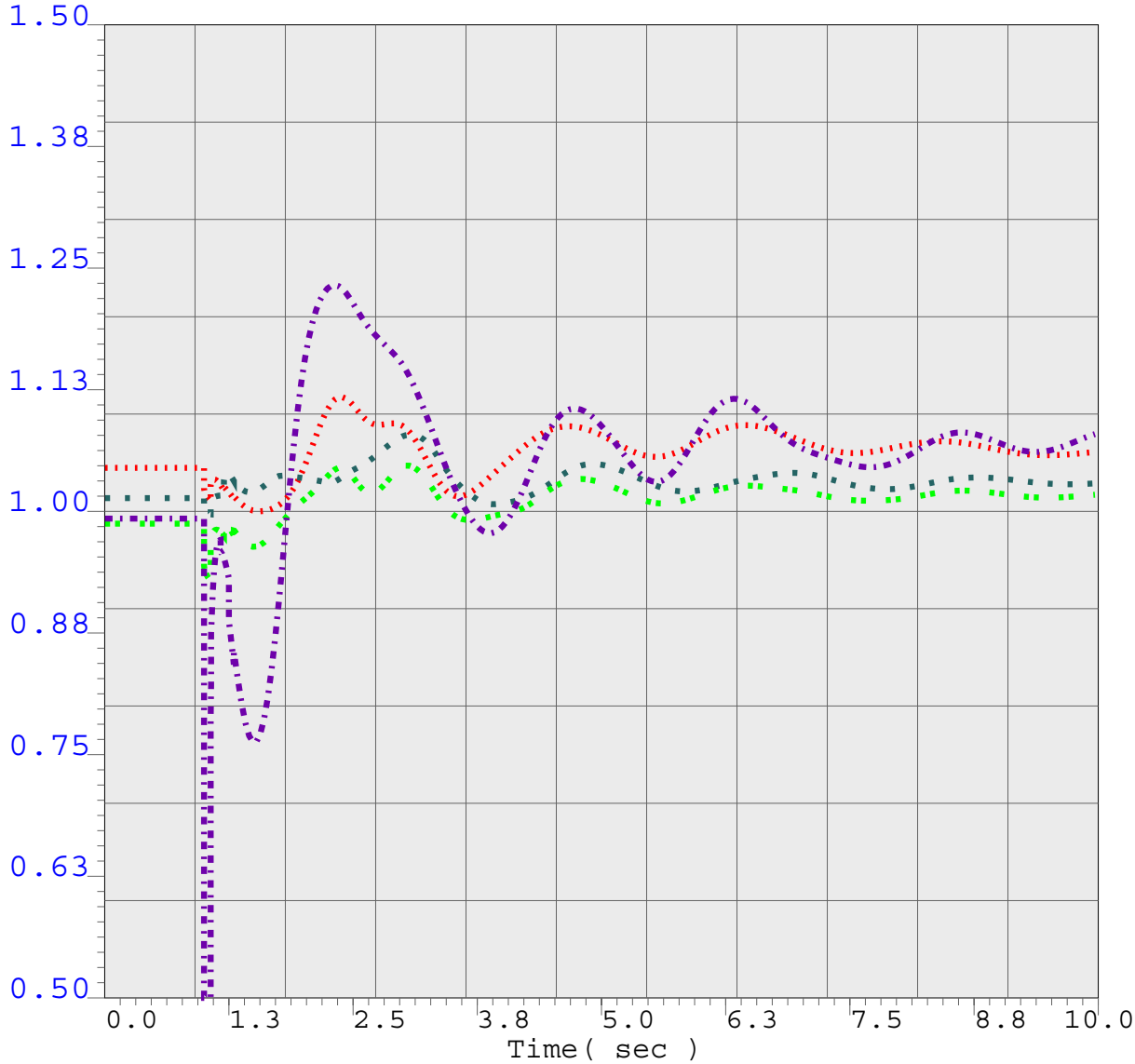

VICTORVILLE 2 PROJECT STUDIES

CASE NAME:sidewindermt\offpeak-postsm.sav

SCE [LOAD 16267 XCHGE -7135 GEN 10745][AA 1340V 2356M 1241D 1005VA]MW

[S.LUGO 3909MW][N.LUGO 1908MW][N.SONGS 1055MW][S.SONGS 1095MW]

[SYLMAR 865][VIC-LUGO 2033][EL-LUGO 1058][MHV-LUGO 648][PV-DV 2908]MW

BUS_FREQUENCY FOR SCE 230/115

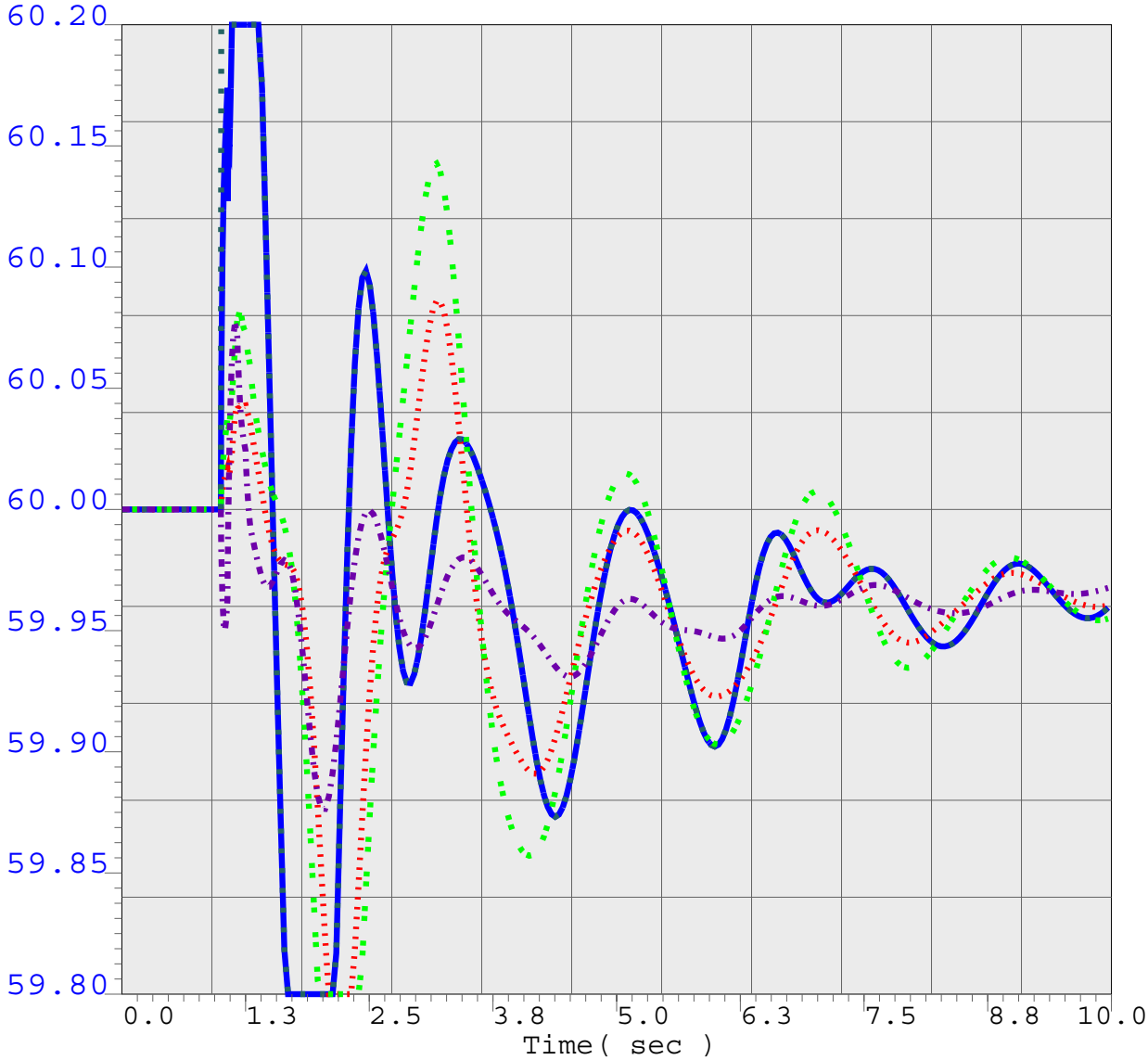

VICTORVILLE 2 PROJECT STUDIES

CASE NAME:sidewindermt\offpeak-postsm.sav

SCE [LOAD 16267 XCHGE -7135 GEN 10745][AA 1340V 2356M 1241D 1005VA]MW

[S.LUGO 3909MW][N.LUGO 1908MW][N.SONGS 1055MW][S.SONGS 1095MW]

[SYLMAR 865][VIC-LUGO 2033][EL-LUGO 1058][MHV-LUGO 648][PV-DV 2908]MW

MACHINE ANGLE

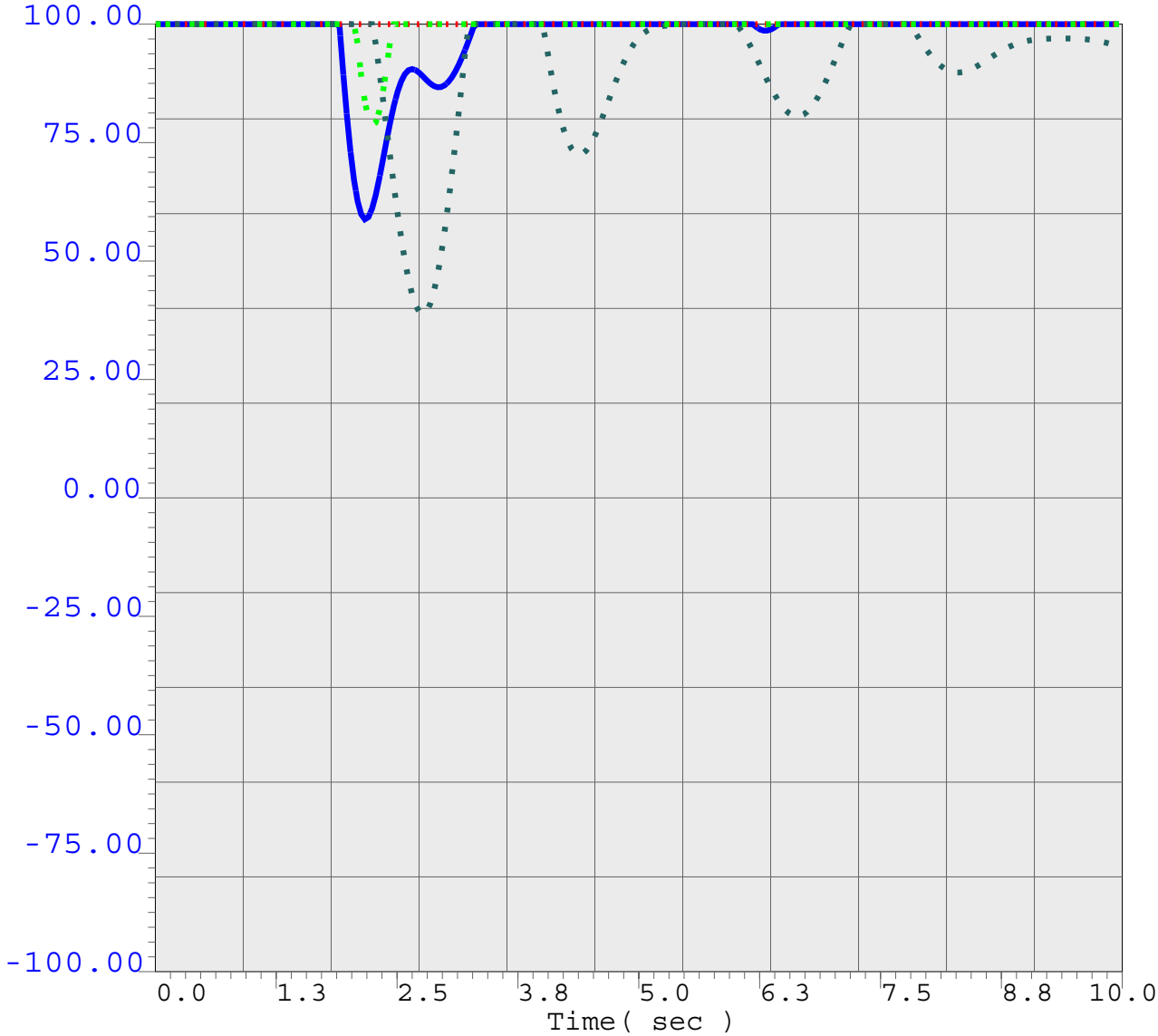

___	-100.0	ang	24714	ALTA 1G	13.8	1	1	100.0
....	-100.0	ang	24747	OXBOW G1	13.8	1	1	100.0
_ _	-100.0	ang	24709	BSPHYD26	2.2	1	1	100.0
_ .	-100.0	ang	24711	CALGEN1G	13.8	1	1	100.0
_._	-100.0	ang	24354		0.0	1		100.0

VICTORVILLE 2 PROJECT STUDIES

CASE NAME:sidewindermt\offpeak-postsm.sav

SCE [LOAD 16267 XCHGE -7135 GEN 10745][AA 1340V 2356M 1241D 1005VA]MW

[S.LUGO 3909MW][N.LUGO 1908MW][N.SONGS 1055MW][S.SONGS 1095MW]

[SYLMAR 865][VIC-LUGO 2033][EL-LUGO 1058][MHV-LUGO 648][PV-DV 2908]MW

APPENDIX E

ATTACHMENT A

Attachment A
To Appendix 1
Interconnection Request

LARGE GENERATING FACILITY DATA

Note: All information contained herein shall be considered preliminary at this time as it is subject to detailed design and verification later.

Provide three copies of this completed form pursuant to Section 7 of Appendix 1.

1. Provide two original prints and one reproducible copy (no larger than 36" x 24") of the following:

A. Site drawing to scale, showing generator location and point of interconnection with the ISO Controlled Grid.
Refer to Bibb Drawings 2005-038-SP-001 & 2005-038-SP-002

B. Single-line diagram showing applicable equipment such as generating units, step-up transformers, auxiliary transformers, switches/disconnects of the proposed interconnection, including the required protection devices and circuit breakers. For wind generator farms, the one line diagram should include the distribution lines connecting the various groups of generating units, the generator capacitor banks, the step up transformers, the distribution lines, and the substation transformers and capacitor banks at the point of interconnection with the utility.
Refer to Navigant Drawing Vic-2_1-line_Detail.vsd Pg. 1 & 2

2. Generating Facility Information

A. Total Generating Facility rated output (kW):
576,670 kW @ 77F/40%RH

B. Generating Facility auxiliary load (kW):
~13,590 kW

C. Project net capacity (kW):
563,080 kW @ 77F/40%RH

D. Standby load when Generating Facility is off-line (kW):
~2,500 kW

E. Number of Generating Units:
Three (2x1 Combined cycle = CTG1, CTG2, & STG1)
(Please repeat the following items for each generator)

F. Individual generator rated output (kW for each unit):
CTG1=154,200 kW, CTG2=154,200 kW, STG1=268,270 kW (gross @ 77F/40%RH)

G. Manufacturer:
CTG1=GE Model PG7241 FA, CTG2=GE Model PG7241 FA, STG=GE D-11

H. Year Manufactured:
CTG1=New, CTG2=New, STG1=New

I. Nominal Terminal Voltage:
CTG1=18kV, CTG2=18 kV, STG=18 kV

J. Rated Power Factor (%):
CTG1=0.85 (lag), CTG2=0.85 (lag), STG1=0.85 (lag)

K. Type (Induction, Synchronous, D.C. with Inverter):
CTG1=Synchronous, CTG2=Synchronous, STG1=Synchronous.

L. Phase (3 phase or single phase):
CTG1=3 phase, CTG2 = 3 phase, STG1 = 3 phase

M. Connection (Delta, Grounded WYE, Ungrounded WYE, impedance grounded):
Grounded WYE

N. Generator Voltage Regulation Range:
CTG1=0.95 to 1.05, CTG2=0.95 to 1.05, STG1=0.95 to 1.05

O. Generator Power Factor Regulation Range:
CTG1=0.85 lag to 0.95 lead, CTG2=0.85 lag to 0.95 lead, STG1=0.85 lag to 0.95 lead

P. For combined cycle plants, specify the plant output for an outage of the steam turbine or an outage of a single combustion turbine:
- **STG OUTAGE = 294,810 kW @ 77F/40%RH**
- **ONE CTG OUTAGE = 266,740 kW @ 77F/40%RH**

3. Synchronous Generator – General Information:
(Please repeat the following for each generator)

A. Rated Generator speed (rpm):
CTG1=3,600, CTG2=3,600, STG=3,600

B. Rated MVA:
CTG1=195.5 MVA, CTG2=195.5 MVA, STG1=355.0 MVA

C. Rated Generator Power Factor:
CTG1=0.85 (lag), CTG2=0.85 (lag), STG1=0.85 (lag)

D. Generator Efficiency at Rated Load (%):
CTG1=TBD, CTG2=TBD, STG1=TBD

E. Moment of Inertia (including prime mover):
CTG1=TBD, CTG2=TBD, STG1=TBD

F. Inertia Time Constant (on machine base) H:
CTG1=4.85 kW-sec/kVA, CTG2=4.85 kW-sec/kVA, STG1= 2.91 kW-sec/kVA

G. SCR (Short-Circuit Ratio - the ratio of the field current required for rated open-circuit voltage to the field current required for rated short-circuit current)
CTG1=0.50, CTG2=0.50, STG1=0.48

H. Please attach generator reactive capability curves.
CTG1, CTG2 STG1 = SEE ATTACHED GE CURVE/DATA

I. Rated Hydrogen Cooling Pressure in psig (Steam Units only):
STG1= 45 psig

J. Please attach a plot of generator terminal voltage versus field current that shows the air gap line, the open-circuit saturation curve, and the saturation curve at full load and rated power factor.
CTG1, CTG2 & STG1 = SEE ATTACHED GE CURVE/DATA

4. Excitation System Information
(Please repeat the following for each generator)

A. Indicate the Manufacturer **GE** and Type **EX2000 Busfed** of excitation system used for the generator. For exciter type, please choose from 1 to 8 below or describe the specific excitation system.

1) Rotating DC commutator exciter with continuously acting regulator. The regulator power source is independent of the generator terminal voltage and current.

2) Rotating DC commentator exciter with continuously acting regulator. The regulator power source is bus fed from the generator terminal voltage.

3) Rotating DC commutator exciter with non-continuously acting regulator (i.e., regulator adjustments are made in discrete increments).

4) Rotating AC Alternator Exciter with non-controlled (diode) rectifiers. The regulator power source is independent of the generator terminal voltage and current (not bus-fed).

5) Rotating AC Alternator Exciter with controlled (thyristor) rectifiers. The regulator power source is fed from the exciter output voltage.

6) Rotating AC Alternator Exciter with controlled (thyristor) rectifiers.

7) Static Exciter with controlled (thyristor) rectifiers. The regulator power source is bus-fed from the generator terminal voltage.

8) Static Exciter with controlled (thyristor) rectifiers. The regulator power source is bus-fed from a combination of generator terminal voltage and current (compound-source controlled rectifiers system.

CTG1, CTG2 & STG1: Manufacturer GE, Type: EX2000 Busfed Exciter (Type 8):

B. Attach a copy of the block diagram of the excitation system from its instruction manual. The diagram should show the input, output, and all feedback loops of the excitation system.
See Attached GE Curve/Data

C. Excitation system response ratio (ASA):
Nominal Response at rated input = 2

D. Full load rated exciter output voltage:
CTG1 & CTG2 = 300 V, STG1 = 600 V

E. Maximum exciter output voltage (ceiling voltage):
CTG1 & CTG2 = (VBmax=6.31) STG1=(VBmax=7.14)

F. Other comments regarding the excitation system?

5. Power System Stabilizer Information.

(Please repeat the following for each generator. All new generators are required to install PSS unless an exemption has been obtained from WECC. Such an exemption can be obtained for units that do not have suitable excitation systems.)

CTG1, CTG2 & STG1

A. Manufacturer:
GE

B. Is the PSS digital or analog?
Digital

C. Note the input signal source for the PSS?
Bus frequency **X** Shaft speed Bus Voltage
X Other (Electric Power)

D. Please attach a copy of a block diagram of the PSS from the PSS Instruction Manual and the correspondence between dial settings and the time constants or PSS gain.

E: Other comments regarding the PSS?

6. Turbine-Governor Information BASIS:

(Please repeat the following for each generator)

Please complete Part A for steam, gas or combined-cycle turbines, Part B for hydro turbines, and Part C for both.

A. Steam, gas or combined-cycle turbines:

1.) List type of unit (Steam, Gas, or Combined-cycle):
COMBINED CYCLE (2XGE PG7241(7FA) CTG'S X 1 STG GE D11

2.) If steam or combined-cycle, does the turbine system have a reheat process (i.e., both high and low pressure turbines)?
REHEAT=YES (TO 1050 DEG F)

3.) If steam with reheat process, or if combined-cycle, indicate in the space provided, the percent of full load power produced by each turbine:
Low pressure turbine or gas turbine: **57%**
High pressure turbine or steam turbine: **43%**

B. Hydro turbines: **NOT APPLICABLE.**

1.) Turbine efficiency at rated load: **%**
2.) Length of penstock: **ft**
3.) Average cross-sectional area of the penstock: **ft2**
4.) Typical maximum head (vertical distance from the bottom of the penstock, at the gate, to the water level): **ft**
5.) Is the water supply run-of-the-river or reservoir:
6.) Water flow rate at the typical maximum head: **ft3/sec**
7.) Average energy rate: **kW-hrs/acre-ft**
8.) Estimated yearly energy production: **kW-hrs**

C. Complete this section for each machine, independent of the turbine type.

1.) Turbine manufacturer:
CTG1 & CTG2= GE; STG1=GE

2.) Maximum turbine power output:

CTG1 & CTG2 = 166,175 kW STG1 = 301,750 kW

3.) Minimum turbine power output (while on line):
CTG1 & CTG2 = 100,000 kW STG1 = 40,000 kW

4.) Governor information:

a. Droop setting (speed regulation):
CTG1 & CTG2 = 4%

b. Is the governor mechanical-hydraulic or electro-hydraulic (Electro-hydraulic governors have an electronic speed sensor and transducer
CTG1, CTG2 & STG1 = ELECTRONIC

c. Other comments regarding the turbine governor system?

7. Synchronous Generator and Associated Equipment – Dynamic Models:

Data Attached and input file included on CD

For each generator, governor, exciter and power system stabilizer, select the appropriate dynamic model from the General Electric PSLF Program Manual and provide the required input data. The manual is available on the GE website at www.gepower.com. Select the following links within the website: 1) Our Businesses, 2) GE Power Systems, 3) Energy Consulting, 4) GE PSLF Software, 5) GE PSLF User's Manual.

There are links within the GE PSLF User's Manual to detailed descriptions of specific models, a definition of each parameter, a list of the output channels, explanatory notes, and a control system block diagram. The block diagrams are also available on the Ca-ISO website.

If you require assistance in developing the models, we suggest you contact General Electric. Accurate models are important to obtain accurate study results. Costs associated with any changes in facility requirements that are due to differences between model data provided by the generation developer and the actual generator test data, may be the responsibility of the generation developer.

8. Induction Generator Data:

A. Rated Generator Power Factor at rated load: **NA**
B. Moment of Inertia (including prime mover): **NA**
C. Do you wish reclose blocking? **NA** ☐ Yes ☐ No
Note: Sufficient capacitance may be on the line now, or in the future, and the generator may self-excite unexpectedly.

9. Generator Short Circuit Data

For each generator, provide the following reactances expressed in p.u. on the generator base:

CTG1 & CTG2

A. X"1 – positive sequence subtransient reactance: **0.13**
B. X"2 – negative sequence subtransient reactance: **0.13**
C. X"0 – zero sequence subtransient reactance: **0.11**

STG1

A. X"1 – positive sequence subtransient reactance: **0.20**
B. X"2 – negative sequence subtransient reactance: **0.20**
C. X"0 – zero sequence subtransient reactance: **0.14**

Generator Grounding:

CTG1, CTG2 & STG1
A. ☐ Solidly grounded
B. ☒ Grounded through an impedance

Impedance value in p.u on generator base. **R: TBD p.u.**
X: TBD p.u.

C. ☐ Ungrounded

10. Step-Up Transformer Data
Data supplied could change with future plans.

For each step-up transformer, fill out the data form provided in Table 1.

11. Line Data

There is no need to provide data for new lines that are to be planned by the Participating TO. However, for transmission lines that are to be planned by the generation developer, please provide the following information: (**Data supplied could change with future plans**)

Nominal Voltage **230**
Line Length (miles): **10**
Line termination Points: **Victor Substation**
Conductor Type: **ACSR or requivalent** Size: **1590 and 954 kcmil**
If bundled: Number per phase: 2 (on 954) Bundle spacing: 18
Phase Configuration. Vertical: **XXX** Horizontal:
Phase Spacing (ft): A-B: **15** B-C: **15** C-A: **30**
Distance of lowest conductor to Ground: **~ 30 ft (At its lowest point)**
Ground Wire Type: **TBD** Size: **TBD** Distance to Ground: **~ 70 ft**
Attach Tower Configuration Diagram
Summer line ratings in amperes (normal and emergency) **1,615 (norm.)/1857 (emer.)**
Resistance (R): **0.0012 p.u.****
Reactance: (X): **0.0126 p.u****
Line Charging (B/2): **0.0411**
** On 100-MVA and nominal line voltage (kV) Base

12. Wind Generators NOT APPLICABLE

Number of generators to be interconnected pursuant to this Interconnection Request:

Elevation: ☐ Single Phase ☐ Three Phase

Inverter manufacturer, model name, number, and version:

List of adjustable setpoints for the protective equipment or software:

Field Volts:
Field Amperes:
Motoring Power (kW):
Neutral Grounding Resistor (If Applicable):
I_2^2t or K (Heating Time Constant):
Rotor Resistance:
Stator Resistance:
Stator Reactance:
Rotor Reactance:
Magnetizing Reactance:
Short Circuit Reactance:
Exciting Current:
Temperature Rise:
Frame Size:
Design Letter:
Reactive Power Required In Vars (No Load):
Reactive Power Required In Vars (Full Load):
Total Rotating Inertia, H: Per Unit on KVA Base

Note: A completed General Electric Company Power Systems Load Flow (PSLF) data sheet must be supplied with the Interconnection Request. If other data sheets are more appropriate to the proposed device then they shall be provided and discussed at Scoping Meeting.

TABLE 1

TRANSFORMER DATA – TO BE VERIFIED AND PROVIDED BY OEM LATER – Typical Data is Presented Below

UNIT
CTG1, CTG2

NUMBER OF TRANSFORMERS: **1 PER CTG** PHASE : **EACH TRANSFORMER IS 3 PHASE**

RATED KVA	H Winding	X Winding	Y Winding
Connection (Delta, Wye, Gnd.)	**WYE**	**DELTA**	**N/A**
55 C Rise 65 C Rise	**118/157/ 196 MVA, 65 deg. C (PENDING FINAL DESIGN)**	**118/157/ 196 MVA, 65 DEG C (PENDING FINAL DESIGN)**	
RATED VOLTAGE	**230 kV**	**18 kV**	
BIL	**TBD**	**150 kV**	
AVAILABLE TAPS (planned or existing)	**+/-2 X 2.5%**		
LOAD TAP CHANGER?	**No, de-energized tap changer**		
TAP SETTINGS	**1x5%, 1x2.5%, 1x-2.5%, 1x-5%**		
COOLING TYPE : ☐ OA	☐ OA/FA	☒ OA/FA/FA	☐ OA/FOA
IMPEDANCE	H-X	H-Y	X-Y
Percent	**~9%**	**N/A**	**N/A**
MVA Base	**118**	**N/A**	**N/A**
Tested Taps	**TBD**	**TBD**	**N/A**
WINDING RESISTANCE	H	X	Y
Ohms	**TBD**	**N/A**	

STG1

NUMBER OF TRANSFORMERS: **1** PHASE : **3 PHASE**

RATED KVA	H Winding	X Winding	Y Winding
Connection (Delta, Wye, Gnd.)	**WYE**	**DELTA**	**N/A**
55 C Rise 65 C Rise	**~300 MVA**	**~300 MVA**	
RATED VOLTAGE	**230 kV**	**18 kV**	
BIL	**TBD**	**TBD**	
AVAILABLE TAPS (planned or existing)	**+/-2 X 2.5%**		
LOAD TAP CHANGER?	**No, de-energized tap changer**		
TAP SETTINGS	**1x5%, 1x2.5%, 1x-2.5%, 1x-5%**		

COOLING TYPE : ☐ OA ☐ OA/FA ☒ OA/FA/FA ☐ OA/FOA

IMPEDANCE	H-X	H-Y	X-Y
Percent	**~7%**	**N/A**	**N/A**
MVA Base	**100**	**N/A**	**N/A**
Tested Taps	**TBD**	**TBD**	**N/A**
WINDING RESISTANCE	H	X	Y
Ohms	**TBD**	**N/A**	

CURRENT TRANSFORMER RATIOS

H **TBD** X **12,000:5** Y **N/A** N **TBD**

PERCENT EXCITING CURRENT 100 % Voltage: **TBD** 110% Voltage: **TBD**

Supply copy of nameplate and manufacture's test report when available LATER

APPENDIX F

SCE QUEUE PROJECTS IN THE NORTH OF LUGO AREA

North of Lugo (NOL) area Interconnection Projects		
Project ID	**Area of Interconnection**	**Project Size (MW)**
TOT 005	Victor 230	830
WDT 112	Casa Diablo	16.54
TOT 100	Mountain Pass 115	63
TOT 096	Mountain Pass 115	50.32
TOT 116	Control 115	10
WDT 164	Victor 115	80
TOT 121	Eldorado 230	599
TOT 127	Control 115	65
TOT 131	Pisgah 230	850
WDT 205	Black Mountain 115	99
TOT 150	Pisgah 230	60
TOT 160	Victor 230	570