Watson Cogeneration Company
22850 So. Wilmington Avenue
Carson, California 90749-6203

Thomas A. Lu
Executive Director

June 29, 2009

DOCKET	
09-AFC-1	
DATE	JUN 29 2009
RECD.	JUN 29 2009

Ms. Eileen Allen
Facility Siting Program Manager
California Energy Commission
1516 9th Street, MS15
Sacramento, CA 95814-5504

Dear Ms. Allen:

In accordance with the provisions of Title 20, California Code of Regulations, Watson Cogeneration Company hereby submits its Supplement in Response to CEC Data Adequacy Review of Application for Certification 09-AFC-01. This supplement was prepared in response to the California Energy Commission's Data Adequacy Recommendation dated April 17, 2009.

As an officer, I hereby attest under penalty of perjury that the contents of this application are truthful and accurate to the best of my knowledge.

Dated this 29th day of June 2009.

Thomas Lu
Executive Director
Watson Cogeneration Company

SUPPLEMENT

IN RESPONSE TO CEC DATA ADEQUACY REVIEW APPLICATION FOR CERTIFICATION (09-AFC-01)

for Watson Cogeneration Steam and Electric Reliability Project

Submitted to:
California Energy Commission
1516 9th Street , MS 15
Sacramento, CA 95814-5504

Submitted by:
Watson Cogeneration Company
22850 South Wilmington Avenue
Carson, CA 90745

With support from:
URS Corporation
8181 East Tufts Avenue
Denver, CO 80237

June 2009

TABLE OF CONTENTS

Data Adequacy Response to Comments Table

Appendices

Appendix A Air Quality

- South Coast Air Quality Management District Completeness Letter

Appendix B Biology

- Figure 5.6-1 (Revised), CNDDB Sensitive Species and Vicinity Map
- CDNDDB Full Report
- Table 5.6-1 (Revised), Special-Status Species with Low Potential to Occur in the Project Area
- Table B-1, Important Commercial Recreational Fisheries within Ten Miles of the Watson Cogeneration Facility
- Figure B-1, Project Site and Survey Area

Appendix C Land Use

- Figure C-1, Planned Land Use
- Figure 5.9-3 (Revised), Zoning

Appendix D Transmission System Design

- Figure D-1, 230 kV System Overall One-Line Diagram
- Figure D-2, Breaker Ratings
- Figure D-3, Electrical Overall One Line Diagram
- Figure D-4, Electrical One Line Diagram New 69 kV GIS Substation
- CAISO Interconnection Feasibility Study Agreement Request
- CAISO Interconnection Feasibility Study Executed Agreement
- CAISO Feasibility Study Payment
- Table F1 (Revised), Design and Construction LORS

Appendix E Visual Resources

- Table E-1, Cooling Tower Exhaust Flow Parameters
- Table E-2, HRSG Exhaust Flow Parameters

Appendix F Water Resources

- Figure 3-11 (Revised), Process Flow Diagram
- Table 3-2 (Revised), Process Flow Diagram Values
- Figure 3-13 (Revised), Water Balance Flow Diagram
- Figure 5.5-1 (Revised), Water Balance Flow Diagram
- Table 3-7 (Revised), Water Balance Flow Values

Adequacy Issue:	Adequate	Inadequate X	DATA ADEQUACY WORKSHEET		Revision No. 0	Date	April 17, 2009
Technical Area:	**Air Quality**		Project:	Watson Cogeneration Steam and Electric Reliability Project	Technical Staff:	Steve Radis	
Project Manager:	Alan Solomon		Docket:	09-AFC-01	Technical Senior:	Keith Golden	

COMMENT NUMBER	SITING REGULATIONS	INFORMATION	INFORMATION REQUIRED TO MAKE AFC CONFORM WITH REGULATIONS	RESPONSE
1a	Appendix B (g) (8) (A)	The information necessary for the air pollution control district where the project is located to complete a Determination of Compliance.	Please provide a completeness letter from the South Coast Air Quality Management District (SCAQMD).	The completeness letter from the South Coast Air Quality Management District (SCAQMD) is provided in Appendix A of this AFC Supplement.
1b	Appendix B (g) (8) (J) (ii)	Potential offset sources, including location, and quantity of emission reductions;	The AFC does not contain adequate information on VOC Emission Reduction Credits (ERCs), specifically identification of prospective VOC ERC sources and locations of those sources.	Applicant will submit under separate confidential cover a summary of its discussions with ERC emission brokers to date.

Adequacy Issue:	Adequate	Inadequate	X	DATA ADEQUACY WORKSHEET	Revision No.	0	Date	April 17, 2009
Technical Area:	**Biological Resources**			Project:	Watson Cogeneration Steam and Electric Reliability Project		Technical Staff:	Brian McCollough
Project Manager:	Alan Solomon			Docket:	09-AFC-1		Technical Senior:	Rick York

COMMENT NUMBER	SITING REGULATIONS	INFORMATION	INFORMATION REQUIRED TO MAKE AFC CONFORM WITH REGULATIONS	RESPONSE
2a	Appendix B (g) (13) (A)	A regional overview and discussion of terrestrial and aquatic biological resources, with particular attention to sensitive biological resources within ten (10) miles of the project. Include a map at a scale of 1:100,000 (or other suitable scale) showing sensitive biological resource location(s) in relation to the project site and related facilities and any boundaries of a local Habitat Conservation Plan or similar open space land use plan or designation. Sensitive biological resources include the following:	Please expand the review of sensitive biological resources to describe resources within ten (10) miles of the project. Please include a regional vicinity map that shows biological resources within ten (10) miles of the project.	Figure 5.6-1 (Revised) (located in Appendix B of this AFC Supplement) shows the vicinity map with sensitive biological resources within 10 miles of the Project. This figure, in addition to the associated CDNDDB "Full Report" and Table 5.6-1 (Revised) (also in Appendix B), include Federal, state, and other listed species (California Native Plant Society, etc.). Please note that the dates for some species are shown as "XXXX". The records for these findings are very old and/or only partial and the date was not known or recorded in the database.
2b	Appendix B (g) (13) (A) (i)	species listed under state or federal Endangered Species Acts;	Please include species listed under the state or federal Endangered Species Acts within ten (10) miles of the project.	The species listed under the state or Federal Endangered Species Acts within 10 miles of the Project are shown on Figure 5.6-1 (Revised) and listed in Table 5.6-1 (Revised) located in Appendix B of this AFC Supplement.
2c	Appendix B (g) (13) (A) (ii)	resources defined in sections 1702(q) and (v) of Title 20 of the California Code of Regulations;	Please include areas of critical and special concern within ten (10) miles of the project.	Areas of critical and special concern within 10 miles of the Project are shown on Figure 5.6-1 (Revised) located in Appendix B of this AFC Supplement.

COMMENT NUMBER	SITING REGULATIONS	INFORMATION	INFORMATION REQUIRED TO MAKE AFC CONFORM WITH REGULATIONS	RESPONSE
2d	Appendix B (g) (13) (A) (iii)	species identified as state Fully Protected;	Please include fully protected species within ten (10) miles of the project.	Species listed under the state or Federal Endangered Species Acts within 10 miles of the Project are shown on Figure 5.6-1 (Revised) and listed in Table 5.6-1 (Revised) located in Appendix B of this AFC Supplement.
2e	Appendix B (g) (13) (A) (iv)	species covered by Migratory Bird Treaty Act;	Please include Migratory Bird Act species within ten (10) miles of the project.	Species listed under the state or Federal Endangered Species Acts within 10 miles of the Project are shown on Figure 5.6-1 (Revised) and listed in Table 5.6-1 (Revised) located in Appendix B of this AFC Supplement.
2f	Appendix B (g) (13) (A) (v)	species and habitats identified by local, state, and federal agencies as needing protection, including but not limited to those identified by the California Natural Diversity Database, or where applicable, in Local Coastal Programs or in relevant decisions of the California Coastal Commission; and	Please include species and habitats identified in the California Natural Diversity Database within a radius of ten (10) miles of the project.	Species and habitats identified in the CNDDB within a radius of 10 miles of the Project are shown on Figure 5.6-1 (Revised) and listed in Table 5.6-1 (Revised) located in Appendix B of this AFC Supplement.

Adequacy Issue:	Adequate	Inadequate	X	DATA ADEQUACY WORKSHEET	Revision No.	0	Date April 17, 2009
Technical Area:	**Biological Resources**			Project: Watson Cogeneration Steam and Electric Reliability Project	Technical Staff:		Brian McCollough
Project Manager:	Alan Solomon			Docket: 09-AFC-1	Technical Senior:		Rick York

COMMENT NUMBER	SITING REGULATIONS	INFORMATION	INFORMATION REQUIRED TO MAKE AFC CONFORM WITH REGULATIONS	RESPONSE
2g	Appendix B (g) (13) (A) (vi)	Fish and wildlife species that have commercial and/or recreational value.	Please include fish and wildlife of commercial or recreational value within ten (10) miles of the project.	Fish and wildlife of commercial or recreational value within 10 miles of the Project are shown on Figure 5.6-1 (Revised) and listed in new Table B-1 (in Appendix B of this AFC Supplement). The near shore environs of the Pacific Ocean also occur within a 10-mile radius from the Project Site. A list of commercially and recreationally important fish species have the potential to occur within this area. A listing of these species is included in Table B-1. Neither Project construction nor Project operation will impact the near shore environs of the Pacific Ocean. No disturbance to the near shore environs will occur and discharges to the Dominguez Channel, which may subsequently enter the Pacific Ocean, are not planned either during construction or operation of the Project. Consequently, there is little to no potential for impacts to aquatic species in the Pacific Ocean to occur.

Adequacy Issue:	Adequate	Inadequate	X	DATA ADEQUACY WORKSHEET	Revision No.	0	Date April 17, 2009
Technical Area:	**Biological Resources**			Project: Watson Cogeneration Steam and Electric Reliability Project	Technical Staff:		Brian McCollough
Project Manager:	Alan Solomon			Docket: 09-AFC-1	Technical Senior:		Rick York

COMMENT NUMBER	SITING REGULATIONS	INFORMATION	INFORMATION REQUIRED TO MAKE AFC CONFORM WITH REGULATIONS	RESPONSE
2h	Appendix B (g) (13) (B) (i)	Detailed maps at a scale of 1:6,000 or color aerial photographs taken at a recommended scale of 1 inch equals 500 feet (1:6,000) with a 30 percent overlap that show the proposed project site and related facilities, biological resources including, but not limited to, those found during project-related field surveys and in records from the California Natural Diversity Database, and the associated areas where biological surveys were conducted. Label the biological resources and survey areas as well as the project facilities;	Please include a detailed map at a scale of 1:6,000 that shows the project site and biological resources, including those found during surveys and in records from the California Natural Diversity Database.	New Figure B-1 (in Appendix B of this AFC Supplement) shows a detailed map of the Project Site and survey area at a scale of 1:6,000. No biological resources were identified in the area.

Adequacy Issue:	Adequate	Inadequate	X	DATA ADEQUACY WORKSHEET	Revision No.	0	Date April 17, 2009
Technical Area:	**Biological Resources**			Project: Watson Cogeneration Steam and Electric Reliability Project	Technical Staff:		Brian McCollough
Project Manager:	Alan Solomon			Docket: 09-AFC-1	Technical Senior:		Rick York

COMMENT NUMBER	SITING REGULATIONS	INFORMATION	INFORMATION REQUIRED TO MAKE AFC CONFORM WITH REGULATIONS	RESPONSE
2i	Appendix B (g) (13) (D)	A description and results of all field studies and seasonal surveys used to provide biological baseline information about the project site and associated facilities. Include copies of the California Natural Diversity Database records and field survey forms completed by the applicant's biologist(s). Identify the date(s) the surveys were completed, methods used to complete the surveys, and the name(s) and qualifications of the biologists conducting the surveys. Include:	Please include copies of the CNDDB records and field survey forms completed for this project.	Given the nature of the habitat surrounding the Watson Cogeneration Facility, specialized field survey forms were not utilized as there are no survey forms required to be completed. No sensitive or listed plants, wildlife, or habitats were observed; therefore no CNDDB field survey forms were completed.

Adequacy Issue:	Adequate	Inadequate	X	DATA ADEQUACY WORKSHEET	Revision No.	0	Date April 17, 2009
Technical Area:	**Biological Resources**			Project: Watson Cogeneration Steam and Electric Reliability Project	Technical Staff:		Brian McCollough
Project Manager:	Alan Solomon			Docket: 09-AFC-1	Technical Senior:		Rick York

COMMENT NUMBER	SITING REGULATIONS	INFORMATION	INFORMATION REQUIRED TO MAKE AFC CONFORM WITH REGULATIONS	RESPONSE
2j	Appendix B (g) (13) (F) (i)	All measures proposed to avoid and/or reduce adverse impacts to biological resources;	Please include mitigation measures that will be implemented if the bat species that may use the maintenance building currently are found during the pre-disturbance project site survey.	Prior to demolition or renovation of any abandoned building a survey(s) shall be conducted during the same period by a qualified biologist. If bat species are identified within the shop/warehouse during pre-disturbance surveys, the bats will be allowed to leave the building to feed in the evening as typical. Any openings that may be utilized by bats to reenter the building will be blocked off by implementing appropriate exclusion devices. If this is not feasible or if individuals remain inside the building, the bats will be removed by setting mist nests within the building and removing the bats as they are caught in the nets. No disturbance will take place until the bats have been completely removed from the building. It is unlikely that the number of bats found to be present would constitute a nesting colony. If significant numbers of bats are found to be present, additional mitigation for displacing the colony will be implemented. [Applicant response is continued on the next page.]

COMMENT NUMBER	SITING REGULATIONS	INFORMATION	INFORMATION REQUIRED TO MAKE AFC CONFORM WITH REGULATIONS	RESPONSE
2j, continued	Appendix B (g) (13) (F) (i)	All measures proposed to avoid and/or reduce adverse impacts to biological resources;	Please include mitigation measures that will be implemented if the bat species that may use the maintenance building currently are found during the pre-disturbance project site survey.	[Continued from previous page.] If Townsend's western big-eared bat, a California Species of Special Concern, is found during an August – October survey, appropriate exclusion devices approved by California Department of Fish and Game (CDFG) and the United States Fish and Wildlife Survey (USFWS) shall be installed by a qualified bat biologist. Once the bats have been excluded, demolition may occur. If Townsend's western big-eared bats are found during a February – May survey, demolition shall not take place until the end of the nursing season in August. Exclusion devices shall be placed by a qualified bat biologist in accordance with CDFG and USFWS. (1997 WLUP FEIR Measure H-2). If no Townsend's western big-eared bats are found during the survey(s), no additional avoidance measures are required.

Adequacy Issue:	Adequate	Inadequate	X	DATA ADEQUACY WORKSHEET	Revision No.	0	Date April 17, 2009
Technical Area:	**Land Use**			Project: Watson Cogeneration Steam and Electric Reliability Project	Technical Staff:		Bob Fiore
Project Manager:	Alan Solomon			Docket: 09-AFC-1	Technical Senior:		Paula David

COMMENT NUMBER	SITING REGULATIONS	INFORMATION	INFORMATION REQUIRED TO MAKE AFC CONFORM WITH REGULATIONS	RESPONSE
3	Appendix B (g) (3) (A) (iv)	Legible maps of the areas identified in subsection (g)(3)(A) potentially affected by the project, on which existing land uses, jurisdictional boundaries, general plan designations, specific plan designations, and zoning have been clearly delineated.	Please provide a legible map with general plan designations for the areas potentially affected by the project.	A new figure (Figure C-1) has been provided in Appendix C of this AFC Supplement to present planned land use. As a result of the new figure, the title of the original AFC Figure 5.9-3 has been changed from “Zoning and Planned Land Use” to “Zoning” and is presented as Figure 5.9-3 (Revised) in Appendix C of this AFC Supplement.

Adequacy Issue:	Adequate	Inadequate	X	DATA ADEQUACY WORKSHEET	Revision No.	0	Date April 17, 2009
Technical Area:	**Reliability**			Project: Watson Cogeneration Steam and Electric Reliability Project	Technical Staff:		Erin Bright
Project Manager:	Alan Solomon			Docket: 09-AFC-1	Technical Senior:		Steve Baker

COMMENT NUMBER	SITING REGULATIONS	INFORMATION	INFORMATION REQUIRED TO MAKE AFC CONFORM WITH REGULATIONS	RESPONSE
4	Appendix B (h) (3) (B) (i)	Expected overall availability factor, and annual and lifetime capacity factors;	Expected annual and lifetime capacity factors.	The Project is expected to achieve annual and lifetime capacity factors of greater than 95 percent.

Adequacy Issue:	Adequate	Inadequate	X	DATA ADEQUACY WORKSHEET	Revision No.	0	Date	April 17, 2009
Technical Area:	**Socioeconomics**			Project: Watson Cogeneration Steam and Electric Reliability Project	Technical Staff:		Joseph Diamond, Ph.D.	
Project Manager:	Alan Solomon			Docket: 09-AFC-1	Technical Senior:		Paula David	

COMMENT NUMBER	SITING REGULATIONS	INFORMATION	INFORMATION REQUIRED TO MAKE AFC CONFORM WITH REGULATIONS	RESPONSE
5	Appendix B (g) (7) (B) (iii)	An estimate of the potential population increase caused directly and indirectly by the project;	Please provide an estimate of the potential population increase caused indirectly by the project.	Project construction could result in the addition of two households to the local community, as a worst-case scenario (please see discussion in Section 5.10.2.3 of the AFC). After construction has ended, if these two households remain in the Project area, the additional population of six[(1)] would represent a permanent increase in Project area population. No new population is expected due to Project operation, because no new employees would be required for project operation. The Project would not include or be related to any new housing or other components that would attract new residents. [Continued to next page.]

COMMENT NUMBER	SITING REGULATIONS	INFORMATION	INFORMATION REQUIRED TO MAKE AFC CONFORM WITH REGULATIONS	RESPONSE
5, continued	Appendix B (g) (7) (B) (iii)	An estimate of the potential population increase caused directly and indirectly by the project;	Please provide an estimate of the potential population increase caused indirectly by the project.	[Continued from previous page.] Similarly, indirect economic benefits of Project operation would include an estimated 0.5 additional job (see Section 5.10.2.2 of the AFC). This additional employment position would likely be filled by the large available labor force in the Project area. Assuming as a worst-case scenario that this position is filled by a non-local employee moving into the area, up to three(3) residents (one household) could be new to the area. In total, the potential population increase resulting indirectly from Project construction and operation would be approximately 26 people, representing a less than significant impact upon existing Project area population. Notes: (1), (2), and (3) Households multiplied by average number of persons per household equals estimated population. The average number of persons per household (3.04 persons per household) is estimated by dividing the 2008 Los Angeles County population (10,363,850) by the 2008 Los Angeles County number of housing units (3,403,480) (see Tables 5.10-7 and 5.10-8 in the AFC).

Adequacy Issue:	Adequate	Inadequate	X	DATA ADEQUACY WORKSHEET	Revision No.	0	Date April 17, 2009
Technical Area:	**Traffic and Transportation**			Project: Watson Cogeneration Steam and Electric Reliability Project	Technical Staff:		David Flores
Project Manager:	Alan Solomon			Docket: 09-AFC-1	Technical Senior:		Paula David

COMMENT NUMBER	SITING REGULATIONS	INFORMATION	INFORMATION REQUIRED TO MAKE AFC CONFORM WITH REGULATIONS	RESPONSE
6	Appendix B (g) (5) (B)	If the proposed project including any linear facility is to be located within 20,000 feet of an airport runway that is at least 3,200 feet in actual length, or 5,000 feet of a heliport (or planned or proposed airport runway or an airport runway under construction, that is the subject of a notice or proposal on file with the Federal Aviation Administration), discuss the project's compliance with the applicable sections of the current Federal Aviation Regulation Part 77 – Objects Affecting Navigable Airspace, specifically any potential to obstruct or impede air navigation generated by the project at operation; such as, a thermal plume, a visible water vapor plume, glare, electrical interference, or surface structure height. [Continued to next page.]	Please provide a discussion as to whether the Goodyear Blimp Base on South Main Street near the intersection of the San Diego Freeway and Interstate 405 requires FAA review. The Blimp Base is approximately 20,000 feet from the project site and may require FAA review.	Approximately 3 miles to the northwest of the Project Site, an existing Goodyear airship facility is located near the northeast quadrant of Main Street and I-405 Freeway. **Title 14, Code of Federal Regulations, Section 77.13(2)(i)** Requires an applicant to notify the Federal Aviation Administration (FAA) of construction of structures with a height greater than 200 feet from grade or greater than an imaginary surface extending outward and upward at a slope of 10 to 1 from the nearest point of the nearest runway of an airport with at least one runway more than 3,200 feet in length. The administering agency for the above regulation is the FAA. [Continued to next page.]

COMMENT NUMBER	SITING REGULATIONS	INFORMATION	INFORMATION REQUIRED TO MAKE AFC CONFORM WITH REGULATIONS	RESPONSE
6	Appendix B (g) (5) (B)	[Continued from previous page.] The discussion should include a map at a scale of 1:24,000 that displays the airport or airstrip runway configuration, the proposed power plant site and related facilities.	Please provide a discussion as to whether the Goodyear Blimp Base on South Main Street near the intersection of the San Diego Freeway and Interstate 405 requires FAA review. The Blimp Base is approximately 20,000 feet from the project site and may require FAA review.	[Continued from previous page.] The Goodyear airship base does not have a runway at least 3,200 feet in length and the Project height would not exceed 200 feet from grade. Therefore, notification to the FAA would not be required. In addition, the existing generating units (trains) onsite and adjacent to the Project have historically posed no constraints to the Goodyear airport facility operations. Based on these existing physical features, it can be concluded that the Project would not create any new constraints to existing and future air traffic patterns.

COMMENT NUMBER	SITING REGULATIONS	INFORMATION	INFORMATION REQUIRED TO MAKE AFC CONFORM WITH REGULATIONS	RESPONSE
7a	Appendix B (b) (2) (C)	A detailed description of the design, construction, and operation of any electric transmission facilities, such as power lines, substations, switchyards, or other transmission equipment, which will be constructed or modified to transmit electrical power from the proposed power plant to the load centers to be served by the facility. Such description shall include the width of rights of way and the physical and electrical characteristics of electrical transmission facilities such as towers, conductors, and insulators.	1. Provide a one-line diagram for the existing 230kV GIS switchyard after interconnection of the project. Show proposed bay arrangement of the equipments with ratings such as breakers, disconnect switches and relays, etc. which are required to interconnect the project. 2. Resubmit Figure 3-12 (Electrical One Line Diagram) with the breaker ratings, disconnect switches and relay details of the proposed new 69kV GIS substation. [Continued on next page]	1. The 230kV GIS switchyard is owned by SCE, not by the Applicant. A point of contact for SCE was provided to the CEC at the CEC's request. For the 230kV system, Figure D-1 (230V System Overall One-Line Diagram), Figure D-2 (Breaker Ratings) and the following ownership description are provided as reference. The SCE switchyard is the outdoor 230kV interconnection between the overhead lines and the gas insulated substation. This transition contains a dead end structure, line disconnects and grounds, PT's and CT's, wave traps and the bushings for connection of the gas insulated bus to un-insulated conductor. All line protective relaying is also part of the SCE switchyard, yet they are housed in the building. The point of connection of the gas insulated bus to the un-insulated conductor is the dividing point between Watson and SCE. The Watson substation, consists of the circuit breaker, associated disconnect and ground switches and all protective relaying for the loads. The substation is housed in a metal building. [Continued on next page]

COMMENT NUMBER	SITING REGULATIONS	INFORMATION	INFORMATION REQUIRED TO MAKE AFC CONFORM WITH REGULATIONS	RESPONSE
7a	Appendix B (b) (2) (C)	A detailed description of the design, construction, and operation of any electric transmission facilities, such as power lines, substations, switchyards, or other transmission equipment, which will be constructed or modified to transmit electrical power from the proposed power plant to the load centers to be served by the facility. Such description shall include the width of rights of way and the physical and electrical characteristics of electrical transmission facilities such as towers, conductors, and insulators.	[Continued from previous page] 3. Provide length, type, and current carrying capacity of the short overhead conductor which tie the 69kV transformer to the 69kV GIS substation. 4. Provide a detail drawing of the existing 230kV lattice steel tower configuration which utilized to interconnect the project to the SCE Hinson substation.	[Continued from previous page] 2. Figure 3-12 has been split into two figures (Figures D-3 and D-4), which are attached in Appendix D of this AFC Supplement. These figures provide the requested information. 3. The requested information for the new 69KV GIS substation is presented in Figure D-2 in Appendix D of this AFC Supplement. There will be no overhead transmission lines associated with this Project. All connections will be via underground cables. 4. The existing 230kV lattice steel tower configuration is owned by SCE, not by the Applicant. A point of contact for SCE was provided to the CEC at the CEC's request.

Adequacy Issue:	Adequate	Inadequate	X	DATA ADEQUACY WORKSHEET	Revision No.	0	Date April 17, 2009
Technical Area:	**Transmission System Design**	Project:	Watson Cogeneration Steam and Electric Reliability Project		Technical Staff:		Sudath Arachchige
Project Manager:	Alan Solomon	Docket:	09-AFC-1		Technical Senior:		Mark Hesters

COMMENT NUMBER	SITING REGULATIONS	INFORMATION	INFORMATION REQUIRED TO MAKE AFC CONFORM WITH REGULATIONS	RESPONSE
7b	Appendix B (b) (2) (E)	A completed System Impact Study or signed System Impact Study Agreement with the California Independent System Operator and proof of payment. When not connecting to the California Independent System Operator controlled grid, provide the executed System Impact Study agreement and proof of payment to the interconnecting utility. If the interconnection and operation of the proposed project will likely impact an transmission system that is not controlled by the interconnecting utility (or California Independent System Operator), provide evidence of a System Impact Study or agreement and proof of payment (when applicable) with/to the impacted transmission owner or provide evidence that there are no system impacts requiring mitigation.	A completed System Impact Study or signed System Impact Study Agreement with the California Independent System Operator and proof of payment. When not connecting to the California Independent System Operator controlled grid, provide the executed System Impact Study agreement and proof of payment to the interconnecting utility.	The Large Generator Interconnection Study Process Agreement between Watson Cogeneration Company and California Independent System Operator and the proof of payment are located in Appendix D of this AFC Supplement.

COMMENT NUMBER	SITING REGULATIONS	INFORMATION	INFORMATION REQUIRED TO MAKE AFC CONFORM WITH REGULATIONS	RESPONSE
7c	Appendix B (i) (1) (A)	Tables which identify laws, regulations, ordinances, standards, adopted local, regional, state, and federal land use plans, leases, and permits applicable to the proposed project, and a discussion of the applicability of, and conformance with each. The table or matrix shall explicitly reference pages in the application wherein conformance, with each law or standard during both construction and operation of the facility is discussed; and	Appendix F Table F1 to F4 CPUC G.O. 95 "Rules for overhead Electric Line construction" need to be discussed.	Table F1 (Revised), has been updated to include CPUC G.O. 95. It is attached in Appendix D of this AFC Supplement. There will be no overhead transmission lines associated with this Project. All connections will be via underground cables.

Adequacy Issue:	Adequate ___	Inadequate X	DATA ADEQUACY WORKSHEET		Revision No. 0	Date	April 17, 2009
Technical Area:	**Visual Resources**	Project:	Watson Cogeneration Steam and Electric Reliability Project		Technical Staff:	James Adams	
Project Manager:	Alan Solomon	Docket:	09-AFC-1		Technical Senior:	Paula David	

COMMENT NUMBER	SITING REGULATIONS	INFORMATION	INFORMATION REQUIRED TO MAKE AFC CONFORM WITH REGULATIONS	RESPONSE
8	Appendix B (g) (6) (E)	Provide the cooling tower and heat recovery steam generator (HRSG) exhaust design parameters that affect visible plume formation. For the cooling tower, data shall include heat rejection rate, exhaust temperature, exhaust mass flow rate, liquid to gas mass flow ratio, and, if the tower is plume-abated, moisture content (percent by weight) or plume-abated fogging curve(s). The parameters shall account for a range of ambient conditions (temperature and relative humidity) and proposed operating scenarios, such as duct firing and shutting down individual cells. For the heat recovery steam generator exhausts, data shall include moisture content (percent by weight), exhaust mass flow rate, and exhaust temperature. The parameters must correspond to full-load operating conditions at specified ambient conditions, and shall account for proposed operating scenarios, such as power augmentation (i.e., evaporative coolers, inlet foggers, or steam injection) and duct firing, or proposed HRSG visible plume abatement, such as the use of an economizer bypass. For simple-cycle projects, provide analogous data for the exhaust stack(s).	For the cooling tower, please provide data including heat rejection rate, exhaust temperature, exhaust mass flow rate, liquid to gas mass flow ratio, and, if the tower is plume-abated, moisture content (percent by weight) or plume-abated fogging curve(s). The parameters shall account for a range of ambient conditions (temperature and relative humidity) and proposed operating scenarios, such as duct firing and shutting down individual cells. For the heat recovery steam generator exhausts, data shall include moisture content (percent by weight), exhaust mass flow rate, and exhaust temperature. The parameters must correspond to full-load operating conditions at specified ambient conditions, and shall account for proposed operating scenarios, such as power augmentation (i.e., evaporative coolers, inlet foggers, or steam injection) and duct firing, or proposed HRSG visible plume abatement, such as the use of an economizer bypass.	Cooling tower exhaust flow parameters for the two additional cells are shown in Table E-1 in Appendix E of this AFC Supplement and include information on heat rejection rate, exhaust temperature, exhaust mass flow rate, liquid to gas mass flow ratio. The tower is not plume-abated. HRSG parameters are presented in Table E-2 in Appendix E and show operating values for the HRSG Exhaust Flow Parameters including moisture content (percent by weight), exhaust mass flow rate, and exhaust temperature. There is no plume abatement for the HRSG. The maximum moisture content is 7.15 percent, which results in a water dew point temperature of approximately 120°F. A vapor plume is not likely to be visible with the stack gas temperatures in the range from 359°F to 381°F. All cases are at maximum combustion turbine (CT) loads, three Duct Burner operating scenarios (zero, minimum, and maximum duct firing) for each of the four ambient temperature cases. Operating conditions for the 12 cases are shown in Table 3-2 (Revised) in Appendix F of this AFC Supplement.

Adequacy Issue:	Adequate	Inadequate	X	DATA ADEQUACY WORKSHEET	Revision No.	0	Date April 17, 2009
Technical Area:	**Water Resources**			Project: Watson Cogeneration Steam and Electric Reliability Project	Technical Staff:		Christopher Dennis
Project Manager:	Alan Solomon			Docket: 09-AFC-01	Technical Senior:		Paul Marshall

COMMENT NUMBER	SITING REGULATIONS	INFORMATION	INFORMATION REQUIRED TO MAKE AFC CONFORM WITH REGULATIONS	RESPONSE
9a	Appendix B (g) (14) (A) (iii)	Nationwide Permits and/or Section 404 Permits from the U.S. Army Corps of Engineers; and	Please state why nationwide and/or Section 404 permits do not apply to the proposed project.	Nationwide and Section 404 permits do not apply to the Project because the improvements will be located at the existing Watson Cogeneration Facility and there will be no encroachments on Waters of the United States.

COMMENT NUMBER	SITING REGULATIONS	INFORMATION	INFORMATION REQUIRED TO MAKE AFC CONFORM WITH REGULATIONS	RESPONSE
9b	Appendix B (g) (14) (C) (vii)	Provide water mass balance and heat balance diagrams for both average and maximum flows that include all process and/or ancillary water supplies and wastewater streams. Highlight any water conservation measures on the diagram and the amount that they reduce water demand; and	Heat balance diagrams were not provided. These are needed for both average and maximum flows. Also, the water flow diagrams need to be revised to include both average and maximum flows. Water conservation measures need to be highlighted on these diagrams.	Section 3.4.5 in the AFC stated that the "inputs and outputs corresponding to this process flow diagram are presented in Table 3-2..." To clarify the information, the heat balance diagram [Figure 3-11 (Revised) in Appendix F of this AFC Supplement] has been revised to present labels on the various process streams that cross-reference to Table 3-2 (Revised) (also in Appendix F of this AFC Supplement). Average values and maximum values for cases with and without duct firing have been added to Table 3-2 (Revised). The primary water conservation measure will be the use of reclaimed wastewater that would otherwise be discharged to the ocean. In addition, this water supply is further conserved by reuse of internal waste streams for cooling tower makeup. The water balance diagram has been revised to clarify water conservation measures by highlighting in green the reclaimed water supply and the reuse of internal wastewater streams. The diagram is presented as Figures 3-13 (Revised) and 5.5-1 (Revised) in Appendix F of this AFC Supplement. They are identical figures that originally appeared in the AFC Project Description and Water Resources sections, respectively. The streams have been lettered to correlate with Table 3-7 (Revised). This revised table includes the addition of rows that quantify the internal recycling of water.

Adequacy Issue:	Adequate	Inadequate	X	DATA ADEQUACY WORKSHEET	Revision No.	0	Date April 17, 2009
Technical Area:	**Water Resources**			Project: Watson Cogeneration Steam and Electric Reliability Project	Technical Staff:		Christopher Dennis
Project Manager:	Alan Solomon			Docket: 09-AFC-01	Technical Senior:		Paul Marshall

COMMENT NUMBER	SITING REGULATIONS	INFORMATION	INFORMATION REQUIRED TO MAKE AFC CONFORM WITH REGULATIONS	RESPONSE
9c	Appendix B (i) (3)	A schedule indicating when permits outside the authority of the commission will be obtained and the steps the applicant has taken or plans to take to obtain such permits.	Please provide a schedule identifying all permits that would be required for the project that are outside of the authority of the Energy Commission. The schedule must also identify when the permits will be obtained and what steps have been or will be taken to obtain the required permits.	The Watson Cogeneration Project is an expansion of an existing facility and will continue to operate under existing water permits without modification.

Appendix A
Air Quality

South Coast Air Quality Management District Completeness Letter

South Coast
Air Quality Management District
21865 Copley Drive, Diamond Bar, CA 91765-4178
(909) 396-2000 • www.aqmd.gov

June 19, 2009

John Shao
Environmental Engineer
BP West Coast Products LLC
P.O. Box 6210
Carson, CA 90749-6210

Subject: Watson Cogeneration Steam and Reliability Project, Application Numbers 496922, 496924, and 496925

Dear Mr. Shao:

Thank you for filing the subject applications with the South Coast Air Quality Management District. These applications, along with the additional information submitted in your letters dated June 11 and 12, 2009, are found to have sufficient information for the District to initiate permit processing and are thus "deemed complete." This, however, does not imply that the applications have been approved for Permits to Construct. Additional clarifying data may still be needed as we proceed with our evaluation of the applications.

Please feel free to contact me at (909) 396-3611, or at rbeshai@aqmd.gov, with any questions or comments regarding these applications.

Sincerely,

Rafik Beshai
Air Quality Engineer
Refinery & Waste Management Permitting

cc: Jay Chen, AQMD

Appendix B
Biological Resources

Figure 5.6-1 (Revised)

CNDDB Sensitive Species and Vicinity Map

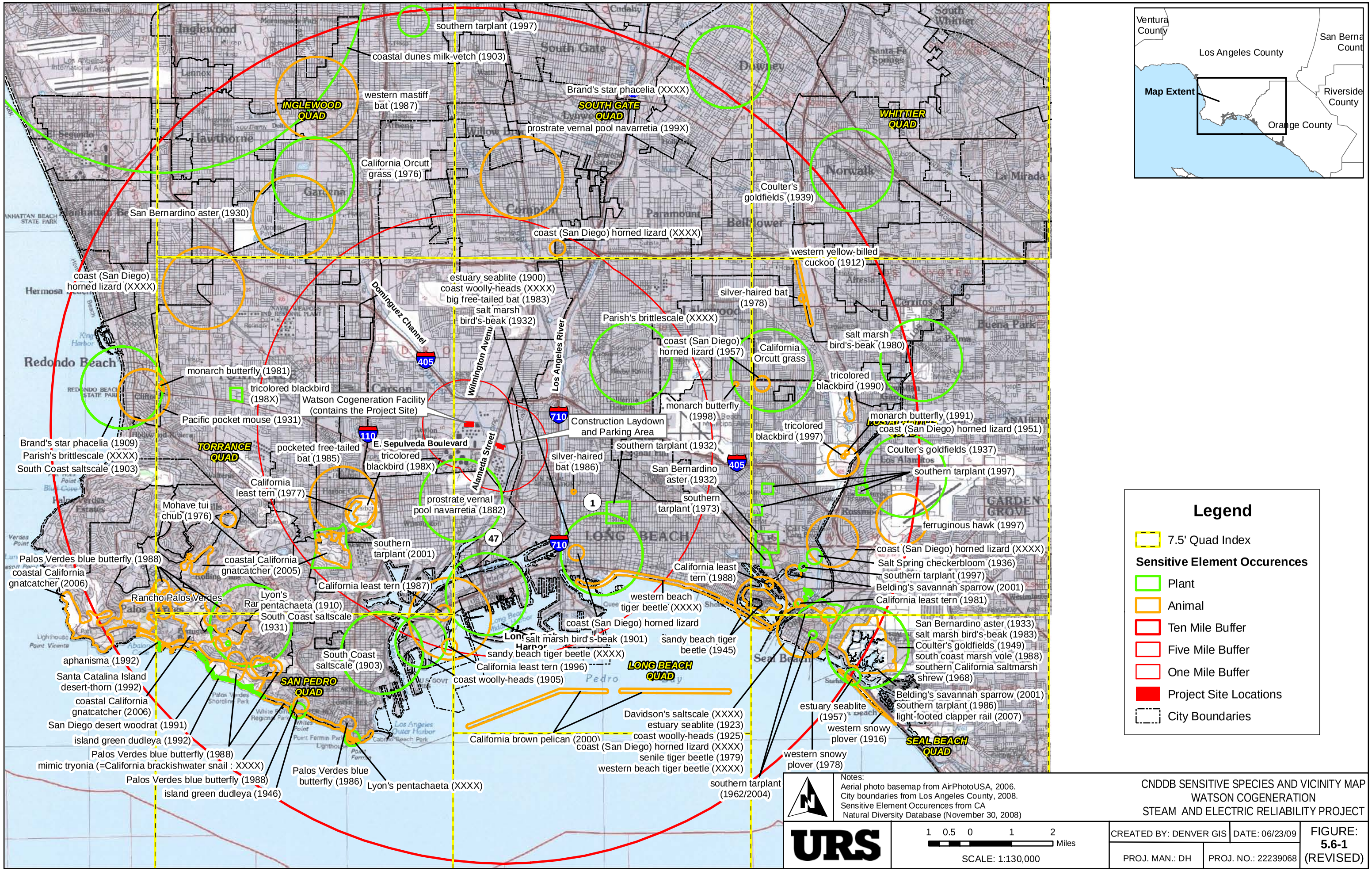

Path: Y:\GIS\Projects\BP_Carson_Cogen\mxds\fig5-6-1_CNDDB_Species.mxd

CDNDDB Full Report

Actinemys marmorata pallida

southwestern pond turtle

Element Code: ARAAD02032

Status		NDDB Element Ranks		Other Lists	
Federal:	None	**Global:**	G3G4T2T	**CDFG Status:**	SC
State:	None	**State:**	3Q S2		

Habitat Associations

General: INHABITS PERMANENT OR NEARLY PERMANENT BODIES OF WATER IN MANY HABITAT TYPES; BELOW 6000 FT ELEV.

Micro: REQUIRE BASKING SITES SUCH AS PARTIALLY SUBMERGED LOGS, VEGETATION MATS, OR OPEN MUD BANKS. NEED SUITABLE NESTING SITES.

* SENSITIVE *

Occurrence No. 29 **Map Index:** 02267 **EO Index:** 655

Occ Rank: None
Origin: Natural/Native occurrence
Presence: Possibly Extirpated
Trend: Unknown

Dates Last Seen
Element: XXXX-XX-XX
Site: 1987-XX-XX

Record Last Updated: 1996-03-04

Quad Summary: Los Alamitos (3311871/089D)
County Summary: Orange, Los Angeles

* SENSITIVE *

Lat/Long:
UTM:
Mapping Precision:
Symbol Type:
Radius:

Township:
Range:
Section: **Qtr:**
Meridian:
Elevation:

Location: *SENSITIVE* Location information suppressed.

Location Detail: Please contact the California Natural Diversity Database, California Department of Fish and Game, for more information:
(916) 324-3812.

Ecological:
Threat:
General:
Owner/Manager:

Actinemys marmorata pallida

southwestern pond turtle

Element Code: ARAAD02032

Status	NDDB Element Ranks	Other Lists
Federal: None	**Global:** G3G4T2T	**CDFG Status:** SC
State: None	**State:** 3Q	
	S2	

Habitat Associations

General: INHABITS PERMANENT OR NEARLY PERMANENT BODIES OF WATER IN MANY HABITAT TYPES; BELOW 6000 FT ELEV.

Micro: REQUIRE BASKING SITES SUCH AS PARTIALLY SUBMERGED LOGS, VEGETATION MATS, OR OPEN MUD BANKS. NEED SUITABLE NESTING SITES.

* SENSITIVE *

Occurrence No. 232 **Map Index:** 32726 **EO Index:** 1186

Occ Rank: Unknown
Origin: Natural/Native occurrence
Presence: Presumed Extant
Trend: Unknown

Dates Last Seen
Element: 198X-XX-XX
Site: 198X-XX-XX

Record Last Updated: 1995-11-13

Quad Summary: Los Alamitos (3311871/089D)
County Summary: Los Angeles, Orange

* SENSITIVE *

Lat/Long:
UTM:
Mapping Precision:
Symbol Type:
Radius:

Township:
Range:
Section: **Qtr:**
Meridian:
Elevation:

Location: *SENSITIVE* Location information suppressed.

Location Detail: Please contact the California Natural Diversity Database, California Department of Fish and Game, for more information:
(916) 324-3812.

Ecological:
Threat:
General:
Owner/Manager:

Actinemys marmorata pallida

southwestern pond turtle

Element Code: ARAAD02032

Status	NDDB Element Ranks	Other Lists
Federal: None	**Global:** G3G4T2T	**CDFG Status:** SC
State: None	**State:** 3Q	
	S2	

Habitat Associations

General: INHABITS PERMANENT OR NEARLY PERMANENT BODIES OF WATER IN MANY HABITAT TYPES; BELOW 6000 FT ELEV.

Micro: REQUIRE BASKING SITES SUCH AS PARTIALLY SUBMERGED LOGS, VEGETATION MATS, OR OPEN MUD BANKS. NEED SUITABLE NESTING SITES.

* SENSITIVE *

Occurrence No. 233 **Map Index:** 32727 **EO Index:** 987

Occ Rank: Unknown
Origin: Natural/Native occurrence
Presence: Presumed Extant
Trend: Unknown

Dates Last Seen
Element: 198X-XX-XX
Site: 198X-XX-XX

Record Last Updated: 1995-11-13

Quad Summary: Los Alamitos (3311871/089D)
County Summary: Orange, Los Angeles

* SENSITIVE *

Lat/Long:
UTM:
Mapping Precision:
Symbol Type:
Radius:

Township:
Range:
Section: **Qtr:**
Meridian:
Elevation:

Location: *SENSITIVE* Location information suppressed.

Location Detail: Please contact the California Natural Diversity Database, California Department of Fish and Game, for more information:
(916) 324-3812.

Ecological:
Threat:
General:
Owner/Manager:

Agelaius tricolor

tricolored blackbird

Element Code: ABPBXB0020

Status	NDDB Element Ranks	Other Lists
Federal: None	**Global:** G2G3	**CDFG Status:** SC
State: None	**State:** S2	

Habitat Associations

General: HIGHLY COLONIAL SPECIES, MOST NUMBEROUS IN CENTRAL VALLEY & VICINITY. LARGELY ENDEMIC TO CALIFORNIA.

Micro: REQUIRES OPEN WATER, PROTECTED NESTING SUBSTRATE, & FORAGING AREA WITH INSECT PREY WITHIN A FEW KM OF THE COLONY.

Occurrence No. 275 **Map Index:** 24342 **EO Index:** 6521

Occ Rank: Unknown
Origin: Natural/Native occurrence
Presence: Presumed Extant
Trend: Unknown

Dates Last Seen
Element: 198X-XX-XX
Site: 198X-XX-XX

Record Last Updated: 1993-10-07

Quad Summary: Torrance (3311873/090D)
County Summary: Los Angeles

Lat/Long: 33.78603º / -118.28988º
UTM: Zone-11 N3739179 E380580
Mapping Precision: NON-SPECIFIC
Symbol Type: POINT
Radius: 2/5 mile

Township: 04S
Range: 13W
Section: XX **Qtr:** XX
Meridian: S
Elevation: 20 ft

Location: HARBOR LAKE, IN THE SAN PEDRO AREA OF LOS ANGELES.
Location Detail:
Ecological: NESTING SUBSTRATE IS REEDS.
Threat:
General: SUCCESSFUL NESTING INDICATED BY THE PRESENCE OF FLEDGED YOUNG JUST OUT OF THE NEST.
Owner/Manager: UNKNOWN

Agelaius tricolor

tricolored blackbird

Element Code: ABPBXB0020

Status	NDDB Element Ranks	Other Lists
Federal: None	**Global:** G2G3	**CDFG Status:** SC
State: None	**State:** S2	

Habitat Associations

General: HIGHLY COLONIAL SPECIES, MOST NUMBEROUS IN CENTRAL VALLEY & VICINITY. LARGELY ENDEMIC TO CALIFORNIA.

Micro: REQUIRES OPEN WATER, PROTECTED NESTING SUBSTRATE, & FORAGING AREA WITH INSECT PREY WITHIN A FEW KM OF THE COLONY.

Occurrence No. 276 **Map Index:** 24340 **EO Index:** 6519

Occ Rank: Unknown
Origin: Natural/Native occurrence
Presence: Presumed Extant
Trend: Unknown

Dates Last Seen
Element: 1999-04-27
Site: 1999-04-27
Record Last Updated: 2004-05-07

Quad Summary: Los Alamitos (3311871/089D)
County Summary: Los Angeles

Lat/Long: 33.82213º / -118.08477º
UTM: Zone-11 N3742963 E399613
Mapping Precision: NON-SPECIFIC
Symbol Type: POLYGON
Area:

Township: 04S
Range: 12W
Section: 13 **Qtr:** SE
Meridian: S
Elevation: 25 ft

Location: EL DORADO REGIONAL PARK, NORTH OF WARDLOW ROAD AND WEST OF I-605, EAST LONG BEACH.

Location Detail: COLONY SITE LOCATED IN THE NORTHERN MOST PORTION OF THE PARK.

Ecological: HABITAT CONSISTS OF SEVERAL LARGE, MAN-MADE LAKES CONTAINING LARGE CLUMPS OF TULES AND CATTAILS.

Threat:

General: 1989: 50-70 PAIRS OBSERVED; NESTING SUCCESS UNKNOWN. NESTING REPORTED FROM THIS SITE 1991-93. 1994: 60 NESTED. 1995: 30 NESTED. 1996: UNKNOWN NUMBER NESTED. 1997: 80 NESTED. 1999: 140 NESTED.

Owner/Manager: CITY OF LONG BEACH

Agelaius tricolor

tricolored blackbird

Element Code: ABPBXB0020

Status	NDDB Element Ranks	Other Lists
Federal: None	**Global:** G2G3	**CDFG Status:** SC
State: None	**State:** S2	

Habitat Associations

General: HIGHLY COLONIAL SPECIES, MOST NUMBEROUS IN CENTRAL VALLEY & VICINITY. LARGELY ENDEMIC TO CALIFORNIA.

Micro: REQUIRES OPEN WATER, PROTECTED NESTING SUBSTRATE, & FORAGING AREA WITH INSECT PREY WITHIN A FEW KM OF THE COLONY.

Occurrence No. 332 **Map Index:** 39583 **EO Index:** 32179

Occ Rank: Unknown
Origin: Natural/Native occurrence
Presence: Presumed Extant
Trend: Unknown

Dates Last Seen
Element: 198X-XX-XX
Site: 198X-XX-XX

Record Last Updated: 1998-09-22

Quad Summary: Torrance (3311873/090D)
County Summary: Los Angeles

Lat/Long: 33.82705º / -118.34240º
UTM: Zone-11 N3743790 E375777
Mapping Precision: NON-SPECIFIC
Symbol Type: POLYGON
Area:

Township: 04S
Range: 14W
Section: 15 **Qtr:** SW
Meridian: S
Elevation: 75 ft

Location: MADRONA MARSH, AT MADRONA MARSH NATURE CENTER, TORRANCE.
Location Detail:
Ecological: HABITAT CONSISTS OF A VERNAL POOL AREA VEGETATED BY TULES.
Threat:
General: 75-100 INDIVIDUALS OBSERVED NESTING IN 1981 OR 1982 (BY COLLINS).
Owner/Manager: CITY OF TORRENCE-MADRONA MARSH

Agelaius tricolor

tricolored blackbird

Element Code: ABPBXB0020

Status	NDDB Element Ranks	Other Lists
Federal: None	**Global:** G2G3	**CDFG Status:** SC
State: None	**State:** S2	

Habitat Associations

General: HIGHLY COLONIAL SPECIES, MOST NUMBEROUS IN CENTRAL VALLEY & VICINITY. LARGELY ENDEMIC TO CALIFORNIA.

Micro: REQUIRES OPEN WATER, PROTECTED NESTING SUBSTRATE, & FORAGING AREA WITH INSECT PREY WITHIN A FEW KM OF THE COLONY.

Occurrence No. 397 **Map Index:** 55390 **EO Index:** 55390

Occ Rank: Unknown
Origin: Natural/Native occurrence
Presence: Presumed Extant
Trend: Unknown

Dates Last Seen
Element: 1997-04-27
Site: 1997-04-27
Record Last Updated: 2004-05-07

Quad Summary: Los Alamitos (3311871/089D)
County Summary: Los Angeles

Lat/Long: 33.80572º / -118.08720º
UTM: Zone-11 N3741147 E399368
Mapping Precision: SPECIFIC
Symbol Type: POINT
Radius: 80 meters

Township: 04S
Range: 12W
Section: 25 **Qtr:** XX
Meridian: S
Elevation: 20 ft

Location: EL DORADO REGIONAL PARK NATURE CENTER. S OF SPRING ST, N OF WILLOW ST, E OF STUDEBAKER RD & W OF I-605, LONG BEACH.

Location Detail: COLONY IN THE SOUTHERN-MOST POND.

Ecological: MAN-MADE LAKE WITH CATTAILS AND TULES.

Threat:

General: TCBB REPORTED TO HAVE NESTED HERE IN 1989, 1990 & 1993. 60-100 NESTED IN 1994. 90 NESTED IN 1995. 50 NESTED IN 1996. 100 OBSERVED NESTING 27 APR 1997.

Owner/Manager: CITY OF LONG BEACH

Aphanisma blitoides

aphanisma

Element Code: PDCHE02010

Status

Federal: None
State: None

NDDB Element Ranks

Global: G2
State: S1.1

Other Lists

CNPS List: 1B.2

Habitat Associations

General: COASTAL BLUFF SCRUB, COASTAL DUNES, COASTAL SCRUB.

Micro: ON BLUFFS AND SLOPES NEAR THE OCEAN IN SANDY OR CLAY SOILS. IN STEEP DECLINE ON THE ISLANDS AND THE MAINLAND. 1-305M.

Occurrence No. 5 **Map Index:** 17565 **EO Index:** 11724

Occ Rank: Unknown
Origin: Natural/Native occurrence
Presence: Presumed Extant
Trend: Unknown

Dates Last Seen

Element: 1930-04-XX
Site: 1930-04-XX

Record Last Updated: 1991-10-07

Quad Summary: Redondo Beach (3311874/090C)

County Summary: Los Angeles

Lat/Long: 33.77685º / -118.39592º
UTM: Zone-11 N3738289 E370748
Mapping Precision: NON-SPECIFIC
Symbol Type: POINT
Radius: 1 mile

Township: 04S
Range: 15W
Section: XX **Qtr:** XX
Meridian: S
Elevation: 1,000 ft

Location: PALOS VERDES HILLS.
Location Detail:
Ecological:
Threat:
General: NONE.
Owner/Manager: UNKNOWN

Astragalus pycnostachyus var. lanosissimus

Ventura Marsh milk-vetch

Element Code: PDFAB0F7B1

Status		NDDB Element Ranks		Other Lists	
Federal:	Endangered	**Global:**	G2T1	**CNPS List:**	1B.1
State:	Endangered	**State:**	S1.1		

Habitat Associations

General: COASTAL SALT MARSH.

Micro: WITHIN REACH OF HIGH TIDE OR PROTECTED BY BARRIER BEACHES, MORE RARELY NEAR SEEPS ON SANDY BLUFFS. 1-35M.

Occurrence No. 1 **Map Index:** 23778 **EO Index:** 19298

Occ Rank: None
Origin: Natural/Native occurrence
Presence: Possibly Extirpated
Trend: Unknown

Dates Last Seen
Element: 1882-10-XX
Site: 1987-XX-XX

Record Last Updated: 1998-11-09

Quad Summary: Seal Beach (3311861/072A)

County Summary: Orange

Lat/Long: 33.69572º / -118.03635º
UTM: Zone-11 N3728900 E403953
Mapping Precision: NON-SPECIFIC
Symbol Type: POLYGON
Area:

Township: 05S
Range: 11W
Section: XX **Qtr:** XX
Meridian: S
Elevation: 5 ft

Location: "LA BOLSA." (ASSUMED TO BE BOLSA BAY AREA BETWEEN SUNSET BEACH AND HUNTINGTON BEACH).

Location Detail: SEVERAL COLLECTIONS FROM 'LA BOLSA' ATTRIBUTED TO THIS VICINITY; EXACT LOCATION NOT KNOWN. MAPPED AT BOLSA CHICA SALT MARSH. THIS AREA VARIOUSLY KNOWN IN THE PAST AS 'LA BOLSA' AND 'LAS BOLSAS MARSHES'

Ecological: SALT MARSH.

Threat:

General: TYPE LOCALITY. 3 COLLECTIONS MADE AT THIS SITE BY PARISH AND PARISH IN 1881 AND 1882. AREA PARTLY AN ACTIVE OIL FIELD, PARTLY CDFG ECOLOGICAL RESERVE. NO PLANTS OBSERVED AT BOLSA CHICA OR ANAHEIM BAY DURING 1987 SEARCH BY F. ROBERTS.

Owner/Manager: DFG-BOLSA CHICA ER, PVT

Astragalus tener var. titi

coastal dunes milk-vetch

Element Code: PDFAB0F8R2

Status	NDDB Element Ranks	Other Lists
Federal: Endangered	**Global:** G1T1	**CNPS List:** 1B.1
State: Endangered	**State:** S1.1	

Habitat Associations

General: COASTAL BLUFF SCRUB, COASTAL DUNES.

Micro: MOIST, SANDY DEPRESSIONS OF BLUFFS OR DUNES ALONG AND NEAR THE PACIFIC OCEAN; ONE SITE ON A CLAY TERRACE. 1-50M.

Occurrence No. 4 **Map Index:** 42744 **EO Index:** 42744

Occ Rank: None
Origin: Natural/Native occurrence
Presence: Possibly Extirpated
Trend: Unknown

Dates Last Seen
Element: 1903-04-12
Site: 1903-04-12
Record Last Updated: 2000-04-12

Quad Summary: Hollywood (3411813/111D), Beverly Hills (3411814/111C), Venice (3311884/090B), Inglewood (3311883/090A)

County Summary: Los Angeles

Lat/Long: 33.97672º / -118.37467º
UTM: Zone-11 N3760426 E373012
Mapping Precision: NON-SPECIFIC
Symbol Type: POINT
Radius: 5 mile

Township: 02S
Range: 14W
Section: 20 **Qtr:** XX
Meridian: S
Elevation: 150 ft

Location: HYDE PARK (NEAR PRESENT DAY INGLEWOOD).

Location Detail: EXACT LOCATION NOT KNOWN. MAPPED IN THE GENERAL VICINITY OF INGLEWOOD.

Ecological:

Threat:

General: MAIN SOURCE OF INFORMATION FOR THIS SITE IS 1903 COLLECTION BY L. ABRAMS. R. BARNEBY (1964) BELIEVES THIS SITE IS PROBABLY EXTIRPATED.

Owner/Manager: UNKNOWN

Athene cunicularia

burrowing owl

Element Code: ABNSB10010

Status	NDDB Element Ranks	Other Lists
Federal: None	**Global:** G4	**CDFG Status:** SC
State: None	**State:** S2	

Habitat Associations

General: OPEN, DRY ANNUAL OR PERENIAL GRASSLANDS, DESERTS & SCRUBLANDS CHARACTERIZED BY LOW-GROWING VEGETATION.

Micro: SUBTERRANEAN NESTER, DEPENDENT UPON BURROWING MAMMALS, MOST NOTABLY, THE CALIFORNIA GROUND SQUIRREL.

Occurrence No. 180 **Map Index:** 24344 **EO Index:** 6517

Occ Rank: Fair
Origin: Natural/Native occurrence
Presence: Presumed Extant
Trend: Unknown

Dates Last Seen
Element: 1993-01-03
Site: 1993-01-03
Record Last Updated: 1994-01-10

Quad Summary: Seal Beach (3311861/072A)
County Summary: Orange

Lat/Long: 33.68488º / -118.02898º
UTM: Zone-11 N3727692 E404624
Mapping Precision: SPECIFIC
Symbol Type: POINT
Radius: 80 meters

Township: 06S
Range: 11W
Section: 03 **Qtr:** NW
Meridian: S
Elevation: 5 ft

Location: VICINITY OF BOLSA CHICA ECOLOGICAL RESERVE, NW OF HUNTINGTON BEACH.
Location Detail:
Ecological: HABITAT CONSISTS OF A DISTURBED AREA OF NON-NATIVE GRASSES WITHIN SOUTHERN COASTAL SALT MARSH.
Threat: THREATS INCLUDE OIL EXTRACTION OPERATIONS, NON-NATIVE PREDATORS, AND DEVELOPMENT.
General: 1 ADULT/BURROW OBSERVED. ALTHOUGH HUMAN DISTURBANCE IS MINIMAL, TRACKS AND SIGN OF RED FOX WERE FOUND IN THE IMMEDIATE VICINITY.
Owner/Manager: PVT-SHELL WESTERN, KOLL CO

Athene cunicularia

burrowing owl

Element Code: ABNSB10010

Status	NDDB Element Ranks	Other Lists
Federal: None	**Global:** G4	**CDFG Status:** SC
State: None	**State:** S2	

Habitat Associations

General: OPEN, DRY ANNUAL OR PERENIAL GRASSLANDS, DESERTS & SCRUBLANDS CHARACTERIZED BY LOW-GROWING VEGETATION.

Micro: SUBTERRANEAN NESTER, DEPENDENT UPON BURROWING MAMMALS, MOST NOTABLY, THE CALIFORNIA GROUND SQUIRREL.

Occurrence No. 571 **Map Index:** 51258 **EO Index:** 51258

Occ Rank: Unknown
Origin: Natural/Native occurrence
Presence: Presumed Extant
Trend: Unknown

Dates Last Seen
Element: 1921-05-05
Site: 1921-05-05
Record Last Updated: 2003-05-09

Quad Summary: Inglewood (3311883/090A), South Gate (3311882/089B), Los Angeles (3411812/110C), Hollywood (3411813/111D), Pasadena (3411822/110B), Burbank (3411823/111A)

County Summary: Los Angeles

Lat/Long: 34.05366º / -118.24549º
UTM: Zone-11 N3768805 E385050
Mapping Precision: NON-SPECIFIC
Symbol Type: POINT
Radius: 5 mile

Township: 01S
Range: 13W
Section: 28 **Qtr:** XX
Meridian: S
Elevation: 280 ft

Location: HERMON HILLS, LOS ANGELES.

Location Detail: UNABLE TO FIND ANY REFERENCE TO "HERMON HILLS". NO OTHER LOCATION INFORMATION GIVEN. MAPPED AS A 5 MILE RADIUS CIRCLE AT THE LAT/ LONG COORDINATES GIVEN IN MVZ RECORDS (MAX ERROR DISTANCE GIVEN AS 40 MILES).

Ecological:

Threat:

General: MVZ EGG SET #3843 COLLECTED 28 APR 1919 BY ALDEN H. MILLER. MVZ EGG SET #3844 COLLECTED 5 MAY 1921 BY ALDEN H. MILLER

Owner/Manager: UNKNOWN

Atriplex pacifica

South Coast saltscale

Element Code: PDCHE041C0

Status	NDDB Element Ranks	Other Lists
Federal: None	**Global:** G3G4	**CNPS List:** 1B.2
State: None	**State:** S2.2	

Habitat Associations

General: COASTAL SCRUB, COASTAL BLUFF SCRUB, PLAYAS, CHENOPOD SCRUB.

Micro: ALKALI SOILS. 1-500M.

Occurrence No. 4 **Map Index:** 34592 **EO Index:** 252

Occ Rank: Unknown
Origin: Natural/Native occurrence
Presence: Presumed Extant
Trend: Unknown

Dates Last Seen
Element: 1903-10-14
Site: 1903-10-14

Record Last Updated: 1996-03-20

Quad Summary: San Pedro (3311863/073A), Torrance (3311873/090D)

County Summary: Los Angeles

Lat/Long: 33.73644º / -118.28092º
UTM: Zone-11 N3733670 E381341
Mapping Precision: NON-SPECIFIC
Symbol Type: POINT
Radius: 1 mile

Township: 05S
Range: 14W
Section: XX **Qtr:** XX
Meridian: S
Elevation: 60 ft

Location: SAN PEDRO.

Location Detail: MAPPED BY CNDDB AT POST OFFICE.

Ecological:

Threat: DEVELOPMENT.

General: ORIGINAL LABEL: ATRIPLEX MICROCARPA.

Owner/Manager: UNKNOWN

Atriplex pacifica

South Coast saltscale

Element Code: PDCHE041C0

Status	NDDB Element Ranks	Other Lists
Federal: None	**Global:** G3G4	**CNPS List:** 1B.2
State: None	**State:** S2.2	

Habitat Associations

General: COASTAL SCRUB, COASTAL BLUFF SCRUB, PLAYAS, CHENOPOD SCRUB.

Micro: ALKALI SOILS. 1-500M.

Occurrence No. 7 **Map Index:** 34591 **EO Index:** 12351

Occ Rank: Unknown
Origin: Natural/Native occurrence
Presence: Presumed Extant
Trend: Unknown

Dates Last Seen
Element: 1931-08-23
Site: 1931-08-23
Record Last Updated: 1996-03-20

Quad Summary: San Pedro (3311863/073A), Torrance (3311873/090D)

County Summary: Los Angeles

Lat/Long: 33.74588º / -118.33602º
UTM: Zone-11 N3734781 E376250
Mapping Precision: NON-SPECIFIC
Symbol Type: POINT
Radius: 1 mile

Township: 01S
Range: 14W
Section: XX **Qtr:** XX
Meridian: S
Elevation: 1,400 ft

Location: SAN PEDRO HILLS.

Location Detail: MAPPED AT CNDDB AT SAN PEDRO HILL AND SURROUNDINGS; UNSURE OF EXACT LOCATION.

Ecological: OPEN HILLSIDE.

Threat:

General: ONLY INFO IS ABOVE DESCRIPTION. 1903 COLLECTION BY ABRAMS "SAN PEDRO HILLS NEAR ROCKY POINT" ATTRIBUTED TO THIS SITE.

Owner/Manager: UNKNOWN

Atriplex pacifica

South Coast saltscale

Element Code: PDCHE041C0

Status	NDDB Element Ranks	Other Lists
Federal: None	**Global:** G3G4	**CNPS List:** 1B.2
State: None	**State:** S2.2	

Habitat Associations

General: COASTAL SCRUB, COASTAL BLUFF SCRUB, PLAYAS, CHENOPOD SCRUB.

Micro: ALKALI SOILS. 1-500M.

Occurrence No. 8 **Map Index:** 01700 **EO Index:** 759

Occ Rank: Unknown
Origin: Natural/Native occurrence
Presence: Presumed Extant
Trend: Unknown

Dates Last Seen
Element: 1903-10-15
Site: 1903-10-15

Record Last Updated: 1996-02-12

Quad Summary: Torrance (3311873/090D), Redondo Beach (3311874/090C)

County Summary: Los Angeles

Lat/Long: 33.82921º / -118.39056º
UTM: Zone-11 N3744088 E371323
Mapping Precision: NON-SPECIFIC
Symbol Type: POINT
Radius: 1 mile

Township: 04S
Range: 14W
Section: XX **Qtr:** XX
Meridian: S
Elevation: 50 ft

Location: "REDONDO."

Location Detail: MAPPED AS BEST GUESS BY CNDDB AT REDONDO BEACH.

Ecological:

Threat:

General: ORIGINAL LABEL: ATRIPLEX SP.

Owner/Manager: UNKNOWN

Atriplex parishii

Parish's brittlescale

Element Code: PDCHE041D0

Status	NDDB Element Ranks	Other Lists
Federal: None	**Global:** G1G2	**CNPS List:** 1B.1
State: None	**State:** S1.1	

Habitat Associations

General: ALKALI MEADOWS, VERNAL POOLS, CHENOPOD SCRUB, PLAYAS.

Micro: USUALLY ON DRYING ALKALI FLATS WITH FINE SOILS. 4-140M.

Occurrence No. 5 **Map Index:** 23782 **EO Index:** 7795

Occ Rank: Unknown
Origin: Natural/Native occurrence
Presence: Presumed Extant
Trend: Unknown

Dates Last Seen
Element: XXXX-XX-XX
Site: XXXX-XX-XX

Record Last Updated: 1994-08-04

Quad Summary: Long Beach (3311872/089C)

County Summary: Los Angeles

Lat/Long: 33.83821º / -118.17658º
UTM: Zone-11 N3744839 E391136
Mapping Precision: NON-SPECIFIC
Symbol Type: POINT
Radius: 1 mile

Township: 04S
Range: 12W
Section: XX **Qtr:** XX
Meridian: S
Elevation: 75 ft

Location: BIXBY.

Location Detail: MAPPED NEAR BIXBY KNOLLS, NORTH OF LONG BEACH.

Ecological:

Threat:

General: ONLY SOURCE OF SITE INFORMATION IS COLLECTION BY BRANDEGEE AT AN UNKNOWN DATE. BRAMLET BELIVES THAT LONG BEACH AREA PROVIDED SUITABLE HABITAT FOR A. PARISHII IN THE PAST.

Owner/Manager: UNKNOWN

Atriplex parishii

Parish's brittlescale

Element Code: PDCHE041D0

Status	NDDB Element Ranks	Other Lists
Federal: None	**Global:** G1G2	**CNPS List:** 1B.1
State: None	**State:** S1.1	

Habitat Associations

General: ALKALI MEADOWS, VERNAL POOLS, CHENOPOD SCRUB, PLAYAS.

Micro: USUALLY ON DRYING ALKALI FLATS WITH FINE SOILS. 4-140M.

Occurrence No. 9 **Map Index:** 01700 **EO Index:** 1401

Occ Rank: Unknown
Origin: Natural/Native occurrence
Presence: Presumed Extant
Trend: Unknown

Dates Last Seen
Element: XXXX-XX-XX
Site: XXXX-XX-XX

Record Last Updated: 1996-09-17

Quad Summary: Torrance (3311873/090D), Redondo Beach (3311874/090C)

County Summary: Los Angeles

Lat/Long: 33.82921º / -118.39056º
UTM: Zone-11 N3744088 E371323
Mapping Precision: NON-SPECIFIC
Symbol Type: POINT
Radius: 1 mile

Township: 04S
Range: 14W
Section: XX **Qtr:** XX
Meridian: S
Elevation: 50 ft

Location: REDONDO (BEACH?).
Location Detail:
Ecological:
Threat:
General: ONLY SOURCE OF INFORMATION FOR THIS SITE IS UNDATED COLLECTION BY BRAUNTON.
Owner/Manager: UNKNOWN

Atriplex serenana var. davidsonii

Davidson's saltscale

Element Code: PDCHE041T1

Status	NDDB Element Ranks	Other Lists
Federal: None	**Global:** G5T2?	**CNPS List:** 1B.2
State: None	**State:** S2?	

Habitat Associations

General: COASTAL BLUFF SCRUB, COASTAL SCRUB.

Micro: ALKALINE SOIL. 3-250M.

Occurrence No. 3 **Map Index:** 34592 **EO Index:** 253

Occ Rank: Unknown
Origin: Natural/Native occurrence
Presence: Presumed Extant
Trend: Unknown

Dates Last Seen
Element: 1906-06-02
Site: 1906-06-02

Record Last Updated: 1996-02-23

Quad Summary: San Pedro (3311863/073A), Torrance (3311873/090D)

County Summary: Los Angeles

Lat/Long: 33.73644º / -118.28092º
UTM: Zone-11 N3733670 E381341
Mapping Precision: NON-SPECIFIC
Symbol Type: POINT
Radius: 1 mile

Township: 05S
Range: 14W
Section: XX **Qtr:** XX
Meridian: S
Elevation: 60 ft

Location: SAN PEDRO.

Location Detail: COLLECTION BY PARISH FROM LONG BEACH IS INCLUDED AT THIS SITE.

Ecological:

Threat: DEVELOPMENT.

General: VICINITY REPRESENTED BY TWO COLLECTIONS: EASTWOOD #165 IN 1906 AND PARISH SN (DS) IN 1891.

Owner/Manager: UNKNOWN

Atriplex serenana var. davidsonii

Davidson's saltscale

Element Code: PDCHE041T1

Status	NDDB Element Ranks	Other Lists
Federal: None	**Global:** G5T2?	**CNPS List:** 1B.2
State: None	**State:** S2?	

Habitat Associations

General: COASTAL BLUFF SCRUB, COASTAL SCRUB.

Micro: ALKALINE SOIL. 3-250M.

Occurrence No. 23 **Map Index:** 02237 **EO Index:** 53703

Occ Rank: Unknown
Origin: Natural/Native occurrence
Presence: Presumed Extant
Trend: Unknown

Dates Last Seen
Element: XXXX-XX-XX
Site: XXXX-XX-XX

Record Last Updated: 2003-12-29

Quad Summary: Los Alamitos (3311871/089D), Seal Beach (3311861/072A)

County Summary: Orange, Los Angeles

Lat/Long: 33.74423º / -118.10420º
UTM: Zone-11 N3734344 E397722
Mapping Precision: NON-SPECIFIC
Symbol Type: POINT
Radius: 3/5 mile

Township: 05S
Range: 12W
Section: 14 **Qtr:** XX
Meridian: S
Elevation: 20 ft

Location: SEAL BEACH.
Location Detail:
Ecological:
Threat:
General: NEEDS FIELDWORK. ONLY SOURCE OF INFORMATION FOR THIS SITE IS FROM WESTERN RIVERSIDE COUNTY MSHCP SPECIES REVIEW FOR ATRIPLEX SERENANA V. DAVIDSONII.
Owner/Manager: UNKNOWN

Buteo regalis

ferruginous hawk

Element Code: ABNKC19120

Status	NDDB Element Ranks	Other Lists
Federal: None	**Global:** G4	**CDFG Status:**
State: None	**State:** S3S4	

Habitat Associations

General: OPEN GRASSLANDS, SAGEBRUSH FLATS, DESERT SCRUB, LOW FOOTHILLS & FRINGES OF PINYON-JUNIPER HABITATS.

Micro: EATS MOSTLY LAGOMORPHS, GROUND SQUIRRELS, AND MICE. POPULATION TRENDS MAY FOLLOW LAGOMORPH POPULATION CYCLES.

Occurrence No. 15 **Map Index:** 65995 **EO Index:** 66074

Occ Rank: Good
Origin: Natural/Native occurrence
Presence: Presumed Extant
Trend: Unknown

Dates Last Seen
Element: 1997-11-28
Site: 1997-11-28
Record Last Updated: 2006-08-23

Quad Summary: Los Alamitos (3311871/089D)
County Summary: Orange

Lat/Long: 33.78352º / -118.06261º
UTM: Zone-11 N3738661 E401619
Mapping Precision: NON-SPECIFIC
Symbol Type: POINT
Radius: 3/5 mile

Township: 04S
Range: 11W
Section: 32 **Qtr:** XX
Meridian: S
Elevation: 20 ft

Location: SOUTH OF LOS ALAMITOS, LOS ALAMITOS ARMED FORCES RESERVE CENTER. NORTH OF I-405 & EAST OF LOS ALAMITOS BLVD.

Location Detail: MAPPED ACCORDING TO MAP ATTACHED TO SOURCE.

Ecological: RUDERAL, LOW GROWING VEGETATION ON FLAT AREA SURROUNDING AIR FIELD. VEGETATIVE COMMUNITY NOT DETERMINED AS ACCESS IS RESTRICTED.

Threat: PROPOSED ADJACENT DEVELOPMENT OF GOLF COURSE & RESIDENTIAL/COMMUNITY DEVELOPMENT.

General: WINTERING SITE. 2 IMMATURE INDIVIDUALS OBSERVED OVER 30 MINUTE PERIOD ON 28 NOV 1997 FORAGING/FEEDING IN AREA.

Owner/Manager: DOD

Calystegia sepium ssp. binghamiae

Santa Barbara morning-glory

Element Code: PDCON040E6

Status

Federal: None
State: None

NDDB Element Ranks

Global: G5TH
State: SH

Other Lists

CNPS List: 1A

Habitat Associations

General: COASTAL MARSHES.
Micro: 0-30M.

Occurrence No. 5 **Map Index:** 23778 **EO Index:** 48222

Occ Rank: Unknown
Origin: Natural/Native occurrence
Presence: Presumed Extant
Trend: Unknown

Dates Last Seen

Element: 1932-07-19
Site: 1932-07-19
Record Last Updated: 2002-07-11

Quad Summary: Seal Beach (3311861/072A)
County Summary: Orange

Lat/Long: 33.69572º / -118.03635º
UTM: Zone-11 N3728900 E403953
Mapping Precision: NON-SPECIFIC
Symbol Type: POLYGON
Area:

Township: 05S
Range: 11W
Section: XX **Qtr:** XX
Meridian: S
Elevation: 5 ft

Location: BOLSA CHICA.
Location Detail: EXACT LOCATION UNKNOWN, MAPPED IN GENERAL VICINITY OF BOLSA CHICA BY CNDDB.
Ecological:
Threat:
General: ONLY SOURCES OF INFORMATION FOR THIS SITE ARE TWO 1932 COLLECTIONS BY BOOTH; NEEDS FIELDWORK.
Owner/Manager: DFG-BOLSA CHICA ER, PVT

Centromadia parryi ssp. australis

southern tarplant **Element Code:** PDAST4R0P4

Status	NDDB Element Ranks	Other Lists
Federal: None	**Global:** G4T2	**CNPS List:** 1B.1
State: None	**State:** S2.1	

Habitat Associations

General: MARSHES AND SWAMPS (MARGINS), VALLEY AND FOOTHILL GRASSLAND.

Micro: OFTEN IN DISTURBED SITES NEAR THE COAST AT MARSH EDGES; ALSO IN ALKALINE SOILS SOMETIMES WITH SALTGRASS. SOMETIMES ON V

Occurrence No. 17 **Map Index:** 35376 **EO Index:** 30115

Occ Rank: Fair
Origin: Natural/Native occurrence
Presence: Presumed Extant
Trend: Unknown

Dates Last Seen
Element: 1993-08-27
Site: 1997-10-10
Record Last Updated: 2006-01-13

Quad Summary: Seal Beach (3311861/072A)
County Summary: Orange

Lat/Long: 33.70868º / -118.04336º
UTM: Zone-11 N3730344 E403318
Mapping Precision: NON-SPECIFIC
Symbol Type: POLYGON
Area:

Township: 05S
Range: 11W
Section: 28 **Qtr:** XX
Meridian: S
Elevation: 50 ft

Location: BOLSA CHICA, SOUTH OF LOS PATOS AVE.

Location Detail: TWO COLONIES ON THE MESA ABOVE THE WETLANDS, MAPPED ACCORDING TO SPECIFIC FIELD SURVEY MAPS. THIRD COLONY MAPPED BASED ON NON-SPECIFIC SITE DESCRIPTION FROM A 1970 COLLECTION BY HENRICKSON.

Ecological: NON-NATIVE GRASSLAND / RUDERAL ROADSIDE VEGETATION. ASSOCIATED WITH ANNUAL GRASSES, SALSOLA TRAGUS, HEMIZONIA FASCICULATA, AND BRASSICA NIGRA.

Threat: N COLONIES: DIRT BIKES, HIKING, SITE PROPOSED FOR FUTURE DEVELOPMENT. S COLONY: CHANNEL MAINTENANCE AND GRADING.

General: 4 PLANTS OBSERVED IN NW COLONY, ABOUT 40 IN CENTER COLONY IN 1993. GARDINER FOUND NO PLANTS OR SUITABLE HABITAT IN 1997 ALONG THE CHANNEL WHERE THE SOUTHERN POLYGON IS MAPPED. INCLUDES FORMER OCCURRENCE #19.

Owner/Manager: UNKNOWN

Centromadia parryi ssp. australis

southern tarplant

Element Code: PDAST4R0P4

Status	NDDB Element Ranks	Other Lists
Federal: None	**Global:** G4T2	**CNPS List:** 1B.1
State: None	**State:** S2.1	

Habitat Associations

General: MARSHES AND SWAMPS (MARGINS), VALLEY AND FOOTHILL GRASSLAND.

Micro: OFTEN IN DISTURBED SITES NEAR THE COAST AT MARSH EDGES; ALSO IN ALKALINE SOILS SOMETIMES WITH SALTGRASS. SOMETIMES ON V

Occurrence No. 18 **Map Index:** 35378 **EO Index:** 30113

Occ Rank: Good
Origin: Natural/Native occurrence
Presence: Presumed Extant
Trend: Unknown

Dates Last Seen
Element: 1997-10-10
Site: 1997-10-10
Record Last Updated: 1998-09-01

Quad Summary: Seal Beach (3311861/072A)
County Summary: Orange

Lat/Long: 33.70741º / -118.05327º
UTM: Zone-11 N3730212 E402398
Mapping Precision: SPECIFIC
Symbol Type: POLYGON
Area: 26.4 acres

Township: 05S
Range: 11W
Section: XX **Qtr:** XX
Meridian: S
Elevation: 25 ft

Location: BOLSA CHICA, SOUTH OF WARNER AVE AND EAST OF BOLSA BAY. NEAR HUNTINGTON BEACH HARBOR BRIDGE.

Location Detail: THREE COLONIES MAPPED FROM 200 - 700 METERS SOUTH OF WARNER AVE AND 200 - 400 METERS EAST OF THE BAY.

Ecological: NON-NATIVE GRASSLAND/DISTURBED RUDERAL ROADSIDE AREAS. ASSOCIATED WITH ANNUAL GRASSES, BRASSICA NIGRA, SALVIA, HEMIZONIA FASCICULATA, AND SALSOLA TRAGUS.

Threat: DIRT BIKING, HIKING. FUTURE DEVELOPMENT PROPOSED FOR SITE.

General: 500+ PLANTS OBSERVED IN THREE COLONIES IN 1993, 25-30 PLANTS SEEN BY GARDINER & JONES IN 1997, BUT MAY NOT HAVE SURVEYED A VERY LARGE AREA.

Owner/Manager: PVT

Centromadia parryi ssp. australis

southern tarplant

Element Code: PDAST4R0P4

Status	NDDB Element Ranks	Other Lists
Federal: None	**Global:** G4T2	**CNPS List:** 1B.1
State: None	**State:** S2.1	

Habitat Associations

General: MARSHES AND SWAMPS (MARGINS), VALLEY AND FOOTHILL GRASSLAND.

Micro: OFTEN IN DISTURBED SITES NEAR THE COAST AT MARSH EDGES; ALSO IN ALKALINE SOILS SOMETIMES WITH SALTGRASS. SOMETIMES ON V

Occurrence No. 20 **Map Index:** 35370 **EO Index:** 30112

Occ Rank: Unknown
Origin: Natural/Native occurrence
Presence: Presumed Extant
Trend: Unknown

Dates Last Seen
Element: 1933-09-17
Site: 1933-09-17
Record Last Updated: 1997-02-07

Quad Summary: Newport Beach (3311768/071B), Anaheim (3311778/088C), Seal Beach (3311861/072A), Los Alamitos (3311871/089D)
County Summary: Orange

Lat/Long: 33.76153º / -118.00779º
UTM: Zone-11 N3736171 E406671
Mapping Precision: NON-SPECIFIC
Symbol Type: POINT
Radius: 1 mile

Township: 05S
Range: 11W
Section: XX **Qtr:** XX
Meridian: S
Elevation: 40 ft

Location: WESTMINISTER.
Location Detail: INCLUDES COLLECTION FROM "5 MILES WEST OF SANTA ANA".
Ecological: COMMON IN WEEDY ALKALI FIELDS WITH HELIOTROPUM CURASSAVICUM.
Threat:
General: VICINITY REPORTED IN THREE COLLECTIONS; KECK (#2524 POM) IN 1933, WHEELER (#849 RSA), AND ANONYMOUS COLLECTION FROM THE BRANDEGEE HERBARIUM (UC #89014) FROM 1920.
Owner/Manager: UNKNOWN

Centromadia parryi ssp. australis

southern tarplant **Element Code:** PDAST4R0P4

Status	NDDB Element Ranks	Other Lists
Federal: None	**Global:** G4T2	**CNPS List:** 1B.1
State: None	**State:** S2.1	

Habitat Associations

General: MARSHES AND SWAMPS (MARGINS), VALLEY AND FOOTHILL GRASSLAND.

Micro: OFTEN IN DISTURBED SITES NEAR THE COAST AT MARSH EDGES; ALSO IN ALKALINE SOILS SOMETIMES WITH SALTGRASS. SOMETIMES ON V

Occurrence No. 21 **Map Index:** 35373 **EO Index:** 30109

Occ Rank: None
Origin: Natural/Native occurrence
Presence: Extirpated
Trend: Unknown

Dates Last Seen
Element: 1932-06-28
Site: 1997-10-10
Record Last Updated: 1998-08-31

Quad Summary: Los Alamitos (3311871/089D)
County Summary: Los Angeles

Lat/Long: 33.79424º / -118.11906º
UTM: Zone-11 N3739904 E396406
Mapping Precision: NON-SPECIFIC
Symbol Type: POLYGON
Area:

Township: 04S
Range: 11W
Section: 27 **Qtr:** SE
Meridian: S
Elevation: 40 ft

Location: BRYANT RANCH NEAR LONG BEACH, ABOUT 0.25 MILE SOUTH OF STANFORD JR HIGH SCHOOL.

Location Detail: COLLECTED IN 1932 AT MIDDLE OF WESTERN BOUNDARY OF 40 ACRE ORANGE GROVE AT BRYANT AVENUE AND HANSEN ROAD (T04S T11W NE 1/4 SE 1/4 SECTION 27). BRYANT AVE AND HANSEN ROAD APPARENTLY NO LONGER EXIST IN THIS AREA.

Ecological:

Threat:

General: MAPPED BASED ON 1932 COLLECTION BY WOLF. ACCORDING TO G. GARDINER (1997) THIS SITE WAS PROBABLY ONCE A TIDAL FLOODPLAIN. NOW DEVELOPED INTO A BEACH COMMUNITY. NO SUITABLE HABITAT REMAINS.

Owner/Manager: UNKNOWN

Centromadia parryi ssp. australis

southern tarplant

Element Code: PDAST4R0P4

Status	NDDB Element Ranks	Other Lists
Federal: None	**Global:** G4T2	**CNPS List:** 1B.1
State: None	**State:** S2.1	

Habitat Associations

General: MARSHES AND SWAMPS (MARGINS), VALLEY AND FOOTHILL GRASSLAND.

Micro: OFTEN IN DISTURBED SITES NEAR THE COAST AT MARSH EDGES; ALSO IN ALKALINE SOILS SOMETIMES WITH SALTGRASS. SOMETIMES ON V

Occurrence No. 22 **Map Index:** 35374 **EO Index:** 30110

Occ Rank: None
Origin: Natural/Native occurrence
Presence: Extirpated
Trend: Unknown

Dates Last Seen
Element: 1934-08-16
Site: 1997-10-10
Record Last Updated: 1998-08-31

Quad Summary: Los Alamitos (3311871/089D)
County Summary: Los Angeles

Lat/Long: 33.78683º / -118.12355º
UTM: Zone-11 N3739087 E395981
Mapping Precision: NON-SPECIFIC
Symbol Type: POLYGON
Area:

Township: 04S
Range: 12W
Section: 34 **Qtr:** NE
Meridian: S
Elevation: 15 ft

Location: BRYANT RANCH NEAR LONG BEACH, VICINITY OF WHALEY PARK.

Location Detail: COLLECTED IN 1934 300 FEET EAST OF THE CENTER OF SECTION 34 AND 100 FEET SOUTH OF THE NORTH LINE OF THE SAME SECTION.

Ecological:

Threat:

General: MAPPED BASED ON 1934 COLLECTION BY WOLF. ACCORDING TO G. GARDINER (1997), THIS SITE WAS PROBABLY ONCE A FLOODPLAIN WHICH HAS BEEN DEVELOPED INTO A BEACH COMMUNITY. NO SUITABLE HABITAT REMAINS.

Owner/Manager: UNKNOWN

Centromadia parryi ssp. australis

southern tarplant

Element Code: PDAST4R0P4

Status	NDDB Element Ranks	Other Lists
Federal: None	**Global:** G4T2	**CNPS List:** 1B.1
State: None	**State:** S2.1	

Habitat Associations

General: MARSHES AND SWAMPS (MARGINS), VALLEY AND FOOTHILL GRASSLAND.

Micro: OFTEN IN DISTURBED SITES NEAR THE COAST AT MARSH EDGES; ALSO IN ALKALINE SOILS SOMETIMES WITH SALTGRASS. SOMETIMES ON V

Occurrence No. 23 **Map Index:** 35372 **EO Index:** 30999

Occ Rank: None
Origin: Natural/Native occurrence
Presence: Extirpated
Trend: Unknown

Dates Last Seen
Element: 1932-09-13
Site: 1997-10-10
Record Last Updated: 1998-08-31

Quad Summary: Los Alamitos (3311871/089D)
County Summary: Orange

Lat/Long: 33.79381º / -118.07950º
UTM: Zone-11 N3739818 E400068
Mapping Precision: NON-SPECIFIC
Symbol Type: POLYGON
Area:

Township: 04S
Range: 11W
Section: 30 **Qtr:** SW
Meridian: S
Elevation: 25 ft

Location: BRYANT RANCH NEAR LONG BEACH, WEST OF ROSSMOOR SCHOOL.

Location Detail: COLLECTED IN 1932 0.3 MILE WEST OF LOS ALAMITOS BLVD, 700 FEET SOUTH OF BRYANT AVE (800 FEET EAST AND 700 FEET SOUTH OF THE NW CORNER OF THE SW 1/4 OF SECTION 30, T04S R11W). THIS BRYANT AVE APPARENTLY NO LONGER EXISTS.

Ecological:

Threat:

General: MAPPED BASED ON 1932 COLLECTION BY WOLF. ACCORDING TO G. GARDINER (1997) SITE WAS PROBABLY ONCE A TIDAL FLOODPLAIN WHICH HAS BEEN DEVELOPED INTO A BEACH COMMINUTY. NO SUITABLE HABITAT REMAINS.

Owner/Manager: UNKNOWN

Centromadia parryi ssp. australis

southern tarplant

Element Code: PDAST4R0P4

Status	NDDB Element Ranks	Other Lists
Federal: None	**Global:** G4T2	**CNPS List:** 1B.1
State: None	**State:** S2.1	

Habitat Associations

General: MARSHES AND SWAMPS (MARGINS), VALLEY AND FOOTHILL GRASSLAND.

Micro: OFTEN IN DISTURBED SITES NEAR THE COAST AT MARSH EDGES; ALSO IN ALKALINE SOILS SOMETIMES WITH SALTGRASS. SOMETIMES ON V

Occurrence No. 24 **Map Index:** 35375 **EO Index:** 30111

Occ Rank: Unknown
Origin: Natural/Native occurrence
Presence: Presumed Extant
Trend: Unknown

Dates Last Seen
Element: 1973-06-15
Site: 1973-06-15
Record Last Updated: 1997-02-04

Quad Summary: Los Alamitos (3311871/089D)
County Summary: Los Angeles

Lat/Long: 33.77027º / -118.11912º
UTM: Zone-11 N3737247 E396372
Mapping Precision: NON-SPECIFIC
Symbol Type: POLYGON
Area:

Township: 05S
Range: 12W
Section: 03 **Qtr:** NE
Meridian: S
Elevation: 10 ft

Location: LONG BEACH, WEST OF PACIFIC COAST HIGHWAY AND SOUTH OF 7TH STREET.

Location Detail: COLLECTED IN 1932 IN LOW MARSH GROUND 100-200 FEET WEST OF HIGHWAY AT SE CORNER OF OIL LEASE IN THE NE 1/4 OF SECTION 3. 1973 COLLECTION FROM BELOW THE STATE UNIVERSITY NEAR PACIFIC COAST HIGHWAY IS ALSO ATTRIBUTED TO THIS SITE.

Ecological: IN SALINE AREAS BELOW GRASS DOMINATED HILLSIDE. ASSOCIATED WITH BROMUS, LOLIUM, AND AVENA.

Threat:

General: TWO COLLECTIONS FROM THIS VICINITY; WOLF (#4098 RSA) IN 1932 AND J. HENDRICKSON (#10706 RSA) IN 1973.

Owner/Manager: UNKNOWN

Centromadia parryi ssp. australis

southern tarplant

Element Code: PDAST4R0P4

Status	NDDB Element Ranks	Other Lists
Federal: None	**Global:** G4T2	**CNPS List:** 1B.1
State: None	**State:** S2.1	

Habitat Associations

General: MARSHES AND SWAMPS (MARGINS), VALLEY AND FOOTHILL GRASSLAND.

Micro: OFTEN IN DISTURBED SITES NEAR THE COAST AT MARSH EDGES; ALSO IN ALKALINE SOILS SOMETIMES WITH SALTGRASS. SOMETIMES ON V

Occurrence No. 25 **Map Index:** 35371 **EO Index:** 29314

Occ Rank: Unknown
Origin: Natural/Native occurrence
Presence: Presumed Extant
Trend: Unknown

Dates Last Seen
Element: 1932-XX-XX
Site: 1932-XX-XX

Record Last Updated: 1997-03-17

Quad Summary: Long Beach (3311872/089C)
County Summary: Los Angeles

Lat/Long: 33.78593º / -118.18194º
UTM: Zone-11 N3739048 E390574
Mapping Precision: NON-SPECIFIC
Symbol Type: POLYGON
Area:

Township: 04S
Range: 12W
Section: 31 **Qtr:** NW
Meridian: S
Elevation: 15 ft

Location: BRYANT RANCH NEAR LONG BEACH, NORTH OF 7TH STREET AND EAST OF ATLANTIC AVE.
Location Detail: COLLECTED IN T04S R12W NW 1/4 SECTION 31.
Ecological:
Threat:
General: ONLY SOURCE OF INFORMATION FOR THIS SITE IS 1932 COLLECTION BY SNOW.
Owner/Manager: UNKNOWN

Centromadia parryi ssp. australis

southern tarplant **Element Code:** PDAST4R0P4

Status	NDDB Element Ranks	Other Lists
Federal: None	**Global:** G4T2	**CNPS List:** 1B.1
State: None	**State:** S2.1	

Habitat Associations

General: MARSHES AND SWAMPS (MARGINS), VALLEY AND FOOTHILL GRASSLAND.

Micro: OFTEN IN DISTURBED SITES NEAR THE COAST AT MARSH EDGES; ALSO IN ALKALINE SOILS SOMETIMES WITH SALTGRASS. SOMETIMES ON V

Occurrence No. 29 **Map Index:** 35369 **EO Index:** 7744

Occ Rank: Unknown
Origin: Natural/Native occurrence
Presence: Presumed Extant
Trend: Unknown

Dates Last Seen
Element: 1931-07-31
Site: 1931-07-31
Record Last Updated: 1997-02-04

Quad Summary: South Gate (3311882/089B)
County Summary: Los Angeles

Lat/Long: 33.98902º / -118.13773º
UTM: Zone-11 N3761522 E394916
Mapping Precision: NON-SPECIFIC
Symbol Type: POINT
Radius: 2/5 mile

Township: 02S
Range: 12W
Section: XX **Qtr:** XX
Meridian: S
Elevation: 60 ft

Location: EAST LOS ANGELES, TELEGRAPH ROAD NEAR SANTA FE RAILROAD CROSSING.

Location Detail: MAPPED EAST OF THE SANTA ANA FREEWAY (I-5) AT GARFIELD AVE NEAR THE ATCHISON, TOPEKA AND SANTA FE TRACKS, CITY OF COMMERCE.

Ecological:

Threat:

General: ONLY SOURCE OF INFORMATION FOR THIS SITE IS 1931 COLLECTION BY EWAN. SPECIMEN FILED IN H. PUNGENS FILE AT RSA, BUT HAS BEEN TENATIVELY IDENTIFIED TO H. PARRYI SSP. AUSTRALIS BY D. BRAMLET (1990).

Owner/Manager: UNKNOWN

Centromadia parryi ssp. australis

southern tarplant

Element Code: PDAST4R0P4

Status	NDDB Element Ranks	Other Lists
Federal: None	**Global:** G4T2	**CNPS List:** 1B.1
State: None	**State:** S2.1	

Habitat Associations

General: MARSHES AND SWAMPS (MARGINS), VALLEY AND FOOTHILL GRASSLAND.

Micro: OFTEN IN DISTURBED SITES NEAR THE COAST AT MARSH EDGES; ALSO IN ALKALINE SOILS SOMETIMES WITH SALTGRASS. SOMETIMES ON V

Occurrence No. 30 **Map Index:** 28742 **EO Index:** 30040

Occ Rank: Unknown
Origin: Natural/Native occurrence
Presence: Presumed Extant
Trend: Unknown

Dates Last Seen
Element: 1905-07-XX
Site: 1905-07-XX
Record Last Updated: 1997-02-04

Quad Summary: Inglewood (3311883/090A)
County Summary: Los Angeles

Lat/Long: 33.95930º / -118.35104º
UTM: Zone-11 N3758465 E375170
Mapping Precision: NON-SPECIFIC
Symbol Type: POINT
Radius: 1 mile

Township: 02S
Range: 14W
Section: XX **Qtr:** XX
Meridian: S
Elevation: 100 ft

Location: INGLEWOOD, NEAR LOS ANGELES.
Location Detail:
Ecological:
Threat:
General: ONLY SOURCE OF INFORMATION FOR THIS SITE IS 1905 COLLECTION BY HALL.
Owner/Manager: UNKNOWN

Centromadia parryi ssp. australis

southern tarplant **Element Code:** PDAST4R0P4

Status	NDDB Element Ranks	Other Lists
Federal: None	**Global:** G4T2	**CNPS List:** 1B.1
State: None	**State:** S2.1	

Habitat Associations

General: MARSHES AND SWAMPS (MARGINS), VALLEY AND FOOTHILL GRASSLAND.

Micro: OFTEN IN DISTURBED SITES NEAR THE COAST AT MARSH EDGES; ALSO IN ALKALINE SOILS SOMETIMES WITH SALTGRASS. SOMETIMES ON V

Occurrence No. 31 **Map Index:** 28743 **EO Index:** 30041

Occ Rank: None
Origin: Natural/Native occurrence
Presence: Extirpated
Trend: Unknown

Dates Last Seen
Element: 1933-09-22
Site: 1997-10-19
Record Last Updated: 1998-08-27

Quad Summary: Inglewood (3311883/090A)
County Summary: Los Angeles

Lat/Long: 33.95803º / -118.26836º
UTM: Zone-11 N3758227 E382808
Mapping Precision: NON-SPECIFIC
Symbol Type: POINT
Radius: 2/5 mile

Township: 03S
Range: 13W
Section: XX **Qtr:** XX
Meridian: S
Elevation: 125 ft

Location: LOS ANGELES, VACANT LOT ON 87TH STREET NEAR AVALON BLVD.

Location Detail: MAPPED SOUTH OF MANCHESTER AVE & WEST OF AVALON BLVD IN LOS ANGELES. SITE AT 87TH STREET HAD BEEN CONVERTED INTO HOUSING TRACTS & APARTMENTS W/NEARBY GOLF COURSE & PARK WHEN VISITED BY GARDINER IN 1997.

Ecological:

Threat:

General: MAPPED BASED ON 1933 COLLECTION BY MCFADDEN. THIS SPECIMEN FOUND IN H. PUNGENS FILE AT RSA AND TENTATIVELY IDENTIFIED TO H. PARRYI SSP AUSTRALIS BY D. BRAMLET (1990).

Owner/Manager: UNKNOWN

Centromadia parryi ssp. australis

southern tarplant

Element Code: PDAST4R0P4

Status	NDDB Element Ranks	Other Lists
Federal: None	**Global:** G4T2	**CNPS List:** 1B.1
State: None	**State:** S2.1	

Habitat Associations

General: MARSHES AND SWAMPS (MARGINS), VALLEY AND FOOTHILL GRASSLAND.

Micro: OFTEN IN DISTURBED SITES NEAR THE COAST AT MARSH EDGES; ALSO IN ALKALINE SOILS SOMETIMES WITH SALTGRASS. SOMETIMES ON V

Occurrence No. 37 **Map Index:** 35368 **EO Index:** 30042

Occ Rank: Fair
Origin: Natural/Native occurrence
Presence: Presumed Extant
Trend: Unknown

Dates Last Seen
Element: 2001-08-22
Site: 2001-08-22
Record Last Updated: 2006-01-26

Quad Summary: Torrance (3311873/090D)
County Summary: Los Angeles

Lat/Long: 33.77749º / -118.29690º
UTM: Zone-11 N3738240 E379918
Mapping Precision: NON-SPECIFIC
Symbol Type: POLYGON
Area:

Township: 05S
Range: 14W
Section: 01 **Qtr:** XX
Meridian: S
Elevation: 20 ft

Location: AT HARBOR LAKE REGIONAL PARK & AT THE NAVAL DEFENSE FUEL SUPPORT POINT. LOS ANGELES.

Location Detail: 2 COLONIES. E COLONY IS SOUTHWEST OF LOS ANGELES HARBOR COLLEGE ALONG TRAILS. W COLONY MAPPED BY CNDDB TO COVER ALL OF THE DEFENSE FUEL SUPPORT POINT. NEED MAP DETAIL.

Ecological: IN NARROW STRIP BETWEEN LOWER MARSH AND MULE FAT / WILLOW ZONE. GROWS MAINLY WITH DISTICHLIS SPICATA IN ADDITION TO SALSOLA AUSTRALIS, BASSIA HYSSOPIFOLIA, BRASSICA NIGRA, HIRSCHFELDIA INCANA, ATRIPLEX SEMIBACCATA, ANNUAL GRASSES, ET AL.

Threat: TRAILS, SHELTERS FOR TRANSIENTS OCCUR IN AREA AROUND E COLONY. MILITARY OPERATIONS MAY EFFECT W COLONY.

General: 1500-2000 PLANTS ESTIMATED IN 1991 IN EAST COLONY. WEST COLONY MAPPED BASED ON TWO COLLECTIONS BY J. GEORGE, UNCERTAIN OF POPULATION NUMBERS OR WHERE PLANTS WERE FOUND WITHIN THE NAVAL RESERVATION.

Owner/Manager: DOD-NAVY, CITY OF LOS ANGELES

Centromadia parryi ssp. australis

southern tarplant **Element Code:** PDAST4R0P4

Status	NDDB Element Ranks	Other Lists
Federal: None	**Global:** G4T2	**CNPS List:** 1B.1
State: None	**State:** S2.1	

Habitat Associations

General: MARSHES AND SWAMPS (MARGINS), VALLEY AND FOOTHILL GRASSLAND.

Micro: OFTEN IN DISTURBED SITES NEAR THE COAST AT MARSH EDGES; ALSO IN ALKALINE SOILS SOMETIMES WITH SALTGRASS. SOMETIMES ON V

Occurrence No. 43 **Map Index:** 39583 **EO Index:** 34585

Occ Rank: Unknown
Origin: Natural/Native occurrence
Presence: Presumed Extant
Trend: Unknown

Dates Last Seen
Element: 1997-11-13
Site: 1997-11-13
Record Last Updated: 1998-08-31

Quad Summary: Torrance (3311873/090D)
County Summary: Los Angeles

Lat/Long: 33.82705º / -118.34240º
UTM: Zone-11 N3743790 E375777
Mapping Precision: NON-SPECIFIC
Symbol Type: POLYGON
Area:

Township: 04S
Range: 14W
Section: 15 **Qtr:** SW
Meridian: S
Elevation: 75 ft

Location: MADRONA MARSH NATURE PRESERVE, NORTH OF SEPULVEDA BLVD, BETWEEN MAPLE AVE AND MADRONA AVENUE.

Location Detail:

Ecological: ALONG THE INNER AND OUTER EDGES OF SEVERAL LARGE VERNAL POOLS.

Threat:

General: SEVERAL THOUSAND PLANTS IN 1997.

Owner/Manager: CITY OF TORRENCE-MADRONA MARSH

Centromadia parryi ssp. australis

southern tarplant

Element Code: PDAST4R0P4

Status	NDDB Element Ranks	Other Lists
Federal: None	**Global:** G4T2	**CNPS List:** 1B.1
State: None	**State:** S2.1	

Habitat Associations

General: MARSHES AND SWAMPS (MARGINS), VALLEY AND FOOTHILL GRASSLAND.

Micro: OFTEN IN DISTURBED SITES NEAR THE COAST AT MARSH EDGES; ALSO IN ALKALINE SOILS SOMETIMES WITH SALTGRASS. SOMETIMES ON V

Occurrence No. 44 **Map Index:** 39586 **EO Index:** 34588

Occ Rank: Unknown
Origin: Natural/Native occurrence
Presence: Presumed Extant
Trend: Unknown

Dates Last Seen
Element: 1997-10-10
Site: 1997-10-10
Record Last Updated: 1998-08-31

Quad Summary: Los Alamitos (3311871/089D)
County Summary: Los Angeles

Lat/Long: 33.76684º / -118.10420º
UTM: Zone-11 N3736852 E397749
Mapping Precision: NON-SPECIFIC
Symbol Type: POINT
Radius: 1/10 mile

Township: 05S
Range: 12W
Section: 02 **Qtr:** XX
Meridian: S
Elevation: 10 ft

Location: LOYNES DRIVE AND STUDEBAKER AVENUE, WEST OF BRIDGE THAT CROSSES LOS CERRITOS CHANNEL.
Location Detail:
Ecological:
Threat:
General: UNKNOWN HOW MANY PLANTS SEEN IN 1997.
Owner/Manager: UNKNOWN

Centromadia parryi ssp. australis

southern tarplant

Element Code: PDAST4R0P4

Status	NDDB Element Ranks	Other Lists
Federal: None	**Global:** G4T2	**CNPS List:** 1B.1
State: None	**State:** S2.1	

Habitat Associations

General: MARSHES AND SWAMPS (MARGINS), VALLEY AND FOOTHILL GRASSLAND.

Micro: OFTEN IN DISTURBED SITES NEAR THE COAST AT MARSH EDGES; ALSO IN ALKALINE SOILS SOMETIMES WITH SALTGRASS. SOMETIMES ON V

Occurrence No. 45 **Map Index:** 39587 **EO Index:** 34589

Occ Rank: Fair
Origin: Natural/Native occurrence
Presence: Presumed Extant
Trend: Unknown

Dates Last Seen
Element: 2004-07-13
Site: 2004-07-13
Record Last Updated: 2006-01-26

Quad Summary: Los Alamitos (3311871/089D), Seal Beach (3311861/072A)

County Summary: Los Angeles, Orange

Lat/Long: 33.75334º / -118.09996º
UTM: Zone-11 N3735351 E398125
Mapping Precision: SPECIFIC
Symbol Type: POLYGON
Area: 208.8 acres

Township: 05S
Range: 12W
Section: 11 **Qtr:** XX
Meridian: S
Elevation: 10 ft

Location: ALONG BOTH SIDES OF THE SAN GABRIEL CHANNEL, NEAR ITS MOUTH.

Location Detail: MAPPED BY CNDDB AS 5 COLONIES. NORTHERN THREE COLONIES ARE WITHIN THE BIXBY RANCH OIL FIELD. WESTERN COLONY IS AT THE INTERSECTION OF HWY 1 & STUDEBAKER RD. SE COLONY MAPPED BASED ON NON-SPECIFIC SITE INFO FROM A COLLECTION.

Ecological: DISTURBED ALKALI MEADOW AND RUDERAL GRASSLAND WITH BASSIA HYSSOPIFOLIA, DISTICHLIS SPICATA, POLYPOGON MONSPELIENSIS, ASTER SUBULATUS, HELIOTROPIUM CURASSAVICUM, CRESSA TRUXELLENSIS, PICRIS ECHIOIDES, SALICORNIA VIRGINICA, FRANKENIA SALINA.

Threat: OIL FIELD IS PROPOSED FOR DEACTIVATION, CLEANUP, AND DEVELOPMENT. DEVELOPMENT PROPOSED WITHIN BOTH SOUTHERN COLONIES.

General: NORTHERN 3 COLONIES: 718 PLANTS IN 1996, 100 SEEN 1997. W COLONY: 100 PLANTS IN 2004. SE COLONY MAPPED BASED ON COLLECTION BY JONES & LOEFFLER, 3300 PLANTS OBSERVED HERE IN 1996. INCLUDES FORMER OCCURRENCES #46 & 51.

Owner/Manager: PVT

Centromadia parryi ssp. australis

southern tarplant **Element Code:** PDAST4R0P4

Status	NDDB Element Ranks	Other Lists
Federal: None	**Global:** G4T2	**CNPS List:** 1B.1
State: None	**State:** S2.1	

Habitat Associations

General: MARSHES AND SWAMPS (MARGINS), VALLEY AND FOOTHILL GRASSLAND.

Micro: OFTEN IN DISTURBED SITES NEAR THE COAST AT MARSH EDGES; ALSO IN ALKALINE SOILS SOMETIMES WITH SALTGRASS. SOMETIMES ON V

Occurrence No. 69 **Map Index:** 15949 **EO Index:** 53505

Occ Rank: Unknown
Origin: Natural/Native occurrence
Presence: Presumed Extant
Trend: Unknown

Dates Last Seen
Element: 1986-11-04
Site: 1986-11-04
Record Last Updated: 2006-01-26

Quad Summary: Seal Beach (3311861/072A)
County Summary: Orange

Lat/Long: 33.73977º / -118.07696º
UTM: Zone-11 N3733823 E400240
Mapping Precision: SPECIFIC
Symbol Type: POLYGON
Area: 800.0 acres

Township: 05S
Range: 12W
Section: 13 **Qtr:** XX
Meridian: S
Elevation:

Location: ANAHEIM BAY, NORTH OF HOG ISLAND, IN SEAL BEACH NAVAL WEAPONS STATION.

Location Detail: EXACT LOCATION UNKNOWN. MAPPED BY CNDDB AS BEST GUESS.

Ecological: ALONG ROADSIDE ON BERM ABOVE COASTAL SALT MARSH IN SILTY SOILS.

Threat:

General: HERBARIUM LABEL NOTED PLANTS HERE WERE ABUNDANT IN 1986. 1957 COLLECTION BY RAVEN FROM "NORTHERN LIMITS OF SURFSIDE" ALSO ATTRIBUTED HERE. NEEDS FIELDWORK.

Owner/Manager: USFWS-SEAL BEACH NWS, DOD

Centromadia parryi ssp. australis

southern tarplant **Element Code:** PDAST4R0P4

Status	NDDB Element Ranks	Other Lists
Federal: None	**Global:** G4T2	**CNPS List:** 1B.1
State: None	**State:** S2.1	

Habitat Associations

General: MARSHES AND SWAMPS (MARGINS), VALLEY AND FOOTHILL GRASSLAND.

Micro: OFTEN IN DISTURBED SITES NEAR THE COAST AT MARSH EDGES; ALSO IN ALKALINE SOILS SOMETIMES WITH SALTGRASS. SOMETIMES ON V

Occurrence No. 76 **Map Index:** 63805 **EO Index:** 63900

Occ Rank: Unknown
Origin: Natural/Native occurrence
Presence: Presumed Extant
Trend: Unknown

Dates Last Seen
Element: 1962-09-23
Site: 1962-09-23
Record Last Updated: 2006-01-26

Quad Summary: Seal Beach (3311861/072A)
County Summary: Orange

Lat/Long: 33.74314º / -118.09999º
UTM: Zone-11 N3734220 E398110
Mapping Precision: NON-SPECIFIC
Symbol Type: POINT
Radius: 1/10 mile

Township: 05S
Range: 12W
Section: 14 **Qtr:** N
Meridian: S
Elevation: 5 ft

Location: ALONG PACIFIC COAST HIGHWAY AND BALBOA DRIVE, ABOUT 1 MILE SOUTH OF LOS ANGELES/ORANGE COUNTY LINE.

Location Detail:
Ecological:
Threat:
General: ONLY SOURCE OF INFORMATION FOR THIS OCCURRENCE IS A 1962 COLLECTION BY KYHOS. NEEDS FIELDWORK.
Owner/Manager: UNKNOWN

Chaenactis glabriuscula var. orcuttiana

Orcutt's pincushion

Element Code: PDAST20095

Status	NDDB Element Ranks	Other Lists
Federal: None	**Global:** G5T3	**CNPS List:** 1B.1
State: None	**State:** S2.1	

Habitat Associations

General: COASTAL BLUFF SCRUB, COASTAL DUNES.

Micro: SANDY SITES. 3-100M.

Occurrence No. 20 **Map Index:** 47545 **EO Index:** 47545

Occ Rank: Unknown
Origin: Natural/Native occurrence
Presence: Presumed Extant
Trend: Unknown

Dates Last Seen
Element: 1929-05-20
Site: 1929-05-20

Record Last Updated: 2002-04-03

Quad Summary: Redondo Beach (3311874/090C), Venice (3311884/090B)

County Summary: Los Angeles

Lat/Long: 33.88678º / -118.39645º
UTM: Zone-11 N3750480 E370865
Mapping Precision: NON-SPECIFIC
Symbol Type: POINT
Radius: 1 mile

Township: 03S
Range: 14W
Section: 30 **Qtr:** XX
Meridian: S
Elevation:

Location: MANHATTAN BEACH.
Location Detail:
Ecological:
Threat: THREATENED BY COASTAL DEVELOPMENT?
General: NEEDS FIELDWORK.
Owner/Manager: UNKNOWN

Charadrius alexandrinus nivosus

western snowy plover **Element Code:** ABNNB03031

Status
Federal: Threatened
State: None

NDDB Element Ranks
Global: G4T3
State: S2

Other Lists
CDFG Status: SC

Habitat Associations
General: SANDY BEACHES, SALT POND LEVEES & SHORES OF LARGE ALKALI LAKES.
Micro: NEEDS SANDY, GRAVELLY OR FRIABLE SOILS FOR NESTING.

Occurrence No. 11 **Map Index:** 15986 **EO Index:** 25770

Occ Rank: None
Origin: Natural/Native occurrence
Presence: Extirpated
Trend: Unknown

Dates Last Seen
Element: 1971-07-22
Site: 1971-07-22
Record Last Updated: 1998-10-06

Quad Summary: Seal Beach (3311861/072A)
County Summary: Orange

Lat/Long: 33.72858º / -118.07652º
UTM: Zone-11 N3732582 E400268
Mapping Precision: NON-SPECIFIC
Symbol Type: POLYGON
Area:

Township: 05S
Range: 11W
Section: 19 **Qtr:** S
Meridian: S
Elevation: 10 ft

Location: SUNSET AQUATIC PARK, HUNTINGTON BEACH.
Location Detail:
Ecological: SANDY, LANDFILL BEACH.
Threat:
General: SEVERAL NESTS OBSERVED ON LANDFILL BEACH BETWEEN 7 JUL & 1 AUG 1970, & 25 MAY & 22 JUL 1971. NESTING WAS SUCCESSFUL BOTH YEARS WITH SEVERAL CHICKS OBSERVED. FROM NORTH AMERICAN NEST RECORD CARD PROGRAM.
Owner/Manager: ORANGE COUNTY

Charadrius alexandrinus nivosus

western snowy plover

Element Code: ABNNB03031

Status

Federal: Threatened
State: None

NDDB Element Ranks

Global: G4T3
State: S2

Other Lists

CDFG Status: SC

Habitat Associations

General: SANDY BEACHES, SALT POND LEVEES & SHORES OF LARGE ALKALI LAKES.
Micro: NEEDS SANDY, GRAVELLY OR FRIABLE SOILS FOR NESTING.

Occurrence No. 32 **Map Index:** 02271 **EO Index:** 7325

Occ Rank: None
Origin: Natural/Native occurrence
Presence: Extirpated
Trend: Unknown

Dates Last Seen

Element: 1916-XX-XX
Site: 1916-XX-XX

Record Last Updated: 1998-10-06

Quad Summary: Seal Beach (3311861/072A)
County Summary: Orange

Lat/Long: 33.72117º / -118.07728º
UTM: Zone-11 N3731761 E400189
Mapping Precision: NON-SPECIFIC
Symbol Type: POLYGON
Area:

Township: 05S
Range: 11W
Section: 19 **Qtr:** XX
Meridian: S
Elevation: 10 ft

Location: SUNSET BEACH.
Location Detail:
Ecological:
Threat:
General: ONE MUSEUM EGG SET COLLECTED IN 1916.
Owner/Manager: UNKNOWN

Charadrius alexandrinus nivosus

western snowy plover

Element Code: ABNNB03031

Status

Federal: Threatened
State: None

NDDB Element Ranks

Global: G4T3
State: S2

Other Lists

CDFG Status: SC

Habitat Associations

General: SANDY BEACHES, SALT POND LEVEES & SHORES OF LARGE ALKALI LAKES.
Micro: NEEDS SANDY, GRAVELLY OR FRIABLE SOILS FOR NESTING.

Occurrence No. 33 **Map Index:** 36768 **EO Index:** 1003

Occ Rank: None
Origin: Natural/Native occurrence
Presence: Extirpated
Trend: Unknown

Dates Last Seen

Element: 1907-XX-XX
Site: 1978-XX-XX

Record Last Updated: 1998-10-08

Quad Summary: Seal Beach (3311861/072A)
County Summary: Orange

Lat/Long: 33.73790º / -118.10005º
UTM: Zone-11 N3733638 E398099
Mapping Precision: NON-SPECIFIC
Symbol Type: POINT
Radius: 1/5 mile

Township: 05S
Range: 12W
Section: 14 **Qtr:** XX
Meridian: S
Elevation: 10 ft

Location: ANAHEIM LANDING. AT THE MOUTH OF ANAHEIM BAY.
Location Detail:
Ecological: HABITAT RENDERED UNSUITABLE BY HUMAN ACTIVITY/DEVELOPMENT.
Threat:
General: ONE MUSEUM EGG SET COLLECTED IN 1907.
Owner/Manager: DOD-ANAHEIM LANDING

Cicindela gabbii

western tidal-flat tiger beetle

Element Code: IICOL02080

Status	NDDB Element Ranks	Other Lists
Federal: None	**Global:** G4	**CDFG Status:**
State: None	**State:** S1	

Habitat Associations

General: INHABITS ESTUARIES AND MUDFLATS ALONG THE COAST OF SOUTHERN CALIFORNIA.

Micro: GENERALLY FOUND ON DARK-COLORED MUD IN THE LOWER ZONE; OCCASIONALLY FOUND ON DRY SALINE FLATS OF ESTUARIES.

* SENSITIVE *

Occurrence No. 1 **Map Index:** 72493 **EO Index:** 2504

Occ Rank: Unknown
Origin: Natural/Native occurrence
Presence: Presumed Extant
Trend: Unknown

Dates Last Seen
Element: 1998-07-11
Site: 1998-07-11
Record Last Updated: 2008-10-08

Quad Summary: Seal Beach (3311861/072A), Los Alamitos (3311871/089D)

County Summary: Orange

* SENSITIVE *

Lat/Long:
UTM:
Mapping Precision:
Symbol Type:
Radius:

Township:
Range:
Section: **Qtr:**
Meridian:
Elevation:

Location: *SENSITIVE* Location information suppressed.

Location Detail: Please contact the California Natural Diversity Database, California Department of Fish and Game, for more information:
(916) 324-3812.

Ecological:
Threat:
General:
Owner/Manager:

Cicindela gabbii

western tidal-flat tiger beetle

Element Code: IICOL02080

Status	NDDB Element Ranks	Other Lists
Federal: None	**Global:** G4	**CDFG Status:**
State: None	**State:** S1	

Habitat Associations

General: INHABITS ESTUARIES AND MUDFLATS ALONG THE COAST OF SOUTHERN CALIFORNIA.

Micro: GENERALLY FOUND ON DARK-COLORED MUD IN THE LOWER ZONE; OCCASIONALLY FOUND ON DRY SALINE FLATS OF ESTUARIES.

Occurrence No. 10 **Map Index:** 02386 **EO Index:** 22682

Occ Rank: None
Origin: Natural/Native occurrence
Presence: Extirpated
Trend: Unknown

Dates Last Seen
Element: XXXX-XX-XX
Site: XXXX-XX-XX

Record Last Updated: 2008-09-02

Quad Summary: Newport Beach (3311768/071B), Seal Beach (3311861/072A)

County Summary: Orange

Lat/Long: 33.65636º / -118.00298º
UTM: Zone-11 N3724506 E407003
Mapping Precision: NON-SPECIFIC
Symbol Type: POLYGON
Area:

Township: 06S
Range: 11W
Section: 14 **Qtr:** XX
Meridian: S
Elevation: 5 ft

Location: HUNTINGTON BEACH.
Location Detail:
Ecological:
Threat:
General: HISTORICAL COLLECTION LOCALITY; CONSIDERED EXTIRPATED AT THIS SITE.
Owner/Manager: DPR-BOLSA CHICA SB, UNKNOWN

Cicindela gabbii

western tidal-flat tiger beetle

Element Code: IICOL02080

Status	NDDB Element Ranks	Other Lists
Federal: None	**Global:** G4	**CDFG Status:**
State: None	**State:** S1	

Habitat Associations

General: INHABITS ESTUARIES AND MUDFLATS ALONG THE COAST OF SOUTHERN CALIFORNIA.

Micro: GENERALLY FOUND ON DARK-COLORED MUD IN THE LOWER ZONE; OCCASIONALLY FOUND ON DRY SALINE FLATS OF ESTUARIES.

Occurrence No. 13 **Map Index:** 36770 **EO Index:** 22679

Occ Rank: None
Origin: Natural/Native occurrence
Presence: Extirpated
Trend: Unknown

Dates Last Seen
Element: XXXX-XX-XX
Site: XXXX-XX-XX

Record Last Updated: 2008-09-02

Quad Summary: Seal Beach (3311861/072A)
County Summary: Orange

Lat/Long: 33.71167º / -118.05140º
UTM: Zone-11 N3730683 E402576
Mapping Precision: NON-SPECIFIC
Symbol Type: POINT
Radius: 3/5 mile

Township: 05S
Range: 11W
Section: 29 **Qtr:** XX
Meridian: S
Elevation:

Location: LOS PLATOS (LOS PATOS?) NEAR SUNSET BEACH.
Location Detail:
Ecological:
Threat:
General: HISTORICAL COLLECTION LOCALITY; CONSIDERED EXTIRPATED AT THIS SITE.
Owner/Manager: DFG-BOLSA CHICA ER

Cicindela hirticollis gravida

sandy beach tiger beetle

Element Code: IICOL02101

Status	NDDB Element Ranks	Other Lists
Federal: None	**Global:** G5T2	**CDFG Status:**
State: None	**State:** S1	

Habitat Associations

General: INHABITS AREAS ADJACENT TO NON-BRACKISH WATER ALONG THE COAST OF CALIFORNIA FROM SAN FRANCISCO BAY TO NORTHERN MEXICO.

Micro: CLEAN, DRY, LIGHT-COLORED SAND IN THE UPPER ZONE. SUBTERRANEAN LARVAE PREFER MOIST SAND NOT AFFECTED BY WAVE ACTION.

Occurrence No. 11 **Map Index:** 36918 **EO Index:** 758

Occ Rank: None
Origin: Natural/Native occurrence
Presence: Extirpated
Trend: Unknown

Dates Last Seen
Element: XXXX-XX-XX
Site: 1979-XX-XX

Record Last Updated: 2005-02-18

Quad Summary: Redondo Beach (3311874/090C)
County Summary: Los Angeles

Lat/Long: 33.82920º / -118.39055º
UTM: Zone-11 N3744087 E371324
Mapping Precision: NON-SPECIFIC
Symbol Type: POLYGON
Area:

Township: 04S
Range: 14W
Section: 18 **Qtr:** XX
Meridian: S
Elevation: 12 ft

Location: REDONDO BEACH.
Location Detail:
Ecological: INHABITED CLEAN, DRY, LIGHT-COLORED SAND IN THE UPPER ZONE.
Threat: SENSITIVE TO CONTACT WITH HUMANS.
General: HISTORICAL LOCATION.
Owner/Manager: DPR-REDONDO SB

Cicindela hirticollis gravida

sandy beach tiger beetle

Element Code: IICOL02101

Status	NDDB Element Ranks	Other Lists
Federal: None	**Global:** G5T2	**CDFG Status:**
State: None	**State:** S1	

Habitat Associations

General: INHABITS AREAS ADJACENT TO NON-BRACKISH WATER ALONG THE COAST OF CALIFORNIA FROM SAN FRANCISCO BAY TO NORTHERN MEXICO.

Micro: CLEAN, DRY, LIGHT-COLORED SAND IN THE UPPER ZONE. SUBTERRANEAN LARVAE PREFER MOIST SAND NOT AFFECTED BY WAVE ACTION.

Occurrence No. 13 **Map Index:** 02010 **EO Index:** 12878

Occ Rank: None
Origin: Natural/Native occurrence
Presence: Extirpated
Trend: Unknown

Dates Last Seen
Element: XXXX-XX-XX
Site: 1979-XX-XX

Record Last Updated: 1993-01-27

Quad Summary: Long Beach (3311872/089C), San Pedro (3311863/073A), Torrance (3311873/090D)

County Summary: Los Angeles

Lat/Long: 33.74851º / -118.25243º
UTM: Zone-11 N3734976 E383997
Mapping Precision: NON-SPECIFIC
Symbol Type: POINT
Radius: 1 mile

Township: 05S
Range: 13W
Section: XX **Qtr:** XX
Meridian: S
Elevation: 16 ft

Location: TERMINAL ISLAND.

Location Detail:

Ecological: INHABITED CLEAN, DRY, LIGHT-COLORED SAND IN THE UPPER ZONE.

Threat: SENSITIVE TO CONTACT WITH HUMANS.

General: HISTORICAL LOCATION.

Owner/Manager: UNKNOWN

Cicindela hirticollis gravida

sandy beach tiger beetle

Element Code: IICOL02101

Status	NDDB Element Ranks	Other Lists
Federal: None	**Global:** G5T2	**CDFG Status:**
State: None	**State:** S1	

Habitat Associations

General: INHABITS AREAS ADJACENT TO NON-BRACKISH WATER ALONG THE COAST OF CALIFORNIA FROM SAN FRANCISCO BAY TO NORTHERN MEXICO.

Micro: CLEAN, DRY, LIGHT-COLORED SAND IN THE UPPER ZONE. SUBTERRANEAN LARVAE PREFER MOIST SAND NOT AFFECTED BY WAVE ACTION.

Occurrence No. 15 **Map Index:** 02201 **EO Index:** 22672

Occ Rank: None
Origin: Natural/Native occurrence
Presence: Extirpated
Trend: Unknown

Dates Last Seen
Element: XXXX-XX-XX
Site: 1979-XX-XX

Record Last Updated: 1998-10-20

Quad Summary: Los Alamitos (3311871/089D), Long Beach (3311872/089C)
County Summary: Los Angeles

Lat/Long: 33.75578º / -118.12246º
UTM: Zone-11 N3735643 E396045
Mapping Precision: NON-SPECIFIC
Symbol Type: POLYGON
Area:

Township: 05S
Range: 12W
Section: 10 **Qtr:** XX
Meridian: S
Elevation: 10 ft

Location: NAPLES.
Location Detail:
Ecological: INHABITED CLEAN, DRY, LIGHT-COLORED SAND IN THE UPPER ZONE.
Threat: SENSITIVE TO CONTACT WITH HUMANS.
General: HISTORICAL LOCATION.
Owner/Manager: UNKNOWN

Cicindela hirticollis gravida

sandy beach tiger beetle

Element Code: IICOL02101

Status	NDDB Element Ranks	Other Lists
Federal: None	**Global:** G5T2	**CDFG Status:**
State: None	**State:** S1	

Habitat Associations

General: INHABITS AREAS ADJACENT TO NON-BRACKISH WATER ALONG THE COAST OF CALIFORNIA FROM SAN FRANCISCO BAY TO NORTHERN MEXICO.

Micro: CLEAN, DRY, LIGHT-COLORED SAND IN THE UPPER ZONE. SUBTERRANEAN LARVAE PREFER MOIST SAND NOT AFFECTED BY WAVE ACTION.

Occurrence No. 33 **Map Index:** 60073 **EO Index:** 60109

Occ Rank: None
Origin: Natural/Native occurrence
Presence: Extirpated
Trend: Unknown

Dates Last Seen
Element: 1945-08-15
Site: 1945-08-15

Record Last Updated: 2005-02-17

Quad Summary: Seal Beach (3311861/072A), Los Alamitos (3311871/089D), Long Beach (3311872/089C)

County Summary: Los Angeles

Lat/Long: 33.75431º / -118.12182º
UTM: Zone-11 N3735480 E396101
Mapping Precision: NON-SPECIFIC
Symbol Type: POINT
Radius: 3/5 mile

Township: 05S
Range: 12W
Section: 10 **Qtr:** XX
Meridian: S
Elevation: 10 ft

Location: ALAMITOS BAY.
Location Detail:
Ecological:
Threat:
General: HISTORICAL RECORD.
Owner/Manager: UNKNOWN

Cicindela latesignata latesignata

western beach tiger beetle

Element Code: IICOL02113

Status

Federal: None
State: None

NDDB Element Ranks

Global: G4T1T2
State: S1

Other Lists

CDFG Status:

Habitat Associations

General: MUDFLATS AND BEACHES IN COASTAL SOUTHERN CALIFORNIA.
Micro:

Occurrence No. 5 **Map Index:** 60935 **EO Index:** 60971

Occ Rank: None
Origin: Natural/Native occurrence
Presence: Extirpated
Trend: Unknown

Dates Last Seen

Element: XXXX-XX-XX
Site: XXXX-XX-XX

Record Last Updated: 2005-04-12

Quad Summary: Long Beach (3311872/089C), Seal Beach (3311861/072A), Los Alamitos (3311871/089D)
County Summary: Los Angeles

Lat/Long: 33.76188º / -118.16108º
UTM: Zone-11 N3736360 E392475
Mapping Precision: NON-SPECIFIC
Symbol Type: POLYGON
Area:

Township: 05S
Range: 12W
Section: 08 **Qtr:** XX
Meridian: S
Elevation: 20 ft

Location: LONG BEACH.
Location Detail: MAPPED ALONG BEACH AS THIS BEETLE PREFERS SANDY AREAS.
Ecological:
Threat:
General: HISTORICAL LOCALITY.
Owner/Manager: UNKNOWN

Cicindela latesignata latesignata

western beach tiger beetle

Element Code: IICOL02113

Status

Federal: None
State: None

NDDB Element Ranks

Global: G4T1T2
State: S1

Other Lists

CDFG Status:

Habitat Associations

General: MUDFLATS AND BEACHES IN COASTAL SOUTHERN CALIFORNIA.
Micro:

Occurrence No. 8 **Map Index:** 02386 **EO Index:** 60961

Occ Rank: None
Origin: Natural/Native occurrence
Presence: Extirpated
Trend: Unknown

Dates Last Seen

Element: XXXX-XX-XX
Site: XXXX-XX-XX

Record Last Updated: 2005-04-12

Quad Summary: Newport Beach (3311768/071B), Seal Beach (3311861/072A)
County Summary: Orange

Lat/Long: 33.65636º / -118.00298º
UTM: Zone-11 N3724506 E407003
Mapping Precision: NON-SPECIFIC
Symbol Type: POLYGON
Area:

Township: 06S
Range: 11W
Section: 14 **Qtr:** XX
Meridian: S
Elevation: 5 ft

Location: HUNTINGTON BEACH.
Location Detail: ALSO RECORDED "NORTH OF HUNTINGTON BEACH."
Ecological:
Threat:
General: HISTORICAL LOCALITIES.
Owner/Manager: DPR-BOLSA CHICA SB, UNKNOWN

Cicindela latesignata latesignata

western beach tiger beetle

Element Code: IICOL02113

Status

Federal: None
State: None

NDDB Element Ranks

Global: G4T1T2
State: S1

Other Lists

CDFG Status:

Habitat Associations

General: MUDFLATS AND BEACHES IN COASTAL SOUTHERN CALIFORNIA.
Micro:

Occurrence No. 9 **Map Index:** 60915 **EO Index:** 60951

Occ Rank: None
Origin: Natural/Native occurrence
Presence: Extirpated
Trend: Unknown

Dates Last Seen

Element: XXXX-XX-XX
Site: XXXX-XX-XX

Record Last Updated: 2005-04-11

Quad Summary: Seal Beach (3311861/072A)
County Summary: Orange

Lat/Long: 33.70347º / -118.05353º
UTM: Zone-11 N3729776 E402369
Mapping Precision: SPECIFIC
Symbol Type: POLYGON
Area: 40.6 acres

Township: 05S
Range: 11W
Section: 32 **Qtr:** XX
Meridian: S
Elevation: 10 ft

Location: BOLSA CHICA BAY.
Location Detail:
Ecological:
Threat:
General: HISTORICAL LOCALITY.
Owner/Manager: DFG-BOLSA CHICA ER

Cicindela latesignata latesignata

western beach tiger beetle

Element Code: IICOL02113

Status

Federal: None
State: None

NDDB Element Ranks

Global: G4T1T2
State: S1

Other Lists

CDFG Status:

Habitat Associations

General: MUDFLATS AND BEACHES IN COASTAL SOUTHERN CALIFORNIA.
Micro:

Occurrence No. 10 **Map Index:** 02237 **EO Index:** 60950

Occ Rank: None
Origin: Natural/Native occurrence
Presence: Extirpated
Trend: Unknown

Dates Last Seen

Element: XXXX-XX-XX
Site: XXXX-XX-XX

Record Last Updated: 2005-04-11

Quad Summary: Los Alamitos (3311871/089D), Seal Beach (3311861/072A)
County Summary: Orange, Los Angeles

Lat/Long: 33.74423º / -118.10420º
UTM: Zone-11 N3734344 E397722
Mapping Precision: NON-SPECIFIC
Symbol Type: POINT
Radius: 3/5 mile

Township: 05S
Range: 12W
Section: 14 **Qtr:** XX
Meridian: S
Elevation: 20 ft

Location: SEAL BEACH.
Location Detail:
Ecological:
Threat:
General: HISTORICAL LOCALITY.
Owner/Manager: UNKNOWN

Cicindela senilis frosti

senile tiger beetle

Element Code: IICOL02121

Status	NDDB Element Ranks	Other Lists
Federal: None	**Global:** G4T1	**CDFG Status:**
State: None	**State:** S1	

Habitat Associations

General: INHABITS MARINE SHORELINE, FROM CENTRAL CALIFORNIA COAST SOUTH TO SALT MARSHES OF SAN DIEGO. ALSO FOUND AT LAKE ELSINORE

Micro: INHABITS DARK-COLORED MUD IN THE LOWER ZONE AND DRIED SALT PANS IN THE UPPER ZONE.

Occurrence No. 5 **Map Index:** 02237 **EO Index:** 22659

Occ Rank: None
Origin: Natural/Native occurrence
Presence: Extirpated
Trend: Unknown

Dates Last Seen
Element: XXXX-XX-XX
Site: 1979-XX-XX

Record Last Updated: 2005-04-14

Quad Summary: Los Alamitos (3311871/089D), Seal Beach (3311861/072A)

County Summary: Orange, Los Angeles

Lat/Long: 33.74423º / -118.10420º
UTM: Zone-11 N3734344 E397722
Mapping Precision: NON-SPECIFIC
Symbol Type: POINT
Radius: 3/5 mile

Township: 05S
Range: 12W
Section: 14 **Qtr:** XX
Meridian: S
Elevation: 20 ft

Location: SEAL BEACH.

Location Detail: THE BEETLE WAS RESTRICTED TO SPECIFIC, HARD-TO-LOCATE AREAS WITHIN THE MARINE SALT MARSH.

Ecological: THE BEETLE'S FLIGHT PERIOD IS BIMODAL - IN EARLY SPRING AND LATE FALL.

Threat:

General: UNCOMMONLY COLLECTED BECAUSE POPULATIONS NATURALLY EXIST AT VERY LOW LEVELS. HISTORICAL LOCATION.

Owner/Manager: UNKNOWN

Coccyzus americanus occidentalis

western yellow-billed cuckoo

Element Code: ABNRB02022

Status

Federal: Candidate
State: Endangered

NDDB Element Ranks

Global: G5T3Q
State: S1

Other Lists

CDFG Status:

Habitat Associations

General: RIPARIAN FOREST NESTER, ALONG THE BROAD, LOWER FLOOD-BOTTOMS OF LARGER RIVER SYSTEMS.

Micro: NESTS IN RIPARIAN JUNGLES OF WILLOW, OFTEN MIXED WITH COTTONWOODS, W/ LOWER STORY OF BLACKBERRY, NETTLES, OR WILD GRAPE.

Occurrence No. 72 **Map Index:** 02238 **EO Index:** 13009

Occ Rank: None
Origin: Natural/Native occurrence
Presence: Extirpated
Trend: Unknown

Dates Last Seen

Element: 1912-06-22
Site: 1912-06-22

Record Last Updated: 1998-10-23

Quad Summary: Whittier (3311881/089A), Los Alamitos (3311871/089D)

County Summary: Los Angeles

Lat/Long: 33.86494º / -118.10442º
UTM: Zone-11 N3747729 E397845
Mapping Precision: NON-SPECIFIC
Symbol Type: POLYGON
Area:

Township: 03S
Range: 12W
Section: 35 **Qtr:** W
Meridian: S
Elevation: 60 ft

Location: SAN GABRIEL RIVER NEAR ARTESIA.
Location Detail:
Ecological:
Threat:
General: HISTORICALLY FAIRLY COMMON AND NESTING. WFVZ EGG SET.
Owner/Manager: PVT

Cordylanthus maritimus ssp. maritimus

salt marsh bird's-beak

Element Code: PDSCR0J0C2

Status	NDDB Element Ranks	Other Lists
Federal: Endangered	**Global:** G4?T2	**CNPS List:** 1B.2
State: Endangered	**State:** S2.1	

Habitat Associations

General: COASTAL SALT MARSH, COASTAL DUNES.

Micro: LIMITED TO THE HIGHER ZONES OF THE SALT MARSH HABITAT. 0-30M.

Occurrence No. 5 **Map Index:** 02270 **EO Index:** 2503

Occ Rank: Unknown
Origin: Natural/Native occurrence
Presence: Presumed Extant
Trend: Unknown

Dates Last Seen
Element: 1983-XX-XX
Site: 1983-XX-XX

Record Last Updated: 1996-01-05

Quad Summary: Seal Beach (3311861/072A), Los Alamitos (3311871/089D)

County Summary: Orange

Lat/Long: 33.73881º / -118.07696º
UTM: Zone-11 N3733717 E400239
Mapping Precision: NON-SPECIFIC
Symbol Type: POINT
Radius: 1 mile

Township: 05S
Range: 12W
Section: 18 **Qtr:** NW
Meridian: S
Elevation: 3 ft

Location: UPPER ANAHEIM BAY, SEAL BEACH.

Location Detail: EXACT LOCATION NOT KNOWN. MAPPED TO INCLUDE ENTIRE MARSH.

Ecological: SALTMARSH.

Threat:

General: ONE SMALL POPULATION OF LESS THAN 100 PLANTS EXISTS ACCORDING TO BIOME RENOVATORS (DUNN, 1983). RESTORATION PROJECT IS PLANNED. THIS OCCURRENCE INCLUDES HISTORIC COLLECTION FROM "ANAHEIM LANDING" BY FOSBERG (#53176 LAM).

Owner/Manager: UNKNOWN

Cordylanthus maritimus ssp. maritimus

salt marsh bird's-beak **Element Code:** PDSCR0J0C2

Status	NDDB Element Ranks	Other Lists
Federal: Endangered	**Global:** G4?T2	**CNPS List:** 1B.2
State: Endangered	**State:** S2.1	

Habitat Associations

General: COASTAL SALT MARSH, COASTAL DUNES.

Micro: LIMITED TO THE HIGHER ZONES OF THE SALT MARSH HABITAT. 0-30M.

Occurrence No. 6 **Map Index:** 23778 **EO Index:** 17521

Occ Rank: None
Origin: Natural/Native occurrence
Presence: Possibly Extirpated
Trend: Unknown

Dates Last Seen
Element: 1932-07-19
Site: 1981-XX-XX
Record Last Updated: 1998-11-09

Quad Summary: Seal Beach (3311861/072A)
County Summary: Orange

Lat/Long: 33.69572º / -118.03635º
UTM: Zone-11 N3728900 E403953
Mapping Precision: NON-SPECIFIC
Symbol Type: POLYGON
Area:

Township: 05S
Range: 11W
Section: XX **Qtr:** XX
Meridian: S
Elevation: 5 ft

Location: BOLSA MARSH (BOLSA CHICA), NORTHWEST OF HUNTINGTON BEACH.
Location Detail: EXACT LOCATION NOT KNOWN. MAPPED TO INCLUDE ENTIRE MARSH.
Ecological:
Threat:
General: MAIN SOURCE OF INFORMATION FOR THIS SITE IS 1932 COLLECTION BY BOOTH. SPECIES IS PRESUMED TO BE EXTIRPATED AT THIS SITE (FOX AND KNUDSEN, 1982).
Owner/Manager: DFG-BOLSA CHICA ER, PVT

Cordylanthus maritimus ssp. maritimus

salt marsh bird's-beak **Element Code:** PDSCR0J0C2

Status	NDDB Element Ranks	Other Lists
Federal: Endangered	**Global:** G4?T2	**CNPS List:** 1B.2
State: Endangered	**State:** S2.1	

Habitat Associations

General: COASTAL SALT MARSH, COASTAL DUNES.

Micro: LIMITED TO THE HIGHER ZONES OF THE SALT MARSH HABITAT. 0-30M.

Occurrence No. 12 **Map Index:** 27997 **EO Index:** 34952

Occ Rank: None
Origin: Natural/Native occurrence
Presence: Possibly Extirpated
Trend: Unknown

Dates Last Seen
Element: 1932-XX-XX
Site: 1932-XX-XX

Record Last Updated: 1998-10-16

Quad Summary: Long Beach (3311872/089C)

County Summary: Los Angeles

Lat/Long: 33.77120º / -118.18868º
UTM: Zone-11 N3737422 E389931
Mapping Precision: NON-SPECIFIC
Symbol Type: POINT
Radius: 1 mile

Township: 05S
Range: 13W
Section: 01 **Qtr:** XX
Meridian: S
Elevation: 20 ft

Location: LONG BEACH.

Location Detail: EXACT LOCATION NOT KNOWN; MAPPED IN GENERAL AREA OF LONG BEACH.

Ecological: SALT MARSH.

Threat:

General: THREE COLLECTIONS ATTRIBUTED TO THIS SITE: SNOW SN (RSA) SPRING 1932; MCCLATCHE SN (NY) JULY 1896; AND A. DAVIDSON SN (LAM) MAY 28, 1893.

Owner/Manager: UNKNOWN

Cordylanthus maritimus ssp. maritimus

salt marsh bird's-beak

Element Code: PDSCR0J0C2

Status	NDDB Element Ranks	Other Lists
Federal: Endangered	**Global:** G4?T2	**CNPS List:** 1B.2
State: Endangered	**State:** S2.1	

Habitat Associations

General: COASTAL SALT MARSH, COASTAL DUNES.

Micro: LIMITED TO THE HIGHER ZONES OF THE SALT MARSH HABITAT. 0-30M.

Occurrence No. 13 **Map Index:** 26479 **EO Index:** 6167

Occ Rank: None
Origin: Natural/Native occurrence
Presence: Possibly Extirpated
Trend: Unknown

Dates Last Seen
Element: 1901-05-25
Site: 1980-XX-XX

Record Last Updated: 1995-05-18

Quad Summary: Long Beach (3311872/089C), San Pedro (3311863/073A), Torrance (3311873/090D)

County Summary: Los Angeles

Lat/Long: 33.75713º / -118.23704º
UTM: Zone-11 N3735914 E385434
Mapping Precision: NON-SPECIFIC
Symbol Type: POINT
Radius: 1 mile

Township: 05S
Range: 13W
Section: XX **Qtr:** XX
Meridian: S
Elevation: 5 ft

Location: TERMINAL ISLAND, SAN PEDRO HARBOR.

Location Detail:

Ecological: SALINE MEADOWS.

Threat:

General: SITE KNOWN FROM 1901 COLLECTION BY GRANT. SPECIES IS PRESUMED EXTIRPATED AT THIS SITE (FOX AND KNUDSEN,1982).

Owner/Manager: UNKNOWN

Cordylanthus maritimus ssp. maritimus

salt marsh bird's-beak

Element Code: PDSCR0J0C2

Status	NDDB Element Ranks	Other Lists
Federal: Endangered	**Global:** G4?T2	**CNPS List:** 1B.2
State: Endangered	**State:** S2.1	

Habitat Associations

General: COASTAL SALT MARSH, COASTAL DUNES.

Micro: LIMITED TO THE HIGHER ZONES OF THE SALT MARSH HABITAT. 0-30M.

Occurrence No. 15 **Map Index:** 26480 **EO Index:** 3081

Occ Rank: None
Origin: Natural/Native occurrence
Presence: Possibly Extirpated
Trend: Unknown

Dates Last Seen
Element: 1924-08-29
Site: 1980-XX-XX

Record Last Updated: 1995-06-02

Quad Summary: Los Alamitos (3311871/089D)

County Summary: Orange, Los Angeles

Lat/Long: 33.83945º / -118.05455º
UTM: Zone-11 N3744855 E402429
Mapping Precision: NON-SPECIFIC
Symbol Type: POINT
Radius: 1 mile

Township: 04S
Range: 11W
Section: 08 **Qtr:** NW
Meridian: S
Elevation: 35 ft

Location: 2 MILES SOUTHEAST OF ARTESIA.

Location Detail: MAPPED IN CENTER OF SECTION.

Ecological: ALKALINE PASTURE.

Threat:

General: SITE KNOWN FROM 1924 COLLECTION BY JOHNSTON. SPECIES IS PRESUMED TO BE EXTIRPATED AT THIS SITE (FOX AND KNUDSEN, 1982).

Owner/Manager: UNKNOWN

Danaus plexippus

monarch butterfly

Element Code: IILEPP2010

Status	NDDB Element Ranks	Other Lists
Federal: None	**Global:** G5	**CDFG Status:**
State: None	**State:** S3	

Habitat Associations

General: WINTER ROOST SITES EXTEND ALONG THE COAST FROM NORTHERN MENDOCINO TO BAJA CALIFORNIA, MEXICO.

Micro: ROOSTS LOCATED IN WIND-PROTECTED TREE GROVES (EUCALYPTUS, MONTEREY PINE, CYPRESS), WITH NECTAR AND WATER SOURCES NEARBY.

Occurrence No. 203 **Map Index:** 36747 **EO Index:** 22797

Occ Rank: Unknown
Origin: Natural/Native occurrence
Presence: Presumed Extant
Trend: Unknown

Dates Last Seen
Element: 1989-03-XX
Site: 1989-03-XX

Record Last Updated: 1998-10-02

Quad Summary: Seal Beach (3311861/072A)

County Summary: Orange

Lat/Long: 33.70690º / -118.04528º
UTM: Zone-11 N3730149 E403138
Mapping Precision: SPECIFIC
Symbol Type: POLYGON
Area: 25.2 acres

Township: 05S
Range: 11W
Section: 28 **Qtr:** XX
Meridian: S
Elevation: 10 ft

Location: BOLSA CHICA ECOLOGICAL RESERVE. ABOUT 0.3 MI SOUTH OF INTERSECTION OF LOS PATOS AVE & BOLSA CHICA ST.

Location Detail:

Ecological: EUCALYPTUS GROVE ALONG THE ENTRANCE ROAD OF THE OIL PROPERTY. SPARSE UNDERSTORY OF MYOPORUM, PRICKLY PEAR, BLADDER POD, COULTER SALTBUSH & TOBACCO TREE.

Threat:

General: MONARCHS OBS ANNUALLY 1958-70 BY RUBBERT, USUALLY PERSISTING THROUGH WINTER. FLYING MONARCHS COMMON OCT 1988 THROUGH JAN 1989. 55 COUNTED ON ONE DAY IN OCT. 1 TREE FOUND WITH SEVERAL CLINGING MONARCHS. OCCASIONAL SIGHTINGS THROUGH MAR 1989.

Owner/Manager: DFG-BOLSA CHICA ER

Danaus plexippus

monarch butterfly

Element Code: IILEPP2010

Status	NDDB Element Ranks	Other Lists
Federal: None	**Global:** G5	**CDFG Status:**
State: None	**State:** S3	

Habitat Associations

General: WINTER ROOST SITES EXTEND ALONG THE COAST FROM NORTHERN MENDOCINO TO BAJA CALIFORNIA, MEXICO.

Micro: ROOSTS LOCATED IN WIND-PROTECTED TREE GROVES (EUCALYPTUS, MONTEREY PINE, CYPRESS), WITH NECTAR AND WATER SOURCES NEARBY.

Occurrence No. 218 **Map Index:** 17190 **EO Index:** 12042

Occ Rank: Fair
Origin: Natural/Native occurrence
Presence: Presumed Extant
Trend: Unknown

Dates Last Seen
Element: 1998-11-08
Site: 1998-11-08
Record Last Updated: 2002-05-06

Quad Summary: Long Beach (3311872/089C)
County Summary: Los Angeles

Lat/Long: 33.83102º / -118.13229º
UTM: Zone-11 N3743996 E395225
Mapping Precision: SPECIFIC
Symbol Type: POINT
Radius: 80 meters

Township: 04S
Range: 12W
Section: XX **Qtr:** XX
Meridian: S
Elevation: 38 ft

Location: HEARTWELL PARK, JUST SE OF THE INTERSECTION OF CARSON STREET AND CLARK AVENUE, LONG BEACH

Location Detail: LOCATED JUST SOUTH OF THE RESTROOMS IN HEARTWELL PARK.

Ecological: ROOST TREES CONSIST OF A CIRCULAR GROVE OF INTRODUCED (MONTEREY?) PINES, MANICURED IN "LOLLIPOP" FASHION.

Threat: POSSIBLE THREATS INCLUDE PRUNING OF TREES.

General: PREVIOUSLY THOUGHT TO BE A TEMPORARY SITE; IN 1989, MONARCHS PERSISTED ALL SEASON, MAKING THIS A SMALL PERMANENT SITE. 200+ OBSERVED ON 23 DEC 1989. NONE IN FALL 1992-93. NONE IN NOV 1995. 25 ON 30 NOV 1997. 100 OBS IN NOV 98.

Owner/Manager: CITY OF LONG BEACH

Danaus plexippus

monarch butterfly

Element Code: IILEPP2010

Status		NDDB Element Ranks		Other Lists	
Federal:	None	**Global:**	G5	**CDFG Status:**	
State:	None	**State:**	S3		

Habitat Associations

General: WINTER ROOST SITES EXTEND ALONG THE COAST FROM NORTHERN MENDOCINO TO BAJA CALIFORNIA, MEXICO.

Micro: ROOSTS LOCATED IN WIND-PROTECTED TREE GROVES (EUCALYPTUS, MONTEREY PINE, CYPRESS), WITH NECTAR AND WATER SOURCES NEARBY.

Occurrence No. 297 **Map Index:** 33186 **EO Index:** 2683

Occ Rank: Good
Origin: Natural/Native occurrence
Presence: Presumed Extant
Trend: Unknown

Dates Last Seen
Element: 1998-11-24
Site: 1998-11-24
Record Last Updated: 2002-05-07

Quad Summary: Redondo Beach (3311874/090C)
County Summary: Los Angeles

Lat/Long:	33.80324º / -118.38530º	**Township:**	04S		
UTM:	Zone-11 N3741202 E371771	**Range:**	14W		
Mapping Precision:	NON-SPECIFIC	**Section:**	XX	**Qtr:**	XX
Symbol Type:	POINT	**Meridian:**	S		
Radius:	2/5 mile	**Elevation:**	300 ft		

Location: VIA LA SELVA, JUST NORTH OF PALOS VERDES COUNTRY CLUB, TORRANCE.
Location Detail:
Ecological: HABITAT CONSISTS OF RESIDENTIAL VEGETATED WITH EUCALYPTUS IN THE BACK OF HOMES.
Threat:
General: MONARCHS OBSERVED FLYING BY A NUMBER OF SEARCHERS, BUT NO CLUSTERS WERE FOUND. 800 OBSERVED ON 24 NOV 1998.
Owner/Manager: PVT

Danaus plexippus

monarch butterfly

Element Code: IILEPP2010

Status		NDDB Element Ranks		Other Lists	
Federal:	None	**Global:**	G5	**CDFG Status:**	
State:	None	**State:**	S3		

Habitat Associations

General: WINTER ROOST SITES EXTEND ALONG THE COAST FROM NORTHERN MENDOCINO TO BAJA CALIFORNIA, MEXICO.

Micro: ROOSTS LOCATED IN WIND-PROTECTED TREE GROVES (EUCALYPTUS, MONTEREY PINE, CYPRESS), WITH NECTAR AND WATER SOURCES NEARBY.

Occurrence No. 298 **Map Index:** 33187 **EO Index:** 2682

Occ Rank: Unknown
Origin: Natural/Native occurrence
Presence: Presumed Extant
Trend: Unknown

Dates Last Seen
Element: 1989-11-XX
Site: 1989-11-XX
Record Last Updated: 1996-01-05

Quad Summary: Torrance (3311873/090D)
County Summary: Los Angeles

Lat/Long: 33.82964º / -118.37414º
UTM: Zone-11 N3744116 E372843
Mapping Precision: SPECIFIC
Symbol Type: POLYGON
Area: 10.5 acres

Township: 04S
Range: 14W
Section: XX **Qtr:** XX
Meridian: S
Elevation: 100 ft

Location: WILDERNESS PARK, NORTH OF SEPULVEDA BLVD, 0.5 MILE WEST OF PALOS VERDES BLVD. LOS ANGELES COUNTY.

Location Detail:

Ecological: ROOST TREES ARE EUCALYPTUS.

Threat:

General: MONARCHS (# UNKNOWN) OBSERVED ROOSTING AT THIS SITE IN NOVEMBER 1989.

Owner/Manager: LOS ANGELES COUNTY

Danaus plexippus

monarch butterfly

Element Code: IILEPP2010

Status		NDDB Element Ranks		Other Lists	
Federal:	None	**Global:**	G5	**CDFG Status:**	
State:	None	**State:**	S3		

Habitat Associations

General: WINTER ROOST SITES EXTEND ALONG THE COAST FROM NORTHERN MENDOCINO TO BAJA CALIFORNIA, MEXICO.

Micro: ROOSTS LOCATED IN WIND-PROTECTED TREE GROVES (EUCALYPTUS, MONTEREY PINE, CYPRESS), WITH NECTAR AND WATER SOURCES NEARBY.

Occurrence No. 299 **Map Index:** 33188 **EO Index:** 2681

Occ Rank: Fair
Origin: Natural/Native occurrence
Presence: Presumed Extant
Trend: Unknown

Dates Last Seen
Element: 1998-11-11
Site: 1999-11-23

Record Last Updated: 2002-05-06

Quad Summary: Los Alamitos (3311871/089D)

County Summary: Los Angeles

Lat/Long: 33.80699º / -118.08580º
UTM: Zone-11 N3741285 E399500
Mapping Precision: SPECIFIC
Symbol Type: POINT
Radius: 80 meters

Township: 04S
Range: 12W
Section: 24 **Qtr:** SE
Meridian: S
Elevation: 20 ft

Location: EL DORADO NATURE CENTER, BETWEEN SPRING STREET AND WILLOW STREET, WEST OF I-605, LONG BEACH.

Location Detail:

Ecological: ROOST TREES CONSIST OF A MIXED GROVE OF ALDER AND EUCALYPTUS TREES. ALTHOUGH WATER SUPPLY IS ADEQUATE, NECTAR SOURCE REMAINS UNKNOWN.

Threat:

General: 100'S OBSERVED ON 23 DEC 1990. 100 OBSERVED IN 1990-91. NONE FOUND IN 1992-93. 50 OBSERVED IN NOV 1995. 2500 OBSERVED ON 21 AND 30 NOV 1997. 500 OBS ON 11 NOV 98. 10 OBS ON 23 NOV 99.

Owner/Manager: CITY OF LONG BEACH

Danaus plexippus

monarch butterfly

Element Code: IILEPP2010

Status		NDDB Element Ranks		Other Lists	
Federal:	None	**Global:**	G5	**CDFG Status:**	
State:	None	**State:**	S3		

Habitat Associations

General: WINTER ROOST SITES EXTEND ALONG THE COAST FROM NORTHERN MENDOCINO TO BAJA CALIFORNIA, MEXICO.

Micro: ROOSTS LOCATED IN WIND-PROTECTED TREE GROVES (EUCALYPTUS, MONTEREY PINE, CYPRESS), WITH NECTAR AND WATER SOURCES NEARBY.

Occurrence No. 303 **Map Index:** 33192 **EO Index:** 2680

Occ Rank: Good
Origin: Natural/Native occurrence
Presence: Presumed Extant
Trend: Unknown

Dates Last Seen
Element: 1997-11-30
Site: 1997-11-30
Record Last Updated: 1998-06-22

Quad Summary: Seal Beach (3311861/072A), Los Alamitos (3311871/089D)
County Summary: Orange

Lat/Long:	33.74977º / -118.09323º	**Township:**	05S	
UTM:	Zone-11 N3734948 E398745	**Range:**	12W	
Mapping Precision:	NON-SPECIFIC	**Section:**	12	**Qtr:** W
Symbol Type:	POINT	**Meridian:**	S	
Radius:	1/5 mile	**Elevation:**	15 ft	

Location: GUM GROVE PARK, NORTH OF CRESTVIEW AVENUE, SEAL BEACH.
Location Detail:
Ecological: ROOSTING HABITAT CONSISTS OF A SMALL GROVE OF EUCALYPTUS PLANTED ON A SLOPE BEHIND SOME HOMES.
Threat: POSSIBLE THREAT FROM TREE TRIMMING, VANDALISM (FIRE), AND DEVELOPMENT OF ADJACENT OIL COMPANY LANDS.
General: 50-100 OBSERVED ROOSTING/FLYING ON 21 MARCH 1990. 700 OBSERVED DURING 1990-91. <10 OBSERVED IN NOV 1992; NONE BY JAN 1993. ONE FLYER OBSERVED IN DEC 1993. 25 OBSERVED IN NOV 1995. 2000 OBSERVED ON 30 NOV 97.
Owner/Manager: UNKNOWN

Danaus plexippus

monarch butterfly

Element Code: IILEPP2010

Status	NDDB Element Ranks	Other Lists
Federal: None	**Global:** G5	**CDFG Status:**
State: None	**State:** S3	

Habitat Associations

General: WINTER ROOST SITES EXTEND ALONG THE COAST FROM NORTHERN MENDOCINO TO BAJA CALIFORNIA, MEXICO.

Micro: ROOSTS LOCATED IN WIND-PROTECTED TREE GROVES (EUCALYPTUS, MONTEREY PINE, CYPRESS), WITH NECTAR AND WATER SOURCES NEARBY.

Occurrence No. 304 **Map Index:** 33193 **EO Index:** 2785

Occ Rank: Good
Origin: Natural/Native occurrence
Presence: Presumed Extant
Trend: Unknown

Dates Last Seen
Element: 1997-11-30
Site: 1997-11-30
Record Last Updated: 1998-06-22

Quad Summary: Newport Beach (3311768/071B), Seal Beach (3311861/072A)

County Summary: Orange

Lat/Long: 33.70535º / -118.00039º
UTM: Zone-11 N3729935 E407296
Mapping Precision: NON-SPECIFIC
Symbol Type: POINT
Radius: 1/5 mile

Township: 05S
Range: 11W
Section: 26 **Qtr:** SW
Meridian: S
Elevation: 25 ft

Location: EAST SIDE OF HUNTINGTON BEACH CENTRAL PARK, JUST WEST OF GOTHARD STREET AND SOUTH OF SLATER AVENUE, HUNTINGTON BEACH

Location Detail: MONARCHS ARE KNOWN TO AGGREGATE IN TWO AREAS: IN THE VICINITY OF THE AMPHITHEATER AND IN THE VICINITY OF THE GOTHARD STREET PARKING LOT.

Ecological: HABITAT CONSISTS OF A EUCALYPTUS GROVE (AMPHITHEATER AREA) AND OTHER EXTENSIVE EXOTIC TREES AND SHRUBBERY (PARKING LOT AREA).

Threat: POSSIBLE THREAT FORM TREE TRIMMING AND PESTICIDES.

General: 3-5K OBSERVED ON 23 DEC 89; 5000 OBSERVED DURING 1990-91; NONE OBSERVED DURING A VISIT IN 1992-93; <10 OBSERVED OBSERVED IN 1993-94. 50 OBSERVED ON 25 NOV 94; NONE BY 1 JAN 1996. 6800 OBSERVED ON 30 NOV 97.

Owner/Manager: CITY OF HUNTINGTON BEACH

Danaus plexippus

monarch butterfly

Element Code: IILEPP2010

Status	NDDB Element Ranks	Other Lists
Federal: None	**Global:** G5	**CDFG Status:**
State: None	**State:** S3	

Habitat Associations

General: WINTER ROOST SITES EXTEND ALONG THE COAST FROM NORTHERN MENDOCINO TO BAJA CALIFORNIA, MEXICO.

Micro: ROOSTS LOCATED IN WIND-PROTECTED TREE GROVES (EUCALYPTUS, MONTEREY PINE, CYPRESS), WITH NECTAR AND WATER SOURCES NEARBY.

Occurrence No. 314 **Map Index:** 33362 **EO Index:** 15015

Occ Rank: Good
Origin: Natural/Native occurrence
Presence: Presumed Extant
Trend: Unknown

Dates Last Seen
Element: 1997-11-30
Site: 1997-11-30
Record Last Updated: 1998-06-16

Quad Summary: Seal Beach (3311861/072A)
County Summary: Orange

Lat/Long: 33.72047º / -118.03369º
UTM: Zone-11 N3731642 E404227
Mapping Precision: SPECIFIC
Symbol Type: POINT
Radius: 80 meters

Township: 05S
Range: 11W
Section: 21 **Qtr:** SW
Meridian: S
Elevation: 20 ft

Location: NORMA B. GIBBS REGIONAL PARK, JUST WEST OF MEADOWLARK GOLF COURSE, HUNTINGTON BEACH.

Location Detail: SITE WAS PREVIOUSLY KNOWN AS HUNTINGTON BEACH NATURE PARK. SITE IS LOCATED ON THE WEST SIDE OF GRAHAM STREET, BETWEEN WARNER AND HEIL AVENUES, HUNTINGTON BEACH.

Ecological: SMALL, REHABILITATED SITE; GROVE CONSISTED ON DEAD/DYING EUCALYPTUS, WHICH WAS ENHANCED TO SUPPORT WINTERING MONARCHS.

Threat:

General: SITE HAS HAD 1000-1500 MONARCHS IN GOOD YEARS, HISTORICALLY. 350 OBSERVED ON 30 NOV 97.

Owner/Manager: CITY OF HUNTINGTON BEACH

Dithyrea maritima

beach spectaclepod

Element Code: PDBRA10020

Status	NDDB Element Ranks	Other Lists
Federal: None	**Global:** G2	**CNPS List:** 1B.1
State: Threatened	**State:** S2.1	

Habitat Associations

General: COASTAL DUNES, COASTAL SCRUB. FORMERLY MORE WIDESPREAD IN COASTAL HABITATS IN SO. CALIF.

Micro: SEA SHORES, ON SAND DUNES, AND SANDY PLACES NEAR THE SHORE. 3-50M.

Occurrence No. 2 **Map Index:** 01655 **EO Index:** 20545

Occ Rank: None
Origin: Natural/Native occurrence
Presence: Extirpated
Trend: Unknown

Dates Last Seen
Element: 1902-05-25
Site: 1998-07-01
Record Last Updated: 2002-05-06

Quad Summary: Redondo Beach (3311874/090C), Venice (3311884/090B)
County Summary: Los Angeles

Lat/Long: 33.86695º / -118.40396º
UTM: Zone-11 N3748290 E370140
Mapping Precision: NON-SPECIFIC
Symbol Type: POINT
Radius: 1 mile

Township: 03S
Range: 15W
Section: XX **Qtr:** XX
Meridian: S
Elevation: 20 ft

Location: HERMOSA BEACH, 2.0 MILES NORTH OF REDONDO.
Location Detail:
Ecological: IN SAND DUNES.
Threat:
General: EXTIRPATED AT THIS SITE ACCORDING TO P. AIGNER, SURVEYED FROM PLAYA DEL REY TO PALOS VERDES PENINSULA. ONLY POTENTIAL HABITAT REMAINING IS EL SEGUNDO BLUE BUTTERFLY PRESERVE AT LAX, NO ACCESS, NO PLANTS OBS THRU FENCE (1998).
Owner/Manager: PVT

Dudleya virens ssp. insularis

island green dudleya

Element Code: PDCRA040S2

Status	NDDB Element Ranks	Other Lists
Federal: None	**Global:** G2T2	**CNPS List:** 1B.2
State: None	**State:** S2.2	

Habitat Associations

General: COASTAL BLUFF SCRUB, COASTAL SCRUB.

Micro: ROCKY SOILS. 5-300M.

Occurrence No. 4 **Map Index:** 17574 **EO Index:** 47067

Occ Rank: Good
Origin: Natural/Native occurrence
Presence: Presumed Extant
Trend: Unknown

Dates Last Seen
Element: 1990-XX-XX
Site: 1990-XX-XX

Record Last Updated: 2002-01-23

Quad Summary: Redondo Beach (3311874/090C)

County Summary: Los Angeles

Lat/Long: 33.74057º / -118.40236º
UTM: Zone-11 N3734274 E370097
Mapping Precision: SPECIFIC
Symbol Type: POLYGON
Area: 14.7 acres

Township: 05S
Range: 15W
Section: XX **Qtr:** XX
Meridian: S
Elevation: 80 ft

Location: PALOS VERDES PENINSULA, FROM NEAR POINT VICENTE LIGHTHOUSE SOUTHWARD TO NEAR POINT VICENTE COUNTY PARK.

Location Detail:

Ecological: ROCKY OUTCROPS ON BLUFFS FACING THE OCEAN. ALSO ALONG A ROADCUT GROWING WITH ERIOGONUM CINEREUM, ENCELIA CALIFORNICA, HAPLOPAPPUS VENETUS, ANNUAL GRASSES, STEPHANOMERIA VIRGATA, PENNISETUM SETACEUM, AND FOENICULUM VULGARIS.

Threat: DEVELOPMENT; PLANS INCLUDE EITHER 120 HOMES OR A HOTEL IN ADDITION TO A GOLF COURSE. CURRENT PROJECT STATUS IS UNKNOWN.

General: PALOS VERDE PENINSULA HARBORS ONLY KNOWN MAINLAND POPULATIONS OF THIS PLANT.

Owner/Manager: UNKNOWN

Empidonax traillii extimus

southwestern willow flycatcher

Element Code: ABPAE33043

Status	NDDB Element Ranks	Other Lists
Federal: Endangered	**Global:** G5T1T2	**CDFG Status:**
State: Endangered	**State:** S1	

Habitat Associations

General: RIPARIAN WOODLANDS IN SOUTHERN CALIFORNIA.

Micro:

Occurrence No. 42 **Map Index:** 01965 **EO Index:** 59152

Occ Rank: Unknown
Origin: Natural/Native occurrence
Presence: Presumed Extant
Trend: Unknown

Dates Last Seen
Element: 1895-06-29
Site: 1895-06-29

Record Last Updated: 2005-01-04

Quad Summary: South Gate (3311882/089B)

County Summary: Los Angeles

Lat/Long: 33.90327º / -118.22273º
UTM: Zone-11 N3752103 E386952
Mapping Precision: NON-SPECIFIC
Symbol Type: POINT
Radius: 1 mile

Township: 03S
Range: 13W
Section: XX **Qtr:** XX
Meridian: S
Elevation: 70 ft

Location: COMPTON.

Location Detail: NO OTHER LOCATION INFORMATION GIVEN, MAPPED IN THE GENERAL VICINITY OF COMPTON & THE LAT-LONG COORDINATES GIVEN BY MVZ. LOCATION UNCERTAINTY GIVEN AS 1.5 MILES.

Ecological:

Threat:

General: MVZ #649, NEST PLUS EGGS, COLLECTED 29 JUN 1895 BY W. B. JUDSON

Owner/Manager: UNKNOWN

Empidonax traillii extimus

southwestern willow flycatcher

Element Code: ABPAE33043

Status	NDDB Element Ranks	Other Lists
Federal: Endangered	**Global:** G5T1T2	**CDFG Status:**
State: Endangered	**State:** S1	

Habitat Associations

General: RIPARIAN WOODLANDS IN SOUTHERN CALIFORNIA.

Micro:

Occurrence No. 43 **Map Index:** 51258 **EO Index:** 59153

Occ Rank: Unknown
Origin: Natural/Native occurrence
Presence: Presumed Extant
Trend: Unknown

Dates Last Seen
Element: 1894-05-20
Site: 1894-05-20
Record Last Updated: 2005-01-05

Quad Summary: Inglewood (3311883/090A), South Gate (3311882/089B), Los Angeles (3411812/110C), Hollywood (3411813/111D), Pasadena (3411822/110B), Burbank (3411823/111A)

County Summary: Los Angeles

Lat/Long: 34.05366º / -118.24549º
UTM: Zone-11 N3768805 E385050
Mapping Precision: NON-SPECIFIC
Symbol Type: POINT
Radius: 5 mile

Township: 01S
Range: 13W
Section: 28 **Qtr:** XX
Meridian: S
Elevation: 280 ft

Location: LOS ANGELES

Location Detail: NO OTHER LOCATION INFORMATION GIVEN, MAPPED IN THE GENERAL VICINITY OF LOS ANGELES

Ecological:

Threat:

General: MVZ #2205 (EGG SET), COLLECTED 20 MAY 1894 BY R. H. ROBERTSON. MVZ #136340 (STUDY SKIN) COLLECTED JUNE 1852 BY G. A. MCCALL.

Owner/Manager: UNKNOWN

Eumops perotis californicus

western mastiff bat

Element Code: AMACD02011

Status	NDDB Element Ranks	Other Lists
Federal: None	**Global:** G5T4	**CDFG Status:** SC
State: None	**State:** S3?	

Habitat Associations

General: MANY OPEN, SEMI-ARID TO ARID HABITATS, INCLUDING CONIFER & DECIDUOUS WOODLANDS, COASTAL SCRUB, GRASSLANDS, CHAPARRAL ETC

Micro: ROOSTS IN CREVICES IN CLIFF FACES, HIGH BUILDINGS, TREES & TUNNELS.

Occurrence No. 65 **Map Index:** 66308 **EO Index:** 66394

Occ Rank: Unknown
Origin: Natural/Native occurrence
Presence: Presumed Extant
Trend: Unknown

Dates Last Seen
Element: 1987-04-01
Site: 1987-04-01
Record Last Updated: 2006-09-21

Quad Summary: Inglewood (3311883/090A)
County Summary: Los Angeles

Lat/Long: 33.93103º / -118.30905º
UTM: Zone-11 N3755281 E379010
Mapping Precision: NON-SPECIFIC
Symbol Type: POINT
Radius: 1 mile

Township: 03S
Range: 14W
Section: 01 **Qtr:** XX
Meridian: S
Elevation: 200 ft

Location: SW LOS ANGELES.

Location Detail: EXACT LOCATION UNKNOWN. MAPPED ACCORDING TO LAT/LONG COORDINATES GIVEN IN MANIS, WITH UNCERTAINTY OF 3218.688M.

Ecological:

Threat:

General: 1 MALE AND 1 FEMALE SPECIMEN COLLECTED BY WILLIAM E. RAINEY ON 1 JAN AND 1 APR 1987, MVZ #182350 AND #182475, RESPECTIVELY.

Owner/Manager: UNKNOWN

Eumops perotis californicus

western mastiff bat

Element Code: AMACD02011

Status

Federal: None
State: None

NDDB Element Ranks

Global: G5T4
State: S3?

Other Lists

CDFG Status: SC

Habitat Associations

General: MANY OPEN, SEMI-ARID TO ARID HABITATS, INCLUDING CONIFER & DECIDUOUS WOODLANDS, COASTAL SCRUB, GRASSLANDS, CHAPARRAL ETC

Micro: ROOSTS IN CREVICES IN CLIFF FACES, HIGH BUILDINGS, TREES & TUNNELS.

Occurrence No. 74 **Map Index:** 66318 **EO Index:** 66404

Occ Rank: Unknown
Origin: Natural/Native occurrence
Presence: Presumed Extant
Trend: Unknown

Dates Last Seen

Element: 1990-03-21
Site: 1990-03-21

Record Last Updated: 2006-09-21

Quad Summary: Anaheim (3311778/088C), Whittier (3311881/089A), La Habra (3311788/088B), Los Alamitos (3311871/089D)

County Summary: Los Angeles, Orange

Lat/Long: 33.86705º / -117.99820º
UTM: Zone-11 N3747863 E407672
Mapping Precision: NON-SPECIFIC
Symbol Type: POINT
Radius: 1 mile

Township: 03S
Range: 11W
Section: 35 **Qtr:** XX
Meridian: S
Elevation:

Location: BUENA PARK.

Location Detail: EXACT LOCATION UNKNOWN. MAPPED IN THE VICINITY OF BUENA PARK.

Ecological:

Threat:

General: 1 FEMALE SPECIMEN COLLECTED BY D.G. CONSTANTINE ON 21 MAR 1990, LACM #94013.

Owner/Manager: UNKNOWN

Eumops perotis californicus

western mastiff bat

Element Code: AMACD02011

Status	NDDB Element Ranks	Other Lists
Federal: None	**Global:** G5T4	**CDFG Status:** SC
State: None	**State:** S3?	

Habitat Associations

General: MANY OPEN, SEMI-ARID TO ARID HABITATS, INCLUDING CONIFER & DECIDUOUS WOODLANDS, COASTAL SCRUB, GRASSLANDS, CHAPARRAL ETC

Micro: ROOSTS IN CREVICES IN CLIFF FACES, HIGH BUILDINGS, TREES & TUNNELS.

Occurrence No. 168 **Map Index:** 23783 **EO Index:** 66526

Occ Rank: Unknown
Origin: Natural/Native occurrence
Presence: Presumed Extant
Trend: Unknown

Dates Last Seen
Element: 1929-07-22
Site: 1929-07-22

Record Last Updated: 2006-11-01

Quad Summary: Inglewood (3311883/090A)

County Summary: Los Angeles

Lat/Long: 33.88942º / -118.31857º
UTM: Zone-11 N3750677 E378070
Mapping Precision: NON-SPECIFIC
Symbol Type: POINT
Radius: 1 mile

Township: 03S
Range: 14W
Section: XX **Qtr:** XX
Meridian: S
Elevation: 50 ft

Location: GARDENA.

Location Detail: EXACT LOCATION UNKNOWN. MAPPED ACCORDING TO LAT/LONG COORDINATES PROVIDED BY PIERSON AND RAINEY.

Ecological:

Threat:

General: SPECIMEN COLLECTED 22 JUL 1929 AND DEPOSITED AT SBMNH.

Owner/Manager: UNKNOWN

Eumops perotis californicus

western mastiff bat

Element Code: AMACD02011

Status

Federal: None
State: None

NDDB Element Ranks

Global: G5T4
State: S3?

Other Lists

CDFG Status: SC

Habitat Associations

General: MANY OPEN, SEMI-ARID TO ARID HABITATS, INCLUDING CONIFER & DECIDUOUS WOODLANDS, COASTAL SCRUB, GRASSLANDS, CHAPARRAL ETC

Micro: ROOSTS IN CREVICES IN CLIFF FACES, HIGH BUILDINGS, TREES & TUNNELS.

Occurrence No. 197 **Map Index:** 68662 **EO Index:** 69071

Occ Rank: Unknown
Origin: Natural/Native occurrence
Presence: Presumed Extant
Trend: Unknown

Dates Last Seen

Element: XXXX-XX-XX
Site: XXXX-XX-XX

Record Last Updated: 2007-03-22

Quad Summary: Newport Beach (3311768/071B), Seal Beach (3311861/072A)

County Summary: Orange

Lat/Long: 33.70120º / -118.00708º
UTM: Zone-11 N3729482 E406671
Mapping Precision: NON-SPECIFIC
Symbol Type: POINT
Radius: 3/5 mile

Township: 05S
Range: 11W
Section: 35 **Qtr:** XX
Meridian: S
Elevation: 50 ft

Location: HUNTINGTON CENTRAL PARK.
Location Detail:
Ecological:
Threat:
General: INDIVIDUAL(S) DETECTED ACOUSTICALLY.
Owner/Manager: CITY OF HUNTINGTON BEACH

Euphilotes battoides allyni

El Segundo blue butterfly

Element Code: IILEPG201B

Status		NDDB Element Ranks		Other Lists	
Federal:	Endangered	**Global:**	G5T1	**CDFG Status:**	
State:	None	**State:**	S1		

Habitat Associations

General: RESTRICTED TO REMNANT COASTAL DUNE HABITAT IN SOUTHERN CALIFORNIA.

Micro: HOSTPLANT IS ERIOGONUM PARVIFOLIUM; LARVAE FEED ONLY ON THE FLOWERS AND SEEDS; USED BY ADULTS AS MAJOR NECTAR SOURCE.

Occurrence No. 3 **Map Index:** 69867 **EO Index:** 70689

Occ Rank: Unknown
Origin: Natural/Native occurrence
Presence: Presumed Extant
Trend: Unknown

Dates Last Seen
Element: 1990-XX-XX
Site: 1990-XX-XX
Record Last Updated: 2007-09-11

Quad Summary: Redondo Beach (3311874/090C)
County Summary: Los Angeles

Lat/Long:	33.80342º / -118.39419º	**Township:**	04S		
UTM:	Zone-11 N3741233 E370948	**Range:**	14W		
Mapping Precision:	NON-SPECIFIC	**Section:**	30	**Qtr:**	NW
Symbol Type:	POINT	**Meridian:**	S		
Radius:	1/5 mile	**Elevation:**	20 ft		

Location: MALAGA COVE, JUST NORTH OF THE PALOS VERDES PENINSULA.

Location Detail: AREA IS APPROXIMATELY 1 ACRE (1983). PRIVATE LAND ALONG THE BASE OF THE BLUFFS SUPPORT ERIOGONUM PARVIFOLIUM AND THE EL SEGUNDA BLUE BUTTERFLY.

Ecological: THE SITE WITH THE MOST ERIOGONUM PARVIFOLIUM WAS DAMAGED BY EROSION CONTROL DURING THE WINTER OF 1994/95.

Threat: SITE HEAVILY OVERGROWN WITH ICEPLANT AND ERODED.

General: DISCOVERED AT THIS SITE IN 1983 BY J. MORTON AND T. LEIGH. 1984: ONE DAY POPULATION COUNT OF 60; LESS THAN 50 PLANTS WITH 30,000 FLOWERHEADS. 1990 SURVEY INDICATED THE STATUS HAD REMAINED UNCHANGED SINCE 1984.

Owner/Manager: UNKNOWN, PVT

Euphilotes battoides allyni

El Segundo blue butterfly

Element Code: IILEPG201B

Status		NDDB Element Ranks		Other Lists	
Federal:	Endangered	**Global:**	G5T1	**CDFG Status:**	
State:	None	**State:**	S1		

Habitat Associations

General: RESTRICTED TO REMNANT COASTAL DUNE HABITAT IN SOUTHERN CALIFORNIA.

Micro: HOSTPLANT IS ERIOGONUM PARVIFOLIUM; LARVAE FEED ONLY ON THE FLOWERS AND SEEDS; USED BY ADULTS AS MAJOR NECTAR SOURCE.

Occurrence No. 4 **Map Index:** 70052 **EO Index:** 70908

Occ Rank: Unknown
Origin: Natural/Native occurrence
Presence: Presumed Extant
Trend: Unknown

Dates Last Seen
Element: 2007-XX-XX
Site: 2007-XX-XX

Record Last Updated: 2007-09-27

Quad Summary: Redondo Beach (3311874/090C)
County Summary: Los Angeles

Lat/Long: 33.81491º / -118.39049º
UTM: Zone-11 N3742503 E371308
Mapping Precision: NON-SPECIFIC
Symbol Type: POINT
Radius: 1/10 mile

Township: 04S
Range: 14W
Section: 19 **Qtr:** W
Meridian: S
Elevation: 50 ft

Location: MIRAMAR PARK, REDONDO BEACH.
Location Detail:
Ecological:
Threat:
General: BUTTERFLIES OBSERVED AT MIRAMAR PARK DURING 2007.
Owner/Manager: CITY OF TORRANCE

Gila bicolor mohavensis

Mohave tui chub

Element Code: AFCJB1303H

Status	NDDB Element Ranks	Other Lists
Federal: Endangered	**Global:** G4T1	**CDFG Status:**
State: Endangered	**State:** S1	

Habitat Associations

General: ENDEMIC TO THE MOJAVE RIVER BASIN, ADAPTED TO ALKALINE, MINERALIZED WATERS.

Micro: NEEDS DEEP POOLS, PONDS, OR SLOUGH-LIKE AREAS. NEEDS VEGETATION FOR SPAWNING.

Occurrence No. 5 **Map Index:** 01666 **EO Index:** 28635

Occ Rank: None
Origin: Transplant Outside of Native Hab./Range
Presence: Extirpated
Trend: Unknown

Dates Last Seen
Element: 1976-XX-XX
Site: 1976-XX-XX

Record Last Updated: 1998-10-19

Quad Summary: Torrance (3311873/090D)

County Summary: Los Angeles

Lat/Long: 33.78311º / -118.34565º
UTM: Zone-11 N3738921 E375412
Mapping Precision: NON-SPECIFIC
Symbol Type: POINT
Radius: 1/5 mile

Township: 04S
Range: 14W
Section: 33 **Qtr:** XX
Meridian: S
Elevation: 720 ft

Location: SOUTH COAST BOTANIC GARDEN REFUGIUM, PALOS VERDES.

Location Detail: BOTANIC GARDEN IS LOCATED AT 26300 CRENSHAW BLVD, PALOS VERDES PENINSULA, CA 90274

Ecological: THE BOTANIC GARDEN SITE WAS AN OPEN PIT MINE FOR DIATOMACEOUS EARTH FROM 1929 - 1956. IT WAS A LANDFILL FROM 1957 TO 1965. THE GARDENS INCLUDE A 2 ACRE MAN-MADE LAKE AND STREAM.

Threat:

General: EXPERIMENTAL TRANSPLANT OUTSIDE NATIVE RANGE. 147 PLANTED IN JAN 1970, SPAWNING HAD OCCURRED BY JULY 3, 1970. TEMPORARILY SUCCESSFUL BUT POPULATION EXTINCT BY 1976.

Owner/Manager: LOS ANGELES COUNTY

Glaucopsyche lygdamus palosverdesensis

Palos Verdes blue butterfly

Element Code: IILEPG402A

Status	NDDB Element Ranks	Other Lists
Federal: Endangered	**Global:** G5T1	**CDFG Status:**
State: None	**State:** S1	

Habitat Associations

General: RESTRICTED TO THE COOL, FOG-SHROUDED, SEAWARD SIDE OF PALOS VERDES HILLS, LOS ANGELES COUNTY.

Micro: HOST PLANT IS ASTRAGALUS TRICHOPODUS VAR. LONCHUS (LOCOWEED).

Occurrence No. 1 **Map Index:** 01687 **EO Index:** 23027

Occ Rank: None
Origin: Natural/Native occurrence
Presence: Extirpated
Trend: Unknown

Dates Last Seen
Element: 1976-XX-XX
Site: 1988-XX-XX

Record Last Updated: 2004-12-22

Quad Summary: Redondo Beach (3311874/090C)

County Summary: Los Angeles

Lat/Long: 33.75329º / -118.39749º
UTM: Zone-11 N3735678 E370567
Mapping Precision: NON-SPECIFIC
Symbol Type: POINT
Radius: 1/5 mile

Township: 05S
Range: 15W
Section: XX **Qtr:** XX
Meridian: S
Elevation: 780 ft

Location: ALTA VISTA WAY WEST OF HAWTHORNE BLVD; RANCHO PALOS VERDES.

Location Detail:

Ecological: FORMERLY A LARGE, UNDISTURBED COASTAL TERRACE.

Threat:

General: EXTIRPATED BY HOUSING DEVELOPMENT & ROAD CONSTRUCTION IN 1978; NO ADULTS OR LARVAL FOODPLANTS FOUND IN 1979. IN 1976, ASTRAGALUS FROM THIS LOCATION WERE SALVAGED & REPLANTED IN PORTUGUESE CYN. REINTRODUCTION WOULD REQUIRE CONTINUAL MGMT.

Owner/Manager: PVT

Glaucopsyche lygdamus palosverdesensis

Palos Verdes blue butterfly

Element Code: IILEPG402A

Status	NDDB Element Ranks	Other Lists
Federal: Endangered	**Global:** G5T1	**CDFG Status:**
State: None	**State:** S1	

Habitat Associations

General: RESTRICTED TO THE COOL, FOG-SHROUDED, SEAWARD SIDE OF PALOS VERDES HILLS, LOS ANGELES COUNTY.

Micro: HOST PLANT IS ASTRAGALUS TRICHOPODUS VAR. LONCHUS (LOCOWEED).

Occurrence No. 2 **Map Index:** 01696 **EO Index:** 23026

Occ Rank: None
Origin: Natural/Native occurrence
Presence: Extirpated
Trend: Unknown

Dates Last Seen
Element: 1982-XX-XX
Site: 1988-XX-XX
Record Last Updated: 2004-12-22

Quad Summary: Redondo Beach (3311874/090C)
County Summary: Los Angeles

Lat/Long: 33.76637º / -118.39238º
UTM: Zone-11 N3737122 E371060
Mapping Precision: SPECIFIC
Symbol Type: POINT
Radius: 80 meters

Township: 05S
Range: 14W
Section: 07 **Qtr:** XX
Meridian: S
Elevation: 940 ft

Location: FRED HESSE PARK, WEST OF HAWTHORNE BLVD AT LOCHLEMA LANE, RANCHO PALOS VERDES.

Location Detail: ABOUT 15 ACRES AT THE WEST END OF SITE REMAINS UNDEVELOPED AND SOME IS DESIGNATED A NATIVE PLANT/NATURE STUDY AREA BY THE CITY; REMAINDER IS DISKED ANNUALLY.

Ecological: NO ASTRAGALUS SEEN HERE 1983 THROUGH 1988.

Threat:

General: DESIGNATED CRITICAL HABITAT IS 1980. RESTORATION OF NATURAL AREA POSSIBLE. THE BUTTERFLY AND ASSOCIATED LARVAL FOODPLANT EXTIRPATED BY PARK DEVELOPMENT IN 1982. MATTOON COUNTED 6 ADULTS ON 20 FOOD PLANTS ON BEST DAY IN SPRING 1982.

Owner/Manager: CITY OF RANCHO PALOS VERDES

Glaucopsyche lygdamus palosverdesensis

Palos Verdes blue butterfly

Element Code: IILEPG402A

Status	NDDB Element Ranks	Other Lists
Federal: Endangered	**Global:** G5T1	**CDFG Status:**
State: None	**State:** S1	

Habitat Associations

General: RESTRICTED TO THE COOL, FOG-SHROUDED, SEAWARD SIDE OF PALOS VERDES HILLS, LOS ANGELES COUNTY.

Micro: HOST PLANT IS ASTRAGALUS TRICHOPODUS VAR. LONCHUS (LOCOWEED).

Occurrence No. 3 **Map Index:** 01665 **EO Index:** 23025

Occ Rank: None
Origin: Natural/Native occurrence
Presence: Extirpated
Trend: Unknown

Dates Last Seen
Element: 1979-XX-XX
Site: 1988-XX-XX

Record Last Updated: 2000-01-03

Quad Summary: Redondo Beach (3311874/090C)

County Summary: Los Angeles

Lat/Long: 33.76586º / -118.40341º
UTM: Zone-11 N3737080 E370038
Mapping Precision: SPECIFIC
Symbol Type: POINT
Radius: 80 meters

Township: 05S
Range: 15W
Section: 12 **Qtr:** XX
Meridian: S
Elevation: 400 ft

Location: AGUA AMARGA CANYON, 0.4 KM UP CANYON; RANCHO PALOS VERDES/PALOS VERDES ESTATES.

Location Detail:

Ecological: WEED MANAGEMENT NECESSARY FOR SUCCESSFUL REINTRODUCTION OF FOODPLANT. NO ASTRAGALUS SEEN HERE 1981 THROUGH 1988.

Threat: GOPHERS AND WEEDS EXTIRPATED ASTRAGALUS.

General: DESIGNATED CRITICAL HABITAT IN 1980. ONLY KNOWN COLONY OF PVBB AND ASTRAGALUS TO GO EXTINCT FROM DIRECT HUMAN ALTERATION OF HABITAT. AREA CONTINUED TO BE OPEN SPACE WITH NO DEVELOPMENT; CANYON TOO STEEP FOR DISKING.

Owner/Manager: PVT-RANCHO PALOS VERDES

Glaucopsyche lygdamus palosverdesensis

Palos Verdes blue butterfly

Element Code: IILEPG402A

Status	NDDB Element Ranks	Other Lists
Federal: Endangered	**Global:** G5T1	**CDFG Status:**
State: None	**State:** S1	

Habitat Associations

General: RESTRICTED TO THE COOL, FOG-SHROUDED, SEAWARD SIDE OF PALOS VERDES HILLS, LOS ANGELES COUNTY.

Micro: HOST PLANT IS ASTRAGALUS TRICHOPODUS VAR. LONCHUS (LOCOWEED).

Occurrence No. 5 **Map Index:** 01725 **EO Index:** 23023

Occ Rank: None
Origin: Natural/Native occurrence
Presence: Possibly Extirpated
Trend: Unknown

Dates Last Seen
Element: 1986-05-XX
Site: 1986-05-XX
Record Last Updated: 2000-01-03

Quad Summary: Redondo Beach (3311874/090C)
County Summary: Los Angeles

Lat/Long: 33.74695º / -118.38314º
UTM: Zone-11 N3734957 E371887
Mapping Precision: NON-SPECIFIC
Symbol Type: POINT
Radius: 1/5 mile

Township: 05S
Range: 14W
Section: XX **Qtr:** XX
Meridian: S
Elevation: 400 ft

Location: ALONG TRAILS WEST OF PORTUGUESE BEND RIDING CLUB; RANCHO PALOS VERDES.

Location Detail:

Ecological: THE HOST PLANT, ASTRAGALUS, GROWS HERE, BUT PALOS VERDES BLUE HAS NOT BEEN OBSERVED SINCE THE SITE DISCOVERY IN 1982.

Threat:

General: AREA RECEIVES RECREATIONAL USE AND WILL EVENTUALLY BE DEVELOPED, BUT IS CURRENTLY NOT HEAVILY IMPACTED. GOOD AREA FOR POSSIBLE REINTRODUCTION EFFORTS.

Owner/Manager: PVT-FILIORUM CORP

Glaucopsyche lygdamus palosverdesensis

Palos Verdes blue butterfly

Element Code: IILEPG402A

Status	NDDB Element Ranks	Other Lists
Federal: Endangered	**Global:** G5T1	**CDFG Status:**
State: None	**State:** S1	

Habitat Associations

General: RESTRICTED TO THE COOL, FOG-SHROUDED, SEAWARD SIDE OF PALOS VERDES HILLS, LOS ANGELES COUNTY.

Micro: HOST PLANT IS ASTRAGALUS TRICHOPODUS VAR. LONCHUS (LOCOWEED).

Occurrence No. 6 **Map Index:** 01753 **EO Index:** 23022

Occ Rank: None
Origin: Natural/Native occurrence
Presence: Possibly Extirpated
Trend: Unknown

Dates Last Seen
Element: 1982-XX-XX
Site: 1988-XX-XX

Record Last Updated: 2000-01-05

Quad Summary: Torrance (3311873/090D), Redondo Beach (3311874/090C)

County Summary: Los Angeles

Lat/Long: 33.75918º / -118.37369º
UTM: Zone-11 N3736302 E372781
Mapping Precision: NON-SPECIFIC
Symbol Type: POINT
Radius: 1/5 mile

Township: 05S
Range: 14W
Section: XX **Qtr:** XX
Meridian: S
Elevation: 1,200 ft

Location: NEAR INTERSECTION OF SEACREST DRIVE, CRENSHAW BLVD AND CREST RD; RANCHO PALOS VERDES.

Location Detail:

Ecological:

Threat:

General: SITE DISCOVERED IN 1981; GRADING DESTROYED MOST OF HABITAT IN 1982-83. IN 1983, 6 ASTRAGALUS PLANTS SURVIVED IN TWO PATCHES, BUT LATER GRADING REDUCED # OF PLANTS TO ONLY TWO. NO PALOS VERDES BLUE BUTTERFLIES OBSERVED SINCE 1982.

Owner/Manager: PVT

Glaucopsyche lygdamus palosverdesensis

Palos Verdes blue butterfly

Element Code: IILEPG402A

Status

Federal: Endangered
State: None

NDDB Element Ranks

Global: G5T1
State: S1

Other Lists

CDFG Status:

Habitat Associations

General: RESTRICTED TO THE COOL, FOG-SHROUDED, SEAWARD SIDE OF PALOS VERDES HILLS, LOS ANGELES COUNTY.

Micro: HOST PLANT IS ASTRAGALUS TRICHOPODUS VAR. LONCHUS (LOCOWEED).

Occurrence No. 7 **Map Index:** 01760 **EO Index:** 23021

Occ Rank: None
Origin: Natural/Native occurrence
Presence: Extirpated
Trend: Unknown

Dates Last Seen

Element: XXXX-XX-XX
Site: 1988-XX-XX

Record Last Updated: 2000-01-05

Quad Summary: San Pedro (3311863/073A), Torrance (3311873/090D)

County Summary: Los Angeles

Lat/Long: 33.75084º / -118.37257º
UTM: Zone-11 N3735376 E372872
Mapping Precision: NON-SPECIFIC
Symbol Type: POINT
Radius: 1/5 mile

Township: 05S
Range: 14W
Section: XX **Qtr:** XX
Meridian: S
Elevation: 800 ft

Location: ALTAMIRA CANYON, NEAR NARCISSA DR, ALONG FOOT TRAIL; RANCHO PALOS VERDES.

Location Detail:

Ecological:

Threat:

General: ASTRAGALUS FOUND HERE IN 1982; NO PVBB OBSERVED. CURRENTLY, THIS SITE REMAINS OPEN SPACE/COASTAL SAGE SCRUB HABITAT, BUT MAY BE DEVELOPED IN THE FUTURE. NO ASTRAGALUS FOUND IN 1986. GOOD AREA FOR RE-ESTABLISHMENT OF ASTRAGALUS.

Owner/Manager: PVT-FILIORUM CORP

Glaucopsyche lygdamus palosverdesensis

Palos Verdes blue butterfly

Element Code: IILEPG402A

Status

Federal: Endangered
State: None

NDDB Element Ranks

Global: G5T1
State: S1

Other Lists

CDFG Status:

Habitat Associations

General: RESTRICTED TO THE COOL, FOG-SHROUDED, SEAWARD SIDE OF PALOS VERDES HILLS, LOS ANGELES COUNTY.

Micro: HOST PLANT IS ASTRAGALUS TRICHOPODUS VAR. LONCHUS (LOCOWEED).

Occurrence No. 8 **Map Index:** 01771 **EO Index:** 23020

Occ Rank: None
Origin: Natural/Native occurrence
Presence: Possibly Extirpated
Trend: Unknown

Dates Last Seen

Element: 1981-XX-XX
Site: 1988-XX-XX

Record Last Updated: 2000-01-05

Quad Summary: Torrance (3311873/090D)

County Summary: Los Angeles

Lat/Long: 33.75584º / -118.36563º
UTM: Zone-11 N3735922 E373522
Mapping Precision: NON-SPECIFIC
Symbol Type: POINT
Radius: 1/5 mile

Township: 05S
Range: 14W
Section: XX **Qtr:** XX
Meridian: S
Elevation: 1,000 ft

Location: ALONG OLD CRENSHAW BLVD BTWN ALTAMIRA & PORTUGUESE CYNS, APPROX 0.5 MI N NARCISSA DR.

Location Detail:

Ecological:

Threat:

General: SITE DISCOVERED IN 1981; ALL LIFE STAGESPVBB OBSERVED. PLANT IS STILL FOUND AT THIS SITE, BUT IN MUCH REDUCED NUMBERS. SITE MAY BE WHERE PLANTS FROM THE TYPE LOCALITY WERE TRANSPLANTED IN 1976. SITE NOT YET DEVELOPED; SOME REC USE.

Owner/Manager: PVT-FILIORUM CORP

Glaucopsyche lygdamus palosverdesensis

Palos Verdes blue butterfly

Element Code: IILEPG402A

Status

Federal: Endangered
State: None

NDDB Element Ranks

Global: G5T1
State: S1

Other Lists

CDFG Status:

Habitat Associations

General: RESTRICTED TO THE COOL, FOG-SHROUDED, SEAWARD SIDE OF PALOS VERDES HILLS, LOS ANGELES COUNTY.

Micro: HOST PLANT IS ASTRAGALUS TRICHOPODUS VAR. LONCHUS (LOCOWEED).

Occurrence No. 16 **Map Index:** 01823 **EO Index:** 23009

Occ Rank: None
Origin: Natural/Native occurrence
Presence: Possibly Extirpated
Trend: Unknown

Dates Last Seen

Element: 1981-XX-XX
Site: 1988-XX-XX

Record Last Updated: 2000-01-05

Quad Summary: San Pedro (3311863/073A), Torrance (3311873/090D)

County Summary: Los Angeles

Lat/Long: 33.75028º / -118.34730º
UTM: Zone-11 N3735283 E375212
Mapping Precision: NON-SPECIFIC
Symbol Type: POINT
Radius: 1/5 mile

Township: 05S
Range: 14W
Section: XX **Qtr:** XX
Meridian: S
Elevation: 1,200 ft

Location: TOP OF SAN PEDRO HILL, BOUNDED BY CREST RD WEST; RANCHO PALOS VERDES.

Location Detail:

Ecological:

Threat: GRADING AND ENCROACHMENT BY ANNUAL GRASSES AND ORNAMENTALS.

General: PVBB AND ASTRAGALUS FOUND HERE IN 1981. PLANT OBSERVED IN 1983 BUT DESTROYED (EXCEPT FOR 5 PLANTS) BY GRADING IN APRIL 1983. 32 PLANTS IN 3 LOCATIONS FOUND IN 1985; ONLY 3 FOUND IN 1986. NO PVBB OBSERVED SINCE 1981 SITING.

Owner/Manager: PVT-S&S CONSTRUCTION CO

Glaucopsyche lygdamus palosverdesensis

Palos Verdes blue butterfly

Element Code: IILEPG402A

Status	NDDB Element Ranks	Other Lists
Federal: Endangered	**Global:** G5T1	**CDFG Status:**
State: None	**State:** S1	

Habitat Associations

General: RESTRICTED TO THE COOL, FOG-SHROUDED, SEAWARD SIDE OF PALOS VERDES HILLS, LOS ANGELES COUNTY.

Micro: HOST PLANT IS ASTRAGALUS TRICHOPODUS VAR. LONCHUS (LOCOWEED).

* SENSITIVE *

Occurrence No. 18 **Map Index:** 25610 **EO Index:** 5484

Dates Last Seen

Occ Rank: Excellent
Origin: Natural/Native occurrence
Presence: Presumed Extant
Trend: Fluctuating

Element: 2001-04-27
Site: 2001-04-27
Record Last Updated: 2007-09-28

Quad Summary: Torrance (3311873/090D)
County Summary: Los Angeles

* SENSITIVE *

Lat/Long:		**Township:**	
UTM:		**Range:**	
Mapping Precision:		**Section:**	**Qtr:**
Symbol Type:		**Meridian:**	
Radius:		**Elevation:**	

Location: *SENSITIVE* Location information suppressed.

Location Detail: Please contact the California Natural Diversity Database, California Department of Fish and Game, for more information:
(916) 324-3812.

Ecological: HABITAT CONSISTS OF REMNANT COASTAL SAGE SCRUB; BUTTERFLIES FEED ON DEERWEED AND MILKVETCH. CALIFORNIA GNATCATCHER ALSO PRESENT.5484

Threat: THREATS INCLUDE HABITAT DESTRUCTION AND OVERCOLLECTION BY BUTTERFLY COLLECTORS.

General:

Owner/Manager:

Glaucopsyche lygdamus palosverdesensis

Palos Verdes blue butterfly

Element Code: IILEPG402A

Status	NDDB Element Ranks	Other Lists
Federal: Endangered	**Global:** G5T1	**CDFG Status:**
State: None	**State:** S1	

Habitat Associations

General: RESTRICTED TO THE COOL, FOG-SHROUDED, SEAWARD SIDE OF PALOS VERDES HILLS, LOS ANGELES COUNTY.

Micro: HOST PLANT IS ASTRAGALUS TRICHOPODUS VAR. LONCHUS (LOCOWEED).

Occurrence No. 19 **Map Index:** 65035 **EO Index:** 65114

Occ Rank: Unknown
Origin: Natural/Native occurrence
Presence: Presumed Extant
Trend: Unknown

Dates Last Seen
Element: 2001-03-XX
Site: 2001-03-XX
Record Last Updated: 2007-09-28

Quad Summary: Redondo Beach (3311874/090C)
County Summary: Los Angeles

Lat/Long: 33.80281º / -118.39551º
UTM: Zone-11 N3741168 E370825
Mapping Precision: NON-SPECIFIC
Symbol Type: POLYGON
Area:

Township: 04S
Range: 14W
Section: 30 **Qtr:** NW
Meridian: S
Elevation: 50 ft

Location: MALAGA DUNES, MALAGA COVE.
Location Detail:
Ecological: A PERCHED DUNE FORMATION IN UPPER MALAGA CANYON, THAT IS DISJUNCT FROM THE BLOW SAND DUNE FORMATION AGAINST THE COASTAL BLUFFS EXTENDING ALONG TORRANCE BEACH TO THE NORTH OF THE MALAGA CANYON DISCHARGE. SITE IS DEGRADED DUE TO EXOTIC PLANTS
Threat: THREATENED BY EXPANSION OF EXOTIC VEGETATION.
General: SPECIES DISCOVERD IN 2001 BY BRAD RICHARDS. SPECIES ALSO NOTED DURING SURVEY FOR RHAPHIOMIDAS TERMINATUS TERMINATUS. IT IS LIKELY THERE ARE LESS THAN 100 INDIVIDUALS IN THIS POPULATION. FUTURE VIABILITY IS UNCERTAIN.
Owner/Manager: UNKNOWN

Lasionycteris noctivagans

silver-haired bat

Element Code: AMACC02010

Status	NDDB Element Ranks	Other Lists
Federal: None	**Global:** G5	**CDFG Status:**
State: None	**State:** S3S4	

Habitat Associations

General: PRIMARILY A COASTAL & MONTANE FOREST DWELLER FEEDING OVER STREAMS, PONDS & OPEN BRUSHY AREAS.

Micro: ROOSTS IN HOLLOW TREES, BENEATH EXFOLIATING BARK, ABANDONED WOODPECKER HOLES & RARELY UNDER ROCKS. NEEDS DRINKING WATER.

Occurrence No. 48 **Map Index:** 68564 **EO Index:** 68928

Occ Rank: Unknown
Origin: Natural/Native occurrence
Presence: Presumed Extant
Trend: Unknown

Dates Last Seen
Element: 1978-02-22
Site: 1978-02-22

Record Last Updated: 2007-03-20

Quad Summary: Los Alamitos (3311871/089D)
County Summary: Los Angeles

Lat/Long: 33.86108º / -118.10436º
UTM: Zone-11 N3747301 E397845
Mapping Precision: NON-SPECIFIC
Symbol Type: POINT
Radius: 1/10 mile

Township: 03S
Range: 12W
Section: 35 **Qtr:** SE
Meridian: S
Elevation: 60 ft

Location: BELLFLOWER, ABOUT 1 MILE SSW OF INTERSECTION OF INTERSTATES 605 AND 91.

Location Detail: MAPPED ACCORDING LOCATION DESCRIPTION AND LAT/LONG COORDINATES PROVIDED BY MANIS, WITH UNCERTAINTY OF 100M. LOCALITY GIVEN AS "CERRITOS, 18715 SAN GABRIEL."

Ecological:

Threat:

General: 1 FEMALE SPECIMEN (MVZ #181853) COLLECTED BY DENNY G. CONSTANTINE ON 22 FEB 1978.

Owner/Manager: UNKNOWN

Lasionycteris noctivagans

silver-haired bat

Element Code: AMACC02010

Status	NDDB Element Ranks	Other Lists
Federal: None	**Global:** G5	**CDFG Status:**
State: None	**State:** S3S4	

Habitat Associations

General: PRIMARILY A COASTAL & MONTANE FOREST DWELLER FEEDING OVER STREAMS, PONDS & OPEN BRUSHY AREAS.

Micro: ROOSTS IN HOLLOW TREES, BENEATH EXFOLIATING BARK, ABANDONED WOODPECKER HOLES & RARELY UNDER ROCKS. NEEDS DRINKING WATER.

Occurrence No. 50 **Map Index:** 68566 **EO Index:** 68930

Occ Rank: Unknown
Origin: Natural/Native occurrence
Presence: Presumed Extant
Trend: Unknown

Dates Last Seen
Element: 1986-11-18
Site: 1986-11-18

Record Last Updated: 2007-03-20

Quad Summary: Long Beach (3311872/089C)

County Summary: Los Angeles

Lat/Long:	33.79315º / -118.20057º	**Township:**	04S		
UTM:	Zone-11 N3739869 E388858	**Range:**	13W		
Mapping Precision:	SPECIFIC	**Section:**	26	**Qtr:**	SE
Symbol Type:	POINT	**Meridian:**	S		
Radius:	80 meters	**Elevation:**	10 ft		

Location: LONG BEACH, JUST SOUTH OF INTERSECTION OF 20TH ST AND MAINE AVE.

Location Detail: MAPPED ACCORDING TO LOCALITY DESCRIPTION AND LAT/LONG COORDINATES PROVIDED BY MANIS.

Ecological:

Threat:

General: 1 MALE SPECIMEN (MVZ #181854) COLLECTED AT "LONG BEACH, 1995 MAINE" BY DENNY G. CONSTANTINE ON 18 NOV 1986.

Owner/Manager: UNKNOWN

Lasiurus xanthinus

western yellow bat

Element Code: AMACC05070

Status	NDDB Element Ranks	Other Lists
Federal: None	**Global:** G5	**CDFG Status:**
State: None	**State:** S3	

Habitat Associations

General: FOUND IN VALLEY FOOTHILL RIPARIAN, DESERT RIPARIAN, DESERT WASH, AND PALM OASIS HABITATS.

Micro: ROOSTS IN TREES, PARTICULARLY PALMS. FORAGES OVER WATER AND AMONG TREES.

Occurrence No. 12 **Map Index:** 23781 **EO Index:** 58907

Occ Rank: Unknown
Origin: Natural/Native occurrence
Presence: Presumed Extant
Trend: Unknown

Dates Last Seen
Element: 1990-10-17
Site: 1990-10-17

Record Last Updated: 2004-12-21

Quad Summary: Los Alamitos (3311871/089D)

County Summary: Orange

Lat/Long: 33.78367º / -118.02256º
UTM: Zone-11 N3738639 E405328
Mapping Precision: NON-SPECIFIC
Symbol Type: POINT
Radius: 1 mile

Township: 04S
Range: 11W
Section: XX **Qtr:** XX
Meridian: S
Elevation: 35 ft

Location: GARDEN GROVE.

Location Detail: EXACT LOCATION UNKNOWN. MAPPED IN THE VICINTY OF GARDEN GROVE.

Ecological:

Threat:

General: 1 FEMALE SPECIMEN COLLECTED 17 OCT 1990 BY D. CONSTANTINE AT "GARDEN GROVE." DEPOSITED AT LACM #93996.

Owner/Manager: UNKNOWN

Lasthenia glabrata ssp. coulteri

Coulter's goldfields

Element Code: PDAST5L0A1

Status	NDDB Element Ranks	Other Lists
Federal: None	**Global:** G4T3	**CNPS List:** 1B.1
State: None	**State:** S2.1	

Habitat Associations

General: COASTAL SALT MARSHES, PLAYAS, VALLEY AND FOOTHILL GRASSLAND, VERNAL POOLS.

Micro: USUALLY FOUND ON ALKALINE SOILS IN PLAYAS, SINKS, AND GRASSLANDS. 1-1400M.

Occurrence No. 25 **Map Index:** 23784 **EO Index:** 25094

Occ Rank: None
Origin: Natural/Native occurrence
Presence: Possibly Extirpated
Trend: Unknown

Dates Last Seen
Element: 1901-04-10
Site: 1901-04-10

Record Last Updated: 1993-07-14

Quad Summary: Inglewood (3311883/090A)

County Summary: Los Angeles

Lat/Long: 33.98167º / -118.33078º
UTM: Zone-11 N3760921 E377074
Mapping Precision: NON-SPECIFIC
Symbol Type: POINT
Radius: 1 mile

Township: 02S
Range: 14W
Section: 22 **Qtr:** XX
Meridian: S
Elevation: 160 ft

Location: HYDE PARK.

Location Detail:

Ecological:

Threat:

General: ONLY SOURCE OF SITE INFORMATION IS COLLECTION BY ABRAMS #1454. NEEDS FIELDWORK. PROBABLY EXTIRPATED ACCORDING TO S. BOYD.

Owner/Manager: UNKNOWN

Lasthenia glabrata ssp. coulteri

Coulter's goldfields

Element Code: PDAST5L0A1

Status	NDDB Element Ranks	Other Lists
Federal: None	**Global:** G4T3	**CNPS List:** 1B.1
State: None	**State:** S2.1	

Habitat Associations

General: COASTAL SALT MARSHES, PLAYAS, VALLEY AND FOOTHILL GRASSLAND, VERNAL POOLS.

Micro: USUALLY FOUND ON ALKALINE SOILS IN PLAYAS, SINKS, AND GRASSLANDS. 1-1400M.

Occurrence No. 26 **Map Index:** 23783 **EO Index:** 24245

Occ Rank: None
Origin: Natural/Native occurrence
Presence: Possibly Extirpated
Trend: Unknown

Dates Last Seen
Element: 1917-04-01
Site: 1917-04-01
Record Last Updated: 1993-07-14

Quad Summary: Inglewood (3311883/090A)
County Summary: Los Angeles

Lat/Long: 33.88942º / -118.31857º
UTM: Zone-11 N3750677 E378070
Mapping Precision: NON-SPECIFIC
Symbol Type: POINT
Radius: 1 mile

Township: 03S
Range: 14W
Section: XX **Qtr:** XX
Meridian: S
Elevation: 50 ft

Location: SLOUGH NEAR GARDENA.
Location Detail:
Ecological: GROWING IN MOIST PASTURE.
Threat:
General: ONLY SOURCE OF SITE INFORMATION IS COLLECTION BY I. JOHNSTON IN 1917. PROBABLY EXTIRPATED ACCORDING TO S. BOYD. NEEDS FIELDWORK.
Owner/Manager: UNKNOWN

Lasthenia glabrata ssp. coulteri

Coulter's goldfields

Element Code: PDAST5L0A1

Status	NDDB Element Ranks	Other Lists
Federal: None	**Global:** G4T3	**CNPS List:** 1B.1
State: None	**State:** S2.1	

Habitat Associations

General: COASTAL SALT MARSHES, PLAYAS, VALLEY AND FOOTHILL GRASSLAND, VERNAL POOLS.

Micro: USUALLY FOUND ON ALKALINE SOILS IN PLAYAS, SINKS, AND GRASSLANDS. 1-1400M.

Occurrence No. 28 **Map Index:** 23779 **EO Index:** 22063

Occ Rank: None
Origin: Natural/Native occurrence
Presence: Possibly Extirpated
Trend: Unknown

Dates Last Seen
Element: 1932-XX-XX
Site: 1932-XX-XX

Record Last Updated: 1993-07-14

Quad Summary: Los Alamitos (3311871/089D)

County Summary: Orange

Lat/Long: 33.81425º / -118.03212º
UTM: Zone-11 N3742039 E404477
Mapping Precision: NON-SPECIFIC
Symbol Type: POINT
Radius: 1 mile

Township: 04S
Range: 11W
Section: XX **Qtr:** XX
Meridian: S
Elevation: 40 ft

Location: CYPRESS.
Location Detail:
Ecological:
Threat:
General: ONLY SOURCE OF SITE INFORMATION IS ORANGE COUNTY DATA BASE. POPULATION LIKELY EXTIRPATED ACCORDING TO ROBERTS. NO OTHER INFORMATION GIVEN. NEEDS FIELDWORK.
Owner/Manager: UNKNOWN

Lasthenia glabrata ssp. coulteri

Coulter's goldfields

Element Code: PDAST5L0A1

Status	NDDB Element Ranks	Other Lists
Federal: None	**Global:** G4T3	**CNPS List:** 1B.1
State: None	**State:** S2.1	

Habitat Associations

General: COASTAL SALT MARSHES, PLAYAS, VALLEY AND FOOTHILL GRASSLAND, VERNAL POOLS.

Micro: USUALLY FOUND ON ALKALINE SOILS IN PLAYAS, SINKS, AND GRASSLANDS. 1-1400M.

Occurrence No. 29 **Map Index:** 23780 **EO Index:** 21299

Occ Rank: None
Origin: Natural/Native occurrence
Presence: Possibly Extirpated
Trend: Unknown

Dates Last Seen
Element: 1937-XX-XX
Site: 1937-XX-XX

Record Last Updated: 1993-07-14

Quad Summary: Los Alamitos (3311871/089D)

County Summary: Orange

Lat/Long: 33.79875º / -118.06117º
UTM: Zone-11 N3740348 E401770
Mapping Precision: NON-SPECIFIC
Symbol Type: POINT
Radius: 1 mile

Township: 04S
Range: 11W
Section: XX **Qtr:** XX
Meridian: S
Elevation: 25 ft

Location: LOS ALAMITOS.
Location Detail:
Ecological:
Threat:
General: ORANGE COUNTY DATA BASE IS ONLY SOURCE OF SITE INFORMATION. POPULATION PROBABLY EXTIRPATED ACCORDING TO ROBERTS. NEEDS FIELDWORK.
Owner/Manager: UNKNOWN

Lasthenia glabrata ssp. coulteri

Coulter's goldfields

Element Code: PDAST5L0A1

Status	NDDB Element Ranks	Other Lists
Federal: None	**Global:** G4T3	**CNPS List:** 1B.1
State: None	**State:** S2.1	

Habitat Associations

General: COASTAL SALT MARSHES, PLAYAS, VALLEY AND FOOTHILL GRASSLAND, VERNAL POOLS.

Micro: USUALLY FOUND ON ALKALINE SOILS IN PLAYAS, SINKS, AND GRASSLANDS. 1-1400M.

Occurrence No. 30 **Map Index:** 23781 **EO Index:** 21298

Occ Rank: None
Origin: Natural/Native occurrence
Presence: Possibly Extirpated
Trend: Unknown

Dates Last Seen
Element: 1934-XX-XX
Site: 1934-XX-XX

Record Last Updated: 1993-07-14

Quad Summary: Los Alamitos (3311871/089D)

County Summary: Orange

Lat/Long: 33.78367º / -118.02256º
UTM: Zone-11 N3738639 E405328
Mapping Precision: NON-SPECIFIC
Symbol Type: POINT
Radius: 1 mile

Township: 04S
Range: 11W
Section: XX **Qtr:** XX
Meridian: S
Elevation: 35 ft

Location: GARDEN GROVE.
Location Detail:
Ecological:
Threat:
General: ORANGE COUNTY DATA BASE IS ONLY SOURCE OF SITE INFORMATION. POPULATION PROBABLY EXTIRPATED ACCORDING TO ROBERTS. NEEDS FIELDWORK.
Owner/Manager: UNKNOWN

Lasthenia glabrata ssp. coulteri

Coulter's goldfields

Element Code: PDAST5L0A1

Status	NDDB Element Ranks	Other Lists
Federal: None	**Global:** G4T3	**CNPS List:** 1B.1
State: None	**State:** S2.1	

Habitat Associations

General: COASTAL SALT MARSHES, PLAYAS, VALLEY AND FOOTHILL GRASSLAND, VERNAL POOLS.

Micro: USUALLY FOUND ON ALKALINE SOILS IN PLAYAS, SINKS, AND GRASSLANDS. 1-1400M.

Occurrence No. 31 **Map Index:** 23777 **EO Index:** 7478

Occ Rank: None
Origin: Natural/Native occurrence
Presence: Possibly Extirpated
Trend: Unknown

Dates Last Seen
Element: 1932-03-08
Site: 1932-03-08
Record Last Updated: 1993-08-13

Quad Summary: Seal Beach (3311861/072A)
County Summary: Orange

Lat/Long: 33.71800º / -118.06641º
UTM: Zone-11 N3731399 E401193
Mapping Precision: NON-SPECIFIC
Symbol Type: POLYGON
Area:

Township: 05S
Range: 11W
Section: XX **Qtr:** XX
Meridian: S
Elevation: 5 ft

Location: SUNSET BEACH, ALONG EDGE OF SALT MARSH.
Location Detail: NEAR SOUTHERN CITY LIMITS OF SUNSET BEACH.
Ecological: GROWING IN THE SUN ALONG THE EDGE OF SALT MARSH.
Threat:
General: ONLY SOURCE OF SITE INFORMATION IS COLLECTION BY WOLF #2691 UCR.
Owner/Manager: UNKNOWN

Lasthenia glabrata ssp. coulteri

Coulter's goldfields

Element Code: PDAST5L0A1

Status	NDDB Element Ranks	Other Lists
Federal: None	**Global:** G4T3	**CNPS List:** 1B.1
State: None	**State:** S2.1	

Habitat Associations

General: COASTAL SALT MARSHES, PLAYAS, VALLEY AND FOOTHILL GRASSLAND, VERNAL POOLS.

Micro: USUALLY FOUND ON ALKALINE SOILS IN PLAYAS, SINKS, AND GRASSLANDS. 1-1400M.

Occurrence No. 32 **Map Index:** 23778 **EO Index:** 7477

Occ Rank: Unknown
Origin: Natural/Native occurrence
Presence: Presumed Extant
Trend: Unknown

Dates Last Seen
Element: 1932-XX-XX
Site: 1932-XX-XX

Record Last Updated: 1993-07-14

Quad Summary: Seal Beach (3311861/072A)

County Summary: Orange

Lat/Long: 33.69572º / -118.03635º
UTM: Zone-11 N3728900 E403953
Mapping Precision: NON-SPECIFIC
Symbol Type: POLYGON
Area:

Township: 05S
Range: 11W
Section: XX **Qtr:** XX
Meridian: S
Elevation: 5 ft

Location: BOLSA CHICA SALT MARSH.

Location Detail:

Ecological: GROWING IN SALT MARSH.

Threat:

General: ORANGE COUNTY DATABASE IS ONLY SOURCE OF SITE INFORMATION FOR THIS POPULATION. NEEDS FIELDWORK.

Owner/Manager: DFG-BOLSA CHICA ER, PVT

Lasthenia glabrata ssp. coulteri

Coulter's goldfields

Element Code: PDAST5L0A1

Status	NDDB Element Ranks	Other Lists
Federal: None	**Global:** G4T3	**CNPS List:** 1B.1
State: None	**State:** S2.1	

Habitat Associations

General: COASTAL SALT MARSHES, PLAYAS, VALLEY AND FOOTHILL GRASSLAND, VERNAL POOLS.

Micro: USUALLY FOUND ON ALKALINE SOILS IN PLAYAS, SINKS, AND GRASSLANDS. 1-1400M.

Occurrence No. 50 **Map Index:** 02270 **EO Index:** 2507

Occ Rank: Unknown
Origin: Natural/Native occurrence
Presence: Presumed Extant
Trend: Unknown

Dates Last Seen
Element: 1949-04-18
Site: 1949-04-18

Record Last Updated: 1995-08-01

Quad Summary: Seal Beach (3311861/072A), Los Alamitos (3311871/089D)

County Summary: Orange

Lat/Long: 33.73881º / -118.07696º
UTM: Zone-11 N3733717 E400239
Mapping Precision: NON-SPECIFIC
Symbol Type: POINT
Radius: 1 mile

Township: 05S
Range: 12W
Section: 18 **Qtr:** NW
Meridian: S
Elevation: 3 ft

Location: SEAL BEACH.

Location Detail: MAPPED AT SEAL BEACH WILDLIFE REFUGE.

Ecological: COASTAL SALINE MARSH.

Threat:

General: ONLY SOURCE OF INFORMATION FOR THIS SITE IS 1949 COLLECTION BY ROSE.

Owner/Manager: UNKNOWN

Lasthenia glabrata ssp. coulteri

Coulter's goldfields

Element Code: PDAST5L0A1

Status	NDDB Element Ranks	Other Lists
Federal: None	**Global:** G4T3	**CNPS List:** 1B.1
State: None	**State:** S2.1	

Habitat Associations

General: COASTAL SALT MARSHES, PLAYAS, VALLEY AND FOOTHILL GRASSLAND, VERNAL POOLS.

Micro: USUALLY FOUND ON ALKALINE SOILS IN PLAYAS, SINKS, AND GRASSLANDS. 1-1400M.

Occurrence No. 51 **Map Index:** 31520 **EO Index:** 2502

Occ Rank: Unknown
Origin: Natural/Native occurrence
Presence: Presumed Extant
Trend: Unknown

Dates Last Seen
Element: 1935-03-24
Site: 1935-03-24

Record Last Updated: 1995-08-01

Quad Summary: Whittier (3311881/089A), La Habra (3311788/088B)

County Summary: Los Angeles, Orange

Lat/Long: 33.90290º / -117.98902º
UTM: Zone-11 N3751830 E408560
Mapping Precision: NON-SPECIFIC
Symbol Type: POINT
Radius: 1 mile

Township: 03S
Range: 11W
Section: 13 **Qtr:** SW
Meridian: S
Elevation: 175 ft

Location: 1 MILE NORTH OF BUENA PARK IN VALLEY TO THE WEST OF WEST COYOTE HILLS.

Location Detail: MAPPED IN VICINITY OF COYOTE CREEK.

Ecological:

Threat:

General: ONLY SOURCE OF INFORMATION FOR THIS SITE IS 1935 COLLECTION BY WOLF.

Owner/Manager: UNKNOWN

Lasthenia glabrata ssp. coulteri

Coulter's goldfields

Element Code: PDAST5L0A1

Status	NDDB Element Ranks	Other Lists
Federal: None	**Global:** G4T3	**CNPS List:** 1B.1
State: None	**State:** S2.1	

Habitat Associations

General: COASTAL SALT MARSHES, PLAYAS, VALLEY AND FOOTHILL GRASSLAND, VERNAL POOLS.

Micro: USUALLY FOUND ON ALKALINE SOILS IN PLAYAS, SINKS, AND GRASSLANDS. 1-1400M.

Occurrence No. 61 **Map Index:** 48235 **EO Index:** 48235

Occ Rank: None
Origin: Natural/Native occurrence
Presence: Possibly Extirpated
Trend: Unknown

Dates Last Seen
Element: 1939-04-20
Site: 1939-04-20

Record Last Updated: 2002-07-12

Quad Summary: Whittier (3311881/089A)

County Summary: Los Angeles

Lat/Long: 33.90613º / -118.08388º
UTM: Zone-11 N3752277 E399794
Mapping Precision: NON-SPECIFIC
Symbol Type: POINT
Radius: 1 mile

Township: 03S
Range: 12W
Section: 13 **Qtr:** SE
Meridian: S
Elevation: 90 ft

Location: NORWALK.

Location Detail: EXACT LOCATION UNKNOWN, NORWALK IS FAIRLY THOROUGHLY DEVELOPED, MAPPED IN EASTERN 1/2 OF SE 1/4 OF SECTION 13 AT NORWALK POST OFFICE.

Ecological: FIELDS.

Threat:

General: ONLY SOURCE OF INFORMATION FOR THIS SITE IS 1939 COLLECTION BY JEPSON. NORWALK IS FAIRLY DEVELOPED & FIELDS FROM 1939 DO NOT APPEAR TO EXIST. NEEDS FIELDWORK.

Owner/Manager: UNKNOWN

Microtus californicus stephensi

south coast marsh vole

Element Code: AMAFF11035

Status	NDDB Element Ranks	Other Lists
Federal: None	**Global:** G5T1T2	**CDFG Status:** SC
State: None	**State:** S1S2	

Habitat Associations

General: TIDAL MARSHES IN LOS ANGELES, ORANGE AND SOUTHERN VENTURA COUNTIES.

Micro:

Occurrence No. 1 **Map Index:** 58944 **EO Index:** 58980

Occ Rank: Unknown
Origin: Natural/Native occurrence
Presence: Presumed Extant
Trend: Unknown

Dates Last Seen
Element: 1977-03-17
Site: 1977-03-17

Record Last Updated: 2004-12-22

Quad Summary: Inglewood (3311883/090A)

County Summary: Los Angeles

Lat/Long: 33.99722º / -118.36350º
UTM: Zone-11 N3762685 E374074
Mapping Precision: NON-SPECIFIC
Symbol Type: POINT
Radius: 1/5 mile

Township: 02S
Range: 14W
Section: 17 **Qtr:** XX
Meridian: S
Elevation: 300 ft

Location: BALDWIN HILLS. ABOUT 0.1 MILES SOUTHWEST OF INTERSECTION BETWEEN STOCKER STREET AND FAIRFAX AVENUE.

Location Detail: 1977 SPECIMENS COLLECTED AT THIS SPECIFIC LOCATION. 1957 SPECIMENS COLLECTED FROM THE GENERAL VICINTY OF BALDWIN HILLS.

Ecological:

Threat:

General: 2 FEMALE SPECIMENS COLLECTED 10 MAR 1977 AT "BALDWIN HILLS, 200 YDS SE OF STOCKER ST & FAIRFAX AVE." LACM #87761 & 87786. ALSO FROM THE GENERAL LOCALITY OF BALDWIN HILLS: 4 FEMALES & 2 MALES COLLECTED 9 & 14 APR 1957. LACM #10336-10341.

Owner/Manager: UNKNOWN

Microtus californicus stephensi

south coast marsh vole

Element Code: AMAFF11035

Status

Federal: None
State: None

NDDB Element Ranks

Global: G5T1T2
State: S1S2

Other Lists

CDFG Status: SC

Habitat Associations

General: TIDAL MARSHES IN LOS ANGELES, ORANGE AND SOUTHERN VENTURA COUNTIES.
Micro:

Occurrence No. 2 **Map Index:** 01722 **EO Index:** 58981

Occ Rank: Unknown
Origin: Natural/Native occurrence
Presence: Presumed Extant
Trend: Unknown

Dates Last Seen

Element: 1957-04-14
Site: 1957-04-14

Record Last Updated: 2004-12-22

Quad Summary: Beverly Hills (3411814/111C), Inglewood (3311883/090A), Venice (3311884/090B), Hollywood (3411813/111D)
County Summary: Los Angeles

Lat/Long: 33.99055º / -118.38285º
UTM: Zone-11 N3761970 E372277
Mapping Precision: NON-SPECIFIC
Symbol Type: POINT
Radius: 1 mile

Township: 02S
Range: 14W
Section: 18 **Qtr:** SE
Meridian: S
Elevation: 200 ft

Location: CULVER CITY.
Location Detail: EXACT LOCATION NOT KNOWN, MAPPED IN THE GENERAL VICINTY OF CULVER CITY & BALDWIN HILLS.
Ecological:
Threat:
General: 1 M & 8 U SPECIMENS COLLECTED 14, 15 & 26 JUL 1927 BY G. ASHCRAFT AT "CULVER CITY." LACM #21357-21363 & 21365 & FMNH #34420. ALSO FROM "BALDWIN HILLS" 3 F & 2 M COLLECTED 9 & 14 APR 1957 BY C. MCLAUGHLIN. LACM #10336-10341.
Owner/Manager: UNKNOWN

Microtus californicus stephensi

south coast marsh vole

Element Code: AMAFF11035

Status

Federal: None
State: None

NDDB Element Ranks

Global: G5T1T2
State: S1S2

Other Lists

CDFG Status: SC

Habitat Associations

General: TIDAL MARSHES IN LOS ANGELES, ORANGE AND SOUTHERN VENTURA COUNTIES.
Micro:

Occurrence No. 5 **Map Index:** 02270 **EO Index:** 58990

Occ Rank: Unknown
Origin: Natural/Native occurrence
Presence: Presumed Extant
Trend: Unknown

Dates Last Seen

Element: 1988-04-10
Site: 1988-04-10

Record Last Updated: 2004-12-22

Quad Summary: Seal Beach (3311861/072A), Los Alamitos (3311871/089D)
County Summary: Orange

Lat/Long: 33.73881º / -118.07696º
UTM: Zone-11 N3733717 E400239
Mapping Precision: NON-SPECIFIC
Symbol Type: POINT
Radius: 1 mile

Township: 05S
Range: 12W
Section: 18 **Qtr:** NW
Meridian: S
Elevation: 3 ft

Location: SEAL BEACH WILDLIFE REFUGE.

Location Detail: SPECIMEN COLLECTED AT SEAL BEACH REFUGE. SPECIMENS ALSO COLLECTED FROM GENERAL AREA OF ANAHEIM BAY.

Ecological:

Threat:

General: 1 FEMALE SPECIMEN COLLECTED 10 APR 1988 BY S. GEORGE AT "SEAL BEACH NATIONAL WILDLIFE REFUGE" LACM #89133. 37 SPECIMENS COLLECTED FROM "ANAHEIM BAY" 18-20 MAY 1932 BY J. VON BLOEKER, LACM #3335-3371.

Owner/Manager: UNKNOWN

Microtus californicus stephensi

south coast marsh vole

Element Code: AMAFF11035

Status

Federal: None
State: None

NDDB Element Ranks

Global: G5T1T2
State: S1S2

Other Lists

CDFG Status: SC

Habitat Associations

General: TIDAL MARSHES IN LOS ANGELES, ORANGE AND SOUTHERN VENTURA COUNTIES.
Micro:

Occurrence No. 6 **Map Index:** 58955 **EO Index:** 58991

Occ Rank: Unknown
Origin: Natural/Native occurrence
Presence: Presumed Extant
Trend: Unknown

Dates Last Seen

Element: 1916-06-30
Site: 1916-06-30

Record Last Updated: 2004-12-22

Quad Summary: Seal Beach (3311861/072A)
County Summary: Orange

Lat/Long: 33.71880º / -118.07100º
UTM: Zone-11 N3731493 E400767
Mapping Precision: NON-SPECIFIC
Symbol Type: POINT
Radius: 2/5 mile

Township: 05S
Range: 11W
Section: 30 **Qtr:** XX
Meridian: S
Elevation: 15 ft

Location: SUNSET BEACH, ORANGE COUNTY.
Location Detail:
Ecological:
Threat:
General: ONE FEMALE SPECIMEN COLLECTED 30 JUN 1916 BY L. WYMAN AT "SUNSET BEACH." DEPOSITED AT LACM #206.
Owner/Manager: UNKNOWN

Nama stenocarpum

mud nama

Element Code: PDHYD0A0H0

Status	NDDB Element Ranks	Other Lists
Federal: None	**Global:** G4G5	**CNPS List:** 2.2
State: None	**State:** S1S2	

Habitat Associations

General: MARSHES AND SWAMPS.

Micro: LAKE SHORES, RIVER BANKS, INTERMITTENTLY WET AREAS. 5-500M.

Occurrence No. 10 **Map Index:** 48666 **EO Index:** 48666

Occ Rank: Unknown
Origin: Natural/Native occurrence
Presence: Presumed Extant
Trend: Unknown

Dates Last Seen
Element: 1932-07-01
Site: 1932-07-01

Record Last Updated: 2002-08-23

Quad Summary: Seal Beach (3311861/072A), Los Alamitos (3311871/089D)

County Summary: Orange

Lat/Long: 33.76171º / -118.04271º
UTM: Zone-11 N3736223 E403437
Mapping Precision: NON-SPECIFIC
Symbol Type: POINT
Radius: 1 mile

Township: 05S
Range: 11W
Section: 09 **Qtr:** XX
Meridian: S
Elevation:

Location: ANAHEIM CREEK, ORANGE COUNTY.

Location Detail: EXACT LOCATION UNKNOWN. ANAHEIM CREEK IDENTIFIED BY JEPSON NAME/PLACE INDEX AS 2 MILES WEST OF WESTMINSTER, MAPPED AT THAT LOCATION.

Ecological:

Threat:

General: ONLY SOURCE OF INFORMATION FOR THIS SITE IS 1932 COLLECTION BY BOOTH. NEEDS FIELDWORK. 1932 COLLECTION BY BOOTH AT ANAHEIM MARSH ATTRIBUTED TO THIS SITE AS WELL.

Owner/Manager: UNKNOWN

Nasturtium gambelii

Gambel's water cress

Element Code: PDBRA270V0

Status	NDDB Element Ranks	Other Lists
Federal: Endangered	**Global:** G1	**CNPS List:** 1B.1
State: Threatened	**State:** S1.1	

Habitat Associations

General: MARSHES AND SWAMPS.

Micro: FRESHWATER AND BRACKISH MARSHES AT THE MARGINS OF LAKES AND ALONG STREAMS, IN OR JUST ABOVE THE WATER LEVEL. 5-1305M.

Occurrence No. 13 **Map Index:** 72461 **EO Index:** 73431

Occ Rank: None
Origin: Introduced Back into Native Hab./Range
Presence: Possibly Extirpated
Trend: Unknown

Dates Last Seen
Element: 1908-07-25
Site: 1908-07-25

Record Last Updated: 2008-10-09

Quad Summary: Newport Beach (3311768/071B), Seal Beach (3311861/072A)

County Summary: Orange

Lat/Long: 33.65882º / -117.99974º
UTM: Zone-11 N3724776 E407306
Mapping Precision: NON-SPECIFIC
Symbol Type: POINT
Radius: 1 mile

Township: 06S
Range: 11W
Section: 14 **Qtr:** XX
Meridian: S
Elevation:

Location: HUNTINGTON BEACH.

Location Detail: EXACT LOCATION UNKNOWN. MAPPED BY CNDDB AS BEST GUESS IN VICINITY OF HUNTINGTON BEACH.

Ecological:

Threat: SITE LIKELY EXTIRPATED BY DEVELOPMENT.

General: ONLY SOURCE OF INFORMATION FOR THIS SITE IS A 1908 CONDIT COLLECTION MENTIONED IN "A CHECKLIST OF THE VASCULAR PLANTS OF ORANGE COUNTY, CA" BY F. ROBERTS. ID OF SPECIMEN SHOULD BE CHECKED. NEEDS FIELDWORK.

Owner/Manager: UNKNOWN

Navarretia fossalis

Moran's navarretia

Element Code: PDPLM0C080

Status	NDDB Element Ranks	Other Lists
Federal: Threatened	**Global:** G2	**CNPS List:** 1B.1
State: None	**State:** S2.1	

Habitat Associations

General: VERNAL POOLS, CHENOPOD SCRUB, MARSHES AND SWAMPS, PLAYAS.

Micro: SAN DIEGO HARDPAN & SAN DIEGO CLAYPAN VERNAL POOLS; IN SWALES & V.P'S, OFTEN SURR. BY OTHER HABITAT TYPES. 30-1300M.

Occurrence No. 40 **Map Index:** 28742 **EO Index:** 47436

Occ Rank: None
Origin: Natural/Native occurrence
Presence: Extirpated
Trend: Unknown

Dates Last Seen
Element: 1906-07-19
Site: 1906-07-19

Record Last Updated: 2002-03-15

Quad Summary: Inglewood (3311883/090A)

County Summary: Los Angeles

Lat/Long: 33.95930º / -118.35104º
UTM: Zone-11 N3758465 E375170
Mapping Precision: NON-SPECIFIC
Symbol Type: POINT
Radius: 1 mile

Township: 02S
Range: 14W
Section: XX **Qtr:** XX
Meridian: S
Elevation: 100 ft

Location: SINK NEAR INGLEWOOD.

Location Detail: MAPPED IN GENERAL VICINITY OF INGLEWOOD BY CNDDB.

Ecological: IN SINK.

Threat:

General: ONLY SOURCE OF INFO FOR THIS SITE IS 1906 COLLECTION BY PEIRSON, LISTED IN BOYD'S ARTICLE. MUCH OF AREA IS NOW DEVELOPED. SITE IS EXTIRPATED ACCORDING TO S. BOYD. THIS LOCATION IS ABOUT 75 KM WEST OF THE NEAREST RIVERSIDE COUNTY SITE.

Owner/Manager: UNKNOWN

Navarretia prostrata

prostrate vernal pool navarretia

Element Code: PDPLM0C0Q0

Status	NDDB Element Ranks	Other Lists
Federal: None	**Global:** G2?	**CNPS List:** 1B.1
State: None	**State:** S2.1?	

Habitat Associations

General: COASTAL SCRUB, VALLEY AND FOOTHILL GRASSLAND, VERNAL POOLS.

Micro: ALKALINE SOILS IN GRASSLAND, OR IN VERNAL POOLS. MESIC, ALKALINE SITES. 15-700M.

Occurrence No. 10 **Map Index:** 39864 **EO Index:** 47944

Occ Rank: None
Origin: Natural/Native occurrence
Presence: Possibly Extirpated
Trend: Unknown

Dates Last Seen
Element: 1882-05-XX
Site: 1882-05-XX

Record Last Updated: 2002-05-20

Quad Summary: Torrance (3311873/090D), Long Beach (3311872/089C)

County Summary: Los Angeles

Lat/Long: 33.79001º / -118.24785º
UTM: Zone-11 N3739572 E384477
Mapping Precision: NON-SPECIFIC
Symbol Type: POINT
Radius: 1 mile

Township: 04S
Range: 13W
Section: 33 **Qtr:** XX
Meridian: S
Elevation: 30 ft

Location: WILMINGTON.
Location Detail:
Ecological:
Threat:
General: NEEDS FIELDWORK. POPULATION PROBABLY EXTIRPATED.
Owner/Manager: UNKNOWN

Navarretia prostrata

prostrate vernal pool navarretia

Element Code: PDPLM0C0Q0

Status	NDDB Element Ranks	Other Lists
Federal: None	**Global:** G2?	**CNPS List:** 1B.1
State: None	**State:** S2.1?	

Habitat Associations

General: COASTAL SCRUB, VALLEY AND FOOTHILL GRASSLAND, VERNAL POOLS.

Micro: ALKALINE SOILS IN GRASSLAND, OR IN VERNAL POOLS. MESIC, ALKALINE SITES. 15-700M.

Occurrence No. 11 **Map Index:** 26503 **EO Index:** 47952

Occ Rank: None
Origin: Natural/Native occurrence
Presence: Possibly Extirpated
Trend: Unknown

Dates Last Seen
Element: 1895-05-XX
Site: 1895-05-XX

Record Last Updated: 2002-05-20

Quad Summary: Whittier (3311881/089A), South Gate (3311882/089B)

County Summary: Los Angeles

Lat/Long: 33.94216º / -118.13586º
UTM: Zone-11 N3756324 E395032
Mapping Precision: NON-SPECIFIC
Symbol Type: POINT
Radius: 1 mile

Township: 03S
Range: 12W
Section: XX **Qtr:** XX
Meridian: S
Elevation: 120 ft

Location: DOWNEY.
Location Detail:
Ecological:
Threat:
General: NEEDS FIELDWORK. PROBABLY EXTIRPATED.
Owner/Manager: UNKNOWN

Navarretia prostrata

prostrate vernal pool navarretia

Element Code: PDPLM0C0Q0

Status	NDDB Element Ranks	Other Lists
Federal: None	**Global:** G2?	**CNPS List:** 1B.1
State: None	**State:** S2.1?	

Habitat Associations

General: COASTAL SCRUB, VALLEY AND FOOTHILL GRASSLAND, VERNAL POOLS.

Micro: ALKALINE SOILS IN GRASSLAND, OR IN VERNAL POOLS. MESIC, ALKALINE SITES. 15-700M.

Occurrence No. 12 **Map Index:** 01965 **EO Index:** 47953

Occ Rank: None
Origin: Natural/Native occurrence
Presence: Possibly Extirpated
Trend: Unknown

Dates Last Seen
Element: 190X-XX-XX
Site: 190X-XX-XX

Record Last Updated: 2002-05-20

Quad Summary: South Gate (3311882/089B)
County Summary: Los Angeles

Lat/Long: 33.90327º / -118.22273º
UTM: Zone-11 N3752103 E386952
Mapping Precision: NON-SPECIFIC
Symbol Type: POINT
Radius: 1 mile

Township: 03S
Range: 13W
Section: XX **Qtr:** XX
Meridian: S
Elevation: 70 ft

Location: COMPTON.
Location Detail:
Ecological:
Threat:
General: NEEDS FIELDWORK. PROBABLY EXTIRPATED.
Owner/Manager: UNKNOWN

Navarretia prostrata

prostrate vernal pool navarretia

Element Code: PDPLM0C0Q0

Status	NDDB Element Ranks	Other Lists
Federal: None	**Global:** G2?	**CNPS List:** 1B.1
State: None	**State:** S2.1?	

Habitat Associations

General: COASTAL SCRUB, VALLEY AND FOOTHILL GRASSLAND, VERNAL POOLS.

Micro: ALKALINE SOILS IN GRASSLAND, OR IN VERNAL POOLS. MESIC, ALKALINE SITES. 15-700M.

Occurrence No. 13 **Map Index:** 01899 **EO Index:** 47954

Occ Rank: None
Origin: Natural/Native occurrence
Presence: Possibly Extirpated
Trend: Unknown

Dates Last Seen
Element: 1963-05-08
Site: 1963-05-08

Record Last Updated: 2002-05-20

Quad Summary: Inglewood (3311883/090A)

County Summary: Los Angeles

Lat/Long: 33.90278º / -118.31035º
UTM: Zone-11 N3752149 E378850
Mapping Precision: NON-SPECIFIC
Symbol Type: POINT
Radius: 1 mile

Township: 03S
Range: 14W
Section: 14 **Qtr:** SE
Meridian: S
Elevation: 50 ft

Location: JUNCTION OF ROSECRANS AVENUE AND WESTERN AVENUE, NORTH OF GARDENA.

Location Detail: JUST W OF JCT.

Ecological: IN GRASSY MEADOW, IN ADOBE SOIL. APPARENTLY USED TO BE BOGGY IN EARLY SPRING.

Threat:

General: NEEDS FIELDWORK. PROBABLY EXTIRPATED. COLLECTION FROM "WESTERN AVENUE AT 131ST STREET" (GOULD #2353) ALSO ATTRIBUTED TO THIS LOCATION.

Owner/Manager: UNKNOWN

Navarretia prostrata

prostrate vernal pool navarretia

Element Code: PDPLM0C0Q0

Status	NDDB Element Ranks	Other Lists
Federal: None	**Global:** G2?	**CNPS List:** 1B.1
State: None	**State:** S2.1?	

Habitat Associations

General: COASTAL SCRUB, VALLEY AND FOOTHILL GRASSLAND, VERNAL POOLS.

Micro: ALKALINE SOILS IN GRASSLAND, OR IN VERNAL POOLS. MESIC, ALKALINE SITES. 15-700M.

Occurrence No. 14 **Map Index:** 47545 **EO Index:** 47955

Occ Rank: None
Origin: Natural/Native occurrence
Presence: Possibly Extirpated
Trend: Unknown

Dates Last Seen
Element: 1944-04-15
Site: 1944-04-15

Record Last Updated: 2002-05-20

Quad Summary: Redondo Beach (3311874/090C), Venice (3311884/090B)

County Summary: Los Angeles

Lat/Long: 33.88678º / -118.39645º
UTM: Zone-11 N3750480 E370865
Mapping Precision: NON-SPECIFIC
Symbol Type: POINT
Radius: 1 mile

Township: 03S
Range: 14W
Section: 30 **Qtr:** XX
Meridian: S
Elevation:

Location: NEAR JUNCTION OF SEPULVEDA BOULEVARD AND WEST RAILROAD, MANHATTAN BEACH.

Location Detail:

Ecological: ON MARGIN OF VERNAL POOL.

Threat:

General: NEEDS FIELDWORK. PROBABLY EXTIRPATED.

Owner/Manager: UNKNOWN

Nemacaulis denudata var. denudata

coast woolly-heads

Element Code: PDPGN0G011

Status	NDDB Element Ranks	Other Lists
Federal: None	**Global:** G3G4T3?	**CNPS List:** 1B.2
State: None	**State:** S2.2	

Habitat Associations

General: COASTAL DUNES.

Micro: 0-100M.

Occurrence No. 19 **Map Index:** 02237 **EO Index:** 1006

Occ Rank: Unknown
Origin: Natural/Native occurrence
Presence: Presumed Extant
Trend: Unknown

Dates Last Seen
Element: 1925-08-15
Site: 1925-08-15

Record Last Updated: 1998-10-14

Quad Summary: Los Alamitos (3311871/089D), Seal Beach (3311861/072A)

County Summary: Orange, Los Angeles

Lat/Long: 33.74423º / -118.10420º
UTM: Zone-11 N3734344 E397722
Mapping Precision: NON-SPECIFIC
Symbol Type: POINT
Radius: 3/5 mile

Township: 05S
Range: 12W
Section: 14 **Qtr:** XX
Meridian: S
Elevation: 20 ft

Location: ANAHEIM LANDING, SEAL BEACH.

Location Detail: ANAHEIM LANDING FORMERLY LOCATED NEAR JUNCTION OF BAY BLVD AND LANDING AVE IN PRESENT SEAL BEACH. EXACT LOCATION OF COLLECTION NOT KNOWN: SITE MAPPED TO INCLUDE SEAL BEACH AND HISTORIC ANAHEIM LANDING.

Ecological:

Threat:

General: VICINITY REPORTED IN 1901 COLLECTION BY ABRAMS AND IN 1925 COLLECTION BY M.E. JONES (SN DS).

Owner/Manager: UNKNOWN

Nemacaulis denudata var. denudata

coast woolly-heads

Element Code: PDPGN0G011

Status	NDDB Element Ranks	Other Lists
Federal: None	**Global:** G3G4T3?	**CNPS List:** 1B.2
State: None	**State:** S2.2	

Habitat Associations

General: COASTAL DUNES.

Micro: 0-100M.

Occurrence No. 20 **Map Index:** 47209 **EO Index:** 1004

Occ Rank: Fair
Origin: Natural/Native occurrence
Presence: Presumed Extant
Trend: Unknown

Dates Last Seen
Element: 2001-04-04
Site: 2001-04-04
Record Last Updated: 2004-01-08

Quad Summary: Seal Beach (3311861/072A)
County Summary: Orange

Lat/Long: 33.69613º / -118.04728º
UTM: Zone-11 N3728956 E402939
Mapping Precision: SPECIFIC
Symbol Type: POINT
Radius: 80 meters

Township: 05S
Range: 11W
Section: 32 **Qtr:** S
Meridian: S
Elevation: 10 ft

Location: BOLSA BAY/BOLSA CHICA BEACH AREA, ALONGSIDE PACIFIC COAST HIGHWAY, AT EDGE OF BOLSA CHICA ECOLOGICAL RESERVE BOUNDARY.

Location Detail: MAPPED AT THE BOLSA CHICA WETLANDS, BOLSA BAY, ABOUT 2 MILES NORTHWEST OF HUNTINGTON BEACH.

Ecological: SMALL COASTAL SAND DUNE SYSTEM. ASSOCIATED WITH AMBROSIA, CAKILE MARITIMA, CAMISSONIA CHEIRANTHIFOLIA, HETEROTHECA GRANDIFLORA, AND ISOCOMA MENZIESII.

Threat:

General: SITE CONFIRMED IN 1972; MAY BE THE ONLY PROTECTED POPULATION IN ORANGE COUNTY. PLANTS LOCALLY IN COMMON IN 2001 ACCORDING TO SOZA; BASAL ROSETTES WITH LAST YEAR'S INFLORESCENCES INTACT.

Owner/Manager: UNKNOWN

Nemacaulis denudata var. denudata

coast woolly-heads

Element Code: PDPGN0G011

Status

Federal: None
State: None

NDDB Element Ranks

Global: G3G4T3?
State: S2.2

Other Lists

CNPS List: 1B.2

Habitat Associations

General: COASTAL DUNES.
Micro: 0-100M.

Occurrence No. 22 **Map Index:** 27997 **EO Index:** 22231

Occ Rank: Unknown
Origin: Natural/Native occurrence
Presence: Presumed Extant
Trend: Unknown

Dates Last Seen

Element: XXXX-XX-XX
Site: XXXX-XX-XX

Record Last Updated: 1996-07-08

Quad Summary: Long Beach (3311872/089C)
County Summary: Los Angeles

Lat/Long: 33.77120º / -118.18868º
UTM: Zone-11 N3737422 E389931
Mapping Precision: NON-SPECIFIC
Symbol Type: POINT
Radius: 1 mile

Township: 05S
Range: 13W
Section: 01 **Qtr:** XX
Meridian: S
Elevation: 20 ft

Location: LONG BEACH.
Location Detail:
Ecological:
Threat:
General: ONLY SOURCE OF INFORMATION FOR THIS SITE IS UNDATED COLLECTION BY PARISH NOTED IN "FLORA OF CALIFRONIA, VOL. I" BY JEPSON (1909).
Owner/Manager: UNKNOWN

Nyctinomops femorosaccus

pocketed free-tailed bat

Element Code: AMACD04010

Status	NDDB Element Ranks	Other Lists
Federal: None	**Global:** G4	**CDFG Status:** SC
State: None	**State:** S2S3	

Habitat Associations

General: VARIETY OF ARID AREAS IN SOUTHERN CALIFORNIA; PINE-JUNIPER WOODLANDS, DESERT SCRUB, PALM OASIS, DESERT WASH, DESERT RIPA

Micro: ROCKY AREAS WITH HIGH CLIFFS.

Occurrence No. 15 **Map Index:** 68461 **EO Index:** 68716

Occ Rank: Unknown
Origin: Natural/Native occurrence
Presence: Presumed Extant
Trend: Unknown

Dates Last Seen
Element: 1985-10-18
Site: 1985-10-18

Record Last Updated: 2007-03-14

Quad Summary: Torrance (3311873/090D)

County Summary: Los Angeles

Lat/Long: 33.79001º / -118.29745º
UTM: Zone-11 N3739630 E379884
Mapping Precision: NON-SPECIFIC
Symbol Type: POINT
Radius: 4/5 mile

Township: 04S
Range: 14W
Section: 36 **Qtr:** XX
Meridian: S
Elevation: 50 ft

Location: HARBOR CITY.

Location Detail: LOCATION GIVEN ONLY AS 'HARBOR". MAPPED ACCORDING TO LAT/LONG COORDINATES PROVIDED BY MANIS WITH UNCERTAINTY OF 0.75 MI.

Ecological:

Threat:

General: 1 FEMALE SPECIMEN (MVZ #181960) COLLECTED AT "HARBOR" BY DENNY G. CONSTANTINE ON 18 OCT 1985.

Owner/Manager: UNKNOWN

Nyctinomops femorosaccus

pocketed free-tailed bat

Element Code: AMACD04010

Status	NDDB Element Ranks	Other Lists
Federal: None	**Global:** G4	**CDFG Status:** SC
State: None	**State:** S2S3	

Habitat Associations

General: VARIETY OF ARID AREAS IN SOUTHERN CALIFORNIA; PINE-JUNIPER WOODLANDS, DESERT SCRUB, PALM OASIS, DESERT WASH, DESERT RIPA

Micro: ROCKY AREAS WITH HIGH CLIFFS.

Occurrence No. 16 **Map Index:** 28742 **EO Index:** 68717

Occ Rank: Unknown
Origin: Natural/Native occurrence
Presence: Presumed Extant
Trend: Unknown

Dates Last Seen
Element: 1994-10-18
Site: 1994-10-18

Record Last Updated: 2007-03-14

Quad Summary: Inglewood (3311883/090A)
County Summary: Los Angeles

Lat/Long: 33.95930º / -118.35104º
UTM: Zone-11 N3758465 E375170
Mapping Precision: NON-SPECIFIC
Symbol Type: POINT
Radius: 1 mile

Township: 02S
Range: 14W
Section: XX **Qtr:** XX
Meridian: S
Elevation: 100 ft

Location: INGLEWOOD.
Location Detail:
Ecological:
Threat:
General: 1 MALE SPECIMEN (LACM #94036) COLLECTED AT "INGLEWOOD" BY DENNY G. CONSTANTINE ON 18 OCT 1994.
Owner/Manager: UNKNOWN

Nyctinomops macrotis

big free-tailed bat

Element Code: AMACD04020

Status	NDDB Element Ranks	Other Lists
Federal: None	**Global:** G5	**CDFG Status:** SC
State: None	**State:** S2	

Habitat Associations

General: LOW-LYING ARID AREAS IN SOUTHERN CALIFORNIA.

Micro: NEED HIGH CLIFFS OR ROCKY OUTCROPS FOR ROOSTING SITES. FEEDS PRINCIPALLY ON LARGE MOTHS.

Occurrence No. 5 **Map Index:** 27997 **EO Index:** 59564

Occ Rank: Unknown
Origin: Natural/Native occurrence
Presence: Presumed Extant
Trend: Unknown

Dates Last Seen
Element: 1983-10-07
Site: 1983-10-07

Record Last Updated: 2005-01-21

Quad Summary: Long Beach (3311872/089C)

County Summary: Los Angeles

Lat/Long: 33.77120º / -118.18868º
UTM: Zone-11 N3737422 E389931
Mapping Precision: NON-SPECIFIC
Symbol Type: POINT
Radius: 1 mile

Township: 05S
Range: 13W
Section: 01 **Qtr:** XX
Meridian: S
Elevation: 20 ft

Location: LONG BEACH.

Location Detail: EXACT LOCATION NOT KNOWN; MAPPED IN GENERAL AREA OF LONG BEACH. LOCATION ONLY GIVEN AS "LONG BEACH." COORDINATES PROVIDED BY MANIS FALL ON NORTHEAST SIDE OF CIRCLE WITH AN UNCERTAINTY OF 3218 METERS (~2 MILES).

Ecological:

Threat:

General: ONE FEMALE SPECIMEN COLLECTED 7 OCT 1983 BY D. CONSTANTINE AT "LONG BEACH." DEPOSITED AT MVZ #181983.

Owner/Manager: UNKNOWN

Orcuttia californica

California Orcutt grass

Element Code: PMPOA4G010

Status	NDDB Element Ranks	Other Lists
Federal: Endangered	**Global:** G2	**CNPS List:** 1B.1
State: Endangered	**State:** S2.1	

Habitat Associations

General: VERNAL POOLS.

Micro: 15-660M.

Occurrence No. 12 **Map Index:** 01899 **EO Index:** 22413

Occ Rank: None
Origin: Natural/Native occurrence
Presence: Extirpated
Trend: Unknown

Dates Last Seen
Element: 1946-06-11
Site: 1976-XX-XX

Record Last Updated: 2008-04-08

Quad Summary: Inglewood (3311883/090A)

County Summary: Los Angeles

Lat/Long: 33.90278º / -118.31035º
UTM: Zone-11 N3752149 E378850
Mapping Precision: NON-SPECIFIC
Symbol Type: POINT
Radius: 1 mile

Township: 03S
Range: 14W
Section: 14 **Qtr:** SE
Meridian: S
Elevation: 50 ft

Location: DRY DITCHES AROUND OLD MUNICIPAL AIRPORT, JUNCTION OF WESTERN AVE & ROSECRANS AVE, LOS ANGELES.

Location Detail:

Ecological: IN DRY DITCHES SIMULATING VERNAL POOLS. ASSOCIATED WITH CRYPSIS ACULEATA.

Threat:

General: LAST SEEN IN 1946. NO PLANTS SEEN IN 1976; POPULATION EXTIRPATED PER GRIGGS.

Owner/Manager: UNKNOWN

Orcuttia californica

California Orcutt grass

Element Code: PMPOA4G010

Status	NDDB Element Ranks	Other Lists
Federal: Endangered	**Global:** G2	**CNPS List:** 1B.1
State: Endangered	**State:** S2.1	

Habitat Associations

General: VERNAL POOLS.

Micro: 15-660M.

Occurrence No. 13 **Map Index:** 47232 **EO Index:** 47232

Occ Rank: None
Origin: Natural/Native occurrence
Presence: Extirpated
Trend: Unknown

Dates Last Seen
Element: XXXX-XX-XX
Site: XXXX-XX-XX

Record Last Updated: 2002-02-14

Quad Summary: Long Beach (3311872/089C), Los Alamitos (3311871/089D)

County Summary: Los Angeles

Lat/Long: 33.83581º / -118.11743º
UTM: Zone-11 N3744512 E396606
Mapping Precision: NON-SPECIFIC
Symbol Type: POINT
Radius: 1 mile

Township: 04S
Range: 12W
Section: 10 **Qtr:** XX
Meridian: S
Elevation: 40 ft

Location: WEST LOS ANGELES COUNTY, NEAR LAKEWOOD.

Location Detail:

Ecological:

Threat:

General: COLLECTED NEAR LAKEWOOD ACCORDING TO GRIGGS (1977), UNKNOWN WHEN SEEN. APPARENTLY EXTIRPATED.

Owner/Manager: UNKNOWN

Orcuttia californica

California Orcutt grass

Element Code: PMPOA4G010

Status	NDDB Element Ranks	Other Lists
Federal: Endangered	**Global:** G2	**CNPS List:** 1B.1
State: Endangered	**State:** S2.1	

Habitat Associations

General: VERNAL POOLS.

Micro: 15-660M.

Occurrence No. 14 **Map Index:** 26503 **EO Index:** 47231

Occ Rank: None
Origin: Natural/Native occurrence
Presence: Extirpated
Trend: Unknown

Dates Last Seen
Element: XXXX-XX-XX
Site: XXXX-XX-XX

Record Last Updated: 2002-02-14

Quad Summary: Whittier (3311881/089A), South Gate (3311882/089B)

County Summary: Los Angeles

Lat/Long: 33.94216º / -118.13586º
UTM: Zone-11 N3756324 E395032
Mapping Precision: NON-SPECIFIC
Symbol Type: POINT
Radius: 1 mile

Township: 03S
Range: 12W
Section: XX **Qtr:** XX
Meridian: S
Elevation: 120 ft

Location: WEST LOS ANGELES COUNTY, NEAR DOWNEY.

Location Detail:

Ecological:

Threat:

General: COLLECTED NEAR DOWNEY ACCORDING TO GRIGGS (1977), UNKNOWN WHEN SEEN. APPARENTLY EXTIRPATED.

Owner/Manager: UNKNOWN

Panoquina errans

wandering (=saltmarsh) skipper

Element Code: IILEP84030

Status	NDDB Element Ranks	Other Lists
Federal: None	**Global:** G4G5	**CDFG Status:**
State: None	**State:** S1	

Habitat Associations

General: SOUTHERN CALIFORNIA COASTAL SALT MARSHES.

Micro: REQUIRES MOIST SALTGRASS FOR LARVAL DEVELOPMENT.

Occurrence No. 6 **Map Index:** 20586 **EO Index:** 34788

Occ Rank: Unknown
Origin: Natural/Native occurrence
Presence: Presumed Extant
Trend: Unknown

Dates Last Seen
Element: 1989-09-XX
Site: 1989-09-XX
Record Last Updated: 1998-09-23

Quad Summary: Seal Beach (3311861/072A)
County Summary: Orange

Lat/Long: 33.70090º / -118.04679º
UTM: Zone-11 N3729485 E402991
Mapping Precision: SPECIFIC
Symbol Type: POLYGON
Area: 16.5 acres

Township: 05S
Range: 11W
Section: 29 **Qtr:** XX
Meridian: S
Elevation: 40 ft

Location: RABBIT ISLAND, IN BOLSA CHICA ECOLOGICAL RESERVE.

Location Detail: THE SKIPPER WAS PROBABLY ASSOCIATED WITH FLOWERING HAPLOPAPPUS, HELIOTROPIUM, AND DISTICHLIS SPICATA.

Ecological: MOSAIC OF PLANT COMMUNITIES & SAND. VEG INCLUDES BACCHARIS, ATRIPLEX, MONANTHOCHLOE LITTORALIS, ELYMUS TRITICOIDES, HAPLOPAPPUS SP, HETEROTHECA GRANDIFLORA, JUNCUS ACUTUS, LOTUS SCIPARIUS, CARPOBROTUS EDULIS, OENOTHERA, ABRONIA & ICE PLANT.

Threat:

General: THIS AREA IS RESTRICTED FROM PUBLIC ACCESS & IN RECENT YEARS HAS REMAINED RELATIVELY UNDISTURBED. THE SKIPPER WAS FOUND IN SMALL NUMBERS DURING AN AUGUST 1988 TO SEPT 1989 INSECT SURVEY.

Owner/Manager: DFG-BOLSA CHICA ER

Panoquina errans

wandering (=saltmarsh) skipper

Element Code: IILEP84030

Status	NDDB Element Ranks	Other Lists
Federal: None	**Global:** G4G5	**CDFG Status:**
State: None	**State:** S1	

Habitat Associations

General: SOUTHERN CALIFORNIA COASTAL SALT MARSHES.

Micro: REQUIRES MOIST SALTGRASS FOR LARVAL DEVELOPMENT.

Occurrence No. 7 **Map Index:** 36747 **EO Index:** 34898

Occ Rank: Unknown
Origin: Natural/Native occurrence
Presence: Presumed Extant
Trend: Unknown

Dates Last Seen
Element: 1989-07-XX
Site: 1989-07-XX
Record Last Updated: 1998-10-05

Quad Summary: Seal Beach (3311861/072A)

County Summary: Orange

Lat/Long: 33.70690º / -118.04528º
UTM: Zone-11 N3730149 E403138
Mapping Precision: SPECIFIC
Symbol Type: POLYGON
Area: 25.2 acres

Township: 05S
Range: 11W
Section: 28 **Qtr:** XX
Meridian: S
Elevation: 10 ft

Location: BOLSA CHICA ECOLOGICAL RESERVE. ABOUT 0.3 MI SOUTH OF INTERSECTION OF LOS PATOS AVE & BOLSA CHICA ST.

Location Detail: THE SKIPPER WAS ASSOCIATED WITH THE PICKLEWEED, SALT GRASS AND HELIOTROPE CURASSAVICUM COMMUNITY ON THE WESTERN EDGE OF THE EUCALYPTUS GROVE.

Ecological: EUCALYPTUS GROVE ALONG THE ENTRANCE ROAD OF THE OIL PROPERTY. SPARSE UNDERSTORY OF MYOPORUM, PRICKLY PEAR, BLADDER POD, COULTER SALTBUSH & TOBACCO TREE.

Threat:

General: UNKNOWN NUMBER OBSERVED & COLLECTED AUG - OCT 1988 & APR, JUN & JUL 1989.

Owner/Manager: DFG-BOLSA CHICA ER

Panoquina errans

wandering (=saltmarsh) skipper

Element Code: IILEP84030

Status	NDDB Element Ranks	Other Lists
Federal: None	**Global:** G4G5	**CDFG Status:**
State: None	**State:** S1	

Habitat Associations

General: SOUTHERN CALIFORNIA COASTAL SALT MARSHES.

Micro: REQUIRES MOIST SALTGRASS FOR LARVAL DEVELOPMENT.

Occurrence No. 8 **Map Index:** 40026 **EO Index:** 35028

Occ Rank: Unknown
Origin: Natural/Native occurrence
Presence: Presumed Extant
Trend: Unknown

Dates Last Seen
Element: 1989-08-XX
Site: 1989-08-XX
Record Last Updated: 1998-11-06

Quad Summary: Seal Beach (3311861/072A)
County Summary: Orange

Lat/Long: 33.68865º / -118.03879º
UTM: Zone-11 N3728119 E403719
Mapping Precision: SPECIFIC
Symbol Type: POLYGON
Area: 10.0 acres

Township: 06S
Range: 11W
Section: 04 **Qtr:** XX
Meridian: S
Elevation: 20 ft

Location: BOLSA CHICA ECOLOGICAL RESERVE, JUST WEST AND SOUTH OF SOUTH ISLAND.

Location Detail: ADULT SKIPPERS MOST OFTEN OBSERVED IN THE PROXIMITY OF LARGE CLUSTERS OF FLOWERING HELIOTROPIUM, ALSO FOUND ON HAPLOPAPPUS AND OCCASIONALLY ON FRANKENIA.

Ecological: EXTREMELY DENSE HOTTENTOT-FIG WHICH BECAME OVERGROWN BY A DENSE LAYER OF COASTAL SALTGRASS (LARVAL FOOD PLANT) AS THE SEASON PROGRESSED FROM SPRING THROUGH SUMMER. SEVERAL SINK HOLES WITH WATER OF VARYING SALINITY.

Threat:

General: FOUND IN APRIL 1988 & AUGUST 1989. HIGHEST DENSITIES WERE IN AUGUST.

Owner/Manager: DFG-BOLSA CHICA ER

Passerculus sandwichensis beldingi

Belding's savannah sparrow

Element Code: ABPBX99015

Status	NDDB Element Ranks	Other Lists
Federal: None	**Global:** G5T3	**CDFG Status:**
State: Endangered	**State:** S3	

Habitat Associations

General: INHABITS COASTAL SALT MARSHES, FROM SANTA BARBARA SOUTH THROUGH SAN DIEGO COUNTY.

Micro: NESTS IN SALICORNIA ON AND ABOUT MARGINS OF TIDAL FLATS.

Occurrence No. 8 **Map Index:** 02224 **EO Index:** 24653

Occ Rank: Unknown
Origin: Natural/Native occurrence
Presence: Presumed Extant
Trend: Increasing

Dates Last Seen
Element: 2001-04-10
Site: 2001-04-10

Record Last Updated: 2002-09-24

Quad Summary: Los Alamitos (3311871/089D)

County Summary: Los Angeles

Lat/Long: 33.76478º / -118.10811º
UTM: Zone-11 N3736627 E397384
Mapping Precision: NON-SPECIFIC
Symbol Type: POINT
Radius: 1/5 mile

Township: 05S
Range: 12W
Section: 11 **Qtr:** XX
Meridian: S
Elevation: 5 ft

Location: LOS CERRITOS MARSH, SOUTH OF CERRITOS CHANNEL & WEST OF STUDEBAKER ROAD.

Location Detail: BELDINGS CLUSTERED IN THE HIGHER ELEVATION AREA IN THE CENTER OF THE TIDALLY INFLUENCED AREA.

Ecological: REMNANT OF ONCE EXTENSIVE ALAMITOS BAY MARSHES. TIDAL INFLUENCE IN 25-30 ACRES. RESTORATION OF ~70 ACRES IS PLANNED (1991) IN CONJUNCTION WITH PROPOSED HOUSING DEVELOPMENT. RESTORATION & MANAGEMENT RESULTED IN HIGH COUNT OF BIRS IN 2001.

Threat: TRASH DUMPING & PET USE COMMON. RED FOX OBSERVED IN 1991. OIL RECOVERY OPERATIONS ADJACENT TO SITE

General: NOT SURVEYED IN 1973, 5 PRS ESTIMATED IN 1977, 2 PRS ESTIMATED IN 1986, 9 PRS ESTIMATED IN 1991. 4 PRS EST IN 1996. 19 PRS EST IN 2001.

Owner/Manager: UNKNOWN

Passerculus sandwichensis beldingi

Belding's savannah sparrow

Element Code: ABPBX99015

Status	NDDB Element Ranks	Other Lists
Federal: None	**Global:** G5T3	**CDFG Status:**
State: Endangered	**State:** S3	

Habitat Associations

General: INHABITS COASTAL SALT MARSHES, FROM SANTA BARBARA SOUTH THROUGH SAN DIEGO COUNTY.

Micro: NESTS IN SALICORNIA ON AND ABOUT MARGINS OF TIDAL FLATS.

Occurrence No. 9 **Map Index:** 15949 **EO Index:** 14648

Occ Rank: Good
Origin: Natural/Native occurrence
Presence: Presumed Extant
Trend: Fluctuating

Dates Last Seen
Element: 2001-03-26
Site: 2001-03-26
Record Last Updated: 2002-09-26

Quad Summary: Seal Beach (3311861/072A)
County Summary: Orange

Lat/Long: 33.73977º / -118.07696º
UTM: Zone-11 N3733823 E400240
Mapping Precision: SPECIFIC
Symbol Type: POLYGON
Area: 800.0 acres

Township: 05S
Range: 12W
Section: 13 **Qtr:** XX
Meridian: S
Elevation:

Location: ANAHEIM BAY MARSH. SEAL BEACH NATIONAL WILDLIFE REFUGE.

Location Detail: BIRDS CONCENTRATED BETWEEN BOLSA AVE & RR TRACKS, EAST OF CASE RD (SEAL BEACH NWR) & IN THE 1980 RESTORATION AREA ALONG THE CHANNELS. THIS DISTRIBUTION PATTERN HAS REMAINED FAIRLY CONSTANT OVER THE YEARS.

Ecological: HABITAT RESTORATION IN SE PART OF MARSH IN 1980. ONE OF THE FEW EXTENSIVE, GOOD HABITATS IN CA. 229 HA SALTMARSH. FULL TIDAL ACTION. UPPER MARSH IS SCARCE ON THE REFUGE & COULD BE RESTORED IN MANY AREAS WHICH WOULD ACCOMMODATE MORE BELDINGS

Threat:

General: 293 PRS ESTIMATED IN 2001. 234 PRS ESTIMATED IN 1996. 138 PRS ESTIMATED IN 1991. 244 PRS ESTIMATED IN 1986. 267 PRS ESTIMATED IN 1977. 125 PRS ESTIMATED IN 1973.

Owner/Manager: USFWS-SEAL BEACH NWS, DOD

Passerculus sandwichensis beldingi

Belding's savannah sparrow

Element Code: ABPBX99015

Status	NDDB Element Ranks	Other Lists
Federal: None	**Global:** G5T3	**CDFG Status:**
State: Endangered	**State:** S3	

Habitat Associations

General: INHABITS COASTAL SALT MARSHES, FROM SANTA BARBARA SOUTH THROUGH SAN DIEGO COUNTY.

Micro: NESTS IN SALICORNIA ON AND ABOUT MARGINS OF TIDAL FLATS.

Occurrence No. 10 **Map Index:** 15986 **EO Index:** 24652

Occ Rank: Poor
Origin: Natural/Native occurrence
Presence: Presumed Extant
Trend: Unknown

Dates Last Seen
Element: 2001-03-26
Site: 2001-03-26
Record Last Updated: 2002-09-26

Quad Summary: Seal Beach (3311861/072A)
County Summary: Orange

Lat/Long: 33.72858º / -118.07652º
UTM: Zone-11 N3732582 E400268
Mapping Precision: NON-SPECIFIC
Symbol Type: POLYGON
Area:

Township: 05S
Range: 11W
Section: 19 **Qtr:** S
Meridian: S
Elevation: 10 ft

Location: HUNTINGTON HARBOR SUNSET AQUATIC PARK.
Location Detail:
Ecological: HABITAT THAT EXISTED IN HARBOR & ALONG EDGE OF SUNSET AQUATIC PARK HAS BEEN DESTROYED. ISOLATED PATCH OF PICKLEWEED ADJACENT TO SEAL BEACH NWR. SITE IS DEPENDENT UPON ADJACENT REFUGE FOR CONSISTENT PRESENCE OF SAVANNAH SPARROWS.
Threat: MUCH TRASH DUMPING.
General: NOT SURVEYED IN 1973, 6 PAIRS ESTIMATED IN 1977, 0 PAIRS OBSERVED IN 1986, 1991, & 1996, 2 PAIRS OBS IN 2001.
Owner/Manager: ORANGE COUNTY

Passerculus sandwichensis beldingi

Belding's savannah sparrow

Element Code: ABPBX99015

Status	NDDB Element Ranks	Other Lists
Federal: None	**Global:** G5T3	**CDFG Status:**
State: Endangered	**State:** S3	

Habitat Associations

General: INHABITS COASTAL SALT MARSHES, FROM SANTA BARBARA SOUTH THROUGH SAN DIEGO COUNTY.

Micro: NESTS IN SALICORNIA ON AND ABOUT MARGINS OF TIDAL FLATS.

Occurrence No. 12 **Map Index:** 02332 **EO Index:** 1009

Occ Rank: Good
Origin: Natural/Native occurrence
Presence: Presumed Extant
Trend: Fluctuating

Dates Last Seen
Element: 2001-04-03
Site: 2001-04-03

Record Last Updated: 2002-09-26

Quad Summary: Seal Beach (3311861/072A)

County Summary: Orange

Lat/Long: 33.69803º / -118.04191º
UTM: Zone-11 N3729162 E403440
Mapping Precision: SPECIFIC
Symbol Type: POLYGON
Area: 1,121.5 acres

Township: 05S
Range: 11W
Section: XX **Qtr:** XX
Meridian: S
Elevation: 0 ft

Location: BOLSA CHICA WETLANDS, BOLSA BAY.

Location Detail: 1991: MOST BIRDS OBS IN AREA RECEIVING MUTED TIDAL INFLUENCE ADJACENT TO PACIFIC COAST HWY, MOST OTHER PICKLEWEED IS DEGRADED. 1986: 81% OF PAIRS IN NON-TIDAL PART OF MARSH NEAR RABBIT ISLAND.

Ecological: 230 HECTARES OF MARSH W/PARTIAL TIDAL ACTION. TIDAL FLOW RESTORED TO INNER BAY, EXTREMELY HIGH RESTORATION POTENTIAL FOR REST OF MARSH.

Threat: OIL RECOVERY OPERATIONS, ILLEGAL DUMPING, HUMAN TRESPASS, ILLEGAL DOGS AND BIKES ON PUBLIC LOOP TRAIL, DEVELOPMENT.

General: 40 PRS ESTIMATED IN 1973, 186 PRS ESTIMATED IN 1977, 163 PRS ESTIMATED IN 1986, 110 PRS ESTIMATED IN 1991. 193 PRS ESTIMATED IN 1996. 154 PRS ESTIMATED IN 2001.

Owner/Manager: DPR-BOLSA CHICA SB

Pelecanus occidentalis californicus

California brown pelican

Element Code: ABNFC01021

Status		NDDB Element Ranks		Other Lists	
Federal:	Endangered	**Global:**	G4T3	**CDFG Status:**	
State:	Endangered	**State:**	S1S2		

Habitat Associations

General: COLONIAL NESTER ON COASTAL ISLANDS JUST OUTSIDE THE SURF LINE.

Micro: NESTS ON COASTAL ISLANDS OF SMALL TO MODERATE SIZE WHICH AFFORD IMMUNITY FROM ATTACK BY GROUND-DWELLING PREDATORS. ROOST

Occurrence No. 14 **Map Index:** 63544 **EO Index:** 63649

Occ Rank: Excellent
Origin: Natural/Native occurrence
Presence: Presumed Extant
Trend: Unknown

Dates Last Seen
Element: 2000-XX-XX
Site: 2000-XX-XX
Record Last Updated: 2005-12-29

Quad Summary: Long Beach (3311872/089C)
County Summary:

Lat/Long:	33.72344º / -118.19059º	**Township:**	99X		
UTM:	Zone-11 N3732128 E389693	**Range:**	99X		
Mapping Precision:	SPECIFIC	**Section:**	UN	**Qtr:**	XX
Symbol Type:	POLYGON	**Meridian:**	X		
Area:	397.7 acres	**Elevation:**	0 ft		

Location: EASTERN AND MIDDLE LONG BEACH HARBOR BREAKWATERS.

Location Detail: ROOST NUMBER LA 1.0 (EAST BREAKWATER) AND LA 2.0 (MIDDLE BREAKWATER)

Ecological: COMBINED BREAKWATERS ARE 9.4 KM IN LENGTH. THEY ARE BROAD & SOMEWHAT PROTECTED FROM WINTER SURF.

Threat: POTENTIAL THREAT FROM RECREATIONAL ANGLERS & BOATERS. DISTANCE TO SHORE & HEAVY SHIPPING TRAFFIC LIMIT RECREATIONAL USE.

General: DAY & NIGHT ROOST. THIS IS LARGEST & HIGHEST QUALITY ROOST ON SOUTHERN CALIFORNIA COAST. 584 BIRDS COUNTED AT DAWN 5 NOV 1986. SUMMARY OF 1986-87, 1992-93 & 1998-2000 DIURNAL COUNTS: 31-650 BIRDS (MIDDLE) & 53-690 BIRDS (EAST) BREAKWATERS.

Owner/Manager: LONG BEACH HARBOR, DOD-COE

Pentachaeta lyonii

Lyon's pentachaeta

Element Code: PDAST6X060

Status	NDDB Element Ranks	Other Lists
Federal: Endangered	**Global:** G2	**CNPS List:** 1B.1
State: Endangered	**State:** S2	

Habitat Associations

General: CHAPARRAL, VALLEY AND FOOTHILL GRASSLAND.

Micro: EDGES OF CLEARINGS IN CHAP., USUALLY AT THE ECOTONE BTWN GRASSLAND AND CHAPARRAL OR EDGES OF FIREBREAKS. 30-630M.

Occurrence No. 2 **Map Index:** 34591 **EO Index:** 48785

Occ Rank: None
Origin: Natural/Native occurrence
Presence: Possibly Extirpated
Trend: Decreasing

Dates Last Seen
Element: 1886-XX-XX
Site: 1994-XX-XX

Record Last Updated: 2008-10-03

Quad Summary: San Pedro (3311863/073A), Torrance (3311873/090D)

County Summary: Los Angeles

Lat/Long: 33.74588º / -118.33602º
UTM: Zone-11 N3734781 E376250
Mapping Precision: NON-SPECIFIC
Symbol Type: POINT
Radius: 1 mile

Township: 01S
Range: 14W
Section: XX **Qtr:** XX
Meridian: S
Elevation: 1,400 ft

Location: PALOS VERDES MT (=SAN PEDRO HILLS).

Location Detail: EXACT LOCATION UNKNOWN. MAPPED AT SAN PEDRO HILL AND SURROUNDINGS BY CNDDB.

Ecological:

Threat: AREA HAS BEEN OVER-RUN BY ANNUAL GRASSES AND THISTLES. THE MAJORITY OF THIS AREA IS URBANIZED.

General: TYPE LOCALITY. ONLY SOURCE OF INFORMATION FOR THIS SITE IS A 1886 LYON COLLECTION. THOMAS MENTIONS THAT HE SAW NO PLANTS IN THIS AREA IN 1989 OR 1994. NEEDS FIELDWORK.

Owner/Manager: UNKNOWN

Pentachaeta lyonii

Lyon's pentachaeta

Element Code: PDAST6X060

Status	NDDB Element Ranks	Other Lists
Federal: Endangered	**Global:** G2	**CNPS List:** 1B.1
State: Endangered	**State:** S2	

Habitat Associations

General: CHAPARRAL, VALLEY AND FOOTHILL GRASSLAND.

Micro: EDGES OF CLEARINGS IN CHAP., USUALLY AT THE ECOTONE BTWN GRASSLAND AND CHAPARRAL OR EDGES OF FIREBREAKS. 30-630M.

Occurrence No. 7 **Map Index:** 39864 **EO Index:** 48741

Occ Rank: None
Origin: Natural/Native occurrence
Presence: Possibly Extirpated
Trend: Unknown

Dates Last Seen
Element: XXXX-XX-XX
Site: XXXX-XX-XX

Record Last Updated: 2002-09-06

Quad Summary: Torrance (3311873/090D), Long Beach (3311872/089C)

County Summary: Los Angeles

Lat/Long: 33.79001º / -118.24785º
UTM: Zone-11 N3739572 E384477
Mapping Precision: NON-SPECIFIC
Symbol Type: POINT
Radius: 1 mile

Township: 04S
Range: 13W
Section: 33 **Qtr:** XX
Meridian: S
Elevation: 30 ft

Location: WILMINGTON.
Location Detail:
Ecological:
Threat:
General: LOCATION BASED UPON OLD (UNDATED) BRANDEGEE COLLECTION. POPULATION PRESUMABLY EXTIRPATED ACCORDING TO FOTHERINGHAM. HISTORIC SITE. NEEDS FIELDWORK.
Owner/Manager: UNKNOWN

Perognathus longimembris pacificus

Pacific pocket mouse

Element Code: AMAFD01042

Status

Federal: Endangered
State: None

NDDB Element Ranks

Global: G5T1
State: S1

Other Lists

CDFG Status: SC

Habitat Associations

General: INHABITS THE NARROW COASTAL PLAINS FROM THE MEXICAN BORDER NORTH TO EL SEGUNDO, LOS ANGELES CO.

Micro: SEEMS TO PREFER SOILS OF FINE ALLUVIAL SANDS NEAR THE OCEAN, BUT MUCH REMAINS TO BE LEARNED.

Occurrence No. 1 **Map Index:** 39854 **EO Index:** 34856

Occ Rank: None
Origin: Natural/Native occurrence
Presence: Extirpated
Trend: Unknown

Dates Last Seen

Element: 1931-09-05
Site: 1931-09-05

Record Last Updated: 2003-04-10

Quad Summary: Torrance (3311873/090D), Redondo Beach (3311874/090C)

County Summary: Los Angeles

Lat/Long: 33.82667º / -118.38139º
UTM: Zone-11 N3743796 E372168
Mapping Precision: NON-SPECIFIC
Symbol Type: POINT
Radius: 3/5 mile

Township: 04S
Range: 14W
Section: 17 **Qtr:** XX
Meridian: S
Elevation: 100 ft

Location: CLIFTON, EAST OF REDONDO STATE BEACH.
Location Detail:
Ecological:
Threat:
General: HISTORIC SITE. 3 SBMNH SPECIMENS AND 1 MVZ SPECIMEN (MALE, #47325), ALL COLLECTED IN SEP 1931.
Owner/Manager: UNKNOWN

Perognathus longimembris pacificus

Pacific pocket mouse

Element Code: AMAFD01042

Status

Federal: Endangered
State: None

NDDB Element Ranks

Global: G5T1
State: S1

Other Lists

CDFG Status: SC

Habitat Associations

General: INHABITS THE NARROW COASTAL PLAINS FROM THE MEXICAN BORDER NORTH TO EL SEGUNDO, LOS ANGELES CO.

Micro: SEEMS TO PREFER SOILS OF FINE ALLUVIAL SANDS NEAR THE OCEAN, BUT MUCH REMAINS TO BE LEARNED.

Occurrence No. 3 **Map Index:** 39864 **EO Index:** 34866

Occ Rank: None
Origin: Natural/Native occurrence
Presence: Extirpated
Trend: Unknown

Dates Last Seen

Element: 1865-10-XX
Site: 1865-10-XX

Record Last Updated: 2003-04-10

Quad Summary: Torrance (3311873/090D), Long Beach (3311872/089C)

County Summary: Los Angeles

Lat/Long: 33.79001º / -118.24785º
UTM: Zone-11 N3739572 E384477
Mapping Precision: NON-SPECIFIC
Symbol Type: POINT
Radius: 1 mile

Township: 04S
Range: 13W
Section: 33 **Qtr:** XX
Meridian: S
Elevation: 30 ft

Location: WILMINGTON, LOS ANGELES.
Location Detail:
Ecological:
Threat:
General: HISTORIC SITE. 3 MVZ SPECIMENS (#5633-35) COLLECTED IN OCT 1865 BY J. G. COOPER.
Owner/Manager: UNKNOWN

Phacelia stellaris

Brand's star phacelia

Element Code: PDHYD0C510

Status	NDDB Element Ranks	Other Lists
Federal: Candidate	**Global:** G1G2	**CNPS List:** 1B.1
State: None	**State:** S1.1	

Habitat Associations

General: COASTAL SCRUB, COASTAL DUNES.

Micro: OPEN AREAS. 5-1515M.

Occurrence No. 3 **Map Index:** 26503 **EO Index:** 1726

Occ Rank: None
Origin: Natural/Native occurrence
Presence: Possibly Extirpated
Trend: Unknown

Dates Last Seen
Element: XXXX-XX-XX
Site: XXXX-XX-XX

Record Last Updated: 1995-10-04

Quad Summary: Whittier (3311881/089A), South Gate (3311882/089B)

County Summary: Los Angeles

Lat/Long: 33.94216º / -118.13586º
UTM: Zone-11 N3756324 E395032
Mapping Precision: NON-SPECIFIC
Symbol Type: POINT
Radius: 1 mile

Township: 03S
Range: 12W
Section: XX **Qtr:** XX
Meridian: S
Elevation: 120 ft

Location: DOWNEY.
Location Detail:
Ecological:
Threat:
General: OCCURRENCE KNOWN FROM MENTION OF SITE NAME IN MUNZ (1959). C. REISER SUGGESTS POPULATION IS NO LONGER EXTANT (1994).
Owner/Manager: UNKNOWN

Phacelia stellaris

Brand's star phacelia

Element Code: PDHYD0C510

Status	NDDB Element Ranks	Other Lists
Federal: Candidate	**Global:** G1G2	**CNPS List:** 1B.1
State: None	**State:** S1.1	

Habitat Associations

General: COASTAL SCRUB, COASTAL DUNES.

Micro: OPEN AREAS. 5-1515M.

Occurrence No. 4 **Map Index:** 01700 **EO Index:** 757

Occ Rank: Unknown
Origin: Natural/Native occurrence
Presence: Presumed Extant
Trend: Unknown

Dates Last Seen
Element: 1909-06-04
Site: 1909-06-04
Record Last Updated: 1995-11-20

Quad Summary: Torrance (3311873/090D), Redondo Beach (3311874/090C)

County Summary: Los Angeles

Lat/Long: 33.82921º / -118.39056º
UTM: Zone-11 N3744088 E371323
Mapping Precision: NON-SPECIFIC
Symbol Type: POINT
Radius: 1 mile

Township: 04S
Range: 14W
Section: XX **Qtr:** XX
Meridian: S
Elevation: 50 ft

Location: REDONDO, LOS ANGELES COAST.

Location Detail: MAPPED IN VICINITY OF REDONDO BEACH.

Ecological:

Threat:

General: SITE KNOWN FROM TWO COLLECTIONS: GEIS IN 1909 AND PARISH #1347 (DU) IN 1897. GEIS COLLECTION ORIGINAL LABEL P. DOUGLASSI VAR ? ANNOTATED TO P. STELLARIS BY HOWELL IN 1942. PARISH COLLECTION ORIGINAL LABEL P. DOUGLASII; NOT FURTHER ANNT.

Owner/Manager: UNKNOWN

Phrynosoma coronatum (blainvillii population)

coast (San Diego) horned lizard

Element Code: ARACF12021

Status	NDDB Element Ranks	Other Lists
Federal: None	**Global:** G4G5	**CDFG Status:** SC
State: None	**State:** S3S4	

Habitat Associations

General: INHABITS COASTAL SAGE SCRUB AND CHAPARRAL IN ARID AND SEMI-ARID CLIMATE CONDIT

Micro: PREFERS FRIABLE, ROCKY, OR SHALLOW SANDY SOILS.

Occurrence No. 123 **Map Index:** 02256 **EO Index:** 28084

Occ Rank: None
Origin: Natural/Native occurrence
Presence: Possibly Extirpated
Trend: Unknown

Dates Last Seen
Element: 1951-XX-XX
Site: 1951-XX-XX

Record Last Updated: 2006-01-23

Quad Summary: Los Alamitos (3311871/089D)

County Summary: Orange, Los Angeles

Lat/Long: 33.80408º / -118.08731º
UTM: Zone-11 N3740964 E399356
Mapping Precision: NON-SPECIFIC
Symbol Type: POINT
Radius: 2/5 mile

Township: 04S
Range: 12W
Section: 25 **Qtr:** SE
Meridian: S
Elevation: 20 ft

Location: LONG BEACH, WILLOW STREET BRIDGE OVER SAN GABRIEL RIVER IN CITY PARK.

Location Detail: MAPPED TO INCLUDE THE BRIDGE OVER THE SAN GABRIEL RIVER AND THE BRIDGE OVER ITS TRIBUTARY, COYOTE CREEK.

Ecological:

Threat:

General: LACM SPECIMEN #101352. COLLECTED IN 1951 BY M. WOODS.

Owner/Manager: CITY OF LONG BEACH

Phrynosoma coronatum (blainvillii population)

coast (San Diego) horned lizard

Element Code: ARACF12021

Status	NDDB Element Ranks	Other Lists
Federal: None	**Global:** G4G5	**CDFG Status:** SC
State: None	**State:** S3S4	

Habitat Associations

General: INHABITS COASTAL SAGE SCRUB AND CHAPARRAL IN ARID AND SEMI-ARID CLIMATE CONDIT

Micro: PREFERS FRIABLE, ROCKY, OR SHALLOW SANDY SOILS.

Occurrence No. 130 **Map Index:** 01965 **EO Index:** 28078

Occ Rank: None
Origin: Natural/Native occurrence
Presence: Possibly Extirpated
Trend: Unknown

Dates Last Seen
Element: 1952-04-15
Site: 1952-04-15

Record Last Updated: 2006-01-23

Quad Summary: South Gate (3311882/089B)

County Summary: Los Angeles

Lat/Long: 33.90327º / -118.22273º
UTM: Zone-11 N3752103 E386952
Mapping Precision: NON-SPECIFIC
Symbol Type: POINT
Radius: 1 mile

Township: 03S
Range: 13W
Section: XX **Qtr:** XX
Meridian: S
Elevation: 70 ft

Location: CITY OF COMPTON

Location Detail: 1 RECORD FROM JUNCTION OF ROSECRANS AVE & SANTA FE AVE & 1 RECORD GIVEN ONLY AS "COMPTON"

Ecological:

Threat:

General: LACM SPECIMENS #101356 COLLECTED 15 APR 1952 & #101357 COLLECTED 15 MAR 1952.

Owner/Manager: UNKNOWN

Phrynosoma coronatum (blainvillii population)

coast (San Diego) horned lizard

Element Code: ARACF12021

Status	NDDB Element Ranks	Other Lists
Federal: None	**Global:** G4G5	**CDFG Status:** SC
State: None	**State:** S3S4	

Habitat Associations

General: INHABITS COASTAL SAGE SCRUB AND CHAPARRAL IN ARID AND SEMI-ARID CLIMATE CONDIT

Micro: PREFERS FRIABLE, ROCKY, OR SHALLOW SANDY SOILS.

Occurrence No. 150 **Map Index:** 02093 **EO Index:** 28066

Occ Rank: None
Origin: Natural/Native occurrence
Presence: Extirpated
Trend: Unknown

Dates Last Seen
Element: 1951-03-17
Site: 1951-03-17

Record Last Updated: 2006-01-23

Quad Summary: Long Beach (3311872/089C)

County Summary: Los Angeles

Lat/Long: 33.77173º / -118.19937º
UTM: Zone-11 N3737492 E388942
Mapping Precision: NON-SPECIFIC
Symbol Type: POINT
Radius: 1/5 mile

Township: 05S
Range: 13W
Section: XX **Qtr:** XX
Meridian: S
Elevation: 25 ft

Location: 4TH AND DAISY, LONG BEACH.
Location Detail:
Ecological:
Threat:
General: LACM SPECIMENS #101342-3 COLLECTED 17 MAR 1951 BY H. SAMUELSON.
Owner/Manager: UNKNOWN

Phrynosoma coronatum (blainvillii population)

coast (San Diego) horned lizard

Element Code: ARACF12021

Status	NDDB Element Ranks	Other Lists
Federal: None	**Global:** G4G5	**CDFG Status:** SC
State: None	**State:** S3S4	

Habitat Associations

General: INHABITS COASTAL SAGE SCRUB AND CHAPARRAL IN ARID AND SEMI-ARID CLIMATE CONDIT

Micro: PREFERS FRIABLE, ROCKY, OR SHALLOW SANDY SOILS.

Occurrence No. 151 **Map Index:** 02213 **EO Index:** 28061

Occ Rank: None
Origin: Natural/Native occurrence
Presence: Possibly Extirpated
Trend: Unknown

Dates Last Seen
Element: 1957-04-14
Site: 1957-04-14

Record Last Updated: 2006-01-23

Quad Summary: Los Alamitos (3311871/089D)

County Summary: Los Angeles

Lat/Long: 33.83109º / -118.12146º
UTM: Zone-11 N3743993 E396228
Mapping Precision: NON-SPECIFIC
Symbol Type: POINT
Radius: 1/5 mile

Township: 04S
Range: 12W
Section: 15 **Qtr:** XX
Meridian: S
Elevation: 40 ft

Location: 3 MILES NORTH OF LONG BEACH STATE UNIVERSITY AND 100 FT EAST OF BELLFLOWER BLVD, LONG BEACH.

Location Detail: MAPPED AT HARTWELL PARK.

Ecological:

Threat:

General: LACM SPECIMEN #101354 COLLECTED 14 APR 1957 BY D. MANGUM.

Owner/Manager: UNKNOWN

Phrynosoma coronatum (blainvillii population)

coast (San Diego) horned lizard

Element Code: ARACF12021

Status	NDDB Element Ranks	Other Lists
Federal: None	**Global:** G4G5	**CDFG Status:** SC
State: None	**State:** S3S4	

Habitat Associations

General: INHABITS COASTAL SAGE SCRUB AND CHAPARRAL IN ARID AND SEMI-ARID CLIMATE CONDIT

Micro: PREFERS FRIABLE, ROCKY, OR SHALLOW SANDY SOILS.

Occurrence No. 152 **Map Index:** 02079 **EO Index:** 28063

Occ Rank: None
Origin: Natural/Native occurrence
Presence: Possibly Extirpated
Trend: Unknown

Dates Last Seen
Element: XXXX-XX-XX
Site: XXXX-XX-XX

Record Last Updated: 2006-01-23

Quad Summary: South Gate (3311882/089B)

County Summary: Los Angeles

Lat/Long: 33.87862º / -118.20758º
UTM: Zone-11 N3749353 E388321
Mapping Precision: NON-SPECIFIC
Symbol Type: POINT
Radius: 1/5 mile

Township: 03S
Range: 12W
Section: XX **Qtr:** XX
Meridian: S
Elevation: 60 ft

Location: 1 MILE WEST LOS ANGELES RIVER, 200 WEST BLOCK OF EAST 68TH ST, LONG BEACH.

Location Detail:

Ecological:

Threat:

General: LACM SPECIMEN #101361; DATE OF COLLECTION NOT GIVEN.

Owner/Manager: UNKNOWN

Phrynosoma coronatum (blainvillii population)

coast (San Diego) horned lizard

Element Code: ARACF12021

Status	NDDB Element Ranks	Other Lists
Federal: None	**Global:** G4G5	**CDFG Status:** SC
State: None	**State:** S3S4	

Habitat Associations

General: INHABITS COASTAL SAGE SCRUB AND CHAPARRAL IN ARID AND SEMI-ARID CLIMATE CONDIT

Micro: PREFERS FRIABLE, ROCKY, OR SHALLOW SANDY SOILS.

Occurrence No. 207 **Map Index:** 01796 **EO Index:** 28018

Occ Rank: None
Origin: Natural/Native occurrence
Presence: Extirpated
Trend: Unknown

Dates Last Seen
Element: XXXX-XX-XX
Site: XXXX-XX-XX

Record Last Updated: 1989-08-10

Quad Summary: Torrance (3311873/090D), Inglewood (3311883/090A)

County Summary: Los Angeles

Lat/Long: 33.86418º / -118.35641º
UTM: Zone-11 N3747924 E374535
Mapping Precision: NON-SPECIFIC
Symbol Type: POINT
Radius: 1 mile

Township: 03S
Range: 14W
Section: XX **Qtr:** XX
Meridian: S
Elevation: 100 ft

Location: EL NIDO, APPROX 8 MI NW OF LOS ANGELES.
Location Detail:
Ecological:
Threat:
General: USNM SPECIMENS #21965-67; COLLECTION DATE(S) UNKNOWN.
Owner/Manager: UNKNOWN

Phrynosoma coronatum (blainvillii population)

coast (San Diego) horned lizard

Element Code: ARACF12021

Status	NDDB Element Ranks	Other Lists
Federal: None	**Global:** G4G5	**CDFG Status:** SC
State: None	**State:** S3S4	

Habitat Associations

General: INHABITS COASTAL SAGE SCRUB AND CHAPARRAL IN ARID AND SEMI-ARID CLIMATE CONDIT

Micro: PREFERS FRIABLE, ROCKY, OR SHALLOW SANDY SOILS.

Occurrence No. 253 **Map Index:** 02248 **EO Index:** 27988

Occ Rank: None
Origin: Natural/Native occurrence
Presence: Extirpated
Trend: Unknown

Dates Last Seen
Element: XXXX-XX-XX
Site: XXXX-XX-XX

Record Last Updated: 1998-10-23

Quad Summary: Los Alamitos (3311871/089D)

County Summary: Los Angeles, Orange

Lat/Long: 33.77585º / -118.09178º
UTM: Zone-11 N3737838 E398909
Mapping Precision: NON-SPECIFIC
Symbol Type: POINT
Radius: 3/5 mile

Township: 05S
Range: 12W
Section: 01 **Qtr:** SW
Meridian: S
Elevation: 10 ft

Location: EAST OF LONG BEACH STATE UNIVERSITY, LONG BEACH.

Location Detail: ONE COLLECTED ALONG SAN GABRIEL RIVER NEAR 7TH ST. AND ONE COLLECTED ONE MILE EAST OF LONG BEACH STATE.

Ecological:

Threat: HABITAT ELIMINATED WHEN SAN GABRIEL RIVER WAS "CONCRETE-LINED".

General: LACM SPECIMENS; COLLECTION DATES UNKNOWN.

Owner/Manager: UNKNOWN

Phrynosoma coronatum (blainvillii population)

coast (San Diego) horned lizard

Element Code: ARACF12021

Status	NDDB Element Ranks	Other Lists
Federal: None	**Global:** G4G5	**CDFG Status:** SC
State: None	**State:** S3S4	

Habitat Associations

General: INHABITS COASTAL SAGE SCRUB AND CHAPARRAL IN ARID AND SEMI-ARID CLIMATE CONDIT

Micro: PREFERS FRIABLE, ROCKY, OR SHALLOW SANDY SOILS.

Occurrence No. 278 **Map Index:** 02237 **EO Index:** 27967

Occ Rank: None
Origin: Natural/Native occurrence
Presence: Possibly Extirpated
Trend: Unknown

Dates Last Seen
Element: XXXX-XX-XX
Site: XXXX-XX-XX

Record Last Updated: 1998-10-08

Quad Summary: Los Alamitos (3311871/089D), Seal Beach (3311861/072A)

County Summary: Orange, Los Angeles

Lat/Long: 33.74423º / -118.10420º
UTM: Zone-11 N3734344 E397722
Mapping Precision: NON-SPECIFIC
Symbol Type: POINT
Radius: 3/5 mile

Township: 05S
Range: 12W
Section: 14 **Qtr:** XX
Meridian: S
Elevation: 20 ft

Location: SEAL BEACH AND WEST SEAL BEACH.
Location Detail:
Ecological:
Threat: HEAVILY DEVELOPED AREA.
General: LACM SPECIMENS.
Owner/Manager: UNKNOWN

Polioptila californica californica

coastal California gnatcatcher

Element Code: ABPBJ08081

Status	NDDB Element Ranks	Other Lists
Federal: Threatened	**Global:** G3T2	**CDFG Status:** SC
State: None	**State:** S2	

Habitat Associations

General: OBLIGATE, PERMANENT RESIDENT OF COASTAL SAGE SCRUB BELOW 2500 FT IN SOUTHERN CALIFORNIA.

Micro: LOW, COASTAL SAGE SCRUB IN ARID WASHES, ON MESAS & SLOPES. NOT ALL AREAS CLASSIFIED AS COASTAL SAGE SCRUB ARE OCCUPIED.

Occurrence No. 30 **Map Index:** 01686 **EO Index:** 29840

Occ Rank: Good
Origin: Natural/Native occurrence
Presence: Presumed Extant
Trend: Decreasing

Dates Last Seen
Element: 2006-06-10
Site: 2006-06-10

Record Last Updated: 2008-06-12

Quad Summary: Redondo Beach (3311874/090C), San Pedro (3311863/073A), Torrance (3311873/090D)

County Summary: Los Angeles

Lat/Long: 33.74530º / -118.39689º
UTM: Zone-11 N3734792 E370611
Mapping Precision: NON-SPECIFIC
Symbol Type: POLYGON
Area:

Township: 05S
Range: 14W
Section: 18 **Qtr:** XX
Meridian: S
Elevation: 350 ft

Location: PALOS VERDES PENINSULA NEAR PT VINCENTE & LONG PT, NE TO CREST RD (INCLUDING MCCARRELL'S CYN), RANCHO PALOS VERDES.

Location Detail: ALONG PALOS VERDES DR W, PALOS VERDES DR S, & HAWTHORNE BLVD. RECENT DATA FROM PT VINCENTE PARK/CIVIC CENTER ('98 & 06), PENINSULA POINTE (ALBERO CT, '97-06), & BARKENTINE CYN PRESERVE ('00 & 06). UPDATED W/ 56 DIGITAL 80M POLYS FROM FWS.

Ecological: MOST FOUND IN AREAS OF SAGEBRUSH OR CACTUS SCRUB IN 1993-95 PENINSULA SURVEY. DOMINATED BY ARTEMISIA CALIFORNICA, ERIOGONUM FASCICULATUM, & SALVIA MELLIFERA. SOME AREAS NOW OPEN SPACE (PVPLC.ORG). MCCARRELL'S CYN (BARKENTINE) SIG HABITAT.

Threat: THREATENED BY ONGOING URBAN DEVELOPMENT AND FREE-ROAMING DOMESTIC CATS.

General: 1980: 5PRS & 1IND. '90: 24BRDS, 6TERR. '91: 2PRS. '95: 8PRS. '97: 5TERR, 6 NESTS, 19 FLDG. '98: 4PRS. '00: 12 AD, 12 JUV; 5 OBS. '01: 7PRS, 1 FLDG. '02: 7TERR, 2 FLDG. '03: 7PRS, 3UKN. '04: 11 AD, 2UKN. '06: 9 AD (ALBERO), 58 OBS.

Owner/Manager: CITY OF RANCHO PALOS VERDES

Polioptila californica californica

coastal California gnatcatcher

Element Code: ABPBJ08081

Status	NDDB Element Ranks	Other Lists
Federal: Threatened	**Global:** G3T2	**CDFG Status:** SC
State: None	**State:** S2	

Habitat Associations

General: OBLIGATE, PERMANENT RESIDENT OF COASTAL SAGE SCRUB BELOW 2500 FT IN SOUTHERN CALIFORNIA.

Micro: LOW, COASTAL SAGE SCRUB IN ARID WASHES, ON MESAS & SLOPES. NOT ALL AREAS CLASSIFIED AS COASTAL SAGE SCRUB ARE OCCUPIED.

Occurrence No. 31 **Map Index:** 15982 **EO Index:** 29841

Occ Rank: Unknown
Origin: Natural/Native occurrence
Presence: Presumed Extant
Trend: Unknown

Dates Last Seen
Element: 2006-08-09
Site: 2006-08-09

Record Last Updated: 2008-06-12

Quad Summary: Redondo Beach (3311874/090C)

County Summary: Los Angeles

Lat/Long: 33.76465º / -118.39907º
UTM: Zone-11 N3736941 E370438
Mapping Precision: NON-SPECIFIC
Symbol Type: POLYGON
Area:

Township: 05S
Range: 15W
Section: 12 **Qtr:** XX
Meridian: S
Elevation: 600 ft

Location: AGUA AMARGA CANYON, PALOS VERDES PENINSULA, PALOS VERDES ESTATES & RANCHO PALOS VERDES.

Location Detail: 1993-95 STUDY: AGUA AMARGA CYN WAS 1 OF 3 CYN'S THAT SUPPORTED MOST OF THE PALOS VERDES PENINSULA BREEDING POPULATION. FWS DIGITAL DATA: 9 AUG 06 SITE NAME PORTUGUESE BEND NATURE PRESERVE; 9 APR 06 AT 29941 HAWTHORNE BLVD.

Ecological: HABITAT IS COASTAL SAGE SCRUB, DOMINATED BY ARTEMISIA CALIFORNICA, ERIOGONUM FASCICULATUM, AND SALVIA MELLIFERA. THIS AREA IS CRITICAL TO THE SURVIVAL OF GNATCATCHERS ON THE PALOS VERDES PENINSULA. MUCH NOW IN OPEN SPACE PRESERVES IN 2008.

Threat: THREATENED BY ONGOING URBAN DEVELOPMENT.

General: 1980: 3 PRS OBS, 5-10 PRS EST. 1995: 4 PRS OBS. POOR SURVIVAL OF ADULTS & JUV'S DURING WINTER OF 1994-95. 2006: 2 DETECTED ON 9 APR BY S. REED (TERACOR), 3 GROUPS OF 1 & 2 GROUP OF 2 DETECTED ON 9 AUG BY J. TURNBULL ET AL (DUDEK).

Owner/Manager: CITY OF RANCHO PALOS VERDES

Polioptila californica californica

coastal California gnatcatcher

Element Code: ABPBJ08081

Status	NDDB Element Ranks	Other Lists
Federal: Threatened	**Global:** G3T2	**CDFG Status:** SC
State: None	**State:** S2	

Habitat Associations

General: OBLIGATE, PERMANENT RESIDENT OF COASTAL SAGE SCRUB BELOW 2500 FT IN SOUTHERN CALIFORNIA.

Micro: LOW, COASTAL SAGE SCRUB IN ARID WASHES, ON MESAS & SLOPES. NOT ALL AREAS CLASSIFIED AS COASTAL SAGE SCRUB ARE OCCUPIED.

Occurrence No. 33 **Map Index:** 01805 **EO Index:** 25114

Occ Rank: Unknown
Origin: Natural/Native occurrence
Presence: Presumed Extant
Trend: Unknown

Dates Last Seen
Element: 1980-XX-XX
Site: 1980-XX-XX

Record Last Updated: 2008-05-19

Quad Summary: Torrance (3311873/090D)
County Summary: Los Angeles

Lat/Long: 33.76757º / -118.35841º
UTM: Zone-11 N3737214 E374208
Mapping Precision: NON-SPECIFIC
Symbol Type: POLYGON
Area:

Township: 05S
Range: 14W
Section: 09 **Qtr:** XX
Meridian: S
Elevation: 750 ft

Location: SUNNYRIDGE RD, AGUA MAGNA CANYON NEAR ROLLING HILLS, VICINITY OF PALOS VERDES.

Location Detail: MAPPED TO PROVIDED MAP & 1994 AERIAL IMAGES.

Ecological: HABITAT IS COASTAL SAGE SCRUB, DOMINATED BY ARTEMISIA CALIFORNICA, ERIOGONUM FASCICULATUM, AND SALVIA MELLIFERA.

Threat: THREATENED BY ONGOING URBAN DEVELOPMENT, AS MANY MAJOR HABITAT AREAS ARE OWNED BY LAND COMPANIES.

General: 1-2 PAIRS OBSERVED; 5-10 PAIRS ESTIMATED.

Owner/Manager: UNKNOWN

Polioptila californica californica

coastal California gnatcatcher

Element Code: ABPBJ08081

Status	NDDB Element Ranks	Other Lists
Federal: Threatened	**Global:** G3T2	**CDFG Status:** SC
State: None	**State:** S2	

Habitat Associations

General: OBLIGATE, PERMANENT RESIDENT OF COASTAL SAGE SCRUB BELOW 2500 FT IN SOUTHERN CALIFORNIA.

Micro: LOW, COASTAL SAGE SCRUB IN ARID WASHES, ON MESAS & SLOPES. NOT ALL AREAS CLASSIFIED AS COASTAL SAGE SCRUB ARE OCCUPIED.

Occurrence No. 35 **Map Index:** 01722 **EO Index:** 25112

Occ Rank: Unknown
Origin: Natural/Native occurrence
Presence: Presumed Extant
Trend: Unknown

Dates Last Seen
Element: 1980-XX-XX
Site: 1980-XX-XX
Record Last Updated: 1989-08-10

Quad Summary: Beverly Hills (3411814/111C), Inglewood (3311883/090A), Venice (3311884/090B), Hollywood (3411813/111D)

County Summary: Los Angeles

Lat/Long: 33.99055º / -118.38285º
UTM: Zone-11 N3761970 E372277
Mapping Precision: NON-SPECIFIC
Symbol Type: POINT
Radius: 1 mile

Township: 02S
Range: 14W
Section: 18 **Qtr:** SE
Meridian: S
Elevation: 200 ft

Location: BALDWIN HILLS, VICINITY CULVER CITY

Location Detail:

Ecological: HABITAT IS COASTAL SAGE SCRUB, DOMINATED BY ARTEMISIA CALIFRONICA, ERIOGONUM FASCICULATUM, AND SALVIA MELLIFERA.

Threat: THREATENED BY ONGOING URBAN DEVELOPMENT, AS MANY MAJOR HABITAT AREAS ARE OWNED BY LAND COMPANIES.

General: ONE INDIVIDUAL OBSERVED; 1-3 PAIRS ESTIMATED.

Owner/Manager: UNKNOWN

Polioptila californica californica

coastal California gnatcatcher

Element Code: ABPBJ08081

Status	NDDB Element Ranks	Other Lists
Federal: Threatened	**Global:** G3T2	**CDFG Status:** SC
State: None	**State:** S2	

Habitat Associations

General: OBLIGATE, PERMANENT RESIDENT OF COASTAL SAGE SCRUB BELOW 2500 FT IN SOUTHERN CALIFORNIA.

Micro: LOW, COASTAL SAGE SCRUB IN ARID WASHES, ON MESAS & SLOPES. NOT ALL AREAS CLASSIFIED AS COASTAL SAGE SCRUB ARE OCCUPIED.

Occurrence No. 108 **Map Index:** 01741 **EO Index:** 29842

Occ Rank: Excellent
Origin: Natural/Native occurrence
Presence: Presumed Extant
Trend: Stable

Dates Last Seen
Element: 2006-08-18
Site: 2006-08-18
Record Last Updated: 2008-06-12

Quad Summary: San Pedro (3311863/073A), Redondo Beach (3311874/090C), Torrance (3311873/090D)

County Summary: Los Angeles

Lat/Long: 33.74529º / -118.35486º
UTM: Zone-11 N3734739 E374504
Mapping Precision: NON-SPECIFIC
Symbol Type: POLYGON
Area:

Township: 05S
Range: 14W
Section: 16 **Qtr:** XX
Meridian: S
Elevation: 800 ft

Location: BOUNDED BY ABALONE COVE, PORTUGUESE BEND, SAN PEDRO HILL, ROLLING HILLS, & ALTAMIRA CYN ON PALOS VERDES PENINSULA.

Location Detail: KLONDIKE CANYON IS CRITICAL TO SURVIVAL OF GNATCATCHERS ON PALOS VERDES PENINSULA. UPDATED WITH 44 FWS 80M POLYGONS. 2000 SITE NAME UPPER FILIORUM. 2006 SITE NAME PORTUGUESE BEND NATURE PRESERVE.

Ecological: HABITAT: COASTAL SAGE SCRUB DOMINATED BY ARTEMISIA CALIFORNICA, ERIOGONUM FASCICULATUM, ATRIPLEX LENTIFORMIS, ENCELIA CALIFORNICA, RHUS INTEGRIFOLIA, AND SALVIA MELLIFERA. MANY AREAS NOW NATURE & OPEN SPACE PRESERVES (PVPLC.ORG).

Threat: THREATENED BY URBAN DEVELOPMENT AND FREE-ROAMING DOMESTIC CATS.

General: 1980: 5 PRS & 3 INDIV, EST 15-25 PRS. 1990: 21 INDIV, 5 TERR. 1992: 4 BREEDING INDIV. 1995: 11 PRS. 1996: 3 BREEDING PRS. 2000: 2 PRS (NAT. RES. CONSULT.). 2006: 121 DETECTIONS (DUDEK).

Owner/Manager: CITY OF RANCHO PALOS VERDES

Polioptila californica californica

coastal California gnatcatcher

Element Code: ABPBJ08081

Status	NDDB Element Ranks	Other Lists
Federal: Threatened	**Global:** G3T2	**CDFG Status:** SC
State: None	**State:** S2	

Habitat Associations

General: OBLIGATE, PERMANENT RESIDENT OF COASTAL SAGE SCRUB BELOW 2500 FT IN SOUTHERN CALIFORNIA.

Micro: LOW, COASTAL SAGE SCRUB IN ARID WASHES, ON MESAS & SLOPES. NOT ALL AREAS CLASSIFIED AS COASTAL SAGE SCRUB ARE OCCUPIED.

Occurrence No. 450 **Map Index:** 24341 **EO Index:** 6520

Occ Rank: Good
Origin: Natural/Native occurrence
Presence: Presumed Extant
Trend: Stable

Dates Last Seen
Element: 2005-09-24
Site: 2005-09-24
Record Last Updated: 2008-05-21

Quad Summary: Torrance (3311873/090D)
County Summary: Los Angeles

Lat/Long: 33.77287º / -118.30204º
UTM: Zone-11 N3737734 E379435
Mapping Precision: NON-SPECIFIC
Symbol Type: POLYGON
Area:

Township: 05S
Range: 14W
Section: 01 **Qtr:** XX
Meridian: S
Elevation: 150 ft

Location: DEFENSE FUEL SUPPLY POINT, SOUTH OF PALOS VERDES DRIVE N, & WEST OF GAFFEY STREET, SAN PEDRO.

Location Detail: MAPPED TO FWS DIGITAL POLYS, HISTORICAL DATA, & AVAIL. HABITAT IN AERIAL IMAGES ('94, '07). IN 1993 SITE WAS ESTIMATED TO HOLD 10% OF TOTAL PALOS VERDES PENINSULA POPULATION. HABITAT RESTORATION EFFORTS UNDERWAY (WWW.PVPLC.ORG/LAND/DFSP).

Ecological: HABITAT CONSISTS OF COASTAL SAGE SCRUB COMPRISED OF ARTEMISIA CALIFORNICA, ENCELIA CALIFORNICA, ERIOGONUM FASCICULATUM, LOTUS SCOPARIUS, HEMIZONIA FASCICULATA AND LOTUS PURSHIANUS. PATCH TO THE SOUTH IS DOMINATED BY ARTEMISIA CALIFORNICA.

Threat: THREATENED BY FERAL CATS, HABITAT DEGRADATION - INVASION OF EXOTIC PLANTS

General: 1993: 28 APR, 5 PRS OBS (7 PRS EST) FROM 0730-1130 HRS. 2002: 27 AUG, 2 ADULTS(?) OBS. 2003: MAY-JUN, 10 ADULTS, 4 JUV'S, & 4 UNK AGE OBS. 2005: 24 SEP, 2 OBS BY S. REED (TERACOR). PALOS VERDES BLUE BUTTERFLY POP PRESENT.

Owner/Manager: DOD-NAVY

Polioptila californica californica

coastal California gnatcatcher

Element Code: ABPBJ08081

Status	NDDB Element Ranks	Other Lists
Federal: Threatened	**Global:** G3T2	**CDFG Status:** SC
State: None	**State:** S2	

Habitat Associations

General: OBLIGATE, PERMANENT RESIDENT OF COASTAL SAGE SCRUB BELOW 2500 FT IN SOUTHERN CALIFORNIA.

Micro: LOW, COASTAL SAGE SCRUB IN ARID WASHES, ON MESAS & SLOPES. NOT ALL AREAS CLASSIFIED AS COASTAL SAGE SCRUB ARE OCCUPIED.

Occurrence No. 837 **Map Index:** 56386 **EO Index:** 56402

Occ Rank: Fair
Origin: Natural/Native occurrence
Presence: Presumed Extant
Trend: Unknown

Dates Last Seen
Element: 2003-06-XX
Site: 2003-06-XX
Record Last Updated: 2004-08-16

Quad Summary: Newport Beach (3311768/071B), Seal Beach (3311861/072A)

County Summary: Orange

Lat/Long: 33.69857º / -118.00176º
UTM: Zone-11 N3729185 E407161
Mapping Precision: NON-SPECIFIC
Symbol Type: POINT
Radius: 1/10 mile

Township: 05S
Range: 11W
Section: 35 **Qtr:** N
Meridian: S
Elevation: 60 ft

Location: LOCATED BETWEEN GOLDEN WEST ST AND THE SOUTHERN PACIFIC RAILROAD, SW FOUNTAIN VALLEY.

Location Detail: JUST SOUTH OF TALBERT AVE.

Ecological: HABITAT CONSISTS OF COASTAL SAGE SCRUB DOM BY ARTEMISIA CALIFORNICA, ERIOGONUM FASCICULATUM AND ENCELIA - SOME DISTURBED PORTIONS W/ TREE TOBACCO & NON-NATIVE GRASSES. VERY LIMITED PARCEL OF COASTAL SAGE SCRUB. SURR BY URBAN DEVELOPMENT.

Threat:

General: 1 PAIR OBSERVED UTILIZING THIS PATCH OF COASTAL SAGE SCRUB. BROWN-HEADED COWBIRD TRAPPING HAS TAKEN PLACE IN IMMEDIATE VICINITY.

Owner/Manager: UNKNOWN

Polioptila californica californica

coastal California gnatcatcher

Element Code: ABPBJ08081

Status	NDDB Element Ranks	Other Lists
Federal: Threatened	**Global:** G3T2	**CDFG Status:** SC
State: None	**State:** S2	

Habitat Associations

General: OBLIGATE, PERMANENT RESIDENT OF COASTAL SAGE SCRUB BELOW 2500 FT IN SOUTHERN CALIFORNIA.

Micro: LOW, COASTAL SAGE SCRUB IN ARID WASHES, ON MESAS & SLOPES. NOT ALL AREAS CLASSIFIED AS COASTAL SAGE SCRUB ARE OCCUPIED.

Occurrence No. 841 **Map Index:** 58979 **EO Index:** 59015

Occ Rank: Fair
Origin: Natural/Native occurrence
Presence: Presumed Extant
Trend: Unknown

Dates Last Seen
Element: 2004-12-21
Site: 2004-12-21
Record Last Updated: 2004-12-27

Quad Summary: Seal Beach (3311861/072A)
County Summary: Orange

Lat/Long: 33.70722º / -118.04056º
UTM: Zone-11 N3730180 E403575
Mapping Precision: SPECIFIC
Symbol Type: POINT
Radius: 80 meters

Township: 05S
Range: 11W
Section: 28 **Qtr:** SW
Meridian: S
Elevation: 1 ft

Location: JUST NORTH OF THE WINTERSBURG CHANNEL, 0.3 MILE SOUTH OF LOS PATOS AVENUE AND BOLSA CHICA STREET, HUNTINGTON HARBOUR

Location Detail: SITE IS LOCATED NEAR THE PROPERTY DIVISION BETWEEN THE "SHEA PARKSIDE" AND "HEARTHSIDE BRIGHTWATER" PARCELS.

Ecological: HABITAT CONSISTS OF DISTURBED SALTMARSH, DOMINATED BY SALICORNIA, DISTICHLIS SPICATA, & BASSIA HYSSOPIFOLIA, ALSO WITH MYOPORUM LACTUM; DISTURBED COASTAL BLUFF SCRUB, DOMINATED BY ISOMERA ARBOREA, ENCELIA CALIFORNICA, & OPUNTIA LITTORALIS.

Threat: THREATS INCLUDE PAINTBALLERS, DOG-WALKERS, AND FERAL CATS/FOXES; THE MAIN FUTURE THREAT, HOWEVER, IS DEVELOPMENT.

General: PAIR WAS OBSERVED IN THE DISTURBED COASTAL SALTMARSH, AND THEY WERE HEARD CALLING FROM THE DISTURBED COASTAL BLUFF SCRUB, ON 21 DEC 2004.

Owner/Manager: PVT, ORA COUNTY

Polioptila californica californica

coastal California gnatcatcher

Element Code: ABPBJ08081

Status	NDDB Element Ranks	Other Lists
Federal: Threatened	**Global:** G3T2	**CDFG Status:** SC
State: None	**State:** S2	

Habitat Associations

General: OBLIGATE, PERMANENT RESIDENT OF COASTAL SAGE SCRUB BELOW 2500 FT IN SOUTHERN CALIFORNIA.

Micro: LOW, COASTAL SAGE SCRUB IN ARID WASHES, ON MESAS & SLOPES. NOT ALL AREAS CLASSIFIED AS COASTAL SAGE SCRUB ARE OCCUPIED.

Occurrence No. 884 **Map Index:** 71292 **EO Index:** 72193

Occ Rank: Unknown
Origin: Natural/Native occurrence
Presence: Presumed Extant
Trend: Unknown

Dates Last Seen
Element: 2005-08-31
Site: 2005-08-31
Record Last Updated: 2008-08-22

Quad Summary: Whittier (3311881/089A)
County Summary: Los Angeles

Lat/Long: 33.98414º / -118.01303º
UTM: Zone-11 N3760860 E406429
Mapping Precision: SPECIFIC
Symbol Type: POINT
Radius: 80 meters

Township: 02S
Range: 11W
Section: 22 **Qtr:** XX
Meridian: S
Elevation: 875 ft

Location: NORTH EDGE OF WORSHAM LANDFILL, 0.3 MI EAST OF CANYON DR. & SOUTH OF WORSHAM CREEK, WHITTIER.

Location Detail: MAPPED TO FWS 80M DIGITAL POLYGON. SITE NAME: PUENTE HILLS LANDFILL NATIVE HABITAT PRESERVATION AUTHORITY.

Ecological:

Threat:

General: 1 DETECTED ON 31 AUG 2005 BY M. ILIFF ET. A. (LSA ASSOCIATES INC).

Owner/Manager: CITY OF WHITTIER

Polioptila californica californica

coastal California gnatcatcher

Element Code: ABPBJ08081

Status	NDDB Element Ranks	Other Lists
Federal: Threatened	**Global:** G3T2	**CDFG Status:** SC
State: None	**State:** S2	

Habitat Associations

General: OBLIGATE, PERMANENT RESIDENT OF COASTAL SAGE SCRUB BELOW 2500 FT IN SOUTHERN CALIFORNIA.

Micro: LOW, COASTAL SAGE SCRUB IN ARID WASHES, ON MESAS & SLOPES. NOT ALL AREAS CLASSIFIED AS COASTAL SAGE SCRUB ARE OCCUPIED.

Occurrence No. 891 **Map Index:** 71336 **EO Index:** 72239

Occ Rank: Unknown
Origin: Natural/Native occurrence
Presence: Presumed Extant
Trend: Unknown

Dates Last Seen
Element: 2006-04-13
Site: 2006-04-13
Record Last Updated: 2008-06-12

Quad Summary: Torrance (3311873/090D)
County Summary: Los Angeles

Lat/Long: 33.76968º / -118.37282º
UTM: Zone-11 N3737466 E372876
Mapping Precision: SPECIFIC
Symbol Type: POINT
Radius: 80 meters

Township: 05S
Range: 14W
Section: 05 **Qtr:** SE
Meridian: S
Elevation: 1,100 ft

Location: ALONG INDIAN PEAK RD NORTHWEST OF CRENSHAW BLVD, PALOS VERDES HILLS, RANCHO PALOS VERDES.

Location Detail: MAPPED TO FWS 80M POLYGON. SITE NAME: CRESTRIDGE ESTATES PROJECT SITE.

Ecological: FROM 2007 AERIAL IMAGE, APPEARS TO BE A REMNANT PATCH (27 ACRES) OF COAST SAGE SCRUB.

Threat: DEVELOPMENT.

General: 2 DETECTED ON 13 APR 2006 BY G. MILLER (PSOMAS).

Owner/Manager: UNKNOWN

Polioptila californica californica

coastal California gnatcatcher

Element Code: ABPBJ08081

Status	NDDB Element Ranks	Other Lists
Federal: Threatened	**Global:** G3T2	**CDFG Status:** SC
State: None	**State:** S2	

Habitat Associations

General: OBLIGATE, PERMANENT RESIDENT OF COASTAL SAGE SCRUB BELOW 2500 FT IN SOUTHERN CALIFORNIA.

Micro: LOW, COASTAL SAGE SCRUB IN ARID WASHES, ON MESAS & SLOPES. NOT ALL AREAS CLASSIFIED AS COASTAL SAGE SCRUB ARE OCCUPIED.

Occurrence No. 892 **Map Index:** 71337 **EO Index:** 72240

Occ Rank: Unknown
Origin: Natural/Native occurrence
Presence: Presumed Extant
Trend: Unknown

Dates Last Seen
Element: 1980-XX-XX
Site: 1980-XX-XX

Record Last Updated: 2008-05-19

Quad Summary: Redondo Beach (3311874/090C)
County Summary: Los Angeles

Lat/Long: 33.78269º / -118.40507º
UTM: Zone-11 N3738949 E369909
Mapping Precision: NON-SPECIFIC
Symbol Type: POLYGON
Area:

Township: 04S
Range: 15W
Section: 36 **Qtr:** XX
Meridian: S
Elevation: 650 ft

Location: BETWEEN VIA ZURITA & VIA CORONEL, CORONELL CANYON, PALOS VERDES PENINSULA.

Location Detail: MAPPED TO PROVIDED MAP. LOCALITY: CORONELL CANYON; REFERENCE #: 357.

Ecological: FROM 2007 AERIAL IMAGE, APPEARS TO BE A REMNANT PATCH (APPROX. 10 ACRES) OF COASTAL SAGE SCRUB, NOW CITY PARKLAND.

Threat:

General: 1 PAIR DETECTED DURING FIELD WORK CONDUCTED BETWEEN DEC 1979 - DEC 1980 IN WINTER, SPRING & FALL.

Owner/Manager: CITY OF PALOS VERDES ESTATES

Rallus longirostris levipes

light-footed clapper rail

Element Code: ABNME05014

Status	NDDB Element Ranks	Other Lists
Federal: Endangered	**Global:** G5T1T2	**CDFG Status:**
State: Endangered	**State:** S1	

Habitat Associations

General: FOUND IN SALT MARSHES TRAVERSED BY TIDAL SLOUGHS, WHERE CORDGRASS AND PICKLEWEED ARE THE DOMINANT VEGETATION.

Micro: REQUIRES DENSE GROWTH OF EITHER PICKLEWEED OR CORDGRASS FOR NESTING OR ESCAPE COVER; FEEDS ON MOLLUSCS AND CRUSTACEANS.

Occurrence No. 7 **Map Index:** 15949 **EO Index:** 2506

Occ Rank: Unknown
Origin: Natural/Native occurrence
Presence: Presumed Extant
Trend: Fluctuating

Dates Last Seen
Element: 2007-06-05
Site: 2007-06-05

Record Last Updated: 2008-05-29

Quad Summary: Seal Beach (3311861/072A)

County Summary: Orange

Lat/Long: 33.73977º / -118.07696º
UTM: Zone-11 N3733823 E400240
Mapping Precision: SPECIFIC
Symbol Type: POLYGON
Area: 800.0 acres

Township: 05S
Range: 12W
Section: 13 **Qtr:** XX
Meridian: S
Elevation:

Location: SEAL BEACH NATIONAL WILDLIFE REFUGE, ANAHEIM BAY - US NAVAL WEAPONS STATION, SEAL BEACH.

Location Detail: ONE OF THREE MAJOR SUBPOPULATIONS. 200+ CLAPPER RAILS DIRECTLY SIGHTED HERE DURING A HIGH TIDE COUNT IN JANUARY 1959.

Ecological: 111 NESTING RAFTS PLACED THROUGHOUT THE REFUGE, IN 1995 50 OF THE RAFTS HAD NESTS ON THEM. 2007: 565 ACRES OF SALT MARSH , 60 ACRES OF MUDFLATS THAT ARE EXPOSED DAILY & 114 ACRES OF CHANNEL & OPEN WATER.

Threat: EXOTIC RED FOX PREDATION ALMOST ELIMINATED POP. POP INCREASED IN MID '90'S. PREDATION BY NATIVE RAPTORS KEEPING POP LOW

General: 1980:30 PR. '81:19. '82:28. '83:20. '84:24. '85:11. '86:5. '87:7. '88:14. '89:6. '90:16. '91:28. '92:36. '93:65. '94:66. '95:51. '96:52. '97:37. '98:16. "99:15. "00:10. '01:11. '02:24. '03:23. '04:16. '05:15. '06:21. '07:24.

Owner/Manager: USFWS-SEAL BEACH NWS, DOD

Rallus longirostris levipes

light-footed clapper rail

Element Code: ABNME05014

Status		NDDB Element Ranks		Other Lists	
Federal:	Endangered	**Global:**	G5T1T2	**CDFG Status:**	
State:	Endangered	**State:**	S1		

Habitat Associations

General: FOUND IN SALT MARSHES TRAVERSED BY TIDAL SLOUGHS, WHERE CORDGRASS AND PICKLEWEED ARE THE DOMINANT VEGETATION.

Micro: REQUIRES DENSE GROWTH OF EITHER PICKLEWEED OR CORDGRASS FOR NESTING OR ESCAPE COVER; FEEDS ON MOLLUSCS AND CRUSTACEANS.

Occurrence No. 25 **Map Index:** 22868 **EO Index:** 27296

Occ Rank: Fair
Origin: Natural/Native occurrence
Presence: Presumed Extant
Trend: Unknown

Dates Last Seen
Element: 2007-06-05
Site: 2007-06-05

Record Last Updated: 2008-05-05

Quad Summary: Seal Beach (3311861/072A)

County Summary: Orange

Lat/Long: 33.70246º / -118.04338º
UTM: Zone-11 N3729654 E403309
Mapping Precision: NON-SPECIFIC
Symbol Type: POINT
Radius: 3/5 mile

Township: 05S
Range: 11W
Section: XX **Qtr:** XX
Meridian: S
Elevation: 5 ft

Location: BOLSA CHICA ECOLOGICAL RESERVE, 1.4 MILES SE OF THE JUNCTION OF WARNER AVENUE WITH HWY 1 (PCH), SOUTH OF SUNSET BEACH.

Location Detail: 2 FEB 1993, BIRD OBSERVED NEAR THE PARKING LOT, IN AN AREA TO THE LEFT, BORDERING THE WALKWAY, NEAR THE BACKDUNE AREA.

Ecological: HABITAT IS SOUTHERN COASTAL SALT MARSH.

Threat:

General: ONE ADULT OBSERVED FORAGING ON 2 FEB 1993. NO BREEDING PAIRS OBSERVED 1980-2007, A FALL OR WINTER OCCURRENCE OBSERVED, 1994-98, 2002, 2006-07.

Owner/Manager: DFG-BOLSA CHICA ER

Rhaphiomidas terminatus terminatus

El Segundo flower-loving fly

Element Code: IIDIP05022

Status	NDDB Element Ranks	Other Lists
Federal: None	**Global:** G1T1	**CDFG Status:**
State: None	**State:** S1	

Habitat Associations

General: PRESUMED EXTINCT BUT RECENTLY DISCOVERED ON MALAGA DUNES, LOS ANGELES COUNTY.

Micro: PERCHED DUNES.

Occurrence No. 1 **Map Index:** 65035 **EO Index:** 65118

Occ Rank: Unknown
Origin: Natural/Native occurrence
Presence: Presumed Extant
Trend: Unknown

Dates Last Seen
Element: 2001-07-XX
Site: 2001-07-XX
Record Last Updated: 2006-07-07

Quad Summary: Redondo Beach (3311874/090C)
County Summary: Los Angeles

Lat/Long: 33.80281º / -118.39551º
UTM: Zone-11 N3741168 E370825
Mapping Precision: NON-SPECIFIC
Symbol Type: POLYGON
Area:

Township: 04S
Range: 14W
Section: 30 **Qtr:** NW
Meridian: S
Elevation: 50 ft

Location: MALAGA DUNES, MALAGA COVE.
Location Detail:
Ecological: A PERCHED DUNE FORMATION IN UPPER MALAGA CANYON, THAT IS DISJUNCT FROM THE BLOW SAND DUNE FORMATION AGAINST THE COASTAL BLUFFS EXTENDING ALONG TORRANCE BEACH TO THE NORTH OF THE MALAGA CANYON DISCHARGE.
Threat:
General: HISTORICALLY FOUND AT EL SEGUNDO DUNES; WAS CONSIDERED EXTINCT. A "SMALL COLONY" WAS FOUND IN 2001; ONE MALE SPECIMEN DEPOSITED IN THE UC RIVERSIDE ENTOMOLOGY RESEARCH COLLECTION. GEO06A01 HAS PHOTO OF ECLOSING FEMALE.
Owner/Manager: UNKNOWN

Rynchops niger

black skimmer

Element Code: ABNNM14010

Status	NDDB Element Ranks	Other Lists
Federal: None	**Global:** G5	**CDFG Status:** SC
State: None	**State:** S1S3	

Habitat Associations

General: NESTS ON GRAVEL BARS, LOW ISLETS, AND SANDY BEACHES, IN UNVEGETATED SITES. NESTING COLONIES USUALLY LESS THAN 200 PAIRS.

Micro:

Occurrence No. 6 **Map Index:** 02324 **EO Index:** 48004

Occ Rank: Unknown
Origin: Natural/Native occurrence
Presence: Presumed Extant
Trend: Unknown

Dates Last Seen
Element: 1990-XX-XX
Site: 1990-XX-XX
Record Last Updated: 2002-05-24

Quad Summary: Seal Beach (3311861/072A)
County Summary: Orange

Lat/Long: 33.69369º / -118.04219º
UTM: Zone-11 N3728681 E403409
Mapping Precision: NON-SPECIFIC
Symbol Type: POINT
Radius: 1/5 mile

Township: 05S
Range: 11W
Section: XX **Qtr:** XX
Meridian: S
Elevation:

Location: NORTH ISLAND OF BOLSA CHICA, PART OF BOLSA CHICA ECOLOGICAL RESERVE.
Location Detail:
Ecological:
Threat:
General: 220 NESTS OBSERVED.
Owner/Manager: DFG-BOLSA CHICA ER

Sagittaria sanfordii

Sanford's arrowhead

Element Code: PMALI040Q0

Status	NDDB Element Ranks	Other Lists
Federal: None	**Global:** G3	**CNPS List:** 1B.2
State: None	**State:** S3.2	

Habitat Associations

General: MARSHES AND SWAMPS.

Micro: IN STANDING OR SLOW-MOVING FRESHWATER PONDS, MARSHES, AND DITCHES. 0-610M.

Occurrence No. 1 **Map Index:** 24647 **EO Index:** 6886

Occ Rank: Unknown
Origin: Natural/Native occurrence
Presence: Presumed Extant
Trend: Unknown

Dates Last Seen
Element: 1975-07-28
Site: 1975-07-28
Record Last Updated: 1993-12-13

Quad Summary: Seal Beach (3311861/072A)
County Summary: Orange

Lat/Long: 33.71674º / -118.02558º
UTM: Zone-11 N3731221 E404974
Mapping Precision: SPECIFIC
Symbol Type: POLYGON
Area: 5.3 acres

Township: 05S
Range: 11W
Section: 21 **Qtr:** SE
Meridian: S
Elevation: 5 ft

Location: EAST GARDEN GROVE-WINTERSBURG CANAL NORTH OF WARNER STREET, HUNTINGTON BEACH.

Location Detail: MAPPED ALONG STREAM BANK JUST WEST OF SPRINGDALE STREET AND NORTH OF WARNER STREET BRIDGE CROSSING OF EAST GARDEN GROVE-WINTERSBURG FLOOD CONTROL CHANNEL (NO. C05).

Ecological: GROWING ON BANK OF FLOOD CONTROL CHANNEL.

Threat:

General: KNOWN ONLY FROM COLLECTION IN 1975 BY G.A. MARSH (IRVC 16099). THIS IS THE SOUTHERNMOST REPORTED OCCURRENCE OF THIS SPECIES.

Owner/Manager: UNKNOWN

Sidalcea neomexicana

Salt Spring checkerbloom

Element Code: PDMAL110J0

Status	NDDB Element Ranks	Other Lists
Federal: None	**Global:** G4?	**CNPS List:** 2.2
State: None	**State:** S2S3	

Habitat Associations

General: ALKALI PLAYAS, BRACKISH MARSHES, CHAPARRAL, COASTAL SCRUB, LOWER MONTANE CONIFEROUS FOREST, MOJAVEAN DESERT SCRUB.

Micro: ALKALI SPRINGS AND MARSHES. 0-1500M.

Occurrence No. 3 **Map Index:** 35236 **EO Index:** 21131

Occ Rank: Unknown
Origin: Natural/Native occurrence
Presence: Presumed Extant
Trend: Unknown

Dates Last Seen
Element: 1936-05-25
Site: 1936-05-25
Record Last Updated: 1996-06-28

Quad Summary: Los Alamitos (3311871/089D)
County Summary: Los Angeles

Lat/Long: 33.77051º / -118.09936º
UTM: Zone-11 N3737254 E398202
Mapping Precision: NON-SPECIFIC
Symbol Type: POINT
Radius: 1/5 mile

Township: 05S
Range: 12W
Section: 02 **Qtr:** NE
Meridian: S
Elevation: 10 ft

Location: BRYANT RANCH, EAST OF LONG BEACH NEAR 7TH STREET AT SAN GABRIEL FLOOD CONTROL.

Location Detail: 1400 FEET SOUTH OF 7TH STREET ON THE WEST SIDE OF THE FLOOD CONTROL CHANNEL. COLLECTIONS FROM "BRYANT RANCH, NW CORNER OF BRYANT AVE AND HANSEN RD, EAST OF LOS ALAMITOS." ALSO MAPPED AT THIS VICINITY.

Ecological: UPPER SONORAN GRASSLAND WITH FINE, ALKALINE SOILS.

Threat:

General: THREE COLLECTIONS ATTRIBUTED TO THIS SITE; C.B WOLF #5650 RSA, WOLF #2591 CAS, AND EVERETT #6691 DS.

Owner/Manager: UNKNOWN

Sorex ornatus salicornicus

southern California saltmarsh shrew

Element Code: AMABA01104

Status	NDDB Element Ranks	Other Lists
Federal: None	**Global:** G5T1?	**CDFG Status:** SC
State: None	**State:** S1	

Habitat Associations

General: COASTAL MARSHES IN LOS ANGELES, ORANGE AND VENTURA COUNTIES.

Micro: REQUIRES DENSE VEGETATION AND WOODY DEBRIS FOR COVER.

Occurrence No. 2 **Map Index:** 02270 **EO Index:** 59234

Occ Rank: Unknown
Origin: Natural/Native occurrence
Presence: Presumed Extant
Trend: Unknown

Dates Last Seen
Element: 1968-11-17
Site: 1968-11-17

Record Last Updated: 2005-01-10

Quad Summary: Seal Beach (3311861/072A), Los Alamitos (3311871/089D)

County Summary: Orange

Lat/Long: 33.73881º / -118.07696º
UTM: Zone-11 N3733717 E400239
Mapping Precision: NON-SPECIFIC
Symbol Type: POINT
Radius: 1 mile

Township: 05S
Range: 12W
Section: 18 **Qtr:** NW
Meridian: S
Elevation: 3 ft

Location: SEAL BEACH.

Location Detail: EXACT LOCATION UNKNOWN. MAPPED IN THE GENERAL VICINTY OF SEAL BEACH NAVAL WEAPONS STATION.

Ecological:

Threat:

General: 1 MALE AND ONE FEMALE COLLECTED 17 NOV 1968 BY K. JOLLIE AT "SEAL BEACH NAVAL WEAPONS STATION, S BOLSA AVE, ALONG MAIN SLOUGH." DEPOSITED AT LACM # 67430 & 67341.

Owner/Manager: UNKNOWN

Southern Coastal Bluff Scrub

Element Code: CTT31200CA

Status	NDDB Element Ranks	Other Lists
Federal: None	**Global:** G1	
State: None	**State:** S1.1	

Habitat Associations

General:

Micro:

Occurrence No. 23 **Map Index:** 17053 **EO Index:** 9609

Occ Rank: Unknown
Origin: Natural/Native occurrence
Presence: Presumed Extant
Trend: Unknown

Dates Last Seen
Element: 1990-09-01
Site: 1990-09-01
Record Last Updated: 1998-07-13

Quad Summary: San Pedro (3311863/073A), Redondo Beach (3311874/090C)
County Summary: Los Angeles

Lat/Long: 33.75515º / -118.41529º
UTM: Zone-11 N3735907 E368922
Mapping Precision: NON-SPECIFIC
Symbol Type: POLYGON
Area:

Township: 05S
Range: 15W
Section: XX **Qtr:** XX
Meridian: S
Elevation: 40 ft

Location: BLUFFS OF PALOS VERDES PENINSULA FROM MALAGA COVE TO CABRILLO BEACH.

Location Detail: ALONG BLUFFS AND STEEP SLOPES OF IMMEDIATE COAST; DISTRIBUTION PATCHY WITHIN BOUNDED AREA DUE TO DEVELOPMENT AND DISTURBANCE.

Ecological: NATIVE SPP INCLUDE RHUS INTEGRIFOLIA, ENCELIA CA, ISOCOMA MENZIESII, LYCIUM CALIFORNICA, ATRIPLEX LENTIFORMIS, ISOMERIS, OPUNTIA SPP., ERIOGONUM CINEREUM, DUDLEYA VIRENS; W/LOWER PORTIONS OF SLOPES, SUAEDA CALIFORNICA. 15-90% COVER.

Threat: DEVELOPMENT AND DISTURBANCE ASSOCIATED WITH RECREATION, INVASIVE EXOTICS.

General: CONDITION AND COMPOSITION VARIES ALONG THE PENINSULA; LARGE PORTIONS WITH INVASIVE EXOTICS. THIS WAS OCC #023 OF CTT31200CA.

Owner/Manager: UNKNOWN

Southern Coastal Salt Marsh

Element Code: CTT52120CA

Status
Federal: None
State: None

NDDB Element Ranks
Global: G2
State: S2.1

Other Lists

Habitat Associations
General:
Micro:

Occurrence No. 15 **Map Index:** 02224 **EO Index:** 26125

Occ Rank: Unknown
Origin: Natural/Native occurrence
Presence: Presumed Extant
Trend: Unknown

Dates Last Seen
Element: 1976-XX-XX
Site: 1976-XX-XX
Record Last Updated: 1998-07-20

Quad Summary: Los Alamitos (3311871/089D)
County Summary: Los Angeles

Lat/Long: 33.76478º / -118.10811º
UTM: Zone-11 N3736627 E397384
Mapping Precision: NON-SPECIFIC
Symbol Type: POINT
Radius: 1/5 mile

Township: 05S
Range: 12W
Section: 11 **Qtr:** XX
Meridian: S
Elevation: 5 ft

Location: NEAR ALAMITOS BAY IN CITY OF LONG BEACH.
Location Detail: SM MARSH (REMNANT OF 2400 HISTORIC MARSH AC, SPETH, 1976).
Ecological:
Threat: SLATED FOR DEVEL ACC TO HENDRICKSON, 1976; NEAR POWERPLANT, OIL FIELD, URBANIZATION.
General: THIS WAS OCC #015 OF CTT52120CA.
Owner/Manager: UNKNOWN

Southern Coastal Salt Marsh

Element Code: CTT52120CA

Status
Federal: None
State: None

NDDB Element Ranks
Global: G2
State: S2.1

Other Lists

Habitat Associations
General:
Micro:

Occurrence No. 16 **Map Index:** 15949 **EO Index:** 25966

Occ Rank: Unknown
Origin: Natural/Native occurrence
Presence: Presumed Extant
Trend: Unknown

Dates Last Seen
Element: 1988-02-10
Site: 1988-02-10
Record Last Updated: 1998-07-20

Quad Summary: Seal Beach (3311861/072A)
County Summary: Orange

Lat/Long: 33.73977º / -118.07696º
UTM: Zone-11 N3733823 E400240
Mapping Precision: SPECIFIC
Symbol Type: POLYGON
Area: 800.0 acres

Township: 05S
Range: 12W
Section: 13 **Qtr:** XX
Meridian: S
Elevation:

Location: ANAHEIM BAY. BETWEEN BOLSA CHICA & ALAMITOS BAY. INCLUDES R11W, R12W; SECT 13, 18.

Location Detail: BOUNDARY MAPPED FROM AERIAL PHOTOS. 565 ACRES (INCLUDES 61 DEGRADED ACRES), REMAIN OF HISTORIC 2300 ACRES (SPETH, 1976).

Ecological: HAS SPECIES OF ALL MARSH ZONES. MOST OF UPPER ZONES RECLAIMED. FLOWS RESTRICTED BEHIND CASE AND BOLSA ROADS.

Threat: ONE CHANNEL DREDGED, HARBOR CONSTRUCTED, RECREATION AREA ON SOUTH END.

General: THIS WAS OCC #016 OF CTT52120CA.

Owner/Manager: USFWS-SEAL BEACH NWS, DOD

Southern Coastal Salt Marsh

Element Code: CTT52120CA

Status	NDDB Element Ranks	Other Lists
Federal: None	**Global:** G2	
State: None	**State:** S2.1	

Habitat Associations

General:

Micro:

Occurrence No. 21 **Map Index:** 02332 **EO Index:** 25387

Occ Rank: Unknown
Origin: Natural/Native occurrence
Presence: Presumed Extant
Trend: Decreasing

Dates Last Seen
Element: 1988-02-10
Site: 1988-02-10
Record Last Updated: 1998-07-20

Quad Summary: Seal Beach (3311861/072A)
County Summary: Orange

Lat/Long: 33.69803º / -118.04191º
UTM: Zone-11 N3729162 E403440
Mapping Precision: SPECIFIC
Symbol Type: POLYGON
Area: 1,121.5 acres

Township: 05S
Range: 11W
Section: XX **Qtr:** XX
Meridian: S
Elevation: 0 ft

Location: BOLSA CHICA ECOLOGICAL RESERVE AND SURROUNDING AREA.

Location Detail: MOST OF BOUNDARY FROM AERIAL PHOTO. MUCH OF HISTORIC MARSH DEGRADED (DAMS OIL WELLS, CHANNELS, DIKES, DEVEL).

Ecological: 230 HECTARES OF MARSH WITH PARTIAL TIDAL ACTION. NON-TIDAL PORTION NEAR RABBIT ISLAND. SPECIES LIST AT CNDDB.

Threat:

General: RESTORATION POTENTIAL IS HIGH. LEAST TERN AND BELDINGS SAVANNAH SPARROW NEST HERE. THIS WAS OCCURRENCE #021 OF CTT52120CA.

Owner/Manager: DPR-BOLSA CHICA SB

Southern Dune Scrub

Element Code: CTT21330CA

Status
Federal: None
State: None

NDDB Element Ranks
Global: G1
State: S1.1

Other Lists

Habitat Associations
General:
Micro:

Occurrence No. 8 **Map Index:** 20586 **EO Index:** 9742

Occ Rank: Poor
Origin: Natural/Native occurrence
Presence: Presumed Extant
Trend: Unknown

Dates Last Seen
Element: 1984-09-15
Site: 1984-09-15
Record Last Updated: 1998-07-13

Quad Summary: Seal Beach (3311861/072A)
County Summary: Orange

Lat/Long: 33.70090º / -118.04679º
UTM: Zone-11 N3729485 E402991
Mapping Precision: SPECIFIC
Symbol Type: POLYGON
Area: 16.5 acres

Township: 05S
Range: 11W
Section: 29 **Qtr:** XX
Meridian: S
Elevation: 40 ft

Location: RABBIT ISLAND, IN BOLSA CHICA ECOLOGICAL RESERVE.

Location Detail: COVERS MOST OF THE ISLAND.

Ecological: HIGHLY DEGRADED AND DISTURBED COASTAL DUNE SCRUB WITH MOSTLY SENESCENT EARLY SUCCESSIONAL VEG. DOMINATED BY LOTUS SCOPARIUS. ALSO NEMACAULIS DENUDATA, HETEROTHECA GRANDIFLORA, JUNCUS MEXICANUS, SALIX SPP. ATRIPLEX CANESCENA. (SEE GEN COMM)

Threat: POSSIBLE DEVELOPMENT.

General: UNABLE TO CONVERT TO FLORISTIC CLASSIFICATION, LACKS SPP. INFO.

Owner/Manager: DFG-BOLSA CHICA ER

Southern Foredunes

Element Code: CTT21230CA

Status	NDDB Element Ranks	Other Lists
Federal: None	**Global:** G2	
State: None	**State:** S2.1	

Habitat Associations

General:

Micro:

Occurrence No. 20 **Map Index:** 20585 **EO Index:** 9743

Occ Rank: Poor
Origin: Natural/Native occurrence
Presence: Presumed Extant
Trend: Unknown

Dates Last Seen
Element: 1984-12-10
Site: 1984-12-10
Record Last Updated: 1998-07-13

Quad Summary: Seal Beach (3311861/072A)
County Summary: Orange

Lat/Long: 33.69754º / -118.04914º
UTM: Zone-11 N3729114 E402769
Mapping Precision: SPECIFIC
Symbol Type: POLYGON
Area: 65.5 acres

Township: 05S
Range: 11W
Section: XX **Qtr:** XX
Meridian: S
Elevation: 20 ft

Location: LIES ALONG THE STATE BEACH BETWEEN WARNER AVENUE AND USGS BM 7.

Location Detail: ALONG THE LENGTH OF BOLSA CHICA STATE BEACH ON BOTH SIDES OF THE PACIFIC COAST HIGHWAY.

Ecological: NATIVE SPECIES HAVE RE-INTRODUCED THEMSELVES INTO THE PLANTERS IN THE PARKING LOT PARTICULARLY AFTER HIGH SURF WASHED OUT INTRODUCED SPP. CALYSTEGIA SOLDANELLA AND AMBROSIA CHAMISSONIS. ALSO EUCRYPTA ALBA.

Threat: HEAVY RECREATIONAL USE.

General: THIS WAS OCC #020 OF CTT21230CA.

Owner/Manager: DPR-BOLSA CHICA SB

Spea hammondii

western spadefoot

Element Code: AAABF02020

Status	NDDB Element Ranks	Other Lists
Federal: None	**Global:** G3	**CDFG Status:** SC
State: None	**State:** S3	

Habitat Associations

General: OCCURS PRIMARILY IN GRASSLAND HABITATS, BUT CAN BE FOUND IN VALLEY-FOOTHILL HARDWOOD WOODLANDS.

Micro: VERNAL POOLS ARE ESSENTIAL FOR BREEDING AND EGG-LAYING.

Occurrence No. 128 **Map Index:** 38309 **EO Index:** 33316

Occ Rank: Good
Origin: Natural/Native occurrence
Presence: Presumed Extant
Trend: Unknown

Dates Last Seen
Element: 1998-02-18
Site: 1998-02-18
Record Last Updated: 1998-03-10

Quad Summary: La Habra (3311788/088B), Whittier (3311881/089A)
County Summary: Los Angeles

Lat/Long: 33.98396º / -118.00209º
UTM: Zone-11 N3760829 E407439
Mapping Precision: NON-SPECIFIC
Symbol Type: POINT
Radius: 1/5 mile

Township: 02S
Range: 11W
Section: 23 **Qtr:** NE
Meridian: S
Elevation: 1,100 ft

Location: 0.5 MILE SOUTH OF WORKMAN HILL, IN THE PUENTE HILLS, NE OF WHITTIER.

Location Detail: BORDERING SKYLINE #2 MOTORWAY, WHICH PASSES THROUGH THE NORTHERN PART OF THE SITE.

Ecological: HABITAT CONSISTS OF SOME TEMPORARY PONDS WITHIN GRAZED NON-NATIVE GRASSLAND; SOME RUSSIAN THISTLE PRESENT.

Threat: THREATS INCLUDE HEAVY GRAZING IN THE PAST.

General: 2 ADULTS OBSERVED ON 18 FEB 1998.

Owner/Manager: CITY OF WHITTIER, PVT

Sternula antillarum browni

California least tern

Element Code: ABNNM08103

Status		NDDB Element Ranks		Other Lists	
Federal:	Endangered	**Global:**	G4T2T3Q	**CDFG Status:**	
State:	Endangered	**State:**	S2S3		

Habitat Associations

General: NESTS ALONG THE COAST FROM SAN FRANCISCO BAY SOUTH TO NORTHERN BAJA CALIFORNIA.

Micro: COLONIAL BREEDER ON BARE OR SPARSELY VEGETATED, FLAT SUBSTRATES: SAND BEACHES, ALKALI FLATS, LAND FILLS, OR PAVED AREAS.

Occurrence No. 15 **Map Index:** 02226 **EO Index:** 25697

Occ Rank: None
Origin: Natural/Native occurrence
Presence: Extirpated
Trend: Unknown

Dates Last Seen
Element: 1980-XX-XX
Site: 1981-XX-XX
Record Last Updated: 1998-11-23

Quad Summary: Los Alamitos (3311871/089D)
County Summary: Los Angeles

Lat/Long: 33.75416º / -118.10587º
UTM: Zone-11 N3735447 E397579
Mapping Precision: NON-SPECIFIC
Symbol Type: POINT
Radius: 1/10 mile

Township: 05S
Range: 12W
Section: 11 **Qtr:** NW
Meridian: S
Elevation: 10 ft

Location: EAST OF PACIFIC COAST HWY BETWEEN N BANK OF THE SAN GABRIEL RIVER & "THE MARKETPLACE". FILL AREA.

Location Detail:

Ecological: HABITAT IS LANDFILL OF HARD CLAY COVERED WITH SEVERAL INCHES OF FINE DUST.

Threat:

General: SITE WAS USED CONTINUOUSLY BETWEEN 1971 AND 1980 BY 35-65 PAIRS WITH 0-70 YOUNG FLEDGED. SITE WAS LOST IN 1981 TO EXPANSION OF "THE MARKET PLACE."

Owner/Manager: UNKNOWN

Sternula antillarum browni

California least tern

Element Code: ABNNM08103

Status	NDDB Element Ranks	Other Lists
Federal: Endangered	**Global:** G4T2T3Q	**CDFG Status:**
State: Endangered	**State:** S2S3	

Habitat Associations

General: NESTS ALONG THE COAST FROM SAN FRANCISCO BAY SOUTH TO NORTHERN BAJA CALIFORNIA.

Micro: COLONIAL BREEDER ON BARE OR SPARSELY VEGETATED, FLAT SUBSTRATES: SAND BEACHES, ALKALI FLATS, LAND FILLS, OR PAVED AREAS.

Occurrence No. 16 **Map Index:** 02005 **EO Index:** 25695

Dates Last Seen

Occ Rank: None
Origin: Natural/Native occurrence
Presence: Extirpated
Trend: Unknown

Element: 1985-07-31
Site: 1987-XX-XX

Record Last Updated: 1998-10-20

Quad Summary: San Pedro (3311863/073A), Torrance (3311873/090D)

County Summary: Los Angeles

Lat/Long: 33.75057º / -118.25508º
UTM: Zone-11 N3735207 E383754
Mapping Precision: NON-SPECIFIC
Symbol Type: POINT
Radius: 1/5 mile

Township: 05S
Range: 13W
Section: XX **Qtr:** XX
Meridian: S
Elevation: 5 ft

Location: REEVES FIELD ON TERMINAL ISLAND. TAKE TERMINAL ISLAND FREEWAY TO SEASIDE BLVD.

Location Detail:

Ecological: SITE NOW A PARKING AREA FOR IMPORTED CARS.

Threat: LANDFILL & GRADING DISRUPTED COLONY IN 1973 & 74. AREA PAVED AS A PARKING LOT PRIOR TO 1987 SEASON & COLONY EXTIRPATED.

General: 1974:10-12 PR; 1975: 24 PR; 1976: 60 PR ~ 80 FLEDGED; 1977: 85 PR, ~80 FLEDGED; 0 PR 1978-80 & 1982. 1981: ~45 PR, ~ 7 FLEDGED. 46 NESTS IN 1983, GOOD FLEDGING. 28 NESTS IN 1984, MOST YOUNG LOST TO KESTREL. 23 NESTS IN 1985.

Owner/Manager: PVT

Sternula antillarum browni

California least tern

Element Code: ABNNM08103

Status	NDDB Element Ranks	Other Lists
Federal: Endangered	**Global:** G4T2T3Q	**CDFG Status:**
State: Endangered	**State:** S2S3	

Habitat Associations

General: NESTS ALONG THE COAST FROM SAN FRANCISCO BAY SOUTH TO NORTHERN BAJA CALIFORNIA.

Micro: COLONIAL BREEDER ON BARE OR SPARSELY VEGETATED, FLAT SUBSTRATES: SAND BEACHES, ALKALI FLATS, LAND FILLS, OR PAVED AREAS.

Occurrence No. 19 **Map Index:** 02365 **EO Index:** 25692

Occ Rank: None
Origin: Natural/Native occurrence
Presence: Extirpated
Trend: Unknown

Dates Last Seen
Element: 1977-XX-XX
Site: 1978-XX-XX
Record Last Updated: 1996-01-11

Quad Summary: Seal Beach (3311861/072A)
County Summary: Orange

Lat/Long: 33.70056º / -118.01950º
UTM: Zone-11 N3729422 E405520
Mapping Precision: NON-SPECIFIC
Symbol Type: POINT
Radius: 1/5 mile

Township: 05S
Range: 11W
Section: 34 **Qtr:** NW
Meridian: S
Elevation:

Location: BOLSA CHICA SOUTH OF SLATER AVE BETWEEN EDWARDS ST & SOUTH END OF SPRINGDALE ST.
Location Detail:
Ecological: SITE LOCATED ON A LARGE LANDFILL. TERNS NESTED HERE IN 1977, THE FIRST NESTING ATTEMPT IN YEARS, SITE WAS DEVELOPED IN 1978.
Threat: MANY CAT & DOG TRACKS SEEN IN THE AREA OF THE NESTS.
General: THIS SITE SUPPORTED A MASSIVE BREEDING COLONY IN THE EARLY 1900'S. IN 1977, 7 PAIRS FLEDGED 0 YOUNG, WHICH MAY HAVE BEEN A RENESTING ATTEMPT BY THE SAN GABRIEL RIVER COLONY.
Owner/Manager: PVT-SIGNAL LANDMARK CO

Sternula antillarum browni

California least tern

Element Code: ABNNM08103

Status		NDDB Element Ranks		Other Lists	
Federal:	Endangered	**Global:**	G4T2T3Q	**CDFG Status:**	
State:	Endangered	**State:**	S2S3		

Habitat Associations

General: NESTS ALONG THE COAST FROM SAN FRANCISCO BAY SOUTH TO NORTHERN BAJA CALIFORNIA.

Micro: COLONIAL BREEDER ON BARE OR SPARSELY VEGETATED, FLAT SUBSTRATES: SAND BEACHES, ALKALI FLATS, LAND FILLS, OR PAVED AREAS.

Occurrence No. 20 **Map Index:** 02190 **EO Index:** 25690

Occ Rank: Unknown
Origin: Natural/Native occurrence
Presence: Presumed Extant
Trend: Unknown

Dates Last Seen
Element: 1977-XX-XX
Site: 1977-XX-XX

Record Last Updated: 1998-10-20

Quad Summary: Long Beach (3311872/089C)
County Summary: Los Angeles

Lat/Long: 33.75511º / -118.13792º
UTM: Zone-11 N3735585 E394612
Mapping Precision: SPECIFIC
Symbol Type: POINT
Radius: 80 meters

Township: 05S
Range: 12W
Section: 09 **Qtr:** N
Meridian: S
Elevation: 10 ft

Location: BELMONT SHORE BEACH AT FOOT OF CORONA AVE, LONG BEACH.
Location Detail:
Ecological: SITE SERVES AS A NIGHT ROOST FOR UP TO 280 TERNS, BEFORE AND AFTER NESTING.
Threat:
General: MANY FLEDGLINGS PRESENT (UP TO 25%) AFTER NESTING.
Owner/Manager: UNKNOWN

Sternula antillarum browni

California least tern

Element Code: ABNNM08103

Status		NDDB Element Ranks		Other Lists	
Federal:	Endangered	**Global:**	G4T2T3Q	**CDFG Status:**	
State:	Endangered	**State:**	S2S3		

Habitat Associations

General: NESTS ALONG THE COAST FROM SAN FRANCISCO BAY SOUTH TO NORTHERN BAJA CALIFORNIA.

Micro: COLONIAL BREEDER ON BARE OR SPARSELY VEGETATED, FLAT SUBSTRATES: SAND BEACHES, ALKALI FLATS, LAND FILLS, OR PAVED AREAS.

Occurrence No. 56 **Map Index:** 15986 **EO Index:** 25661

Occ Rank: None
Origin: Natural/Native occurrence
Presence: Extirpated
Trend: Unknown

Dates Last Seen
Element: 1972-XX-XX
Site: 1972-XX-XX

Record Last Updated: 1998-10-06

Quad Summary: Seal Beach (3311861/072A)

County Summary: Orange

Lat/Long: 33.72858º / -118.07652º
UTM: Zone-11 N3732582 E400268
Mapping Precision: NON-SPECIFIC
Symbol Type: POLYGON
Area:

Township: 05S
Range: 11W
Section: 19 **Qtr:** S
Meridian: S
Elevation: 10 ft

Location: SUNSET AQUATIC PARK, HUNTINGTON BEACH.

Location Detail:

Ecological: SANDY, LANDFILL BEACH.

Threat:

General: 22 NESTS OBSERVED ON LANDFILL; FROM NORTH AMERICAN NEST RECORD CARD PROGRAM. SITE ACTIVE FROM 1969 TO 1972; NEARLY 100 PAIRS NESTED HERE IN 1970.

Owner/Manager: ORANGE COUNTY

Sternula antillarum browni

California least tern

Element Code: ABNNM08103

Status		NDDB Element Ranks		Other Lists	
Federal:	Endangered	**Global:**	G4T2T3Q	**CDFG Status:**	
State:	Endangered	**State:**	S2S3		

Habitat Associations

General: NESTS ALONG THE COAST FROM SAN FRANCISCO BAY SOUTH TO NORTHERN BAJA CALIFORNIA.

Micro: COLONIAL BREEDER ON BARE OR SPARSELY VEGETATED, FLAT SUBSTRATES: SAND BEACHES, ALKALI FLATS, LAND FILLS, OR PAVED AREAS.

Occurrence No. 59 **Map Index:** 36769 **EO Index:** 2505

Occ Rank: Unknown
Origin: Natural/Native occurrence
Presence: Presumed Extant
Trend: Fluctuating

Dates Last Seen
Element: 1996-XX-XX
Site: 1996-XX-XX

Record Last Updated: 1998-10-08

Quad Summary: Seal Beach (3311861/072A)

County Summary: Orange

Lat/Long: 33.73867º / -118.07353º
UTM: Zone-11 N3733698 E400556
Mapping Precision: NON-SPECIFIC
Symbol Type: POINT
Radius: 1/10 mile

Township: 05S
Range: 11W
Section: 18 **Qtr:** NW
Meridian: S
Elevation:

Location: NASA ISLAND IN SEAL BEACH NATIONAL WILDLIFE REFUGE, ANAHEIM BAY.

Location Detail: LEAST TERN SURVEYS PRIOR TO 1979 DO NOT INDICATE ANY NESTING IN ANAHEIM BAY.

Ecological: AREA WAS ENHANCED FOR LEAST TERN IN 1979.

Threat: RED FOX PREDATION IS A CONTINUING PROBLEM.

General: 1979: 6 PR. '80 & '81: ~40 PR ~20 FLEDGED. '82: 16 PR 2 FLGD. '83: 4 PR 2 FLGD. '84: 22 PR 33 FLGD. '85: 20 PR 3 FLGD. '87: 69 PR 100 FLGD. '88: ~82 PR ~65 FLGD. '90: 102 PR ~146 FLGD. '91 & '92: ~204 PR ~275 FLGD. '96: 150 PR 100 FLGD.

Owner/Manager: USFWS-SEAL BEACH NWS, DOD

Sternula antillarum browni

California least tern

Element Code: ABNNM08103

Status		NDDB Element Ranks		Other Lists	
Federal:	Endangered	**Global:**	G4T2T3Q	**CDFG Status:**	
State:	Endangered	**State:**	S2S3		

Habitat Associations

General: NESTS ALONG THE COAST FROM SAN FRANCISCO BAY SOUTH TO NORTHERN BAJA CALIFORNIA.

Micro: COLONIAL BREEDER ON BARE OR SPARSELY VEGETATED, FLAT SUBSTRATES: SAND BEACHES, ALKALI FLATS, LAND FILLS, OR PAVED AREAS.

Occurrence No. 63 **Map Index:** 02008 **EO Index:** 25657

Occ Rank: Unknown
Origin: Natural/Native occurrence
Presence: Presumed Extant
Trend: Increasing

Dates Last Seen
Element: 1996-08-01
Site: 1996-08-01

Record Last Updated: 1998-10-20

Quad Summary: San Pedro (3311863/073A), Long Beach (3311872/089C)

County Summary:

Lat/Long: 33.73862º / -118.25258º
UTM: Zone-11 N3733879 E383970
Mapping Precision: NON-SPECIFIC
Symbol Type: POINT
Radius: 1/5 mile

Township: 99X
Range: 99X
Section: XX **Qtr:** XX
Meridian: S
Elevation:

Location: TERMINAL ISLAND LANDFILL SITE SOUTH OF FERRY STREET & EAST OF EARLE STREET (AKA FERRY STREET SITE).

Location Detail:

Ecological: SITE CREATED BY INTRODUCTION OF NEW LANDFILL IN ABOUT 1980.

Threat: THREATS INCLUDE HARRASSMENT BY CROWS; CROW ERADICATION NEEDED IF COLONY IS TO SURVIVE. FERAL CATS ALSO A PROBLEM.

General: 1982: 70 NESTS, 15 FLDGD; 1983: 45 NESTS, 30 FLDGD; 1984: 105 NESTS, GOOD FLDGNG; 1985: 76 NESTS, GOOD FLDGNG; 1987: 40 PR, POOR FLDGNG. 1988: 4-6 PR, ABANDONED. 1990: 32 PR, 12 FLDGD. 1991: 2 PR. 1992: 0 PR. 1996: 56 PR, 50 FLDGD.

Owner/Manager: DOD-NAVY

Sternula antillarum browni

California least tern

Element Code: ABNNM08103

Status	NDDB Element Ranks	Other Lists
Federal: Endangered	**Global:** G4T2T3Q	**CDFG Status:**
State: Endangered	**State:** S2S3	

Habitat Associations

General: NESTS ALONG THE COAST FROM SAN FRANCISCO BAY SOUTH TO NORTHERN BAJA CALIFORNIA.

Micro: COLONIAL BREEDER ON BARE OR SPARSELY VEGETATED, FLAT SUBSTRATES: SAND BEACHES, ALKALI FLATS, LAND FILLS, OR PAVED AREAS.

Occurrence No. 64 **Map Index:** 02324 **EO Index:** 23134

Occ Rank: Unknown
Origin: Natural/Native occurrence
Presence: Presumed Extant
Trend: Increasing

Dates Last Seen
Element: 1990-XX-XX
Site: 1990-XX-XX

Record Last Updated: 1995-09-19

Quad Summary: Seal Beach (3311861/072A)

County Summary: Orange

Lat/Long: 33.69369º / -118.04219º
UTM: Zone-11 N3728681 E403409
Mapping Precision: NON-SPECIFIC
Symbol Type: POINT
Radius: 1/5 mile

Township: 05S
Range: 11W
Section: XX **Qtr:** XX
Meridian: S
Elevation:

Location: BOLSA CHICA NORTH, PART OF BOLSA CHICA ECOLOGICAL RESERVE.

Location Detail:

Ecological: NESTING HABITAT CREATED IN 1977-78 AS PART OF A MARSH RESTORATION PROJECT.

Threat: RED FOX DESTROYED 70% OF NESTS AT BOLSA CHICA IN 1988. 2 FOXES TRAPPED IN 1990 PRIOR TO ANY PREDATION OF TERNS.

General: 1979, 15-20 PAIRS FLEDGED <5 YOUNG; 1982, 90 NESTS WITH GOOD FLEDGING; 1984, 146 NESTS (82 PAIRS) COMBINED (N & S) FLEDGED 45 YOUNG; 1985, 96 NESTS FLEDGED 65 YOUNG; 1987, 48-50 PAIRS FLEDGED ABOUT 12 YOUNG; 1988, 9 PAIRS FLEDGED 7 YOUNG.

Owner/Manager: DFG-BOLSA CHICA ER

Sternula antillarum browni

California least tern

Element Code: ABNNM08103

Status	NDDB Element Ranks	Other Lists
Federal: Endangered	**Global:** G4T2T3Q	**CDFG Status:**
State: Endangered	**State:** S2S3	

Habitat Associations

General: NESTS ALONG THE COAST FROM SAN FRANCISCO BAY SOUTH TO NORTHERN BAJA CALIFORNIA.

Micro: COLONIAL BREEDER ON BARE OR SPARSELY VEGETATED, FLAT SUBSTRATES: SAND BEACHES, ALKALI FLATS, LAND FILLS, OR PAVED AREAS.

Occurrence No. 65 **Map Index:** 02334 **EO Index:** 25656

Occ Rank: Unknown
Origin: Natural/Native occurrence
Presence: Presumed Extant
Trend: Increasing

Dates Last Seen
Element: 1990-XX-XX
Site: 1990-XX-XX
Record Last Updated: 1995-09-19

Quad Summary: Seal Beach (3311861/072A)
County Summary: Orange

Lat/Long: 33.68798º / -118.03713º
UTM: Zone-11 N3728043 E403872
Mapping Precision: NON-SPECIFIC
Symbol Type: POINT
Radius: 1/5 mile

Township: 05S
Range: 11W
Section: XX **Qtr:** XX
Meridian: S
Elevation:

Location: BOLSA CHICA SOUTH, PART OF BOLSA CHICA ECOLOGICAL RESERVE.
Location Detail:
Ecological: NESTING HABITAT CREATED IN 1977-78 AS A PART OF A MARSH RESTORATION PROJECT.
Threat: RED FOX DESTROYED 70% OF NESTS AT BOLSA CHICA IN 1988. 2 TRAPPED IN JUNE 1990 PRIOR TO ANY TERN PREDATION.
General: 1979, 19-23 PAIRS FLEDGED <5 YOUNG; 1983, 9 NESTS; 1984, 18 PAIRS NESTED; 1985, 22 NESTS FLEDGED 0; 1987, 30-32 PAIRS FLEDGED 50; 1988, 80-85 PAIRS FLEDGED 55-60. 1989 126 PR; 180 NESTS IN JUNE 1990.
Owner/Manager: DFG-BOLSA CHICA ER

Sternula antillarum browni

California least tern

Element Code: ABNNM08103

Status		NDDB Element Ranks		Other Lists	
Federal:	Endangered	**Global:**	G4T2T3Q	**CDFG Status:**	
State:	Endangered	**State:**	S2S3		

Habitat Associations

General: NESTS ALONG THE COAST FROM SAN FRANCISCO BAY SOUTH TO NORTHERN BAJA CALIFORNIA.

Micro: COLONIAL BREEDER ON BARE OR SPARSELY VEGETATED, FLAT SUBSTRATES: SAND BEACHES, ALKALI FLATS, LAND FILLS, OR PAVED AREAS.

Occurrence No. 66 **Map Index:** 02216 **EO Index:** 25655

Occ Rank: None
Origin: Natural/Native occurrence
Presence: Extirpated
Trend: Unknown

Dates Last Seen
Element: 1986-XX-XX
Site: 1988-XX-XX

Record Last Updated: 1998-11-23

Quad Summary: Los Alamitos (3311871/089D)

County Summary: Los Angeles

Lat/Long: 33.76057º / -118.11836º
UTM: Zone-11 N3736170 E396430
Mapping Precision: NON-SPECIFIC
Symbol Type: POINT
Radius: 1/10 mile

Township: 05S
Range: 12W
Section: 10 **Qtr:** XX
Meridian: S
Elevation:

Location: COSTA DEL SOL. CONSTRUCTION SITE EAST SIDE & ADJACENT TO MARINE STADIUM IN LONG BEACH.

Location Detail:

Ecological:

Threat: 1988, HEAVY CONSTRUCTION UNDERWAY; SITE MAY NO LONGER BE A VIABLE NESTING AREA.

General: 1982: 23 PR NESTED ON RECTANGULAR, BULKHEADED, GRAVEL-COVERED BAY. 1983: 25 PR, 14 FLEDGED; 1984, 5 PR, 7 FLEDGED; 1985: 33 PR, 3 FLEDGED (HEAVY PREDATION BY KESTREL); 1986: 4 PR, 0 FLEDGED. AREA NOT USED IN 1987 OR 1988.

Owner/Manager: PVT

Sternula antillarum browni

California least tern

Element Code: ABNNM08103

Status	NDDB Element Ranks	Other Lists
Federal: Endangered	**Global:** G4T2T3Q	**CDFG Status:**
State: Endangered	**State:** S2S3	

Habitat Associations

General: NESTS ALONG THE COAST FROM SAN FRANCISCO BAY SOUTH TO NORTHERN BAJA CALIFORNIA.

Micro: COLONIAL BREEDER ON BARE OR SPARSELY VEGETATED, FLAT SUBSTRATES: SAND BEACHES, ALKALI FLATS, LAND FILLS, OR PAVED AREAS.

Occurrence No. 78 **Map Index:** 01942 **EO Index:** 14719

Occ Rank: Unknown
Origin: Natural/Native occurrence
Presence: Presumed Extant
Trend: Unknown

Dates Last Seen
Element: 1977-08-03
Site: 1977-08-03
Record Last Updated: 1998-10-20

Quad Summary: Torrance (3311873/090D)
County Summary: Los Angeles

Lat/Long: 33.78585º / -118.29271º
UTM: Zone-11 N3739162 E380318
Mapping Precision: SPECIFIC
Symbol Type: POLYGON
Area: 55.0 acres

Township: 04S
Range: 14W
Section: XX **Qtr:** XX
Meridian: S
Elevation: 30 ft

Location: HARBOR LAKE IN HARBOR PARK.

Location Detail: BIRDS USE THE MUDFLATS ALONG THE SHORELINE.

Ecological: A MAJOR POST-BREEDING FORAGING AREA FOR THE BIRDS FROM THE TERMINAL ISLAND COLONY, WHICH APPEAR TO MOVE HERE AS SOON AS THE YOUNG ARE ABLE TO FLY.

Threat: HUMAN DISTURBANCE.

General: TERNS OBSERVED HERE IN AUG 1975. 100-125 TERNS (INCLUDING 33 JUVENILES) OBSERVED 22 JULY 1976. 25 ADULTS & 25 JUVENILES OBSERVED 3 AUG 1977.

Owner/Manager: CITY OF LOS ANGELES

Suaeda esteroa

estuary seablite

Element Code: PDCHE0P0D0

Status	NDDB Element Ranks	Other Lists
Federal: None	**Global:** G4	**CNPS List:** 1B.2
State: None	**State:** S3.2	

Habitat Associations

General: MARSHES AND SWAMPS.

Micro: COASTAL SALT MARSHES IN CLAY, SILT, AND SAND SUBSTRATES. 0-5M.

Occurrence No. 14 **Map Index:** 02237 **EO Index:** 48865

Occ Rank: Unknown
Origin: Natural/Native occurrence
Presence: Presumed Extant
Trend: Unknown

Dates Last Seen
Element: 1923-09-19
Site: 1923-09-19
Record Last Updated: 2002-10-01

Quad Summary: Los Alamitos (3311871/089D), Seal Beach (3311861/072A)

County Summary: Orange, Los Angeles

Lat/Long: 33.74423º / -118.10420º
UTM: Zone-11 N3734344 E397722
Mapping Precision: NON-SPECIFIC
Symbol Type: POINT
Radius: 3/5 mile

Township: 05S
Range: 12W
Section: 14 **Qtr:** XX
Meridian: S
Elevation: 20 ft

Location: SEAL BEACH.

Location Detail: EXACT LOCATION UNKNOWN MAPPED BY CNDDB IN VICINITY OF SEAL BEACH.

Ecological:

Threat:

General: SITE ALSO REPRESENTED BY 1930 COLLECTION BY FOSBERG (S3179 LAM) AT 'ANAHEIM LANDING' AND CITATION IN REISER'S 'RARE PLANTS OF SAN DIEGO COUNTY' (2001). NEEDS FIELDWORK.

Owner/Manager: UNKNOWN

Suaeda esteroa

estuary seablite

Element Code: PDCHE0P0D0

Status	NDDB Element Ranks	Other Lists
Federal: None	**Global:** G4	**CNPS List:** 1B.2
State: None	**State:** S3.2	

Habitat Associations

General: MARSHES AND SWAMPS.

Micro: COASTAL SALT MARSHES IN CLAY, SILT, AND SAND SUBSTRATES. 0-5M.

Occurrence No. 15 **Map Index:** 48866 **EO Index:** 48866

Occ Rank: Unknown
Origin: Natural/Native occurrence
Presence: Presumed Extant
Trend: Unknown

Dates Last Seen
Element: 1957-09-28
Site: 1957-09-28

Record Last Updated: 2002-10-01

Quad Summary: Seal Beach (3311861/072A)

County Summary: Orange

Lat/Long: 33.72830º / -118.08319º
UTM: Zone-11 N3732557 E399650
Mapping Precision: NON-SPECIFIC
Symbol Type: POINT
Radius: 1/5 mile

Township: 05S
Range: 12W
Section: 24 **Qtr:** XX
Meridian: S
Elevation:

Location: SURFSIDE.

Location Detail: EXACT LOCATION UNKNOWN, MAPPED IN THE VICINITY OF SURFSIDE.

Ecological:

Threat:

General: SITE ALSO REPRESENTED BY CITATION IN REISER'S 'RARE PLANTS OF SAN DIEGO COUNTY' (2001). NEEDS FIELDWORK.

Owner/Manager: UNKNOWN

Suaeda esteroa

estuary seablite

Element Code: PDCHE0P0D0

Status	NDDB Element Ranks	Other Lists
Federal: None	**Global:** G4	**CNPS List:** 1B.2
State: None	**State:** S3.2	

Habitat Associations

General: MARSHES AND SWAMPS.

Micro: COASTAL SALT MARSHES IN CLAY, SILT, AND SAND SUBSTRATES. 0-5M.

Occurrence No. 16 **Map Index:** 02332 **EO Index:** 48867

Occ Rank: Unknown
Origin: Natural/Native occurrence
Presence: Presumed Extant
Trend: Unknown

Dates Last Seen
Element: 1973-07-27
Site: 1973-07-27

Record Last Updated: 2002-10-01

Quad Summary: Seal Beach (3311861/072A)

County Summary: Orange

Lat/Long: 33.69803º / -118.04191º
UTM: Zone-11 N3729162 E403440
Mapping Precision: SPECIFIC
Symbol Type: POLYGON
Area: 1,121.5 acres

Township: 05S
Range: 11W
Section: XX **Qtr:** XX
Meridian: S
Elevation: 0 ft

Location: BOLSA CHICA STATE BEACH PARK, BOLSA BAY.

Location Detail: EXACT LOCATION UNKNOWN, BOLSA CHICA ECOLOGICAL RESERVE AND SURROUNDING AREA MAPPED FOR THIS SITE. MAPPED AT SAME LOCATION AS SALT MARSH.

Ecological:

Threat:

General: 1970 COLLECTION IN BOLSA BAY BY HENRICKSON (5029 RSA) ATTRIBUTED TO THIS SITE. ANAHEIM BAY SITES ATTRIBUTED TO THIS OCCURRECE. NEEDS FIELDWORK.

Owner/Manager: DPR-BOLSA CHICA SB

Suaeda esteroa

estuary seablite

Element Code: PDCHE0P0D0

Status	NDDB Element Ranks	Other Lists
Federal: None	**Global:** G4	**CNPS List:** 1B.2
State: None	**State:** S3.2	

Habitat Associations

General: MARSHES AND SWAMPS.

Micro: COASTAL SALT MARSHES IN CLAY, SILT, AND SAND SUBSTRATES. 0-5M.

Occurrence No. 17 **Map Index:** 34592 **EO Index:** 48871

Occ Rank: Unknown
Origin: Natural/Native occurrence
Presence: Presumed Extant
Trend: Unknown

Dates Last Seen
Element: 1904-09-06
Site: 1904-09-06

Record Last Updated: 2002-10-01

Quad Summary: San Pedro (3311863/073A), Torrance (3311873/090D)

County Summary: Los Angeles

Lat/Long: 33.73644º / -118.28092º
UTM: Zone-11 N3733670 E381341
Mapping Precision: NON-SPECIFIC
Symbol Type: POINT
Radius: 1 mile

Township: 05S
Range: 14W
Section: XX **Qtr:** XX
Meridian: S
Elevation: 60 ft

Location: SAN PEDRO.

Location Detail: EXACT LOCATION UNKNOWN, MAPPED BY CNDDB IN GENERAL VICINITY OF SAN PEDRO.

Ecological:

Threat: DEVELOPMENT.

General: SITE ALSO REPRESENTED BY CITATION IN REISER'S 'RARE PLANTS OF SAN DIEGO COUNTY' (2001). NEEDS FIELDWORK.

Owner/Manager: UNKNOWN

Suaeda esteroa

estuary seablite

Element Code: PDCHE0P0D0

Status	NDDB Element Ranks	Other Lists
Federal: None	**Global:** G4	**CNPS List:** 1B.2
State: None	**State:** S3.2	

Habitat Associations

General: MARSHES AND SWAMPS.

Micro: COASTAL SALT MARSHES IN CLAY, SILT, AND SAND SUBSTRATES. 0-5M.

Occurrence No. 18 **Map Index:** 27997 **EO Index:** 48872

Dates Last Seen

Element: 1900-07-12
Site: 1900-07-12

Occ Rank: Unknown
Origin: Natural/Native occurrence
Presence: Presumed Extant
Trend: Unknown

Record Last Updated: 2002-10-01

Quad Summary: Long Beach (3311872/089C)
County Summary: Los Angeles

Lat/Long: 33.77120º / -118.18868º
UTM: Zone-11 N3737422 E389931
Mapping Precision: NON-SPECIFIC
Symbol Type: POINT
Radius: 1 mile

Township: 05S
Range: 13W
Section: 01 **Qtr:** XX
Meridian: S
Elevation: 20 ft

Location: LONG BEACH.
Location Detail: EXACT LOCATION NOT KNOWN, MAPPED BY CNDDB IN GENERAL VICINITY OF LONG BEACH.
Ecological:
Threat:
General: "SAN PEDRO BAY" AS CITED IN REISER'S 'RARE PLANTS OF SAN DIEGO COUNTY' ATTRIBUTED TO THIS SITE (2001). NEEDS FIELDWORK.
Owner/Manager: UNKNOWN

Symphyotrichum defoliatum

San Bernardino aster

Element Code: PDASTE80C0

Status	NDDB Element Ranks	Other Lists
Federal: None	**Global:** G3	**CNPS List:** 1B.2
State: None	**State:** S3.2	

Habitat Associations

General: MEADOWS AND SEEPS, MARSHES AND SWAMPS, COASTAL SCRUB, CISMONTANE WOODLAND, LOWER MONTANE CONIFEROUS FOREST, GRASSLAND.

Micro: VERNALLY MESIC GRASSLAND OR NEAR DITCHES, STREAMS AND SPRINGS; DISTURBED AREAS. 2-2040M.

Occurrence No. 25 **Map Index:** 02270 **EO Index:** 60557

Occ Rank: None
Origin: Natural/Native occurrence
Presence: Possibly Extirpated
Trend: Unknown

Dates Last Seen
Element: 1933-09-08
Site: 1933-09-08

Record Last Updated: 2005-03-14

Quad Summary: Seal Beach (3311861/072A), Los Alamitos (3311871/089D)

County Summary: Orange

Lat/Long: 33.73881º / -118.07696º
UTM: Zone-11 N3733717 E400239
Mapping Precision: NON-SPECIFIC
Symbol Type: POINT
Radius: 1 mile

Township: 05S
Range: 12W
Section: 18 **Qtr:** NW
Meridian: S
Elevation: 3 ft

Location: ROADSIDE AT BACK OF LOMITA GUN CLUB, ANAHEIM MARSH.

Location Detail: CNDDB UNABLE TO LOCATE LOMITA GUN CLUB; MAPPED AS BEST GUESS AT ANAHEIM MARSH.

Ecological:

Threat:

General: 1933 BOOTH COLLECTION IS THE ONLY SOURCE FOR THIS SITE. PROBABLY EXTIRPATED ACCORDING TO A. SANDERS. NEEDS FIELDWORK.

Owner/Manager: UNKNOWN

Symphyotrichum defoliatum

San Bernardino aster

Element Code: PDASTE80C0

Status	NDDB Element Ranks	Other Lists
Federal: None	**Global:** G3	**CNPS List:** 1B.2
State: None	**State:** S3.2	

Habitat Associations

General: MEADOWS AND SEEPS, MARSHES AND SWAMPS, COASTAL SCRUB, CISMONTANE WOODLAND, LOWER MONTANE CONIFEROUS FOREST, GRASSLAND.

Micro: VERNALLY MESIC GRASSLAND OR NEAR DITCHES, STREAMS AND SPRINGS; DISTURBED AREAS. 2-2040M.

Occurrence No. 27 **Map Index:** 60532 **EO Index:** 60568

Occ Rank: None
Origin: Natural/Native occurrence
Presence: Possibly Extirpated
Trend: Unknown

Dates Last Seen
Element: 1932-09-16
Site: 1932-09-16
Record Last Updated: 2005-03-14

Quad Summary: Los Alamitos (3311871/089D)
County Summary: Los Angeles

Lat/Long: 33.77539º / -118.11888º
UTM: Zone-11 N3737814 E396399
Mapping Precision: NON-SPECIFIC
Symbol Type: POLYGON
Area:

Township: 05S
Range: 12W
Section: 03 **Qtr:** NE
Meridian: S
Elevation: 10 ft

Location: BRYANT RANCH, AT EXTREME SE CORNER OF PACIFIC WESTERN OIL LEASE, 100-150 FT WEST OF STATE HIGHWAY.

Location Detail: CNDDB UNABLE TO LOCATE BRYANT RANCH; MAPPED IN QUARTER SEC GIVEN IN SOURCE: NE 1/4 OF SECTION 3. THIS LATTER MAY BE AN INTERPRETATION BY RSA.

Ecological: LOW MARSHY GROUND.

Threat:

General: 1932 WOLF COLLECTION IS THE ONLY SOURCE FOR THIS SITE. PROBABLY EXTRIPATED DUE TO URBANIZATION ACCORDING TO A. SANDERS. NEEDS FIELDWORK.

Owner/Manager: UNKNOWN

Symphyotrichum defoliatum

San Bernardino aster

Element Code: PDASTE80C0

Status	NDDB Element Ranks	Other Lists
Federal: None	**Global:** G3	**CNPS List:** 1B.2
State: None	**State:** S3.2	

Habitat Associations

General: MEADOWS AND SEEPS, MARSHES AND SWAMPS, COASTAL SCRUB, CISMONTANE WOODLAND, LOWER MONTANE CONIFEROUS FOREST, GRASSLAND.

Micro: VERNALLY MESIC GRASSLAND OR NEAR DITCHES, STREAMS AND SPRINGS; DISTURBED AREAS. 2-2040M.

Occurrence No. 28 **Map Index:** 23783 **EO Index:** 60571

Occ Rank: None
Origin: Natural/Native occurrence
Presence: Possibly Extirpated
Trend: Unknown

Dates Last Seen
Element: 1930-XX-XX
Site: 1930-XX-XX

Record Last Updated: 2005-03-14

Quad Summary: Inglewood (3311883/090A)
County Summary: Los Angeles

Lat/Long: 33.88942º / -118.31857º
UTM: Zone-11 N3750677 E378070
Mapping Precision: NON-SPECIFIC
Symbol Type: POINT
Radius: 1 mile

Township: 03S
Range: 14W
Section: XX **Qtr:** XX
Meridian: S
Elevation: 50 ft

Location: GARDENA, SLOUGH ON W SIDE OF DOMINGUEZ HILLS (NO LONGER PRESENT).
Location Detail: SLOUGH WAS PART OF HISTORICAL WATERSHED OF LOS ANGELES RIVER, NOW LONG GONE.
Ecological:
Threat:
General: PROBABLY EXTIRPATED DUE TO URBANIZATION ACCORDING TO A. SANDERS. NEEDS FIELDWORK.
Owner/Manager: UNKNOWN

Taxidea taxus

American badger

Element Code: AMAJF04010

Status	NDDB Element Ranks	Other Lists
Federal: None	**Global:** G5	**CDFG Status:** SC
State: None	**State:** S4	

Habitat Associations

General: MOST ABUNDANT IN DRIER OPEN STAGES OF MOST SHRUB, FOREST, AND HERBACEOUS HABITATS, WITH FRIABLE SOILS.

Micro: NEED SUFFICIENT FOOD, FRIABLE SOILS & OPEN, UNCULTIVATED GROUND. PREY ON BURROWING RODENTS. DIG BURROWS.

Occurrence No. 291 **Map Index:** 51258 **EO Index:** 57504

Occ Rank: Unknown
Origin: Natural/Native occurrence
Presence: Presumed Extant
Trend: Unknown

Dates Last Seen
Element: XXXX-XX-XX
Site: XXXX-XX-XX

Record Last Updated: 2005-01-05

Quad Summary: Inglewood (3311883/090A), South Gate (3311882/089B), Los Angeles (3411812/110C), Hollywood (3411813/111D), Pasadena (3411822/110B), Burbank (3411823/111A)

County Summary: Los Angeles

Lat/Long: 34.05366º / -118.24549º
UTM: Zone-11 N3768805 E385050
Mapping Precision: NON-SPECIFIC
Symbol Type: POINT
Radius: 5 mile

Township: 01S
Range: 13W
Section: 28 **Qtr:** XX
Meridian: S
Elevation: 280 ft

Location: LOS ANGELES.
Location Detail: NO OTHER LOCATION INFORMATION GIVEN.
Ecological:
Threat:
General: 1 COLLECTED, LACM.
Owner/Manager: UNKNOWN

Trigonoscuta dorothea dorothea

Dorothy's El Segundo Dune weevil

Element Code: IICOL51021

Status	NDDB Element Ranks	Other Lists
Federal: None	**Global:** G1T1	**CDFG Status:**
State: None	**State:** S1	

Habitat Associations

General: COASTAL SAND DUNES IN LOS ANGELES COUNTY.

Micro:

Occurrence No. 3 **Map Index:** 20586 **EO Index:** 34790

Occ Rank: Unknown
Origin: Natural/Native occurrence
Presence: Presumed Extant
Trend: Unknown

Dates Last Seen
Element: 1989-06-XX
Site: 1989-06-XX

Record Last Updated: 1998-09-23

Quad Summary: Seal Beach (3311861/072A)

County Summary: Orange

Lat/Long: 33.70090º / -118.04679º
UTM: Zone-11 N3729485 E402991
Mapping Precision: SPECIFIC
Symbol Type: POLYGON
Area: 16.5 acres

Township: 05S
Range: 11W
Section: 29 **Qtr:** XX
Meridian: S
Elevation: 40 ft

Location: RABBIT ISLAND, IN BOLSA CHICA ECOLOGICAL RESERVE.

Location Detail:

Ecological: MOSAIC OF PLANT COMMUNITIES & SAND. VEG INCLUDES BACCHARIS, ATRIPLEX, MONANTHOCHLOE LITTORALIS, ELYMUS TRITICOIDES, HAPLOPAPPUS SP, HETEROTHECA GRANDIFLORA, JUNCUS ACUTUS, LOTUS SCIPARIUS, CARPOBROTUS EDULIS, OENOTHERA, ABRONIA & ICE PLANT.

Threat:

General: AREA RESTRICTED FROM PUBLIC ACCESS & IN RECENT YEARS HAS REMAINED RELATIVELY UNDISTURBED. THE WEEVIL WAS COLLECTED IN HEAVY NUMBERS IN PIT-FALL TRAPS FROM 12/88 TO 3/89, FEWER NUMBERS COLLECTED UNTIL JUNE 1989.

Owner/Manager: DFG-BOLSA CHICA ER

Trigonoscuta dorothea dorothea

Dorothy's El Segundo Dune weevil

Element Code: IICOL51021

Status	NDDB Element Ranks	Other Lists
Federal: None	**Global:** G1T1	**CDFG Status:**
State: None	**State:** S1	

Habitat Associations

General: COASTAL SAND DUNES IN LOS ANGELES COUNTY.

Micro:

Occurrence No. 4 **Map Index:** 39897 **EO Index:** 34899

Occ Rank: Unknown
Origin: Natural/Native occurrence
Presence: Presumed Extant
Trend: Unknown

Dates Last Seen
Element: 1989-06-XX
Site: 1989-06-XX
Record Last Updated: 1998-10-05

Quad Summary: Seal Beach (3311861/072A)
County Summary: Orange

Lat/Long: 33.69119º / -118.04274º
UTM: Zone-11 N3728404 E403356
Mapping Precision: SPECIFIC
Symbol Type: POLYGON
Area: 4.1 acres

Township: 05S
Range: 11W
Section: 33 **Qtr:** XX
Meridian: S
Elevation: 5 ft

Location: NARROW STRIP OF DUNES SOUTH OF THE PARKING LOT ENTRANCE. BOLSA CHICA ECOLOGICAL RESERVE.

Location Detail:

Ecological: DUNE HABITAT, NO TRAILS IN THIS AREA & RELATIVELY LITTLE PEDESTRIAN TRAFFIC. EXPOSED TO OPEN, WINDY CONDITIONS.

Threat:

General: UNKNOWN NUMBERS COLLECTED IN PITFALL TRAPS JANUARY TO JUNE 1989.

Owner/Manager: DFG-BOLSA CHICA ER

Tryonia imitator

mimic tryonia (=California brackishwater snail) **Element Code:** IMGASJ7040

Status	NDDB Element Ranks	Other Lists
Federal: None	**Global:** G2G3	**CDFG Status:**
State: None	**State:** S2S3	

Habitat Associations

General: INHABITS COASTAL LAGOONS, ESTUARIES AND SALT MARSHES, FROM SONOMA COUNTY SOUTH TO SAN DIEGO COUNTY.

Micro: FOUND ONLY IN PERMANENTLY SUBMERGED AREAS IN A VARIETY OF SEDIMENT TYPES; ABLE TO WITHSTAND A WIDE RANGE OF SALINITIES.

Occurrence No. 12 **Map Index:** 02332 **EO Index:** 23213

Occ Rank: Unknown
Origin: Natural/Native occurrence
Presence: Presumed Extant
Trend: Unknown

Dates Last Seen
Element: 1968-XX-XX
Site: 1968-XX-XX
Record Last Updated: 1998-11-25

Quad Summary: Seal Beach (3311861/072A)
County Summary: Orange

Lat/Long: 33.69803º / -118.04191º
UTM: Zone-11 N3729162 E403440
Mapping Precision: SPECIFIC
Symbol Type: POLYGON
Area: 1,121.5 acres

Township: 05S
Range: 11W
Section: XX **Qtr:** XX
Meridian: S
Elevation: 0 ft

Location: BOLSA CHICA SLOUGH, BOLSA CHICA STATE BEACH.
Location Detail:
Ecological: THIS SPECIES IS FOUND IN BRACKISH COASTAL LAGOONS AND ESTUARIES.
Threat: SUCH HABITAT IS BEING ELIMINATED BY DEVELOPMENT AND MODIFICATION.
General: STATUS UNCERTAIN; RECORD BASED UPON EMPTY SHELLS, WITH NO SUBSEQUENT COLLECTIONS. LACM #10571.
Owner/Manager: DPR-BOLSA CHICA SB

Table 5.6-1 (Revised)

Special-Status Species with Low Potential to Occur in the Project Area

Table 5.6-1 (Revised)
Special-Status Species with Low Potential to Occur in the Project Area

Common Name	Scientific Name	Status[1] Federal/State/Other	Occurrence within 10 miles	Preferred Habitat	Likelihood of Occurrence in Project Area
PLANTS					
Aphanisma	*Aphanisma blitoides*	1B.2	Last seen in 1987 nine miles west of the Project Site.	Found in coastal dunes, bluffs and sandy scrub habitat. Blooms March thru June. Occurs from 1 to 600 feet in elevation.	Potential is low to none for this species to occur within the project area.
Ventura Marsh milk-vetch	*Atrasgalus pycnostachyus var. lanosissimus*	FE/SE/1B.1	Last seen in 1882 more than 10 miles north of the Project Site.	Found in coastal dunes, bluffs, marshes, swamps and coastal salt marshes. Blooms June thru October. Occurs from 1 to 120 feet in elevation..	Potential is low to none for this species to occur within the project area.
Coastal dunes milk-vetch	*Astragalus tener var. titi*	FE/SE/1B.1	Last seen in 1903 nine miles north of the Project Site.	Found in coastal dunes, bluffs and prairies habitat. Blooms from March thru May. Occurs from 1 to 150 feet in elevation	Potential is low to none for this species to occur within the project area
South Coast saltscale	*Atriplex pacifica*	1B.2	Last seen in 1903 nine miles west of the Project Site along the coast.	Found in Coastal bluff scrub, Coastal dunes Coastal scrub and Playas. Blooms March thru October. Occurs from 1 to 420 feet.	Potential is low to none for this species to occur within the project area
Parish's brittlescale	*Atiplex parishii*	1B.1	Date last seen unknown, over 4 miles east of Project Site, approximately 1 mile east of 710 freeway in Bixby.	Found in alkali meadows, vernal pools, chenopod scrub, playas usually with fine soils from 3 to 420 feet in elevation.	Potential is low to none for this species to occur within the Project area.
Davidson's saltscale	*Atriplex serenana var. davidsonii*	1B.2	Last seen in 1906 eight miles southeast of the Project Site.	Found in Coastal bluff and Coastal Scrub habitat. Blooms from April thru October. Occurs from 30 to 600 feet in elevation.	Potential is low to none for this species to occur within the project area
Santa Barbara morning-glory	*Calystegia sepium ssp. australis*	1A	Last seen 1932 more than 10 miles from the Project Site to the north.	Found in marsh and swamp habitat. Blooms from April thru May. Occurs from 0 to 60 feet in elevation.	Potential is low to none for this species to occur within the project area

Table 5.6-1 (Revised)
Special-Status Species with Low Potential to Occur in the Project Area

Common Name	Scientific Name	Status[1] Federal/State/Other	Occurrence within 10 miles	Preferred Habitat	Likelihood of Occurrence in Project Area
Southern tarplant	*Centromadia parryi* ssp. *australis*	1B.1	Last seen in 2001 at Harbor Lake Regional Park and Naval Defense Fuel Support Point, 4.5 miles southwest of the Project Site.	Found in marshes and swamp margins, valley and foothill grasslands from 0 to 1,281 feet in elevation.	Potential is low to none for this species to occur within the Project area.
Orcutt's pincushion	*Chaenactis glabriuscula var. orcuttiana*	1B.1	Last seen 1929 more than 10 miles from the Project Site to the northwest.	Found in Coastal bluff and dune habitat. Blooms from January to August. Occurs from 9 to 30 feet in elevation.	Potential is low to none for this species to occur within the Project area.
Saltmarsh bird's beak	*Cordylanthus martimus* ssp. *maritimus*	FE/SE/1B.2	Last seen in 1980 on Terminal Island, San Pedro Harbor 3.5 miles south of the Project Site.	Found in coastal marshes and coastal dunes from 0 to 900 feet in elevation.	Potential is low to none for this species to occur within the Project area.
Catalina crossosoma	*Crossosoma californicum*	1B.2	Last seen 1996 over ten miles away from the Project Site.	Found in chaparral and coastal scrub. Blooms February to May. Occurs from 0 to 1500 feet in elevation.	Potential is low to none for this species to occur within the Project area.
Beach spectaclepod	*Dithyrea maritime*	ST/1B.1	Last seen 1902 over ten miles away from the Project Site.	Found in coastal dunes and scrub habitat. Blooms March thru May. Occurs from 10 to 150 feet in elevation.	Potential is low to none for this species to occur within the Project area.
Island green dudleya	*Dudleya virens ssp. insularis*	1B.2	Last seen 1992 nine miles southwest of the Project Site.	Found in coastal scrub and coastal bluff scrub. Blooms April thru June. Occurs from 15 to 900 feet in elevation.	Potential is low to none for this species to occur within the Project area.
Coulter's goldfields	*Lasthenia glabrata ssp. coulteri*	1B.1	Last seen 1949 nine miles northeast of the Project Site.	Found in marsh, swamp, playas, and vernal pool habitats. Blooms February to June. Occurs from 1 to 3600 feet in elevation	Potential is low to none for this species to occur within the Project area.

Table 5.6-1 (Revised)
Special-Status Species with Low Potential to Occur in the Project Area

Common Name	Scientific Name	Status[1] Federal/State/Other	Occurrence within 10 miles	Preferred Habitat	Likelihood of Occurrence in Project Area
Santa Catalina Island desert-thorn	*Lycium brevipes var. hassei*	1B.1	Last seen in 1992 nine miles away to the northwest of the Project Site.	Found in coastal bluff and coastal scrub habitat. Blooms in June. Found from 30 to 900 feet in elevation.	Potential is low to none for this species to occur within the Project area.
Mud nama	*Nama stenocarpum*	2.2	Last seen in 1932 more than ten miles away from the Project Site.	Found in marshes and swamp habitat. Blooms January thru July. Occurs from 15 to 1500 feet in elevation.	Potential is low to none for this species to occur within the Project area.
Gambel's water cress	*Nasturtium gambellii*	FE/ST/1B.1	Last seen in 1908 more than ten miles away from the Project Site.	Found in marshes and swamp habitat. Blooms April thru October. Occurs from 15 to 1600 feet in elevation.	Potential is low to none for this species to occur within the Project area.
Moran's navarretia	*Navarretia fossalis*	FT/-/1B.1	Last seen 1906 more than ten miles away from the Project Site	Found in Chenopod scrub, marshes, swamps and vernal pool habitat. Blooms April thru June. Occurs from 90 to 4000 feet in elevation.	Potential is low to none for this species to occur within the Project area.
Prostrate vernal pool navarretia	*Navarretia prostrata*	1B.1	Last seen in 1882 approximately 0.75 mile southeast of the Project Site in an unknown location.	Found in coastal scrub, valley and foothill grasslands, and vernal pools generally with mesic, alkaline soils from 45 to 2,100 feet in elevation.	Potential is low to none for this species to occur within the Project area.
Coast woolly-heads	*Nemacaulis enudate* var. *denudata*	1B.2	Last documented in the area in 1905 3 miles southwest of the Project Site.	Found in coastal dunes from 0 to 300 feet in elevation.	Potential is low to none for this species to occur within the Project area.
California Orcutt grass	*Orcuttia californica*	FE/SE/1B.1	Last documented in 1946 seven miles east of the project site.	Found in vernal pool habitat. Blooms April to August. Occurs from 45 to 2000 feet in elevation.	Potential is low to none for this species to occur within the Project area.
Lyon's pentachaeta	*Pentachaeta lyonii*	FE/SE/1B.1	Last documented 1889 in the area of San Pedro 5 miles from the Project Site.	Found in chaparral and valley/foothill grasslands typically along ecotones or edges between the two habitat types from 90 to 1,890 feet in elevation.	Potential is low to none for this species to occur within the Project area.

Table 5.6-1 (Revised)
Special-Status Species with Low Potential to Occur in the Project Area

Common Name	Scientific Name	Status[1] Federal/State/Other	Occurrence within 10 miles	Preferred Habitat	Likelihood of Occurrence in Project Area
Brand's start phacelia	*Phacelia stellaris*	Federal Candidate/-/ 1B.1	Last documented in 1909 nine miles north of the Project Site	Found in coastal dunes and coastal scrub. Blooms from March to June from 1 to 1200 feet in elevation.	Potential is low to none for this species to occur within the Project area.
Sanford's arrowhead	*Sagittaria sandfordii*	1B.2	Last documented in 1975 more than ten miles away from the Project Site	Found in marshes and swamp habitat. Blooms from May to October. Occurs from 0 to 2000 feet in elevation.	Potential is low to none for this species to occur within the Project area.
Salt spring checkerbloom	*Sidalcea neomexicana*	2.2	Last documented in 1936 eight miles southeast of the Project Site.	Found in chaparral, coastal scrub, lower montane coniferous forest, mojavean desert scrub, and playas /alkaline, mesic habitats. Blooms from March thru June. Occurs from 45 to 5000 feet in elevation.	Potential is low to none for this species to occur within the Project area.
Estuary seablite	*Suaeda esteroa*	1B.2	Last documented in 1904 in the San Pedro area 5 miles from the Project Site.	Found in marshes and swamps, generally coastal salt marshes in clay, silt, and sand substrates from 0 to 15 feet in elevation.	Potential is low to none for this species to occur within the Project area.
San Bernadino aster	*Symphyotrichum defoliatum*	1B.2	Last documented in 1933 nine miles from the Project Site.	Found in cismontane woodland, coastal scrub, lower montane coniferous forest, meadows and seeps, marshes and swamps, valley and foothill grassland (vernally mesic)/near ditches, streams, springs. Blooms from July thru November. Occurs from 6 to 6120 feet in elevation.	Potential is low to none for this species to occur within the Project area.
WILDLIFE					
Birds					

Table 5.6-1 (Revised)
Special-Status Species with Low Potential to Occur in the Project Area

Common Name	Scientific Name	Status[1] Federal/State/Other	Occurrence within 10 miles	Preferred Habitat	Likelihood of Occurrence in Project Area
California least tern	*Sternula antillarum browni*	FE/SE	Nesting site last documented on Terminal Island landfill in 1996 approximately 5 miles from the Project Site.	Nest sites found on bare or sparsely vegetated, flat substrates, sand beaches, alkali flats, landfills, or paved areas.	Potential is low to none potential for this species to occur within the Project area.
Coastal California gnatcatcher	*Polioptila california californica*	FT/SC	Multiple documented sightings in 2006 outside the 5 mile range and one occurrence in 2005 approximately 5 miles southwest of the Project Site.	Found in coastal sage scrub below 2,500 feet in elevation in Southern California. It inhabits low, coastal sage scrub in arid washes, on mesas and slopes.	Potential is low to none for this species to occur within the Project area.
California brown pelican	*Pelecanus occidentalis californicus*	FE/SE	Colony documented in 2000 on the eastern and middle Long Beach Harbor breakwaters over 5 miles from the Project Site.	Nests found on small to moderately sized islands that afford protection from attack by ground predators.	Potential is low to none for this species to occur within the Project area.
Tricolored blackbird	*Agelaius tricolor*	SC	Last documented in 1980s 4 miles southwest of the Project Site.	Breeds near open water with protected nesting substrate, and foraging area with insect prey nearby the colony. Foraging habitats in all seasons include pastures, dry seasonal pools, and agricultural fields.	Potential is low to none for this species to occur within the Project area.

Table 5.6-1 (Revised)
Special-Status Species with Low Potential to Occur in the Project Area

Common Name	Scientific Name	Status[1] Federal/State/Other	Occurrence within 10 miles	Preferred Habitat	Likelihood of Occurrence in Project Area
Western snowy plover	*Charadrius alexandrinus nivosus*	FT/SC	Last documented in 1971 in Sunset Park, Huntington Beach, over 7 miles away to the southeast of the Project Site.	Occurs and breeds on sandy beaches, saltpond levees, and shores of large alkali lakes. It requires sandy, gravelly, or friable soils for nesting on the mainland coast, peninsulas, offshore islands, adjacent bays, estuaries, and coastal rivers.	Potential is low to none for this species to occur within the Project area.
Burrowing owl	*Athene cunicularia*	SC	Observed in refinery's 503 Reservoir approx ¼ mile southwest of the Project Site. One burrowing owl found injured at the Cogen facility in 2006 (Sauer pers. comm., 2008).	Occurs in open, dry grassland and desert habitats.	May pass through Project area. No suitable nesting or denning sites observed. Not likely to use Project area for nesting (protected activity).
Ferruginous hawk	*Buteo regalis*	None	Last documented in 1997 ten miles east of the Project Site.	Frequents open grasslands, sagebrush flats, desert scrub, low foothills surrounding valleys, and fringes of pinyon-juniper habitats. Largely winter resident in California.	May pass through Project Area .No suitable nesting or foraging sites observed.
Western yellow-billed cuckoo	*Coccyzus americanus occidentalis*	Federal Candidate/ SE	Last documented in 1912 more than 10 miles away from the Project Site.	An uncommon to rare summer resident of valley foothill and desert riparian habitats in scattered locations in California in densely foliaged, deciduous trees and shrubs, especially willows.	Potential is low to none for this species to occur within the Project area due to the limited population numbers and specific habitat requirements.

Table 5.6-1 (Revised)
Special-Status Species with Low Potential to Occur in the Project Area

Common Name	Scientific Name	Status[1] Federal/State/Other	Occurrence within 10 miles	Preferred Habitat	Likelihood of Occurrence in Project Area
Southwestern willow flycatcher	*Empidonax trailii extimus*	FE/SE	Last documented more than 10 miles away from the Project Site	A rare to locally uncommon, summer resident in wet meadow and montane riparian habitats in the Sierra Nevada and Cascade Range. Most often occurs in broad, open river valleys or large mountain meadows with lush growth of shrubby willows This subspecies has been observed breeding along the Santa Ynez river in Santa Barbara Co., and along the Santa Clara river in Ventura Co. (J. Greaves pers. comm). Common spring (mid-May to early June) and fall (mid-August to early September) migrant at lower elevations, primarily in riparian habitats throughout the state.	Potential is low to none for this species to occur within the Project area due to the limited population numbers and specific habitat requirements.
Belding's savannah sparrow	*Passerculus sandwichensis beldingi*	SE	Last documented more than 10 miles away from the Project Site.	Found mostly in grasslands, wet meadows, salicornia wetlands, and by associated scattered shrubs and rocks. Requires dense ground cover in breeding season. lives year-round in scattered southern coastal wetlands.	Potential is low to none for this species to occur within the Project area due to specific habitat requirements.
Light-footed clapper rail	*Rallus longirostris levipes*	FE/ SE	Last documented more than 10 miles from the Project Site	Found in coastal saline emergent wetlands along southern California from Santa Barbara Co. to San Diego Co. Forages in higher marsh vegetation, along vegetation and mudflat interface, and along tidal creeks. Gleans, pecks, probes, and scavenges from surface.	Potential is low to none for this species to occur within the Project area due to specific habitat requirements

Table 5.6-1 (Revised)
Special-Status Species with Low Potential to Occur in the Project Area

Common Name	Scientific Name	Status[1] Federal/State/Other	Occurrence within 10 miles	Preferred Habitat	Likelihood of Occurrence in Project Area
Black Skimmer	*Rynchops niger*	SSC	Last documented more than 10 miles away from the project site.	Found in coastal estuaries and river mouths of southern California. Nests primarily on gravel bars, low islets and sandy beaches in unvegetated sites	Potential is low to none for this species to occur within the Project area due to specific habitat requirements
Reptiles and Amphibians					
Southwestern pond turtle	*Actinemys marmorata pallida*	SC	Last documented more than 10 miles away from the Project Site.	Found in permanent and intermittent aquatic habitats primarily in freshwater.	Potential is low to none for this species to occur within the project area
Coast (San Diego) horned lizard	*Phrynosoma coronatum (blainvilli population)*	SC	Last documented in 1957 3 miles north of Long Beach State University, 3 miles southeast of the Project Site.	Found in coastal sage scrub and chaparral in arid and semiarid climate conditions. It prefers friable, rocky, or shallow sandy soils.	Potential is low to none for this species to occur within the Project area.
Western spadefoot	*Spea hammondii*	SC	Last documented in 1998 more than 10 miles from the project site.	Found primarily in grasslands, but occasional populations also occur in valley-foothill hardwood woodlands.	Potential is low to none for this species to occur within the Project area due to specific habitat requirements
Mammals					
Pacific pocket mouse	*Perognathus longimembris pacificus*	FE/SC	Last documented in 1931 in Clifton, east of Redondo State Beach, over 7 miles away from the Project Site.	Historically found along the narrow coastal plains with fine-grained, sandy substrates in open coastal sage scrub, coastal strand, coastal dune, and river alluvium.	Potential is low to none for this species to occur within the Project area.
South coast marsh vole	*Microtus californicus stephansi*	SC	Last documented in 1988 10 miles away to the southwest.	Found in fresh emergent wetland, cropland, grassland, and wet meadow habitats.	Potential is low to none for this species to occur within the Project area.

Table 5.6-1 (Revised)
Special-Status Species with Low Potential to Occur in the Project Area

Common Name	Scientific Name	Status[1] Federal/State/Other	Occurrence within 10 miles	Preferred Habitat	Likelihood of Occurrence in Project Area
Southern California saltmarsh shrew	*Sorex ornatus salicornicus*	SC	Last documented 10 miles away from the Project Site	Found in fresh emergent wetland, cropland, grassland, and wet meadow habitats.	Potential is low to none for this species to occur within the Project area.
San Diego dessert woodrat	*Neotoma lepida intermedia*	SC	Last documented in 1991 nine miles southwest of the Project Site.	found abundant in Joshua tree, pinyon-juniper, mixed and chamise-redshank chaparral, sagebrush, and most desert habitats. Also found in a variety of other habitats.	Potential is low for this species to occur within the Project area.
American badger	*Taxidea taxus*	SC	Last documented more than 10 miles away from the Project Site	Found in a variety of habitats, including grasslands, savannas, mountain meadows, coastal sage scrub, and riparian scrub. A common feature of these habitats is friable soils	Potential is low for this species to occur within the Project area
Big free-tailed bat	*Nyctinomops macrotis*	SC	Last documented in 1983 three miles north of the Project Site	Found rarely in California. Prefer rugged rocky terrain.	Potential is low for this species to occur within the Project area.
Pocketed free-tailed bat	*Nyctinomops femorosaccus*	SC	Last seen near Harbor City in 1985, 4 miles west of the Project Site.	Found in arid areas in Southern California; pine-juniper woodlands, desert scrub, palm oasis, desert wash, and desert riparian habitats typically with rocky areas and high cliffs. Occasionally human-made structures.	Potential is low for this species to occur within the Project area.

Table 5.6-1 (Revised)
Special-Status Species with Low Potential to Occur in the Project Area

Common Name	Scientific Name	Status[1] Federal/State/Other	Occurrence within 10 miles	Preferred Habitat	Likelihood of Occurrence in Project Area
Silver-haired bat	*Lasionycteris noctivagans*	IUCN:LC WBWG:M	Last documented in 1986 west of the intersection of 20th Street and Maine Avenue, Long Beach.	Found along coastal and montane forests and feeds over streams, ponds, and open brushy areas. It roosts in hollow trees, beneath exfoliating bark, abandoned woodpecker holes, and rarely under rocks. It requires drinking water in close vicinity. Hibernates in hollow trees, under sloughing bark, in rock crevices, and occasionally under wood piles, in leaf litter, under foundations, and in buildings, mines, and caves.	Potential is low for this species to occur within the Project area.
Western mastiff bat	*Eumops perotis californicus*	SC	Last documented over ten miles away from the Project Site.	Found primarily roosting in crevices in vertical cliffs, usually granite or consolidated sandstone, and in broken terrain with exposed rock faces; they may also be found occasionally in high buildings, trees and tunnels. Due to its large size, this bat needs vertical faces to drop from in order to take flight.	Potential is low for the species to occur within the Project area.
Western yellow bat	*Laiurus xanthinus*	No listing	Last documented in 1990 over 10 miles away from the Project Site.	Found and known only in Los Angeles and San Bernardino Cos. south to the Mexican border. This species frequents valley foothill riparian, desert riparian, desert wash, and palm oasis habitats.	Potential is low to none for this species to occur within the Project area.

Table 5.6-1 (Revised)
Special-Status Species with Low Potential to Occur in the Project Area

Common Name	Scientific Name	Status[1] Federal/State/Other	Occurrence within 10 miles	Preferred Habitat	Likelihood of Occurrence in Project Area
Invertebrates					
Western beach tiger beetle	*Cicindela latesignata latesignata*	No listing	Last documented in an unknown year along the Long Beach shoreline approximately 2 miles from the Project Site.	Found along mudflats and beaches in coastal Southern California.	Potential is low to none for this species to occur within the Project area.
Western tidal-flat tiger beetle	*Cicindela gabbii*	No listing	Last documented in 1998 in the Seal Beach area over 5 miles from the Project Site.	Inhabits estuaries and mudflats along the coast of Southern California in the dark-colored mud zone and occasionally dry saline flats of estuaries.	Potential is low to none for this species to occur within the Project area.
Sandy beach tiger beetle	*Cicindela hirticollis gravida*	No listing	Last documented in 1979 at Terminal Island over 4.5 miles from the Project Site.	Inhabits areas adjacent to non-brackish water along the coast of California from San Francisco Bay to northern Mexico in clean, dry, light-colored sand in the upper zone. Subterranean larvae prefer moist sand not affected by wave action.	Potential is low to none for this species to occur within the Project area.
Senile tiger beetle	*Cicindela senilis frosti*	No listing	Last documented in 1979 nine miles away from the project site.	Inhabits areas adjacent to non-brackish water along the coast in dry, light-colored sand in the upper zone.	Potential is low to none for this species to occur within the Project area.
Monarch butterfly	*Danaus plexippus*	No listing	Last documented six miles east of the project site.	Over winters in California in dense wind protected groves of trees with water and nectar nearby	Potential is low to none for this species to occur within the Project area.
El Segundo blue butterfly	*Euphilotes perotis californicus*	FE	Last documented eight miles southwest of the Project Site.	Named for the dune system that it inhabits. One of the last populations lives adjacent to the Los Angeles International Airport.	Potential is low to none for this species to occur within the Project area.

Table 5.6-1 (Revised)
Special-Status Species with Low Potential to Occur in the Project Area

Common Name	Scientific Name	Status[1] Federal/State/Other	Occurrence within 10 miles	Preferred Habitat	Likelihood of Occurrence in Project Area
Palos Verdes blue butterfly	*Glaucopsyche lygdamus palosverdesensis*	FE/SE	Last documented eight miles southwest of the Project Site.	known from only three locations on the Palos Verdes Peninsula, a shrinking patch of coastal scrub community on the coast south of Los Angeles.	Potential is low to none for this species to occur within the Project area

Table 5.6-1
Special-Status Species with Low Potential to Occur in the Project Area

Notes:
Based on lists generated by the USFWS, CNDDB, CNPS Database, and species known to occur in Los Angeles and Orange County, 2008.
U.S. Fish and Wildlife Service (Federal)
BLM = Bureau of Land Management Sensitive Species
FE = Endangered (In danger of becoming extinct throughout all or a significant portion of its range.)
FC = Federal Candidate (Candidate for FT or FE listing.)
FSC = Species of Concern (Sufficient information exists that warrants concern over that species' status and warrants study.)
FT = Threatened (Likely to become endangered in the foreseeable future in the absence of special protection.)
California Department of Fish and Game (State)
CSC = Species of Concern (Information exists that warrants concern over that species' status and warrants study.)
SE = Endangered (In danger of becoming extant throughout all or a significant portion of its range.)
SC = State Candidate (Candidate for SE or State Threatened [likely to become endangered in the foreseeable future in the absence of special protection.])
California Native Plant Society (CNPS)
CNPS 1B = plants that are rare, threatened, or endangered in California and elsewhere
The World Conservation (IUCN)
LC: Least Concern; widespread and abundant but lacking information on breeding populations
Western Bat Working Group (WBWG)
M: Medium Priority; needing more work to determine the distribution of breeding populations

Table B-1

Important Commercial Recreational Fisheries within Ten Miles of the Watson Cogeneration Facility

Table B-1
Important Commercial Recreational Fisheries within Ten Miles of the Watson Cogeneration Facility

Ocean Fish	
Cabazon	*Scorpaenichthys marmoratus*
California sheephead	*Semicossyphus pulcher*
black rockfish	*Sebastes melanops*
black-and-yellow rockfish	*Sebastes chrysomelas*
blue rockfish	*Sebastes mystinus*
brown rockfish	*Sebastes auriculatus*
calico rockfish	*Sebastes dalli*
China rockfish	*Sebastes nebulosus*
copper rockfish	*Sebastes caurinus*
gopher rockfish	*Sebastes carnatus*
grass rockfish	*Sebastes rastrelliger*
kelp rockfish	*Sebastes atrovirens*
olive rockfish	*Sebastes serranoides*
quillback rockfish	*Sebastes maliger*
treefish	*Sebastes serriceps*
kelp and rock greenlings	*Hexagrammos* spp.
lingcod	*Ophiodon elongatus*
California scorpionfish	*Scorpaena guttata*
leopard shark	*Triakis semifasciata*
soupfin shark	*Galeorhinus zyopterus*
spiny dogfish	*Squalus acanthias*
white sharks	*Carcharodon carcharias*
sixgill shark	*Hexanchus griseus*
sevengill shark	*Notorynchus cepedianus*
shortfin mako shark	*Isurus oxyrinchus*
thresher shark	*Alopias vulpinus*
blue shark	*Prionace glauca*
Pacific sanddab	*Citharichthys sordidus*
butter sole	*Isopsetta isolepis*
curlfin sole	*Pleuronichthys decurrens*
flathead sole	*Hippoglossoides elassodon*
rex sole	*Glyptocephalus zachirus*
rock sole	*Lepidopsetta bilineata*
sand sole	*Psettichthys melanostictus*
California halibut	*Paralichthys californicus*
white seabass	*Atractoscion nobilis*
surfperch	family Embiotocidae
Shiner perch	*Cymatogaster aggregata*
Redtail surfperch	*Amphistichus rhodoterus*
giant sea bass	*Stereolepis gigas*
California grunion	*Leuresthes tenuis*
Shell Fish	
abalone	*Haliotis* sp
spiny lobster	*Panulirus interruptus*

Figure B-1

Project Site and Survey Area

Notes:
Aerial photo basemap from AirPhotoUSA, 2006.
City boundaries from Los Angeles County, 2008.
Sensitive Element Occurences from CA
Natural Diversity Database (July 1, 2008)

PROJECT SITE AND SURVEY AREA
WATSON COGENERATION
STEAM AND ELECTRIC RELIABILITY PROJECT

URS

500 250 0 500 Feet
SCALE: 1:6,000

CREATED BY: DENVER GIS | DATE: 06/23/09
PROJ. MAN.: DH | PROJ. NO.: 22239068

FIGURE: **B-1**

Path: Y:\GIS\Projects\BP_Carson_Cogen\mxds\figB1_SurveyArea

Appendix C
Land Use

Figure C-1

Planned Land Use

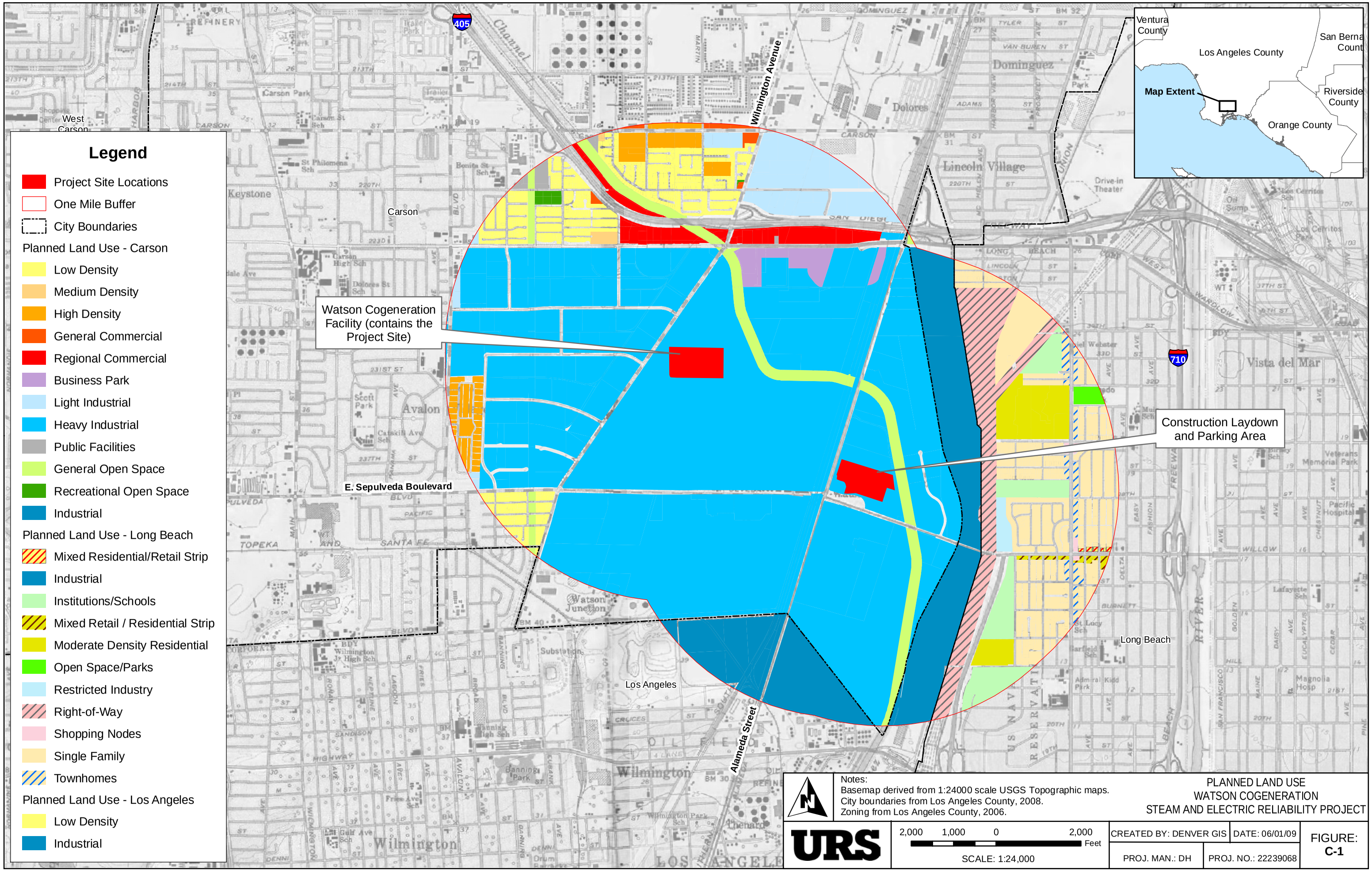

Path: Y:\GIS\Projects\BP_Carson_Cogen\mxds\figC1_PlannedLU.mxd

Figure 5.9-3 (Revised)

Zoning

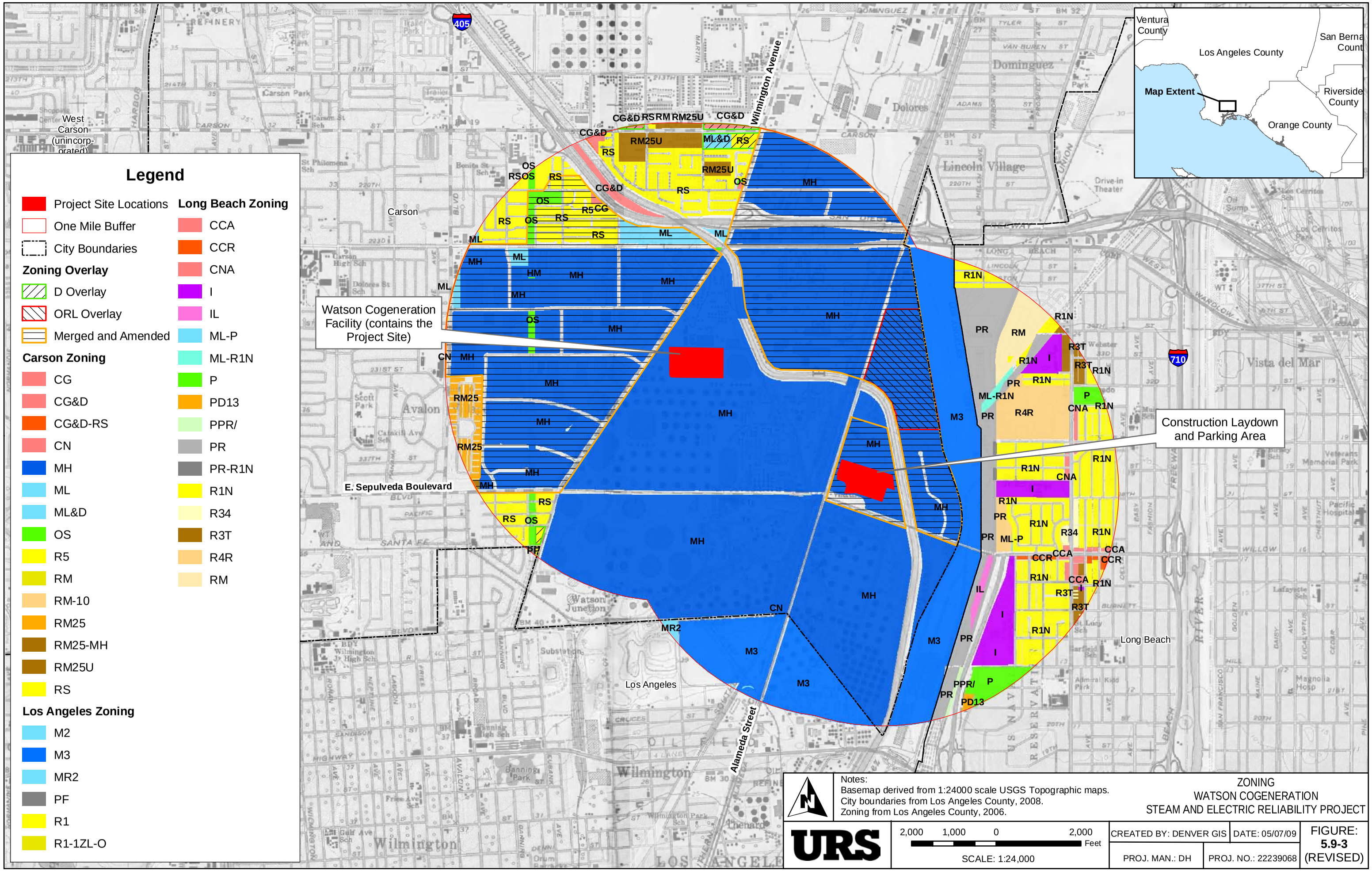

Path: Y:\GIS\Projects\BP_Carson_Cogen\mxds\fig5-9-3_Zoning.mxd

Appendix D
Transmission System Design

Figure D-1

230 kV System Overall One-Line Diagram

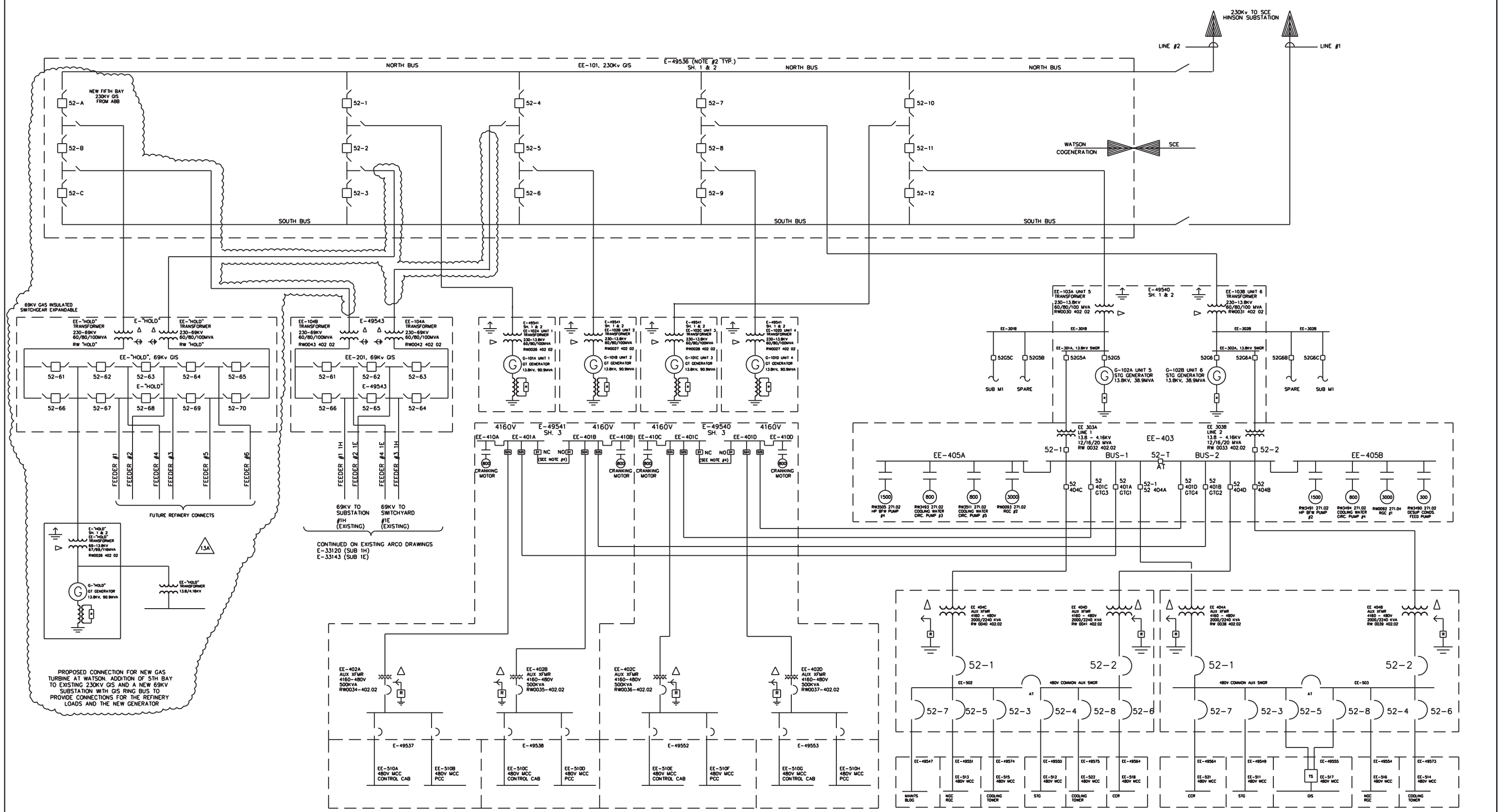

NOTE:
1. AT DENOTES BREAKER AUTOMATIC TRANSFER RELAY SCHEME
2. NUMBER INDICATES ONE-LINE DIAGRAM DRAWING NUMBERS
3. TS DENOTES MANUAL TRANSFER SWITCH
4. NC DENOTES BREAKER NORMALLY CLOSE / NO DENOTES BREAKER NORMALLY OPEN

REV	DATE	AUTH	PROJ ENGR	REVISION	BY	CKD	APR
6	7/27/87	AFC-1286		REVISED AS INDICATED	CM	RE	
7	9/9/87	AFC-1286		REVISED AS INDICATED	EW	RE	
8		AFC-	M. SALDANA	REVISED AS INDICATED			
9	3/15/93	ECR-482-92	R.M. STEPHENS	ADDED TIE BREAKER TO EE-401A & B	RMS	RMS	
10	12/27/99	PHIL GRAY	PHIL GRAY	CAD FOR Y2K	GWH	PG	TN
11	02/27/03	N/A	P. GRAY	REVISED PER MARK-UPS	GWH	PG	PG
12	10/20/03		P. GRAY	REVISED PER MARK UP	GWH		PG
13A	7/16/08	FM-808	P. GRAY	MANGAN MARK-UP	JRJ	PLG	PLG

Watson Cogeneration Company
Carson, Ca.

230 KV SYSTEM
OVERALL ONE-LINE DIAGRAM
FIGURE D-1

GRID: 5W-14N 6W-15N 4W-16N 5W-16N 6W-16N

DWG NO SK-9080-49535D

REVISION 13A

A5

INDEX REV

THIS IS A COGEN CAD DRAWING.
ALL COGEN CAD DRAWINGS WILL BE UP DATED BY COGEN.

Figure D-2

Breaker Ratings

FIGURE D-2
BREAKER RATINGS

WATSON COGENERATION STEAM AND ELECTRIC RELIABILITY PROJECT

GAS INSULATED SWITCHGEAR RATING DATA NEW BREAKERS: 52-A,52-B,AND 52-C
EXISTING BREAKERS: 52-1 THROUGH 52-12

VOLTAGE		RATED CURRENT			RATED IMPULSE AMPS		RATED SHORT TIME AMPS		CURRENT TRANSFORMERS		POTENTIAL TRANSFORMERS			
RATED	MAX SERVICE	LINE BAY	CABLE BAY	CIRCUIT BREAKER		ASYM.		3sec	RATIO	CLASS	VA		RATIO	CLASS
			BUSBAR BAY								SINGLE PH	3 PHASE		
230KV TYPE ENK														
230KV	242KV	3000 A	3000 A	3150 A		101kA		63kA	2000:5	C800	3000		138000 : 115	0.3 ZZ
												1500	138000 : 115	0.3 ZZ

72.5 KV TYPE ELK														
		BUS	BREAKER	DISCONNECTS	BREAKER	BUS	BREAKER 3PH	BUS 3 PH						
69KV	72.5KV	1250 A	1250 A	1250 A	31.5 kA Sym Inst.	47kA Asym Mom.	17.5kA Sym	21.7kA Asym Mom	Relay 1200:5	C400			40250 :115	0.3 ZZ
					47kA Asym. Mom		21.7kA Asym Mom.		Meter 600/1200:5	CL .38-0.9			BIL 350kV	

Figure D-3

Electrical Overall One Line Diagram

NOTES:

1. ELECTRICAL RATINGS SHOWN ARE PRELIMINARY IN NATURE AND ARE SUBJECT TO CHANGE PENDING DETAILED DESIGN.

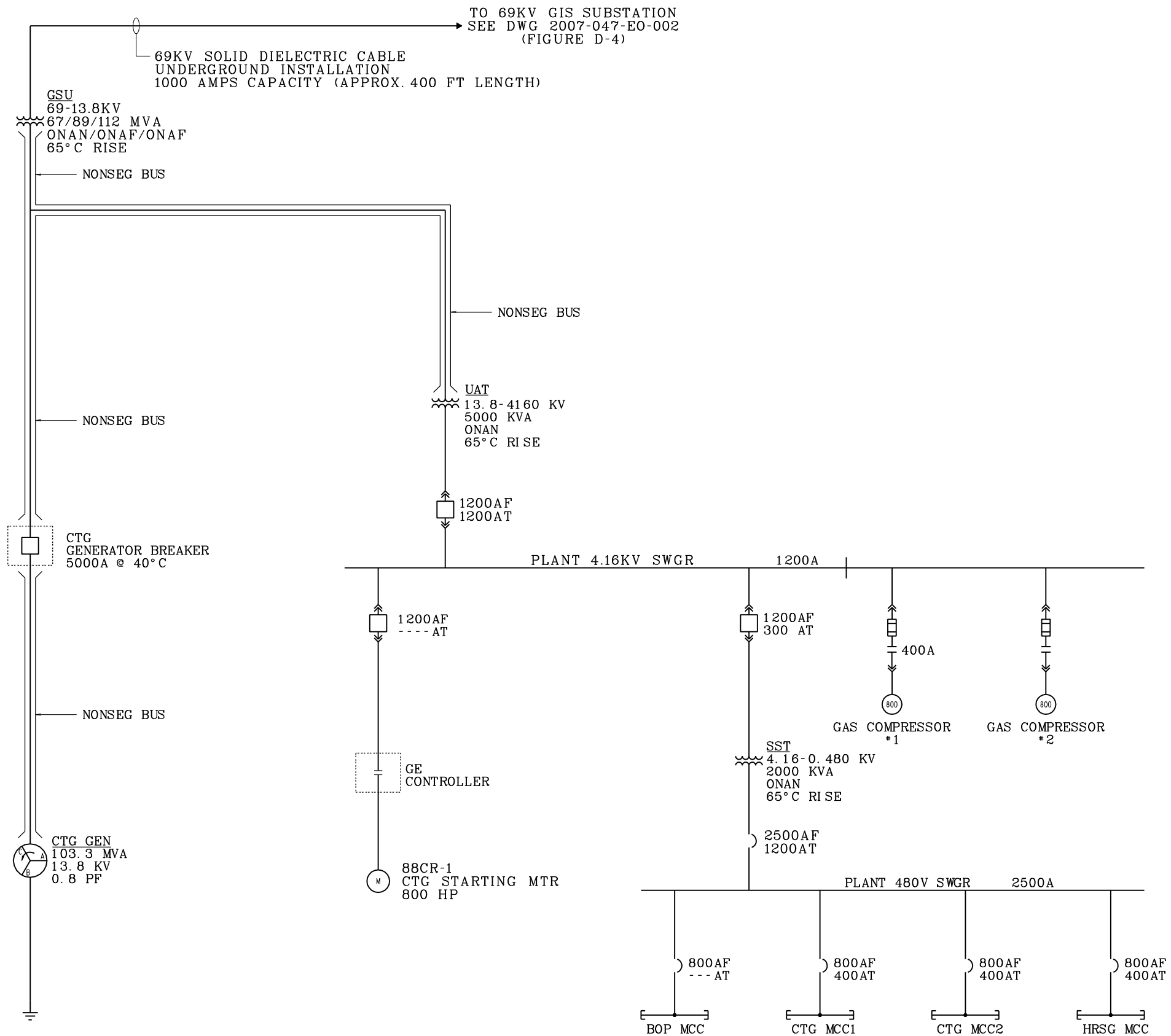

– PRELIMINARY –
NOT FOR CONSTRUCTION

REV	DESCRIPTION	DWN	CHK	APP	DATE
F	ADDED FIGURE NUMBERS	GLZ	CBS	SMG	06-01-09
E	REMOVED 69KV GIS SUBSTATION, DELETED NOTE 2	BMB	CBS	JBL	05-18-09
D	REVISEED 69KV GIS	BMB	CBS	JBL	04-29-09
C	DELETED BACKCIRCLES	EJS	CBS	SMG	01-27-09
B	ADDED GAS COMPRESSORS #1 & #2 / CHANGED 69KV GIS SUB FROM EXISTING TO NEW	GLZ	CBS	SMG	06-04-08
A	PRELIMINARY	HPB	CBS	SMG	05-22-08

WATSON COGENERATION
STEAM AND ELECTRIC RELIABILITY PROJECT

Kiewit

Kiewit Power
8455 Lenexa Drive
Lenexa, Kansas 66214

ELECTRICAL ONE LINE DIAGRAM
OVERALL
FIGURE D-3

	by	date
DESIGNED	CBS	06-04-08
DRAWN	HPB	06-04-08
CHECKED	–	–
APPROVED	–	–

DRAWING NUMBER
2007-047-EO-001A

Figure D-4

Electrical One-Line Diagram
New 69 kV GIS Substation

NOTES:

1. ELECTRICAL RATINGS SHOWN ARE PRELIMINARY IN NATURE AND ARE SUBJECT TO CHANGE PENDING DETAILED DESIGN.
2. 69KV GIS SUBSTATION LAYOUT IS PRELIMINARY IN NATURE PENDING DETAILED DESIGN.

NEW 69KV GIS SUBSTATION
2000A, 31.5 KA SYM INTERRUPTING

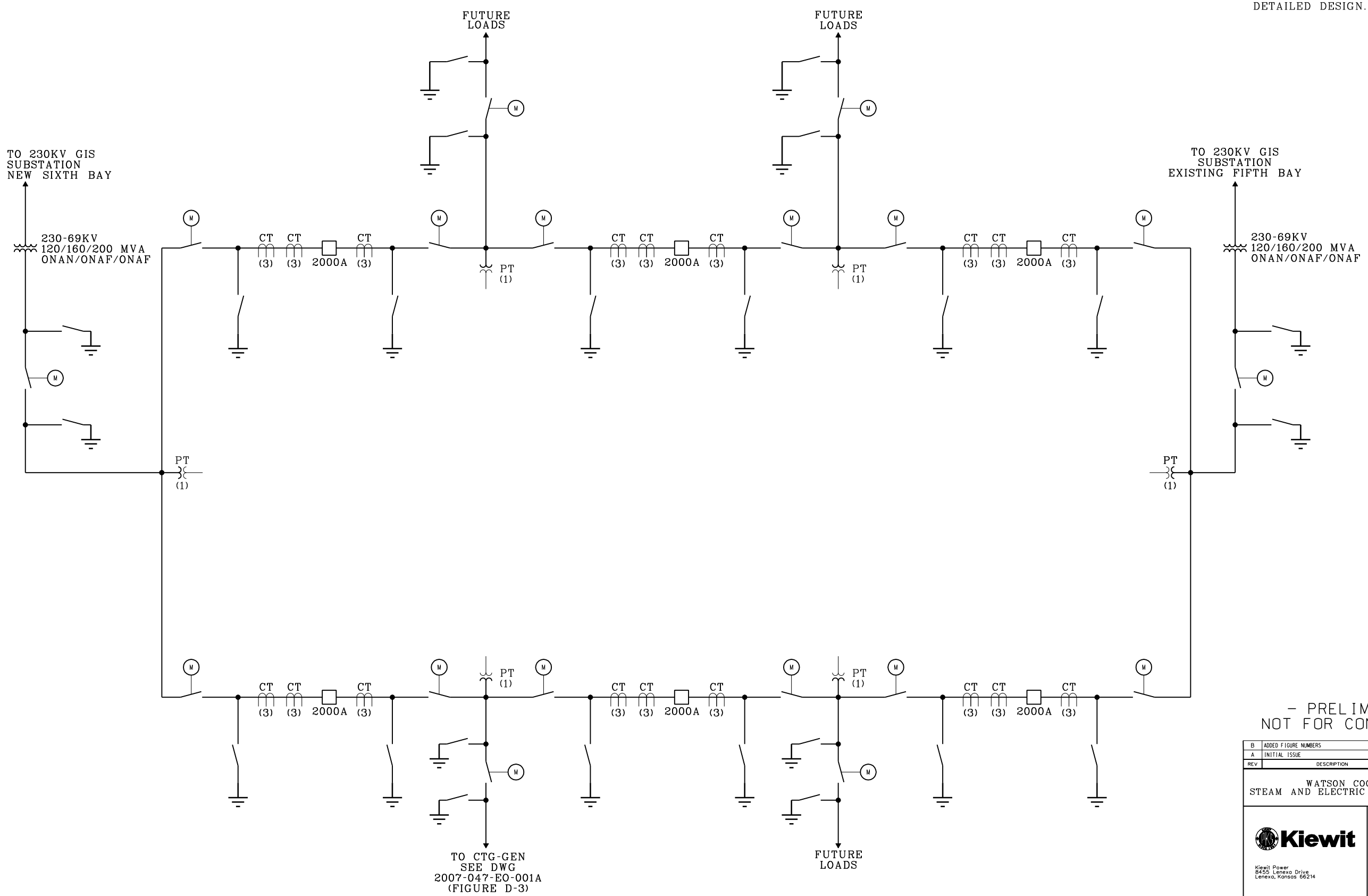

– PRELIMINARY –
NOT FOR CONSTRUCTION

REV	DESCRIPTION	DWN	CHK	APP	DATE
B	ADDED FIGURE NUMBERS	GLZ	CBS	SMG	06-01-09
A	INITIAL ISSUE	BMB	CBS	JBL	05-18-09

WATSON COGENERATION
STEAM AND ELECTRIC RELIABILITY PROJECT

Kiewit

Kiewit Power
8455 Lenexa Drive
Lenexa, Kansas 66214

ELECTRICAL ONE LINE DIAGRAM
NEW 69KV GIS SUBSTATION
FIGURE D-4

	by	date
DESIGNED	CBS	05-14-09
DRAWN	BMB	05-14-09
CHECKED	–	–
APPROVED	–	–

DRAWING NUMBER
2007-047-EO-002

CAISO Interconnection Feasibility Study Agreement Request

alternativenergy

bp

BP Alternative Energy North America Inc
700 Louisiana Street
33 rd Floor
Houston, TX 77002

May 28, 2008

California ISO
Attention: Ms. Judy Brown
151 Blue Ravine Road
Folsom, CA 95630

Direct: 713.354.2166
Main: 713.354.2000
Mobile: 832.434.6175
Fax: 713.354.2120
Ross.metersky@bp.com

RE: Interconnection Feasibility Study Agreement

To Whom It May Concern:

BP Alternative Energy North America Inc. submits this interconnection request for a nominal 85 MW net addition to the Watson Cogeneration Power Plant in Carson, CA. Attached to this request please find (i) check number 0801367891 in the amount of $10,000, (ii) a completed application in the form of the CAISO's Attachment A to LGIP, and (iii) evidence of site control.

Thank you in advance for your consideration of this request for interconnection.

Please let us know if you need additional information or have any questions regarding our request. We look forward to working with CAISO.

Sincerely,

Ross Metersky
Director, Business Development
Power Americas

Enclosure

BP America Production Company
509 South Boston
Tulsa, OK 74103

05/27/08

600LT

CALIFORNIA ISO CORPORATION
151 BLUE RAVINE ROAD
FOLSOM, CA 95630 US

VENDOR NUMBER: 0080272618

TRACE NUMBER: 2000028739

DOCUMENT NO.	INVOICE DATE	INVOICE NO.	GROSS AMOUNT	DISCOUNT NO.	NET AMOUNT
1900577176	**05/23/08**	**95630**	**10,000.00**		**10,000.00**
FX; 3439225802; 7133542100; 7133542185; Marilynn Barber; 700 Louisiana ,33rd Floor; Houston, Texas ; 77002;					
		TOTALS	10,000.00		10,000.00

INQUIRIES CONCERNING THIS PAYMENT SHOULD BE DIRECTED TO OUR OFFICE, PLEASE CALL (800) 284-2244

IN ORDER TO AFFECT TIMELY INVOICE PAYMENT PLEASE PLACE YOUR VENDOR NUMBER ON ALL FUTURE INVOICES TO BP.
*** YOUR VENDOR NUMBER IS 0080272618

DETACH AND RETAIN THIS STUB FOR YOUR RECORDS

CHECK NO. 0801367891 ATTACHED BELOW

BP America Production Company
509 South Boston
Tulsa, OK 74103

62-20
311

CHECK NO. **0801367891**

05/27/08

PAY TO THE ORDER OF

CALIFORNIA ISO CORPORATION
151 BLUE RAVINE ROAD
FOLSOM, CA 95630 US

******$10,000.00

NOT VALID AFTER 6 MONTHS

Ten thousand and 00/100 Dollars

TRACE NUMBER: 2000028739

CITIBANK DELAWARE. A SUBSIDIARY OF CITICORP
ONE PENN'S WAY, NEW CASTLE, DE 19720

Authorized Signature

⑈0801367891⑈ ⑆031100209⑆ 3911648 1⑈

APPENDIX 1 to LGIP
INTERCONNECTION REQUEST

Provide **three copies** of this completed form pursuant to Section 6 below.

1. The undersigned Interconnection Customer submits this request to interconnect its Large Generating Facility with the ISO Controlled Grid pursuant to the ISO Tariff.

2. This Interconnection Request is for (check one):
   - ☐ A proposed new Large Generating Facility.
   - ☒ An increase in the generating capacity or a Material Modification of an existing Generating Facility.

3. The Interconnection Customer provides the following information:

   a. Address or location, including the county, of the proposed new Large Generating Facility site or, in the case of an existing Generating Facility, the name and specific location, including the county, of the existing Generating Facility.

      Project Name: **Watson Cogeneration Company**

      Project Location:
      Street Address: **22850 South Wilmington Avenue**
      City, State: **Carson, CA**
      County: **Los Angeles**
      Zip Code: **90749**

   b. Maximum megawatt electrical output of the proposed new Large Generating Facility or the amount of megawatt increase in the generating capacity of an existing Generating Facility:

      Maximum megawatt electrical output (Net MW):
      Megawatt increase (Net MW): **85**

   c. Type of project (i.e., gas turbine, hydro, wind, etc.) and general description of the equipment configuration:

      - ☒ Cogeneration
      - ☐ Biomass
      - ☒ Gas Turbine
      - ☐ Hydro
      - ☐ Combined Cycle
      - ☐ Reciprocating Engine
      - ☐ Steam Turbine
      - ☐ Wind
      - ☐ Photovoltaic

      Other (please describe):

      General description of the equipment configuration:

      The Watson Cogeneration Expansion Project is a nominal 85 MW combustion turbine power plant with a single-pressure heat recovery steam generator to provide additional process steam to the BP Carson refinery.

d. Proposed In-Service Date, Trial Operation date and Commercial Operation Date by month, day, and year and term of service.

Proposed In-Service date:	**04 / 30 / 2012**
Proposed Trial Operation date:	**01 / 15 / 2012**
Proposed Commercial Operation date:	**05 / 31 / 2012**
Proposed Term of Service:	**20 years**

e. Name, address, telephone number, and e-mail address of the Interconnection Customer's contact person.

Name:	**Scott Hawley**
Title:	**Regulatory Affairs Advisor**
Company Name:	**Watson Cogeneration Company**
Street Address:	**22850 South Wilmington Avenue**
City, State:	**Carson, CA**
Zip Code:	**90749**
Phone Number:	**310-816-8843**
Fax Number:	**310-816-1721**
Email Address:	**scott.hawley@bp.com**

f. Approximate location of the proposed Point of Interconnection (i.e., specify interconnection point(s) and the location of interconnection):

The electrical connection will be made to the existing facility 230 kV gas insulated substation (GIS) through one of two paths. The base alternative is via a 13.8 kV to 230 kV generator step-up transformer utilizing underground 230 kV solid dielectric cables. An alternative design is through a 13.8 kV interconnection to an expansion of an existing 13.8 kV switchgear ring bus in the Watson Cogen facility and through 13.8 kV to 230 kV transformers. In both alternatives, power is exported to the grid by the two existing transmission lines to the Southern California Edison system at Hinson substation.

g. Interconnection Customer Data (set forth in Attachment A).

On, or before, the return of the executed Interconnection Feasibility Study Agreement to the ISO, the Interconnection Customer shall provide to the ISO the technical data called for in LGIP Appendix 1, Attachment A. Three (3) copies are required.

4. Applicable deposit amount as specified in the Interim LGIP made payable to California ISO. Send check to CAISO with Appendix 1 to LGIP Interconnection Request for processing.

5. Evidence of Site Control as specified in the LGIP and name(s), address(es) and contact information of site owner(s) (check one):

☒ Is attached to this Interconnection Request
☐ Will be provided at a later date in accordance with this LGIP

6. This Interconnection Request shall be submitted to the representative indicated below:

Judy Brown
New Resource Interconnection
California ISO
P.O. Box 639014
Folsom, CA 95763-9014

Overnight address: 151 Blue Ravine Road, Folsom, CA 95630

7. Representative of the Interconnection Customer to contact [To be completed by the Interconnection Customer].

Name:	**Scott Hawley**
Title:	**Regulatory Affairs Advisor**
Company Name:	**Watson Cogeneration Company**
Street Address:	**22850 South Wilmington Avenue**
City, State:	**Carson, CA**
Zip Code:	**90749**
Phone Number:	**310-816-8843**
Fax Number:	**310-816-1721**
Email Address:	**scott.hawley@bp.com**

9. This Interconnection Request is submitted by:

Name of the Interconnection Customer: Watson Cogeneration Company

By (signature): _____

Name (type or print): Ross Metersky

Title: Director, Business Development

Date: **May 28, 2008**

Attachment A
To Part 1
Interconnection Request

LARGE GENERATING FACILITY DATA

Provide three copies of this completed form pursuant to Section 7 of Part 1.

1. **Provide two original prints and one reproducible copy (no larger than 36" x 24") of the following:**

   A. Site drawing to scale, showing generator location and point of interconnection with the ISO Controlled Grid.
   B. Single-line diagram showing applicable equipment such as generating units, step-up transformers, auxiliary transformers, switches/disconnects of the proposed interconnection, including the required protection devices and circuit breakers. For wind generator farms, the one line diagram should include the distribution lines connecting the various groups of generating units, the generator capacitor banks, the step up transformers, the distribution lines, and the substation transformers and capacitor banks at the point of interconnection with the utility.

2. **Generating Facility Information**
   A) Total Generating Facility rated output (kW): _____98,600_____
   B) Generating Facility auxiliary load (kW): ____5,000_____
   C) Project net capacity (kW): ___93,600_____
   D) Standby load when Generating Facility is off-line (kW): _____1,100_____

   E) Number of Generating Units: _____1_____
   (Please repeat the following items for each generator)
   F) Individual generator rated output (kW for each unit):
   _____98,600_____
   G) Manufacturer: _____GE_____
   H) Year Manufactured: ____2008_____
   I) Nominal Terminal Voltage: ___13,800 Volts_____
   J) Rated Power Factor (%): __85_____
   K) Type (Induction, Synchronous, D.C. with Inverter): _____Synchronous_____
   L) Phase (3 phase or single phase): __3_____
   M) Connection (Delta, Grounded WYE, Ungrounded WYE, impedance grounded):
   ____Delta, impedance grounded_____
   N) Generator Voltage Regulation Range: ____5%_____
   O) Generator Power Factor Regulation Range: ___0.85 lag to 0.95 lead_____
   P) For combined cycle plants, specify the plant output for an outage of the steam turbine or an outage of a single combustion turbine: N/A

3. **Synchronous Generator – General Information:**
   (Please repeat the following for each generator)

   A. Rated Generator speed (rpm): __3600_____
   B. Rated MVA: ___116_____
   C. Rated Generator Power Factor: _____0.85_____
   D. Generator Efficiency at Rated Load (%): __98.75_____
   E. Moment of Inertia (including prime mover): ___209,040 lb-ft^^2_____
   F. Inertia Time Constant (on machine base) H: _5.396 kw-sec/kVA_ sec or MJ/MVA

G. SCR (Short-Circuit Ratio - the ratio of the field current required for rated open-circuit

voltage to the field current required for rated short-circuit current): ____0.47_____

H. Please attach generator reactive capability curves.

I. Rated Hydrogen Cooling Pressure in psig (Steam Units only): ___N/A_____

J. Please attach a plot of generator terminal voltage versus field current that shows the air gap line, the open-circuit saturation curve, and the saturation curve at full load and rated power factor.

4. Excitation System Information

(Please repeat the following for each generator)

A. Indicate the Manufacturer _____GE_____ and Type ____4_____of excitation system used for the generator. For exciter type, please choose from 1 to 8 below or describe the specific excitation system.

1) Rotating DC commutator exciter with continuously acting regulator. The regulator power source is independent of the generator terminal voltage and current.

2) Rotating DC commentator exciter with continuously acting regulator. The regulator power source is bus fed from the generator terminal voltage.

3) Rotating DC commutator exciter with non-continuously acting regulator (i.e., regulator adjustments are made in discrete increments).

4) Rotating AC Alternator Exciter with non-controlled (diode) rectifiers. The regulator power source is independent of the generator terminal voltage and current (not bus-fed).

5) Rotating AC Alternator Exciter with controlled (thyristor) rectifiers. The regulator power source is fed from the exciter output voltage.

6) Rotating AC Alternator Exciter with controlled (thyristor) rectifiers.

7) Static Exciter with controlled (thyristor) rectifiers. The regulator power source is bus-fed from the generator terminal voltage.

8) Static Exciter with controlled (thyristor) rectifiers. The regulator power source is bus-fed from a combination of generator terminal voltage and current (compound-source controlled rectifiers system.

B. Attach a copy of the block diagram of the excitation system from its instruction manual. The diagram should show the input, output, and all feedback loops of the excitation system.

C. Excitation system response ratio (ASA): ___0.5_____

D. Full load rated exciter output voltage: ____300_____

E. Maximum exciter output voltage (ceiling voltage): ____1000_____

F. Other comments regarding the excitation system?

_____

_____

_____

5. **Power System Stabilizer Information.**
(Please repeat the following for each generator. All new generators are required to install PSS unless an exemption has been obtained from WECC. Such an exemption can be obtained for units that do not have suitable excitation systems.)

A. Manufacturer: _____GE_____
B. Is the PSS digital or analog? __digital_____
C. Note the input signal source for the PSS?
_____ Bus frequency _____ Shaft speed ___X__ Bus Voltage
_____ Other (specify source)
D. Please attach a copy of a block diagram of the PSS from the PSS Instruction Manual and the correspondence between dial settings and the time constants or PSS gain.
E: Other comments regarding the PSS?
_____
_____
_____

6. **Turbine-Governor Information**
(Please repeat the following for each generator)

Please complete Part A for steam, gas or combined-cycle turbines, Part B for hydro turbines, and Part C for both.

A. Steam, gas or combined-cycle turbines:

1.) List type of unit (Steam, Gas, or Combined-cycle):____Gas_____
2.) If steam or combined-cycle, does the turbine system have a reheat process (i.e., both high and low pressure turbines)? __n/a_____
3.) If steam with reheat process, or if combined-cycle, indicate in the space provided, the percent of full load power produced by each turbine:
Low pressure turbine or gas turbine: _n/a_____%
High pressure turbine or steam turbine: _n/a_____%

B. Hydro turbines:

1.) Turbine efficiency at rated load: __n/a_____%
2.) Length of penstock: ___n/a___ft
3.) Average cross-sectional area of the penstock: ___n/a____ft2
4.) Typical maximum head (vertical distance from the bottom of the penstock, at the gate, to the water level): _n/a_____ft
5.) Is the water supply run-of-the-river or reservoir: ____n/a_____
6.) Water flow rate at the typical maximum head: _n/a_____ft3/sec
7.) Average energy rate: ____n/a_____kW-hrs/acre-ft
8.) Estimated yearly energy production: __n/a_____kW-hrs

C. Complete this section for each machine, independent of the turbine type.

1.) Turbine manufacturer: _____GE_____
2.) Maximum turbine power output: _____98.6_____MW
3.) Minimum turbine power output (while on line): ____70_____MW
4.) Governor information:
a: Droop setting (speed regulation): ___4%_____
b: Is the governor mechanical-hydraulic or electro-hydraulic (Electro-hydraulic governors have an electronic speed sensor and transducer.)? _____electro-hydraulic_____

c: Other comments regarding the turbine governor system?

_____
_____
_____
_____

7. Synchronous Generator and Associated Equipment – Dynamic Models:

For each generator, governor, exciter and power system stabilizer, select the appropriate dynamic model from the General Electric PSLF Program Manual and provide the required input data. The manual is available on the GE website at www.gepower.com. Select the following links within the website: 1) Our Businesses, 2) GE Power Systems, 3) Energy Consulting, 4) GE PSLF Software, 5) GE PSLF User's Manual.

There are links within the GE PSLF User's Manual to detailed descriptions of specific models, a definition of each parameter, a list of the output channels, explanatory notes, and a control system block diagram. The block diagrams are also available on the Ca-ISO website.

If you require assistance in developing the models, we suggest you contact General Electric. Accurate models are important to obtain accurate study results. Costs associated with any changes in facility requirements that are due to differences between model data provided by the generation developer and the actual generator test data, may be the responsibility of the generation developer.

8. Induction Generator Data:

A. Rated Generator Power Factor at rated load: _____
B. Moment of Inertia (including prime mover): _____
C. Do you wish reclose blocking? Yes ___, No ___
Note: Sufficient capacitance may be on the line now, or in the future, and the generator may self-excite unexpectedly.

9. Generator Short Circuit Data

For each generator, provide the following reactances expressed in p.u. on the generator base:

- X"1 – positive sequence subtransient reactance: __0.171 saturated___
- X"2 – negative sequence subtransient reactance: __0.164 saturated___
- X"0 – zero sequence subtransient reactance: __0.109 saturated___

Generator Grounding:

A. __n/a___ Solidly grounded
B. __x__ Grounded through an impedance
Generator is grounded through a 25 kVA transformer 12:000:240V Z=6% with a 0.4 ohm resistor on the secondary
Impedance value in p.u on generator base. R:_____n/a_____p.u.
X:_____p.u.
C. _n/a____ Ungrounded

10. Step-Up Transformer Data

For each step-up transformer, fill out the data form provided in Table 1.

11. Line Data

There is no need to provide data for new lines that are to be planned by the Participating TO. However, for transmission lines that are to be planned by the generation developer, please provide the following information:

Nominal Voltage: ___n/a_____
Line Length (miles): _____n/a_____
Line termination Points: _____n/a_____
Conductor Type: ___n/a___ Size: __n/a_____
If bundled. Number per phase: _n/a_____, Bundle spacing: __n/a___in.
Phase Configuration. Vertical: _n/a_____, Horizontal: n/a_____
Phase Spacing (ft): A-B: ___n/a___, B-C: ___n/a____, C-A: ___n/a_____
Distance of lowest conductor to Ground: ___n/a_____ft
Ground Wire Type: ___n/a_____ Size: __n/a_____ Distance to Ground: __n/a____ft
Attach Tower Configuration Diagram
Summer line ratings in amperes (normal and emergency) _____n/a_____
Resistance (R): __n/a_____ p.u.**
Reactance: (X): ____n/a_____ p.u**
Line Charging (B/2): __n/a_____ p.u**
** On 100-MVA and nominal line voltage (kV) Base

12. Wind Generators

Number of generators to be interconnected pursuant to this Interconnection Request: _n/a___

Elevation: __n/a____ _n/a____ Single Phase __n/a___ Three Phase

Inverter manufacturer, model name, number, and version:
_____n/a_____

List of adjustable setpoints for the protective equipment or software:
_____n/a_____

Field Volts: ____n/a_____
Field Amperes: _____n/a_____
Motoring Power (kW): __n/a_____
Neutral Grounding Resistor (If Applicable): __n/a_____
I_2^2t or K (Heating Time Constant): _____n/a_____
Rotor Resistance: ____n/a_____
Stator Resistance: ____n/a_____
Stator Reactance: _____n/a_____
Rotor Reactance: _____n/a_____
Magnetizing Reactance: ___n/a_____
Short Circuit Reactance: _____n/a_____
Exciting Current: _____n/a_____
Temperature Rise: _____n/a_____
Frame Size: _____n/a_____
Design Letter: _____n/a_____
Reactive Power Required In Vars (No Load): ___n/a_____
Reactive Power Required In Vars (Full Load): ____n/a____
Total Rotating Inertia, H: ___n/a_____ Per Unit on KVA Base

Note: A completed General Electric Company Power Systems Load Flow (PSLF) data sheet must be supplied with the Interconnection Request. If other data sheets are more appropriate to the proposed device then they shall be provided and discussed at Scoping Meeting.

TABLE 1

TRANSFORMER DATA

UNIT_____#1_____

NUMBER OF TRANSFORMERS___1_____ PHASE ____3___

RATED KVA	H Winding	X Winding	Y Winding
Connection (Delta, Wye, Gnd.)	___Wye_____	___Delta_____	_____
55 C Rise	_____	_	_____
65 C Rise	_____x_____	_____x_____	_____
RATED VOLTAGE	___230 kV____	__13.8 kV_____	_____
BIL	_____900_____	_____	_____
AVAILABLE TAPS (planned or existing)	2 +\- 2.5%__	_____	_____
LOAD TAP CHANGER?	no _____	__no_____	_____
TAP SETTINGS	__nominal_	_____	_____
		_____	

COOLING TYPE : OA_____ OA/FA_____ OA/FA/FA___X___ OA/FOA_____

IMPEDANCE	H-X	H-Y	X-Y
Percent	_____9_____	_____	_____
MVA Base	____67_____	_____	_____
Tested Taps	__nominal_____	_____	_____

WINDING RESISTANCE	H	X	Y
Ohms	___TBD_____	___TBD_____	_____

CURRENT TRANSFORMER RATIOS

H_4: 400:5____ X___3: 6000:5___ Y_____ N_____

PERCENT EXCITING CURRENT 100 % Voltage; __per test 110% Voltage_per test

Supply copy of nameplate and manufacture's test report when available.

ESTIMATED SATURATION AND SYNCHRONOUS IMPEDANCE CURVES
116000 KVA - 3600 RPM - 13800 VOLTS - 0.85 PF
300 FLD VOLTS - 40 C COLD AIR - 0 FT ALT

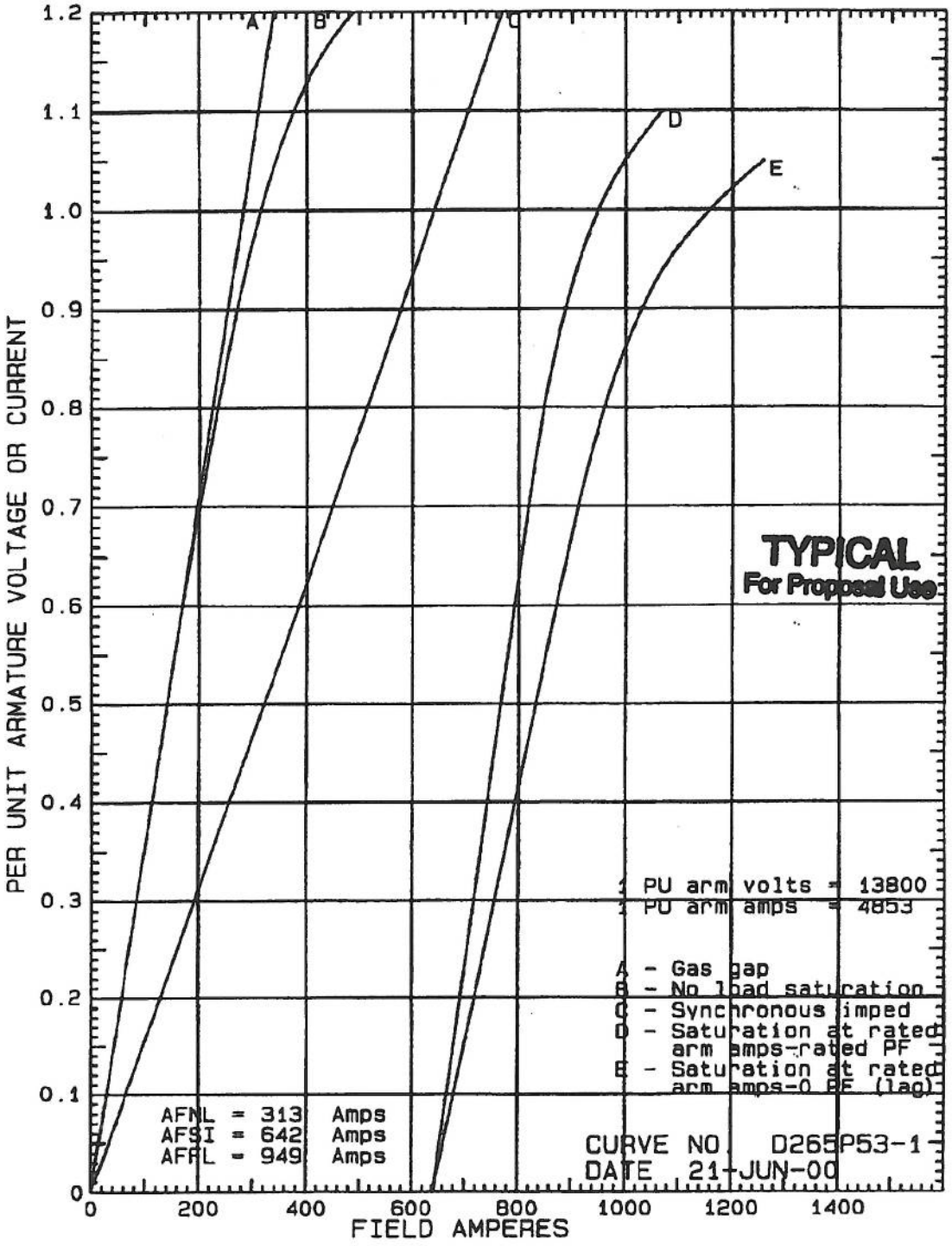

ESTIMATED REACTIVE CAPABILITY CURVES

116000 KVA - 3600 RPM - 13800 VOLTS - 0.85 PF
300 FLD VOLTS - 40 C COLD AIR - 0 FT ALT

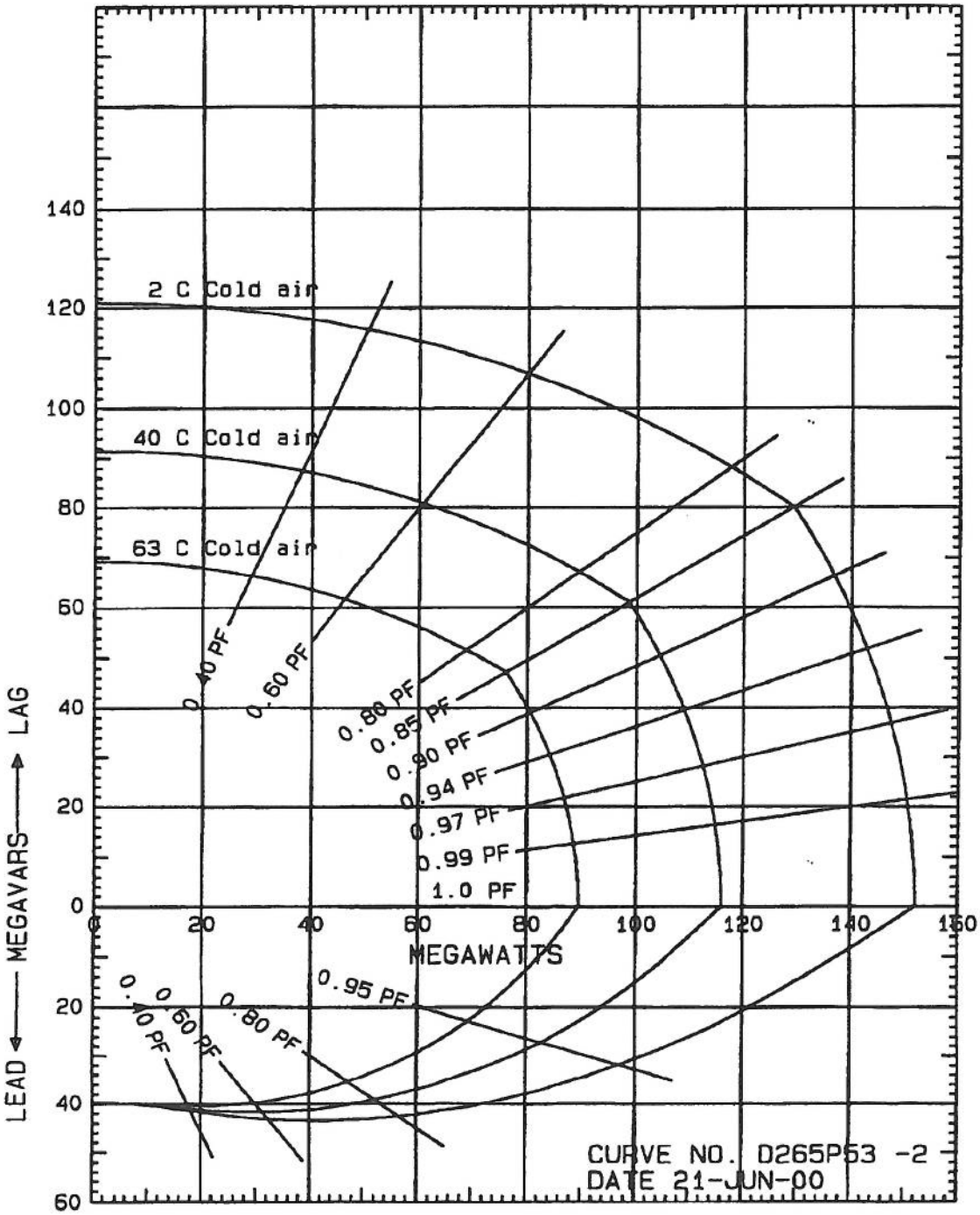

TYPICAL
For Proposal Use

ESTIMATED EXCITATION V CURVES

116000 KVA - 3600 RPM - 13800 VOLTS - 0.85 PF
300 FLD VOLTS - 40 C COLD AIR - 0 FT ALT

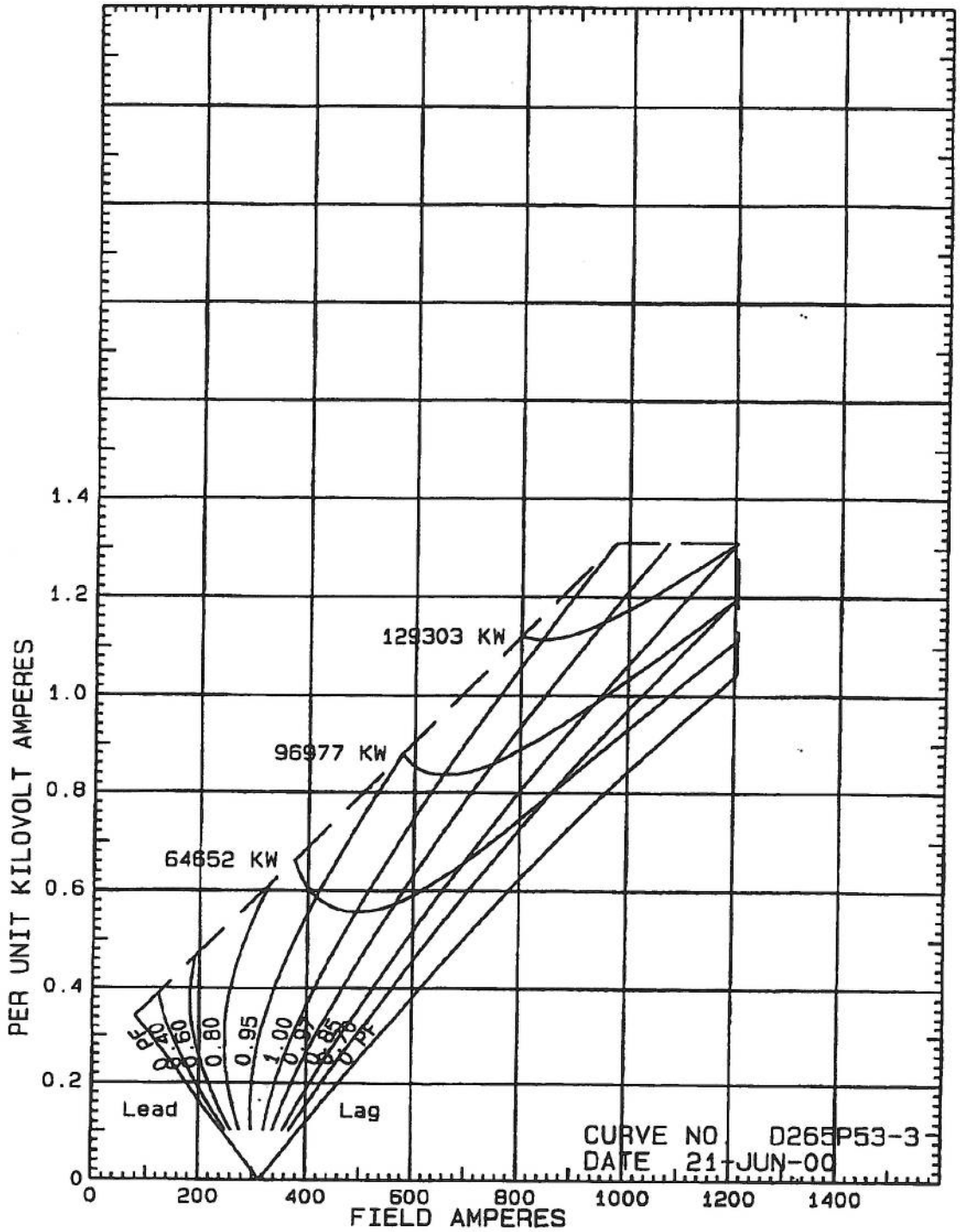

TYPICAL
For Proposal Use

SIZE	DWG NO	SH	REV
A	hcs122199	3	1

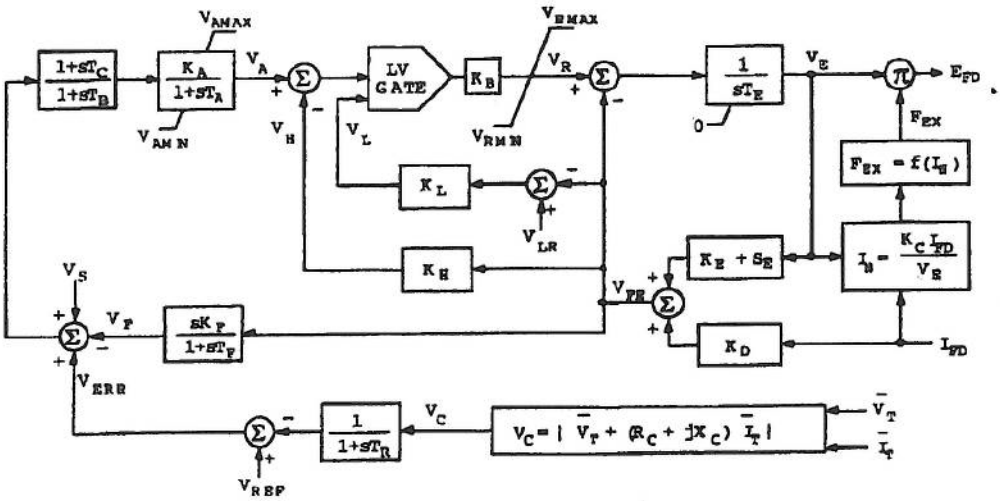

Type AC2, High Initial Response Alternator-Rectifier Excitation System With Non-Controlled Rectifiers, (Ref. IEEE Transactions on Power Systems Aparatus and System, Vol. PAS-100, Feb. 81)

Vc = Compensated Generator Terminal Voltage (per unit).
Vt = Generator Terminal Voltage (per unit).
Rc = Active (real component) Generator Terminal Current Compensation, Zero For GE Units.
Xc = Reactive (imaginary component) Generator Terminal Current Compensation, Use Field Setting.
It = Generator Terminal Current (per unit).
IFD = Generator Field Current (per unit of air gap).
EFD = Generator Field Voltage (per unit of air gap).

GENERAL ELECTRIC COMPANY	SIZE	CAGE CODE	DRW NO
GE Power Generation SCHENECTADY, NY	A		hcs122199
DRAWN Harold C. Sanderson			
ISSUED	SCALE	12/21/99	SHEET 3

TYPICAL
For Proposal Use

TYPICAL EX2000 Power System Stabilizer (PSS)
7A6_60HZ GT

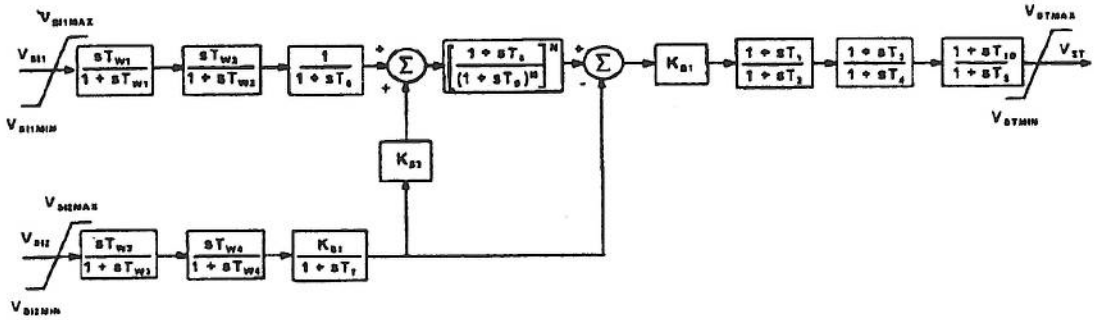

Ref. IEEE 421.5-1992 Type PSS2A

Note: Parameters shown with ranges give the typical or useful ranges actual setting ranges are usually much wider.

VSI1 = speed input VSI2 = electrical power input

VSI1max, VSI1min - input #1 limits +/- 0.08 pu (fixed)

VSI2max, VSI2min - input #2 limits +/- 1.25 pu (fixed)

*T1 = lead #1 0.15 (range 0.1 - 2.0 sec) *T2 = lag #1 0.03 (range 0.01 - 1.0 sec)

*T3 = lead #2 0.15 (range 0.1 - 2.0 sec) *T4 = lag #2 0.03 (range 0.01 - 1.0 sec)

T5 = lag #3 0.0 (fixed not used in GE design) can be used if there are three lead lags or for equivalent torsional filter time constant which may be required for some units (determined by studies)

T6 = 0.0 (fixed) T7 = TW 2.0 sec (range 2 - 15 sec)

T8 = 0.5 sec (fixed) T9 = 0.1 sec (fixed)

T10 = Lag #3 = 0.0 (fixed not used in GE design)

N = 1 (fixed) M = 5 (fixed)

*KS1 = PSS gain = 8 - (range 3 - 20 typical)

KS2 = 0.19 = TW/(2H) - where H = combined turbine-gen. Assumed inertia constant

KS3 = 1.0

VSTmax = (range 0.05 to 0.1) VSTmin = (range -0.05 to -0.1)

TW1 = TW see note on T7 above TW2 = TW see note on T7 above

TW3 = TW see note on T7 above TW4 = 0.0 (fixed)

* Note:Lead/Lags and Gain must be Determined by Studies

HCS 2-22-2000

TYPICAL
For Proposal Use

Watson Cogeneration Company
Site Control

The site for the Watson Cogeneration Company's fifth train is already under the control of the Watson Cogeneration Company. Under the Land Use Agreement with BP's Carson Refinery, the Watson Cogeneration Company has the right to use 21.7 acres of land and easements for a cogeneration facility within the confines of the refinery. The fifth train was contemplated in the facility's original design and the space for the fifth train is included in the Land Use Agreement.

CAISO Interconnection Feasibility Study Executed Agreement

alternativenergy

bp

BP Alternative Energy North America Inc
700 Louisiana Street
12th Floor
Houston, TX 77002

November 20, 2008

California ISO
Attention: Ms. Judy Brown
151 Blue Ravine Road
Folsom, CA 95630

Direct: 713.354.2166
Main: 713.354.2000
Mobile: 832.434.6175
Fax: 713.354.2120
Ross.Metersky@bp.com

RE: Interconnection Feasibility Study Agreement

Dear Ms. Brown:

Enclosed please find an executed Large Generator Interconnection Study Process Agreement by and between Watson Cogeneration Company and California Independent System Operator Corporation. We have provided the requested information in Appendix A and will complete Appendix B prior to commencement of the Phase II Interconnection Study. The Additional Study Deposit of $240,000 was wired to your account on November 4, 2008. Site Exclusivity was previously demonstrated and we are in complete compliance with all requirements listed in Section 3.1 Appendix 2 to Large Generator Interconnection Procedures Relating to the Transition Cluster.

Also, please note that DUNS number for Watson Cogeneration Company is 18-319-2517.

Please confirm receipt of this information and provide a date by which the Phase I study will be completed.

Regards,

Ross Metersky
Director, Business Development
Power Americas

Enclosure

LARGE GENERATOR INTERCONNECTION STUDY PROCESS AGREEMENT

THIS AGREEMENT is made and entered into this 20TH day of NOVEMBER, 2008 by and between Watson Cogeneration Company, a general partnership organized and existing under the laws of the State of California, ("Interconnection Customer,") and the California Independent System Operator Corporation, a California nonprofit public benefit corporation existing under the laws of the State of California, ("CAISO"). The Interconnection Customer and the CAISO each may be referred to as a "Party," or collectively as the "Parties."

RECITALS

WHEREAS, the Interconnection Customer is proposing to develop a Large Generating Facility or generating capacity addition to an existing Generating Facility consistent with the Interconnection Request submitted by the Interconnection Customer dated May 28, 2008; and

WHEREAS, the Interconnection Customer desires to interconnect the Large Generating Facility with the CAISO Controlled Grid; and

WHEREAS, the Interconnection Customer has requested the CAISO to conduct or cause to be performed Interconnection Studies to assess the system impact of interconnecting the Large Generating Facility to the CAISO Controlled Grid and to specify and estimate the cost of the equipment, engineering, procurement and construction work needed on the Participating TO's electric system in accordance with Good Utility Practice to physically and electrically connect the Large Generating Facility to the CAISO Controlled Grid;

NOW, THEREFORE, in consideration of and subject to the mutual covenants contained herein the Parties agree as follows:

1.0 When used in this Agreement, with initial capitalization, the terms specified shall have the meanings indicated in the CAISO's FERC-approved Large Generation Interconnection Procedures in CAISO Tariff Appendix GG ("LGIP") or the Master Definitions Supplement, Appendix A to the CAISO Tariff, as applicable.

2.0 The Interconnection Customer elects and the CAISO shall conduct or cause to be performed Interconnection Studies, including any accelerated Interconnection Study, consistent with the LGIP in accordance with the CAISO Tariff.

3.0 The scope of the Interconnection Studies shall be subject to the assumptions set forth in Appendices A and B to this Agreement.

4.0 The Interconnection Studies will be based upon the technical information provided by the Interconnection Customer in the Interconnection Request, as may be modified as the result of the Scoping Meeting, subject to any modifications in accordance with Section 6.7.2 of the LGIP and modifications to the proposed Commercial Operation Date of the Large Generating Facility permitted by the LGIP. The CAISO reserves the right to request additional technical information from the Interconnection Customer as may reasonably become necessary consistent with Good Utility Practice during the course of the Interconnection Studies. If the Interconnection Customer modifies its designated Point of Interconnection, Interconnection Request, or the technical information

provided therein is modified, the Interconnection Studies may be modified as specified in the LGIP.

5.0 The Interconnection Study report for each Interconnection Study shall provide the information specified in the LGIP.

6.0 The Interconnection Customer shall provide an Interconnection Study Deposit, a Site Exclusivity Deposit, if applicable, and other Interconnection Financial Security for the performance of the Interconnection Studies in accordance with the provisions of Sections 3.5.1 and 9 of the LGIP.

Following the issuance of an Interconnection Study report, the CAISO shall charge and the Interconnection Customer shall pay its share of the actual costs of the Interconnection Study pursuant to Sections 3.5.1 and 7.8 of the LGIP.

Any difference between the deposits made toward the Interconnection Study process and associated administrative costs, including any accelerated studies, and the actual cost of the Interconnection Studies and associated administrative costs shall be paid by or refunded to the Interconnection Customer, in the appropriate allocation, in accordance with Section 3.5.1 of the LGIP.

7.0 Pursuant to Section 3.7 of the LGIP, the CAISO will coordinate the conduct of any studies required to determine the impact of the Interconnection Request on Affected Systems. The CAISO may provide a copy of the Phase I Interconnection Study results to an Affected System Operator and the Western Electricity Coordinating Council. Requests for review and input from Affected System Operators or the Western Electricity Coordinating Council may arrive at any time prior to interconnection.

8.0 Substantial portions of technical data and assumptions used to perform the Phase I Interconnection Study, such as system conditions, existing and planned generation, and unit modeling, may change after the CAISO provides the Interconnection Study results to the Interconnection Customer. Interconnection Study results will reflect available data at the time the CAISO provides the Phase I Interconnection Study report to the Interconnection Customer. The CAISO shall not be responsible for any additional costs, including, without limitation, costs of new or additional facilities, system upgrades, or schedule changes, that may be incurred by the Interconnection Customer as a result of changes in such data and assumptions.

9.0 **[NOT USED]**

10.0 The CAISO shall maintain records and accounts of all costs incurred in performing the Interconnection Study in sufficient detail to allow verification of all costs incurred, including associated overheads. The Interconnection Customer shall have the right, upon reasonable notice, within a reasonable time at the CAISO's offices and at its own expense, to audit the CAISO's records as necessary and as appropriate in order to verify costs incurred by the CAISO. Any audit requested by the Interconnection Customer shall be completed, and written notice of any audit dispute provided to the CAISO representative, within one hundred eighty (180) calendar days following receipt by the Interconnection

Customer of the CAISO's notification of the final costs of the Interconnection Study.

11.0 In accordance with Section 3.8 of the LGIP, the Interconnection Customer may withdraw its Interconnection Request at any time by written notice to the CAISO. Upon receipt of such notice, this Agreement shall terminate, subject to the requirements of Section 3.5.1 and 13.1 of the LGIP.

12.0 Pursuant to Section 4 of the LGIP, this Agreement shall become effective upon the date the fully executed Agreement is received by the CAISO. If the CAISO does not receive the fully executed Agreement and deposit or other Interconnection Financial Security pursuant to Section 3.5.1 of the LGIP, then the Interconnection Request will be deemed withdrawn upon the Interconnection Customer's receipt of written notice by the CAISO pursuant to Section 3.8 of the LGIP.

13.0 Miscellaneous.

13.1 Dispute Resolution. Any dispute, or assertion of a claim, arising out of or in connection with this Agreement, shall be resolved in accordance with Section 13.5 of the LGIP.

13.2 Confidentiality. Confidential Information shall be treated in accordance with Section 13.1 of the LGIP.

13.3 Binding Effect. This Agreement and the rights and obligations hereof, shall be binding upon and shall inure to the benefit of the successors and assigns of the Parties hereto.

13.4 Conflicts. In the event of a conflict between the body of this Agreement and any attachment, appendices or exhibits hereto, the terms and provisions of the body of this Agreement shall prevail and be deemed the final intent of the Parties.

13.5 Rules of Interpretation. This Agreement, unless a clear contrary intention appears, shall be construed and interpreted as follows: (1) the singular number includes the plural number and vice versa; (2) reference to any person includes such person's successors and assigns but, in the case of a Party, only if such successors and assigns are permitted by this Agreement, and reference to a person in a particular capacity excludes such person in any other capacity or individually; (3) reference to any agreement (including this Agreement), document, instrument or tariff means such agreement, document, instrument, or tariff as amended or modified and in effect from time to time in accordance with the terms thereof and, if applicable, the terms hereof; (4) reference to any applicable laws and regulations means such applicable laws and regulations as amended, modified, codified, or reenacted, in whole or in part, and in effect from time to time, including, if applicable, rules and regulations promulgated thereunder; (5) unless expressly stated otherwise, reference to any Article, Section or Appendix means such Article or Section of this Agreement or such Appendix to this Agreement, or such Section of the LGIP or such Appendix to the LGIP, as the case may be; (6) "hereunder", "hereof", "herein", "hereto" and words of similar import shall be deemed references to this Agreement as a whole and

not to any particular Article, Section, or other provision hereof or thereof; (7) "including" (and with correlative meaning "include") means including without limiting the generality of any description preceding such term; and (8) relative to the determination of any period of time, "from" means "from and including", "to" means "to but excluding" and "through" means "through and including".

13.6 Entire Agreement. This Agreement, including all Appendices and Schedules attached hereto, constitutes the entire agreement between the Parties with reference to the subject matter hereof, and supersedes all prior and contemporaneous understandings or agreements, oral or written, between the Parties with respect to the subject matter of this Agreement. There are no other agreements, representations, warranties, or covenants which constitute any part of the consideration for, or any condition to, any Party's compliance with its obligations under this Agreement.

13.7 No Third Party Beneficiaries. This Agreement is not intended to and does not create rights, remedies, or benefits of any character whatsoever in favor of any persons, corporations, associations, or entities other than the Parties, and the obligations herein assumed are solely for the use and benefit of the Parties, their successors in interest and, where permitted, their assigns.

13.8 Waiver. The failure of a Party to this Agreement to insist, on any occasion, upon strict performance of any provision of this Agreement will not be considered a waiver of any obligation, right, or duty of, or imposed upon, such Party.

Any waiver at any time by either Party of its rights with respect to this Agreement shall not be deemed a continuing waiver or a waiver with respect to any other failure to comply with any other obligation, right, duty of this Agreement. Termination or default of this Agreement for any reason by the Interconnection Customer shall not constitute a waiver of the Interconnection Customer's legal rights to obtain an interconnection from the Participating TO or CAISO. Any waiver of this Agreement shall, if requested, be provided in writing.

Any waivers at any time by any Party of its rights with respect to any default under this Agreement, or with respect to any other matter arising in connection with this Agreement, shall not constitute or be deemed a waiver with respect to any subsequent default or other matter arising in connection with this Agreement. Any delay, short of the statutory period of limitations, in asserting or enforcing any right under this Agreement shall not constitute or be deemed a waiver of such right.

13.9 Headings. The descriptive headings of the various Articles and Sections of this Agreement have been inserted for convenience of reference only and are of no significance in the interpretation or construction of this Agreement.

13.10 Multiple Counterparts. This Agreement may be executed in two or more counterparts, each of which is deemed an original but all constitute one and the same instrument.

13.11 Amendment. The Parties may by mutual agreement amend this Agreement by a written instrument duly executed by both of the Parties.

13.12 Modification by the Parties. The Parties may by mutual agreement amend the Appendices to this Agreement by a written instrument duly executed by both of the Parties. Such amendment shall become effective and a part of this Agreement upon satisfaction of all applicable laws and regulations.

13.13 Reservation of Rights. The CAISO shall have the right to make a unilateral filing with FERC to modify this Agreement with respect to any rates, terms and conditions, charges, classifications of service, rule or regulation under section 205 or any other applicable provision of the Federal Power Act and FERC's rules and regulations thereunder, and Interconnection Customer shall have the right to make a unilateral filing with FERC to modify this Agreement pursuant to section 206 or any other applicable provision of the Federal Power Act and FERC's rules and regulations thereunder; provided that each Party shall have the right to protest any such filing by another Party and to participate fully in any proceeding before FERC in which such modifications may be considered. Nothing in this Agreement shall limit the rights of the Parties or of FERC under sections 205 or 206 of the Federal Power Act and FERC's rules and regulations thereunder, except to the extent that the Parties otherwise mutually agree as provided herein.

13.14 No Partnership. This Agreement shall not be interpreted or construed to create an association, joint venture, agency relationship, or partnership between the Parties or to impose any partnership obligation or partnership liability upon any Party. No Party shall have any right, power or authority to enter into any agreement or undertaking for, or act on behalf of, or to act as or be an agent or representative of, or to otherwise bind, another Party.

13.15 Assignment. This Agreement may be assigned by a Party only with the written consent of the other Party; provided that a Party may assign this Agreement without the consent of the other Party to any Affiliate of the assigning Party with an equal or greater credit rating and with the legal authority and operational ability to satisfy the obligations of the assigning Party under this Agreement; and provided further that the Interconnection Customer shall have the right to assign this Agreement, without the consent of the other Party, for collateral security purposes to aid in providing financing for the Large Generating Facility, provided that the Interconnection Customer will require any secured party, trustee or mortgagee to notify the other Party of any such assignment. Any financing arrangement entered into by the Interconnection Customer pursuant to this Section will provide that prior to or upon the exercise of the secured party's, trustee's or mortgagee's assignment rights pursuant to said arrangement, the secured creditor, the trustee or mortgagee will notify the other Party of the date and particulars of any such exercise of assignment right(s). Any attempted assignment that violates this Section is void and ineffective. Any assignment under this Agreement shall not relieve a Party of its obligations, nor shall a Party's obligations be enlarged, in whole or in part, by reason thereof. Where required, consent to assignment will not be unreasonably withheld, conditioned or delayed.

IN WITNESS THEREOF, the Parties have caused this Agreement to be duly executed by their duly authorized officers or agents on the day and year first above written.

California Independent System Operator Corporation

By

Printed Name LAURA J. MANZ, VICE PRESIDENT MARKET & INFRASTRUCTURE DEVELOPMENT

Title

9/29/2008

Date

Watson Congeneration Company

By

Thomas A. Lu

Printed Name

Executive Director

Title

November 20, 2008

Date

Appendix A

Large Generator Interconnection Study Process Agreement

ASSUMPTIONS USED IN CONDUCTING THE PHASE I INTERCONNECTION STUDY

The Phase I Interconnection Study will be based upon the information set forth in the Interconnection Request and agreed upon in the Scoping Meeting held on August 5, 2008, subject to any modifications in accordance with Section 6.7.2 of the LGIP, and the following assumptions:

Designation of Point of Interconnection and configuration to be studied:

- **Arco Gen #1 & #2 230kV lines**

Deliverability status requested (please select one):

☑ Full Capacity

☐ Energy Only

Appendix B

Large Generator Interconnection Study Process Agreement

DATA FORM TO BE PROVIDED BY THE INTERCONNECTION CUSTOMER PRIOR TO COMMENCEMENT OF THE PHASE II INTERCONNECTION STUDY

Generating Facility size (MW): _____

Provide two copies of this completed form and other required plans and diagrams in accordance with Section 7.1 of the LGIP.

Provide location plan and one-line diagram of the plant and station facilities. For staged projects, please indicate future generation, transmission circuits, etc.

One set of metering is required for each generation connection to the new bus or existing CAISO Controlled Grid station. Number of generation connections: _____

On the one line indicate the generation capacity attached at each metering location. (Maximum load on CT/PT)

On the one line indicate the location of auxiliary power. (Minimum load on CT/PT)

Will an alternate source of auxiliary power be available during CT/PT maintenance?
☐ Yes ☐ No

Will a transfer bus on the generation side of the metering require that each meter set be designed for the total plant generation? ☐ Yes ☐ No

(Please indicate on one line).

What type of control system or PLC will be located at the Interconnection Customer's Large Generating Facility?

_____

_____

What protocol does the control system or PLC use?

_____

_____

Please provide a 7.5-minute quadrangle of the site. Sketch the plant, station, transmission line, and property line.

Physical dimensions of the proposed interconnection station:

_____

Bus length from generation to interconnection station:

_____

Line length from interconnection station to the Participating TO's transmission line.

_____

Tower number observed in the field. (Painted on tower leg)*

_____

Number of third party easements required for transmission lines*:

_____

* To be completed in coordination with the Participating TO or CAISO.

Is the Large Generating Facility in the Participating TO's service area?

☐ Yes ☐ No

Local service provider for auxiliary and other power: _____

Please provide proposed schedule dates:

Environmental survey start:	_____
Environmental impact report submittal:	_____
Procurement of project equipment:	_____
Begin Construction	Date:_____
Generator step-up transformer receives back feed power	Date:_____
Generation Testing	Date:_____
Commercial Operation Date	Date:_____

Level of Deliverability: Choose one of the following:

☐ Energy Only

☐ Full Capacity

CAISO Feasibility Study Payment

Metersky, Ross

From: Yarida, Paul
Sent: Thursday, November 13, 2008 2:31 PM
To: Metersky, Ross
Subject: Acc Details

Attachments: Picture (Device Independent Bitmap)

Status:	Completed
Reference No:	663 - 099
A/C To Debit	GLPW , BP ALTERNATIVE ENERGY COMPANY NORTH AMERICA
Payment Currency	USD, US DOLLAR
Amount	240,000.00
	Your Sole limit is 0.00 , your Dual limit is 0.00 (USD, US DOLLAR)
Value Date	4 November 2008
Payment Type	Wire

(Please fill in as much of the banking information as you know.)

Beneficiary Name	California ISO
Beneficiary's Address	
Beneficiary's Account Number	1499420225
Beneficiary's Bank Name	Bank of America
Beneficiary's Bank Location	Concord CA 94520
Beneficiary's Bank Routing Method	fed
Beneficiary's Bank Routing Code	026009593

Paul Yarida
Finance Analyst
BP Alternative Energy
700 Louisiana St., 33rd Floor
Houston,TX 77002
Office:713-354-2145
Cell:281-248-7561

Table F1 (Revised)
Design and Construction LORS

TABLE F1 (Revised)
DESIGN AND CONSTRUCTION LORS

LORS	Applicability	Compliance (AFC Section)
GO– 95, CPCU, "Rules for Overhead Electrical Line Construction"	Applies to the safety clearances around energized conductors during construction activities.	3.6.2.1 3.6.5
GO-128, CPUC, "Rules for Underground Electric Line Construction"	CPUC rule covers required clearances, grounding techniques, maintenance, and inspection requirements.	3.6.2: 3.5.4 3.9.3: 3.4.11.2
Title 8 CCR, Section 2700 *et seq*. "High Voltage Electrical Safety Orders"	Establishes essential requirements and minimum standards for installation, operation, and maintenance of electrical installation and equipment to provide practical safety and freedom from danger.	3.6 3.9.3
GO-52, CPUC, "Construction and Operation of Power and Communication Lines"	Applies to the design of facilities to provide or mitigate inductive interference.	3.6. 3.9.3 3.4.5

Notes:
CCR = California Code of Regulations
CPUC = California Public Utilities Commission
LORS = laws, ordinances, regulations, and standards

Appendix E
Visual Resources

Table E-1

Cooling Tower Exhaust Flow Parameters

Table E-1
Cooling Tower Exhaust Flow Parameters

Conditions						Annual Average
Ambient Dry Bulb Temperature	^{o}F	36	59	85	102	63.1
Relative Humidity	%	36%	60%	60%	16%	60%
Wet Bulb Temperature	^{o}F	28.7	51.4	73.9	67.7	54.9

Cooling Tower Exhaust Air Parameters[1]						Annual Average
Circulating Water Flow	gpm	8,857	8,857	8,857	8,857	8,857
Circulating Water Mass Flow (Liquid)	klb/hr	4,429	4,421	4,409	4,413	4,419
Heat Rejection Rate	MMBtu/hr	68.7	68.5	68.2	68.3	68.4
Exhaust Temperature	^{o}F	60.9	74.6	89.7	85.4	76.9
Moist Air Exhaust Mass Flow	klb/hr	4,214	4,140	4,028	4,062	3,996
Dry Air Mass Flow (Gas)	klb/hr	4,167	4,065	3,908	3,956	3,917
Liquid to Gas Mass Flow Ratio[2]	---	1.06	1.09	1.13	1.12	1.13

Source: Kiewit Power Engineers Co., 2009.

Notes:

1. The cooling tower parameters are per cell for the cooling tower addition.
2. The Liquid to Gas ratio is defined by the Cooling Tower Institute (CTI) as “lb. water/lb. dry air”.

^{o}F = degree Fahrenheit
% = percent
gpm = gallons per minute
klb/hr = kilopounds per hour
MMBtu/hr = million British thermal units per hour

Table E-2

HRSG Exhaust Flow Parameters

Table E-2
HRSG Exhaust Flow Parameters

Conditions		Case 1	Case 2	Case 3	Case 4	Case 5	Case 6	Case 7	Case 8	Case 9	Case 10	Case 11	Case 12	Annual Average
Ambient Temperature	^{o}F	36	36	36	59	59	59	85	85	85	102	102	102	63.1
Relative Humidity	%	36	36	36	60	60	60	60	60	60	16	16	16	60
Fogger Status	---	Off	Off	Off	On	On	On	On	On	On	On	On	On	On
HRSG Exhaust Gas Parameters														
Exhaust Flow	klb/hr	2,507	2,509	2,529	2,413	2,415	2,434	2,275	2,277	2,294	2,293	2,295	2,312	2,412
Exhaust Moisture	wt. %	4.11%	4.28%	5.73%	4.74%	4.91%	6.31%	5.63%	5.81%	7.15%	5.24%	5.42%	6.77%	6.44%
Exhaust Temperature	^{o}F	389	384	386	388	383	385	386	381	383	386	381	383	384

Source: Kiewit Power Engineers Co., 2009.

^{o}F = degree Fahrenheit
% = percent
klb/hr = kilopounds per hour
wt. % = weight percent

Appendix F
Water Resources

Figure 3-11 (Revised)

Process Flow Diagram

NOTES:

1. REFER TO WATER BALANCE FLOW DIAGRAM, DWG. NO. 2007-047-WB-001-01, FIGURE 3-13 (REVISED) AND FIGURE 5.5-1 (REVISED), FOR MAKEUP WATER, AND WASTEWATER REUSE/DISPOSAL.
2. THE LINE LETTERS CORRESPOND TO THOSE ON TABLE 3-2 (REVISED).

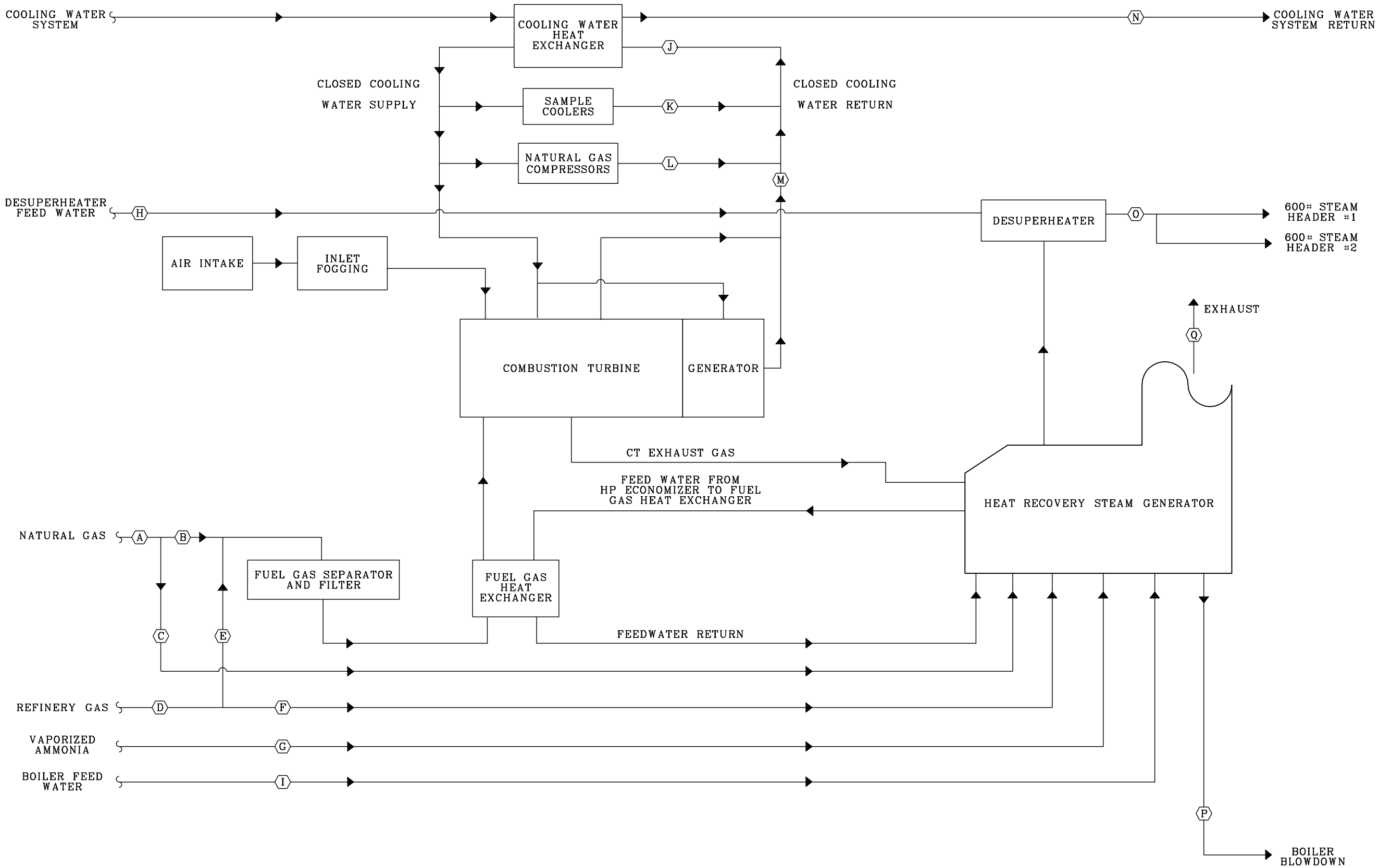

REV	DESCRIPTION	DWN	CHK	APP	DATE
E	REVISED NOTES	BDR	JBL	SMG	06-01-09
D	ADDED LINE NUMBERS AND NOTE 2	JMS	JBL	SMG	05-19-09
C	REVISED TO INLET FOGGING	EJS	JBL	SMG	01-27-09
B	ISSUED FOR APPLICATION	PAG	JBL	SMG	10-07-08
A	ISSUED FOR REVIEW	PAG	JBL	SMG	06-02-08

WATSON COGENERATION
STEAM AND ELECTRIC RELIABILITY PROJECT

Kiewit

Kiewit Power
8455 Lenexa Drive
Lenexa, Kansas 66214

PROCESS FLOW DIAGRAM
FIGURE 3-11 (REVISED)

	by	date
DESIGNED	JBL	05-02-08
DRAWN	PAG	05-02-08
CHECKED	JAR	06-02-08
APPROVED	SMG	06-02-08

DRAWING NUMBER
2007-047-PF-001-01

Table 3-2 (Revised)

Process Flow Diagram Values

Table 3-2 (Revised)
Process Flow Diagram Values

Line	Conditions		Case 1	Case 2	Case 3	Case 4	Case 5	Case 6	Case 7	Case 8	Case 9	Case 10	Case 11	Case 12	Annual Average	Maximum	Maximum*
	Ambient Temperature	°F	36	36	36	59	59	59	85	85	85	102	102	102	63.1	When firing Refinery Gas	When not firing Refinery Gas
	Relative Humidity	%	36	36	36	60	60	60	60	60	60	16	16	16	60		
	Fogger Status	---	Off	Off	Off	On	On	On	On	On	On	On	On	On	On		
								MASS BALANCE									
Consumables (Flow Rates)																	
Natural Gas																	
B	Combustion Turbine Natural Gas	lb/hr	31,497	31,497	31,497	30,479	30,479	30,479	28,720	28,720	28,720	27,995	28,650	28,650	30,202	31,497	46,481
C	Duct Burner Natural Gas	lb/hr	0	0	0	0	0	0	0	0	0	0	0	0	0	0	19,759
A	Natural Gas Total	lb/hr	31,497	31,497	31,497	30,479	30,479	30,479	28,720	28,720	28,720	27,995	28,650	28,650	30,202	31,497	66,240
Refinery Gas																	
E	Combustion Turbine Refinery Gas	lb/hr	16,959	16,959	16,959	16,410	16,410	16,410	15,463	15,463	15,463	16,166	15,425	15,425	16,261	16,959	0
F	Duct Burner Refinery Gas	lb/hr	0	2,254	22,362	0	2,254	21,091	0	2,254	19,299	0	2,254	19,495	20,808	22,362	0
D	Refinery Gas Total	lb/hr	16,959	19,213	39,321	16,410	18,665	37,501	15,463	17,718	34,763	16,166	17,680	34,921	37,069	39,321	0
Ammonia																	
G	Vaporized Ammonia	lb/hr	18	19	31	17	18	29	16	17	27	16	18	28	29	31	
Inputs (Flow Rates)																	
Boiler Feed Water																	
H	Desuperheater Feed Water	lb/hr	2,529	6,149	56,429	3,210	6,965	54,771	4,117	8,062	52,210	4,054	7,990	52,708	54,367	56,429	
I	Boiler Feed Water	lb/hr	355,881	390,579	655,630	352,735	387,145	634,743	346,539	380,558	603,723	346,404	380,466	606,199	629,851	655,630	
P	Boiler Blowdown	lb/hr	3,389	3,720	6,244	3,359	3,687	6,045	3,300	3,624	5,750	3,299	3,623	5,773	5,999	24,977	
Circulating Cooling Water																	
M	Combustion Turbine/ Generator Cooling Water	gpm	1,475	1,475	1,475	1,475	1,475	1,475	1,475	1,475	1,475	1,475	1,475	1,475	1,475	1,475	
K	Sample Coolers, Cooling Water	gpm	60	60	60	60	60	60	60	60	60	60	60	60	60	60	
L	Natural Gas Compressors	gpm	1,120	1,120	1,120	1,120	1,120	1,120	1,120	1,120	1,120	1,120	1,120	1,120	1,120	1,120	
J or N	Cooling Water Total[3]	gpm	2,655	2,655	2,655	2,655	2,655	2,655	2,655	2,655	2,655	2,655	2,655	2,655	2,655	2,921	
Outputs (Flow Rates)																	
	Net Facility output	kW	90,537	90,478	89,999	85,770	85,712	85,263	78,845	78,788	78,382	79,623	79,565	79,154	84,178	90,537	
O	Desuperheated Steam to Watson Steam Headers	lb/hr	341,457	378,124	680,844	339,143	375,670	659,293	334,148	370,492	627,188	333,956	370,333	630,046	654,230	680,844	

Table 3-2 (Revised)
Process Flow Diagram Values

Line	Conditions		Case 1	Case 2	Case 3	Case 4	Case 5	Case 6	Case 7	Case 8	Case 9	Case 10	Case 11	Case 12	Annual Average	Maximum	Maximum*
	Ambient Temperature	°F	36	36	36	59	59	59	85	85	85	102	102	102	63.1	When firing Refinery Gas	When not firing Refinery Gas
	Relative Humidity	%	36	36	36	60	60	60	60	60	60	16	16	16	60		
	Fogger Status	---	Off	Off	Off	On	On	On	On	On	On	On	On	On	On		
Q	Exhaust Gas	klb/hr	2,507	2,509	2,529	2,413	2,415	2,434	2,275	2,277	2,294	2,293	2,295	2,312	2,414	2,529	
								HEAT BALANCE									
Input -- Consumables																	
Natural Gas																	
B	Combustion Turbine Natural Gas	MMBtu/h LHV	648.4	648.4	648.4	627.4	627.4	627.4	591.2	591.2	591.2	576.3	589.7	589.7	621.7	648.4	956.8
C	Duct Burner Natural Gas	MMBtu/h LHV	0.0	0.0	0.0	0.0	0.0	0.0	0.0	0.0	0.0	0.0	0.0	0.0	0.0	0.0	406.7
A	Natural Gas Subtotal	MMBtu/h LHV	648.4	648.4	648.4	627.4	627.4	627.4	591.2	591.2	591.2	576.3	589.7	589.7	621.7	648.4	1,363.5
Refinery Gas																	
E	Combustion Turbine Refinery Gas	MMBtu/h LHV	308.4	308.4	308.4	298.5	298.5	298.5	281.3	281.3	281.3	294.0	280.6	280.6	295.8	308.4	0.0
F	Duct Burner Refinery Gas	MMBtu/h LHV	0.0	41.0	406.7	0.0	41.0	383.6	0.0	41.0	351.0	0.0	41.0	354.6	378.5	406.7	0.0
D	Refinery Gas Subtotal	MMBtu/h LHV	308.4	349.4	715.2	298.5	339.5	682.1	281.3	322.3	632.3	294.0	321.6	635.1	674.2	715.2	0.0
(A+D)	Natural Gas/Refinery Gas Subtotal	MMBtu/h LHV	956.8	997.8	1,363.5	925.9	966.9	1,309.5	872.4	913.4	1,223.5	870.3	911.3	1,224.9	1,295.9	1,363.5	
Ammonia																	
G	Vaporized Ammonia	MMBtu/h	0.0	0.0	0.0	0.0	0.0	0.0	0.0	0.0	0.0	0.0	0.0	0.0	0.0	0.0	
Inputs - Boiler Feed Water																	
H	Desuperheater Feed Water	MMBtu/h	0.6	1.4	12.6	0.7	1.6	12.2	0.9	1.8	11.7	0.9	1.8	11.8	12.1	12.6	
I	Boiler Feed Water	MMBtu/h	79.4	87.1	146.5	78.7	86.4	141.8	77.3	84.9	134.9	77.3	84.9	135.4	140.7	146.5	
(H+I)	Boiler Feed Water Subtotal	MMBtu/h	79.9	88.5	159.1	79.4	87.9	154.0	78.2	86.7	146.5	78.2	86.7	147.2	152.9	159.1	
	Total Inputs	MMBtu/h	1,036.7	1,086.3	1,522.6	1,005.3	1,054.8	1,463.5	950.7	1,000.1	1,370.0	948.5	998.0	1,372.1	1,448.8	1,522.6	
Outputs – Circulating Cooling Water																	
M	Combustion Turbine/ Generator Cooling Water	MMBtu/h	8.8	8.8	8.8	8.4	8.4	8.4	8.2	8.2	8.2	8.2	8.2	8.2	8.4	8.8	
K	Sample Coolers, Cooling Water	MMBtu/h	0.4	0.4	0.4	0.3	0.3	0.3	0.3	0.3	0.3	0.3	0.3	0.3	0.3	0.4	
L	Natural Gas Compressors	MMBtu/h	5.0	5.0	5.0	6.3	6.3	6.3	7.6	7.6	7.6	8.8	8.8	8.8	6.5	8.8	

Table 3-2 (Revised)
Process Flow Diagram Values

Line	Conditions		Case 1	Case 2	Case 3	Case 4	Case 5	Case 6	Case 7	Case 8	Case 9	Case 10	Case 11	Case 12	Annual Average	Maximum	Maximum*
	Ambient Temperature	ºF	36	36	36	59	59	59	85	85	85	102	102	102	63.1	When firing Refinery Gas	When not firing Refinery Gas
	Relative Humidity	%	36	36	36	60	60	60	60	60	60	16	16	16	60		
	Fogger Status	---	Off	Off	Off	On	On	On	On	On	On	On	On	On	On		
J or N	Cooling Water Subtotal[3]	MMBtu/h	14.2	14.2	14.2	15.0	15.0	15.0	16.1	16.1	16.1	17.4	17.4	17.4	15.2	19.1	
Other Outputs																	
	Gross Facility Electrical Output	MMBtu/h	321.8	321.8	321.8	305.4	305.4	305.4	281.7	281.7	281.7	284.3	284.3	284.3	301.7	321.8	
O	Desuperheated Steam to Watson Steam Headers	MMBtu/h	468.4	518.7	932.7	465.3	515.4	903.2	458.4	508.3	859.2	458.2	508.1	863.2	896.3	932.7	
P	Boiler Blowdown	MMBtu/h	1.7	1.8	3.2	1.6	1.8	3.1	1.6	1.8	2.9	1.6	1.8	2.9	3.0	12.7	
Q	Exhaust Gas	MMBtu/h	224.3	221.3	224.1	207.2	205.0	214.6	180.8	178.8	187.2	174.3	172.2	180.4	210.2	224.3	
	Radiation & Convection Heat Loss	MMBtu/h	6.2	8.1	22.8	6.0	7.9	22.0	5.7	7.5	20.5	5.7	7.5	20.6	21.7	22.8	
	Miscellaneous and Unaccounted Losses	MMBtu/h	0.2	0.4	3.9	4.7	4.2	0.3	6.5	6.1	2.3	7.0	6.8	3.3	0.6	7.0	
	Total Outputs	MMBtu/h	1,036.7	1,086.3	1,522.6	1,005.3	1,054.8	1,463.5	950.7	1,000.1	1,370.0	948.5	998.0	1,372.1	1,448.8	1,522.6	

Source: Kiewit Power Engineers Co., 2009.

*The maximum natural gas input occurs when refinery gas is not being utilized. All other "Max." column values remain unchanged.

Notes:

1. Refer to the Water Balance Flow Values Table 3-7 (Revised) for water usage and wastewater discharge.
2. Boiler Blowdown Rate: 1.0% except for the Max. Case which is 4.0%
3. Margin on Max. Cooling Water: 10.0%
4. Radiation & Convection Heat Loss – Unfired: 0.60%
5. Radiation & Convection Heat Loss – Minimum Fired: 0.75%
6. Radiation & Convection Heat Loss – Maximum Fired: 1.50%

ºF = degrees Fahrenheit
% = percent
gpm = gallons per minute
kW = kilowatt
klb/hr = kilopounds per hour
lb/hr = pounds per hour
LHV = lower heating value
MMBtu/h = million British thermal units per hour

Figure 3-13 (Revised)

Water Balance Flow Diagram

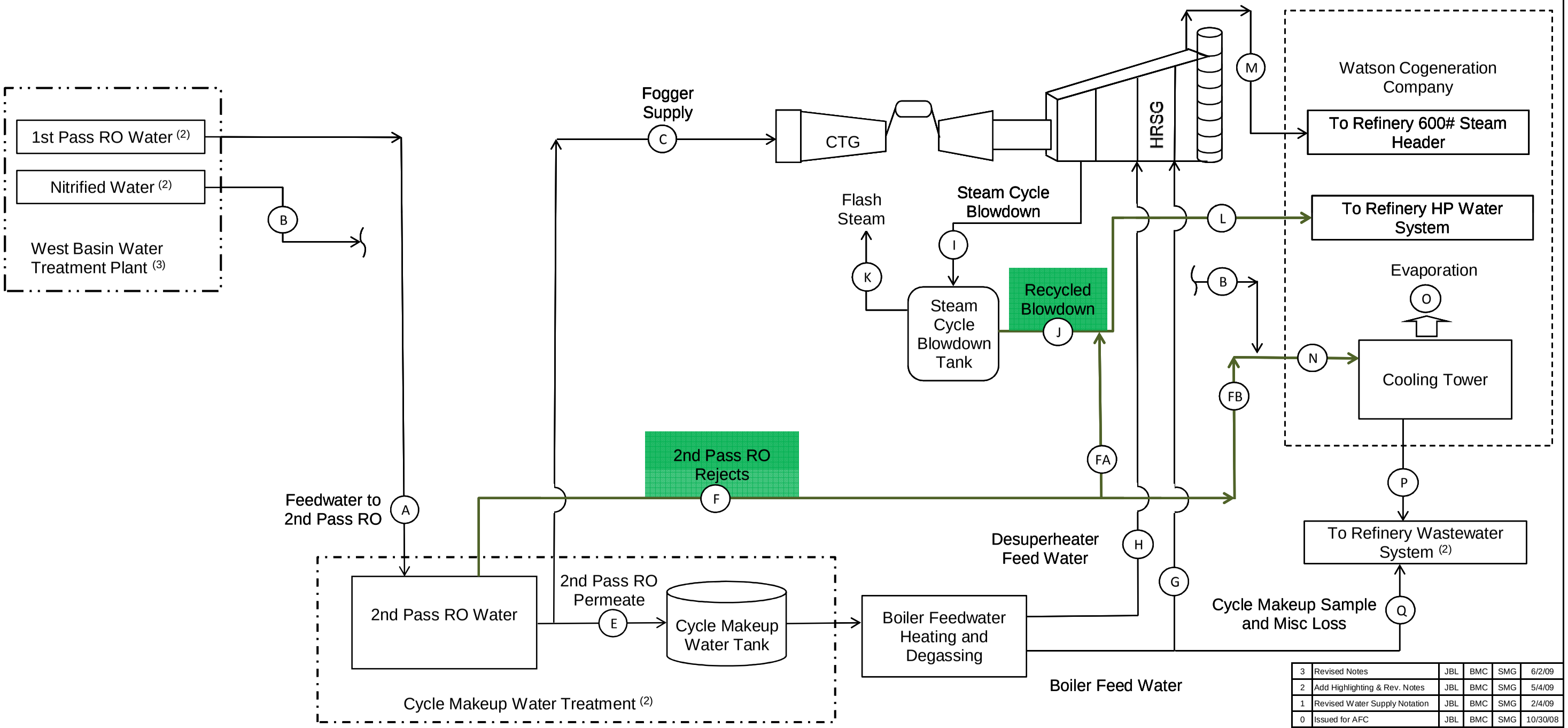

Rev	DESCRIPTION	Dwn	Chk	App	Date
3	Revised Notes	JBL	BMC	SMG	6/2/09
2	Add Highlighting & Rev. Notes	JBL	BMC	SMG	5/4/09
1	Revised Water Supply Notation	JBL	BMC	SMG	2/4/09
0	Issued for AFC	JBL	BMC	SMG	10/30/08

Watson Cogeneration Steam and Electric Reliability Project

Kiewit
8455 Lenexa Drive
Lenexa, Kansas 66214

WATER BALANCE FLOW DIAGRAM
FIGURE 3-13 (REVISED)

	by	date	DRAWING NUMBER
Drawn	JAR	8/22/08	2007-047-WB-001-01
Checked	BMC	8/22/08	
Approved	SMG	8/22/08	

Notes:
1. Bold green flow lines indicate waste water reuse. Stream F plus Stream J represents the water demand reduction due to internal recycling.
2. Utilities services provided by Refinery; not part of the 5th Train Project.
3. Reclaimed water supply.
4. The line letters correspond to those on Table 3-7 (Revised).

Figure 5.5-1 (Revised)

Water Balance Flow Diagram

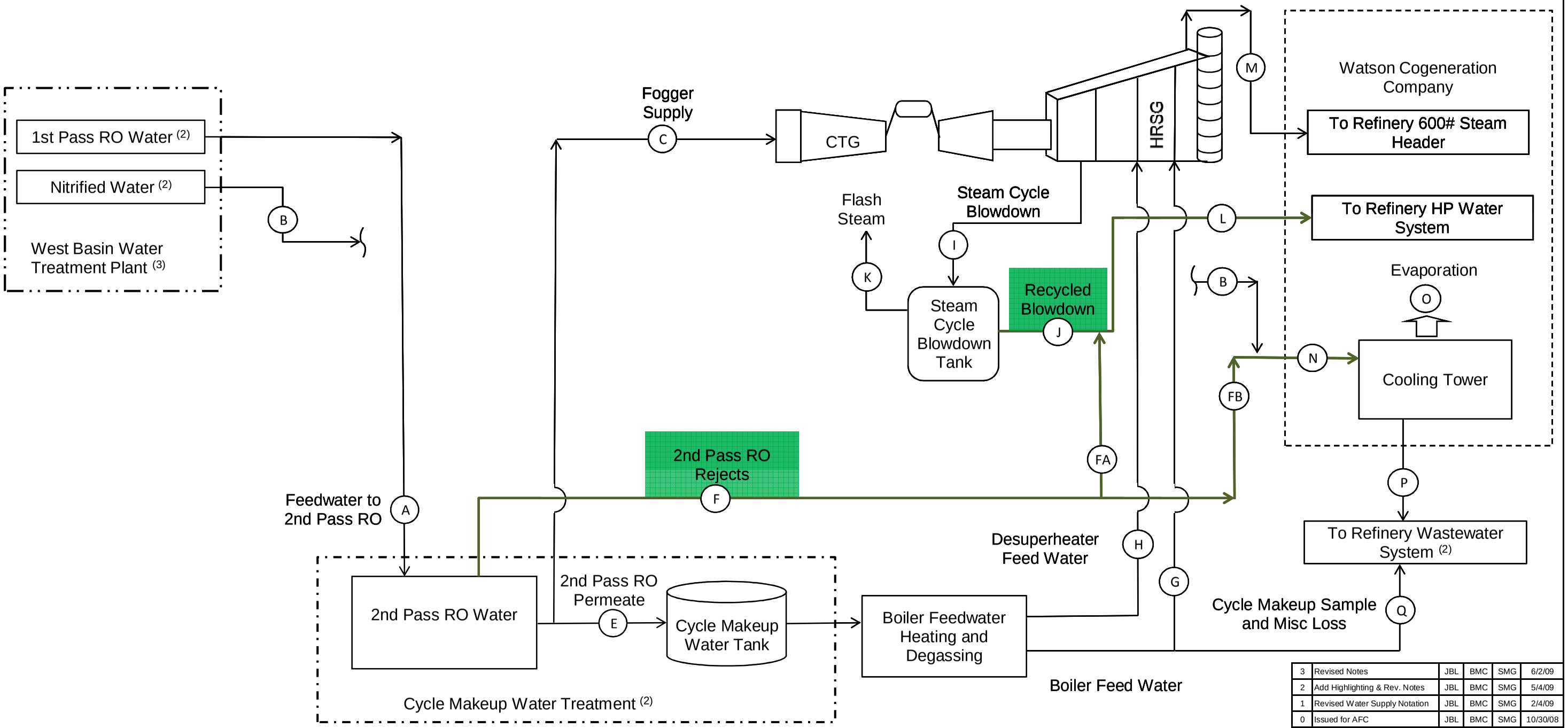

Rev	DESCRIPTION	Dwn	Chk	App	Date
3	Revised Notes	JBL	BMC	SMG	6/2/09
2	Add Highlighting & Rev. Notes	JBL	BMC	SMG	5/4/09
1	Revised Water Supply Notation	JBL	BMC	SMG	2/4/09
0	Issued for AFC	JBL	BMC	SMG	10/30/08

Watson Cogeneration Steam and Electric Reliability Project

Kiewit
8455 Lenexa Drive
Lenexa, Kansas 66214

WATER BALANCE FLOW DIAGRAM
FIGURE 5.5-1 (REVISED)

	by	date	DRAWING NUMBER
Drawn	JAR	8/22/08	2007-047-WB-001-01
Checked	BMC	8/22/08	
Approved	SMG	8/22/08	

Notes:
1. Bold green flow lines indicate waste water reuse. Stream F plus Stream J represents the water demand reduction due to internal recycling.
2. Utilities services provided by Refinery; not part of the 5th Train Project.
3. Reclaimed water supply.
4. The line letters correspond to those on Table 3-7 (Revised).

Table 3-7 (Revised)

Water Balance Flow Values

Table 3-7 (Revised)
Water Balance Flow Values

		Maximum Daily (gal/day)	Average Daily (gal/day)	Average Annual (acre-feet per year)
Water Supply				
A	First Pass RO water from WBMWD	2,583,360	2,548,800	2,855
B	Nitrified water from WBMWD	344,160	142,560	160
	Total	**2,927,520**	**2,691,360**	**3,015**
Internal Flows				
C	Fogger supply	72,000	43,200	48
D	Not Used	0	0	0
E	Second Pass RO permeate to cycle makeup tank	1,997,280	1,997,280	2,237
F	Second Pass RO rejects	514,080	508,320	569
FA	Second Pass RO reject to Refinery HP Water	264,960	259,200	290
FB	Second Pass RO reject to cooling tower cell	249,120	249,120	279
G	Cycle makeup to steam cycle	1,821,600	1,821,600	2,040
H	Cycle makeup to Fifth Train desuperheater	156,960	156,960	176
I	Steam cycle blowdown to blowdown tank	93,600	93,600	105
J	Steam Cycle Blowdown to Refinery HP Water	70,560	70,560	79
K	Vent steam from blowdown tank	23,040	23,040	26
L	Total to Refinery HP Water System	335,520	329,760	369
M	Process steam to facility header	1,884,960	1,884,960	2,111
N	Cooling tower cell makeup	593,280	391,680	439
O	Cooling tower cell evaporation	413,280	276,480	310
Wastewater				
P	Cooling tower cell blowdown	180,000	115,200	129
Q	Cycle makeup and miscellaneous losses	18,720	18,720	21
	Total	**198,720**	**133,920**	**150**
Internal Waste Streams to be Recycled to Reduce Water Demand				
F+ J	Second Pass RO Rejects Plus Steam Cycle Blowdown	584,640	578,880	648
	Percent of Total Water Supply	20.0%	21.5%	21.5%

Source: Kiewit Power Engineers Co., 2009.

Notes:

The maximum daily use is based on 24 hours of full load operation during the design hottest day (102ºF day/16% rh).

The average daily use is 24 hours of the average of the full load use at the average daily temperature (63.1ºF day/60% rh).

The average annual use is based on 8,760 hours/year at the average daily rate.
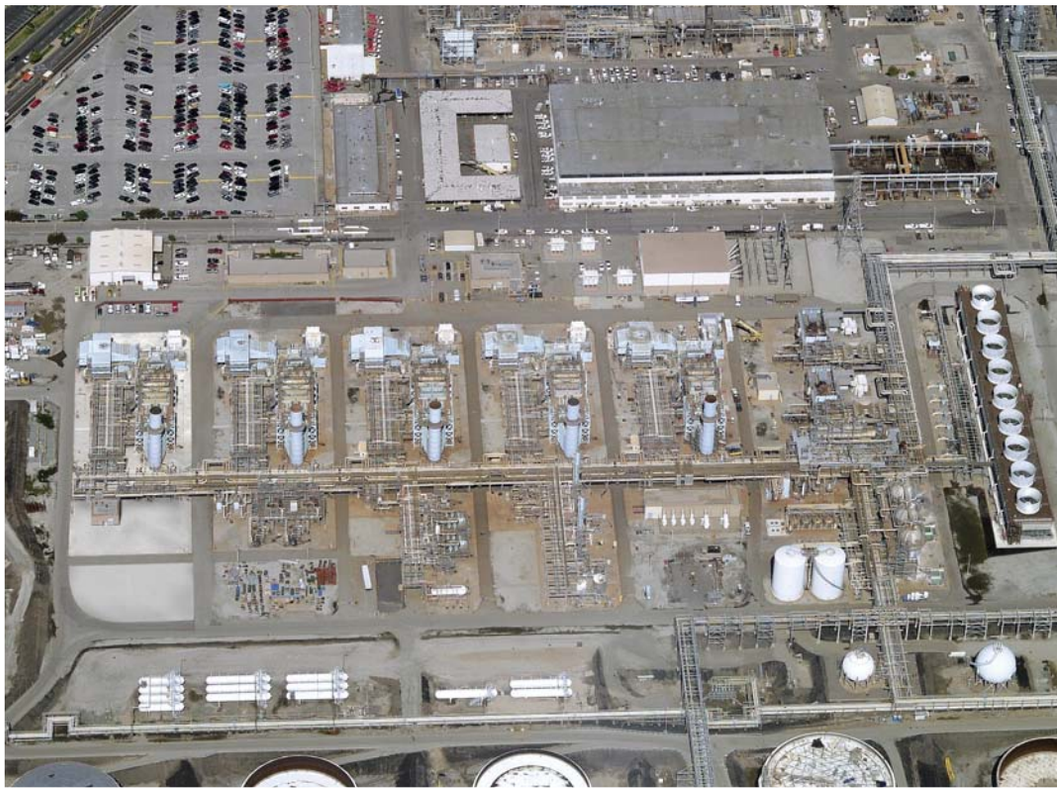
gal/day = gallons per day
HP = high pressure
rh = relative humidity
RO = reverse osmosis
WBMWD = West Basin Municipal Water District