AFC SUPPLEMENT

In Response to CEC Data Adequacy Review

Application for Certification (08-AFC-06) for WILLOW PASS GENERATING STATION Pittsburg, California

September 2008

Prepared for:

MIRANT℠
WILLOW PASS, LLC

Prepared by:

URS

Table of Contents

Data Adequacy Response Table

Appendices

Appendix A: BAAQMD Completeness Letter

Appendix B: Biological Resources

Appendix B1: Figure 7.2-1 (Revised)

Appendix B2: Agency Correspondence

Appendix C: Cultural Resources

Appendix C1: Qualifications

Appendix C2: Cultural Technical Reports (submitted under separate confidential cover)

Appendix D: Paleontological Resources

Appendix E: Soils

Appendix F: Transmission Systems Engineering

F1: Revised and New TSE Drawings

F2: System Impact Study (submitted under separate cover)

Appendix G: Visual Resources

Adequacy Issue: Adequate ___ Inadequate X

DATA ADEQUACY RESPONSE

Revision No. 0 Date July 12, 2008

Technical Area: **Air Quality** Project: Willow Pass Generating Station (WPGS) Technical Staff: Tuan Ngo

Project Manager: Michelle Woods Docket: 08-AFC-6 Technical Senior: Matthew Layton

ID	SITING REGULATIONS	INFORMATION	INFORMATION REQUIRED TO MAKE AFC CONFORM WITH REGULATIONS	RESPONSE
1	Appendix B (g) (8) (A)	The information necessary for the air pollution control district where the project is located to complete a Determination of Compliance.	Please submit an application for Authority to Construct and Permit to Operate to the Bay Area Air Quality Management District (District) and provide a completeness letter for the application from the District.	An application for Authority to Construct and Permit to Operate was submitted by mail to the BAAQMD on July 11, 2008. This application was also copied to Michelle Woods at the CEC. In addition, a CD of the application was submitted for docketing with the CEC on July 28, 2008. The BAAQMD issued the completeness letter on July 17, 2008. The completeness letter is included as Appendix A.

ID	SITING REGULATIONS	INFORMATION	INFORMATION REQUIRED TO MAKE AFC CONFORM WITH REGULATIONS	RESPONSE
2	Appendix B (b) (13) (A)	A regional overview and discussion of terrestrial and aquatic biological resources, with particular attention to sensitive biological resources within ten (10) miles of the project. Include a map at a scale of 1:100,000 (or other suitable scale) showing sensitive biological resource location(s) in relation to the project site and related facilities and any boundaries of a local Habitat Conservative Plan or similar open space land use plan or designation. Sensitive biological resources include the following:	Please provide a map of biological resources within 10 miles of the project site.	This map is provided in Appendix B1, Figure 7.2-1 (Revised).
3	Appendix B (b) (13) (E) (i)	All impacts (direct, indirect, and cumulative) to biological resources from project site preparation, construction activities, plant operation, maintenance, and closure. Discussion shall also address sensitive species habitat impacts from cooling tower drift and air emissions;	Please discuss impacts to sensitive species habitat from air emissions. Section 7.2.3 pg 7.2-26 only mentions that there will be impacts but does not state what the impacts are expected to be.	None of the special-status species or habitats in the study area are known to exhibit particular sensitivity to emissions or air pollution. All emissions of non-attainment pollutants and their precursors will be offset through purchased emission reduction credits at other locations in Contra Costa County. This is described in Section 7.1.3 of the AFC, and illustrated in Tables 7.1-27 and 7.1-28. As stated in Section 7.2.3, although the WPGS will contribute to cumulative increases in air emissions, direct and cumulative impacts on biological resources associated with these increases are expected to be less than significant.

Adequacy Issue:	Adequate	Inadequate	X	DATA ADEQUACY RESPONSE	Revision No.	0	Date	July 14, 2008
Technical Area:	**Biological Resources**			Project:	Willow Pass Generating Station (WPGS)		Technical Staff:	Laurel Cordonnier
Project Manager:	Michelle Woods			Docket:	08-AFC-6		Technical Senior:	Rick York

ID	SITING REGULATIONS	INFORMATION	INFORMATION REQUIRED TO MAKE AFC CONFORM WITH REGULATIONS	RESPONSE
4	Appendix B (g) (13) (F) (ii)	All off-site habitat mitigation and habitat improvement or compensation, and an identification of contacts for compensation habitat and management;	Please discuss the need for offsite habitat mitigation or habitat improvement or compensation. Please provide contacts regarding the offsite habitat mitigation.	Offsite habitat mitigation for biological resource impacts is not required for the WPGS. As explained in Section 7.2.2.1 of the AFC, impacts to wetlands and other biological resources as a result of the project would be minor and temporary in nature. Wetlands and other habitats that will be temporarily disturbed have been subject to prior disturbance and as a result are not of high ecological value. Areas to be temporarily disturbed currently support herbaceous vegetation that will re-establish relatively quickly. In-place restoration of disturbed ground following construction will be sufficient to reduce impacts to a less than significant level and no offsite habitat mitigation is needed or proposed. Mitigation measures that would be implemented to ensure impacts on biological resources would be less than significant are described in Section 7.2.4. As no offsite mitigation is needed no offsite contacts are identified.

ID	SITING REGULATIONS	INFORMATION	INFORMATION REQUIRED TO MAKE AFC CONFORM WITH REGULATIONS	RESPONSE
5	Appendix B (g) (13) (H)	Submit copies of any preliminary correspondence between the project applicant and state and federal resource agencies regarding whether federal or state permits from other agencies such as the U.S. Fish and Wildlife Service, the National Marine Fisheries Service, the U.S. Army Corps of Engineers, the California Department of Fish and Game, and the Regional Water Quality Control Board will be required for the proposed project.		An email was received from Michelle Woods of the CEC on September 4, 2008 requesting the following items for data adequacy: 1) Contact with the correct USFWS branch and CDFG office 2) Contact information (name, phone number, e-mail if possible) for the person they contact at CDFG and USFWS 3) A report of the discussion The contact information for CDFG is: • Sandy Brunson CDFG Bay Delta Region (Region 3) PO BOX 47, Yountville, CA 94599 Tel: 707-944-5500 Email: sbrunson@dfg.ca.gov The contact information for USFWS is: • Ryan Olah, Branch Chief USFWS Coast Bay Delta Branch 3310 El Camino Avenue #120, Sacramento, CA 9582 Tel: 916-414-6623 Email: ryan_olah@fws.gov Please see Appendix B2 for a report of the communications with these agencies.

Adequacy Issue:	Adequate	Inadequate	X	DATA ADEQUACY RESPONSE	Revision No.	0	Date	July 15, 2008

Technical Area:	**Cultural Resources**	Project:	Willow Pass Generating Station (WPGS)	Technical Staff:	Amanda Blosser
Project Manager:	Michelle Woods	Docket:	08-AFC-6	Technical Senior:	Rick York

ID	SITING REGULATIONS	INFORMATION	INFORMATION REQUIRED TO MAKE AFC CONFORM WITH REGULATIONS	RESPONSE
6	Appendix B (g) (2) (B)	Copies of California Department of Parks and Recreation (DPR) 523 forms (Title 14 CCR §4853) shall be provided for all cultural resources (ethnographic, architectural, historical, and archaeological) identified in the literature search as being 45 years or older or of exceptional importance as defined in the National Register Bulletin Guideline, (36CFR60.4(g)). A copy of the USGS 7.5' quadrangle map of the literature search area delineating the areas of all past surveys and noting the California Historical Resources Information System (CHRIS) identifying number shall be provided. Copies also shall be provided of all technical reports whose survey coverage is wholly or partly within .25 mile of the area surveyed for the project under Section (g)(2)(C), or which report on any archaeological excavations or architecture surveys within the literature search area.	Please provide the qualifications for the literature researcher/directors. Please provide copies, under confidential cover, of all technical reports whose survey coverage is wholly or partly within the .25 mile of the area surveyed for the project or copies of any studies reporting on any archeological excavations or architectural surveys within the literature search area. The technical reports that appeared to be missing are: S-009095, 009214, 009583, 010268, 013256, 013831, 017890, 017993, 018352, 018440, 022464, 022929, 022930, 024322, 024323, 024986, 030387, 030579, 031375, 032182, 034161, 034182.	Copies of these qualifications are provided in Appendix C1. Copies of all requested technical reports within 0.25 miles of the project area have been made, with one exception. Technical report S-017890 was not included as part of the original record search, however, S-017893 was included and a copy of this report has been provided. It is assumed that the request for S-017890 was intended to be referenced as S-017893. In most cases complete copies of the entire technical reports are provided. However, only partial copies of S-17993 and S-31375 are included. These reports cover broad scale linear studies that encompass areas significantly larger that the WPGS study area. For these reports, only information pertinent to the WPGS was copied and is included. Copies of these technical reports are included in Appendix C2 submitted under separate confidential cover.

Adequacy Issue: Adequate ____ Inadequate X

DATA ADEQUACY RESPONSE

Revision No. 0 Date July 15, 2008

Technical Area: **Cultural Resources** Project: Willow Pass Generating Station (WPGS) Technical Staff: Amanda Blosser

Project Manager: Michelle Woods Docket: 08-AFC-6 Technical Senior: Rick York

ID	SITING REGULATIONS	INFORMATION	INFORMATION REQUIRED TO MAKE AFC CONFORM WITH REGULATIONS	RESPONSE
7	Appendix B (g) (2) (C)	The results of new surveys or surveys less than 5 years old shall be provided if survey records of the area potentially affected by the project area more than five (5) years old. Surveys to identify new cultural resources must be completed by (or under the direction of) individuals who meet the Secretary of the Interior's Professional Standards for the technical area addressed.	Please provide the qualifications for the archeological surveyors or directors.	Copies of these qualifications are provided in Appendix C1.
8	Appendix B (g) (2) (C) (v)	The names and qualifications of the cultural resources specialists who contributed to and were responsible for literature searches, surveys, and preparation of the technical report.	Please provide the qualifications for the literature searches, surveys, and preparation of the technical reports.	Copies of these qualifications are provided in Appendix C1.

ID	SITING REGULATIONS	INFORMATION	INFORMATION REQUIRED TO MAKE AFC CONFORM WITH REGULATIONS	RESPONSE
9	Appendix B (g) (16) (B)	A discussion of the sensitivity of the project area described in subsection (g)(16)(A) and the presence and significance of any known paleontological localities or other paleontologic resources within or adjacent to the project. Include a discussion of sensitivity for each geologic unit identified on the most recent geologic map at a scale of 1:24,000. Provide rationale as to why the sensitivity was assigned.	Please discuss the sensitivity of each individual geologic unit, and why the sensitivity was assigned.	Each of the geologic units is assigned a paleontologic sensitivity rating based on the results of field survey and also archival research. These are described in Appendix D.

ID	SITING REGULATIONS	INFORMATION	INFORMATION REQUIRED TO MAKE AFC CONFORM WITH REGULATIONS	RESPONSE
10	Appendix B (g) (16) (C)	A summary of all local museums, literature searches and field surveys used to provide information about paleontological resources in the project area described in subsection (g)(16)(A). Identify the dates of the surveys, methods used in completing the surveys, and the names and qualifications of the individuals conducting the surveys.	Please list or otherwise discuss museums, literature resources and field surveys that were conducted. Please identify the dates of the surveys.	As described in AFC Section 7.16.1.3, an archival database search was executed by the University California Museum of Paleontology at Berkeley (UCMP) on April 29, 2008. Dr. Joe D. Stewart of URS also reviewed geologic maps and reports, and aerial photographs covering the project vicinity. In addition, Dr. Stewart consulted the inventories of recorded Pleistocene vertebrate fossils for the state of California (Jefferson 1991a & b). As all of the sediments in the area are from the Pleistocene or Holocene epochs, no publications on older fossils were consulted. Dr. Stewart also conducted a field survey on June 7, 2008. Some areas of native sediment were observed within the Pittsburg Power Plant boundaries, but no fossils were observed. The route of the proposed water supply and wastewater discharge pipelines was also surveyed, where possible, for native sediments; this survey was limited in some locations as a result of the urban land uses in the vicinity of the route, including the presence of residences, railway facilities and paved streets and sidewalks.

Adequacy Issue:	Adequate		Inadequate	X	DATA ADEQUACY RESPONSE	Revision No.	0	Date	July 16, 2008
Technical Area:	**Soils**				Project:	Willow Pass Generating Station (WPGS)		Technical Staff:	Richard Latteri
Project Manager:	Michelle Woods				Docket:	08-AFC-6		Technical Senior:	Paul Marshall

ID	SITING REGULATIONS	INFORMATION	INFORMATION REQUIRED TO MAKE AFC CONFORM WITH REGULATIONS	RESPONSE
11	Appendix B (g) (15) (B) (ii)	The effect of power plant emissions on surrounding soil-vegetation systems.	Please provide a discussion of the effects of power plant emissions such as NOx and SOx on the surrounding soil-vegetation system regardless of site and adjacent land uses.	Please see Appendix E for response.

ID	SITING REGULATIONS	INFORMATION	INFORMATION REQUIRED TO MAKE AFC CONFORM WITH REGULATIONS	RESPONSE
12	Appendix B (h) (2) (B)	A discussion of the extent to which the proposed electric transmission facilities have been designed, planned, and routed to meet the transmission requirements created by additional generating facilities planned by the applicant or any other entity.	Provide a physical layout drawing (or resubmit Figure 4-1 showing the route of the proposed 230 kV overhead interconnection line between the proposed Willow Pass Generating Station (WPGS) 230 kV switchyard and existing Pittsburg Power Plant PG&E 230 kV switchyard.	Please see Appendix F1, Revised Figure 4-1, which shows the proposed interconnection line between the WPGS and the existing Pittsburg Power Plant PG&E switchyard.

ID	SITING REGULATIONS	INFORMATION	INFORMATION REQUIRED TO MAKE AFC CONFORM WITH REGULATIONS	RESPONSE
13	Appendix B (b) (2) (C)	A detailed description of the design, construction, and operation of any electric transmission facilities, such as power lines, substations, switchyards, or other transmission equipment, which will be constructed or modified to transmit electrical power from the proposed power plant to the load centers to be served by the facility. Such description shall include the width of rights of way and the physical and electrical characteristics of electrical transmission facilities such as towers, conductors, and insulators.	Please provide a complete electrical one-line diagram (or resubmit Figure 2.5-4) of the proposed WPGS 230 kV switchyard showing all equipment for all new generators' interconnection with the switchyard including any bus duct connectors or cables, 13.8/16.5 kV switchgear & breakers on the low side, generator step-up transformers, short overhead conductors and/or cables from the transformers to the switchyard with the configurations for buses, breakers, disconnect switches on the 230 kV side, and their respective sizes and/or ratings, along with the proposed transmission outlet from the switchyard.	Please see Appendix F1, Figure 2.5-4 (Revised) and Figure F-1, which provide single line diagrams for Power Blocks 1 and 2. In addition, Figure F-2 provides the overall plant single line diagram and Figure F-3 shows the transmission outlet.
			Please provide a one-line electrical diagram showing the pre-project Pittsburg Power Plant PG&E 230 kV switchyard with existing generator units and transmission outlets with the configuration for buses, breakers and disconnect switches and their respective ratings.	Please see Appendix F1, Figure F-4
			Also, please provide a one-line electrical diagram showing the post-project Pittsburg Power Plant PG&E 230 kV switchyard with the proposed 230 kV tie line interconnection facilities for buses, breakers and disconnect switches and their respective ratings.	Please see Appendix F1, Figure F-3
			Please provide physical layout drawings of the pre and post-project Pittsburg Power Plant Switchyard showing all major equipment and transmission outlets.	Please see Appendix F1, Figure F-5, which shows the pre-project Pittsburg Power Plant layout. Also see Figure 4-1 (Revised), which shows the WPGS and PG&E switchyard layout. No additional modifications will need to be made to the existing switchyard.

ID	SITING REGULATIONS	INFORMATION	INFORMATION REQUIRED TO MAKE AFC CONFORM WITH REGULATIONS	RESPONSE
14	Appendix B (b) (2) (D)	A description of how the route and additional transmission facilities were selected, and the consideration given to engineering constraints, environmental impacts, resource conveyance constraints, and electric transmission constraints.	Please describe how the route of the proposed 230 kV tie line within the Pittsburg Power Plant switchyard is selected by comparing with any alternate routes and their environmental impacts.	Since the new generating units are adjacent to the existing 230kV Pittsburg switchyard no alternate routings were considered. Routing the high voltage lines to a different substation would not be efficient or logical and could have additional environmental impacts when compared to the proposed route, as this would require the construction of a longer connection partially located outside of the existing Pittsburg Power Plant site. The proposed route is the shortest between the WPGS and PG&E switchyard and would be constructed entirely within a developed area of the existing Pittsburg Power Plant site. The proposed route also includes the reuse of existing equipment in the PG&E switchyard to further minimize any potential environmental impacts during construction.

ID	SITING REGULATIONS	INFORMATION	INFORMATION REQUIRED TO MAKE AFC CONFORM WITH REGULATIONS	RESPONSE
15	Appendix B (b) (2) (E)	A complete System Impact Study or signed System Impact Study Agreement with the California Independent System Operator (CA ISO) and proof of payment. When not connecting to the California Independent System Operator controlled grid, provide the executed System Impact Study agreement and proof of payment to the interconnecting utility. If the interconnection and operation of the proposed project will likely impact a transmission system that is not controlled by the interconnecting utility (or California Independent System Operator), provide evidence of a System Impact Study or agreement and proof of payment (when applicable) with/to the impacted transmission owner or provide evidence that there are no system impacts requiring mitigation.	Please submit a signed System Impact Study (SIS) agreement with the CA ISO and its proof of payment with a study plan or a completed SIS report based on studies for the 2012 summer peak and a spring system conditions.	Submitted under separate cover as Appendix F2.

Adequacy Issue:	Adequate	Inadequate	X	DATA ADEQUACY RESPONSE	Revision No.	0	Date	July 14, 2008
Technical Area:	**Visual Resources**			Project:	Willow Pass Generating Station (WPGS)		Technical Staff:	James Adams
Project Manager:	Michelle Woods			Docket:	08-AFC-6		Technical Senior:	Paula David

ID	SITING REGULATIONS	INFORMATION	INFORMATION REQUIRED TO MAKE AFC CONFORM WITH REGULATIONS	RESPONSE
16	Appendix B (g)(6)(E)	Provide the cooling tower and heat recovery steam generator (HRSG) exhaust design parameters that affect visible plume formation. For the cooling tower, data shall include heat rejection rate, exhaust temperature, exhaust mass flow rate, liquid to gas mass flow ratio, and if the tower is plume-abated, moisture content (percent by weight) or plume-abated fogging curve(s). The parameters shall account for a range of ambient conditions (temperature and relative humidity) and proposed operating scenarios, such as duct firing and shuttling down individual cells. For the heat recovery steam generator exhausts, data shall include moisture content (percent by weight), exhaust mass flow rate, and exhaust temperature. The parameters must correspond to full-load operating conditions at specified ambient conditions, and shall account for proposed operating scenarios, such as power augmentation (i.e., evaporative coolers, inlet foggers, or steam injection) and duct firing, or proposed HRSG visible plume abatement, such as the use of an economizer bypass. For simple-cycle projects, provide analogous data for the exhaust stack(s).	For the heat recovery steam generator exhausts, please provide data that shall include moisture content (percent by weight), exhaust mass flow rate, and exhaust temperature. The parameters must correspond to full-load operating conditions at specified ambient conditions, and shall account for proposed operating scenarios, such as power augmentation (i.e., evaporative coolers, inlet foggers, or steam injection) and duct firing, or proposed HRSG visible plume abatement, such as the use of an economizer bypass.	The requested information on the Flex Plant 10 turbine/HRSG trains is provided in a table on page J4-1 of the AFC Appendix J4, Operational Emissions. With respect to exhaust moisture content, the table provides the water mass in the exhaust stream in lb/hour and the total mass exhaust flow, (which can easily be converted to moisture percent by weight) for each ambient temperature condition and load (including full load), with and without power augmentation and evaporative cooling. Stack exhaust temperature is also presented for each case. There is no duct firing in the proposed Flex Plant 10s. No HRSG visible plume abatement measures are considered necessary.

ID	SITING REGULATIONS	INFORMATION	INFORMATION REQUIRED TO MAKE AFC CONFORM WITH REGULATIONS	RESPONSE
17	Appendix B (i) (1) (B)	Tables which identify each agency with jurisdiction to issue applicable permits, leases, and approvals or to enforce identified laws, regulations, standards, and adopted local, regional, state and federal land use plans, and agencies which would have permit approval or enforcement authority, but for the exclusive authority of the commission to certify sites and related facilities.	Please provide a table which identifies each agency with jurisdiction to issue applicable permits, leases, and approvals or to enforce identified laws, regulations, standards, and adopted local, regional, state and federal land use plans, and agencies which would have permit approval or enforcement authority, but for the exclusive authority of the commission to certify sites and related facilities.	Please see Appendix G, Table 7.11-8 (Revised).
18	Appendix B (i) (2)	The name, title, phone number, address (required), and email address (if known), of an official who was contacted within each agency, and also provide the name of the official who will serve as a contact person for Commission staff.	Please provide the name, title, phone number, address (required), and email address (if known), of an official who was contacted within each agency, and also provide the name of the official who will serve as a contact person for Commission staff.	Please see Appendix G, Table 7.11-8 (Revised).

Appendix A: BAAQMD Completeness Letter

BAY AREA
AIR QUALITY
MANAGEMENT
DISTRICT
SINCE 1955

ALAMEDA COUNTY
Tom Bates
Scott Haggerty
Janet Lockhart
Nate Miley

CONTRA COSTA COUNTY
John Gioia
Mark Ross
Michael Shimansky
Gayle B. Uilkema

MARIN COUNTY
Harold C. Brown, Jr.

NAPA COUNTY
Brad Wagenknecht
(Secretary)

SAN FRANCISCO COUNTY
Chris Daly
Jake McGoldrick
Gavin Newsom

SAN MATEO COUNTY
Jerry Hill
(Chair)
Carol Klatt

SANTA CLARA COUNTY
Erin Garner
Yoriko Kishimoto
Liz Kniss

SOLANO COUNTY
John F. Silva

SONOMA COUNTY
Tim Smith
Pamela Torliatt
(Vice-Chair)

Jack P. Broadbent
EXECUTIVE OFFICER/APCO

July 17, 2008

John Lague
URS Corporation
1615 Murray Canyon Road, Suite 1000
San Diego, California 92108

Application Number: 18542
Plant Number: 19203
Equipment Location:
Willow Pass Generating Station
Pittsburg, CA 94565

Dear Mr. Lague

We are pleased to inform you that your application has been assigned the above application number and is now considered to be complete as of July 14, 2008, the date in which your application was received. In accordance with Regulation 2, Rule 3, the District shall conduct a Preliminary Determination of Compliance Review within 180 days of accepting a Determination of Compliance/Authority to Construct application as complete.

Please note that the District may request additional information deemed necessary to complete review of your application.

Please include your application number with any correspondence with the District. If you have any further questions, please call me at **(415) 749-4796, Fax: 415 749-5030.**

Sincerely,

Weyman Lee
Senior Air Quality Engineer

CC: Ronald Kino, Mirant California

Spare the Air

The Air District is a Certified Green Business
Printed using soy-based inks on 100% post-consumer recycled content paper

San Francisco Green Business

939 ELLIS STREET • SAN FRANCISCO CALIFORNIA 94109 • 415.771.6000 • WWW.BAAQMD.GOV

BAY AREA
AIR QUALITY
MANAGEMENT
DISTRICT
SINCE 1955

ALAMEDA COUNTY
Tom Bates
Scott Haggerty
Janet Lockhart
Nate Miley

CONTRA COSTA COUNTY
John Gioia
Mark Ross
Michael Shimansky
Gayle B. Uilkema

MARIN COUNTY
Harold C. Brown, Jr.

NAPA COUNTY
Brad Wagenknecht
(Secretary)

SAN FRANCISCO COUNTY
Chris Daly
Jake McGoldrick
Gavin Newsom

SAN MATEO COUNTY
Jerry Hill
(Chair)
Carol Klatt

SANTA CLARA COUNTY
Erin Garner
Yoriko Kishimoto
Liz Kniss

SOLANO COUNTY
John F. Silva

SONOMA COUNTY
Tim Smith
Pamela Torliatt
(Vice-Chair)

Jack P. Broadbent
EXECUTIVE OFFICER/APCO

July 17, 2008

Michelle Woods
Siting Project Manager
California Energy Commission
1516 9th Street, MS-15
Sacramento, CA 95814

Subject: Willow Pass Generating Station
Pittsburg, CA 94565
Plant No. 19203, Application No. 18542

Dear Ms. Woods:

The Bay Area Air Quality Management District has completed a preliminary review of the Determination of Compliance/Authority to Construct Application submitted by Mirant Willow Pass, LLC for the Willow Pass Generating Station. The District has determined that the information contained therein is sufficient to undertake a Determination of Compliance review. In addition, the District may request from the applicant any additional information deemed necessary for the completion of the Determination of Compliance review.

If you have any questions on this matter please call **Weyman Lee, Senior Air Quality Engineer at (415) 749-4796.**

Sincerely,

Barry G. Young

Barry G Young
Air Quality Engineering Manager
Permit Evaluation Section
Engineering Division

Cc: John Lague, URS
Ronald Kino, Mirant California

BGY:wl

Spare the Air

The Air District is a Certified Green Business
Printed using soy-based inks on 100% post-consumer recycled content paper

Appendix B: Biological Resources

Appendix B1: Figure 7.2-1 (Revised)

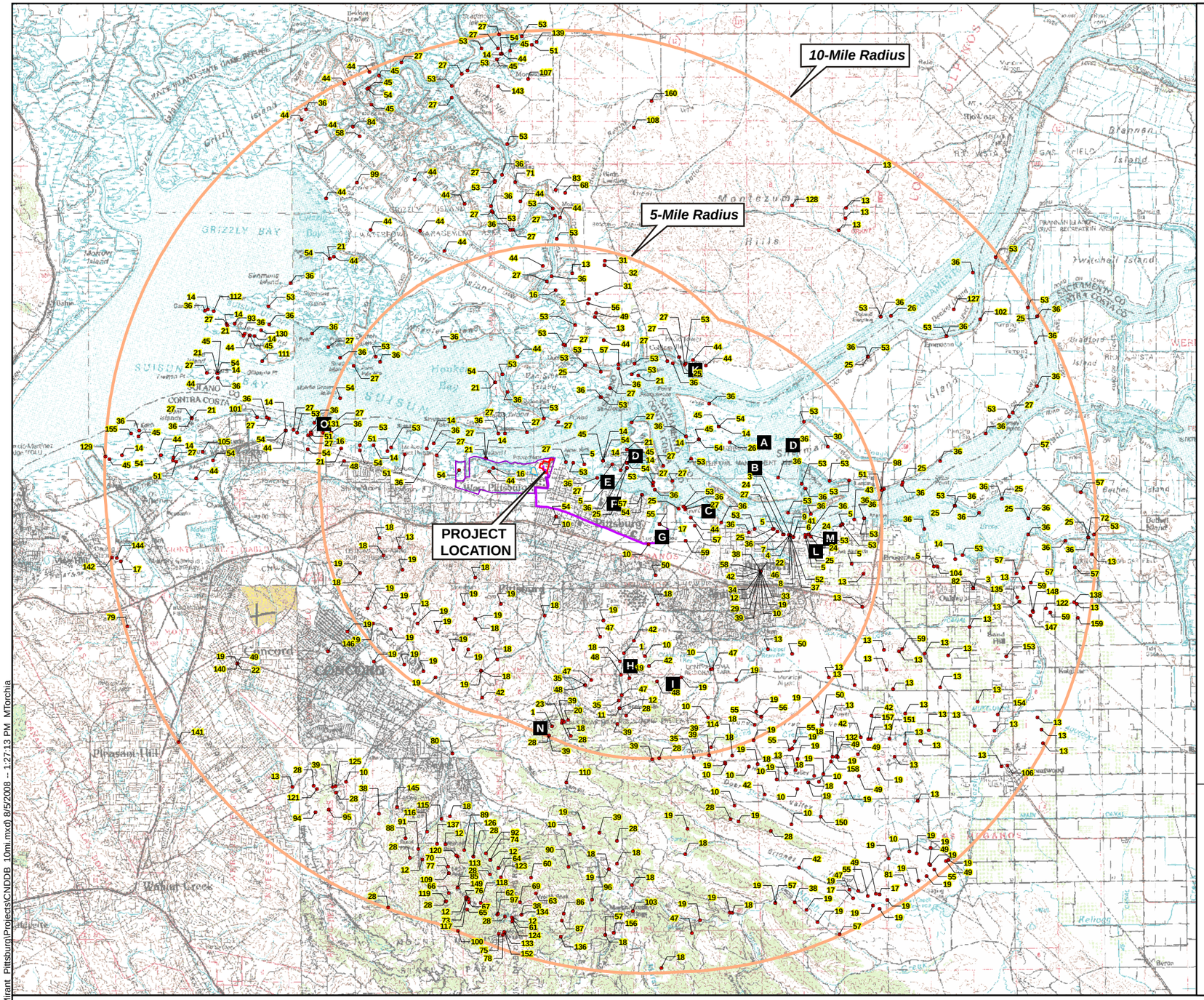

Special-Status Species (CNDDB)

1 Alameda whipsnake
10 big tarplant
100 Mt. Diablo jewel-flower
101 California clapper rail
102 giant garter snake
103 Mt. Diablo fairy-lantern
104 silvery legless lizard
105 California clapper rail
106 molestan blister beetle
107 Carquinez goldenbush
108 midvalley fairy shrimp
109 Mt. Diablo jewel-flower
11 Blennosperma vernal pool andrenid bee
110 Butte County morning-glory
111 Sacramento splittail
112 Sacramento splittail
113 coast (California) horned lizard
114 silvery legless lizard
115 Mt. Diablo fairy-lantern
116 Mt. Diablo fairy-lantern
117 Mt. Diablo fairy-lantern
118 Mt. Diablo fairy-lantern
119 Mt. Diablo fairy-lantern
12 Brewer's western flax
120 Hospital Canyon larkspur
121 Hall's bush-mallow
122 Swainson's hawk
123 chaparral harebell
124 chaparral harebell
125 Brandegee's eriastrum
126 chaparral harebell
127 great blue heron
128 Carquinez goldenbush
129 California clapper rail
13 burrowing owl
130 California clapper rail
131 California clapper rail
132 brittlescale
133 coastal triquetrella
134 San Bruno elfin butterfly
135 loggerhead shrike
136 most beautiful jewel-flower
137 Hall's bush-mallow
138 Swainson's hawk
139 Carquinez goldenbush
14 California black rail
140 hoary bat
141 hoary bat
142 Congdon's tarplant
143 pappose tarplant
144 northwestern pond turtle
145 coast (California) horned lizard
146 pallid bat
147 silvery legless lizard
148 silvery legless lizard
149 chaparral harebell
150 American badger
151 Swainson's hawk
152 slender silver moss
153 Swainson's hawk
154 Swainson's hawk
155 California clapper rail
156 pallid bat
157 American badger
158 American badger
159 Swainson's hawk
16 California least tern
160 pappose tarplant
17 California linderiella
18 California red-legged frog
19 California tiger salamander
2 alkali milk-vetch
20 chaparral ragwort
21 Coastal Brackish Marsh
22 Contra Costa goldfields
23 Contra Costa manzanita
24 Contra Costa wallflower
25 Delta mudwort
26 Delta smelt
27 Delta tule pea
28 Diablo helianthella
29 diamond-petaled California poppy
3 Antioch andrenid bee
30 double-crested cormorant
31 dwarf downingia
32 fragrant fritillary
33 Hoover's cryptantha
34 Hurd's metapogon robberfly
35 large-flowered fiddleneck
36 Mason's lilaeopsis
37 Middlekauff's shieldback katydid
38 Mt. Diablo buckwheat
39 Mt. Diablo manzanita
4 Antioch Dunes anthicid beetle
41 redheaded sphecid wasp
42 round-leaved filaree
43 Sacramento perch
44 salt-marsh harvest mouse
45 saltmarsh common yellowthroat
46 San Joaquin dune beetle
47 San Joaquin kit fox
48 San Joaquin pocket mouse
49 San Joaquin spearscale
5 Antioch Dunes evening-primrose
50 showy madia
51 soft bird's-beak
52 Stabilized Interior Dunes
53 Suisun Marsh aster
54 Suisun song sparrow
55 vernal pool fairy shrimp
56 vernal pool tadpole shrimp
57 western pond turtle
58 western red bat
59 white-tailed kite
6 Antioch Dunes halcitid bee
60 Mt. Diablo jewel-flower
61 Mt. Diablo jewel-flower
62 rock sanicle
63 rock sanicle
64 Mt. Diablo jewel-flower
65 Mt. Diablo jewel-flower
66 Mt. Diablo jewel-flower
67 Serpentine Bunchgrass
68 Carquinez goldenbush
69 Mt. Diablo phacelia
7 Antioch efferian robberfly
70 Mt. Diablo phacelia
71 tricolored blackbird
72 woolly rose-mallow
73 Mt. Diablo bird's-beak
74 Hospital Canyon larkspur
75 Mt. Diablo phacelia
76 most beautiful jewel-flower
77 rock sanicle
78 rock sanicle
79 Congdon's tarplant
8 Antioch multilid wasp
80 caper-fruited tropidocarpum
81 molestan blister beetle
82 curved-foot hygrotus diving beetle
83 brittlescale
84 Suisun shrew
85 rock sanicle
86 Bridges' coast range shoulderband
87 Mt. Diablo phacelia
88 Mt. Diablo fairy-lantern
89 Mt. Diablo fairy-lantern
9 Antioch specid wasp
90 Mt. Diablo fairy-lantern
91 Mt. Diablo fairy-lantern
92 Mt. Diablo fairy-lantern
93 California clapper rail
94 Mt. Diablo fairy-lantern
95 Mt. Diablo fairy-lantern
96 Mt. Diablo fairy-lantern
97 Mt. Diablo fairy-lantern
98 giant garter snake
99 short-eared owl

Areas of Concern

A. Sherman Lake
B. Sherman Island Water Flow Management Area
C. Kimball Island
D. Winter Island
E. Browns Island
F. New Yourk Slough
G. DOW Wetlands Preserve
H. Black Diamond Mines Regional Preserve
I. Contra Loma Regional Park & Reservoir
J. Mouth of Contra Costa Channel
K. Montezuma Habitat Enhancement Site
L. Sardis Unito of the Antioch Dunes National Wildlife Refuge
M. Antioch Sand Dunes
N. Nortonville - Somersville
O. Shorline Bewtween Martinez Waterfront & Concord Naval Weapons Station

LEGEND

- Pittsburg Power Plant Boundary
- Willow Pass Generating Station Site
- Construction Laydown Area
- Water Supply and Discharge Pipeline Route
- 5- and 10-Mile Radius

0 1 2 4
Scale in Miles

N

REGIONAL OVERVIEW OF SPECIAL-STATUS SPECIES AND AREAS OF SIGNIFICANT BIOLOGICAL RESOURCES: 10-MILE RADIUS (CNDDB)

September 2008
28067343

Willow Pass Generating Station
Mirant Willow Pass, LLC
Pittsburg, California

URS

FIGURE 7.2-1 (REVISED)

Map Document: (U:\GIS\Mirant_Pittsburg\Projects\CNDDB_10mi.mxd) 8/5/2008 -- 1:27:13 PM MTorchia

9/23/08 vsa ..\T:\Mirant Pittburg-Willow Pass\Graphics\Data Adequacy\REV_7.2-1_reg CNDDB.ai

Appendix B2: Agency Correspondence

Michelle_Havens@fws.gov
09/09/2008 07:25 AM

To Gilda_Barboza@URSCorp.com
cc
Subject Re: Contact information for new permit application

Gilda,

I'd be glad to answer any questions about the consultation process for you, however, the request for initiation of consultation itself should go to Ryan Olah (at the address below), who will assign it to someone within the Coast Bay Delta Branch.

Unfortunately, the workload in this office is very high, and we are low on personnel right now. Most consultations take somewhere between 6-12 months to complete, so I would plan to initiate consultation at least one year in advance.

My phone number and contact information can be found below.

Thanks,
Michelle

****
Michelle Havens
Fish and Wildlife Biologist
Sacramento Fish and Wildlife Office
U.S. Fish and Wildlife Service
2800 Cottage Way Room W-2605
Sacramento, CA 95825
(916) 414-6496
Michelle_Havens@fws.gov
****

Gilda_Barboza@URSCorp.com

09/08/2008 01:03 PM

To Michelle_Havens@fws.gov
cc
Subject Contact information for new permit application

Michelle,

I am sending you this email to follow up with a voice message I left you last Friday (9/5).

We are currently working with the CEC on behalf of our client, and as part of this are planning to initiate Section 7 consultation for potential temporary impacts to California red-legged frogs from a potential pipeline project within the City of Pittsburg, in Contra Costa County. We are making this initial contact in order give the Energy Commission staff a brief perspective of the filing process for scheduling purposes. We would like to know if there may be a particular contact person with whom we could contact with any questions regarding the consultation process.

If there is, in fact, a particular person we may contact, could you please let me know their Name, Phone number, and E-mail.
I appreciate any help you may give me.

Thank you,

A. Gilda Barboza

URS Corporation
133 Broadway, Suite 800
Oakland, CA 94612
Tel: 510.874.1760
Fax: 510.874.3268
Gilda_Barboza@URSCorp.com

This e-mail and any attachments are confidential. If you receive this message in error or are not the intended recipient, you should not retain, distribute, disclose or use any of this information and you should destroy the e-mail and any attachments or copies.

URS

DATE: 08/05/08 TIME: 2:30 p.m.	**TELEPHONE MEMORANDUM**	JOB NO: COST CODE:
(TO) (FROM): Sandy Brunson		ROUTING
COMPANY: California Dept. Fish and Game		
PHONE NO.: (707) 944-5500		
RECORDED BY: A. Gilda Barboza		
PROJECT NAME: Energy Commission- Willow Pass Generating Station		

This conversation involved URS biologist, Gilda Barboza, and Sandy Brunson at the California Department of Fish and Game (CDFG) – Bay Delta Region 3. This conversation took place to obtain a contact person at CDFG in order to begin all preliminary investigations for a Streambed Alteration Agreement. The request was put forth so to have available information to provide the Energy Commission staff a brief perspective of the filing process for their scheduling purposes.

Per the conversation, Ms. Brunson mentioned that the CDFG will need to first review the application for the 1600 Streambed Alteration Agreement, at which time an application acceptance letter will be sent to the applicant. The letter will discuss the assigned CDFG contact person, a notification number, and timelines. Until then, all questions regarding the application process may be referred to Sandy Brunson, or any general biologist at the CDFG Bay Delta Region.

Appendix C: Cultural Resources

Appendix C1: Qualifications

APPENDIX C1
ARCHAEOLOGIST QUALIFICATIONS

The archaeological inventory efforts (surveys and literature searches) were carried out under the supervision of URS Corporation (URS) Principal Archaeologist Mr. Michael Kelly, who meets the Secretary of the Interior's Standards and Guidelines for Archaeology and Historic Preservation (National Park Service 1983), and is consistent with the procedures for compliance with Section 106 of the NHPA, set forth at 36 Code of Federal Regulations (CFR) 800.

URS Senior Project Archaeologist Mr. Mark Hale requested the literature search and, along with Leroy Laurie, URS Staff Archaeologist, conducted the archaeological inventory of the WPGS property and the route of the offsite waterlines.

AREAS OF EXPERTISE

- Cultural Resources
- Archaeology

EDUCATION

Completed coursework, examinations, and research towards M.A. in Cultural Resources Management, Sonoma State University.

B.A. (1983), Anthropology, University of California, Berkeley

REGISTRATIONS/ SPECIAL TRAINING

OSHA Hazardous Waste Operations (40-Hour), Ecologics Training Institute.

OSHA Hazardous Waste Operations Supervisor (8-Hour), Dames & Moore.

Introduction to Federal Projects and Historic Preservation Law, The Advisory Council on Historic Preservation.

FIRM AFFILIATION

URS

PROFESSIONAL HISTORY

Dames & Moore, San Francisco, California, 1990 to present.

Crew Chief, Mountain Anthropological Research, 1990.

REPRESENTATIVE EXPERIENCE

Responsible for directing and supervising cultural resources studies in northern California, other western states, and Pacific territories. Duties include report preparation, analysis, field supervision, construction monitoring, and proposal preparation. Joined URS in 1990.

Cultural Resources Task Leader , 2006-2007

- Elk Grove-Rancho Cordova-El Dorado Connector Phase I Environmental Study, Placer County, California, Sacramento Area Council of Governments**.** Project entails planning, engineering, and environmental services for development of a connector that will link residential areas and employment centers and provide multi-modal options for travel within the corridor, including transit, bicycle, and pedestrian facilities. The connector will relieve congestion on the overcrowded existing two-lane roadway that currently serves the corridor. Responsibilities include preparation.

Cultural Resources Task Leader, 2006-2008

- Fresno-Yosemite International Airport Master Plan EA/EIR. Complete cultural resources tasks including prefield research, Native American consultation, pedestrian reconnaissance and authored section for an EA/EIR covering near-and long-term projects for the 20-year Airport Master Plan, which URS prepared. Projects include runway and taxiway extensions, terminal and apron expansions, new rental car facilities, land acquisition, and related facility changes in the City of Fresno, California.

Senior Project Archaeologist, 2006-2008

- Mammoth Yosemite Airport Horizons Air Operations Amendment EIS**.** Complete cultural resources tasks including prefield research, Native American consultation, pedestrian reconnaissance and authored section for an EIS addressing a litigation-directed EIS to reinstate commercial carrier service to the Airport in the Community of Mammoth, California.

Cultural Resources Task Leader, 2006-2008

- Sacramento International Airport Master Plan Development EIR and Terminal EA, County of Sacramento. Complete cultural resources tasks including prefield research, Native American consultation,

Archaeologist, Holman and Associates, 1990.

Project Archaeologist, USDI National Park Service, Yosemite National Park, 1988-1990.

Crew Chief, USDI National Park Service, Yosemite National Park, 1988.

Project Coordinator, Cultural Resources Facility, Sonoma State University, 1988

Archaeologist, USDI National Park Service, Yosemite National Park, 1986-1988.

Archaeologist, Archaeological Consulting and Research Services, Inc., 1987.

Project Coordinator, Cultural Resources Facility, Sonoma State University, 1985-1986.

Assistant Project Coordinator, Cultural Resources Facility, Sonoma State University, 1984-1985.

Archaeologist, Cultural Resources Facility, Sonoma State University, 1983-1984.

Anthropology Tutor, Santa Rosa Junior College, 1982-1983.

Archaeological Intern, USDA National Forest Service, Mendocino

pedestrian reconnaissance and authored sections for two separate CEQA and NEPA documents. The EIR included all of the master plan projects for the next 20 years; the EA focused on the terminal and related projects for development in the short-term.

Senior Project Archaeologist, 2006-2007

- Yucca Mountain Railroad Environmental Impact Study, Nevada Sample archaeological inventory and preparation of cultural resource documentation in support of environmental impact analysis of a proposed 340-mile rail corridor through central Nevada.

Senior Project Archaeologist, 2006-2007

- Priority 3 Excavations, Yosemite National Park, California (2006-2007): Historic research in support of archaeological evaluation of 15 historic and prehistoric sites in Yosemite Valley, Yosemite National Park, California.

SeniorArchaeologist, 2005-2007

- Mesquite Airport Replacement Project, Federal Aviation Administration, Mesquite, Nevada. Archaeological inventory of a proposed airport facility, Clark County, Nevada.

Senior Archaeologist, 2003-2004

- Placer Parkway Corridor Preservation Project. Completed record searches, Native American consultation, and conducted fatal flaw analysis for project with the goal of preserving an approximately 15-mile transportation corridor connecting Placer and Sutter Counties, California.

Senior Archaeologist, 2003-2005

- Cotterel Mountains Wind Development Project, Cassia County, Idaho. Archaeological inventory of a proposed wind development project in south central Idaho.

Project Archaeologist, 2003-2005

- Offshore LNG Terminal and Pipeline and Onshore Pipeline. Deepwater Port Act Application and FERC

National Forest, California, 1982.

PROFESSIONAL AFFILIATIONS

Society for California Archaeology

Archaeological Conservancy

Section 7c Application (Confidential Client). Prepared Archaeological Study in support of the EIS and FERC application for LNG terminal on the Gulf Coast.

Project Archaeologist, 2003-2005

- Vista del Sol LNG Terminal and Pipeline, FERC Section 3 and 7c Applications (Confidential Client). Prepared Archaeological Study in support of the EIS and FERC application for LNG terminal on the Gulf Coast.

Project Archaeologist, 2003-2005

- Pine Tree Canyon Wind Energy Project, Kern County, California. Archaeological inventory and evaluation of a wind energy project in the Tehachapi Range, California, for the Los Angeles Department of Water and Power.

Field Director, 2000-2006

- Los Angeles Aqueduct Project, Kern County, California. Inventory and site recordation along the First and Second Los Angeles Aqueducts, conducted for the Los Angeles Department of Water and Power

Project Archaeologist, 2002

- Salton Sea Unit 6 Project, Imperial County, California. Archaeological inventory of proposed geothermal energy facilities in the Colorado Desert, southern California.

Project Archaeologist, 2001-2002

- Bighorn Power Generation Project, Clark County, Nevada, Archaeological inventory, evaluation, and data recovery for a proposed energy generation facility and transmission line, southern Nevada, for Reliant Energy, Inc.

Project Archaeologist, 2001-2002

- Meadow Valley Generation Project, Lincoln and Clark counties, Nevada,. Archaeological inventory and evaluation for a proposed energy generation facility and transmission line, southern Nevada, for PG&E National Energy Group.

Project Archaeologist, 2001-2004

- South Mist Pipeline Extension Project. Conducted archaeological reconnaissance along route of proposed 60 to 90-mile long natural gas pipeline and alternatives within western Oregon for Northwest Natural Gas Company, Portland, Oregon.

Project Archaeologist, 2002-2003

- DeWitt Center Master Plan. Completed record search, Native American consultation, archaeological survey, and authored existing conditions/baseline report for the future preparation of a Master Plan Environmental Impact Report (EIR) for the DeWitt Center property in the City of Auburn, California.

Project Archaeologist, 2002-2003

- Home Depot. Completed record search, Native American consultation, conducted archaeological survey, and authored technical sections for Environmental Impact Report (EIR) for a proposed 105,000-square-foot warehouse-style Home Depot store, with an additional 24,000-square-foot outdoor garden center, and access roadway off State Route 49 in unincorporated Placer County, about 4 miles northwest of the City of Auburn, California.

Project Archaeologist, 2001-2002

- Southern San Joaquin Oil Fields Study. This study is being conducted to develop and ultimately support the implementation of an agreement to be executed by the Bureau of Land Management (BLM), Department of Energy (DOE), and California State Historic Preservation Officer (SHPO) for the future treatment of cultural resources within the oil fields of the Southern San Joaquin Valley. Conducted for USDI BLM, Bakersfield Office.

Field Director, 2001-2003

- Yosemite Falls Archeological Evaluation Project. Directed site recordation and evaluation excavations of archaeological sites within the Yosemite Falls vicinity of Yosemite National Park. Conducted for the USDI National Park Service, Yosemite National Park.

Project Archaeologist, 2001-2002

- Colusa Power Plant Application for Certification. Completed record search, conducted archaeological survey, and authored technical section for environmental document for Reliant Energy Corporation in preparation of power plant expansion, Colusa County, California.

Project Archaeologist, 2000-2001

- Cellular Communication Towers Construction Project. Completed record searches, conducted archaeological surveys, and co-authored technical reports (with Michael Kelly) for Mericom Corporation in preparation of the installation of 16 cellullar communication tower in the eastern portions of the states of Oregon and Washington.

Project Archaeologist, 2000-2001

- Bethel Island Bridge Replacement Project. Completed record search, conducted archaeological survey, and authored technical report for Contra Costa County Department of Public Works, Contra Costa County, California.

Project Archaeologist, 2000

- San Jose Post Office Vehicle Maintenance Facility Environmental Assessment. Completed record search, conducted archaeological survey, and authored technical section for environmental document for U.S. Post Office Pacific Facilities Services Office in preparation of new facility construction in Castroville, Monterey County, California.

Project Archaeologist, 2000

- California State University Hayward Expansions. Completed record searches, conducted archaeological surveys, and authored technical sections for environmental documents for California State University Hayward in preparation of various campus expansion projects in the City of Hayward, Alameda County, California.

Project Archaeologist, 2000

- West Texas Site Demolition Project. Conducted archaeological survey and authored technical section for environmental document for proposed demolition of historic structures in the City Of Vacaville for the Solano County Planning Department, Solano County, California.

Project Archaeologist, 2000

- Antonio Mountain Ranch Specific Plan. Completed record search, conducted archaeological survey, and authored technical section for environmental document for Placer County Planning Department, Placer County, California.

Field Director, 2000

- Post Fire Archaeological Evaluation. Directed archaeological survey and damage assessment of 450 acres within backcountry of Yosemite National Park. Conducted for the USDI National Park Service, Yosemite National Park.

Project Archaeologist, 2000

- 55 Second Street Project. Construction monitoring for proposed highrise office building within the City of San Francisco for Myers Development Corporation.

NEPA Reviewer, 2000-2002

- Yosemite Valley Plan. Conducted NEPA review for a variety of sections within Final Yosemite Valley Plan for the USDI National Park Service, Yosemite National Park.

Project Archaeologist, 2000-2002

- Goldendale Power Plant Project. Completed record search, conducted archaeological survey, and co-authored technical section for environmental document for proposed power plant within the City of Goldendale, Washington

Project Archaeologist, 2000-2001

- Kosciusko Island Timber Sales. Conducted archaeological reconnaissance of coastline areas along Kosciusko Island, Alaska. Conduct for the USDA National Forest Service, Tongass National Forest, Alaska

Field Director, 2000

- Lake Don Pedro Resort Project. Directed archaeological survey for proposed resort/housing development along Lake Don Pedro, California.

Project Archaeologist, 2000

- Atkinson Pedestrian Bridge Project. Completed record search, conducted archaeological survey, and authored technical report for the City of Roseville, California.

Project Archaeologist, 2000-2003

- South Mist Pipeline Extension Project. Conducted archaeological reconnaissance along route of proposed 60 to 90-mile long natural gas pipeline and alternatives within western Oregon for Northwest Natural Gas

Company, Portland, Oregon.

Project Archaeologist, 2000

- Ediz Hook Expansion Project. Conducted archaeological reconnaissance for proposed facility expansion of United States Coast Guard Station on Ediz Hook, Port Angeles, Washington

Section 106 Compliance Review, 1999-2000

- Conducted Section 106 Review for FEMA of various projects funded as a result of the Northridge Earthquake, Los Angeles County, California.

Project Archaeologist, 1999-on going

- Potrero Power Plant Application for Certification. Completed record search, conducted archaeological survey, and authored technical section for environmental document for Southern Energy of California in preparation of power plant expansion, San Francisco, California.

Project Archaeologist, 1999-2002

- Contra Costa Power Plant Application for Certification. Completed record search, conducted archaeological survey, and authored technical section for environmental document for Southern Energy of California in preparation of power plant expansion, Antioch, California.

Project Archaeologist, 1999-2000

- Interim Measures, FMC Test Track Facility. Monitoring of remediation efforts at FMC Plant for FMC, Inc., San Jose, California.

Project Archaeologist, 1999

- North Bend Gravel Quarry Project. Completed record search, conducted archaeological survey, and authored technical section for environmental document for Snoqualmie County, Washington.

Project Archaeologist, 1999

- Presidio Parking Project. Archival research and monitoring of geotechnical investigation for proposed parking facility in the Presidio of San Francisco. Conducted for the Presidio Trust, San Francisco, California.

Project Archaeologist, 1999

- Richmond Harbor Project. Archaeological survey for proposed harbor development within the City of Richmond, California for Catellus, Inc.

Project Archaeologist, 1999-2001

- Fourth Street Bridge Project. Archaeological survey for bridge reconstruction for the City of San Francisco.

Project Archaeologist, 1999-2001

- Bickford Ranch Development Project. Impact assessment and preparation of mitigation plan for proposed housing development for Placer County, California.

Project Archaeologist, 1999-2001

- Orchard Hotel/665 Bush Street Project. Construction monitoring for proposed hotel on Nob Hill within the City of San Francisco for 665 Bush Street, Inc.

Project Archaeologist, 1998-2000

- Western Hub Gas Transmission Project. Archaeological survey and technical report for proposed 32 mile-long gas pipeline and alternatives through the Delta region of central California for Western Hub Properties.

Project Archaeologist, 1998-2000

- Wake Island Project. Archaeological survey and monitoring of subsequent remediation activities on Wake Island for the United States Air Force/Navy.

Project Archaeologist, 1998-2000

- 150 California Street Project. Construction monitoring for a proposed high-rise development within Financial District of San Francisco, California for LaSalle Partners Limited.

Project Archaeologist, 1998

- Yosemite Lodge Project. Directed fieldwork and co-authored report (with Kathleen Hull, Russ Bevill, and Geoff Spaulding) of archaeological test excavations in Yosemite National Park. Conducted for the USDI National Park Service, Yosemite National Park, California.

Project Archaeologist, 1997-1999

- Pacific Bell Park Project. Conducted archival research and construction monitoring for baseball park being

constructed for San Francisco Giants by Kajima Urban Development Company.

Project Archaeologist, 1997-98

- Alturas Intertie Project Conducted archaeological survey and test excavations along route of proposed transmission line across northeastern California for Sierra Pacific Power Company, Reno, Nevada.

Project Archaeologist, 1997-98

- Penn Mine Remediation Project. Completed various cultural resources tasks including survey, site recordation, test excavations, and archival research for various historic properties within the Penn Mine Mining District, Campo Seco, California for OHM Remediation Services Corp.

Project Archaeologist, 1997

- American Canyon Wastewater Treatment Facility. Conducted archaeological survey of proposed treatment plant and prepared EIS report on cultural resource studies for City of American Canyon, Napa County, California

Project Archaeologist, 1997-1998

- Mount Hood National Forest. Conducted archaeological survey of 11 miles of roadway slated for demolition and conducted test excavations at four sites within the Fish Creek drainage for USDA National Forest Service, Mt. Hood National Forest, Oregon.

Project Archaeologist, 1997

- Deschutes National Forest. Conducted archaeological survey of 3,500 acres and re-recorded 125 previously identified sites in central Oregon for USDA National Forest Service, Deschutes National Forest, Oregon.

Project Archaeologist, 1997

- Norden Snowshed Facility Project. Conducted archaeological survey of vicinity contaminated by a diesel fuel spill for Union Pacific Railroad.

Project Archaeologist, 1996-on going

- Gap Project. Archaeological testing and construction monitoring for proposed high-rise development within Financial District of San Francisco, California for the Gap Inc.

Project Archaeologist, 1996-1997

- State Civic Center Project. Providing archaeological monitoring services during construction of the new State Civic Center complex in San Francisco, California for HSH Design/Build, Inc.

Project Archaeologist, 1996

- Orrick Land Exchange. Archaeological survey of Bureau of Land Management holdings situated within Siskiyou County, California. Study completed for the Trust for Public Lands.

Project Archaeologist, 1995-1996

- Caltrain Extension Project. Member of team analyzing effect of project to cultural resources for the Peninsula Joint Powers Board.

Project Archaeologist, 1995-1998

- Archaeological Synthesis and Research Design for Yosemite National Park. Contributed to the synthesis of archaeological data completed within park and to the development of the park-wide research design.

Project Archaeologist, 1995-1996

- NEC Electronic, Inc., Development Project. Completed record search, conducted archaeological survey, and prepared EIS report on cultural resource studies for City of Roseville, Placer County, California.

Field Supervisor, 1995-1997

- Cross Cascades Transmission Project. Archaeological survey of transmission corridor between Seattle and Pasco, Washington for Olympic Pipeline Company.

Project Archaeologist, 1995-1996

- Norbridge Extension Project. Completed record search, conducted archaeological survey, and prepared EIS report on cultural resource studies for Alameda County Department of Public Works.

Project Archaeologist, 1995

- Union Pacific-Southern Pacific Merger. Member of team analyzing effect of project to cultural resources for Union Pacific Corporation.

Field Supervisor, 1995

- Big Springs Archaeological Project. Archaeological test

excavation of prehistoric site near Lake Almanor, Lassen County, California for USDA, Lassen National Forest.

Field Supervisor, 1995

- Whiskeytown Archaeological Project. Archaeological test excavation of prehistoric site on Whiskeytown National Recreation Area, near Redding, Shasta County, California.

Project Archaeologist, 1995

- Point Chico Support Building, U.S. Coast Guard Station Bodega Bay. Archaeological monitoring of construction on Doran Beach, Sonoma County, California.

Project Archaeologist, 1994-1996

- Hanford Nuclear Facility. Various cultural resource assessments for U.S.D.O.E. and their sub-contractors upon the Hanford Nuclear Facility, Washington.

Project Archaeologist, 1994-1996

- Long Term Water Supply Project. Archaeological survey and impact assessment for Kern County Water Agency, Bakersfield, California.

Project Archaeologist, 1994-1997

- Presidio of San Francisco. Archaeological monitoring of construction/rehabilitation projects of historic structures within the Presidio of San Francisco, Golden Gate National Recreation Area, California (on-going).

Project Archaeologist, 1994-1998

- Alameda County Department of Public Works. Archaeological investigations for various projects within the Alameda County, California (on-going).

Field Supervisor, 1994-1995

- Old Wawona Road Recordation Project. Archaeological survey of historic road corridor, Yosemite National Park, California.

Field Supervisor, 1994-1995

- Tuolumne Meadows Sewer Replacement Project. Archaeological testing and data recovery excavations for National Park Service within Yosemite National Park, California.

Project Archaeologist, 1994-1996

- Richmond Parkway Project. Archaeological testing for a

proposed roadway expansion within Richmond, Contra Costa County, California.

Field Supervisor, 1994

- Little Pinnacle Springs Archaeological Investigation. Archaeological test excavation of prehistoric site in Mendocino National Forest, California.

Project Archaeologist, 1994

- Juneau Connector Project. Archaeological survey and testing for proposed roadway between Juneau and Skagway, Alaska.

Project Archaeologist, 1993-1995

- Cultural resources inventory of the American River Watershed Investigation, Sutter and Sacramento Counties, California. Supervised a portion of the archaeological survey and site recordation for the U.S. Army Corps of Engineers.

Project Archaeologist, 1993-1995

- Mead-Adelanto Project. Participated in archaeological survey for proposed transmission line and monitored subsequent construction for Los Angeles Department of Water and Power.

Field Director, 1993-1994

- Stampede-Merril Timber Sale, Sierra and Nevada counties, California. Supervised archaeological survey of over 8,000 acres of land within the Sierraville and Truckee Ranger districts for the USDA Forest Service for proposed timber sale projects.

Project Archaeologist, 1993

- State Route 168, Fresno County, California. Completed archaeological investigation of a historic home-site on Academy for a proposed Caltrans road-widening project.

Field Director, 1993

- Travis Site, Six Rivers National Forest, Trinity County, California. Directed archaeological test excavation at site near Ruth Reservoir for USDA Six Rivers National Forest.

Project Archaeologist, 1993

- East Dublin-Pleasanton, Alameda County, California. Conducted subsurface testing for proposed Bay Area

Transit District Expansion Project.

Staff Archaeologist, 1993

- Eight Fathom Bight, southeastern Alaska. Conducted archaeological survey of 3,500 acres on Chichagof Island, Alaska for Tongass National Forest.

Project Archaeologist, 1992

- Naval Weapons Systems Training Facility, Boardman, Oregon. Completed record search, prepared sensitivity model, conducted archaeological survey, and prepared EIS report on cultural resource studies.

Field Supervisor, 1992

- Sawmill Campground Expansion, Mono County, California. Supervised archaeological survey and limited excavation at seven sites along Robinson Creek for the USDA Toiyabe National Forest in conjunction with proposed campground improvements.

Field Supervisor, 1992

- Pit 3, 4, and 5 Hydroelectric Project Data Recovery. Supervised archaeological excavations at several sites at Lake Britton in conjunction with a bank stabilization program. Worked with Native American monitors on removal and re-burial of human remains encountered.

Field Supervisor, 1992-1993

- State Route 49, Nevada County, California. Supervised archaeological survey of proposed route alternatives near Grass Valley. Ongoing.

Project Archaeologist, 1992

- State Route 84, West Sacramento, Yolo County, California. Archaeological survey and cultural resources sections for improvements.

Field Director, 1992

- Sacramento - San Joaquin River Delta, Solano and Sacramento Counties, California. Archaeological survey for proposed improvements to 25.5 miles of levee.

Field Director, 1991

- Eldorado National Forest, California. Directed archaeological survey of over 22,000 acres of land for salvage timber sales.

Field Supervisor, 1991

- Manenggon Hills Development Project. Archaeological data recovery excavations for a 1300-acre housing and golf development near Yona, Guam.

Field Supervisor, 1991

- Yosemite-Foresta Survey, Mariposa County, California. Archaeological survey and post-fire surface evaluation of Big Meadow/Foresta area of Yosemite National Park.

Project Archaeologist, 1991

- 150 California Street Project. Archaeological testing and technical report for a proposed high-rise development within Financial District of San Francisco, California for PacTel Properties.

Staff Archaeologist, 1991

- Kern River Pipeline Cultural Resource Survey, Nevada. Cultural resource data recovery excavations along the 150-mile section of the pipeline through southern Nevada.

Field Supervisor, 1990-1991

- State Route 41, Fresno County, California. Served as field supervisor and junior report author for archaeological test excavations of two sites in Coarsegold for a proposed Caltrans road-widening project.

PUBLICATIONS

SELECTED PROFESSIONAL REPORTS

Archaeological Survey of the Union Pacific Railroad Norden Response Action, Nevada and Placer Counties, California (with Russell Bevill, Michael S. Kelly, and Elena Nilsson). Report prepared for Union Pacific Railroad Company, Omaha, Nebraska. Prepared by Dames & Moore, 1997.

Report for the Archaeological Monitoring Services, Task Order 53. Building 10 Funston Avenue, Presidio of San Francisco. Report prepared for USDI National Park Service, Golden Gate National Recreation Area, San Francisco, California. Prepared by Dames & Moore, 1997.

Report for the Archaeological Monitoring and Subsurface Investigation of the Grant Property at 453 C Street, City of Richmond, Contra Costa County, California. Report prepared for the City of Richmond, Public Works Agency, California.

Prepared by Dames & Moore, 1996.

Archaeological Investigation for Task Order 51. Preliminary Design Services for Overnight Accommodations, Presidio of San Francisco. Report prepared for USDI National Park Service, Golden Gate National Recreation Area, San Francisco, California. Prepared by Dames & Moore, 1996.

Archaeological Evaluation of CA-LAK-1156, Little Pinnacle Spring, Mendocino National Forest, Lake County, California (with Kathleen Hull and Russell Bevill). Report prepared for USDA Forest Service, Mendocino National Forest, Willows, California. Report prepared by Dames & Moore, 1995.

Report for Archaeological Monitoring Services Point Chico Support Building, United States Coast Guard Station Bodega Bay, Sonoma County, California. Report prepared for United States Coast Guard Facilities and Design Center Pacific, Seattle, Washington. Prepared by Dames & Moore, 1995.

Archaeological Investigation for Task Order 34. Preliminary Design Services for Overnight Accommodations, Presidio of San Francisco. Report prepared for USDI National Park Service, Golden Gate National Recreation Area, San Francisco, California. Prepared by Dames & Moore, 1995.

Archaeological Monitoring Services Zone 5 Line H Flood Control Channel Bat Spruce Street Crossing, Newark, Alameda County, California. Report prepared for the County of Alameda, Public Works Agency, Hayward, California. Prepared by Dames & Moore, 1995.

Archaeological Reconnaissance of Foothill Road, Mile 4.48(R36010), Alameda County, California. Report prepared for the County of Alameda, Public Works Agency, Hayward, California. Prepared by Dames & Moore, 1995.

Archaeological Reconnaissance of Palomares Road, Road, Mile 5.18 (R36007), Alameda County, California. Report prepared for the County of Alameda, Public Works Agency, Hayward, California. Prepared by Dames & Moore, 1995.

Archaeological Reconnaissance of the Zone 3A Line H Flood Control Channel (F03C31), Hayward, California. Report prepared for the County of Alameda, Public Works Agency, Hayward, California. Prepared by Dames & Moore, 1995.

Archaeological Reconnaissance of the Zone 6 Line F Flood Control Channel Between Curtner Road and Paseo Padre Parkway, Fremont, California. Report prepared for the County of Alameda, Public Works Agency, Hayward,

California. Prepared by Dames & Moore, 1995.

Interim Report for Archaeological Monitoring Services Task Order 28 Water Treatment Plant-Custom Plant Presidio of San Francisco. Report prepared for USDI National Park Service, Golden Gate National Recreation Area, San Francisco, California. Prepared by Dames & Moore, 1995.

Archaeological Investigation for Task Order 27. Preliminary Design Services for Overnight Accommodations, Presidio of San Francisco. Report prepared for USDI National Park Service, Golden Gate National Recreation Area, San Francisco, California. Prepared by Dames & Moore, 1994.

Archaeological Reconnaissance of the Proposed Subacute Treatment Facility, Fairmont Hospital Campus, San Leandro, California. Report prepared for the County of Alameda, Public Works Agency, Hayward, California. Prepared by Dames & Moore, 1994.

Historic Study Report/Extended Phase I Survey of CA-FRE-2905H. Report prepared for the California Department of Transportation, District 6, Fresno, California. Prepared by Dames & Moore, 1994.

Negative Archaeological Survey Report. Jefferson Boulevard/SR 84 Road Improvement. Report prepared for the City of West Sacramento, California Prepared by Dames & Moore, 1994.

Archaeological Survey Report. Route 49, Lime Kiln Road to Grass Valley. Report prepared for the California Department of Transportation, District 6, Fresno, California. Prepared by Dames & Moore, 1993.

Post-fire Archaeological Survey of Devils Postpile National Monument, Madera County, California (with Kathleen L. Hull). Report prepared for USDI National Park Service, Sequoia-Kings Canyon National Parks, Three Rivers, California. Prepared by Dames & Moore, 1993.

Negative Archaeological Survey Report. East Dublin/Pleasanton BART Station. Report prepared for the Bay Area Rapid Transit District, Oakland, California Prepared by Dames & Moore, 1993.

Archaeological Survey and Evaluation for the Proposed Sawmill Campground Expansion, Bridgeport Ranger District, Toiyabe National Forest (with Kathleen L. Hull). Report prepared for USDA Forest Service, Toiyabe National Forest, Sparks, Nevada. Prepared by Dames & Moore, 1993.

The Archaeological Investigation of a World War II-era Type 95 Japanese Tank (Site #16) Within the Manenggon Hills Project, Yona, Guam. Submitted to Micronesian Archaeological Research Services, Inc. 1993.

Cultural Resources Survey. Sacramento River Systems Evaluation Phase IV, Sacramento and Solano Counties, California (with Elena Nilsson). Report prepared for the United States Department of the Army, Sacramento District, Corps of Engineers. Prepared by Dames & Moore. 1993.

Archaeological Survey Report, Silver Insect Salvage Sale (with Michael S. Kelly). Report prepared for USDA National Forest Service, Eldorado National Forest. Dames & Moore, 1991.

Archaeological Survey Report, Amador Survey Project (with Sandra S. Flint and Michael S. Kelly). Report prepared for USDA National Forest Service, Eldorado National Forest. Dames & Moore, 1991.

Archaeological Survey Report, Solsbury Archaeological Survey Project (with Sandra S. Flint and Michael S. Kelly). Report prepared for USDA National Forest Service, Eldorado National Forest. Dames & Moore, 1991.

Phase II Evaluations at Archaeological Site CA-MAD-1737, Madera County, California (with Kathleen L. Hull). Report prepared for California Department of Transportation, District 6. Dames & Moore, 1991.

Phase II Evaluations at Archaeological Site CA-MAD-1744/H, Madera County, California (with Kathleen L. Hull). Report prepared for California Department of Transportation, District 6. Dames & Moore, 1991.

Archaeological Testing, 150 California Street Project for Pactel Properties. Report prepared for Pactel Properties. Dames & Moore, 1991.

Fieldwork Summary: Generals Highway Archaeological Project (SEKI 89A). Archaeological Test Excavations at Hospital Rock and Potwisha, Sequoia National Park, California. USDI National Park Service, Yosemite National Park, 1990.

Fieldwork Summary: Generals Highway Archaeological Project (SEKI 88C). Archaeological Test Excavations at Hospital Rock and Potwisha, Sequoia National Park, California. USDI National Park Service, Yosemite National

Park, 1990.

Archaeological Clearance Report for the Canyon View Waterline Replacement in Sequoia-Kings Canyon National Parks (SEKI 89H). USDI National Park Service, Yosemite National Park, 1989.

Archaeological Clearance Report for the Concessionaires Residential Area Sewerline Replacement in Sequoia-Kings Canyon National Parks (SEKI 89I). USDI National Park Service, Yosemite National Park, 1989.

Archaeological Clearance Report for the Boundary Fence Along South-West Boundary of Sequoia-Kings Canyon National Parks (SEKI 89C). USDI National Park Service, Yosemite National Park, 1989.

Archaeological Clearance Report for the New Waterline in Silver City, Sequoia-Kings Canyon National Parks (SEKI 89D). USDI National Park Service, Yosemite National Park, 1989.

Archaeological Clearance Report for the Remote Solar Panel to Power Composting Toilet in South Fork Campground, Sequoia-Kings Canyon National Parks (SEKI 89F). USDI National Park Service, Yosemite National Park, 1989.

Archaeological Clearance Report for the Lewis Creek Structure Removal and Replacement in Sequoia-Kings Canyon National Parks (SEKI 89J). USDI National Park Service, Yosemite National Park, 1989.

Archaeological Clearance Report for the Roads End Cabin Removal and Kiosk Removal and Replacement in Sequoia-Kings Canyon National Parks (SEKI 89G). USDI National Park Service, Yosemite National Park, 1989.

An Archaeological Survey of the Proposed American Canyon Class III Landfill, East of American Canyon, Napa County, California. Cultural Resources Facility, Sonoma State University, Rohnert Park, California, 1988.

An Archaeological Survey of the Wilkinson Property (A.P. 53-120-41) at 13280 Arnold Drive in Glen Ellen, Sonoma County, California. Cultural Resources Facility, Sonoma State University, Rohnert Park, California, 1988.

An Archaeological Investigation of the Proposed Villa Royale Subdivision at Stony Point Road (A.P. 125-241-02), Santa Rosa, Sonoma County, California. Cultural Resources Facility, Sonoma State University, Rohnert Park, California,

1986.

An Archaeological Study for City Trunk Sewer, a Water Main Alignment, and a Water Reservoir Tank Site (7820 Rancho de Amigos), Cloverdale, Sonoma County, California (with Leigh Jordan) Cultural Resources Facility, Sonoma State University, Rohnert Park, California, 1985.

An Archaeological Investigation for Portions of Jack London Ranch Near Glen Ellen, Sonoma County, California (with Allan Bramlette). Cultural Resources Facility, Sonoma State University, Rohnert Park, California, 1985.

An Archaeological Survey of the Napanook Vineyard, (A.P. 27-421-08), Near Yountville, Napa County, California. Cultural Resources Facility, Sonoma State University, Rohnert Park, California, 1985.

Archaeological Investigation of the Richard Keith & Company Property at 1884 Amy Street, (A.P. 036-181-50), Santa Rosa, Sonoma County, California (with David Bieling). Cultural Resources Facility, Sonoma State University, Rohnert Park, California, 1984.

PAPERS PRESENTED

Archaeology on the Edge: Recent Data Recovery Excavations at Lake Britton. Paper presented at the Annual Meeting of the Society for California Archaeology, Asilomar, 1993.

Archaeological Test Excavations at CA-TRI-1297 (Travis Site), Six Rivers National Forest. Paper presented at the Society for California Archaeology, Northern Data Sharing Meetings, Sacramento, 1993.

Archaeology on the Edge: Recent Data Recovery Excavations at Lake Britton. Paper presented at the Society for California Archaeology, Northern Data Sharing Meeting, Sacramento, 1992.

URS

Michael S. Kelly

Principal Archaeologist, MA, RPA

Overview

Mr. Kelly manages URS Corporation's cultural resources program for the Pacific Northwest Region. Major responsibilities include management and direction of archaeological studies throughout the Pacific Northwest, northern California, and the Great Basin regions, proposal preparation and business development, report preparation, and technical review. Mr. Kelly has more than 28 years experience in cultural resources management and archaeological investigations.

Areas of Expertise

Prehistoric and Historical Archaeology

Pacific Northwest, California, Great Basin, and Pacific Regions

Cultural Resources Management

Years of Experience

With URS: 25 Years
With Other Firms: 3 Years

Education

MA/1986/Anthropology and Historical Archaeology/University of Nevada, Las Vegas
BA/1978/Anthropology/ University of California, Santa Barbara

Project Specific Experience

Federal Projects

Principal Archaeologist, Yucca Mountain Railroad Environmental Impact Study, Nevada (2006-2007): Sample archaeological inventory and preparation of cultural resource documentation in support of environmental impact analysis of a proposed 340-mile rail corridor through central Nevada. Ongoing

Historical Archaeologist, Priority 3 Excavations, Yosemite National Park, California (2006-2007): Archaeological evaluation of 15 historic and prehistoric sites in Yosemite Valley, Yosemite National Park, California. Ongoing.

Principal Archaeologist, Kasilof Road Relocation Project, Federal Emergency Management Agency, Kenai Borough, Alaska (2005): Archaeological inventory of a proposed road realignment, Kenai Peninsula, Alaska.

Principal Archaeologist, Mesquite Airport Replacement Project, Federal Aviation Administration, Mesquite, Nevada (2005-2007): Archaeological inventory of a proposed airport facility, Clark County, Nevada.

Principal Archaeologist, Quillayute River Project, US Coast Guard, Clallam County, Washington (2003): Archaeological inventory and tribal consultation for a US Coast Guard facility expansion.

Principal Investigator, Lower Yosemite Falls Project, National Park Service, Yosemite National Park, California (2002-2003): Testing, evaluation, and data recovery at three historic sites in Yosemite Valley.

Principal Archaeologist, Elwha River Restoration Project, US Bureau of Reclamation, Port Angeles, Washington (2002-2005): Archaeological inventory and monitoring of groundwater testing operations in support of dam removal and restoration of the Elwha River, Olympic Peninsula, Washington.

Project Director, Ely Fuel Reduction Project, Bureau of Land Management, White Pine County, Nevada (2001-2002): Inventory of approximately 10,000 acres in east central Nevada to assist BLM with fire management practices.

Principal Investigator, Kosciusko Island Project, US Forest Service, Tongass National Forest, Alaska (2000-2001): Inventory of high sensitivity coastal areas and documentation of prehistoric sea cave occupation sites on Kosciusko Island, southeast Alaska.

Senior Archaeologist, Kawich Range Stratified Archaeological Sampling Project, US Air Force, Nellis Air Force Range, Nevada (1999-2002): Archaeological sampling study of a 35,000-acre area in Nye County, south-central Nevada.

Senior Archaeologist, Hagerman National Fish Hatchery, University of Idaho, Hagerman, Idaho (2001): Archaeological inventory and preparation of a cultural resource management plan for a fish hatchery in central Idaho, for the University of Idaho and the U.S. Fish and Wildlife Service.

Principal Investigator, Air Station Port Angeles, US Coast Guard, Clallam County, Washington (2000): Archaeological surface and subsurface survey, USCG Group/Air Station Port Angeles, Ediz Hook, Washington.

Principal Investigator, Gold Hill Archaeological Project, US Forest Service, Lane County, Oregon (1998-2000): Archaeological data recovery excavations in the Cascade Range of central Oregon.

Senior Archaeologist, Banks Lake and Potholes Reservoir Resource Management Plans, USBR, Douglas and Grant Counties, Washington (1998-2000): Preparation of cultural resources overviews and summary inventories for two Bureau of Reclamation projects, central Washington.

Senior Archaeologist, Fish Creek Restoration Project, US Forest Service, Clackamas County, Oregon (1997-1999): Archaeological inventory, evaluation, and data recovery within the Clackamas River watershed, Mt. Hood National Forest, Oregon.

Senior Archaeologist, Deschutes Archaeological Inventory and Recordation Project, US Forest Service, Deschutes County, Oregon (1997): Inventory of 3500 acres and recordation of 135 archaeological sites on the Deschutes National Forest, Oregon.

Senior Archaeologist, Long-Damon Project, US Forest Service, Modoc County, California (1996-1997): Post-fire inventory of

approximately 8500 acres and recordation of 325 sites on the Modoc National Forest.

Senior Archaeologist, Hanford Site, Department of Energy (DOE) Richland Operation, Richland, Washington (1995-1997): Assisted DOE Cultural Resources Program Manager in project management, policy development, regulatory compliance, and Native American consultation.

Task Manager, Yosemite Valley and Wawona Archaeological Investigations, National Park Service, Yosemite National Park, California (1995): Assisted in the preparation of technical reports for miscellaneous archaeological survey, test excavation, and data recovery projects undertaken by the National Park Service in Yosemite National Park from 1985 to 1990.

Expert Witness, ARPA Consultation, US Forest Service, Stanislaus National Forest, California (1994-1995): Provided impact assessment to the United States Department of Agriculture for use in legal proceedings involving damage to archaeological resources on Federal land under the Archaeological Resource Protection Act (ARPA).

Project Manager and Field Director, Eagle Lake Project, US Forest Service, Lassen County, California (1994-1995): Directed field investigations for archaeological test excavations at site at CA-Las-549, Lassen National Forest, northeastern California.

Senior Archaeologist, Cross-Site Transfer System, Department of Energy, Hanford, Washington (1994-1995): Analysis of impacts to archaeological sites during development of hazardous waste storage and transportation facilities at the Hanford Site, Washington.

Senior Archaeologist, Whidbey Island Naval Air Station, Whidbey Island, Washington, (1993-1994): Preparation of an Historical and Archaeological Resource Protection (HARP) Plan for NAS Whidbey Island properties in the Puget Sound, Washington and eastern Oregon.

Project Manager, Stampede/Merril Timber Sales, Nevada and Sierra counties, California (1993-1994): Managed archaeological survey of 8,000 acres of timber lands on the Truckee District, Tahoe National Forest.

Task Leader, Eight Fathom Timber Sale EIS, Chichagof Island, Alaska (1993-1994): Archaeological research design, inventory, and resource documentation for USDA Forest Service, Tongass National Forest.

Senior Archaeologist, Tiller Data Recovery Project, Tiller, Oregon (1993): Data recovery excavations at a single prehistoric site for the USDA Forest Service, Umpqua National Forest, south-central Oregon.

Senior Archaeologist, Naval Weapons Systems Training Facility, Boardman, Oregon (1992-1993): Cultural Resource Inventory Plan and performed a sample survey and archaeological sensitivity model, in conjunction with land-use modification studies.

Principal Investigator, Historic architectural and archaeological survey, Jackson Park Housing Complex, Bremerton, Washington (1992-1993): Archaeological inventory and sensitivity analysis prepared for U.S. Navy.

Task Manager, Ushk Bay EIS, Chichagof Island, Alaska (1992): Archaeological inventory and resource documentation, under contract to USDA Forest Service, Tongass National Forest.

Senior Archaeologist, Waterfront Shops EIS and Dry Dock EIS, Bangor Subase, Puget Sound, Washington (1992): Archaeological survey and resource documentation, under contract to Department of the Navy.

Expert Witness, Travis Site, Six Rivers National Forest, Trinity County, California (1991): Provided impact assessment and expert testimony on behalf of the United States Department of Agriculture during legal proceedings involving the inadvertent excavation of archaeological resources on Federal land under the Archaeological Resource Protection Act (ARPA).

Principal Investigator, Cultural Resource Inventory, Eldorado National Forest (1991): Archaeological survey of approximately 23,000 acres; Georgetown, Amador, and Pacific Ranger Districts.

Project Manager and Historical Archaeologist, Foresta, Big Meadow, and McCauley Meadow, Mariposa County, California (1991): Post-fire archaeological survey and surface evaluation within the A-Rock fire area, USDI National Park Service, Yosemite National Park.

Principal Investigator, Black Gulch Archaeological Survey, Plumas National Forest, California (1990-1991): Cultural resource inventory of approximately 5000 acres in the northern Sierra Nevada. Recordation of over 50 historic gold mining sites and communities.

Principal Investigator, McKenzie Timber Sale Survey, Plumas National Forest, California (1989): Archaeological inventory of a 3900 acre parcel in the northern Sierra Nevada; primary focus was upon historic mining sites.

Principal Investigator, Chris, Eureka, Garabini, and Mohawk Timber Sales, Plumas National Forest, California (1988): Archaeological inventory of approximately 6000 acres in the northern Sierra Nevada; recordation focused on nineteenth century mining sites.

Project Archaeologist, SUTCET Project, Inyo County, California (1988): Archaeological evaluation of three prehistoric sites on the China Lake Naval Weapons Center.

Project Archaeologist, DARCOM Archaeological Overview, Umatilla, Oregon (1984-1985): Preparation of the archaeological and environmental sections of a cultural resource overview for the Umatilla Army Depot, northeastern Oregon.

Project Archaeologist, Fort Irwin Archaeological Project, San Bernardino County, California (1982-1985): Mitigation of 14 archaeological sites in the central Mojave Desert as part of the No Name West Basin Data Recovery Project, Fort Irwin, California.

Power Projects

Principal Archaeologist, Pine Tree Canyon Wind Energy Project, Kern County, California (2003-2008): Archaeological inventory, evaluation, and data recovery for a wind energy project in the Tehachapi Range, California, for the Los Angeles Department of Water and Power.

Principal Archaeologist, Horizon Wind Energy Projects, San Berrnardino, Lassen, and Plumas Counties, California (2005-2008): Archaeological inventory and sensitivity analysis for various wind energy feasibility studies throughout northern and southern California. Ongoing.

Principal Archaeologist, Clipper Wind Energy Projects, Benton County, Washington; Elko and Esmeralda Counties, Nevada (2007): Archaeological inventory and sensitivity analysis for various wind energy feasibility studies in Washington and Nevada.

Principal Archaeologist, Toquop Energy Project, Lincoln County, Nevada (2006-2008): Archaeological inventory of a 31-mile rail line corridor associated with environmental permitting of a proposed coal-fired power plant, southeastern Nevada. Ongoing

Principal Archaeologist, Bradwood Landing LNG Project, Clatsop County, Oregon (2006-2008): Archaeological inventory and resource report preparation in support of permitting of a liquefied natural gas plant and associated infrastructure, northwestern Oregon. Ongoing.

Principal Archaeologist, Long Valley-Haiwee Transmission Line Project, Inyo County, California (2006-2007): Archaeological inventory and evaluation along a 9.5-mile transmission line corridor in the Owens Valley, eastern California, for the Los Angeles Department of Water and Power.

Principal Archaeologist, Celilo-Sylmar Transmission Line, Inyo and Kern counties, California (2003-2005): Archaeological inventory of a

Los Angeles Department of Water and Power transmission line corridor from Bishop to Mojave, California.

Principal Archaeologist, Cotterel Mountains Wind Development Project, Cassia County, Idaho (2003-2005): Archaeological inventory of a proposed wind development project in south central Idaho.

Senior Archaeologist, Salton Sea Unit 6 Project, Imperial County, California (2002): Archaeological inventory of proposed geothermal energy facilities in the Colorado Desert, southern California.

Senior Archaeologist, Plymouth Generating Facility, Benton County, Washington (2002-2003): Archaeological inventory of a proposed energy facility in southeastern Washington.

Principal Investigator, Bighorn Power Generation Project, Clark County, Nevada (2001-2002): Archaeological inventory, evaluation, and data recovery for a proposed energy generation facility and transmission line, southern Nevada, for Reliant Energy, Inc.

Principal Investigator, Meadow Valley Generation Project, Lincoln and Clark counties, Nevada (2001-2002): Archaeological inventory and evaluation for a proposed energy generation facility and transmission line, southern Nevada, for PG&E National Energy Group.

Senior Archaeologist, Umatilla Generating Project, Umatilla County, Oregon (2000-2002): Archaeological inventory of a proposed energy generating facilities in northeastern Oregon.

Senior Archaeologist, Goldendale Energy Project, Skamania County, Washington (2000-2002): Archaeological inventory and site evaluation for a proposed energy facility in the vicinity of Goldendale, Washington, for Calpine Energy.

Senior Field Director, Alturas Intertie Project, Modoc County, California (1997-2000): Archaeological data recovery excavations at selected sites on the Modoc National Forest, northeastern California, in conjunction with transmission line construction, for Sierra Pacific.

Principal Investigator and Project Manager, California-Oregon Transmission Project, Shasta County, California (1987-1990): Archaeological inventory and evaluation of a 340-mile transmission line corridor from southern Oregon to central California; data recovery investigation of four prehistoric sites in the southern Cascade region of northern California.

Field Director, Elk Creek Lake and Lost Creek Lake Archaeological Testing Project, Elk Creek, Oregon (1989-1990): Archaeological test excavation and National Register Evaluations at a series of prehistoric sites in the Rogue River Valley of southern Oregon, for the Portland

District, US Army Corps of Engineerrs. Conducted in conjunction with Mountain Anthropological Research.

Project Archaeologist, Coso Geothermal Project, Inyo County, California (1986-1987): Archaeological testing and evaluation of cultural resources at the Sugarloaf Mountain obsidian source, under contract with the Los Angeles Department of Water and Power.

Project Archaeologist, PG&E Gas Plant Project, California (1986): Coordinated the preparation of historic overviews of 84 historic gas plants throughout northern California.

Project Archaeologist, Geothermal Public Powerline Project, north-central California (1985): Cultural resources inventory for a transmission line corridor study in the North Coast Range of California.

Pipeline Projects

Principal Archaeologist, Coyote Springs Pipeline, Clark County, Nevada (2006-2007): Archaeological inventory of a 25-mile natural gas pipeline corridor, southern Nevada.

Principal Archaeologist, Los Angeles Aqueduct Project, Kern, Inyo, and Los Angeles Counties, California (2000-2007): Inventory and site recordation along the First and Second Los Angeles Aqueducts, conducted for the Los Angeles Department of Water and Power.

Principal Archaeologist, Mist Pipeline Expansion Project, Washington, Clackamas, and Marion counties, Oregon (2000-2004): Archaeological inventory and site documentation along approximately 90 miles of pipeline corridor in northwestern Oregon, conducted for Northwest Natural Gas Company.

Senior Archaeologist, Northwest Natural Gas Pipeline Expansion Project, Washington and Columbia counties, Oregon (1997-2000): Archaeological inventory of expanded pipeline corridors along a 60-mile pipeline corridor in northwestern Oregon.

Senior Archaeologist, Cross-Cascades Pipeline, Washington (1995-1999): Archaeological inventory of a proposed 240-mile oil products pipeline from western Washington to central and eastern Washington, for Olympic Pipeline Company.

Senior Archaeologist and Assistant Project Manager, Kern River Gas Transmission Pipeline Project, Utah, Nevada, and California (1990-1994): Managed cultural resource studies for an 840-mile pipeline from Utah to California; directed archaeological inventory, evaluation, and data recovery for the Nevada portion of the Kern River Pipeline,

extending approximately 150 miles from northwestern Utah to southeastern California.

Telecommunications Projects

Principal Archaeologist, CalTech Geodetic Monitoring Stations, Clark and Nye Counties, Nevada (2005): Archaeological monitoring of proposed global positioning system monitoring and communication sites, southern Nevada, for the California Institute of Technology.

Senior Archaeologist, Golgotha Butte Site, Skamania County, Washington (2000): Assistance with consultation with the Yakama Tribe over the siting of a communications tower adjacent to a traditional cultural property in south central Washington, for Spectrasite Communications Company.

Project Archaeologist, Rialto-Yuma Fiber-Optics Project, Riverside and Imperial Counties, California (1988): Cultural resource inventory of a 200-mile corridor across the Colorado Desert of southern California.

Project Archaeologist, Seattle-Spokane Fiber-Optics Survey, Washington (1986): Cultural resources survey along a proposed fiber optics cable route between Seattle and Spokane, Washington, under contract to US Sprint.

Transportation Projects

Principal Archaeologist, Eielson Branch Realignment Project, Alaska Railroad Corporation, Fairbanks, Alaska (2005-2006): Archaeological inventory of approximately 20 miles of proposed railroad corridor for extension of the Alaska Railroad from Fairbanks to Fort Wainwright, Alaska.

Principal Archaeologist, Lincoln City Highway Improvement Project, Lincoln City, Oregon (2005): Archaeological inventory of proposed improvements to Highway 101, Lincoln City, Oregon.

Principal Archaeologist, Central Oregon Highway Bridges Project, Malheur and Harney Counties, Oregon (2003-2004): Archaeological evaluation of four prehistoric sites in central eastern Oregon, for Oregon Department of Transportation.

Principal Archaeologist, Eastside Corridor Project, Douglas County, Washington (2001-2002): Archaeological inventory of alternative transportation corridors along State Route 28, East Wenatchee, Washington.

Senior Archaeologist, South Medford Interchange Project, Jackson County, Oregon (2000-2002): Archaeological inventory and site evaluation for proposed highway interchange modifications, south-central Oregon, for Oregon Department of Transportation.

Senior Archaeologist, Highway 62 Corridor Study, Jackson County, Oregon (1998-2000): Archaeological inventory of proposed transportation corridor alternatives in the vicinity of Medford, south central Oregon, for Oregon Department of Transportation.

Senior Archaeologist, Bear River Access Study, Franklin County, Idaho (1997): Archaeological inventory of a proposed access road corridor in the vicinity of the Oneida Narrows of the Bear River, southeastern Idaho.

Senior Archaeologist, Juneau Access Road Improvement Project, southeast Alaska (1994): Cultural resource inventory of a 72-mile corridor from Juneau to Skagway for Alaska Department of Transportation.

Task Manager, Cultural Resources Inventories, Route 49, Nevada County; Route 84, Alameda County; Route 16/49, El Dorado and Sacramento Counties; Gold Flat/Wolf Creek Road, Nevada County, (1989-1993): Archaeological survey of selected highway improvement corridors in central California, for California Department of Transportation.

Project Manager, State Route 41, Fresno County, California (1990-1991): Archaeological test excavations at two sites in Coarsegold, central Sierra Nevada, California, for California Department of Transportation.

Development Projects

Senior Archaeologist, Whittel Estate Archaeological Survey, Washoe County, Nevada (1998): Archaeological survey of a 54-acre parcel on the east shore of Lake Tahoe, in conjunction with a Bureau of Land Management land transfer.

Task Manager, Manenggon Hills Development Project, Guam (1991): Assisted with management of archaeological investigations at over 90 archaeological sites for MDI Guam Corporation.

Task Manager, North Las Vegas Land Transfer, Clark County, Nevada (1990): National Register evaluation of four prehistoric sites in the Las Vegas Valley, Nevada, in conjunction with a 4000 acre BLM land transfer.

Project Archaeologist, 343 Sansome Street Project, San Francisco, California (1988-1989): Historic archaeological testing and data recovery at a Gold Rush era commercial site in downtown San Francisco; under contract with Gerald D. Hines Interests.

Water Resources Projects

Historical Archaeologist, Penn Mine Historic Mining District, Calaveras County, California (1998): Archaeological inventory,

recordation, and evaluation of historic mining and homesteading features in the Sierra foothills of central California.

Senior Field Director, American River Watershed Investigation, Sacramento County, California (1992-1996): Archaeological research design, inventory plan, inventory, and testing project, American River Basin, north central California.

Project Manager, Pit No. 3, 4, 5 Hydroelectric Relicensing Project, Shasta County, California (1991-1995): Data recovery investigation of eight prehistoric sites within the Lake Britton Archaeological District; under contract with Pacific Gas and Electric Company.

Project Manager, Pit No. 1 Hydroelectric Relicensing Project, Shasta County, California (1991-1993): Archaeological inventory, Pit River and Fall River areas, northeastern California, for Pacific Gas and Electric.

Principal Investigator, Lake Britton Archaeological Monitoring Project, California, (1990-1991): Monitoring of vandalism and erosion at archaeological sites in the Lake Britton Archaeological District, Shasta County, California, under contract with Pacific Gas and Electric.

Historical Archaeologist, Eastern Sierra Hydroelectric Project, Mono County, California (1989): Evaluation of historic archaeological sites in the eastern Sierra Nevada; under contract to Southern California Edison.

Project Archaeologist, Pit 3, 4, and 5 Hydroelectric Relicensing Project, Shasta County, California (1985-1987): Testing and evaluation of 27 prehistoric archaeological sites in the Lake Britton Archaeological District, under contract with Pacific Gas and Electric Company.

Professional Societies/Affiliates

Register of Professional Archaeologists

Society for American Archaeology

Society for Historical Archaeology

Society for California Archaeology: Northern California Vice President 1992-1993

Publications

A list of selected publications is available upon request.

Chronology

1983-Present: URS Corporation, Portland, Oregon

1982-1983: Wirth Environmental Services

1980-1982: University of Nevada, Las Vegas, Research/Teaching Assistant

AREAS OF EXPERTISE

- Cultural Resources
- Archaeology

EDUCATION

B.S. (2001), Social Sciences, concentration in Environmental Geography; minor in Anthropology/ Geography

From California Polytechnic University, San Luis Obispo

REGISTRATIONS/ SPECIAL TRAINING

Competent Person/Trench Safety certified (8-Hour).

First Aid/CPR Certification

FIRM AFFILIATION

URS

PROFESSIONAL HISTORY

URS Corp, 2006 to present.

Archaeological Project Leader, California Department of Parks and Recreation (DPR), 2001-2006

Crew Chief and Archaeological Technician, Cultural Resource Management Services (CRMS), 2002 2006

Archaeological Technician, Applied Earthworks, Inc. 2005-

REPRESENTATIVE EXPERIENCE

- Responsible for undertaking and supervising cultural resources studies in California and Nevada. Duties include conducting excavation and survey, report preparation, analysis, field supervision, construction monitoring, and proposal preparation. Joined URS in 2006.

Staff Archaeologist 2008

- Ten Section Oil Field Project, Bakersfield, CA. Conducted cultural resource inventory and survey of the 1700 acre project area. Responsible for field planning, organization of crew, and recordation. Ongoing.

Staff Archaeologist 2008

- Willow Pass Generating Station, Pittsburg, CA. Conducted cultural resource survey and record search for the project area.

Staff Archaeologist 2008

- Solar II Cultural Resource Inventory, El Centro, California. Conducted survey and recordation dozens of sites within the 7000 acre project area. Responsible for leading and organizing crew and daily activities.

Staff Archaeologist 2008

- Oakland Airport Land Acquisition, Oakland, California. Conducted cultural resource survey and research, and preparation of technical document.

Staff Archaeologist 2007-2008

- Pine Tree Canyon Wind Energy Project, Kern County, California. Archaeological inventory and evaluation of a wind energy project near Tehachapi, California, for the Los Angeles Department of Water and Power.

Staff Archaeologist 2007-2008

- Downtown/Riverfront Streetcar Project in Sacramento, CA. Conducted field reconnaissance and prepared technical memo and EIR documents, satisfying CEQA requirements.

Staff Archaeologist, 2007-2008

- Historic Streetcar Extension Project in San Francisco, CA. Conducted field reconnaissance and prepared

2006.

Crew Chief, Cal Poly Foundation, Cal Poly SLO, 2001-2005.

Archaeological Technician, Garcia and Associates, 2005.

Archaeological Technician, Far Western Anthropological Research Group 2001-2005.

Archaeological Technician, Albion Environmental, 2004.

Archaeological Technician, Tremaine and Associates, 2003.

Archaeological Technician, Chambers Group, 2002.

Archaeological Technician, EDAW, 2002.

PROFESSIONAL AFFILIATIONS

Society for California Archaeology

technical memo and EIS documents, satisfying Sec. 106 requirements.

Staff Archaeologist, 2006-2007

- Yucca Mountain Railroad Environmental Impact Study, Nevada Sample archaeological inventory, intensive pedestrian survey and site recordation, and preparation of cultural resource documentation in support of environmental impact analysis of a proposed 340 mile rail corridor through central Nevada.

Staff Archaeologist, 2006-2007

- Priority 3 Excavations, Yosemite National Park, California (2006-2007): Conducted excavations of 15 historic and prehistoric sites in Yosemite Valley; responsible for all safety issues including trench safety/shoring, Yosemite National Park, California. Ongoing.

Staff Archaelogist 2006

- SMF Master Plan. Conducted intensive survey and prepared technical memo and EIS cultural documents for planned improvements at the Sacramento National Airport, CA

Staff Archaelogist 2006-2007

- Yosemite Pre-Burn Survey. Conducted survey and site recordation within two areas of western Yosemite National Park.

Staff Archaeologist, 2007

- Placer Parkway Corridor Preservation Project. Aided in the editing and final production of the draft report for Placer and Sutter Counties, California.

Staff Archaeologist, 2006

- Lake Don Pedro Resort Project. Conducted survey and excavations for proposed resort/housing development along Lake Don Pedro, California.

Staff Archaeologist, 2006

- Milsap Bar Campground Improvement Project. Supervised and conducted excavations at a multi-component site within the Plumas National Forest, CA

Archaeological Technician, 2002-2006

- Los Angeles Aqueduct Project, Kern County, California. Inventory and site recordation along the First and Second Los Angeles Aqueducts, conducted for the Los Angeles Department of Water and Power

Archaeological Project Leader/Crew Chief 2006

Data Recovery at CA-SLO-10, Spooner Ranch House. Conducted archaeological excavations for the DPR, and aided in directing Cal Poly field school students during excavations within Montana de Oro State Park, CA

Archaeological Project Leader/Crew Chief 2006

Survey of approx. 1500 acres; New State Acquisition: Hearst Property, within San Simeon State Park, CA

Archaeological Technician 2005

Bull Testing Facility Project, conducted excavations for proposed development Cal Poly, San Luis Obispo, CA

Archaeological Technician 2005

Brown Road Project. Conducted Excavations at Point Sal on Vandenberg Air Force Base, CA

Archaeological Technician 2005

Conducted a survey of a private parcel in Parkfield, CA. Responisble for new discovery and survey report.

Archaeological Technician 2005

Strawberry/LaPorte cultural inventory survey. Performed for the Plumas National Forest, CA

Archaeological Technician 2005

Data Recovery at CA-SLO-2359 project. Conducted excavations prior to the development of a private parcel.

Archaeological Technician 2005

Tranquillone Mountain Project. Conducted excavations at three sites along Honda Creek, Vandenburg Air Force Base, CA.

Crew Chief 2005

Los Osos Sewer Project. Conducted excavations at several sites, and was responsible for Trench Shoring/Safety activities prior to the construction of the Los Osos Sewer, performed for the LOCSD, Los Osos, CA.

Crew Chief 2005

Cal Poly Archaeological Field School. Aided in the the excavation of CA-SLO-9, for the Cal Poly Foundation, San Luis Obispo, CA

Archaeological Technician 2005

Conducted a survey of a private parcel in Paso Robles, CA prior to the development of the lot. Responsible for new discovery and the production of the survey report.

Archaeological Monitor, 2005

Monitored the construction of a private lot for the presence of cultural materials. Responsible for new discoveries and report preparation.

Archaeological Technician 2005

Conducted a survey of a private parcel in San Miguel, CA. Responsible for new discovery and the production of the survey report.

Archaeological Technician 2005

Conducted a survey of a private parcel in Bradley, CA. Responsible for new discovery and the production of the survey report.

Archaeological Technician 2005

Emergency Salvage Excavations of a shell midden in Gaviota, CA. Conducted excavations and was responsible to wet screening operation. Performed for Chevron.

Archaeological Project Leader/Monitor 2004-2005

Morro Bay State Park Campground Renovation Project. Conducted archaeological excavations and monitoring of sites within the campground. Responsible for the documentation of new discovery and coordination with construction crews, Morro Bay State Park, DPR, CA

Crew Chief,

Test Excavations of thirteen sites within Camp Roberts and Camp San Luis, California. Conducted excavations, responsible for crew coordination, post-field analysis, and laboratory work.

Archaeological Technician 2004

Butte Meadows Project. Conducted excavations at three sites within Lassen National Forest, CA

Archaeological Monitor 2004

Oak Shores Development Project. Conducted archaeological monitoring of for the development of a private development in Oak Shores, CA.

Archaeological Monitor 2004

Spectrum at Shadow Hills Project. Conducted archaeological monitoring and was responsible for new discovery and the report production, Indio, CA

Archaeological Technician 2004

Conducted the cultural resource inventory of a private parcel in anticipation of development in San Ardo, CA.

Archaeological Technician 2004

Conducted excavations at a private parcel in Los Osos, CA in anticipation of the lot's development.

Archaeological Project Leader 2003-2004

Sea West Ranch Project. Conducted the cultural resource inventory of the Sea West acquisition. Duties included site recordation, and report production, performed for the SLO Coast District of the DPR, CA

Crew Chief 2004

Cal Poly Field School. Conducted excavations and aided in directing students in the process of excavation of a site within Fort Hunter Liggett, CA.

Archaeological Technician 2004

Conducted excavations of a prehistoric site discovered during construction for a private client in Indio, CA

Archaeological Technician 2004

Conducted test excavations prior to the development of a private parcel in Nipomo CA

Archaeological Technician 2004

Los Osos Sewer Project. Conducted excavations and was responsible for trench safey/shoring, for the LOCSD, Los Osos, CA.

Archaeological Monitor 2004

Conducted arch. monitoring of a housing development for, King Ventures, Nipomo CA. Responsible for new discovery and monitoring report production.

Archaeological Monitor 2004

Conducted arch. monitoring at the Eckford Residence, Arroyo Grande, CA.

Archaeological Technician 2003

Santa Ysabel widening project. Conducted test excavations at several sites prior a street improvement, performed for CALTRANS, Los Osos, CA

Archaeological Technician 2003

Bridge Survey Project. Conducted arch. survey of three bridges within the Cuesta College property, CA

Archaeological Technician 2003

Highway 108 improvement project. Survey of several private parcels in anticipation of the a highway bypass, performed for CALTRANS in Sonora, CA.

Archaeological Technician 2003

Highway One improvement project. Survey of eight miles along Highway One, Santa Cruz, CA

Archaeological Project Leader 2001-2006

Archaeological Site Assessment of Archaeological sites within San Simeon, Montana de Oro, Pismo Beach, and Morro Bay State parks. Duties included site evaluation and recordation, and report production, DPR, CA

Archaeological Technician 2003

Test excavations of six sites within Camp Roberts, CA Excavations at Camp Roberts, CA

Crew Chief/Field School "Chef" 2003

Cal Poly Field School. Conducted excavations, aided in teaching field school students the processes of excavation, and prepared meals for students and workers. Fort Hunter Ligget, CA

Archaeological Technician 2003

Sacramento City Hall Annex Projects. Conducted excavations at a prehistoric site discovered during the construction of the Sac. City Hall Annex, CA

Archaeological Technician 2003

District 5 rural highway survey project, CALTRANS. Conducted arch. reconnaissance for historical features along Highway One in Big Sur, CA

Archaeological Technician 2002-2003

Jawbone Canyon Project. Conducted arch. survey with duties including site reconnaissance and site recordation. Performed for the BLM off road vehicle impact assessment, Ridgecrest, CA.

Archaeological Technician 2002-2003

Palm Desert BLM Project. Conducted arch. survey with duties including site reconnaissance and site recordation. Performed for the BLM off road vehicle impact assessment, Palm Desert, CA.

Archaeological Technician, 2002

Yosemite Falls Archeological Evaluation Project. Conducted site recordation and evaluation excavations of archaeological sites within the Yosemite Falls vicinity of Yosemite National Park.

Crew Chief/Field School "Chef" 2002

Cal Poly Field School. Conducted excavations, aided in teaching field school students the processes of excavation, and prepared meals for students and workers. Fort Hunter Ligget, CA

Archaeological Monitor 2002

Blythe Natural Gas Pipeline Project. Conducted arch. monitoring of pipeline construction. Blythe CA

Archaeological Technician 2001

Arroyo De Los Chinos project. Conducted excavations of prehistoric sites prior the anticipated re-alignment of Highway One north of San Simeon CA

Crew Chief/Field School "Chef" 2001

Cal Poly Field School. Conducted excavations, aided in teaching field school students the processes of excavation, and prepared meals for students and workers. Fort Hunter Ligget, CA

Publications

Selected Professional Reports and Contributions

2006 Sacramento International Airport EIS and EIR for Master Plan Improvements, Cultural Resources Technical Memo

2005 Archaeological Survey of +/- 74 Acres at 68591 Vineyard Canyon Road, Parkfield, Monterey County, California. Report submitted to a private client.

2005 Results of the Archaeological Monitoring for 480 Stimson Street, Pismo Beach, San Luis Obispo County, California. Report submitted to a private client.

2005 Archaeological Inventory Survey of 320 Acres, on Two Parcels, in Lockwood, Monterey County, California. Report submitted to a private client. (Authored with Todd Hannahs)

2005 Phase I Archaeological Inventory Survey of a ~3000' Utility Corridor along Highway 41 in Creston, San Luis Obispo County, California. Report Submitted to SBC.

2005 Phase I Archaeological Survey of +/- 5 Acres on Monterey Rd., Paso Robles, San Luis Obispo, California. Report submitted to a private client.

2005 Phase I Archaeological Survey of 5 acres at the Southwest Corner of 11th and N Streets in San Miguel, San Luis Obispo County, California. Report submitted to a private client.

2005 Phase I Archeological Survey of the Kenyon Property: 40 Acres at 75529 Deer Pass Road, Bradley, Monterey County, California. Report submitted to a private client.

2005 Results of the Archaeological Monitoring for the Spectrum at Shadow Hills Development, Indio, Riverside County, California. Report submitted to a private client.

2004 Phase I Archaeological Inventory Survey of 4880 Villa Creek Raod, Cayucos, San Luis Obispo County, California. Report Submitted to a private client.

2004 Phase I Archaeological Inventory Survey of 6550 Squire Knoll Road, San Luis Obispo County, California. Report Submitted to a private client.

2004 Phase I Archaeological Inventory Survey of Cingular Site VY-945-03 San Luis Obispo, San Luis Obispo County, California. Report submitted to a private client.

2004 Phase I Archaeological Inventory Survey of 2 Acres at 780-782 W. Tefft Street, Nipomo, San Luis Obispo

County, California. Report submitted to a private client.

2004 Jones, Terry L., Judith Porcasi, Kenneth W. Gobalet, and Leroy Laurie

CA-SLO-215: A Milling Stone _Expression at Morro Bay, San Luis Obispo County, California. In: Emerging from the Ice Age: Early Holocene Occupations on the California Coast. Edited by Ethan Bertrando and Valerie A. Levulett. San Luis Obispo County Archaeological Society Occasional Paper No. 17.

2003 Estero Bay, Limekiln, Morro Bay, Morro Strand, and Pismo Beach State Parks Archaeological Site Assessment: 2003. Submitted to the California Department of Parks and Recreation.

2002 Montana De Oro State Park Archaeological Site Assessment: 2002. Submitted to the California Department of Parks and Recreation.

2002 San Simeon State Park Archaeological Site Assessment: 2002. Submitted to the California Department of Parks and Recreation.

In Progress, Archaeological Monitoring Report for the Morro Bay State Park Campground Renovation Project, to be submitted to the California Department of Parks and Recreation.

In Progress Phase I Archaeological Survey of the Sea West Ranch, to be submitted to the California Department of Parks and Recreation.

Appendix C2: Culture Technical Reports
(Submitted under separate confidential cover)

Appendix D: Paleontological Resources

APPENDIX D
PALEONTOLOGICAL SENSITIVITY OF THE PROJECT AREA

The project area includes two topographic quadrangle maps; the Honker Bay quad, which includes Qoa (older surficial sediments), Qa (alluvial pebble gravel, sand and clay), and Qbm (bay mud) in the study area, and the Antioch North quad, which includes Qoa (oldest alluvium of Antioch and vicinity) and Qpm (peat and mud of tidal wetlands).

Comparison of the Dibblee geologic map of the Honker Bay quadrangle (Dibblee, 2006) with the Atwater geologic map of the Antioch North quadrangle (Atwater, 1982) shows that the Qbm and Qpm sediments are synonymous. Atwater (1982) provided two radiocarbon dates (890±80 and 540±120) on Qpm sediments to show that this unit is of Holocene age and is therefore of low paleontological sensitivity based on SVP guidelines. This unit lies to the west of the WPGS site. The Qoa sediment on the Antioch North quad is stated to be of Late Pleistocene age by Atwater (1982). This is confirmed by the UCMP records search as locality V6030, which produced Pleistocene vertebrate fossils, and is in the area mapped Qoa. As a result, the Qoa (oldest alluvium of Antioch and vicinity) is given a high sensitivity rating. The majority of the water supply and discharge pipelines on the Antioch North quad are within Qoa.

On the Dibblee map (Honker Bay), the Qbm (bay mud), like the Qpm sediments, is of Holocene age and is of low sensitivity for paleontological resources. On the Dibblee map, the Qoa and Qa sediments combined appear to be equivalent to Atwater's Qoa which was listed as Late Pleistocene and this is confirmed by the UCMP locality V6030, as described above.

The UCMP locality V91184 produced a Pleistocene fish skull. On the Dibblee map, this could be either Qa or Qoa. Since the Atwater map considers Qoa (which subsumes both the Qa and Qoa of Dibblee), to be of Pleistocene age, and both quads contain a Pleistocene fossil site in these sediments, both Qa and Qoa on the Dibblee map are considered to be of high sensitivity for paleontological resources.

The WPGS site and the portion of the water supply and discharge pipelines located between the WPGS and the rail yard, and the WPGS construction laydown and parking areas within the Pittsburg Power Plant Site are located within Qa. The portion of the water supply and discharge pipelines from the railyard to Maple Street (the eastern edge of the Honker Bay quad) are located within the Qoa on the Dibblee map. The portion of the pipelines on the Antioch quad between Maple Street and the Delta Diablo Sanitation District Wastewater Treatment Plant are located within the Qoa on the Atwater map.

REFERENCES

Atwater, B.F., 1982. Geologic Maps of the Sacramento-San Joaquin Delta, California. U.S. Geological Survey Miscellaneous Field Studies Map-1401.

Dibblee, T. W., Jr. 2006. Geologic map of the Vine Hill& Honker Bay Quadrangles, Contra Costa & Solano Counties, California. Dibblee Geology Center Map #DF-191.

Appendix E: Soils

APPENDIX E: SOILS

SOx and NOx are the two key air pollutants that cause acid rain. Acid rain can change soil chemistry, which can affect vegetation growth. Ambient air quality standards are developed to be protective of both human and biological health. Because the project meets local, state and federal air quality standards as described in Section 7.1, Air Quality, no adverse impacts to soils or vegetation are expected from the project's air emissions.

Appendix F: Transmission Systems Engineering

Appendix F1: Revised and New TSE Drawings

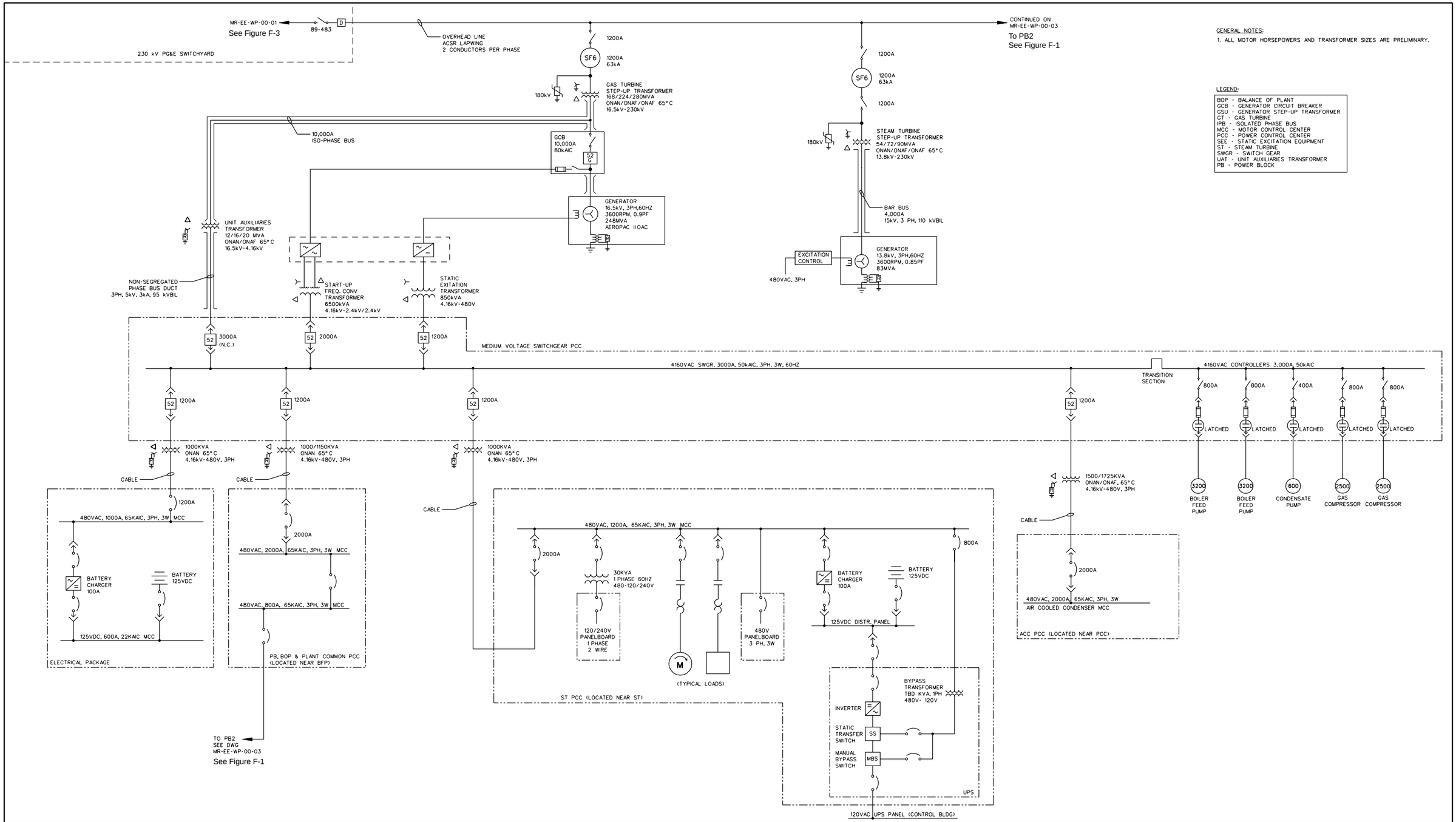

Source:
CH2MHill Lockwood Greene; Electrical Willow Pass Generating Station,
Combined Cycle PB1, Overall Single-Line Diagram;
Drawing No: MR-EE-WP-00-02 (Rev. P4, 09/08/08)

FLEX PLANT 10 – POWER BLOCK 1
OVERALL SINGLE LINE DIAGRAM

Willow Pass Generating Station
Mirant Willow Pass, LLC
Pittsburg, California

September 2008
28067343

URS

FIGURE 2.5-4 (REVISED)

9/24/08 vsa ..\T:\Mirant Pittburg-Willow Pass\Graphics\Data Adequacy\REV_2.5-4_FP10 PB1 single-line.ai

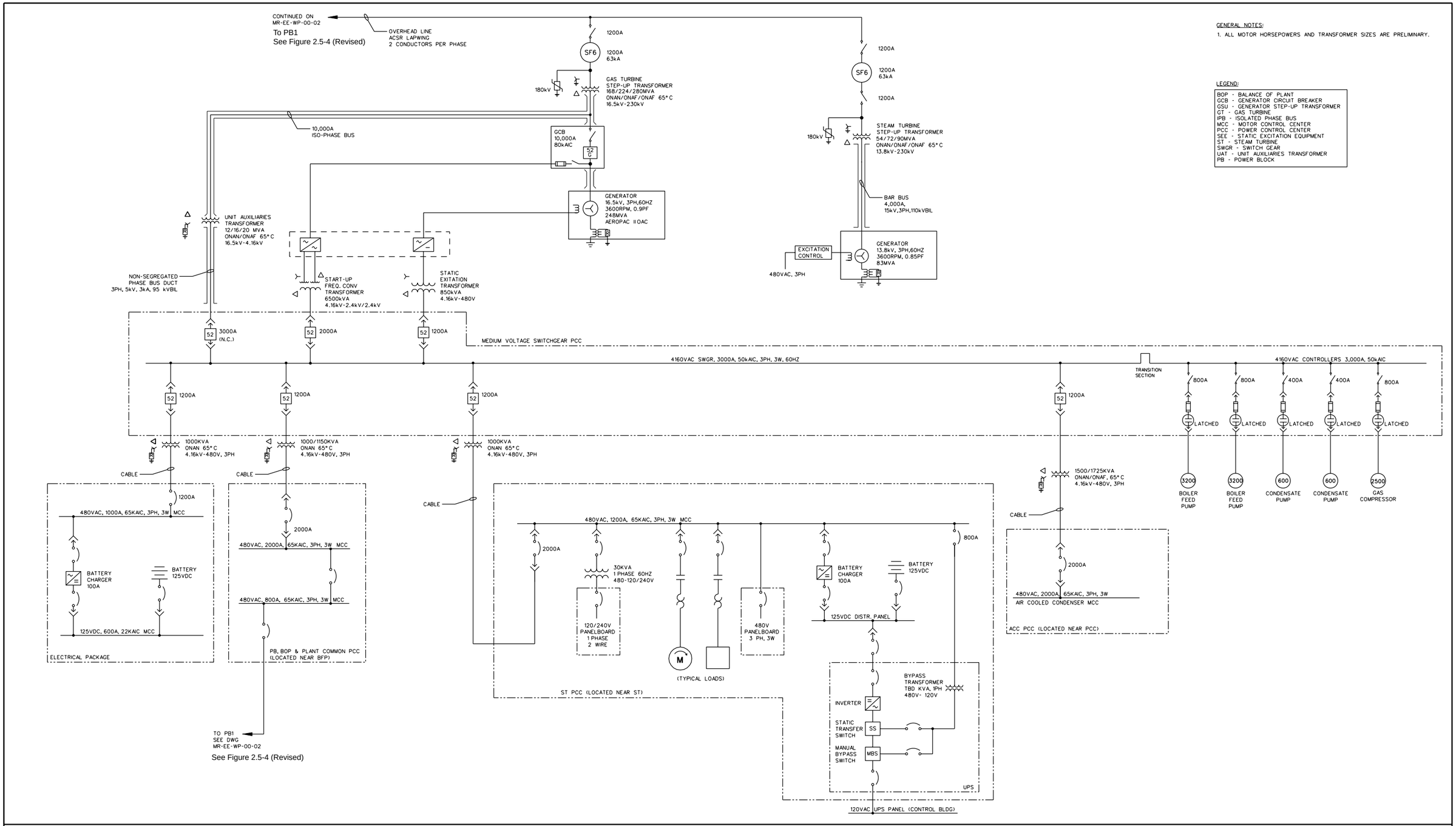

GENERAL NOTES:

1. ALL MOTOR HORSEPOWERS AND TRANSFORMER SIZES ARE PRELIMINARY.

LEGEND:

BOP - BALANCE OF PLANT
GCB - GENERATOR CIRCUIT BREAKER
GSU - GENERATOR STEP-UP TRANSFORMER
GT - GAS TURBINE
IPB - ISOLATED PHASE BUS
MCC - MOTOR CONTROL CENTER
PCC - POWER CONTROL CENTER
SEE - STATIC EXCITATION EQUIPMENT
ST - STEAM TURBINE
SWGR - SWITCH GEAR
UAT - UNIT AUXILIARIES TRANSFORMER
PB - POWER BLOCK

Source:
CH2MHill Lockwood Greene; Electrical Willow Pass Generating Station,
Combined Cycle PB2, Overall Single-Line Diagram;
Drawing No: MR-EE-WP-00-03 (Rev. P4, 09/08/08)

FLEX PLANT 10 – POWER BLOCK 2
OVERALL SINGLE LINE DIAGRAM

Willow Pass Generating Station
Mirant Willow Pass, LLC
Pittsburg, California

September 2008
28067343

URS

FIGURE F-1

9/24/08 vsa ..\T:\Mirant Pittburg-Willow Pass\Graphics\Data Adequacy\F-1_FP10 PB2_single-line.ai

GENERAL NOTES:

1. ALL MOTOR HORSEPOWERS AND TRANSFORMER SIZES ARE PRELIMINARY.

LEGEND:

BOP - BALANCE OF PLANT
GCB - GENERATOR CIRCUIT BREAKER
GSU - GENERATOR STEP-UP TRANSFORMER
GT - GAS TURBINE
IPB - ISOLATED PHASE BUS
MCC - MOTOR CONTROL CENTER
PCC - POWER CONTROL CENTER
SEE - STATIC EXCITATION EQUIPMENT
ST - STEAM TURBINE
SWGR - SWITCH GEAR
UAT - UNIT AUXILIARIES TRANSFORMER
PB - POWER BLOCK

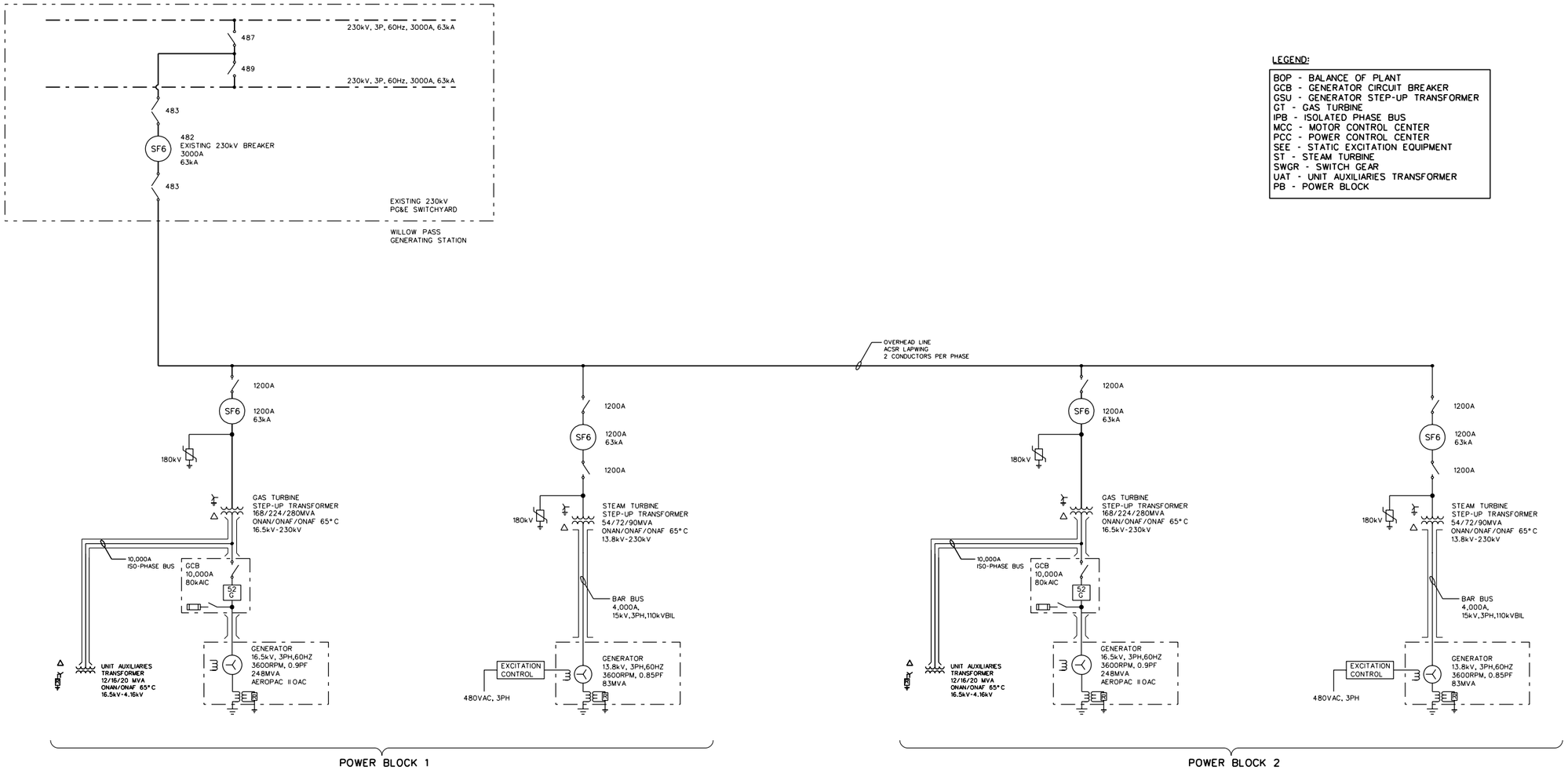

Source:
CH2MHill Lockwood Greene; Electrical Willow Pass Generating Station,
Combined Cycle, Overall Plant Single-Line Diagram;
Drawing No: MR-EE-WP-00-04 (Rev. P2, 09/22/08)

OVERALL PLANT SINGLE LINE DIAGRAM

Willow Pass Generating Station
Mirant Willow Pass, LLC
Pittsburg, California

September 2008
28067343

URS

FIGURE F-2

9/24/08 vsa ..\T:\Mirant Pittburg-Willow Pass\Graphics\Data Adequacy\F-2_overall plant single-line.ai

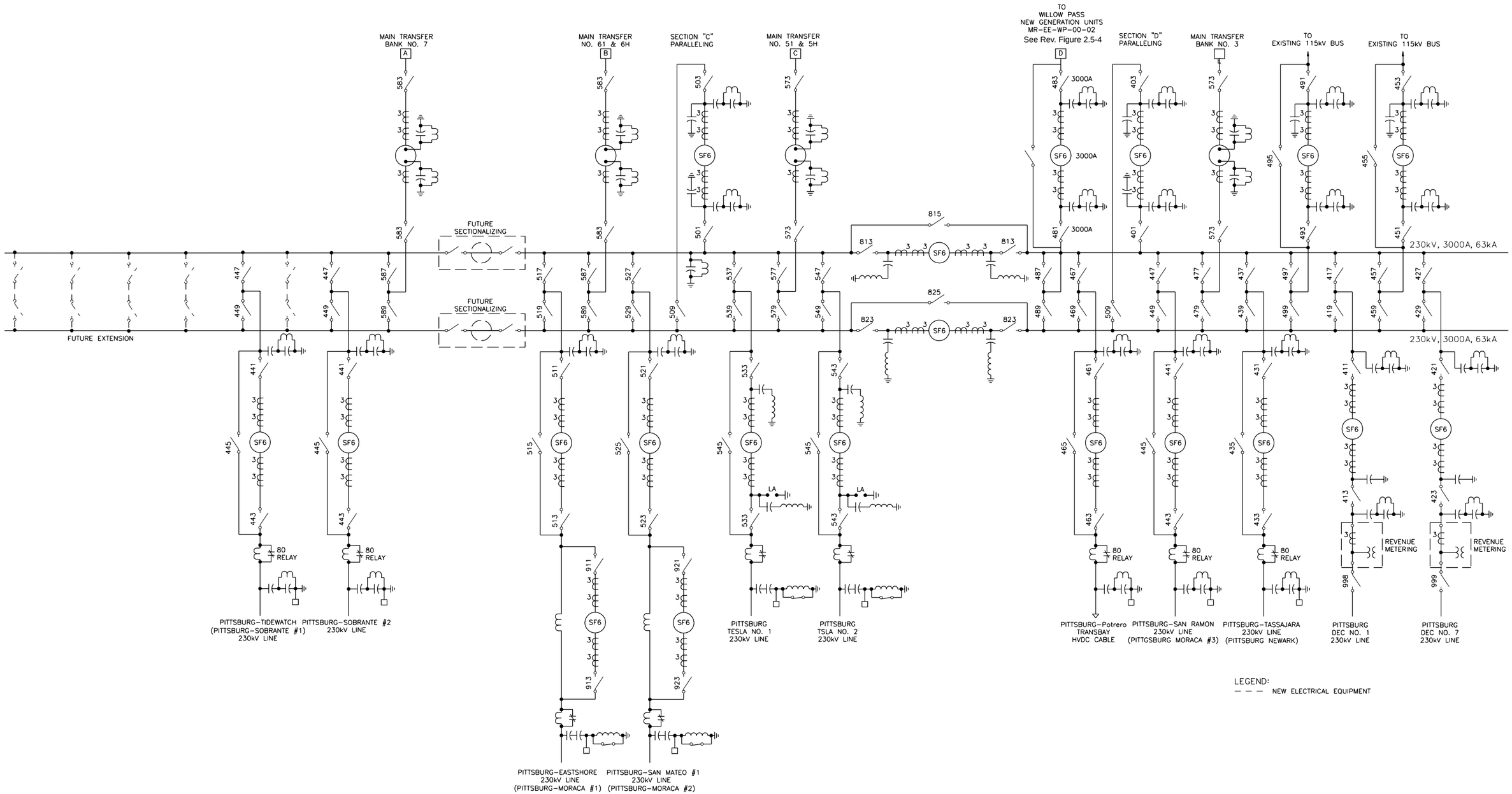

Source:
CH2MHill Lockwood Greene; Electrical Willow Pass Generating Station,
Switchyard, Single-Line Diagram;
Drawing No: MR-EE-WP-00-01 (Rev. P4, 09/22/08)

SWITCHYARD WITH WPGS
SINGLE LINE DIAGRAM

Willow Pass Generating Station
Mirant Willow Pass, LLC
Pittsburg, California

September 2008
28067343

URS

FIGURE F-3

9/24/08 vsa ..\T:\Mirant Pittburg-Willow Pass\Graphics\Data Adequacy\F-3_switchyard_single-line_p4.ai

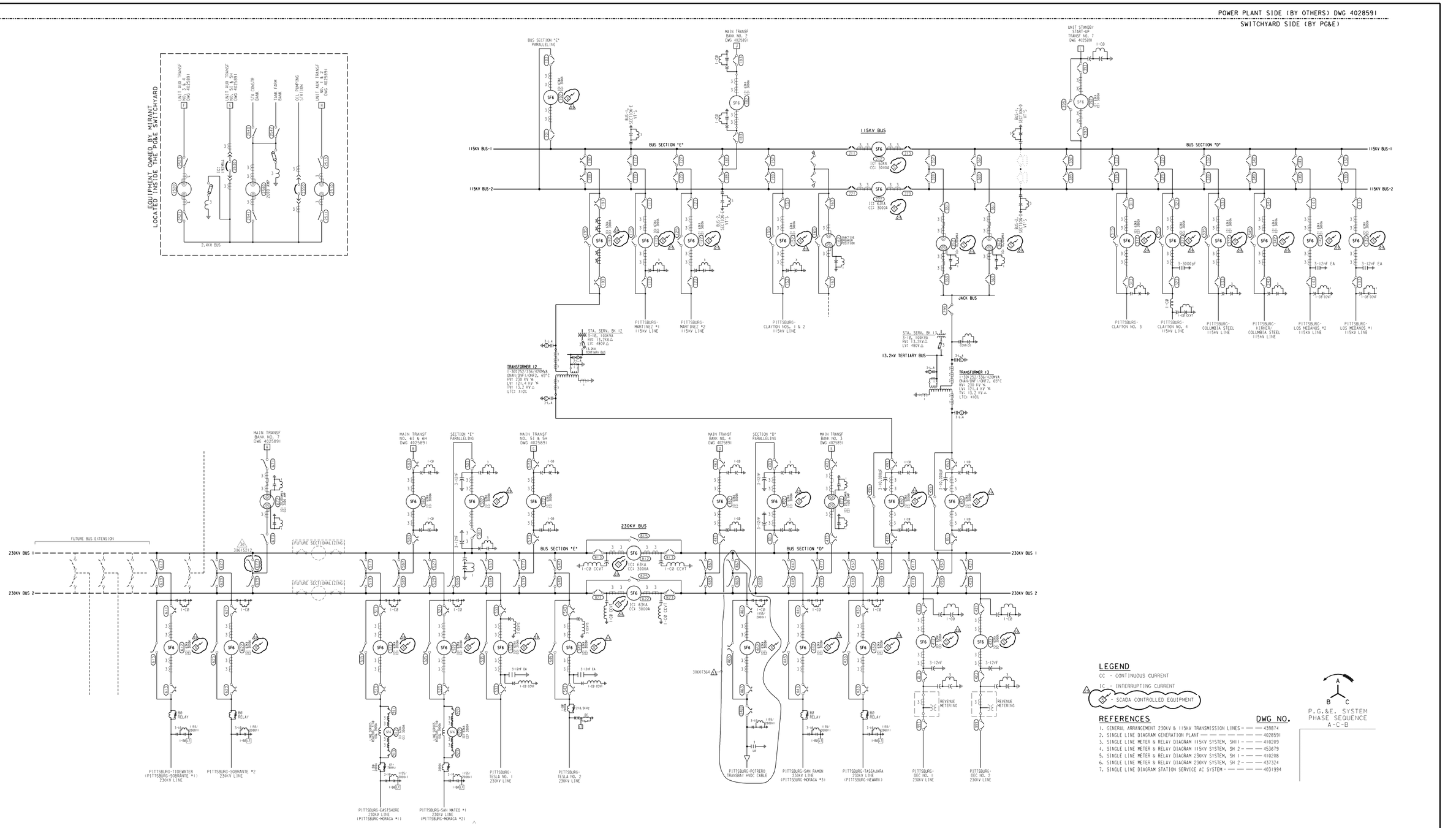

Source:
Pacific Gas and Electric Company, Pittsburg Power Plant
Single-Line Diagram;
Drawing No. 57907 (Rev. 31. 8/14/08)

EXISTING PITTSBURG POWER PLANT
PG&E SWITCHYARD SINGLE LINE DIAGRAM

Willow Pass Generating Station
Mirant Willow Pass, LLC
Pittsburg, California

September 2008
28067343

URS

FIGURE F-4

8/24/08 vsa ..\T:\Mirant Pittburg-Willow Pass\Graphics\Data Adequacy\F-4_PGE single-line_tif.ai

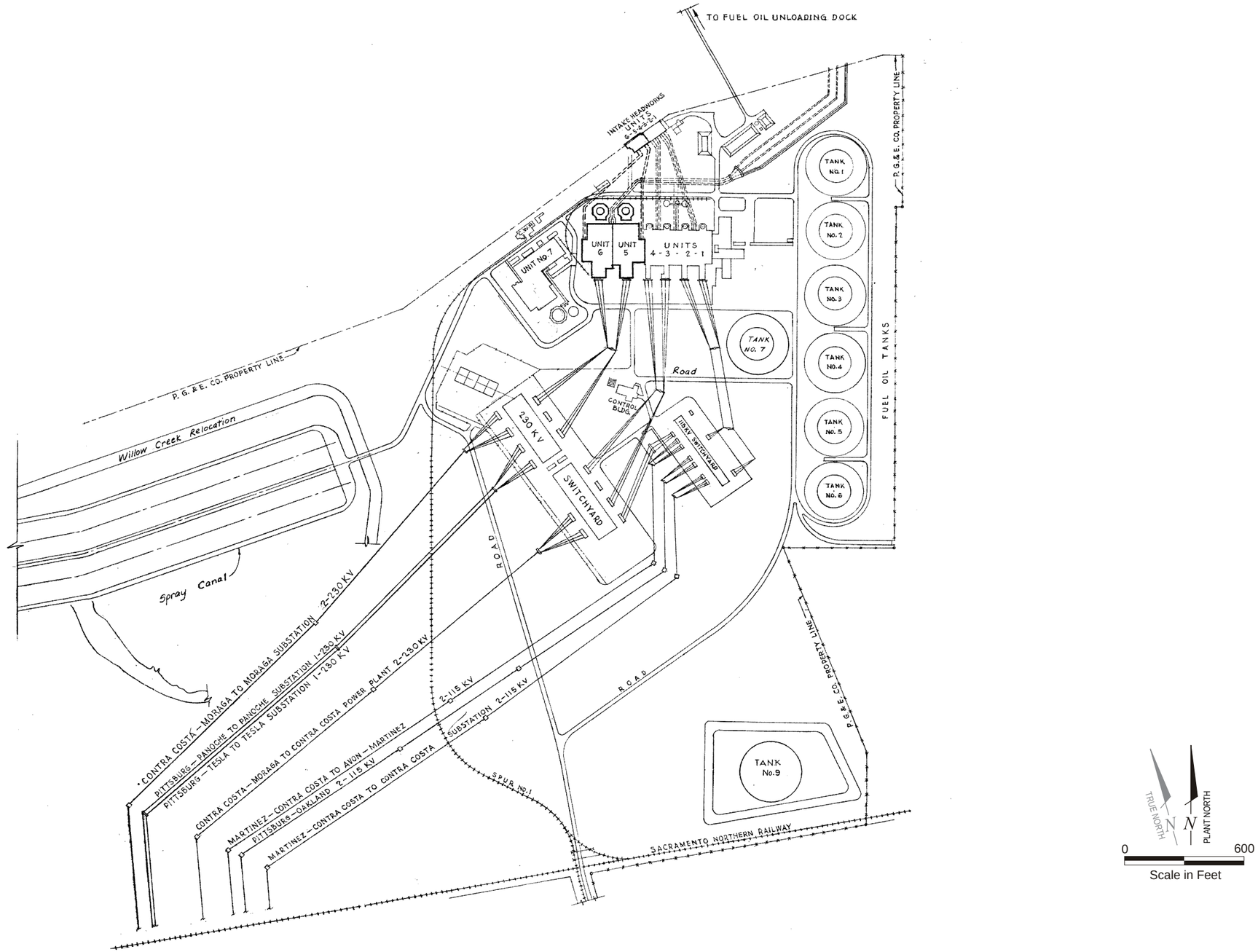

Source:
Pacific Gas and Electric Company, Pittsburg Power Plant,
General Plan, Units No. 5 and 6
Drawing No: 420535

EXISTING PITTSBURG POWER PLANT SWITCHYARD LAYOUT

Willow Pass Generating Station
Mirant Willow Pass, LLC
Pittsburg, California

September 2008
28067343

URS

FIGURE F-5

8/24/08 vsa ..\T:\Mirant Pittburg-Willow Pass\Graphics\Data Adequacy\F-5_exist switchyard layout.ai

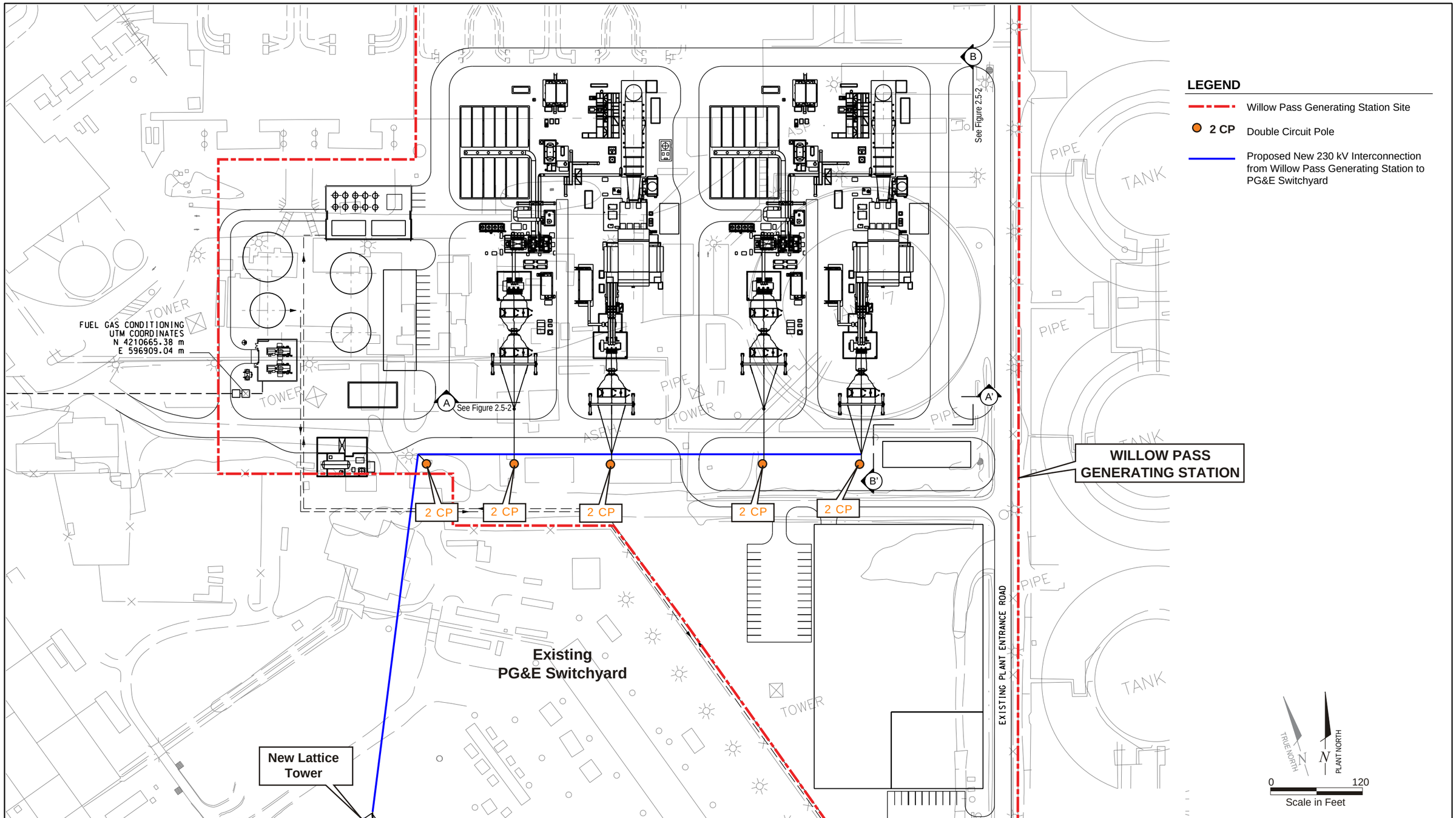

Source:
CH2MHill Lockwood Greene; General Arrangement Willow Pass Generating Station
Combined Cycle Siemens Flex 10s Equipment Layout;
Drawing No: MR-GA-PT-01-13 (Rev. E, 06/20/08)

ELECTRICAL INTERCONNECTION TO THE PG&E SWITCHYARD

Willow Pass Generating Station
Mirant Willow Pass, LLC
Pittsburg, California

September 2008
28067343

URS

FIGURE 4-1 (REVISED)

9/24/08 vsa ..\T:\Mirant Pittsburg-Willow Pass\Graphics\Data Adequacy\REV_4-1_interconnect_sept08.ai

Appendix F2: System Impact Study
(Submitted under separate cover)

Appendix G: Visual Resources - Table 7.11-8 (Revised)

Table 7.11-8 (Revised)
Involved Agencies and Agency Contacts

ISSUE	AGENCY/ADDRESS	CONTACT/TITLE	TELEPHONE/EMAIL
Height variances Outdoor lighting	City of Pittsburg, Planning Department 65 Civic Avenue Pittsburg, CA 94565	Marc Grisham, Director of Planning	(925) 252-6920 mgrisham@ci.pittsburg.ca.us
Height variance Outdoor lighting	City of Pittsburg, Planning Department 65 Civic Avenue Pittsburg, CA 94565	Kristin Vahl, Associate Planner	(925) 252-6941 kvahl@ci.pittsburg.ca.us
Selection of representative KOPs within VSOI	California Energy Commission Energy Facilities Siting Division 1516 9th Street, MS 40 Sacramento, California 95814-5504	Jim Adams, Environmental Planner	(916) 653-0702
Selection of representative KOPs within VSOI	California Energy Commission Energy Facilities Siting Division 1516 9th Street, MS 40 Sacramento, California 95814-5512	Paula David, Community Resources Supervisor	(916) 654-4228