CROCKETT COGENERATION PROJECT

(92-AFC-1C)

PETITION TO AMEND

THE CALFORNIA ENERGY COMMISSION

FINAL DECISION

SUPPLEMENTAL DATA
SUBMITTED JANUARY 12-20, 2012

Socioeconomics

Question 1: Will the proposed modifications require any additional operational workers to be hired?

Answer: No additional personnel will be required to operate the fuel compression equipment. The fuel compression equipment will have sufficient automation so it can be controlled from the plant's Control Room. In addition, the current plant staffing includes a couple of outside operators that are continuously monitoring the equipment operation.

Visual Resources

Question 1: Can you provide height information about the equipment and a conceptual elevation depicting how the equipment will fit in with the existing facilities where the equipment is proposed to be located?

Answer : The height of the acoustical enclosure will be approximately 12 feet with a sloping roof.

I am attaching two files showing the compressor location before and after. As you can see, this spot is tucked in an area making views of it from a decent distance almost non-existent. This is the only decent location to shoot a photo and do a rendering from. This also demonstrates just how invisible the compression equipment will be to the outside world. It is dwarfed and surrounded by taller equipment/ structures.

See attachments 1 and 2: Proposed Compressor Location (current) and Proposed Compressor Location (rendering).

Hazardous Materials

Question 1: Can you provide a brief discussion of the applicability of NFPA 56PS: Standard for Fire and Explosion Prevention During Cleaning and Purging of Flammable Gas Piping Systems to the proposed project and if/how the project owner intends to comply with the Provisional Standard?

Answer: NFPA 56PS is applicable to this project in the sense that the project involves cutting and welding onto the natural gas pipeline that feeds the fuel to the gas turbine. In that context, NFPA 56PS is applicable to the purging of the line before it is worked on and after the work is completed as it will required to be blown down to make sure that the line is free from debris before the gas can be re-introduced into the gas turbine.

Crockett is insuring compliance with NFPA56PS by:

- Crockett will utilize a mechanical contractor that is intimately familiar and experienced with NFPA 56PS and the applicable processes of emptying and purging gas pipelines before and after cutting and welding activities take place. The contractor will utilize pipefitters and code welders that are familiar with the requirements of NFPA 56PS.
- All purging and gas blowing will be accomplished by using oil-free air compressors.
- A safety coordinator who is also intimately familiar with NFPA 56PS will be on site coordinating these activities.
- A Standard Operating Procedure (SOP) will be produced for these particular parts of the project. This SOP will incorporate the requirements from NFPA 56PS as well as other codes and standards and will be part of the Fire Safety Plan to be reviewed and approved by the Contra Costa County Fire Department Fire Chief in the City of Crockett.
- As part of the Daily Safety Briefing we will hold a Contractor Safety Orientation that will insure

that everybody involved in the project will be required to become familiar with the SOP and Fire Safety Plan.

Geology

Question Geo-1: Please explain why the foundation type changed from that recommended in the geotechnical report.

Answer Geo-1: When the description of the foundation design was written, the prevailing idea was to use the Chance Helical Pier. At that time, the Geotech report had not yet been received. Based on the Geotech report, the project owner is proposing two options; one being a shallow mat using micro piers and the other being a thicker slab on a 6 foot excavation re-filled and compacted. Project Owner is preparing a final design that is compatible with both options.

Question Geo-2: Please provide the plans indicating the deep foundation was designed by a professional engineer.

Answer Geo-2: Please see attached drawings for the design of the foundation options described above. These are preliminary drawings subject to final revisions.

Question Geo-3: Please provide the following:
1) a detailed description of the "micro piles"
2) the method of installation of the micro piles
3) whether or not the micro piles will extend into stiff native soils
4) whether or not the micro piles are to be constructed in drill borings
5) address provision of information for soil characterization and subsequent disposal methods of the drillspoils (as applicable).

Answer Geo-3:

1) No micro piles will be used in the chosen foundation. The foundation will be Option 2 detailed on drawing S2.15. Project owner should get final foundation drawings from Project owner's engineering consultant, Cannon Corp., by January 27, 2012.
2) N/A. See response to question 1, above.
3) N/A. See response to question 1, above.
4) N/A. See response to question 1, above.
5) Amec, the project owner's geotechnical consultant, has been contracted to do boring, sampling and testing of the existing soil for waste characterization in the event that some of the soil needs to be landfilled. In the event that excavated soil needs to be landfilled, if such soil is determined to be hazardous it will be sent to US Ecology, Inc.'s Hazardous Waste Treatment and Disposal Facility located in Beatty, Nevada.

If some of the excavated soil needs to be landfilled and it is not characterized as hazardous, it will be transported to the Canyon landfill located in Pittsburg, California for disposal.
According to the foundation Design (Option 2, Drawing S2.15), the maximum estimated amount of soil that may need to be landfilled is approximately 2,700 cubic feet. This is approximately 5 truckloads of soil. Please note that it is project owner's

Water

Question Water-1: Please explain how the equipment will be cooled.

Answer Water-1: There will be no water needed for cooling of the equipment. The only cooling needed will be for the lube oil of the compressor and that will be handled by an oil/air heat exchanger.

Question Water-2: If the equipment will be cooled using evaporative processes, please provide a description of the coolers and how much water is anticipated to be required.

Answer Water-2: N/A.
Attachment 1: Proposed Compressor Location (current)

Attachment 2: Proposed Compressor Location (rendering)

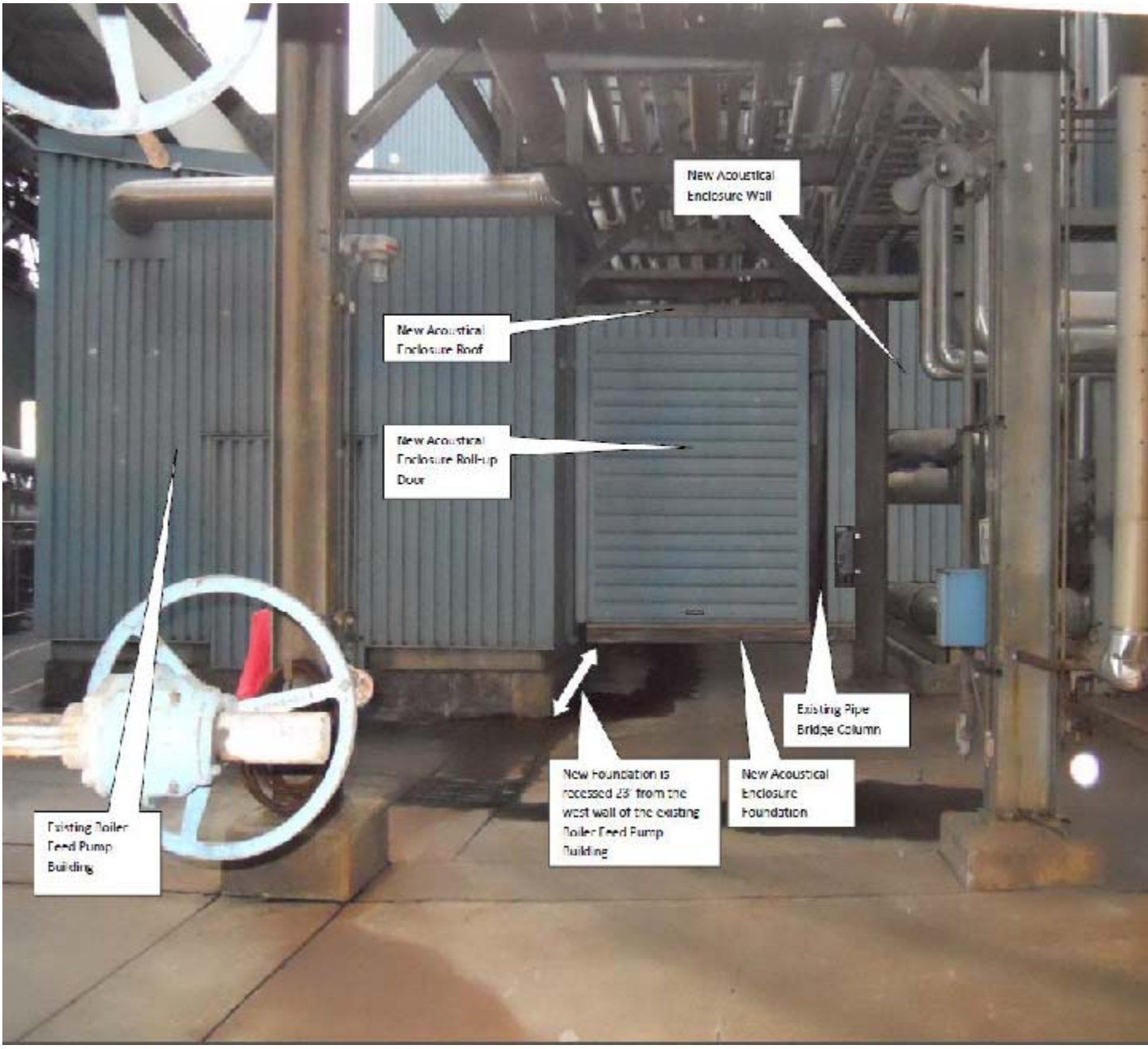

Attachment 3: Compressor Building Foundation Plan Options and Structural Details (subject to final revisions)

GENERAL NOTES

1. CONSTRUCTION SHALL COMPLY WITH THE LATEST EDITION OF THE CALIFORNIA BUILDING CODE (CBC), IBC STANDARDS, IBC ADOPTED STANDARDS, AND IBC RECOGNIZED STANDARDS AS LISTED ON PREVIOUS PAGE.
2. THE CONSTRUCTION DOCUMENTS REPRESENT THE FINISHED STRUCTURE AND DO NOT INDICATE METHODS, PROCEDURES OR SEQUENCE OF CONSTRUCTION. IT IS THE RESPONSIBILITY OF THE CONTRACTOR TO TAKE NECESSARY PRECAUTIONS TO MAINTAIN AND ENSURE THE INTEGRITY OF THE STRUCTURE DURING CONSTRUCTION. NEITHER THE OWNER NOR ARCHITECT OR STRUCTURAL ENGINEER WILL ENFORCE SAFETY MEASURES OR REGULATIONS. IT IS THE RESPONSIBILITY OF THE CONTRACTOR TO DESIGN, CONSTRUCT AND MAINTAIN ALL SAFETY DEVICES, INCLUDING BUT NOT LIMITED TO TEMPORARY GUARDRAILS, SHORING AND BRACING. THE CONTRACTOR SHALL BE SOLELY RESPONSIBLE FOR CONFORMING TO LOCAL, STATE AND FEDERAL SAFETY AND HEALTH STANDARDS, LAWS AND REGULATIONS.
3. PROVIDE INSPECTIONS IN ACCORDANCE WITH CBC SECTION 108.4 AND AS SPECIFIED IN "TESTS AND SPECIAL INSPECTIONS". NOTES PROVIDED.
4. IT IS THE RESPONSIBILITY OF THE CONTRACTOR TO COORDINATE THE WORK OF THE SUB-CONTRACTORS AND TO CHECK DIMENSIONS. DISCREPANCIES SHALL BE CONVEYED TO THE ATTENTION OF THE ARCHITECT AND THE STRUCTURAL ENGINEER IN A TIMELY MANNER TO BE RESOLVED BEFORE PROCEEDING.
5. STRUCTURAL MEMBERS SHALL NOT BE CUT, NOTCHED OR OTHERWISE PENETRATED UNLESS SPECIFICALLY APPROVED BY THE STRUCTURAL ENGINEER IN ADVANCE OR SHOWN ON THESE DRAWINGS. NO CHANGES ARE TO BE MADE TO THESE PLANS WITHOUT THE KNOWLEDGE AND WRITTEN CONSENT OF THE STRUCTURAL ENGINEER MATERIALS SHALL BE FURNISHED AS SHOWN HEREIN UNLESS EQUAL ALTERNATES ARE APPROVED IN WRITING BY THE OWNER AND THE STRUCTURAL ENGINEER.
6. DETAILS NOT SPECIFICALLY SHOWN SHALL BE SIMILAR TO DETAILS FOR SIMILAR CONSTRUCTION SHOWN ON THESE DRAWINGS.
7. TYPICAL DETAILS SHALL APPLY UNLESS NOTED OTHERWISE ON THE DRAWINGS.
8. WHERE THE GENERAL NOTES AND THE TYPICAL DETAILS ARE IN CONFLICT WITH THE SPECIFICATIONS, THE GENERAL NOTES AND TYPICAL DETAILS SHALL GOVERN. NOTES AND DETAILS WITHIN THESE DRAWINGS TAKE PRECEDENCE OVER GENERAL NOTES.
9. DO NOT SCALE DRAWINGS. DRAWING SCALES GIVEN ARE APPROXIMATE. DIMENSIONS AND ELEVATIONS MUST BE VERIFIED WITH ARCHITECTURAL DRAWINGS. DISCREPANCIES SHALL BE CONVEYED TO THE ARCHITECT AND THE STRUCTURAL ENGINEER TO BE RESOLVED PRIOR TO PROCEEDING.
10. REFER TO ARCHITECTURAL AND CIVIL DRAWINGS FOR DIMENSIONS, SLOPES, DEPRESSIONS AND OTHER INFORMATION NOT SPECIFICALLY SHOWN ON THE STRUCTURAL DRAWINGS.
11. OPENINGS, POCKETS, ETC. SHALL NOT BE PLACED IN FOUNDATIONS, SLABS, WALLS, SHEAR WALLS, DECKS GIRDERS, BEAMS, JOISTS, COLUMNS, ETC. UNLESS SPECIFICALLY DETAILED ON THE STRUCTURAL DRAWINGS. NOTIFY THE STRUCTURAL ENGINEER IF MECHANICAL OR OTHER DRAWINGS SHOW OPENINGS, POCKETS, ETC. WHICH ARE NOT SHOWN ON THE STRUCTURAL DRAWINGS.
12. IT IS THE RESPONSIBILITY OF THE CONTRACTOR TO LOCATE EXISTING UTILITIES WHETHER SHOWN HEREON OR NOT, AND TO PROTECT THEM FROM FROM DAMAGE. THE CONTRACTOR SHALL BEAR THE EXPENSE OF REPAIR OR REPLACEMENT IN CONJUNCTION WITH THE EXECUTION OF THIS WORK.
13. IT IS THE RESPONSIBILITY OF THE CONTRACTOR TO COORDINATE DETAILS TO AVOID THE INTERFERENCE OF EMBEDDED ITEMS, INCLUDING BUT NOT LIMITED TO REINFORCING STEEL, PRE-STRESSED STEEL AND HARDWARE AS WELL AS MISCELLANEOUS STEEL AND CONDUITS.
14. UNLESS SPECIFICALLY SHOWN OR NOTED ON THE STRUCTURAL DRAWINGS, ANCHOR BOLTS OR INSETS FOR EQUIPMENT ANCHORAGE OR INSTALLATION SHALL BE DESIGNED BY A CIVIL OR STRUCTURAL ENGINEER REGISTERED IN THE STATE OF CALIFORNIA, AND SHALL BE SHOWN ON THE MECHANICAL AND/OR ELECTRICAL DRAWINGS.
15. GENERAL CONTRACTOR SHALL VISIT THE JOB SITE AND VERIFY ALL GRADES, DIMENSIONS, AND CONDITIONS PRIOR TO BIDDING AND COMMENCING CONSTRUCTION. DIMENSIONS CONTROLLED BY EXISTING CONDITIONS SHALL BE VERIFIED BY THE CONTRACTOR AT THE SITE.
16. CONNECTIONS OF ITEMS SUPPORTED BY THE STRUCTURE ARE THE RESPONSIBILITY OF THE DISCIPLINES WHO ARE MAKING THESE ATTACHMENTS. THESE ATTACHMENTS SHALL BE DESIGNED TO RESIST GRAVITY, WIND, SEISMIC, THERMAL LOADS, ETC.
17. UNLESS SPECIFICALLY NOTED, VIBRATION EFFECTS OF MECHANICAL EQUIPMENT HAS NOT BEEN CONSIDERED BY THE STRUCTURAL ENGINEER.
18. MATERIALS USED IN THIS DESIGN MAY BE HAZARDOUS TO ONES HEALTH. THE CONTRACTOR SHALL ACCEPT ALL RESPONSIBILITY AND SHALL POST SUCH WARNING DURING CONSTRUCTION.
19. THE WORDS "INSPECT", "VERIFY", "TEST", AND "APPROVE" AS USED ON THESE PLANS AND SPECIFICATIONS REPRESENT THAT THE PROJECT ENGINEER OR PROJECT GEOTECHNICAL ENGINEER HAVE PERFORMED TESTS, INSPECTIONS AND OBSERVATIONS ON BEHALF OF THE OWNER TO HAVE REASONABLE CERTAINTY THAT, IN THEIR PROFESSIONAL OPINION, THE CONTRACTOR'S WORK HAS BEEN PERFORMED IN SUBSTANTIAL CONFORMANCE WITH THESE PLANS AND SPECIFICATIONS. THE CONTRACTOR IS SOLELY RESPONSIBLE FOR FULL COMPLIANCE WITH THE CONTRACT DOCUMENTS. THE ENGINEER WILL NEITHER DIRECT NOR TAKE RESPONSIBILITY OF THE CONTRACTOR'S WORK OR OBLIGATIONS.

DESIGN CRITERIA

1. GEOTECHNICAL
   REPORT BY: AMEC GEOMATRIX INC.
   PROJECT No. OD 1116201.000
   DATED: DECEMBER 6, 2011
2. CODE
   2010 CALIFORNIA BUILDING CODE (CBC) AND REFERENCED CODES
3. LATERAL SYSTEM
   ROOF DIAPHRAGM: PER MFR
   STRUCTURAL SYSTEM: PER MFR
4. GRAVITY LOADS

LOCATION	DEAD (PSF)	LIVE (PSF)	MISC.
ROOF	PER MFR	PER MFR	
FLOOR:		50	

5. WIND
   85 MPH WITH 3 SECOND GUST
   EXPOSURE C
   I = 1.5
6. SEISMIC
   SITE CLASS = D
   OCCUPANCY CATEGORY = III
   S_s = 1.5
   F_a = 1.0
   S_{MS} = 1.5
   S_1 = 0.6
   F_v = 1.5
   S_{M1} = 0.9
   R = PER MFR
   I = 1.25
7. SNOW
   NO SNOW LOAD
8. FLOOD
   NO FLOOD LOAD
9. DEFLECTION

LOCATION	TOTAL LOAD	LIVE LOAD	SHORT TERM LOAD
ROOF	L/240	L/360	
WALLS			L/180

MATERIAL PROPERTIES

1. REINFORCING STEEL
   TYPICAL REINFORCING: ASTM A615, GRADE 60
   WELDED REINFORCING: ASTM A706, GRADE 60
   WELDED WIRE FABRIC: ASTM A185
2. CONCRETE

	F'c, PSI 28-DAY	MAX. SLUMP	MAX. W/C RATIO
FOUNDATIONS	3,000	4±1	0.50
SLAB-ON-GRADE	3,000	4±1	0.50
BEAMS & COLS.	3,000	4±1	0.45
STRUC. SLABS	4,000	4±1	0.45

   AGGREGATE SHALL CONFORM TO ASTM C33 CEMENT SHALL BE ASTM C150, TYPE I OR TYPE II. WHERE GEOTECHNICAL REPORT HAS DETERMINED THAT CONCRETE WILL BE EXPOSED TO SULFATES, MIX DESIGN SHALL COMPLY WITH ACI TABLE 4.3.1
3. STRUCTURAL STEEL

COMPONENTS	YIELD Fy, KSI	ASTM
PLATES & MISC PIECES	36	A36
ANGLES & CHANNELS	36	A36
ROLLED SHAPES	50	A992
PIPE SECTIONS	35	A53, TYPE E, GRADE B
STRUCTURAL TUBING (TS & HSS)	46	A500, GRADE B

4. FASTENERS
   ANCHOR BOLTS & THREADED ROD: F1554 GRADE 36 (TYP UNO) OR GRADE 55
   MACHINE BOLTS: A307 W/ SUPPLEMENT S1
   HIGH STRENGTH STRUCTURAL BOLTS: A325 (TYP. UNO) OR A490
5. NON-SHRINK GROUT
   28-DAY COMPRESSIVE STRENGTH, f'c = 5,000 PSI (ASTM C109)

FOUNDATIONS

1. THE ELEVATIONS OF FOUNDATIONS AS SHOWN ON THESE DRAWINGS INDICATE THE ESTIMATED MINIMUM FOUNDATION DEPTHS. ELEVATIONS SHOWN ARE FOR BIDDING PURPOSES ONLY AND ARE ASSUMED TO BE IN SUITABLE BEARING MATERIAL. ADEQUACY OF THE BEARING MATERIALS AND ANY REQUIRED OVER EXCAVATION AND COMPACTION SHALL BE DETERMINED BY THE GEOTECHNICAL ENGINEER PRIOR TO THE PLACING OF REINFORCING STEEL AND CONCRETE.
2. IT IS THE RESPONSIBILITY OF THE CONTRACTOR TO PROVIDE THE DESIGN AND INSTALLATION OF ANY CRIBBING, SHEATHING AND SHORING REQUIRED TO SAFELY RETAIN EARTH BANKS DURING EXCAVATION AND FOR FORMING AND PLACEMENT OF CONCRETE. CUTS AND SLOPES TO MEET REQUIREMENTS OF THE GEOTECHNICAL REPORT.
3. THE BOTTOM OF FOOTINGS SHALL BE LEVEL. CHANGES IN FOOTING ELEVATIONS SHALL BE MADE UTILIZING THE TYPICAL FOOTING STEP DETAIL WITHIN THESE DRAWINGS.
4. CENTER FOOTINGS UNDER WALLS OR COLUMNS UNLESS OTHERWISE INDICATED ON THESE DRWAINGS.
5. DEWATER FOOTING AND BUILDING EXCAVATIONS AS REQUIRED TO MAINTAIN DRY WORKING CONDITIONS.
6. EXCAVATIONS SHALL BE PROPERLY BACKFILLED. DO NOT PLACE BACKFILL BEHIND RETAINING WALLS BEFORE CONCRETE AND/OR MASONRY HAS ATTAINED SPECIFIED 28-DAY COMPRESSIVE STRENGTH. CONTRACTOR SHALL BRACE OR PROTECT BUILDING AND PIT WALLS BELOW GRADES FROM LATERAL LOADS UNTIL SUPPORTING FLOORS AND OR ROOFS ARE IN PLACE AND HAVE ATTAINED FULL STRENGTH.
7. FOOTING AND UTILITY TRENCH BACKFILL WITHIN BUILDING AREA SHALL BE MECHANICALLY COMPACTTED IN LAYERS TO THE APPROVAL OF THE GEOTECHNICAL ENGINEER. FLOODING WILL NOT BE PERMITTED.
8. ABANDONDED FOOTINGS, UTILITIES, ETC. THAT INTERFERE WITH NEW CONSTRUCTION SHALL BE REMOVED.
9. IT IS THE RESPONSIBILITY OF THE CONTRACTOR TO DESIGN AND CONSTRUCT PERMANENT SHORING, BRACING, UNDERPINNING, ETC. OF ADJACENT PROPERTIES AND BUILDINGS PER THE CBC.
10. FOOTING ELEVATIONS SHALL BE LOCATED SUCH THAT THE BASES OF THE BUILDING FOUNDATIONS ARE A MINIMUM HORIZONTAL DISTANCE FROM THE FACE OF THE SLOPE PER CBC AND/OR LOCAL JURISDICTION.
11. AVOID FOOTING PENETRATIONS AND TRENCHING NEAR FOOTINGS. WHERE UNAVOIDABLE, SEE TYPICAL PIPE AND TRENCH DETAILS.
12. IT IS THE RESPONSIBILITY OF THE CONTRACTOR TO BE FAMILIAR WITH AND OBTAIN A COPY OF THE GEOTECHNICAL REPORT AND RETAIN ON SITE AT ALL TIMES.
13. SITE PREPARATION, FILLING, BACKFILLING AND ANY OVEREXCAVATION/RECOMPACTION OR DEEP COMPACTION OF SOILS SHALL BE PERFORMED PER RECOMMENDATIONS PRESENTED IN THE GEOTECHNICAL REPORT AND INSPECTED AND APPROVED BY THE PROJECT GEOTECHNICAL ENGINEER PRIOR TO EXCAVATING AND FORMING OF FOOTINGS. FOOTING EXCAVATIONS SHALL BE INSPECTED AND APPROVED BY THE GEOTECHNICAL ENGINEER PRIOR TO PLACEMENT OF REINFORCING.
14. THE FOUNDATION PLAN AND RELATED DETAILS SHALL BE REVIEWED AND APPROVED BY THE GEOTECHNICAL ENGINEER PRIOR TO APPROVAL BY THE LOCAL BUILDING OFFICIAL.
15. EMBEDED ITEMS MUST BE TIED IN PLACE PRIOR TO FOUNDATION INSPECTION.

REINFORCING STEEL

1. DETAILING, FABRICATION AND ERECTION OF REINFORCING BARS SHALL CONFORM TO THE REQUIREMENTS OF THE ACI MANUAL OF STANDARD PRACTICE FOR DETAILING REINFORCED CONCRETE STRUCTURES ACI 315, LATEST EDITION.
2. WELDING OF REINFORCING STEEL, WHERE SPECIFICALLY NOTED OR DETAILED, SHALL CONFORM TO IBC STANDARDS AND AWS STANDARDS, USING LOW HYDROGEN ELECTRODES.
3. TO HOLD REINFORCING BARS IN THEIR TRUE POSITION AND PREVENT DISPLACEMENT, STANDARD TIE AND ANCHORAGE DEVICES MUST BE PROVIDED. PLACING OF REINFORCEMENT SHALL CONFORM TO THE CBC.
4. ALL REINFORCING BAR BENDS SHALL BE MADE COLD. REINFORCING BARS SHALL NOT BE RE-BENT WITHOUT APPROVAL OF STRUCTURAL ENGINEER.
5. LAP SPLICES FOR REINFORCING BARS SHALL BE PER THE REINFORCING SCHEDULE ON THESE DRAWINGS. WIRE BARS TOGETHER AT LAPS OR SPLICES. STAGGER LAPS IN ADJACENT HORIZONTAL OR SLOPING REINFORCING BARS A MINIMUM OF THE REQUIRED SPLICE LENGTH. SPLICES AT OTHER LOCATIONS SHALL BE REVIEWED BY THE STRUCTURAL ENGINEER ALL VERTICAL WALL REINFORCEMENT SHALL BE CONTINUOUS BETWEEN SPLICE LOCATIONS SHOWN IN THE DETAILS.
6. REINFORCING STEEL SHALL BE CLEAN, FREE OF EXCESSIVE RUST, GREASE, OIL OR OTHER MATERIAL LIKELY TO IMPAIR BOND.
7. SPACING OF BARS SHALL BE CONSIDERED AS MAXIMUM SPACING.

REINFORCED CONCRETE

1. CONCRETE SHALL DEVELOP A MINIMUM ULTIMATE COMPRESSIVE STRENGTH PER MATERIAL PROPERTIES.
2. CONCRETE WORK SHALL CONFORM TO THE REQUIREMENTS OF THE LATEST EDITIONS OF THE CBC AND ACI STANDARD 318, UNLESS SHOWN OR NOTED OTHERWISE ON THESE DRAWINGS.
3. FORMS FOR CONCRETE SHALL BE LAID OUT AND CONSTRUCTED TO PROVIDE FOR ANY REQUIRED CAMBERS.
4. CLEAR DISTANCE BETWEEN PARALLEL REINFORCEMENT SHALL NOT BE LESS THAN 2 TIMES THE NOMINAL DIAMETER OF THE REINFORCEMENT, OR 1-1/3 TIMES MAXIMUM SIZE AGGREGATE, NOR LESS THAN 1-1/2".
5. REINFORCING STEEL IN NON-PRESTRESSED CAST-IN-PLACE CONCRETE SHALL HAVE A MINIMUM COVER AS FOLLOWS, UNLESS NOTED OTHERWISE:
   - CONCRETE AGAINST EARTH (UNFORMED): 3 IN.
   - CONCRETE AGAINST EARTH (FORMED) AND EXPOSED TO WEATHER:
     BARS #6 AND LARGER: 2 IN.
     BARS #5 AND SMALLER: 1 ½ IN.
   - CONCRETE NOT EXPOSED TO WEATHER OR IN CONTACT WITH EARTH:
     SLABS AND WALLS (#11 BARS AND SMALLER): —IN.
     BEAMS (TIES, STIRRUPS AND SPIRALS): 1 ½ IN.
     UNPROTECTED COLUMNS: 2 ½ IN.
6. PROVIDE SLEEVES FOR ANY PIPING PASSING THROUGH STRUCTURAL CONCRETE BEFORE PLACING CONCRETE. CORING IN CONCRETE IS NOT PERMITTED EXCEPT AS SHOWN – SEE TYPICAL DETAILS. NOTIFY STRUCTURAL ENGINEER IN ADVANCE OF CONDITIONS NOT SHOWN ON THE DRAWINGS.
7. ALL REINFORCING STEEL, WIRE MESH, ANCHOR BOLTS, HOLD DOWN ANCHORS AND OTHER INSERTS OR EMBEDED ITEMS SHALL BE PLACED ACCURATELY AND SECURED BEFORE BEGINNING CONCRETE PLACEMENT. STABBING OF ANCHOR BOLTS OR REINFORCING INTO WET CONCRETE IS NOT ALLOWED.
8. PROVIDE 6% ENTRAINED AIR BY VOLUME WITH ADMIXTURE PER ASTM C260 FOR SITES ABOVE 1500 FEET IN ELEVATION.
9. CONCRETE SHALL BE CONSOLIDATED BY MECHANICAL VIBRATORS.
10. CONCRETE SHALL BE PLACED IN ACCORDANCE WITH ASTM C94 AND ACI STANDARD 304.
11. LOCATION OF CONSTRUCTION JOINTS NOT SPECIFIED IN THESE DRAWINGS MUST BE REVIEWED BY THE STRUCTURAL ENGINEER.
12. CURE EXPOSED CONCRETE SURFACES WITH LIQUID MEMBRANE-FORMING CURING COMPOUND CONFORMING TO ASTM C309, TYPE 1, CLASS A OR OTHER APPROVED CURING METHOD IMMEDIATELY AFTER PLACING CONCRETE. WHERE PLACEMENT OCCURS IN TEMPERATURES OVER 90°F OR IN WINDY CONDITIONS, CONTRACTOR SHALL TAKE ADDITIONAL MEASURES TO INSURE PROPER CONCRETE CURING. IF CONTROL JOINT SAW-CUTTING TAKES PLACE AFTER APPLICATION OF CURING COMPOUND, RE-APPLY CURING COMPOUND TO SAWCUTS.
13. WHEN COLD WEATHER CONDITIONS EXIST, PLACE CONCRETE IN COMPLIANCE WITH CBC.
14. WHEN HOT WEATHER CONDITIONS EXIST, PLACE CONCRETE IN COMPLIANCE WITH THE CBC. REINFORCING SHALL BE KEPT COOL DURING PLACEMENT OF CONCRETE.
15. CONCRETE SLAB ON GRADE SHALL HAVE CONTROL JOINTS AS SHOWN ON THE FOUNDATION PLAN AS SOON AS EQUIPMENT CAN BE OPERATED WITHOUT DAMAGING THE SLAB.
16. WHEN CONCRETE IS PLACED AGAINST EXISTING CONCRETE WALL PANELS AND FOOTINGS SURFACES, EXISTING CONCRETE SURFACES SHALL BE THOROUGHLY CLEANED AND ROUGHENED TO AN AMPLITUDE OF 1/4" MINIMUM. A CONCRETE BONDING AGENT SHALL BE APPLIED TO THE EXISTING CONCRETE SURFACE.

STATEMENT OF SPECIAL AND OTHER INSPECTIONS

THIS STATEMENT OF SPECIAL AND OTHER INSPECTIONS IS SUBMITTED IN FULFILLMENT OF THE REQUIREMENTS OF CBC SECTIONS 1704 AND 1705. THIS STATEMENT SUPERCEDES ALL OTHER REFERENCES IN THE PLANS AND SPECIFICATIONS CONCERNING SUBMITTAL AND RETAINAGE OF SPECIAL INSPECTORS. INCLUDED ARE:
- SCHEDULE OF SPECIAL INSPECTIONS AND TESTS APPLICABLE TO THIS PROJECT:
  SPECIAL INSPECTIONS PER SECTIONS 1704 AND 1705
  SPECIAL INSPECTIONS FOR SEISMIC RESISTANCE
  SPECIAL INSPECTIONS FOR WIND RESISTANCE
- LIST OF THE TESTING AGENCIES AND OTHER SPECIAL INSPECTORS THAT WILL BE RETAINED TO CONDUCT THE TESTS AND INSPECTIONS.

SPECIAL AND OTHER INSPECTIONS AND TESTING WILL BE PERFORMED IN ACCORDANCE WITH THE APPROVED PLANS AND SPECIFICATIONS, THIS STATEMENT AND CBC SECTIONS 1704, 1705, 1707, AND 1708.

THE SCHEDULE OF SPECIAL INSPECTIONS SUMMARIZES THE SPECIAL INSPECTIONS AND TESTS REQUIRED. SPECIAL INSPECTORS WILL REFER TO THE APPROVED PLANS AND SPECIFICATIONS FOR DETAILED SPECIAL INSPECTION REQUIREMENTS. ANY ADDITIONAL TESTS AND INSPECTIONS REQUIRED BY THE APPROVED PLANS AND SPECIFICATIONS WILL ALSO BE PERFORMED.

INTERIM REPORTS WILL BE SUBMITTED TO THE BUILDING OFFICIAL AND THE REGISTERED DESIGN PROFESSIONAL IN RESPONSIBLE CHARGE (ENGINEER OF RECORD) IN ACCORDANCE WITH CBC SECTION 1704.1.2

A FINAL REPORT OF SPECIAL INSPECTIONS DOCUMENTING REQUIRED SPECIAL INSPECTIONS, TESTING AND CORRECTION OF ANY DISCREPANCIES NOTED IN THE INSPECTIONS SHALL BE SUBMITTED PRIOR TO ISSUANCE OF A CERTIFICATE OF USE AND OCCUPANCY (SECTION 1704.1.2). ALL SPECIAL INSPECTION FINAL REPORTS SHALL BE SUBMITTED TO THE REGISTERED DESIGN PROFESSIONAL IN RESPONSIBLE CHARGE (ENGINEER OF RECORD) FOR COMPILATION AND SUBMITTAL TO THE BUILDING OFFICIAL. THE FINAL REPORTS WILL DOCUMENT:
- REQUIRED SPECIAL INSPECTIONS.
- CORRECTION OF DISCREPANCIES NOTED IN INSPECTIONS.

THE OWNER RECOGNIZES HIS OR HER OBLIGATION TO ENSURE THAT THE CONSTRUCTION COMPLIES WITH THE APPROVED PERMIT DOCUMENTS AND TO IMPLEMENT THIS PROGRAM OF SPECIAL INSPECTIONS. IN PARTIAL FULFILLMENT OF THESE OBLIGATIONS, THE OWNER WILL RETAIN AND DIRECTLY PAY FOR THE SPECIAL INSPECTIONS AS REQUIRED IN CBC SECTION 1704.1.

THIS PLAN HAS BEEN DEVELOPED WITH THE UNDERSTANDING THAT THE BUILDING OFFICIAL WILL:
- REVIEW AND APPROVE THE QUALIFICATIONS OF THE SPECIAL INSPECTORS WHO WILL PERFORM THE INSPECTIONS.
- MONITOR SPECIAL INSPECTION ACTIVITIES ON THE JOB SITE TO ASSURE THAT THE SPECIAL INSPECTORS ARE QUALIFIED AND ARE PERFORMING THEIR DUTIES AS CALLED FOR IN THIS STATEMENT OF SPECIAL INSPECTION.
- REVIEW SUBMITTED INSPECTION REPORTS.
- PERFORM INSPECTIONS AS REQUIRED BY THE LOCAL BUILDING CODE.

Verification and Inspection	Continuous	Periodic	Notes
Table 1704.3 - Steel			
4. Material verification of weld filler materials:			
a. Identification markings to conform to AWS designation listed in the WPS.	---	---	
b. Manufacturer's certificate of compliance required.	---	---	
5. Inspection of welding:			
a. Structural steel			
1) Complete and partial penetration groove welds.	X		
2) Multipass fillet welds.	X		
3) Single-pass fillet welds > 5/16".	X		
4) Single-pass fillet welds ≤ 5/16".		X	
5) Floor and roof deck welds.		X	
b. Reinforcing steel			
1) Verification of weldability of reinforcing steel other than ASTM A706.		X	
2) Reinforcing steel-resisting flexural and axial forces in intermediate and special moment frames, and boundary elements of special reinforced concrete shear walls, and shear reinforcement.	X		
3) Shear reinforcement.	X		
4) Other reinforcing steel		X	
Table 1704.4 - Concrete			
1. Inspection of reinforcing steel, including prestressing tendons and placement.		X	
2. Inspection of reinforcing steel welding in accordance with Table 1704.3 Item 5b.	---	---	
3. Inspect bolts to be installed in concrete prior to and during placement of concrete where allowable loads have been increased.	X		
5. Verifying use of required design mix.		X	Each design mix shall be submitted to the engineer of record for acceptance prior production or delicery to the site.
6. At time fresh concrete is sampled to fabricate specimens for strength tests, perform slump and air content tests and determine the temperature of the concrete.	X		All concrete delivered to the site will be sampled at a rate of 1 sample per 24 cubic yards or 1 sample per day for smaller pours.
7. Inspection of concrete and shotcrete placement for proper application techniques.	X		
11. Inspect formwork for shape, location, and dimensions of the concrete member being formed.		X	Inspection by the engineer of record is also required.
Table 1704.7 - Inspection of Soils			Refer to soils report for additional information
1. Verify materials below footings are adequate to achieve the desired bearing capacity.		X	
2. Verify excavations are extended to proper depth and have reached proper material.		X	
3. Perform classification and testing of controlled fill materials.		X	
4. Verify use of proper materials, densities and lift thicknesses during placement and compaction of controlled fill.	X		
5. Prior to placement of controlled fill, observe subgrade and verify that site has been prepared properly.		X	
Table 1704.9 - Pier Foundations			

ABBREVIATIONS

#	NUMBER OR POUND
~	APPROXIMATELY
∠	ANGLE
@	AT
AB	ANCHOR BOLT
ABV.	ABOVE
ADDL.	ADDITIONAL
ADJ.	ADJACENT
AITC.	AMERICAN INSTITUTE OF TIMBER CONSTRUCTION
AFF	ABOVE FINISH FLOOR
ALT.	ALTERNATE
APA	AMERICAN PLYWOOD ASSOCIATION
APPROX.	APPROXIMATE
ARCH.	ARCHITECTURAL, ARCHITECT
ASTM	AMERICAN STANDARDS OF TESTING AND MATERIALS
BLDG.	BUILDING
BLK.	BLOCK, BLOCKING
BLW.	BELOW
BM.	BEAM
BN	BOUNDARY NAILING
BO	BOTTOM OF
BOT.	BOTTOM
BRG.	BEARING
BS	BOTH SIDES
BTWN.	BETWEEN
CANT.	CANTILEVER
CB	CARRIAGE BOLT
CHD.	CHORD
CJ	CONSTRUCTION OR CONTROL JOINT
CTR.	CENTER
℄ or CL	CENTER LINE
CLG.	CEILING
CLR.	CLEAR
CMU	CONCRETE MASONRY UNIT
COL.	COLUMN
COMP.	COMPOSITE, COMPOSITION
CONC.	CONCRETE
CONN.	CONNECTION
CONST.	CONSTRUCTION
CONT.	CONTINUOUS
COORD.	COORDINATE
CP	COMPLETE PENETRATION
CSK.	COUNTERSINK
D or d	NAIL PENNY SIZE
Ø or DIA.	DIAMETER
DBL.	DOUBLE
DET.	DETAIL
DF	DOUGLAS FIR
DFL	DOUGLAS FIR-LARCH
DIAG.	DIAGONAL
DIM.	DIMENSION
DKG.	DECKING
DL	DEAD LOAD
DWG.	DRAWING
(E)	EXISTING
EA.	EACH
EF	EACH FACE
EJ	EXPANSION JOINT
ELEV.	ELEVATION
EMBED.	EMBEDMENT
EN	EDGE NAIL, END NAIL
EQ.	EQUAL
EQUIP.	EQUIPMENT
ES	EACH SIDE
EW	EACH WAY
EXP.	EXPANSION
EXT.	EXTERIOR
FAB.	FABRICATED
FDN.	FOUNDATION
FF	FINISH FLOOR
FG	FINISH GRADE
FIN.	FINISH
FJ	FLOOR JOIST
FLR.	FLOOR
FN	FIELD NAIL
FOC	FACE OF CONRETE
FOM	FACE OF MASONRY
FOS	FACE OF STUD
FRMG.	FRAMING
FS	FAR SIDE
FT.	FOOT, FEET
FTG.	FOOTING
GA.	GAUGE
GALV.	GALVANIZED
GB	GALVANIZED BOX
GLB	GLUED-LAMINATED BEAM
GYP. BD.	GYSPUM BOARD
(H)	HORIZONTAL
HD	HOLDOWN
HDG	HOT DIPPED GLAVANIZED
HDR.	HEADER
HK.	HOOK
HGR.	HANGER
HOR.	HORIZONTAL
HS	HIGH STRENGTH
HSS	HOLLOW STRUCTURAL SECTION
HT.	HEIGHT
ICC	INTERNATIONAL CODE COUNCIL
ID	INSIDE DIAMETER
INFO.	INFORMATION
INSTALL.	INSTALLATION
INT.	INTERIOR
INTRM.	INTERMEDIATE
INTX.	INTERSECTION
JST.	JOIST
JT.	JOINT
LL	LIVE LOAD
LLH	LONG LEG HORIZONTAL
LLV	LONG LEG VERTICAL
LONG.	LONGITUDINAL
LOC.	LOCATION
LS	LAG SCREW
LTWT	LIGHT WEIGHT
MAX.	MAXIMUM
MB	MACHINE BOLT
MECH.	MECHANICAL
MFR.	MANUFACTURER
MIN.	MINIMUM
MISC.	MISCELLANEOUS
(N)	NEW
NIC	NOT IN CONTRACT
NLG.	NAILING
NS	NEAR SIDE
NTS	NOT TO SCALE
oc	ON CENTER
OD	OUTSIDE DIAMETER
OH	OPPOSITE HAND
OPNG.	OPENING
ORIG.	ORIGINAL
O/	OVER
PERP.	PERPENDICULAR
⅊ OR PL.	PLATE
PLF	POUNDS PER LINEAR FOOT
PP	PARTIAL PENETRATION
PREFAB.	PREFABRICATED
PROJ.	PROJECT, PROJECTS, PROJECTION
PSF	POUNDS PER SQUARE FOOT
PSI	POUNDS PER SQUARE INCH
PT	PRESSURE TREATED
PT.	POINT
PTDF	PRESSURE TREATED DOUGLAS FIR
PW.	PLYWOOD
QTY.	QUANTITY
R.	RADIUS
REINF.	REINFORCING
REQ.	REQUIRED
RET.	RETAINING
SCHD.	SCHEDULE
SECT.	SECTION
SGL.	SINGLE
SHT.	SHEET
SHTG.	SHEATHING
SIM.	SIMILAR
SMS	SHEET METAL SCREW
SOG	SLAB ON GRADE
SPEC.	SPECIFICATION
SQ.	SQUARE
SS	STAINLESS STEEL
STD.	STANDARD
STGD.	STAGGERED
STIFF.	STIFFENER
STL.	STEEL
STRUCT.	STRUCTURAL
STRGR.	STRINGER
SW	SHEAR WALL
SYM.	SYMMETRICAL
T&B	TOP AND BOTTOM
T&G	TONGUE AND GROOVE
TEMP.	TEMPORARY
TF	TOP FLANGE
THK.	THICK
THRU.	THROUGH
TN	TOE NAIL
TO	TOP OF
TOB	TOP OF BEAM
TOC	TOP OF CONCRETE
TOS	TOP OF STEEL
TOW	TOP OF WALL
TRANSV.	TRANSVERSE
TYP.	TYPICAL
UNO	UNLESS NOTED OTHERWISE
URM	UNREINFORCED MASONRY
(V)	VERTICAL
VERT.	VERTICAL
WWF	WELDED WIRE FABRIC
w/	WITH
w/o	WITHOUT
WD.	WOOD
WP	WORK POINT
WSHR.	WASHER

W:\proj\2011\110907\3 Project Design\Structural\Construction Drawings\SE110907TS-S0120.dwg 1-13-12 01:04:38 PM zoltann

REVISIONS:

NO.	DATE / DESCRIPTION
A	90% FOR REVIEW

STAMP:

REGISTERED PROFESSIONAL ENGINEER
MARSHALL R. PIHL
No. S5101
Exp. 06/30/13
STRUCTURAL
STATE OF CALIFORNIA

Cannon
1050 Southwood Drive
San Luis Obispo, CA 93401
P 805.544.7407 F 805.544.3863

THESE DRAWINGS ARE INSTRUMENTS OF SERVICE AND ARE THE PROPERTY OF CANNON. ALL DESIGNS AND INFORMATION ON THESE DRAWINGS ARE FOR USE OF THE SPECIFIED PROJECT AND SHALL NOT BE USED OTHERWISE OR REPRODUCED WITHOUT THE EXPRESSED WRITTEN PERMISSION OF CANNON.

PROJECT:
CROCKETT COGENERATION PLANT
COMPRESSOR BLDG FOUNDATION
550 LORING AVENUE, CROCKETT CA
CONTRA COSTA COUNTY

SHEET TITLE:
GENERAL NOTES

PRINT DATE:	12/6/11
SUBMIT DATE:	1/13/2012
DRWN BY:	ZN
CHKD BY:	RAL
SCALE:	AS SHOWN
JOB NO:	110907

SHEET NO:
S1.20

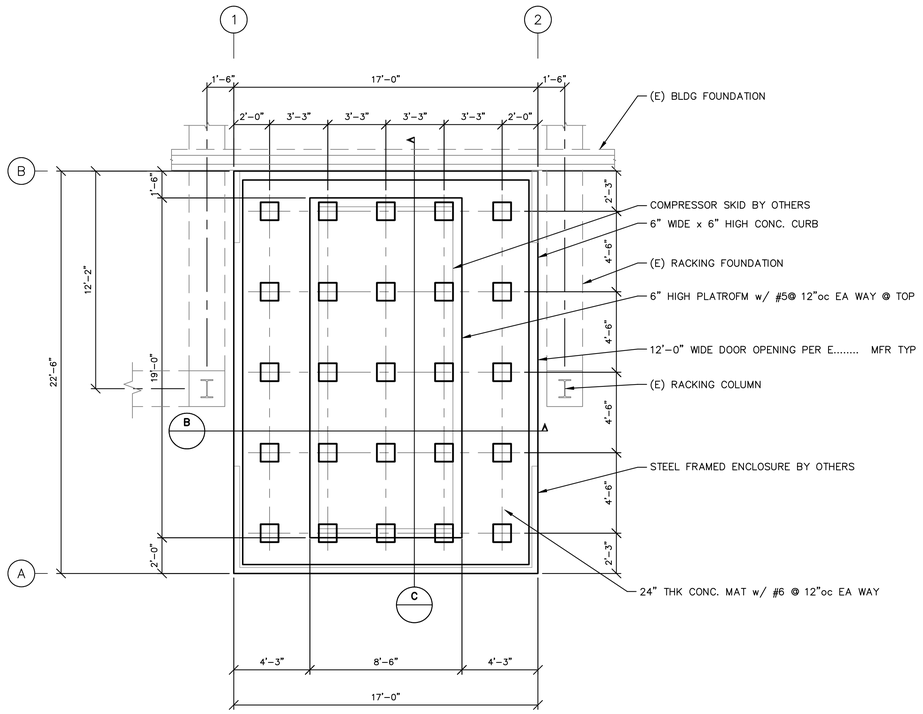

FOUNDATION PLOT (OPTION 1) (A)

SCALE: 1/4" = 1'-0" SE100907TS-S0210.dwg

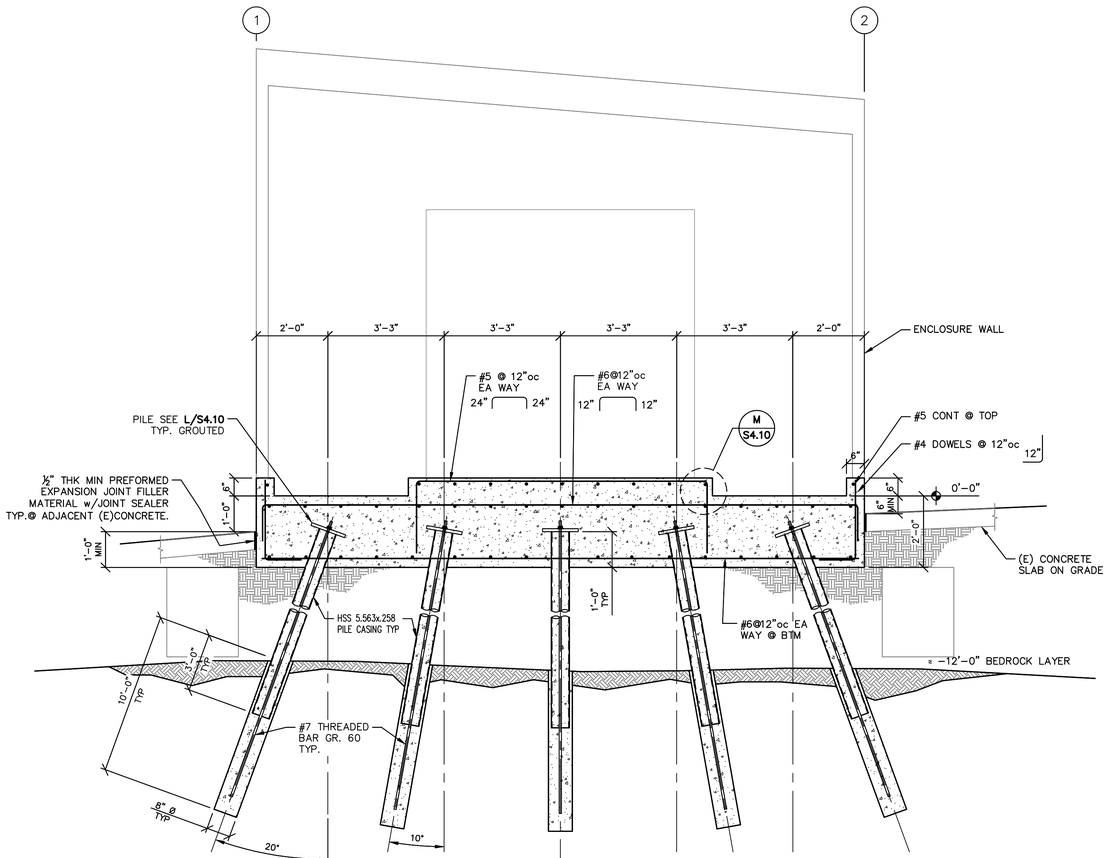

FOUNDATION SECTION (B)

SCALE: 1/2" = 1'-0" SE100907TS-S0210.dwg

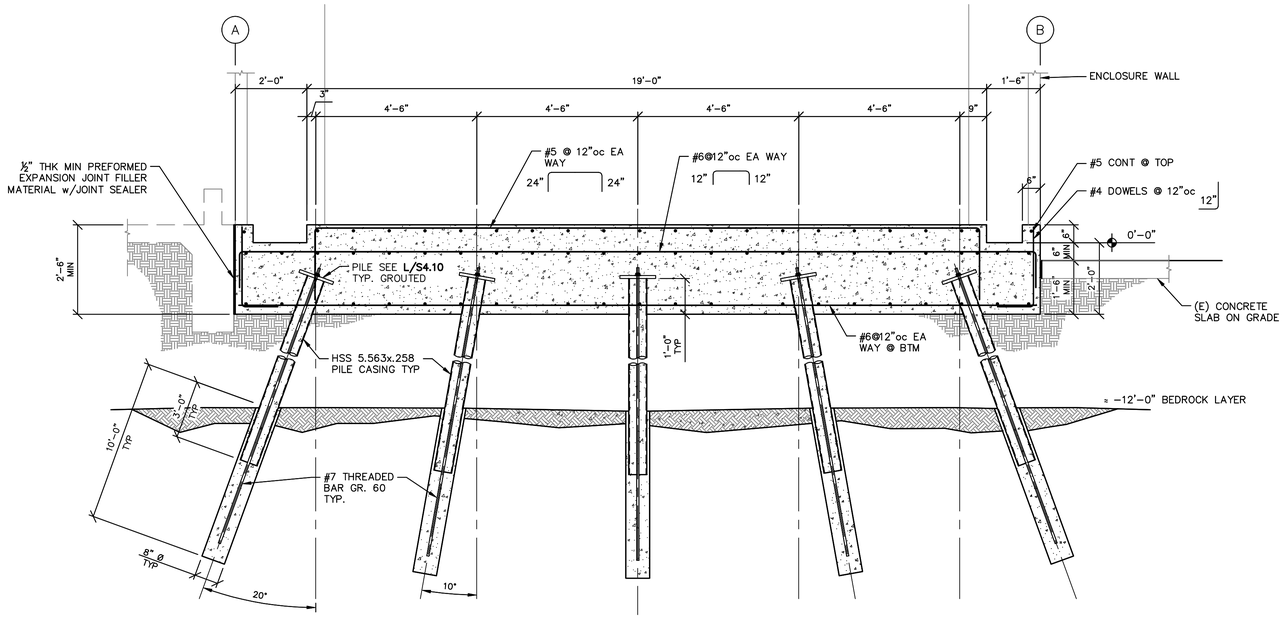

FOUNDATION SECTION (C)

SCALE: 1/2" = 1'-0" SE100907TS-S0210.dwg

REVISIONS:

NO.	DATE / DESCRIPTION
A	90% FOR REVIEW

STAMP:

REGISTERED PROFESSIONAL ENGINEER MARSHALL R. PIHL No. S5101 Exp. 06/30/13 STRUCTURAL STATE OF CALIFORNIA

Cannon

1050 Southwood Drive San Luis Obispo, CA 93401 P 805.544.7407 F 805.544.3863

THESE DRAWINGS ARE INSTRUMENTS OF SERVICE AND ARE THE PROPERTY OF CANNON. ALL DESIGNS AND INFORMATION ON THESE DRAWINGS ARE FOR USE OF THE SPECIFIED PROJECT AND SHALL NOT BE USED OTHERWISE OR REPRODUCED WITHOUT THE EXPRESSED WRITTEN PERMISSION OF CANNON.

PROJECT:

CROCKETT COGENERATION PLANT
COMPRESSOR BLDG FOUNDATION

550 LORING AVENUE, CROCKETT CA
CONTRA COSTA COUNTY

SHEET TITLE:

FOUNDATION PLAN
OPTION 1

PRINT DATE:	12/6/11
SUBMIT DATE:	1/13/2012
DRWN BY:	ZN
CHKD BY:	RAL
SCALE:	AS SHOWN
JOB NO:	110907
SHEET NO:	

S2.10

W:\proj\2011\110907\3 Project Design\Structural\Construction Drawings\SE100907TS-S0210.dwg 1-13-12 01:04:52 PM zoltann

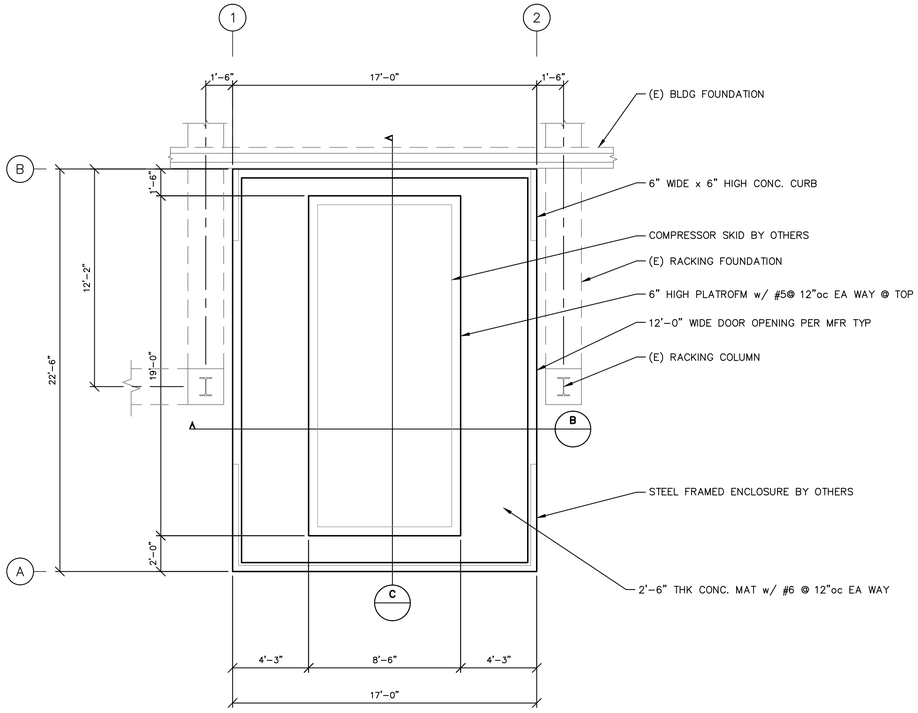

FOUNDATION PLAN (OPTION 2) (A)

SCALE: 1/4" = 1'-0" SE100907TS-S0215.dwg

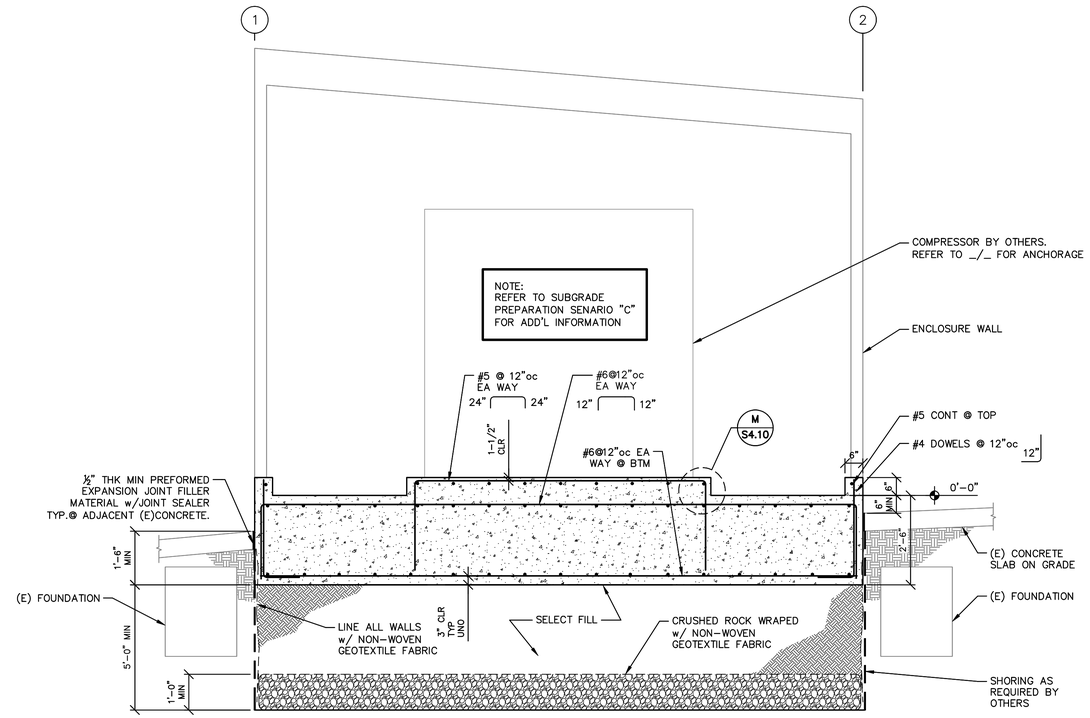

FOUNDATION SECTION (B)

SCALE: 1/2" = 1'-0" SE100907TS-S0215.dwg

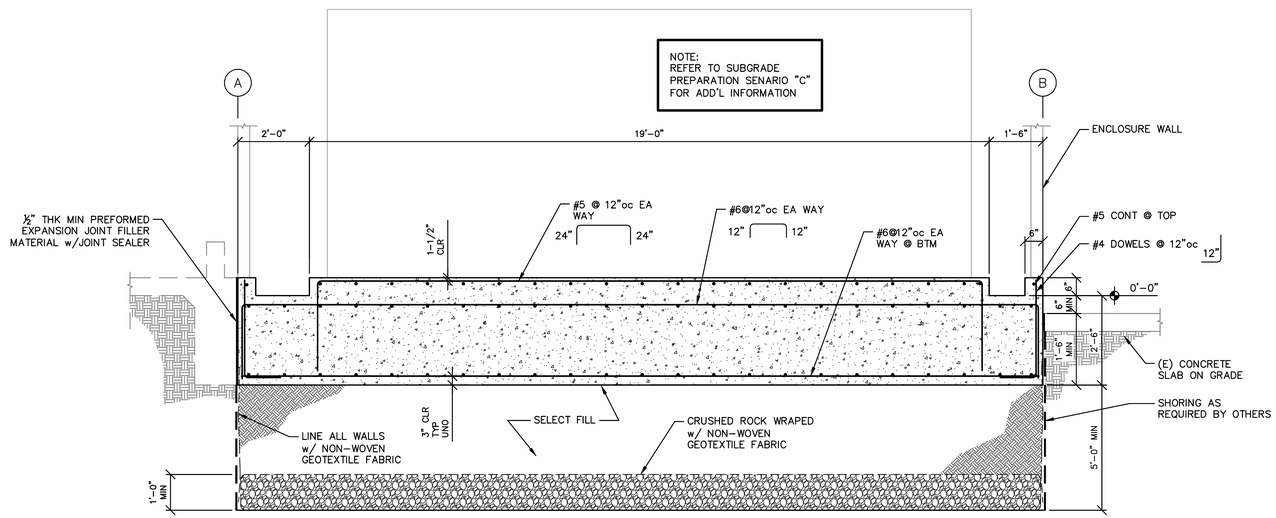

FOUNDATION SECTION (C)

SCALE: 1/2" = 1'-0" SE100907TS-S0215.dwg

REVISIONS:

NO.	DATE / DESCRIPTION
A	90% FOR REVIEW

STAMP:

REGISTERED PROFESSIONAL ENGINEER
MARSHALL R. PIHL
No. S5101
Exp. 06/30/13
STRUCTURAL
STATE OF CALIFORNIA

Cannon
1050 Southwood Drive
San Luis Obispo, CA 93401
P 805.544.7407 F 805.544.3863

THESE DRAWINGS ARE INSTRUMENTS OF SERVICE AND ARE THE PROPERTY OF CANNON. ALL DESIGN AND INFORMATION ON THESE DRAWINGS ARE FOR USE OF THE SPECIFIED PROJECT AND SHALL NOT BE USED OTHERWISE OR REPRODUCED WITHOUT THE EXPRESSED WRITTEN PERMISSION OF CANNON.

PROJECT:

CROCKETT COGENERATION PLANT COMPRESSOR BLDG FOUNDATION

550 LORING AVENUE, CROCKETT CA
CONTRA COSTA COUNTY

SHEET TITLE:

FOUNDATION PLAN
OPTION 2

PRINT DATE:	12/6/11
SUBMIT DATE:	1/13/2012
DRWN BY:	ZN
CHKD BY:	RAL
SCALE:	AS SHOWN
JOB NO:	110907

SHEET NO:

S2.15

W:\proj\2011\110907\3 Project Design\Structural\Construction Drawings\SE100907TS-S0215.dwg 1-13-12 01:05:07 PM zoltann

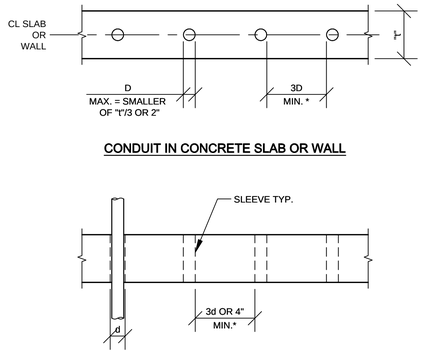

CONDUIT IN CONCRETE SLAB OR WALL

* WHERE CLEAR DISTANCE BETWEEN SLEEVE IS UNATAINABLE, REINFORCE AREA PER TYPICAL STRUCTURAL CONCRETE SLAB OPENING.

PIPING THROUGH CONCRETE SLAB OR WALL

CONDUIT & PIPING THRU CONCRETE (A)

SCALE: 1" = 1'-0"

REINFORCEMENT LAP SPLICE & EMBEDMENT LENGTH

for fc = 3,000 PSI or GREATER[5], Fy = 60,000 PSI

BAR SIZE	BAR SPACING	MIN. LAP LENGTH (IN.)[4]		MIN. EMBED. LENGTH (IN.)[4]		
				STRAIGHT BARS		w/ STD. HOOK
		TOP BARS	OTHER BARS	TOP BARS	OTHER BARS	
REQUIREMENTS FOR SLABS AND WALLS						
#3	6" TO 12"	21	16	16	12	6
#4		28	22	22	16	8
#5		35	27	27	21	10
#6		42	32	32	25	12
#7		50	38	38	29	14
#8		66	51	51	39	16
#9	6"	104	80	80	62	18
	7" TO 12"	83	64	64	49	
#10	6"	132	102	102	78	20
	7" TO 12"	106	81	81	63	
#11	6"	162	125	125	96	22
	7" TO 12"	130	100	100	77	
REQUIREMENTS FOR BEAMS, COLUMNS, AND FOUNDATIONS						
#3	-	SAME AS SLABS AND WALLS				8
#4	-					11
#5	-					14
#6	-					16
#7	-					19
#8	-	59	45	45	35	22
#9	-	74	57	57	44	25
#10	-	94	73	73	56	28
#11	-	116	89	89	69	31

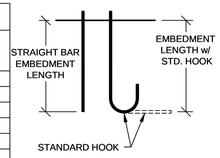

NOTES

1. MIN. LAP ALL BARS CLASS 'B' UNLESS NOTED OTHERWISE
2. STAGGER LAP OF HORIZONTAL WALL BARS
3. TOP BARS ARE HORIZONTAL BARS w/ MORE THAN 12" DEPTH OF CONCRETE CAST BELOW THE REINFORCEMENT. MULTIPLE HORIZONTAL BARS IN A SINGLE VERTICAL PLAN SUCH AS COLUMN TIES OR HORIZONTAL BARS IN WALLS ARE NOT TOP BARS
4. FOR BAR CLEAR SPACING LESS THAN 3 BAR DIAMETER, ADD 40%. FOR BAR CLEAR SPACING LESS THAN 2 BAR DIAMETER, ADD 100%
5. SEE GENERAL STRUCTURAL NOTES, MATERIAL PROPERTIES FOR CONCRETE STRENGTH

REBAR SPLICE & EMBEDMENT (B)

SCALE: 3/4" = 1'-0"

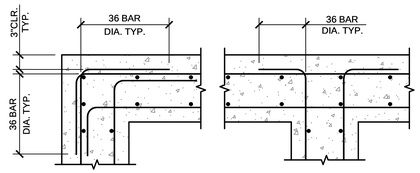

MULTIPLE LINES OF REINFORCING

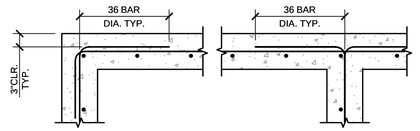

SINGLE LINE OF REINFORCING

TYP. CONCRETE REINFORCING (C)

SCALE: 3/4" = 1'-0"

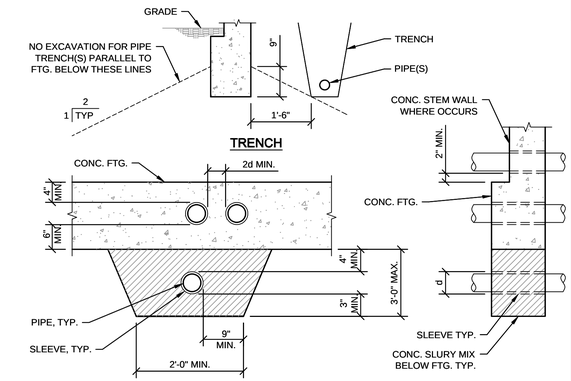

PIPE PERPENDICULAR TO FOOTING

NOTES

1. PIPE TO CLR. SLEEVE BY 1" ALL AROUND-CAULK AS REQD.
2. WHERE PIPE IS MORE THAN 2'-6" BLW. BOT. OF FTG. NOTIFY ENGINEER BEFORE PROCEEDING w/ CONSTRUCTION.
3. WHERE PIPES OCCUR LESS THAN 6" FROM BOTTOM OF FOOTING STEP FTG. PER TYP. STEP DETAIL SO PIPES PASS THRU DEEPENED FOOTING AS SHOWN

TYP. PIPE AND TRENCH (D)

SCALE: 3/4" = 1'-0"

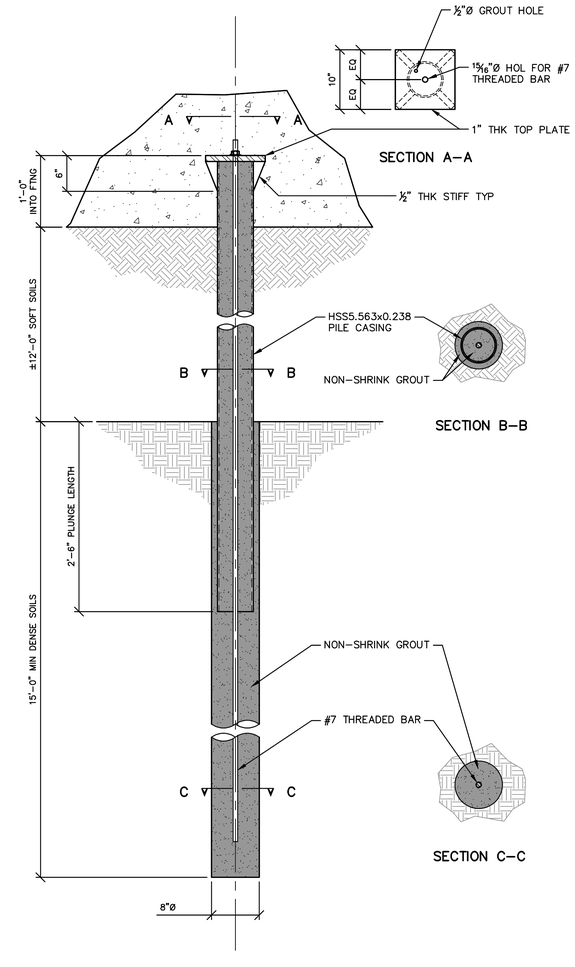

MICRO PILE DETAIL (L)

SCALE: 3/4" = 1'-0"

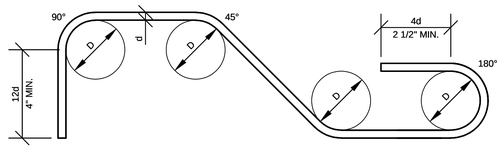

TYPICAL HOOKS & BENDS

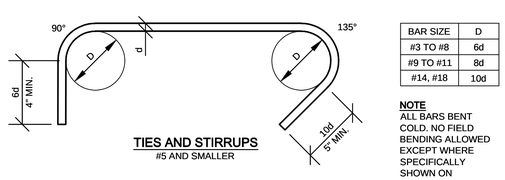

BAR SIZE	D
#3 TO #8	6d
#9 TO #11	8d
#14, #18	10d

TIES AND STIRRUPS

#5 AND SMALLER

NOTE
ALL BARS BENT COLD. NO FIELD BENDING ALLOWED EXCEPT WHERE SPECIFICALLY SHOWN ON DRAWINGS.

REINF. BAR BENDS (H)

SCALE: 3/4" = 1'-0"

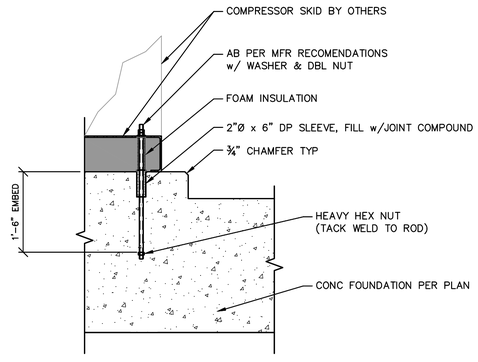

COMPRESSOR SKID ANCHORAGE (M)

SCALE: 3/4" = 1'-0"

REVISIONS:

NO.	DATE / DESCRIPTION
A	90% FOR REVIEW

STAMP:

REGISTERED PROFESSIONAL ENGINEER
MARSHALL R. PYRL
No. S5101
Exp. 06/30/13
STRUCTURAL
STATE OF CALIFORNIA

Cannon
1050 Southwood Drive
San Luis Obispo, CA 93401
P 805.544.3907 F 805.544.3863

THESE DRAWINGS AND SPECIFICATIONS ARE THE PROPERTY OF CANNON, AND SHOULD NOT BE USED IN WHOLE OR IN PART FOR ANY PROJECT OTHER THAN THE ONE FOR WHICH THEY WERE PREPARED AND ARE NOT TO BE REPRODUCED WITHOUT THE EXPRESSED WRITTEN PERMISSION OF CANNON.

PROJECT:
CROCKETT COGENERATION PLANT
COMPRESSOR BLDG FOUNDATION
550 LORING AVENUE, CROCKETT CA
CONTRA COSTA COUNTY

SHEET TITLE:
STRUCTURAL DETAILS

PRINT DATE:	12/6/11
SUBMIT DATE:	1/13/2012
DRWN BY:	ZN
CHKD BY:	RAL
SCALE:	AS SHOWN
JOB NO:	110907

SHEET NO:

S4.10

W:\proj\2011\110907\3 Project Design\Structural\Construction Drawings\SE100907TS-S0410.dwg 1-13-12 01:05:23 PM zoltann