NONRESIDENTIAL ALTERNATIVE CALCULATION METHOD (ACM) APPROVAL MANUAL

for the

2005 BUILDING ENERGY EFFICIENCY STANDARDS FOR RESIDENTIAL AND NONRESIDENTIAL BUILDINGS

CALIFORNIA ENERGY COMMISSION

STANDARDS/REGULATIONS

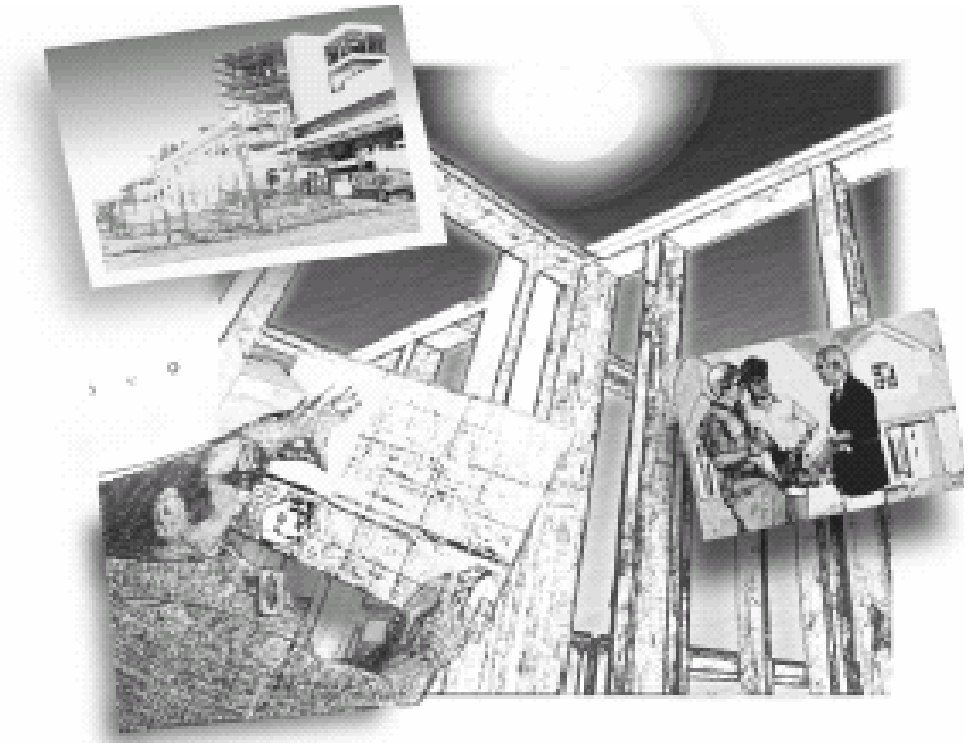

OCTOBER 2004
P400-03-004F-M

Effective October 1, 2005

This version of the Nonresidential ACM Methods Approval Manual is the **marked** final version indicating the changes from the 2001 Standards

Arnold Schwarzenegger, *Governor*

CALIFORNIA ENERGY COMMISSION

William J. Keese,
Chairman

Commissioners:
Arthur H. Rosenfeld
James D. Boyd
John L. Geesman
Jackalyne Pfannenstiel

Robert L. Therkelsen,
Executive Director

G. William Pennington,
Manager
BUILDINGS AND APPLIANCES OFFICE

Valerie T. Hall,
Deputy Director
ENERGY EFFICIENCY AND DEMAND ANALYSIS DIVISION

LEGEND

(EXPLANATION OF MARKINGS)

for the 2005 Building Energy Efficiency Standards and Associated Documents

This version of the 2005 Nonresidential Alternative Calculation Method (ACM) Approval Manual shows the changes from the 2001 Residential ACM Manual. The addition and deletion markings are as listed below. A version with no markings that includes all the changes is available online at www.energy.ca.gov/title24 or from the California Energy Commission's Publications Office at 916/654-5200.

1. Language added to the 2001 Standards during the initial 45-day review period appears in single underline.

2. Language deleted from the 2001 Standards during the initial 45-day review period appears in ~~single strikeout~~.

3. Language added during the second review period of 15 days appears in double underline.

4. Language deleted during the second review period of 15 days appears in ~~double strikeout~~.

Note that errata adopted after the 15-day review period may appear in both double underline and double strikeout.

Table of Contents

1. Overview of Process....1-1
1.1 Application Checklist....1-3
1.2 Types of Approval....1-4
1.2.1 Full Approval & Re-Approval of Alternative Calculations Methods (ACMs)....1-5
1.2.2 Approval of New Features & Updates....1-5
1.3 Challenges....1-6
1.4 Alternative ACM Tests....1-6
1.5 Decertification of Alternative Calculation Methods (ACMs)....1-6

2. Required ACM Capabilities....2-1
2.1 Compliance....2-1
2.1.1 Type of Project Submittal....2-1
2.1.2 New Building or Addition Alone....2-2
2.1.3 Scope of Compliance Calculations....2-2
2.1.4 Climate Zones....2-4
2.1.5 Reference Year....2-4
2.1.6 Time Dependent Valuation....2-5
2.1.7 Reference Method Comparison Tests....2-5
2.2 Compliance Documentation....2-6
2.2.1 Certificate of Compliance Form(s)....2-9
2.2.2 Supporting Compliance Forms....2-10
2.3 Building Shell....2-13
2.3.1 Spaces....2-13
2.3.2 Construction Assemblies....2-17
2.3.3 Above-Grade Opaque Envelope....2-27
2.3.4 Interior Surfaces....2-29
2.3.5 Fenestration and Doors....2-30
2.3.6 Below-Grade Envelope....2-40
2.4 Building Occupancy....2-41
2.4.1 Assignment....2-41
2.4.2 Lighting Power....2-51
2.4.3 Schedules....2-55
2.5 HVAC Systems and Plants....2-64
2.5.1 Thermal Zoning....2-65
2.5.2 Heating & Cooling Equipment....2-65
2.5.3 Air Distribution Systems....2-91
2.6 Service Water Heating....2-127
2.6.1 Nonresidential Service Water Heating (Including Hotels Guest Rooms)....2-127
2.6.2 High-Rise Residential Water Heating Calculation Methods....2-131

3. Optional Capabilities....3-1
3.1 Alternations and Additions....3-1
3.1.1 Additions & Alterations....3-2
3.1.2 Alteration or Addition Plus Altered Existing....3-2
3.1.3 Duct Sealing in Additions and Alterations....3-2
3.1.4 Output Reports for Existing Buildings....3-3
3.2 Building Occupancy....3-10
3.2.1 Alternate Occupancy Selection Lists....3-10
3.2.2 Lighting Controls....3-15
3.2.3 Light Heat to Zone....3-16
3.3 HVAC Systems and Plants....3-16
3.3.1 Absorption Cooling Equipment....3-22
3.3.2 Gas-Engine Driven Chillers and Heat Pumps....3-25
3.3.3 Chiller Heat Recovery....3-26
3.3.4 Exhaust Heat Recovery....3-26

3.3.5 Optional System Types 3-27
3.3.6 Combined Hydronic Systems 3-29
3.3.7 Alternate Equipment Performance Data 3-29
3.3.8 Cooling Towers Types 3-30
3.3.9 Pump Controls 3-31
3.3.10 Air Foil Centrifugal Fan with Discharge Dampers 3-31
3.3.11 Separate Control for Supply, Return and Relief Fans 3-32
3.3.12 Air Economizers Control Strategies 3-33
3.3.13 Water Side Economizers 3-34
3.3.14 Zone Terminal Controls 3-35
3.3.15 Solar Thermal Energy 3-36
3.4 Vendor Defined Optional Capabilities 3-36

4. User's Manual and Help System Requirements 4-1
4.1 Overview 4-1
4.2 Modeling Guidelines and Input References 4-2
4.3 Required Modeling Capabilities 4-2
4.3.1 General Requirements 4-2
4.3.2 Occupancies and Spaces 4-4
4.3.3 Walls, Roofs and Floors 4-9
4.3.4 Fenestration 4-13
4.3.5 Lighting 4-16
4.3.6 HVAC Systems and Plant 4-17
4.3.7 Water Heating 4-26
4.4 Optional Modeling Capabilities 4-26
4.4.1 Additions and Alterations 4-26
4.4.2 Alternative Occupancy Selection 4-28
4.4.3 HVAC Systems and Plant 4-30
4.5 Vendor Defined Optional Capabilities 4-30
4.6 Compliance Forms 4-30

5. Reference Method Comparison Tests 5-1
5.1 Overview 5-1
5.1.1 Base Case Prototype Buildings 5-2
5.1.2 Climate Zones 5-5
5.1.3 Labeling Computer Runs 5-6
5.1.4 Test Criteria 5-6
5.2 General Requirements 5-7
5.2.1 Partial Compliance Tests - A1 Series (3 tests) 5-8
5.2.2 Exterior Opaque Envelope Tests 5-9
5.2.3 Envelope Glazing Tests 5-10
5.2.4 Occupancy Tests 5-12
5.2.5 Lighting Tests - D1 Series (4 tests) 5-14
5.2.6 Ventilation Tests - E1 Series (6 tests) 5-14
5.2.7 Process Loads Tests - E2 Series (6 tests) 5-15
5.2.8 HVAC System Tests - F1 Series (5 tests) 5-15
5.2.9 System Sizing Tests - G1 Series (6 tests) 5-16
5.2.10 HVAC Distribution Efficiency Tests 5-17
5.3 Optional Capabilities Tests 5-17
5.3.1 OC Test Series - Compliance Options 5-17
5.3.2 O1 Test Series - Fan Powered VAV Boxes 5-18
5.3.3 O2 Test Series - Supply/Return Fan Options 5-18
5.3.4 O3 Test Series - Special Economizer Options 5-19
5.3.5 O4 Test Series - Special HVAC Control Option 5-19
5.3.6 O6 Test Series - Additional Chiller Options 5-20
5.3.7 O7 Test Series - Additional HVAC System Options 5-20
5.3.8 O9 Test Series - Evaporative Cooling Options 5-20

6. Vendor Requirements 6-1
6.1 Availability to Commission 6-1
6.2 Building Department Support 6-1
6.3 User Support 6-1
6.4 ACM Vendor Demonstration 6-1

7. Duct Efficiency Improvements Including HERS Required Field Verification And Diagnostic Testing for Duct Sealing 7-1
7.1 Duct Efficiency Improvements 7-1
7.2 California Home Energy Rating Systems 7-3
7.3 Summary of Documentation and Communication 7-3
7.4 Installation Certification 7-4
7.5 Field Verification and Diagnostic Testing Procedures 7-5
7.5.1 Initial Field Verification and Testing 7-5
7.5.2 Sample Field Verification and Testing 7-5
7.5.3 Re-sampling, Full Testing and Corrective Action 7-6
7.6 Third Party Quality Control Programs 7-6
7.7 Sampling for Additions or Alterations 7-7
7.8 Summary of Responsibilities 7-7
7.8.1 Builder 7-8
7.8.2 HERS Provider and Rater 7-8
7.8.3 Third-Party Quality Control Program 7-8
7.8.4 Building Department 7-9

List of Tables

Table N2-1 – Standard Design Construction Assemblies From ACM Joint Appendix IV 2-19
Table N2-2 – Occupancy Assumptions When Lighting Plans are Submitted for the Entire Building or When Lighting Compliance is not Performed 2-47
Table N2-3 – Area Occupancy Assumptions When Lighting Plans are Submitted for Portions or for the Entire Building or When Lighting Compliance is not Performed 2-48
Table N2-4 – Schedule Types of Occupancies & Sub-Occupancies 2-56
Table N2-5 – Nonresidential Occupancy Schedules (Other than Retail) 2-57
Table N2-6 – Hotel Function Occupancy Schedules 2-60
Table N2-7 – Residential Occupancy Schedules (Including Hotel/Motel Guest Rooms) With Setback Thermostat For Heating 2-61
Table N2-8 – Residential Occupancy Schedules (Including Hotel/Motel Guest Rooms) Without Setback Thermostat 2-62
Table N2-9 – Retail Occupancy Schedules 2-63
Table N2-10 – Standard Design System Selection Flowchart 2-69
Table N2-11 – System #1 and System #2 Descriptions 2-69
Table N2-12 System #3 Description 2-70
Table N2-13 System #4 Description 2-71
Table N2-14 – System #5 Description 2-72
Table N2-15 – Default Coefficients for COOL-CAP-FT, COOL-EIR-FT, HEAT-CAP-FT and HEAT-EIR-FT Equations 2-74
Table N2-16 – Data Input Requirements for Equipment Performance Curves 2-76
Table N2-17 – Minimum Nominal Efficiency for Electric Motors (%) 2-91
Table N2-18 – Pipe Head Multipliers Based on Pipe Size and Flow at Connection to the Cooling Tower 2-115
Table N2-19 – Default Capacity Coefficients for Electric Air-Cooled Chillers 2-123
Table N 2-20 – Default Capacity Coefficients for Electric Water-Cooled Chillers 2-123
Table N2-21 – Default Efficiency EIR-FT Coefficients for Air-Cooled Chillers 2-123
Table N2-22 – Default Efficiency EIR-FT Coefficients for Water-Cooled Chillers 2-123
Table N2-23 – Default Efficiency EIR-FPLR Coefficients for Air-Cooled Chillers 2-123
Table N2-24 – Default Efficiency EIR-FPLR Coefficients for Water-Cooled Chillers 2-124

Table N5-1 – Climate Zones Tested 5-6
Table N5-2 – Occupancy Mixes for Tests.....5-8
Table N5-3 – A2 Test Series Summary 5-10
Table N5-4 – F1 Test Series Summary 5-16

List of Figures

Figure N5-1 – Prototype A 5-3
Figure N5-2 – Prototype B and C.....5-4
Figure N5-3 – Prototype D.....5-5

Appendices Table of Contents

Appendix NA - Nonresidential ACM Approval Application.....NA-1

Appendix NB - Illuminance Categories and Luminaire Power NB-1
Illuminance Categories NB-1
Illuminance Categories and Luminaire Power.....NB-1

Appendix NC - Fan Motor Efficiencies.....NC-1

Appendix ND - Compliance Procedures for Relocatable Public School Buildings ND-1
ND.1 Purpose and Scope ND-1
ND.2 The Plan Check Process.....ND-1
ND.3 The Compliance Process ND-1
ND.4 Documentation.....ND-2
ND.5 Optional Features ND-3

~~Appendix NE - Approved Forms~~ NE-1

Appendix NF - Technical Databases for Test Runs NF-1

Appendix NG - Standard Procedure for Determining the Energy Efficiencies of Single-Zone Nonresidential Air Distribution Systems in Buffer Spaces or Outdoors NG-1

NG.1 Purpose and Scope NG-1
NG.2 Definitions NG-1
NG.3 Nomenclature NG-3
NG.4 Air Distribution Diagnostic Measurement and Default Assumptions NG-6
NG.4.1 Instrumentation Specifications NG-6
NG.4.2 Apparatus NG-6
NG.4.3 Procedure NG-6
NG.4.4 Delivery Effectiveness (DE) Calculations NG-17
NG.4.5 Seasonal Distribution System Efficiency NG-19
NG.4.6 Hourly Distribution System Efficiency NG-20

Appendix NH - Test Nonresidential Air Distribution Systems NH-1

Appendix NI - Alternate Default Fenestration Thermal Properties NI-1
NI.1 Solar Heat Gain Coefficient NI-1
NI.1.2 Responsibilities for SHGC Compliance NI-2
NI.2 Thermal Transmittance (U-Factor) NI-4
NI.2.1 Responsibilities for U-factor Compliance..... NI-5

Appendix NJ - Acceptance Requirements for Nonresidential Buildings NJ-1
NJ.1 Purpose and Scope NJ-1
NJ.2 Introduction..... NJ-1
NJ.3 Outdoor Air NJ-2
NJ.3.1 Variable Air Volume Systems Outdoor Air Acceptance NJ-2
NJ.3.2 Constant Volume System Outdoor Air Acceptance..... NJ-2

NJ.4 Packaged HVAC Systems NJ-2
NJ.4.1 Constant Volume Packaged HVAC Systems Acceptance NJ-3
NJ.5. Air Distribution Systems NJ-4
NJ.5.1 Air Distribution Acceptance NJ-4
NJ.6. Lighting Control Systems NJ-5
NJ.6.1 Automatic Daylighting Controls Acceptance NJ-5
NJ.6.2 Occupancy Sensor Acceptance NJ-7
NJ.6.3 Manual Daylighting Controls Acceptance NJ-7
NJ.6.4 Automatic Time Switch Control Acceptance NJ-8
NJ.7. Air Economizer Controls NJ-8
NJ.7.1 Economizer Acceptance NJ-8
NJ.8. Demand Control Ventilation (DCV) Systems NJ-9
NJ.8.1 Packaged Systems DCV Acceptance NJ-9
NJ.9. Variable Frequency Drive Systems NJ-10
NJ.9.1 Supply Fan Variable Flow Controls NJ-10
NJ.10. Hydronic System Controls Acceptance NJ-10
NJ.10.1 Variable Flow Controls NJ-10
NJ.10.2 Automatic Isolation Controls NJ-11
NJ.10.3 Supply Water Temperature Reset Controls NJ-11
NJ.10.4 Water-loop Heat Pump Controls NJ-12
NJ.10.5 Variable Frequency Drive Controls NJ-13

1. Overview of Process

This Manual explains the requirements for approval of Alternative Calculation Methods (ACMs) used to demonstrate compliance with the Energy Efficiency Standards for nonresidential buildings, hotels & motels, and high-rise residential buildings. The approval process for nonresidential Alternative Calculation Methods (ACMs) is specified in Title 24, Part 1, Chapter 10, Sections 101-110 of the California Code of Regulations. Nonresidential Alternative Calculation Methods (ACMs) are used in the performance approach to demonstrate compliance with the Energy Efficiency Standards for nonresidential buildings as outlined in Title 24, Part 6~~2~~, Subc~~C~~hapter 5~~1~~, Section 141. The Energy Commission develops and implements the Energy Efficiency Standards.

The purpose and policy of this ACM Approval Manual is to specify the California Energy Commission approval process for nonresidential ACMs and to define the assumptions and procedures of the reference method against which ACMs will be evaluated. The performance compliance requirements and procedures apply to nonresidential buildings, hotels & motels, and high-rise residential buildings. A separate ACM Approval Manual addresses low-rise residential buildings. The procedures and processes described in this manual are designed to preserve the integrity of the performance compliance process.

The reference procedures and method described in this manual establish the basis of comparison for all ACMs. The approval process ensures that a minimum level of energy efficiency is achieved regardless of the Alternative Calculation Method (ACM) used. This is accomplished

- by having candidate ACMs pass a series of Reference Method comparison tests,
- by specifying input which may be varied in the compliance process for credit and which inputs are fixed or restricted,
- by defining standard reports output requirements, and
- by ACM vendor-certification to the requirements in this manual.

The reference calculation engine includes reference procedures described in this manual and the *reference computer program*, which is *version 110 of the DOE 2.1E* computer program.

~~The Commission approves alternative calculation methods which may be used for demonstrating compliance with the performance approach in the nonresidential standards. This Manual describes the methods and the process for approval of Alternative Calculation Methods (ACMs). It includes the required capabilities, optional capabilities, certification tests, compliance supplement specifications and vendor requirements for ongoing support of the ACM.~~

Optional capabilities are a special class of capabilities and user inputs that are not required of all ~~programs~~ ACMs but may be included ~~in some~~at the option of the vendor ~~programs~~. ~~Some~~ The optional capabilities included in this manual have minimal testing requirements. ~~Some~~ Additional optional capabilities ~~not included in this ACM manual~~ may be proposed by vendors. For both ~~these classes of optional capabilities~~cases, the Commission reserves the right to disapprove the certification application for a specific optional capability if there is not compelling evidence presented in the public process showing that the optional capability is sufficiently accurate and suitable to be used for compliance ~~for the building~~ with the Standards. In addition, energy efficiency measures modeled by ~~the~~ optional capabilities ~~y must~~shall ~~model energy efficiency measures whose user inputs and installation are~~ be capable of being ~~readily~~ verified by local enforcement agencies.

The Commission's purpose in approving additional optional capabilities is to accommodate new technologies which have only begun to penetrate the market and new modeling algorithms ~~for technologies that the Commission previously judged to be too difficult to model accurately~~. Optional capabilities which evaluate measures already in relatively common use ~~must~~shall have their standard design for the measure based on the common construction practice (or the typical base situation) for that measure since common practice is the inherent basis of the standards for all measures not explicitly regulated. For example, the Commission has no interest in an optional capability that evaluates the energy impacts of dirt on windows unless a new technology

produces substantial changes in this aspect of a building relative to buildings without this technology. The burden of proof that an optional capability should be approved lies with the applicant ~~for approval~~ and will be influenced by the ability of the reference computer program, DOE 2.1E to model the optional capability.

Companion documents which are helpful to prepare an ACM for certification include the latest editions of the following Commission publications:

- ~~*2001*~~ *Energy Efficiency Standards*
- *Appliance Efficiency Regulations*
- ~~*2001*~~ *Nonresidential Manual* ~~*Supplement*~~
- ~~*1998 Nonresidential Manual for Compliance with the Energy Efficiency Standards*~~
- ~~*DOE-2.1 California Compliance Supplement*~~
- ~~*2001*~~ *Residential Alternative Calculation Manual (ACM)* ~~*for the Residential Energy Efficiency Standards*~~*Manual*

In this manual the term "Standards" means the Building Energy Efficiency Standards, Title 24, Part 6~~, Chapter 1~~ of the California Code of Regulations. The term "compliance" means that a building design in an application for a building permit complies with the "Standards" and meets the requirements described for building designs therein.

- ~~*Compliance Options Approval Manual for the Building Energy Efficiency Standards*~~
- *Compliance Options Approval Manual for the Building Energy Efficiency Standards*

There are a few special terms that are used in this Manual. The Commission ***approves*** the use of an ACM for compliance. Commission approval means that the Commission accepts the applicant's certification that an ACM meets the requirements of this Manual. The proponent of a candidate ACM is referred to as a ***vendor***. The vendor ~~must~~shall follow the procedure described in this ~~publication~~ document to publicly certify to the Commission that the ACM meets the ~~Commission's~~ criteria in this document for:

- *Accuracy* and *reliability* when compared to the DOE-2.1E reference program; and
- *Suitability* in terms of the accurate calculation of the correct energy budget, the printing of standardized forms, and the documentation on how the program demonstrates compliance.

In addition to explicit and technical criteria, Commission approval will also depend upon the Commission's evaluation of:

- *Enforceability* in terms of reasonably simple, reliable, and rapid methods of verifying compliance and application of energy efficiency features modeled by the ACM and the inputs used to characterize those features by the ACM users.
- *Dependability* of the installation and energy savings of features modeled by the ACM. The Commission ~~must~~will ~~-~~evaluate the probability of the measure actually being installed and remaining functional. The Commission ~~must~~shall also determine that the energy impacts of the features that the ACM is capable of modeling will be reasonably accurately reflected in real building applications of those features. In particular, it is important that the ACM does not encourage the replacement of actual energy savings with theoretical energy savings due to tradeoffs allowed by an ACM.

For the vendor, the process of receiving approval of an ACM includes preparing an application, working with the Commission staff to answer questions from either Commission staff or the public, and providing any necessary additional information regarding the application. The application includes the four basic elements outlined below. The Commission staff evaluates the ACM based on the completeness of the application and its overall responsiveness to staff and public comment.

The four basic requirements for approval include:

1. Required capabilities:

- The ACM shall have all the ~~certain~~ required input capabilities explained in Chapter 2. ~~, and may have optional capabilities such as those outlined in Chapter 3.~~

- ~~All Alternative Calculation Methods (ACMs) must pass the required capabilities tests explained in Chapter 5.~~ Alternative Calculation Methods (ACMs) may be approved for additional optional capabilities such as those described in Chapter 3~~listed in the certification application~~. ~~To be certified and approved for any optional capability the ACM must also pass the test(s) for that optional capability.~~

2. Accuracy of simulation:

   - The ACM shall demonstrate acceptable levels of accuracy by performing and passing the required certification tests discussed in Chapter 5.
   - The ACM vendor performs the certification tests in Chapter 5. The vendor conducts the specified tests, evaluates the results and certifies in writing that the ACM passes the tests. The Commission will perform spot checks and may require additional tests to verify that the proposed ACM is appropriate for compliance purposes.
   - When energy analysis techniques are compared, two potential sources of discrepancies are the differences in user interpretation when entering the building specifications, and the differences in the ACM's algorithms (mathematical models) for estimating energy use. The approval tests minimize differences in interpretation by providing explicit detailed descriptions of the test buildings that must~~must~~shall be analyzed. For differences in the Alternative Calculation Method's (ACM's) algorithms, the Commission allows algorithms that yield equivalent results.

3. ~~Compliance supplement~~User's Manual or Help System:

   - The vendor ~~must~~shall develop a ~~compliance supplement~~ user's manual and/or help system ~~to their ACM user's manual~~ that meets the specifications ~~presented~~ in ~~Chapter~~ Chapter 4.

4. Program support:

   - The vendor ~~must~~shall provide ongoing user and building department support as described in Chapter 6.

The Commission may hold one or more workshops with public review and vendor participation to allow for public review of the vendor's application. Such workshops may identify problems or discrepancies that may necessitate revisions to the application.

Commission approval of Alternative Calculation Methods (ACMs) is intended to provide flexibility in complying with the ~~Energy Efficiency~~ Standards. However, in achieving this flexibility, the ACM ~~must~~shall not degrade the standards or evade the intent of the ~~standards~~ Standards to achieve a particular level of energy efficiency. The vendor has the burden of proof to demonstrate the accuracy and reliability of the ACM relative to the reference method and to demonstrate the conformance of the ACM to the requirements of this manual.

1.1 Application Checklist

The following items shall be included in an application package submitted to the Commission for ACM approval:

- **ACM Vendor Certification Statement.** A copy of the statement contained in Appendix NA, signed by the ACM vendor, certifying that the ACM meets all Commission requirements, including accuracy and reliability when used to demonstrate compliance with the energy standards.
- **Computer Runs.** Copies of the computer runs specified in Chapter 5 of this manual on ~~floppy diskettes or other Commission~~ machine readable form as specified in Chapter 5 to enable verification of the runs.
- **Compliance Supplement and User's Manual.** The vendor ~~must~~shall submit a complete copy of their ACM user's manual, including material on the use of the ACM for compliance purposes ~~as well as a complete copy of their ACM Compliance Supplement explained in Chapter 4~~.
- **Copy of the ACM and Weather Data.** A ~~floppy diskette or other Commission~~ machine readable ~~form~~ copy of the ACM ~~in IBM PC compatible format~~ for random verification of compliance analyses. The vendor ~~must~~shall provide weather data for all 16 climate zones ~~or the means to automatically generate the weather~~

~~data for all of the tests and any compliance run~~. ~~The ability to generate the weather data used for tests and compliance runs must be integral to the ACM.~~

- **TDV Factor Documentation.** The ACM shall be able to apply the TDV multipliers described in ACM Joint Appendix III. ~~**Weather Data Documentation.** The vendor must submit a copy of the summarized weather data in those instances where their Alternative Calculation Methods (ACMs) use part year weather data rather than the Commission's standard full year weather data. Such part year weather must be based on the standard Commission full year, hourly weather data. The vendor must include documentation on the methodology used to develop the weather data from the official Commission hourly weather data and a thorough explanation of why this methodology will provide as accurate an estimate of energy use as using the full year, hourly data.~~
- **Application Fee.** The vendor shall provide an application fee of $1,000.00 (one thousand dollars) as authorized by Section 25402.1(b) of the Public Resources Code, made out to the "State of California" to cover costs of evaluating the application and to defray reproduction costs.

A cover letter acknowledging the shipment of the completed application package should be sent to:

Executive Director
California Energy Commission
1516 Ninth Street, MS-39
Sacramento, CA 95814-5512

Two copies of the full application package should be sent to:

ACM Nonresidential Certification
California Energy Commission
1516 Ninth Street, MS-26
Sacramento, CA 95814-5512

Following submittal of the application package, the Commission may request additional information pursuant to Title 24, Section 10-110. This additional information is often necessary due to complexity of many Alternative Calculation Methods (ACMs). Failure to provide such information in a timely manner may be considered cause for rejection or disapproval of the application. A resubmittal of a rejected or disapproved application will be considered a new application, including a new application fee.

1.2 Types of Approval

This Manual addresses two types of ACM approval: full program approval (including amendments to programs that require approval), and approval of new program features and updates.

If ACM vendors make a change to their programs as described in 1.2.1 or 1.2.2, the Commission ~~must~~shall again approve the program. Additionally, any ACM program change that affects the energy use calculations for compliance, the modeling capabilities for compliance, the format and/or content of compliance forms, or any other change which would affect a building's compliance with the Energy Efficiency Standards requires another approval.

Changes that do not affect compliance with the standards such as program changes to the user interface may follow a simplified or streamlined procedure for approval of the changes. To comply with this simpler process, the ACM vendor shall certify to the Commission that the new program features do not affect the results of any calculations performed by the program, shall notify the Commission of all changes and shall provide the Commission with one updated copy of the program and User's Manual. Examples of such changes include fixing logical errors in computer program code that do not affect the numerical results (bug fixes) and new interfaces.

1.2.1 Full Approval & Re-Approval of Alternative Calculations Methods (ACMs)

The Commission requires program approval when a candidate ACM has never been previously approved by the Commission, when the ACM vendor makes changes to the program algorithms, or when any other change occurs that in any way affects the compliance results. The Commission may also require that all currently approved Alternative Calculation Methods (ACMs) be approved again whenever substantial revisions are made to the Standards or to the Commission's approval process.

The Commission may change the approval process and require that all Alternative Calculation Methods (ACMs) be approved again for several reasons including:

a) If the standards undergo a major revision that alters the basic compliance process, then Alternative Calculation Methods (ACMs) would have to be updated and re-approved for the new process.

~~c)~~b) If new analytic capabilities come into widespread use, then the Commission may declare them to be required ACM capabilities, and may require all ACM vendors to update their programs and submit them for re-approval.

When re-approval is necessary, the Commission will notify all ACM vendors of the timetable for renewal. There will also be a revised *ACM Approval Manual* published with complete instructions for re-approval.

An ACM program must~~must~~~~shall~~ be re-approved for new optional modeling capabilities when the vendor adds those optional capabilities. The vendor ~~must~~shall provide a list of the new optional capabilities and demonstrate that those capabilities are documented in revised user documentation. This may not include computer runs previously submitted.

Re-approval ~~must~~shall be accompanied by a cover letter explaining the type of amendment(s) requested and copies of other documents as necessary. The timetable for re-approval of amendments is the same as for full program approval.

1.2.2 Approval of New Features & Updates

Certain types of changes may be made to previously approved nonresidential Alternative Calculation Methods (ACMs) through a streamlined procedure, including implementing a computer program on a new machine and changing executable program code that does not affect the results.

Modifications to previously approved Alternative Calculation Methods (ACMs) including new features and program updates are subject to the following procedure:

- The ACM vendor shall prepare an addendum to the Compliance Supplement or ACM user's manual, when new features or updates affect the outcome or energy efficiency measure choices, describing the change to the ACM. If the change is a new modeling capability, the addendum shall include instructions for using the new modeling capability for compliance.
- The ACM vendor shall notify the Commission by letter of the change that has been made to the ACM. The letter shall describe in detail the nature of the change and why it is being made. The notification letter shall be included in the revised Compliance Supplement or ACM user's manual.
- The ACM vendor shall provide the Commission with an updated copy of the ACM and include any new forms created by the ACM (or modifications in the standard reports).
- The Commission will respond within 45 days. The Commission may approve the change, request additional information, refuse to approve the change or require that the ACM vendor make specific changes to either the Compliance Supplement addendum or the ACM program itself.

With Commission approval, the vendor may issue new copies of the ACM with the Compliance Supplement addendum and notify ACM users and building officials.

1.3 Challenges

Building officials, program users, program vendors, Commission staff or other interested parties may challenge any nonresidential ACM approval. If any interested party believes that a compliance program, an algorithm or method of calculation used in a compliance program, a particular capability or other aspect of a program provides inaccurate results or results which do not conform to the criteria described in Section 5.1.4 the party may initiate the challenge of the program. (Please see Section 1.5 Decertification of Alternative Calculation Methods (ACMs) for a description of the process for a challenge.)

1.4 Alternative ACM Tests

Chapter 5 of this Manual contains a series of tests to verify that Alternative Calculation Methods (ACMs) accurately demonstrate compliance. An ACM vendor may propose alternate tests when the vendor believes that one or more of the standard tests are not appropriate for the ACM. The Commission will evaluate the alternate tests and will accept them if they are found to reflect acceptable engineering techniques.

If alternate tests are accepted by the Commission, the tests will be available for use by all Alternative Calculation Methods (ACMs). An alternate test will coexist with the standard test presented in this Manual until the Manual is revised. When a new version of this Manual is produced, the alternative test may be substituted for the current test or may continue to coexist with the original test.

1.5 Decertification of Alternative Calculation Methods (ACMs)

The Commission may *decertify* (rescind approval of) an alternative calculation method through the following means:

- All ACMs are decertified when the Standards undergo substantial changes which usually occur every three years.
- Any ACM can be decertified by a letter from the ACM vendor requesting that a particular version (or versions) of the ACM be decertified. The decertification request ~~must~~shall briefly describe the nature of the program errors or "bugs" which justify the need for decertification.
- Any "initiating party" may commence a procedure to decertify an ACM according to the steps outlined below. The intent is to include a means whereby unfavorable comparisons with the reference method, serious program errors, flawed numeric results, improper forms and/or incorrect program documentation not discovered in the certification process can be verified, and use of the particular ACM version discontinued. In this process, there is ample opportunity for the Commission, the ACM vendor and all interested parties to evaluate any alleged problems with the ACM program.

  NOTE 1: The primary rationale for a challenge is unfavorable comparison with the reference method which means that for some particular building design with its set of energy efficiency measures, the ACM fails to meet the criteria used for testing ACMs described in Section 5.1.4.

  NOTE 2: Flawed numeric results where the ACM meets the test criteria used in Section 5.1.4. In particular when an ACM indicates the failure of a building to comply by a significant margin even though the reference method indicates that the building complies, i.e., the reference method has a proposed design building energy budget less than or equal to the standard design building energy budget.

  An ACM is allowed to have inputs for energy efficiency measures that it cannot model. The proper method for an ACM to accommodate such inputs and features is for the ACM to automatically ensure compliance failure by a significant margin whenever that feature's inputs are entered by the user. In such cases numeric results are not directly relevant as long as the building fails to comply by an adequate margin. Lighting and receptacle/process loads however ~~must~~shall be within the numerically acceptable ranges.

Following is a description of the process for challenging an ACM or initiating a decertification procedure:

1. Any party may initiate a review of an ACM's approval by sending a written communication to the Commission's Executive Director. (The Commission may be the initiating party for this type of review by noticing the availability of the same information listed here.)

   The initiating party shall:

   a) State the name of the ACM and the program version number(s) which contain the alleged errors;

   b) Identify concisely the nature of the alleged errors in the ACM which require review;

   c) Explain why the alleged errors are serious enough in their effect on analyzing buildings for compliance to justify a decertification procedure; and,

   d) Include appropriate data on IBM PC compatible floppy diskettes and/or information sufficient to evaluate the alleged errors.

2. The Executive Director shall make a copy or copies of the initial written communication available to the ACM vendor and interested parties within 30 days.

3. Within 75 days of receipt of the written communication, the Executive Director may request any additional information needed to evaluate the alleged ACM errors from the party who initiated the decertification review process. If the additional information is incomplete, this procedure will be delayed until the initiating party submits complete information.

4. Within 75 days of receipt of the initial written communication, the Executive Director may convene a workshop to gather additional information from the initiating party, the ACM vendor and interested parties. All parties will have 15 days after the workshop to submit additional information regarding the alleged program errors.

5. Within 90 days after the Executive Director receives the application or within 30 days after receipt of complete additional information requested of the initiating party, whichever is later, the Executive Director shall either:

   a) Determine that the ACM need not be decertified; or,

   b) Submit to the Commission a written recommendation that the ACM be decertified.

6. The initial written communication, all other relevant written materials, and the Executive Director's recommendation shall be placed on the consent calendar and considered at the next business meeting after submission of the recommendation. The matter may be removed from the consent calendar at the request of one of the Commissioners.

7. If the Commission approves the ACM decertification, it shall take effect 60 days later. During the first 30 days of the 60-day period, the Executive Director shall send out a Notice to Building Officials and Interested Parties announcing the decertification.

All initiating parties have the burden of proof to establish that the review of alleged ACM errors should be granted. The decertification process may be terminated at any time by mutual written consent of the initiating party and the Executive Director.

As a practical matter, the ACM vendor may use the 180- to 210-day period outlined here to update the ACM program, get it re-approved by the Commission, and release a revised version that does not have the problems initially brought to the attention of the Commission. Sometimes the ACM vendor may wish to be the initiating party to ensure that a faulty program version is taken off the market.

~~Figure 1-1 Decertification Timeline~~

~~Days from Initiating Decertification Procedure~~

~~0~~	~~15~~	~~30~~	~~45~~	~~60~~	~~75~~	~~90~~	~~105~~	~~120~~	~~135~~	~~150~~	~~165~~	~~180~~	~~210~~	~~240~~	~~270~~	~~300~~

~~Step 1~~

~~Step 2~~

[redacted]

~~Step 3~~

[redacted]

~~Steps 4 and 5~~

[redacted]

~~Step 6~~

[redacted]

~~Step 7~~

[redacted]

2. Required Capabilities Reference Method and Modeling for Alternative Calculation Methods (ACMs)

~~The purpose and policy of this ACM Approval Manual is to specify the California Energy Commission approval process for Alternative Calculation Methods (ACMs) and the assumptions and procedures of the reference method against which ACMs will be evaluated. This manual encompasses the reference method and performance compliance requirements and procedures for nonresidential buildings, hotels & motels, and high-rise residential buildings. A separate ACM Approval Manual covers the performance compliance procedures and requirements for the remaining building types, primarily low-rise residential buildings. The procedures and process described in this manual are designed to preserve the integrity of the performance compliance process relative to a reference method. The reference procedures and method described in this manual establish the basis of comparison for all ACMs. In particular, the approval process described in this manual is designed to ensure that a minimum level of energy efficiency is achieved by all buildings complying with the Building Energy Efficiency Standards regardless of the Alternative Calculation Method (ACM) used. This is accomplished by having the ACM meet certain test criteria for a series of ACM/Reference Method comparison tests, by specific input and output requirements for all ACMs, and by vendor-certification of the ACM's conformance to the requirements in this manual. This chapter describes the reference procedures for use with the reference computer program, (the reference calculation engine), version 110 of DOE 2.1E public domain computer program from the Lawrence Berkeley Lab, and the specific aspects of the reference method that are required for all ACMs.~~

~~In this manual the term "Standards" means the Building Energy Efficiency Standards, Title 24, Part 6, Chapter 1 of the California Code of Regulations. The term "compliance" means that a building design in an application for a building permit complies with the "Standards" and meets the requirements described for building designs therein. As indicated above, the term ACM stands for Alternative Calculation Method.~~

This Chapter specifies ~~the reference procedures for the~~ required capabilities that an ACM will be tested for and ~~also~~ specifies how the reference computer simulation program will be used for required ~~to~~ modeling capabilities. ~~the features.~~ All of the required capabilities are described in terms of the capabilities and algorithms of the Commission's reference program. An ACM ~~must~~shall account for the energy performance effects of all of the features described in this chapter ~~on a building's energy~~.

The modeling procedures and assumptions described in this chapter ~~for each capability are for~~ apply to both the *standard design* and *proposed design~~s~~*. The requirements for the *standard design* include those that ACMs ~~must~~shall apply to new features, altered existing features, unchanged existing features or all of the above. In order for ~~a program~~ an ACM to become ~~certified~~approved, it ~~must~~shall, at a minimum, accept all of the required inputs and meet the test criteria when compared against the reference computer program using procedures and assumptions as required in the sections describing the capabilities.

~~2.1~~1.1 Compliance ~~- Required Capabilities~~

~~2.1.1~~1.1.1 Type of Project Submittal

ACMs ~~must~~shall require the user to identify the type of project for which compliance is being demonstrated. The~~se~~ ACMs ~~must~~shall require the user to choose one of the following options:

- New Building
- Addition Alone (modeled as new building but labeled on output) (when ACM is approved for this optional capability)
- Addition Plus Alteration of Existing Building (when ACM is approved for this optional capability)
- Alteration of Existing Building (when ACM is approved for this optional capability)

These ~~input~~ compliance options are required even though compliance for existing buildings is an optional ~~the ACM may not have the~~ capability ~~of performing any existing building analysis~~. Optional capabilities are described in the following chapter of this manual. An ~~Any~~ ACM shall not produce compliance reports or operate in a compliance mode when users specify features that require optional modeling capabilities for which the ACM is not approved. ~~without the capability of analyzing existing building alterations with or without an addition must inform the user that the ACM cannot analyze alterations in existing buildings and that the ACM must go into a noncompliance mode when the user selects a type of project it is incapable of analyzing. This precludes any compliance output for such cases. Special calculation and reporting for ACMs with automated analysis of additions and alterations are required and are covered in Section 3.1 Optional Compliance Capabilities and Section 2.7 Required Standard Reports.~~

1.1.2 New Building or Addition Alone

ACMs are required to be able to perform compliance on new buildings and additions as if they were new (or newly conditioned), stand-alone, buildings. ACMs may do this by treating an addition alone as a new building, but an addition modeled in this way shall be reported on all output forms as a **Stand Alone Addition.**

~~2.1.2~~1.1.3 Scope of Compliance Calculations~~Scope of Compliance Submittal~~

For each building or separately permitted space, ACMs ~~must~~shall also require the user to identify the scope of the compliance submittal from the following list:

- Envelope only
- Mechanical only
- Envelope and Lighting
- Envelope and Mechanical
- Lighting and Mechanical
- Envelope, Lighting and Mechanical

Each of these situations requires specific assumptions, input procedures and reporting requirements. Mod~~e~~eling assumptions are ~~These requirements are~~ documented in Chapters 2 and 3. Reporting requirements are documented in ~~Required Loads Capabilities and Required Systems and Plant Capabilities and~~ Chapter 4 ~~Compliance Supplement~~. *ACMs ~~must~~shall only produce reports specific to the scope of the submittal determined for the run.* Hence an Envelope Only scope run is only allowed to produce ENV forms and PERF forms that are designated *Envelope Only* ~~and the tabulated total number of pages printed on the output must be consistent with this limited output requirement~~.

The information about installed service water heating system(s) is included in the mechanical compliance submittal forms. ACMs ~~must~~shall calculate the energy use for both the proposed system(s) and the reference system(s) [~~energy~~ TDV energy budget] and provide the results on the PERF forms. The energy budget is calculated in accordance with Section 2.~~5~~ 6 (Service Water Heating--Required capabilities) of this manual. If the energy used by the proposed water heating system(s) is less than the energy budget, the credit may be traded off for other building features. Alternatively, for high-rise residential buildings, users may show service water heating compliance by meeting the prescriptive requirements of Section 151(f)(8) of the Standards. When the compliance for the service water heating is shown prescriptively, tradeoff between the service water heating and other building components is not allowed.

When a building has a mixed scope of compliance, such as a speculative building where all the envelope is being permitted but the core includes lighting as well as portions of the envelope, **two** (or more) compliance runs ~~must~~shall be performed and forms from different runs ~~must~~shall be submitted for the appropriate spaces. The scope of submittal for the building core compliance run will be **Envelope & Lighting** and the scope of submittal for the compliance run for the remainder of the building will be **Envelope Only**.

The following modeling rules apply for when the scope of the compliance calculations do not include one of the following: the building envelope, the lighting system or the mechanical system.

~~1.1.3 New Building or Addition Alone~~

~~ACMs are required to be able to perform compliance on new buildings and additions as if they were new (or newly conditioned), stand-alone, buildings. ACMs may do this by treating an addition alone as a new building, but an addition modeled in this way must be reported on all output forms as a **Stand Alone Addition.**~~

~~1.1.4 Partial Permit Applications~~

~~Description ACMs must require the user to input the components of the building for which a permit is being requested. Building components are Envelope, Mechanical, and Lighting. In a partial permit application one or more of the following conditions may occur:~~

~~1. No envelope compliance (no envelope submittal)~~

~~2. No mechanical compliance (no mechanical submittal)~~

~~3. No lighting compliance (no lighting submittal)~~

~~Assumptions for each of these conditions for both the standard and proposed design are described below.~~

~~Note: A partial permit application involving no envelope compliance creates an exceptional condition. This requires either a copy of the previous envelope compliance approval or an equivalent demonstration by the applicant (to the satisfaction of the local enforcement agency) that the building is conditioned and an occupancy permit has previously been issued by the local enforcement agency.~~

~~The exceptional condition list must indicate the presence of an existing or previously-approved envelope documentation and form must be produced to document the existing envelope. No envelope (ENV) compliance forms may be output as part of the compliance output when the user selects this option.~~

Cases	*Modeling Rules for Proposed Design*	*Modeling Rules for ~~Reference~~Standard Design (All):*
No Envelope Compliance Mechanical Only Lighting and Mechanical	~~***No envelope compliance.***~~ The envelope shall be modeled according to the as-built drawings and specifications of the building or as it occurs in the previously-approved compliance documentation of the building. All envelope features and inputs required for ACMs by this manual ~~must~~shall be entered.	~~***No envelope compliance.***~~ The envelope shall be identical to the proposed design.
	Note: A partial permit application involving no envelope compliance creates an exceptional condition. This requires either a copy of the previous envelope compliance approval or an equivalent demonstration by the applicant (to the satisfaction of the local enforcement agency) that the building is conditioned and an occupancy permit has previously been issued by the local enforcement agency. The exceptional condition list shall indicate the presence of an existing or previously-approved envelope documentation and a form shall be produced to document the existing envelope. No envelope (ENV) compliance forms may be output as part of the compliance output when the user selects this option.	
No Mechanical Compliance Envelope Only Envelope and Lighting	~~***No mechanical compliance.***~~ ACMs shall model default heating and cooling systems according to the rules in Section 1.5.3.9~~2.4.2.26~~ (Modeling Default Heating and Cooling Systems). ACMs may not allow the entry of an HVAC system and ~~must~~shall automatically model the default system. Economizer	~~***No mechanical compliance.***~~ The mechanical systems shall be identical to the proposed design.

	controls will be modeled as indicated in the Standard Design Assumptions for Air Economizers based on system total (sensible + latent) cooling capacity.	
No Lighting Compliance Envelope Only Mechanical Only Envelope and Mechanical	***~~No lighting compliance.~~*** Previously-approved lighting plans with approved lighting compliance forms may be entered as Tailored Lighting at the approved lighting power levels shown in the construction and previously-approved compliance documents and installed as approved. The exceptional conditions list on the PERF-1 form ~~must~~shall indicate that previously-approved lighting plans and compliance forms ~~must~~shall be resubmitted with the application. In the absence of approved lighting plans and lighting compliance forms, the ACM shall model the lighting system according to Section 2.~~3~~4.2.1 (Lighting) using the rules for Lighting compliance not performed.	***~~No lighting compliance.~~*** With previously approved lighting plans, the lighting levels for each space shall be equal to the approved design. No lighting (LTG) compliance forms may be output with the compliance output. The local enforcement agency should verify that the lighting has already been approved and installed or, if recently designed and approved, should verify the independent lighting approval. In the absence of approved lighting plans and lighting compliance forms, the ACM shall model the lighting system according to Section 2.~~3~~4.2.1 (Lighting) using the rules for Lighting compliance not performed.

~~2.1.4~~1.1.4 Climate Zones

The program ~~must~~shall account for variations in energy use due to the effects of the sixteen (16) California ~~weather/~~climate zones. ~~Weather/~~Climate information for ~~the~~ compliance simulations shall use ~~is derived from~~ one of sixteen (16) ~~different~~ data sets described in ACM Joint Appendix II. ~~for the sixteen climate zones. These sixteen climate zone weather data sets are the official weather data for each zone and hourly data from other weather tapes may not be used for compliance purposes (see Section 2.6).~~ However, the data ~~from these tapes~~ may be adjusted to local conditions by methods described in ACM Joint Appendix II~~approved by the Commission or by the reference method (see Appendix C) that adjusts for local design temperature extremes~~. The same weather data ~~must~~shall be used for the standard and proposed designs. The ACM ~~must~~shall ~~use climate data and~~ accept input for latitude, longitude and elevation ~~of the weather file~~for the local condition ~~which will be used by the reference program and method to determine compliance~~. The ~~reference method~~ candidate ACM shall use~~s~~ a full 8760-hour year of ~~hourly~~ data, since TDV multipliers are applied for each hour. ~~. ACMs must either use the hourly data based on the CECREV2 ASCII data or summarized, sampled, or averaged data consistently derived from the CECREV2 ASCII hourly data files as long as the ACM passes the test criteria for all minimum tests.~~

~~2.1.5~~1.1.5 Reference Year

The reference year determines the day (Monday, Tuesday, etc.) for the first day in the weather file which in turn determines the weather days for which holidays and weekends occur. Nonresidential ACMs shall use the Reference Year as specified in Joint Appendix II.

~~The 1991 calendar year must be used as the basis for the frequency and timing of the occurrence of holidays, Saturdays and Sundays. The reference method observes the holidays listed in Section 2.3.3.3 of this manual. This is a fixed compliance input that must be the same for both the standard and proposed designs. The reference method uses CECREV2 hourly data in WYEC format for the sixteen climate zones. Weather data is available in DOE compressed format for the reference computer simulation program along with programs to produce weather data from these files customized to the design weather data for each city in California. The weather data is also available in archived ASCII format for all 8760 hours for each of the 16 climate zones.~~

~~Developers of ACM programs may request an electronic copy of the weather data and programs to customize the weather information for each city in California by writing to:~~

~~***California Energy Commission***~~

~~***Energy Efficiency Division***~~

~~***Attention: Nonresidential ACM Manual***~~

~~***1516 Ninth Street, MS-26***~~

~~***Sacramento, California 95814***~~

1.1.6 Time Dependent Valuation

The candidate ACM shall calculate the hourly energy use for both the standard design and the proposed design by applying a TDV factor for each hour of the reference year. TDV factors have been established by the CEC for residential and nonresidential occupancies, for each of the sixteen climate zones, and for each fuel (electricity, natural gas, and propane). The procedures for Time Dependent Valuation of energy are documented in ACM Joint Appendix III.

~~1.1.7 Output Reports~~

~~Compliance output is highly restricted in quantity and format. All non-default inputs must be reflected directly in the output. This can also be accomplished by changes in directly-related output values and the forms reflecting those changes must be printed when any compliance output forms are selected. Exceptional user entries or values outside of "normal" ranges must be printed and must be clearly flagged in the output so that the plan checker and field checker can and will readily note these user entries or values. Exceptional user entries include such entries as process loads, tailored ventilation, and tailored lighting and modifications to certain default values specified herein. When the user enters such exceptional input in a compliance run, the ACM must automatically print the forms containing such user inputs and exceptional conditions must be indicated on the PERF-1 form as part of the special conditions verification checklist for the plan checker and field inspector. This verification list must command the attention of anyone reviewing the output and must be included with all performance compliance submittals even if no exceptional conditions are reported. In particular exceptional inputs must be reflected on the relevant ENV, MECH, or LTG forms and the PERF-1 Form and the forms showing these exceptional entries must be printed when any compliance output forms are selected.~~

~~For a compliance documentation run, the ACM must automatically determine the forms to be printed and the total number of pages (T) required to print those forms and must print exactly that number of pages and all ACM-determined forms. This determination must be made based on the user's description of the scope of compliance, the building characteristics, and the user's selection of a compliance run. ACMs may not allow the user to select specific forms to be printed in a compliance run (as distinguished from a diagnostic run) where printed or disk compliance output is requested. Each page (N) of the required output must indicate Page N of T in the page header, the unique compliance runcode and the initiation time of the compliance run. The PERF-1 must list or indicate all of the forms required for a valid submittal, including those required to be done by hand.~~

~~Diagnostic information not directly related to compliance or required to be reported by this manual shall not be printed or output in printer format for a compliance documentation run. ACMs may have a separate type of diagnostic output for the user's use but it must be distinctly different from compliance output. Distinctly different means that diagnostic output could not be confused with compliance output by a plan checker. At a minimum, diagnostic output shall not use form headers or output formats similar to compliance forms.~~

1.1.7 Reference Method Comparison Test~~ings~~ ~~Certification~~

A specific set of ~~compliance~~ reference method comparison tests ~~to evaluate ACMs~~ are described in Chapter 5. ~~Using t~~These tests verify that ~~,~~ the differences between the reference method's compliance margins and an ACM's compliance margins ~~will be subjected to~~ meet specific ~~test~~ criteria. The~~se test~~ criteria ~~must~~shall be met

for every test. The ~~test~~ criteria are designed to minimize the possibility that an approved ACM will "pass" ~~determine that a specific proposed~~ a building ~~complies with California's Building Energy Efficiency Standards~~ when the reference method would ~~determine otherwise~~not. The test criteria ~~specifically~~ do not prevent an ACM from being conservative with regard to compliance but requires the ACM to produce results similar to those of the Commission's reference program. In addition to ~~satisfying the~~ meeting the test criteria, the ACM ~~must~~shall conform to all of the input and output requirements described in this manual ~~and some calculation procedural requirements that all ACMs must meet~~.

~~These tests simultaneously exercise various ACM analytical capabilities and various aspects of the custom budget process relative to the reference program and the official reference custom budget procedures. To qualify for approval for compliance use, an ACM must have compliance margins that meet specified acceptance criteria relative to the reference procedures' compliance margins for each and every specified test.~~

An ACM may use ~~these~~ the reference method procedures directly or ~~they~~ the ACM may use other procedures that ~~are similar to these procedures or procedures that~~ approximate the reference method results with sufficient accuracy to meet the criteria described in Chapter 5 ~~for the minimum capability tests~~. In particular, when this manual uses the term "ACMs ~~must~~shall model" it means that ACMs ~~must~~shall be able ***to quantitatively approximate*** the changes in energy use due to particular envelope, lighting, or HVAC features of a building in such a way that satisfies the ~~ACM is capable of meeting all~~ test criteria in Chapter 5 for each and every test. ~~All~~ ACM estimates for lighting and receptacle energy use ~~must~~shall be within a few percent of the reference method results, while a larger tolerance is acceptable for HVAC and building envelope measures. ~~ACMs, however, **must also be capable of accepting appropriate inputs and producing the required outputs subject to the limitations** described in this chapter and elsewhere in this manual to be approved for compliance purpose~~

~~2.7~~1.2 Compliance Documentation~~Required Standard Reports~~

Compliance documentation includes the forms, reports and other information that is submitted to the building department with an application for a building permit. The purpose of the compliance documentation is to enable the plans examiner to verify that the building design complies with the Standards and to enable the field inspector to readily identify building features that are required for compliance.

ACMs must automatically produce the CEC standard reports which are an essential part of the compliance documentation. The standard reports are highly restricted in quantity and format. All non-default inputs shall be reported on the appropriate report. Exceptional user entries outside of "normal" range shall be printed and shall be clearly flagged in the compliance documentation for the attention of the plan checker and field inspector. Exceptional user entries include process loads, tailored ventilation, and tailored lighting and modifications to certain default values. When the user enters such exceptional input in compliance calculations, the ACM shall automatically print the forms containing such user inputs. Exceptional conditions shall be indicated on the PERF-1 form. The exceptional conditions section shall be prominent on the compliance documentation and shall be included even if no exceptional conditions are reported.

The ACM shall automatically determine the forms to be printed and the total number of pages (T) required to print those forms and shall print exactly that number of pages and all ACM-determined forms. This determination shall be made based on the user's description of the scope of compliance, the building characteristics, and the user's selection of a compliance run. ACMs may not allow the user to select specific forms to be printed in a compliance run (as distinguished from a diagnostic run~~)~~ where specific reports may be requested). Each page (N) of the required output shall indicate Page N of T in the page header, the unique compliance run code, and the time of the compliance run. The PERF-1 shall list or indicate all of the forms required for a valid submittal, including those required to be done by hand.

An ACM shall produce the compliance documentation (in a format approved by the Commission) only when a modeled building design complies with the Standards. Reports not directly related to compliance and not required to be reported in this manual shall not be included in the compliance documentation. Too much or too little information obstructs enforcement. Secondary or irrelevant information may confuse the building official or wastes his/her time. On the other hand, a lack of relevant information may lead to enforcement errors or encourage cheating. To be approved for compliance use, an ACM cannot allow the user to directly select the

compliance forms to be printed. Each ACM shall determine the compliance output based on the user's input description of the building and the type of compliance run for the building. ACMs may produce additional reports which are not part of the compliance documentation, but these reports should be formatted to make it clear to the plans examiner and the field inspector that the reports are not part of the compliance documentation.

~~All nonresidential ACMs must be able to automatically produce certain reports in a standard format that has been approved by the Commission, the sample forms in Appendix E of this manual meet this requirement when a building is determined to comply with the Standards. These standard reports are required to enable building officials to quickly and accurately evaluate the results of the various ACMs with limited additional training.~~ The standard reports ~~required output forms~~ are intended to be as similar as possible to the compliance forms used in the prescriptive compliance approach so that those who are familiar with the prescriptive forms will more easily be able to find information on ~~the output from the~~ performance approach reports. ~~In fact, with the exception of the PERF-1 form, other forms are nearly duplicates of prescriptive forms or full-page portions of the prescriptive forms.~~ To allow the optional capabilities of Partial Compliance, Alterations, or automatic modeling of Additions Modeled with the Existing Building, there are distinct additional forms describing existing building components and systems that ~~must~~shall be printed separately than the forms describing the altered or new building components and systems and ~~must~~shall have ~~**ALL**~~ **all** text in lowercase type.

~~In the sample form formats in Appendix E, t~~The first pages (signature pages) of the prescriptive ENV-1, LTG-1, and MECH-1 certificates of compliance are consolidated on the first page of the PERF-1 form. The PERF-1 is the Certificate of Compliance for the performance approach and all three parts of the PERF-1 form (at least three pages) ~~must~~shall be included as part of the plans. ~~All forms with the term "Certificate of Compliance" in the header of the sample forms must be attached as part of the plans submittal.~~ Typically the pages of these forms are adhered to a plan sheet and submitted with the plans. These forms are considered to be an integral part of the plans and are to be recorded in exactly the same manner as a set of plans and retained for the same period of time as official records of the plans.

~~An ACM must be able to print standard reports/compliance forms (formats approved by the Commission) when a modeled building design complies with the Standards as described in the reference procedure. The purpose of compliance output is to facilitate enforcement of the Standards by providing the local enforcement agency with the precise amount of information needed to accurately verify compliance with the Energy Efficiency Standards and to verify conformity of the building design with the modeled or simulated building. Too much or too little information obstructs enforcement. Secondary or irrelevant information confuses the building official or wastes his time. On the other hand, a lack of relevant information may lead to enforcement errors or encourage cheating. To be approved for compliance use, an ACM cannot allow the user to directly select the compliance forms to be printed. Each ACM must determine the compliance output based on the user's input description of the building and the type of compliance run for the building.~~

~~In addition, a~~An ACM ~~must~~shall not ~~be able to~~ print compliance documentation ~~form formats~~ when a ~~modeled~~ proposed building design does not comply with the ~~building s~~Standards, ~~-~~ i.e. when a proposed building design modeled by an approved ACM in accordance with the reference procedure has an estimated TDV energy ~~budget~~ that exceeds the ~~estimated~~ TDV energy budget ~~of the standard building design~~, compliance forms ~~must~~shall not be printed, displayed on screen, or written on disk. An ACM may produce ~~is only required to provide a minimum of~~ diagnostic ~~results~~ reports for buildings that do not comply. This diagnostic reports shall be formatted in a manner significantly different from the compliance documentation, and may include information to help the energy analyst identify measures to bring the building into compliance, ~~minimum information~~ including ~~es~~ the TDV energy use components of the proposed design and the standard design. Non complying reports ~~of the energy budget in source kBtu per ft^2 per year and the total source energy use budget for both proposed and standard building designs and the compliance margin. An ACM may also provide other diagnostic output when a building fails to comply, but all diagnostic output must be so different from the compliance output (in format, layout, and content) that a reasonable person could not confuse diagnostic output with compliance output. Each page or display screen of noncompliance output must indicate: DIAGNOSTIC OUTPUT ONLY - NOT FOR COMPLIANCE USE. An ACM that has noncompliance output MUST~~ shall not report run codes, ~~initiation~~ simulation times, or total page counts, ~~on noncompliance output or display. Similarly, noncompliance output **MUST NOT** use~~ approved form headers ~~or~~, header information or include any formatting features used for compliance documentation. ~~at the top of a page.~~ Producing

~~Resemblance of~~ noncompliance reports that resemble compliance documentation ~~output to compliance forms~~ is sufficient grounds for rejection of the ACM ~~for use as a compliance computer program~~.

~~Compliance output is highly restricted in quantity and format. All non-default inputs **must** be reflected directly in the output. This can also be accomplished by changes in directly-related output values and the forms reflecting those changes **must** be printed when any compliance output forms are selected. Exceptional user entries or values outside of "normal" ranges must be printed and must be clearly flagged in the output so that the plan checker and field checker can and will readily note these user entries or values. Exceptional user entries include such entries as tailored lighting and modifications to certain default values specified herein. When the user enters such exceptional input in a compliance run, the ACM must automatically print the forms containing such user inputs. Exceptional conditions must be indicated on the PERF-1 form as part of the special conditions verification checklist for the plan checker and field inspector.~~

~~This verification list must command the attention of anyone reviewing the output and must be included with all performance compliance submittals even if no exceptional conditions are reported. In particular exceptional inputs **must** be reflected on the relevant ENV, MECH, or LTG forms **and** the PERF-1 Form and the forms showing these exceptional entries **must** be printed when any compliance output forms are selected. Typically exceptional conditions or use of non-default values require additional backup information to be submitted. This information may be attached to the compliance form output submittal or included as additional ACM printed information following the package of approved compliance forms.~~

~~For a compliance documentation run, the ACM must automatically determine the forms to be printed and the total number of pages (T) required to print those forms and must print exactly that number of pages and all ACM-determined forms. The determination of the total number of pages (T) must be made based on the user's description of the scope of compliance, the building characteristics, and the user's selection of a compliance run. ACMs may not allow the user to select specific forms to be printed in a compliance run (as distinguished from a diagnostic run) where printed or disk compliance output is requested. Each page (N) of the required output must indicate Page N of T in the page header, the unique compliance runcode and the initiation time of the compliance run. The PERF-1 must list or indicate all of the forms required for a valid submittal, including those required to be done by hand.~~

ACMs ~~must~~shall interlock program input and compliance output so that the two are always consistent. ~~to prevent any modifications to input files that is inconsistent with the compliance run and compliance output for the unmodified building input file. At a minimum, a~~Any alterations in the user input ~~must~~shall result in a new run ~~initiation~~ time, ~~and~~ run code ~~on any compliance output generated thereafter~~ and ~~a~~ completely new ~~full~~ set of compliance ~~output~~ documentation for the type of compliance selected ~~must be printed when the ACM user has selected compliance output~~. ~~In other words the compliance output is interlocked to a specific set of user input, this may be done by having a compliance runs use only information from a specific SAVED user input file or by having the ACM automatically save the input file as a part of the compliance run sequence. The ACM vendor is encouraged to restrict compliance output to be only generated from saved input files whose characteristics (size, creation date, and name) are indicated on the PERF-1 form.~~

User inputs ~~must~~shall appear on the ACM compliance documentation ~~reports~~ but the reporting of prescribed input assumptions is usually unnecessary since ACMs are required to automatically use these inputs. Compliance documentation shall only include ~~The Commission does not want to encourage debate on prescribed assumptions at the local enforcement agency. Commission staff workshops and Commission hearings for changes to this manual are the appropriate forums for debating such ACM restrictions. ACMs are only allowed to report~~ the prescribed inputs or assumptions that are required by the building official to verify compliance. When inputs with standard defaults are modified by the user, the modified value ~~must~~shall be distinctly identified (flagged) in the ~~standard reports~~ compliance documentation to alert the local enforcement agency of an exceptional condition for compliance. This enables ~~so that it can be verified by~~ the code official to verify that the alternate value is acceptable for compliance, is consistent with the plans and specifications, and is verifiable in the field. ~~e and corresponds to special features of the building documented in the plans and included as part of the building itself.~~

~~The format of the standard reports is designed to provide consistency with the prescriptive forms to reduce the amount of training required for the staff of local enforcement agencies. Consistency amongst the forms used for the prescriptive and performance approaches and amongst approved ACMs also fosters better and easier enforcement. Thus a standard format and style for reporting building energy efficiency compliance, reasonably~~

~~consistent with the prescriptive forms in the Nonresidential Manual is required for all ACMs. However, minor modifications to the reports may be allowed in order to accommodate optional special modeling capabilities of an ACM. All additional reports and printed output information must be approved through the certification process.~~

To accommodate the optional capabilities of partial compliance, alter~~n~~ations, and ~~modeling~~ additions ~~with the existing building and alterations and deter circumvention of the Standards~~, ~~all~~ ACMs ~~MUST~~shall report all new or altered user-entered building components and descriptive information completely in **UPPERCASE** type. ACMs with the capabilities for partial compliance, automatic modeling of additions with the existing building or modeling alterations in an existing building ~~MUST~~shall report all information on existing, previously-approved building components that are not altered in **lowercase** type. For partial compliance the ACM ~~must~~shall produce the special EXISTING-ENV forms for the existing envelope. Partial compliance applicants with building envelopes approved within the previous two years ~~must~~shall supply envelope compliance information along with the EXISTING-ENV forms. This is to insure that the local enforcement agency can ~~readily determine~~ verify that the existing envelope ~~has indeed complied~~ complies ~~and that the use of existing building components that do not have to meet the requirements of the Building Energy Efficiency Standards~~ and to distinguish these modeled components (same for both standard design and proposed design) from those that are new or have been altered.

The required reports shown in this section should be formatted to fit a 8 ½ x 11 in. page. ~~follow a format that can be reproduced with simple ASCII characters on any standard printer. The format is 75 characters per line and 60 lines per page. Using a standard 10-character-per-inch typeface (such as Courier), this format translates into a 0.5" margin top, bottom, left and right on letter-size (8.5"x11") paper.~~

~~2.7.1~~ 1.2.1 Certificate of Compliance Form(s)

(PERF-1, ENV-1, EXISTING-ENV, LTG-1, EXISTING-LTG, MECH-1, and EXISTING-MECH)

The first standard report that ~~must~~shall be produced by all ACMs is the Certificate of Compliance which is divided into four sections: the Performance Summary (PERF-1 forms), Envelope (ENV-1 form), lighting (LTG-1 form) and mechanical (MECH-1 forms). The Certificate of Compliance is required by Title 10, Section 1403(a) 2.A, B and C~~(2)~~ of the California Code of Regulations. For the performance approach all signature blocks for the Certificate of Compliance are combined onto the first page of the PERF-1 compliance output form. Normally all of these signature blocks ~~must~~shall be signed by the responsible designers. However, when an ACM is approved for optional partial compliance features and the partial compliance option is being used, only one or two of the signature blocks need be filled in. However, when this occurs the signatures ~~must~~shall be consistent with the type of partial compliance indicated on the Certificate of Compliance - PERF-1 forms and information reported on other output reports. The following are items to be included on the PERF-1 report.

- Date
- Project Name
- Project Address
- Principal Designer Envelope
- Documentation Author
- Building Permit #
- Date of Plans
- Building Conditioned Floor Area
- Climate Zone Building Type
- Phase of Construction
- Statement of Compliance (signature of documentation author)
- Envelope compliance (signature of licensed engineer/architect/contractor, date, license number)
- Lighting compliance (signature of licensed engineer/architect/contractor, date, license number)
- Mechanical compliance (signature of licensed engineer/architect/contractor, date, license number)
- Annual ~~Source~~TDV Energy Use Summary
- Building Complies – General Information
- Zone Information
- Exceptional Conditions Compliance Checklist

The PERF-1 ~~must~~shall list all optional capabilities utilized by the user and ~~must~~shall identify the zone(s), system(s) and/or plant(s) to which the optional capabilities apply. The PERF-1 ~~must~~shall also itemize the use of any of the following exceptional building compliance features on the exceptional conditions checklist, identifying the zone(s), systems(s) and or plant(s) to which the feature(s) apply.

The following are examples of building features that should be listed in the exceptional features section.

- Absorptance < 0.40
- Exterior surface ~~emmmissivity~~ emittance different from DOE2.1E defaults
- Any user-defined materials, layers, constructions, assemblies
- Window-wall-ratio > 0.40
- Skylight-roof-ratio > 0.05
- Solar heat gain coefficient (vertical or horizontal) < 0.40
- Fenestration u-factor (vertical or horizontal) < 0.50
- Use of "Alternate Default Fenestration Thermal Properties"
- Use of "Field-Fabricated Fenestration"
- Use of "Industrial/Commercial Work - Precision" occupancy
- Process fan power
- Process loads
- Tailored lighting input
- Lighting control credits
- Electric resistance heating or reheating
- Hydronic (water source heat pumps)
- Economizer installed on equipment below 75,000 ~~Btu~~Btu/h and 2500 cfm
- Tailored ventilation
- Demand control ventilation
- Variable speed drive fans
- Other high efficiency fan drive motors
- Verified sealed ducts in ceiling/roof spaces
- Any optional capabilities used

One consequence of **partial compliance** is that fewer compliance reports are required. The reports, the total number of pages, ~~and~~ the run code, and ~~initiation~~ time printed on each of the forms ~~must~~shall be consistent with the fewer number of pages allowed for partial compliance.

The PERF-1 form ~~must~~shall also provide information on the service water heating system, including the system type, the efficiency of the water heating system or its components, pipe insulation specifications, and the fuel source used for service hot water.

When partial compliance is used or an addition is modeled with an existing building and its existing building components, these components ~~must~~shall be flagged on the exceptional conditions checklist on the PERF-1 forms and the relevant EXISTING forms ~~must~~shall be produced.

~~[SAMPLE COMPLIANCE FORMS ARE SHOWN IN APPENDIX E.]~~

~~2.7.2~~1.2.2 Supporting Compliance Forms

The second type of standard reports that ~~must~~shall be produced by all ACMs are the supporting compliance forms. These are summarized below.

ENV-1	Envelope Compliance Summary – Performance	Opaque Surfaces Fenestration Surfaces – Site Assembled Glazing Exterior Shading
MECH-1	Certificate of Compliance Summary – Performance	System Features
MECH-1	Mechanical Compliance Summary – Performance	Duct Insulation Pipe Insulation
MECH-2	Mechanical Equipment Summary –	Chiller and Tower Summary

	Performance	DHW/Boiler Summary Central System Ratings Central Fan Summary VAV Summary Exhaust Fan Summary
MECH-3	Mechanical Compliance Summary – Performance	Mechanical Ventilation
MECH-5	Mechanical Distribution Summary – Performance Use Only	Verified Duct Tightness by Installer HERS Rater Compliance Statement
LTG-1	Certificate of Compliance – Performance	Installed Lighting Schedule Mandatory Automatic Controls Controls for Credit
LTG-1	Portable Lighting Worksheet – Performance	Portable lighting not shown on plans for office areas > 250 square feet Portable lighting shown on plans for office areas > 250 square feet Plans show portable lighting is not required for office areas > 250 square feet Building Summary – Portable Lighting

~~including the ENV-2, LTG-2, MECH-2, MECH-3 and MECH-4 forms. Examples of versions of these forms are in Appendix E.~~

~~The ACM may also have algorithms or subroutines for prescriptive compliance and generate prescriptive compliance forms ENV-3, LTG-3, and LTG-4 automatically.~~ If the ACM produces additional reports, ~~so,~~ the pages of these ~~forms~~ reports ~~must~~shall be tabulated and counted along with the performance forms for total page counts and verification on the PERF-1 form. ~~If these~~ Applicable reports (forms) shall not be included with compliance calculations unless the report is relevant. ~~forms are not used for a given performance compliance run, the ACM must not be able to print the forms with that performance compliance run. If they are utilized for a particular performance compliance run, the ACM must print them with the appropriate runtime and runcodes and correlate them with information on the PERF-1 form.~~

~~[SAMPLE COMPLIANCE FORMS ARE SHOWN IN APPENDIX E.]~~

~~*1.3Weather Data*~~

~~The energy budget and compliance runs must use a form of the weather data in the Commission's official sixteen (16) climate zone hourly weather files. The reference method uses a form of this data that is adjusted for local ASHRAE design data extremes. These files are available from the Commission in the WYEC2 (Weather Year for Energy Calculations) format recognized by ASHRAE and in DOE 2.1E packed weather data format. The reference method computer program for adjusting the climate zone weather data for local ASHRAE design data is also available from the Commission. Temperatures in the WYEC2 files for the sixteen climate zones have been adjusted to the average means and extremes of the weather data of the reliable substations in each climate zone. See *Climate Zone Weather Data Analysis and Revision Project*, Final Consultant Report, CEC Publication # P400-92-004, for more detail.~~

~~The WYEC2 data may be adjusted for local conditions, condensed, statistically summarized or otherwise reduced, as long as:~~

~~a) The weather data used to derive the simplified or reduced data is the Commission's official hourly weather data; and,~~

~~b) The ACM program meets all of the certification tests using the reduced weather data.~~

~~Whatever weather data and/or weather data reduction methods are used, approval of the ACM for compliance purposes with the standards is contingent upon the fact that approved weather data will be used for all compliance runs. The Commission must be able to verify that the proper weather data is being used by building permit applicants.~~

~~The official weather data for energy compliance is available from the Commission in a form suitable for 3.5" high density IBM PC-formatted diskettes. There are 16 climate zones, each with an 8760 hourly records containing raw data on a variety of ambient conditions such as:~~

~~Dry-bulb temperature~~

~~Wet-bulb temperature~~

~~Wind speed and direction~~

~~Direct solar radiation~~

~~Diffuse radiation~~

~~Each climate zone file includes the non-temperature data of a hypothetical city whose annual climate data has been judged representative of the construction locations within that zone. The values listed by climate zone for each climate zone in Table 2-16 must be used for any given climate zone if the ACM does not automatically make local city weather adjustments to the files.~~

~~As indicated above the reference method uses local city ASHRAE design data to adjust the climate zone weather data. These adjustments customize the temperature data, especially the extremes, to conform to the ASHRAE design data statistics for the city in question. This makes the energy calculations more realistic for energy compliance simulations. These adjustments are described in more detail in Appendix C.~~

~~Table 2-16: California Climate Zone Summary~~

~~Climate Zone~~	~~Latitude (Degree)~~	~~Longitude (Degree)~~	~~Elevation (Feet)~~
~~1~~	~~40.8~~	~~124.2~~	~~43~~
~~2~~	~~38.4~~	~~122.7~~	~~164~~
~~3~~	~~37.7~~	~~122.2~~	~~6~~
~~4~~	~~37.4~~	~~122.4~~	~~97~~
~~5~~	~~34.9~~	~~120.4~~	~~236~~
~~6~~	~~33.9~~	~~118.5~~	~~97~~
~~7~~	~~32.7~~	~~117.2~~	~~13~~
~~8~~	~~33.6~~	~~117.7~~	~~383~~
~~9~~	~~34.2~~	~~118.4~~	~~655~~
~~10~~	~~33.9~~	~~117.2~~	~~1543~~
~~11~~	~~40.2~~	~~122.2~~	~~342~~
~~12~~	~~38.5~~	~~121.5~~	~~17~~
~~13~~	~~36.8~~	~~119.7~~	~~328~~
~~14~~	~~35.7~~	~~117.7~~	~~2293~~
~~15~~	~~32.8~~	~~115.6~~	~~-30~~
~~16~~	~~41.3~~	~~122.3~~	~~3544~~

~~2.21.3~~ Building Shell ~~- Required Capabilities~~

All ACMs ~~must~~shall ~~receive~~ accept inputs for each different opaque surface (wall, roof/ceiling, or floor) that separates the conditioned space from the unconditioned or semi-conditioned space or the ground, including each demising wall (which consequently includes each party wall). These inputs include construction framing type, orientation and tilt, location and area for each exterior surface. An ACM ~~must~~shall also allow the user choose construction assemblies from ACM Joint Appendix IV. The choice determines the ~~to enter inputs to determine~~ heat transfer and heat capacity characteristics. The choice also determines the standard design construction. ~~of exterior opaque surfaces for the proposed design. The heat capacity of standard design exterior surface is identical to the heat capacity of the proposed design exterior surface. Based on this heat capacity, the Standards specify a required U-factor for the exterior surface that is used as the heat transfer characteristic for the standard design exterior surface.~~ Standard design Roof/Ceiling assemblies shall meet requirements of Standards Section 118 (e).

~~For all exterior surfaces/assemblies it is assumed that the U-factors listed in the building Standards include an exterior air film R-value of 0.17 h-ft^2-ºF/Btu, which the reference method strips off and replaces with a simulated outside air film resistance. Azimuthal orientation and tilts of surfaces must be entered to the nearest degree.~~ U-factors of exterior surfaces shall be obtained from ACM Joint Appendix IV.

Standard design requirements are labeled as applicable to one of the following options:

- Existing unchanged
- Altered existing
- New
- All

The ~~with the~~ default condition for these four specified conditions ~~being~~ is "All." An ACM without the optional capability of analyzing additions or alterations ~~must~~shall classify and report all surfaces as "All."

All ACMs ~~must~~shall separately report information about demising walls, fenestration in demising walls, exterior walls, and fenestration in exterior walls. Demising walls and demising wall fenestration separate conditioned spaces from enclosed unconditioned ~~or semi-conditioned~~ spaces. Party walls are always considered to be demising walls when they separate spaces controlled or occupied by different tenants. For the purpose of compliance, the adjacent enclosed spaces not controlled by the tenant of the given space or by a single manager of the building are unconditioned. This assumption means that party walls are treated as demising walls and adjacent tenant spaces are modeled as enclosed unconditioned spaces. To avoid modeling adjacent spaces that are not part of the permit, for purposes of Standards compliance, an ACM ~~must~~shall assume that the demising wall is adiabatic and no heat transfer occurs through it. ~~**In this manual, the word "unconditioned" is used to refer to both unconditioned and semi-conditioned spaces**~~

1.3.1 Spaces

1.3.1.1 Directly Conditioned Space

Directly conditioned space is space in a building that is directly heated and/or cooled through the delivery of conditioned air or by radiation from heating elements or interior surfaces.

1.3.1.2 ~~2.2.2.8~~ Return Air Plenums

Return air plenums are considered conditioned spaces and ~~must~~shall be modeled as part of the adjacent conditioned space.

1.3.1.3 Indirectly Conditioned Spaces

ACMs shall allow users to explicitly model all indirectly conditioned spaces. The internal loads (people, lights, equipment, etc.) and schedules for conditioned spaces shall also be used for ~~All Minimum Loads Capabilities~~

~~found in this manual apply to~~ indirectly conditioned spaces. ~~-~~When indirectly conditioned spaces are explicitly modeled, ACMs ~~must~~shall require the user to identify~~ing~~ each zone as either directly or indirectly conditioned.

At the user's choice, ACMs may model indirectly conditioned spaces as part of the directly conditioned space provided that the total volume and area of indirectly conditioned spaces included are each less than 15% of the total volume and less than 15% of the total conditioned floor area of the total indirectly and directly conditioned volume and floor area. (Refer to Chapter 4 for requirements applying to indirectly conditioned spaces included as directly conditioned spaces.) For the purposes of this manual, indirectly conditioned spaces can either be occupied or unoccupied. Descriptions of each of these space types are provided in Chapter 4. The requirements for each of these three cases are documented below.

Indirectly Conditioned Spaces Included in Directly Conditioned Space

Description	The requirements for modeling indirectly conditioned spaces when they are included in directly conditioned space are as described below.
DOE-2 Command	SPACE
DOE-2 Keyword(s)	AREA VOLUME MULTIPLIER
Input Type	Required
Tradeoffs	Neutral
Modeling Rules for Proposed Design:	Any indirectly conditioned space modeled as part of directly conditioned space shall be input as it occurs in the construction documents, including envelope, occupancy characteristics and lighting levels. Additionally, ACMs ~~must~~shall assume mechanical heating and cooling is provided to the space, using the same system as the actual directly conditioned space.
Modeling Rules for ~~Reference~~Standard Design (All):	ACMs ~~must~~shall use the same configuration and occupancy characteristics for indirectly conditioned spaces modeled as directly conditioned space as the proposed design. Standard design assumptions for envelope performance, occupancy characteristics, lighting levels, and HVAC system assumptions shall be determined as if the space were directly conditioned.

Indirectly Conditioned Spaces that can be Occupied and Explicitly Modeled

Description:	The requirements for modeling indirectly conditioned spaces that can be occupied and explicitly modeled are as described below.
DOE-2 Command	SPACE
DOE-2 Keyword(s)	AREA VOLUME MULTIPLIER
Input Type	Required
Tradeoffs	Neutral
Modeling Rules for Proposed Design:	For the proposed design ACMs shall receive input for indirectly conditioned spaces for area, configuration, and envelope as each space occurs in the construction documents. All internal loads, receptacle, occupant, process loads shall be determined identically to directly conditioned space. The reference method will treat the space as a conditioned zone [ZONE-TYPE = CONDITIONED] with heating and cooling off [HEATING-SCHEDULE & COOLING-SCHEDULE set to off] and fans on so that mechanical ventilation will be modeled according to Table N2-2 or Table N2-3.
Modeling Rules for	ACMs ~~must~~shall use the same configuration and modeling assumptions for indirectly

~~Reference~~Standard Design (All):	conditioned spaces that can be occupied as the proposed design. Standard design assumptions for envelope performance shall be determined as if the space were directly conditioned. The reference method will not model mechanical heating or cooling for these spaces, however mechanical ventilation (CFM/ft^2) will be modeled according to Table N2-2 or Table N2-2. Lighting levels shall be established identical to directly conditioned space standard design.

Indirectly Conditioned Spaces that cannot be Occupied and Explicitly Modeled

Description	The requirements for modeling indirectly conditioned spaces that cannot be occupied and explicitly modeled are as described below.
DOE-2 Command	SPACE
DOE-2 Keyword(s)	AREA VOLUME MULTIPLIER
Input Type	Prescribed
Tradeoffs	Neutral
Modeling Rules for Proposed Design:	For the proposed design, all ACMs shall receive input for indirectly conditioned spaces for area, configuration, and envelope as each space occurs in the construction documents. All internal loads, ventilation, receptacle, lighting, occupant and process loads shall be zero. No mechanical heating, cooling or ventilation shall be modeled for indirectly conditioned spaces that cannot be occupied. As in the standard design, for these spaces the reference method models lightweight mass by using a light furniture category of 30 pounds per square foot in DOE 2.1 to generate the lightweight standard weighting factors for these spaces. This lightweight mass is meant to approximate the materials found in conditioned spaces that cannot be occupied.
Modeling Rules for ~~Reference~~Standard Design (All):	ACMs ~~must~~shall use the same configuration and modeling assumptions for indirectly conditioned spaces that cannot be occupied as the proposed design. Standard design assumptions for envelope performance shall be determined as if the space were directly conditioned. For these spaces the reference method models lightweight mass by using a light furniture category of 30 pounds per square foot in DOE 2.1 to generate the lightweight standard weighting factors for these spaces. This lightweight mass is meant to approximate the materials found in indirectly conditioned spaces that cannot be occupied. The reference method will not model mechanical heating, cooling or ventilation for indirectly conditioned spaces that cannot be occupied.

1.3.1.4 Enclosed Unconditioned ~~and Semi-Conditioned Spaces~~

Description:	ACMs shall require the user to explicitly model any enclosed unconditioned ~~and semi-conditioned~~ spaces such as stairways, warehouses, unoccupied adjacent tenant spaces, attached sunspaces, attics and crawl spaces if and only if they are part of the permitted space. ACMs ~~must~~shall require the user to identify the space as unconditioned and to enter all applicable envelope information, in a similar manner to a conditioned space. ~~In this manual, the word "unconditioned" is used to refer to both unconditioned and semi-conditioned spaces.~~ If the enclosed unconditioned space is not a part of the permitted space, ACMs may allow the user to either explicitly model the space or ignore it by modeling the partition separating the condition space from the enclosed unconditioned space as an adiabatic

	demising partition (see Section 2.~~2~~3.2.5).
DOE-2 Command	SPACE
DOE-2 Keyword(s)	AREA VOLUME MULTIPLIER
Input Type	Required
Tradeoffs	Neutral
Modeling Rules for Proposed Design:	If enclosed unconditioned spaces are explicitly modeled, ACMs shall model the envelope characteristics of the unconditioned spaces as input by the user, according to the plans and specifications for the building. All internal gains and operational loads (occupants, water heating, receptacle, lighting and process loads, ventilation) in unconditioned spaces shall be equal to zero. Infiltration shall be equal to 0.038 times the total wall area exposed to ambient outdoor air. If enclosed unconditioned spaces are not modeled, the reference program shall model the partitions separating condition spaces from enclosed unconditioned spaces as adiabatic demising partitions.
Modeling Rules for ~~Reference~~Standard Design (All):	ACMs shall model unconditioned spaces exactly the same as the proposed design.

~~1.4.1.4~~2.2.2.11 Concrete Slab Floors on Grade

~~Description:~~	~~Slab-on-grade floor construction typically consisting of 3-1/2 inch thick poured concrete on grade.~~
~~DOE-2 Command~~	~~UNDERGROUND-FLOOR~~
~~DOE-2 Keyword(s)~~	~~WIDTH~~ ~~HEIGHT~~ ~~MULTIPLIER~~
~~Input Type~~	~~Prescribed~~
~~Tradeoffs~~	~~Neutral~~
~~Modeling Rules for Proposed Design:~~	~~The reference method shall model concrete slab floors on grade with a construction consisting of concrete whose thickness must be input by the user and one foot of earth. ACMs shall model an effective U-factor of (0) for slab-on-grade floors.~~ ~~The reference method assumes soil layers to have a thermal conductivity of 0.50 Btu-ft/h-ft^2-°F and a density of 85 lb/ft^3. Concrete is assumed to have a thermal conductivity of 0.7576 Btu-ft/h-ft^2-°F and a density of 140 lb/ft^3. The reference method assumes that both soil and concrete have a specific heat of 0.20 Btu/lb-°F.~~
~~Modeling Rules for Reference Design (All):~~	~~ACMs shall use the same slab floor constructions and areas as the proposed design.~~

1.3.1.5 ~~Light~~ Interior Mass

Description:	The heat capacity of interior walls and furniture~~ are modeled as lightweight mass~~.
DOE-2 Command	SPACE
DOE-2 Keyword(s)	FURNITURE-TYPE

	FURN-WEIGHT FURN-FRACTION
Input Type	Prescribed
Tradeoffs	Neutral
Modeling Rules for Proposed Design:	ACMs shall model ~~lightweight~~ interior mass ~~with constructions~~ as specified below. ~~ACMs shall not have direct user inputs for interior light weight mass.~~ The reference method determines lightweight mass exclusively as a function of floor area using DOE-2 furniture inputs as described below. The reference method assumes that lightweight mass is determined from the floor area of the modeled spaces. In the reference method, lightweight mass is modeled through the use of the DOE 2.1 furniture inputs. For directly conditioned spaces and indirectly conditioned spaces that can be occupied the internal mass category is deemed to be [FURNITURE-TYPE = HEAVY]; the average weight of the light mass (furniture and equipment) is assumed to be 80 pounds per square foot [FURN-WEIGHT = 80]; and 85% of the floor is covered by lightweight (furniture) mass [FURN-FRACTION = 0.85]. This furniture fraction determines the fraction of solar gains going to the furniture/light mass. Thus the reference method assigns 85% of the total solar heat gain normally falling on the floor to the furniture instead. For indirectly conditioned spaces that cannot be occupied the internal mass category is deemed to be [FURNITURE-TYPE = LIGHT]; the average weight of the light mass (furniture and equipment) is assumed to be 30 pounds per square foot [FURN-WEIGHT = 30]; and 85% of the floor is covered by lightweight (furniture) mass [FURN-FRACTION = 0.85].
Modeling Rules for ~~Reference~~Standard Design (All):	The standard design shall model the same lightweight mass as the proposed design.

~~2.2.1~~1.3.2 Construction Assemblies

Construction assemblies for the proposed design shall be selected from ACM Joint Appendix IV. When a choice is made, all properties of the proposed design construction assembly are set. The materials and layers that make up the construction assemblies are documented in the notes section of each table in ACM Joint Appendix IV. The choice from ACM Joint Appendix IV also determines the construction of the standard design, according to the mappings in Table N2-1.

Table N2-1 is first organized by type of construction: wall, roof or floor. The second column is the tables from ACM Joint Appendix IV for each type of construction. The third column links the tables to a class of construction. The final columns show the standard design construction assembly for each climate and building type. ***Selections from ACM Joint Appendix IV are referenced by row and column, similar to a spreadsheet. Letters are used for columns and numbers for rows.***

For mass walls, the process of choosing from ACM Joint Appendix IV is a bit more complicated. The user first chooses the mass layer from either Table IV-12 or Table IV-13. After that, the user may select an insulating layer from Table IV-14 for the outside of the mass wall and/or the inside of the mass wall. Up to three choices may be selected from ACM Joint Appendix IV. The mass layer selected by the user determines if the wall is medium mass or heavy mass. If the selected mass layer has an HC greater than or equal to 15.0 Btu/ft²-ºF, then the standard design mass layer is IV12-A8. If the selected mass layer has an HC greater than or equal to 7.0 Btu/ft²-ºF, but less than 15.0 Btu/ft²-ºF, then the standard design mass layer is IV12-B8. Table N2-1 shows the insulating layer from Table IV-14 that is added to the inside of the standard design mass layer.

Example

A user chooses the IV11-E3 steel framed wall construction from Table IV-11 of ACM Joint Appendix IV for a nonresidential building located in climate zone 12. Anytime a proposed design construction assembly is selected from Table IV-11, the class of construction for the proposed design is metal framing. The standard design construction assembly is IV11-A3 from Table N2-1.

Table N2-1 – Standard Design Construction Assemblies From ACM Joint Appendix IV

			Standard Design Construction Assembly			
Type	ACM Joint Appendix IV Table	Class	Climate Zone	Non-residential	High Rise Residential and Hotel/Motel Guestrooms	Relocatable Classrooms
Walls	Table IV.11 – Metal Framed Walls	Metal framing	1, 16	IV11-A3	IV11-A5	IV11-A3
			3-5	IV11-A2	IV11-A2	
			6-9	IV11-A2	IV11-A2	
			2, 10-13	IV11-A3	IV11-A3	
			14, 15	IV11-B5	IV11-A3	
	Table IV.16 ~~15~~ – Metal Building Walls	Metal building	1, 16	IV16~~15~~-A4	IV16~~15~~-A5	IV16~~15~~-A5
			3-5	IV16~~15~~-A3	IV16~~15~~-A3	
			6-9	IV16~~15~~-A3	IV16~~15~~-A3	
			2, 10-13	IV16~~15~~-A4	IV16~~15~~-A4	
			14, 15	IV16~~15~~-A4	IV16~~15~~-A4	
	Table IV.12 – Hollow Unit Masonry Walls Table IV.13 – Solid Unit Masonry and Solid Concrete Walls Table IV.19~~14~~ – Effective R-values for Interior or Exterior Insulation Layers ~~Added to Structural Mass Walls~~	Med. mass (For CZ 1, 16, the mass layer from IV13 is combined with furring from IV19~~14~~.) ~~(F)~~	1, 16	IV13-B5 IV19~~14~~-D9	IV13-B5 IV19~~14~~-D9	IV13-B5 IV19~~14~~-D9
			3-5	IV12-C10	IV12-C10	
			6-9	IV12-C10	IV12-C10	
			2, 10-13	IV12-C10	IV12-C10	
			14, 15	IV12-C10	IV12-C10	
	Table IV.12 – Properties of Hollow Unit Masonry Walls Table IV.13 – Properties of Solid Unit Masonry and Solid Concrete Walls Table IV.19~~14~~ – Effective R-values for Interior or Exterior Insulation Layers ~~Added to Structural Mass Walls~~	Heavy mass (For CZ 1, 16, the mass layer from IV12 is combined with furring from IV19~~14~~.)	1, 16	IV12-A9 IV19~~14~~-A6	IV12-A9 IV19~~14~~-A6	n.a.
			3-5	IV12-A9	IV12-A9	
			6-9	IV12-A10	IV12-A10	
			2, 10-13	IV12-A9	IV12-A9	
			14, 15	IV12-C9	IV12-C9	
	Table IV.9 – Wood Framed Walls Table IV.10 –Structurally Insulated Wall Panels (SIPS) Table IV.17~~16~~ – Thermal Properties of Log Home Walls Table IV.18~~17~~ – Thermal and Mass Properties of Straw Bale Walls	Wood framing and Other	1, 16	IV9-A3	IV9-A5	IV9-A3
			3-5	IV9-A2	IV9-A2	
			6-9	IV9-A2	IV9-A2	
			2, 10-13	IV9-A3	IV9-A3	
			14, 15	IV9-A3	IV9-A3	
Roofs	Table IV.1 – Wood Framed Attic Roofs ~~(Standard Framing)~~ Table IV.2 – Wood Framed Rafter Roofs ~~(Advanced Framing)~~ ~~Table IV.3 – Wood Framed Rafter Roofs~~ Table IV.3~~4~~ – Structurally Insulated Panels (SIPS) Roof/Ceilings Table IV.5 – Metal Framed Rafter Roofs Table IV.6 – Span Deck and Concrete Roofs ~~Metal Framed Roofs with Attics~~ Table IV.7 – ~~Standard~~ U-factors for Metal Building Roofs Table IV.8 – ~~Suspended~~ Insulated Ceiling with Removable ~~Ceiling~~ Panels	All	1, 16	IV2~~3~~-A5	IV2~~3~~-A9	IV2~~3~~-A5
			3-5	IV2~~3~~-A5	IV2~~3~~-A5	
			6-9	IV2~~3~~-A2	IV2~~3~~-A5	
			2, 10-13	IV2~~3~~-A5	IV2~~3~~-A9	
			14, 15	IV2~~3~~-A5	IV2~~3~~-A9	
Floors	Table IV.25~~23~~ – Concrete Raised Floors	Medium or heavy mass	1, 16	IV25~~23~~-A5	IV25~~23~~-A5	IV21~~19~~-A4

Type	ACM Joint Appendix IV Table	Class	Standard Design Construction Assembly			
			Climate Zone	Non-residential	High Rise Residential and Hotel/Motel Guestrooms	Relocatable Classrooms
			3-5	IV.25~~23~~-A3	IV.25~~23~~-A3	
			6-9	IV.25~~23~~-A3	IV.25~~23~~-A3	
			2, 10-13	IV.25~~23~~-A5	IV.25~~23~~-A5	
			14, 15	IV.25~~23~~-A3	IV.25~~23~~-A5	
	Table IV.20~~18~~ – Wood-Framed Floors with a Crawl Space Table IV.21~~19~~ – Wood Framed Floors without a Crawl Space Table IV.22~~20~~ – Wood Foam Panel (SIP) Floors Table IV.23~~21~~ – Metal-Framed Floors with a Crawl Space Table IV.24~~22~~ – Metal-Framed Floors without a Crawl Space	Other	1, 16	IV.21~~19~~-A4	IV.21~~19~~-A4	
			3-5	IV.21~~19~~-A2	IV.21~~19~~-A2	
			6-9	IV.21~~19~~-A2	IV.21~~19~~-A2	IV.21~~19~~-A4
			2, 10-13	IV.21~~19~~-A2	IV.21~~19~~-A2	
			14, 15	IV.21~~19~~-A2	IV.21~~19~~-A2	

1.3.2.1 Construction Identifiers

~~*Description:*~~

All constructions are selected from ACM Joint Appendix IV. Each construction is referenced by the table number and the column and row in the table.

1.3.2.2 Heat Capacity

Description

The ability of a construction assembly to absorb thermal energy. The heat capacity, HC, of an assembly is calculated by using the following equation:

Equation N2~~.2.~~-1~~1~~

$$HC = \sum_{i=1}^{n} (\rho_i \times c_i \times t_i)$$

where:

n is the total number of layers in the assembly

ρ_i is the density of the ith layer

C_i is the specific heat of the ith layer

t_i is the thickness of the ith layer

all in consistent units.

HC is not an input to the reference program, nor is it used in the calculations. It is used, however to determine if a wall is medium mass or heavy mass or if a floor is medium or heavy mass. HC is reported in ACM Joint Appendix IV for wall construction assemblies, so it is generally not necessary to use the above equation to calculate HC. ~~For framed assemblies where the insulation layer also includes framing members, ACMs must calculate the heat capacity of the framing/insulation layer~~

	~~based on weighted average density and specific heat of the framing and insulation.~~
DOE-2 Commands	LAYERS, MATERIAL
DOE-2 Keyword(s)	DENSITY SPECIFIC-HEAT THICKNESS
Input Type	HC is determined by the construction assembly choices for the proposed design. Each mass wall choice from ACM Joint Appendix IV has an HC value associated with it. ~~Required.~~
Tradeoffs	Neutral
Modeling Rules for Proposed Design	The ACM shall determine ~~calculate~~ the overall heat capacity from the users choice of a construction assembly from ACM Joint Appendix IV. ~~according to the above formula using the layers as they occur in the construction documents. Alternatively, ACMs may require an explicit input for the assembly's overall heat capacity.~~
~~User Input:~~	~~Yes, or may be calculated by the program according to the above formula.~~
~~Low Caution:~~	~~ACMs must output a warning note on the ENV-1 form if the user specified or calculated overall HC is less than 0.6 Btu/ft^2-°F.~~
Modeling Rules for ~~Reference~~Standard Design (All):	The construction assembly specified in Table N2-1 shall be used for the standard design. ~~ACMs shall determine standard design assemblies from the overall heat capacity of the proposed construction assembly. The heat capacity of the reference construction assembly shall be the same as the heat capacity of the proposed assembly.~~

~~*1.4.2.32.2.1.3 Construction Types*~~

~~Exterior walls have the following five construction types: (1) wood framing; (2) steel framing; (3) medium-mass masonry with 7.0≤HC<15.0 Btu/ft^2-°F; (4) heavy-mass masonry with HC≥15.0 Btu/ft^2-°F; (5) other; and (6) composite. Exterior floors and soffits have the following two construction types: (1) light-mass with HC<7.0 Btu/ft^2-°F; and (2) medium or heavy-mass with HC≥7.0 Btu/ft^2-°F. All exterior roofs and ceilings are of the same type.~~

1.3.2.3 ~~2.2.1.4 Absorptance~~Solar Reflectance and Thermal Emittance

Description	The combination of solar reflectance and thermal emittance are the reflective and radiative properties of exterior surfaces. A cool roof, as defined in the Standards, has a minimum initial solar reflectance of 0.70 and minimum initial emittance of 0.75, but with the performance method any combination of reflectance and emittance is recognized for credit or penalty. • Absorptance is t~~T~~he fraction of the incident solar radiation absorbed as heat on the construction assembly's opaque exterior surface. • Reflectance is the fraction of incident solar radiation that is reflected. Reflectance plus absorptance equal one. • Thermal emittance is the ratio of radiant heat flux emitted by the construction assembly's opaque exterior surface to that emitted by a blackbody at the same temperature, hereafter referred to as "emittance."
DOE-2 Commands and Keywords	CONSTRUCTION ABSORPTANCE .. EXTERIOR-WALL OUTSIDE-EMISS .. Note that absorptance is equal to 1 – reflectance. The reference method accepts absorptance, but not reflectance.
Input Type	Required for roofs. Default for other surfaces. ~~Default~~

Tradeoffs

Yes for roofs. No for other surfaces~~Yes~~

Modeling Rules for Proposed Design:

The reference method shall use an aged absorptance value to model the proposed design roof. The ACM shall calculate the aged absorptance, α_{aged}, from the following equation:

Equation N2-2 $$\alpha_{aged} = 0.8 + 0.7\ (\alpha_{init} - 0.8)$$

where α_{init} is the initial absorptance of the roofing product. The aged emittance shall be equal to the initial emittance.

There are two compliance cases, one for nonresidential roofs with low-slopes and the second for other nonresidential roofs, high-rise residential and hotel/motel roofs.

If values for reflectance or emittance other than the defaults are used, the roofing material shall be rated by the CRRC. If a non-default reflectance is used, then the default emittance may not be used.

Non-residential low-slope roofs - continuance variation of absorptance and emittance may be entered if the roofing product is rated by the CRRC and for liquid applied coatings if the requirements in Section 118 (i) 3 are met. The default value for roofs that are not rated by the CRRC or do not meet the requirements of Section 118 (i) 3 is 0.9 initial absorptance and 0.75 emittance for non-metallic surfaces and 0.20 for metallic surfaces, including but not limited to bare metal, galvanized steel and aluminum coating.

Other nonresidential roofs, high-rise residential and hotel/motel roofs - roofs that meet the requirements of Section 118 (i) 3 qualify for a compliance credit. Qualifying cool roofs shall model an initial absorptance of 0.30. Nonqualifying roofs shall use a default absorptance of 0.7. The default value for roofs that are not rated by the CRRC or do not meet the requirements of Section 118 (i) 3 is 0.75 emittance for non-metallic surfaces and 0.20 for metallic surfaces, including but not limited to bare metal, galvanized steel and aluminum coating.

~~For roofs, qualifying cool roofs shall model an absorptance of 0.45. All other roofs shall use the default value.~~

~~For other opaque surfaces, the ACM must either receive user input for the absorptance of each opaque exterior surface or use the default value.~~

~~Cool Roof Value:~~

~~Roof = 0.45~~

~~To qualify as a cool roof the roof must meet the requirements of Section 118 of the Standard, which states:~~

~~(a) Effective January 1, 2003, a roof shall be considered a cool roof if the roof is certified and labeled according to requirements of Section 10-113 and if the roof meets conditions (1) or (2) below. Prior to January 1, 2003, manufacturer's published performance data shall be acceptable to show compliance with one of the following conditions.~~

~~(1) Roof of concrete tile (per ASTM C55-99) and clay tile (per ASTM C1167-96) require a minimum initial total solar reflectance of 0.40 when tested in accordance with ASTM E903 or E1918, and a minimum thermal emittance of 0.75 when tested in accordance with ASTM E408.~~

~~(2) All other roofs require a minimum initial total solar reflectance of 0.70 when tested in accordance with ASTM E903 or E1918, and a minimum~~

~~thermal emittance of 0.75 when tested in accordance with ASTM E408.~~

~~(3) Liquid applied roofing products shall be applied at a minimum dry mil thickness of 20 mils across the entire roof surface, and meet the minimum performance requirements of ASTM D6083-97 when tested in accordance with ASTM D6083?97 for the following key properties:~~

~~* Initial Tensile Strength~~

~~* Initial Elongation~~

~~* Elongation After 1000 Hours Accelerated Weathering~~

~~* Permeance~~

~~* Accelerated Weathering~~

The default values below shall be used for walls and floors and shall be the same as for the standard design.

Default — The default initial reflectance is 0.10 for nonresidential buildings with a low-slope roof and 0.30 for other roofs, including all high rise residential and hotel/motel guest rooms. The default emittance is 0.75. This default may not be used if a non-default reflectance is used.

~~Low Value:~~ ~~Exterior wall = 0.20~~

~~Demising wall = 0.02~~

~~High Value:~~ ~~Exterior wall = 0.90~~

~~Demising wall = 0.80~~

~~Cool Roof Caution~~ ~~Warning on PERF-1 if a cool roof credit is claimed.~~

~~Low Caution:~~ ~~Warning on PERF-1 that the absorptance of an exterior wall is less than 0.50.~~

Modeling Rules for ~~Reference~~Standard Design (All): The reference method shall use an aged absorptance value to model the standard design.

Nonresidential low-sloped roofs - the initial roof absorptance of the standard design shall be 0.30 (initial reflectance of 0.70). The emittance in the standard design shall be 0.75.

Other nonresidential roofs, high-rise residential and hotel/motel roofs - the initial roof absorptance of the standard design shall be 0.70. The emittance in the standard design shall be 0.75.

For all other roofs as well as walls and floors, the default reflectance and emittance shall be used.

~~For the reference method, the roof absorptance shall be modeled at 0.70. The absorptance of each other opaque exterior surface is the same as the proposed design.~~

~~2.2.1.5 Surface Emissivity~~

~~Description:~~ ~~The ratio of radiation intensity from the construction assembly's opaque exterior surface to the radiation intensity at the same wavelength from a blackbody at the same temperature.~~

~~DOE-2 Command~~ ~~EXTERIOR-WALL~~

~~DOE-2 Keyword(s)~~	~~OUTSIDE-EMISS~~
~~Input Type~~	~~Prescribed~~
~~Tradeoffs~~	~~Neutral~~
~~Modeling Rules for Proposed Design:~~	~~The proposed design shall model a surface emissivity of 0.90.~~
~~Modeling Rules for Reference Design (All):~~	~~The surface emissivity of the reference design shall be the same as the surface emissivity of the proposed design.~~
~~2.2.1.6 Wood Frame~~	
~~Description~~	~~A construction assembly that consists of wood framing members, insulation or air in the cavity between the framing members with exterior and interior finish.~~
~~DOE-2 Command~~	~~EXTERIOR-WALL~~
~~DOE-2 Keyword(s)~~	~~LAYERS~~
~~Input Type~~	~~Required~~
~~Tradeoffs~~	~~Yes~~
~~Modeling Rules for Proposed Design:~~	~~Wood-framed assemblies consist of a framing section and a cavity section. ACMs shall calculate the overall R-value of the assembly using ASHRAE Parallel Path method and the following framing percentages:~~ ~~Walls: Framing percentages for frame spacing of 16" O.C., 24" O.C., and 48" O.C. are 15%, 12%, and 8% respectively.~~ ~~Floors/soffits and roofs/ceilings: The framing percentage for frame spacing of 16" O.C. and 24" O.C. are 10% and 7% respectively.~~ ~~Using the above calculated overall R-value, ACMs shall determine the equivalent cavity insulation/framing R-value that would result in the same overall R-value for the assembly when all assembly layers including the insulation/framing layer are added as a series of homogeneous layers. The heat capacity of the cavity insulation/framing shall be the volume weighted average of the cavity insulation and the framing.~~
~~Modeling Rules for Reference Design (New & Altered Existing):~~	~~The standard design wall and floor/soffit assemblies are dependent on the HC of the proposed assembly. For wall, floor/soffit, and roof/ceiling assemblies, an ACM must require the user to enter values needed to determine heat capacity, HC, for the proposed design and use it to determine the standard design U-factor.~~ ~~ACMs must model standard design wall assemblies using the same wood frame construction, layers, and modeling technique as the proposed wall assembly. An ACM shall adjust the cavity insulation in order for the overall U-factor of the standard assembly to match the U-factor requirement listed in Table 1-H or 1-I of the Standards for wood-framed walls and the applicable climate zone.~~ ~~ACMs must model standard design floor/soffit assemblies using the same wood frame construction, layers, and modeling technique as the proposed floor/soffit assembly. An ACM shall adjust the cavity insulation in order for the overall U-factor of the standard assembly to match the U-factor requirement listed in Table 1-H or 1-I of the Standards for "other" and the applicable climate zone.~~ ~~ACMs must model standard design roof/ceiling assemblies using the same wood frame construction, layers, and modeling technique as the proposed roof/ceiling~~

	~~assembly. An ACM shall adjust the cavity insulation in order for the overall U-factor of the standard assembly to match the U-factor requirement listed in Table 1-H or 1-I of the Standards and the applicable climate zone.~~
~~Modeling Rules for Reference Design (Existing Unchanged):~~	~~The standard design shall model each existing wood-framed assembly as they occur in the existing building using the same procedure as described above.~~
~~2.2.1.7 Steel Frame~~	
~~Description:~~	~~A construction assembly that consists of steel framing members, insulation or air in the cavity between the framing members with interior and exterior finish.~~
~~DOE-2 Command~~	~~EXTERIOR-WALL~~
~~DOE-2 Keyword(s)~~	~~LAYERS~~
~~Input Type~~	~~Required~~
~~Tradeoffs~~	~~Yes~~
~~Modeling Rules for Proposed Design:~~	~~Steel-framed assemblies consist of a framing section and a cavity section. ACMs shall calculate the overall R-value of the assembly using ASHRAE Zone Method and the following framing percentages:~~ ~~Walls: Framing percentages for frame spacing of 16" O.C., 24" O.C., and 48" O.C. are 15%, 12%, and 8% respectively.~~ ~~Floors/soffits and roofs/ceilings: The framing percentage for frame spacing of 16" O.C. and 24" O.C. are 10% and 7% respectively.~~ ~~The calculated overall R-value of the assembly shall be within 10 percent of the overall R-value calculated by the EZFRAME program.~~ ~~Using the above calculated overall R-value, ACMs shall determine the equivalent cavity insulation/framing R-value that would result in the same overall R-value for the assembly when all assembly layers including the insulation/framing layer are added as a series of homogeneous layers. The heat capacity of the cavity insulation/framing shall be the volume weighted average of the cavity insulation and the framing.~~
~~Modeling Rules for Reference Design (New & Altered Existing):~~	~~The standard design wall and floor/soffit assemblies are dependent on the HC of the proposed assembly. For wall, floor/soffit, and roof/ceiling assemblies, an ACM must require the user to enter values needed to determine heat capacity, HC, for the proposed design and use that same value of heat capacity for the standard design.~~ ~~ACMs must model standard design wall assemblies using the same steel frame construction, layers, and modeling technique as the proposed wall assembly. An ACM shall adjust the cavity insulation in order for the overall U-factor of the standard assembly to match the U-factor requirement listed in Table 1-H or 1-I of the Standards for steel-framed walls and the applicable climate zone.~~ ~~ACMs must model standard design floor/soffit assemblies using the same steel frame construction, layers, and modeling technique as the proposed floor/soffit assembly. An ACM shall adjust the cavity insulation in order for the overall U-factor of the standard assembly to match the U-factor requirement listed in Table 1-H or 1-I of the Standards for "other" and the applicable climate zone.~~ ~~ACMs must model standard design roof/ceiling assemblies using the same steel frame construction, layers, and modeling technique as the proposed roof/ceiling assembly. An ACM shall adjust the cavity insulation in order for the overall U-factor of the standard assembly to match the U-factor requirement listed in Table 1-H or 1-I of the Standards and the applicable climate zone.~~

~~Modeling Rules for Reference Design (Existing Unchanged):~~	~~The standard design shall model each existing steel-framed assembly as they occur in the existing building using the same procedure as described above.~~

~~2.2.1.8 Masonry~~

~~Description:~~	~~A construction assembly that consists of masonry materials such as poured concrete, solid brick, fully grouted masonry units, or perlite filled hollow concrete masonry blocks.~~
~~DOE-2 Command~~	~~EXTERIOR-WALL~~
~~DOE-2 Keyword(s)~~	~~LAYERS~~
~~Input Type~~	~~Required~~
~~Tradeoffs~~	~~Yes~~
~~Modeling Rules for Proposed Design:~~	~~The ACM shall model masonry assemblies as a single construction using ASHRAE Table 4 in ASHRAE Handbook, 1997, Fundamentals Volume, Chapter 24.~~
~~Modeling Rules for Reference Design (New & Altered Existing):~~	~~The standard design wall and floor/soffit assemblies are dependent on the HC of the proposed assembly. For wall, floor/soffit, and roof/ceiling assemblies, an ACM must require the user to enter values needed to determine heat capacity, HC, for the proposed design and use that same value of heat capacity for the standard design.~~ ~~ACMs must determine the standard design wall assemblies using homogeneous masonry material with a U-factor matching the requirement listed in Table 1-H or 1-I of the Standards for the applicable HC range and the climate zone.~~ ~~ACMs must determine the standard design raised floor/soffit assemblies using homogeneous masonry material with a U-factor matching the requirement listed in Table 1-H or 1-I of the Standards for HC and the applicable climate zone. For high-rise residential buildings and guest rooms of hotel/motel buildings ACMs must adjust the listed U-factor for raised floor/soffit assemblies for climate zones that require insulation as indicated in Table 1-I.~~ ~~ACMs must determine the standard design roof/ceiling assemblies using homogeneous masonry material with a U-factor matching the requirement listed in Table 1-H or 1-I of the Standards and the applicable climate zone.~~
~~Modeling Rules for Reference Design (Existing Unchanged):~~	~~The standard design shall model each existing masonry assembly as they occur in the existing building using the same procedure as described above.~~

1.3.2.4 Composite Walls

Description	Exterior wall assemblies that consist of more than one class of construction, i.e. any combination of wood framing, steel framing, masonry, and other types of wall construction assemblies. An example of a composite wall made up of a masonry section and a steel-framed section is shown below:

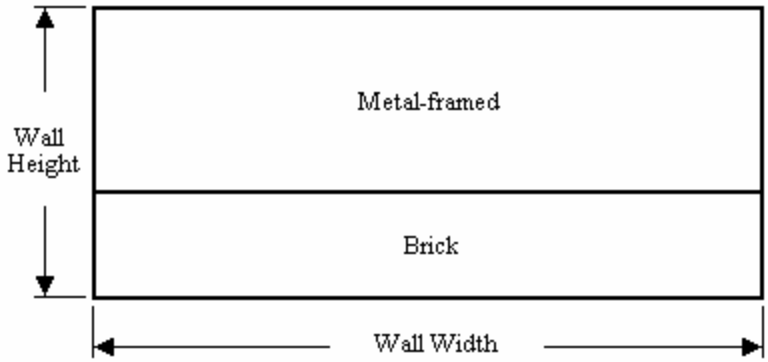

DOE-2 Command	EXTERIOR-WALL
DOE-2 Keyword(s)	LAYERS
Input Type	Required
Tradeoffs	Yes
Modeling Rules for Proposed Design:	The ACM shall model each type of construction in a composite wall shown in the construction documents as described above. The composite wall shall consist of multiple selections from ACM Joint Appendix IV, with each assigned an area.
Modeling Rules for ~~Reference~~Standard Design (New & Altered Existing):	Each part of the composite wall has a standard design construction which is defined in Table N2-1. ~~For each construction type of the composite wall ACMs shall use the applicable technique to model the standard design. The U-factor of each type must match the applicable requirements of Table 1-H or 1-I of the Standards for the applicable HC range and the climate zone.~~
Modeling Rules for ~~Reference~~Standard Design (Existing Unchanged):	The standard design shall model each existing composite wall as it occurs in the existing building using the procedure described above. The existing construction assemblies shall be selected from ACM Joint Appendix IV.

~~2.2.2~~1.3.3 Above-Grade Opaque Envelope

1.3.3.1 Exterior Partitions

Description:	Above-grade exterior partitions that separate conditioned spaces from the ambient air (outdoors), unconditioned attic spaces and crawl spaces, or courtyards~~, or unconditioned spaces that are not enclosed~~. Exterior walls, raised floors, roofs, and ceilings are exterior partitions. The area of exterior partitions is defined by specifying the width of the partition and a height equal to the total height of the floor or by using another acceptable means such as specifying the vertices of a polygon.
DOE-2 Command	EXTERIOR-WALL
DOE-2 Keyword(s)	HEIGHT, WIDTH
Input Type	Required
Tradeoffs	Neutral
Modeling Rules for Proposed Design:	~~For e~~Each exterior partition ~~of each floor, ACMs shall receive inputs for the height and width as they~~ shall be entered as it occurs in the construction documents.

Modeling Rules for ~~Reference~~Standard Design (All):	Exterior partitions in t~~T~~he standard design shall ~~model each exterior partition with the same height and width as~~ be identical to the proposed design.

1.3.3.2 Insulation Above Suspended Ceilings

Description	Section 118(e)3. of the Standard restricts the use of insulation over suspended ceilings. This is permitted only when the unconditioned space above the ceiling is greater than 12 ft and the insulted space shall be smaller than 2,000 ft².
Proposed Design	The proposed design may only use insulation over a suspended when the space qualifies for the exception to 118(e)3. The U-factor for the construction shall be selected from Table IV.8 from ACM Joint Appendix IV. Values from this table account for leakage through the suspended ceiling and discontinuity of the insulation.
Standard Design	The standard design roof construction shall be determined from Table N2-1, based on climate zone and class of construction. .

1.3.3.3 Surface Azimuth and Tilt of Exterior Partitions

Description:	The direction of an outward normal projecting from the partition's exterior surface relative to the true north. Positive azimuth is measured clockwise from the true north. Note: openings (doors and windows) inherit their azimuth and tilt from the parent surface.
DOE-2 Command	EXTERIOR-WALL
DOE-2 Keyword(s)	AZIMUTH TILT
Input Type	Required
Tradeoffs	Neutral
Modeling Rules for Proposed Design:	The a~~A~~zimuth and tilt of each exterior partition shall be input as shown in the construction documents for the building to the nearest whole degree.
Modeling Rules for ~~Reference~~Standard Design (All):	The azimuth and tilt of ~~each~~ exterior partitions in the standard design shall be identical to those ~~shall be modeled in the same manner as it occurs and is modeled~~ in the proposed design.

~~2.2.2.3 Surface Tilt of Exterior Partitions~~

~~Description:~~	~~Inclination of a partition's exterior surface from horizontal.~~
~~DOE-2 Command~~	~~EXTERIOR-WALL~~
~~DOE-2 Keyword(s)~~	~~TILT~~
~~Input Type~~	~~Required~~
~~Tradeoffs~~	~~Neutral~~
~~Modeling Rules for Proposed Design:~~	~~The tilt of each exterior surface shall be input as shown in the construction documents for the building to the nearest whole degree.~~
~~Modeling Rules for Reference Design (All):~~	~~The tilt of each exterior surface shall be modeled in the same manner as it occurs and is modeled in the proposed design.~~

~~*1.4.3.32.2.2.4 Construction of Exterior Partitions*~~

~~The construction assembly describing the exterior partition. The modeling rules are described in Section 2.2.1 Construction Assemblies.~~

1.3.4 Interior Surfaces

1.3.4.1 Demising Partitions

Description	A barrier that separates a conditioned space from an enclosed unconditioned space. "Party walls" separating tenants, a partition separating a conditioned space from an unconditioned warehouse, and a glass partition separating a conditioned space from an unconditioned sunspace are examples of demising partitions.
DOE-2 Command	INTERIOR-WALL
DOE-2 Keyword(s)	HEIGHT WIDTH AZIMUTH TILT NEXT-TO
Input Type	Required
Tradeoffs	Neutral
Modeling Rules for Proposed Design:	The ~~reference~~ proposed design shall model demising partitions as adiabatic interior partitions. No heat transfer shall occur between the two adjacent spaces. ACMs ~~must~~shall require the user to input information for each demising partition including orientation and tilt, location, size, shape and construction as they occur in the construction documents. ~~Window Management shall not be modeled for fenestration products separating conditioned and enclosed unconditioned spaces.~~ ACMs shall indicate in the compliance forms that demising partitions are used to separate the conditioned space from the unconditioned space. For framed demising partitions in a new construction, the compliance forms shall also indicate that R-11 insulation ~~must~~shall be installed.
Modeling Rules for ~~Reference~~Standard Design (All):	The standard design shall model each demising partition with the same thermal characteristics, orientation and tilt, location, size, shape and construction as the proposed design.

1.3.4.2 Interzone Walls

Description:	The reference method shall model heat transfer through interior walls separating directly conditioned zones from other directly and indirectly conditioned zones as air walls. The reference program accounts for the thermal mass of interior walls as described in Section 2.3.1.5~~2.3.2.13~~.
DOE-2 Command	INTERIOR-WALL
DOE-2 Keyword(s)	WIDTH HEIGHT NEXT-TO
Input Type	Prescribed
Tradeoffs	Neutral
Modeling Rules for Proposed Design	ACMs shall receive inputs for the width and height (or area) of all interzone walls as they occur in the construction documents. The reference program shall model interzone walls as air walls with zero ~~(0)~~ heat capacity and an overall U-factor of 1.0

	Btu/h-ft^2-^{o}F.
Modeling Rules for ~~Reference~~Standard Design (All):	The reference method models all interzone walls as they occur (and as they are modeled) in the proposed design.

1.3.4.3 ~~:~~ Interior Floors

Description:	The reference method shall model heat transfer through interior floors separating directly conditioned zones from other directly and indirectly conditioned zones.
DOE-2 Command	INTERIOR-WALL
DOE-2 Keyword(s)	WIDTH HEIGHT NEXT-TO
Input Type	Required
Tradeoffs	Neutral
Modeling Rules for Proposed Design:	ACMs shall receive inputs for ~~the~~ all interior floors as they occur in the construction documents.
Modeling Rules for ~~Reference~~Standard Design (All):	The reference method models all interior as they occur (and as they are modeled) in the proposed design.

1.3.5 Fenestration and Doors

1.3.5.1 Area of Fenestration in Walls & Doors

Description: Fenestration surfaces include all glazing in walls and vertical doors of the building. The following inputs ~~must~~shall be received.

- *Fenestration Dimensions*. For each glazing surface, all ACMs ~~must~~shall receive an input for the glazing area. The reference method uses window width and height. The glazing dimensions are those of the rough-out opening for the window(s) or fenestration product. The area of the fenestration product will be the width times the height. For fenestration products with glazing surfaces on more than a single side such as garden windows, the ACM ~~must~~shall be able to accept entry for the dimensions of each side (glazing plus frame) with conditioned space on one side and unconditioned space on the other.
- *Field Fabricated Fenestration.* The area of field-fabricated fenestration cannot exceed 1,000 ft² when the building has more than 10,000 ft² of fenestration; buildings with more than 1,000 ft² do not comply. Also the use of less than 10,000 ft^2 of site-built fenestration in a building with more than 10,000 ft² of fenestration shall be reported in the exceptional conditions checklist.
- *Display Perimeter.* In a secondary menu (subordinate to the menu for fenestration area entries), the ACM ~~must~~shall allow the user to specify a value for the length of display perimeter, in feet, for each floor or story of the building. The user entry for Display Perimeter ~~must~~shall have a default value of ~~(0)~~ zero. Note: Any non-zero input for Display Perimeter is an exceptional condition that ~~must~~shall be reported on the PERF-1 exceptional condition list and ~~must~~shall be reported on the ENV forms. The value for Display Perimeter is used as an alternate means of establishing Maximum Wall Fenestration Area in the standard design (Title 24, §-143). ~~As defined in Section 101(b) of the Standards, d~~Display perimeter is~~:~~ the length of an exterior wall in a B-2 occupancy that immediately abuts a public sidewalk, measured at the sidewalk

level for each story that abuts a public sidewalk.

- *Floor Number.* The ACM ~~must~~shall also allow the user to specify the Display Perimeter associated with each floor (story) of the building.

DOE-2 Command	WINDOW
DOE-2 Keyword(s)	WIDTH HEIGHT
Input Type	Required
Tradeoffs	Yes
Modeling Rules for Proposed Design:	ACMs shall receive inputs for the proposed design fenestration width and height as they are documented on the construction documents.
Modeling Rules for ~~Reference~~Standard Design (New & Altered Existing):	The reference method calculates the maximum allowed fenestration area. This Maximum Wall Fenestration Area is 40% of the gross exterior wall area of the building that is conditioned when display perimeter is not specified. Also, the Maximum Wall Fenestration Area of the west-facing wall is 40% of the gross exterior west-facing wall area of the building that is conditioned when display perimeter is not specified. If Display Perimeter is specified, the Maximum Wall Fenestration Area is either 40% of the gross exterior wall area of the building, or six feet times the Display Perimeter for the building, whichever value is greater. Also, if Display Perimeter is specified, the Maximum Wall Fenestration Area of the west-facing wall is 40% of the gross exterior west-facing wall area of the building, or six feet times the west-facing Display Perimeter for the building, whichever value is greater. The reference method automatically calculates these two maximum fenestration areas for fenestration in walls and uses the greater of the two for the maximum total glazing area and maximum west facing glazing area of the reference building. 1. When the Window Wall Ratio in the proposed design is < 0.40 or < display perimeter × 6 feet, the standard design shall use the same wall fenestration height and width for each glazing surface of the proposed design exterior wall. 2. When the proposed design area of fenestration in walls and doors is greater than the maximum wall fenestration area described above, ACMs shall adjust the height and width of each glazing surface by multiplying them by a fraction equal to the square root of: Maximum Allowed Wall Fenestration Area/Total Proposed Fenestration Area. For the standard design the area of each exterior wall construction shall equal the area of each exterior wall of the proposed design, except when the wall area of the proposed design exceeds the maximum allowable window-to-wall ratio (WWR). There are three cases, when the proposed design glazing exceeds the maximum allowable window-to-wall ratio (WWR), which shall be accounted for: 1. *One Wall Construction*. If the window occurs in a portion of wall where it abuts only one construction, the ACM shall decrease the glazing area to the allowable maximum and increase the area of the wall accordingly. 2. *Multiple Wall Constructions*. If the window occurs in a portion of wall where it abuts more than one construction in a given orientation, the ACM shall increase the area of each adjacent wall construction by the same proportion, as glazing area decreases. 3. *Propose WWR = 1.0.* If the Window-to-Wall Ratio, WWR, for any orientation or exterior surface is 1.0, the ACM shall calculate the area weighted average

(AWA) HC for all of the walls of the proposed design to determine an HC for the hypothetical wall. The glazing amount is reduced and a wall is inserted as follows:

a) AWA HC < 7.0 Btu/ft^2-^{o}F: The standard assembly is a steel-framed, lightweight wall with HC = AWA HC of the proposed walls and with a U-factor matching the requirement listed in Table 143-A, 143-B, or 143-C of the Standards for other walls with HC < 7.0 and the applicable climate zone.

b) AWA HC ≥7.0 Btu/ft^2-^{o}F: The standard assembly is a homogeneous material with a U-factor matching the applicable value listed in Table 143-A, 143-B, or 143-C of the Standards for the applicable HC range and climate zone and the same HC as the proposed AWA HC.

Modeling Rules for ~~Reference~~Standard Design (Existing Unchanged): The standard design shall use the same fenestration area as the existing design.

~~2.2.2.14.4 Window-to-Wall Ratio~~

~~Description:~~ ~~Ratio of the total window area to the gross exterior wall area.~~

~~DOE Keyword:~~ ~~N/A~~

~~Input Type:~~ ~~Calculated based on the dimensions of exterior walls and windows.~~

~~Tradeoffs:~~ ~~Yes~~

~~Modeling Rules for Proposed Design:~~ ~~ACMs shall calculate the window-to-wall ratio based on inputs for width and height of exterior walls and windows as they occur in the construction documents.~~

~~Modeling Rules for Reference Design (New & Altered Existing):~~

~~b) For the standard design the area of each exterior wall construction shall equal the area of each exterior wall of the proposed design, except when the wall area of the proposed design exceeds the maximum allowable window-to-wall ratio (WWR). There are three cases, when the proposed design glazing exceeds the maximum allowable window-to-wall ratio (WWR), which must be accounted for:~~

~~c) 1. *One Wall Construction*. If the window occurs in a portion of wall where it abuts only one construction, the ACM must decrease the glazing area to the allowable maximum and increase the area of the wall accordingly.~~

~~d) 2. *Multiple Wall Constructions*. If the window occurs in a portion of wall where it abuts more than one construction in a given orientation, the ACM must increase the area of each adjacent wall construction by the same proportion, as glazing area decreases.~~

~~e) 3. *Propose WWR = 1.0*. If the Window-to-Wall Ratio, WWR, for any orientation or exterior surface is 1.0, the ACM must calculate the area weighted average (AWA) HC for all of the walls of the proposed design to determine an HC for the hypothetical wall. The glazing amount is reduced and a wall is inserted as follows:~~

~~f)AWA HC < 7.0 Btu/ft^2-^{o}F: The standard assembly is a steel-framed, lightweight wall with HC = AWA HC of the proposed walls and with a U-factor matching the requirement listed in Table 1-H or 1-I of the Standards for other walls with HC < 7.0 and the applicable climate zone.~~

~~a)~~c) ~~AWA HC ≥7.0 Btu/ft^2-^{o}F: The standard assembly is a homogeneous material with a U-factor matching the applicable value listed in Table 1-H or 1-I of the Standards for the applicable HC range and climate zone and the~~

~~same HC as the proposed AWA HC.~~

~~Modeling Rules for Reference Design (Existing Unchanged):~~ ~~The standard design shall use the same window-to-wall ratio as the existing design.~~

1.3.5.2 Area of Fenestration in Exterior Roofs

Description	ACMs ~~must~~shall model the exposed surface area of fenestration in roofs separating those with transparent and translucent glazing. Such fenestration surfaces include all skylights or windows in the roofs including operable skylights and windows in the roofs of the building.
DOE-2 Command	ROOF
DOE-2 Keyword(s)	WIDTH HEIGHT
Input Type	Required
Tradeoffs	Yes
Modeling Rules for Proposed Design:	ACMs shall receive inputs for width, length and height of each fenestration surface of the proposed design as they are shown in the construction documents. Surface area may also be described as vertices of a polygon.
Modeling Rules for ~~Reference~~Standard Design (New & Altered Existing):	ACMs ~~must~~shall calculate the maximum allowed area of fenestration in roofs. This Maximum Roof Fenestration Area is 5% of the gross exterior roof area of the entire permitted space or building. 1. When the Skylight Roof Ratio (SRR) in the proposed design is < 0.05, for each roof fenestration, the standard design shall use the same skylight dimensions as the proposed design. EXCEPTION: When skylights are required by Section 143(c) (low-rise conditioned or unconditioned enclosed spaces that are greater than 25,000 ft^2 directly under a roof with ceiling heights greater than 15 ft and have a lighting power density for general lighting equal to or greater than 0.5 W/ft^2) and the SRR in the proposed design is less than the minimum, the standard design shall have a SRR of 3.0%~~0.03~~ for 0.5 W/ft^2 = LPD < 1.0 W/ft^2, 3.3% for 1.0 W/ft^2 = LPD < 1.4 W/ft^2, and 3.6%~~0.036~~ for LPD = 1.4~~0~~ W/ft^2 in one half of the area of qualifying spaces. 2. When the Skylight Roof Ratio in the proposed design is > 0.05, the ACM shall adjust the dimensions of each roof fenestration of the standard design by multiplying them by a fraction equal to the square root of: Equation N2-3 $SRR_{standard}/SRR_{proposed}$
Modeling Rules for ~~Reference~~Standard Design (Existing Unchanged):	The standard design shall use the same fenestration area as the existing design.

1.3.5.3 Exterior Doors

Description:	Doors in exterior partitions.
DOE-2 Command	DOOR
DOE-2 Keyword(s)	WIDTH

	HEIGHT SETBACK MULTIPLIER
Input Type	Required.
Tradeoffs	Neutral
Modeling Rules for Proposed Design:	Users shall make a selection from ACM Joint Appendix IV. Other inputs shall include ~~ACMs shall receive inputs for each exterior door, including construction, thermal characteristics, orientation and tilt, location and~~ the area ~~for all~~ of each door and its position in the parent surface. Azimuth and tilt are typically inherited from the parent surface. ~~s as they occur in the construction documents.~~
Modeling Rules for ~~Reference~~Standard Design (All):	The reference method shall model the ~~standard~~ exterior doors in a manner identical to ~~design with the same constructions, orientation and tilt, locations and areas as~~ the proposed design.

1.3.5.4 Product Identifiers

Description:	~~Any transparent or translucent material plus any sash, frame, mullions, and dividers, in the envelope of a building, including, but not limited to: windows, sliding glass doors, French doors, skylights, curtain walls, and garden windows.~~ ~~Windows include not only common windows but also all fenestration products in the walls of the building envelope. Examples of such fenestration products include all windows and glazing materials, glass block walls, translucent panels, and glass doors. Walls are portions of the building envelope with tilts from vertical to less than 30 degrees from vertical.~~A unique alphanumeric identifier shall be used for each fenestration product. Separate identifiers shall be used to refer to proposed and standard designs of the same fenestration product. Each product shall be categorized as a manufactured fenestration product, a site-built fenestration product, or a field-fabricated fenestration. Any transparent or translucent material plus any sash, frame, mullions, and dividers, in the envelope of a building, including, but not limited to: windows, sliding glass doors, French doors, skylights, curtain walls, and garden windows. Windows include not only common windows but also all fenestration products in the walls of the building envelope. Examples of such fenestration products include all windows and glazing materials, glass block walls, translucent panels, and glass doors. Walls are portions of the building envelope with tilts from vertical to less than 30 degrees from vertical.
DOE Keyword:	WINDOW
Input Type:	Required
Tradeoffs	Yes

1.3.5.5 Fenestration Orientation and Tilt

Description:	The reference method models the actual azimuth (direction) and surface tilt of windows and skylights (fenestration products) in each wall and roof surface. In the reference method, these window properties are inherited from the parent surface in the reference method. ~~DOE Keyword:~~ ~~Same as EXTERIOR-WALL~~ ~~***1.4.3.11Input Type:***~~

~~Required~~

~~***1.4.3.12 Tradeoffs:***~~

~~Neutral~~

Modeling Rules for Proposed Design:	Azimuth and surface tilt of each glazing surface shall be input as they occur in the construction documents.
Modeling Rules for ~~Reference~~Standard Design (All):	Azimuth and surface tilt of each glazing surface shall be the same as they occur in the proposed design.

1.3.5.6 Fenestration Thermal Properties

Description:	ACMs shall model the overall U-factor and Solar Heat Gain Coefficient (SHGC) for each fenestration assembly, including inside and outside air films and effects of framing, spacers and other non-glass materials as applied to the full rough-out fenestration area. ACMs shall require the user to indicate the source of the U-factor and SHGC: Acceptable sources are NFRC label values, default values from Tables 116-A and 116-B, or alternate default values from the ACM Appendix. ~~For manufactured fenestration assemblies, the overall U-factor and SHGC are from the NFRC label attached to the assembly or from default values listed in Tables 1-D and 1-E of the Standards.~~ ~~For site assembled vertical glazing in buildings with 100,000 square feet of conditioned floor area or greater and 10,000 square feet of vertical glazing or greater, ACMs must allow the user to either input the default U-factor and SHGC listed in Tables 1-D and 1-E or use NFRC U-factor ratings for site built fenestration. For buildings under 100,000 square feet of conditioned floor area or with less than 10,000 square feet of vertical glazing, the user can either use NFRC ratings for site built fenestration , default values from Tables 1-D and 1-E,or determine the U-factor from default values in Appendix I and calculate the assembly's SHGC using the method shown in Appendix I. For skylights that do not have U-factor and SHGC values certified to NFRC, the values shall be determined from Appendix I.~~ In this Section the word "Window" is used to refer to fenestration in a surface that has ~~. A horizontal window with~~ a tilt ~~of up to~~ greater than 60 degrees from the horizontal~~tal is a skylight~~.
DOE-2 Command	WINDOW
DOE-2 Keyword(s)	FRAME-CONDUCTANCE FRAME-WIDTH FRAME-ABS
Input Type	Required
Tradeoffs	Yes
Modeling Rules for Proposed Design:	The reference program uses a FRAME ABSORPTANCE of 0.70. ACMs shall receive inputs for or determine the default for the U-factor and SHGC of each fenestration product of system in the proposed design. NFRC label values are allowed for all fenestration categories. If the user selects "NFRC labeled values" for a particular fenestration product, the ACM shall receive values for the U-factor and SHGC. Use the following rules: • For manufactured ~~windows~~ vertical fenestration, the default values shall be the U-factor and SHGC listed in Table 116-A and Table 116-B of the Standard~~, ACMs must require the user to input the U-factor and SHGC for each window~~

~~from the NFRC label as it occurs in the construction documents for the building~~.

- For site-built fenestration products ~~assembled vertical glazing~~ in buildings with ~~100,000 square feet of conditioned floor area or greater and~~ 10,000 square feet or more of site-built fenestration~~vertical glazing or greater~~, ~~ACMs must either use~~ the default values shall be the U-factor and SHGC listed in Tables ~~1-D~~ 116-A and ~~1-E~~116-B of the Standards ~~or use NFRC ratings for site- built fenestration~~.
- For site-built fenestration products ~~assembled vertical glazing~~ in buildings ~~under 100,000 square feet of conditioned floor area or~~ with less than 10,000 square feet of site-built fenestration, the default values shall be ~~vertical glazing, ACMs must determine~~ the alternate default U-factor and SHGC using ~~procedures and~~ the defaults and calculations specified in ACM Appendix NI or the U-factor and SHGC listed in Table 116-A and Table 116-B of the Standard.~~, or use NFRC ratings for site built fenestration~~
- For skylights, ~~ACMs must determine~~ the default values shall be the alternate default U-factor and SHGC using ~~procedures and~~ default~~s~~ calculations specified in Appendix NI or the U-factor and SHGC listed in Table 116-A and Table 116-B of the Standard. ~~, or use NFRC ratings for site built fenestration. The reference program uses a FRAME ABSORPTANCE of 0.70.~~
- For field-fabricated fenestration, the default values shall be the U-factor and SHGC listed in Tables 116-A and 116-B of the Standard. The use of this field fabricated fenestration or field-fabricated exterior doors is an exceptional condition that shall be reported in the exceptional conditions checklist.

Modeling Rules for ~~Reference~~Standard Design (New & Altered Existing): ACMs shall use the appropriate "Maximum U-factor " and RSHG or ~~SHGC~~SHGC for the window as appropriate from Tables ~~1-H and 1-I~~143-A, 143-B, and 143-C of the Standards including the framing according to the occupancy type and the climate zone. The ~~reference design~~standard design uses a FRAME ABSORPTANCE of 0.70.

Modeling Rules for ~~Reference~~Standard Design (Existing Unchanged): The standard design shall use the existing design's U-factor and SHGC or RSHG as appropriate including the framing. The ~~reference design~~standard design uses a FRAME ABSORPTANCE of 0.70.

1.3.5.7 Solar Heat Gain Coefficient of Fenestration in Walls & Doors

Description: The reference method models the solar heat gain coefficient (SHGC) of glass including the framing, dividers, and mullions. The shading effects of dirt, dust, and degradation are purposely neglected and an ACM user may not adjust solar heat gain coefficients because of these effects. The ACM user's manual ~~must~~shall reflect these restrictions on user entries.

If the user has specified Display Perimeter, ACMs may also receive an input in a subordinate menu for the Relative Solar Heat Gain (RSHG) requirement except for cases where local building codes prohibit or limit the use of overhangs or exterior shading devices. The use of this RSHG exception input is itself an exceptional condition that ~~must~~shall be reported in the exceptional conditions checklist of the PERF-1 form.

DOE Keyword: SHADING-COEF

Input Type: Required

Tradeoffs: Yes

Modeling Rules for Proposed Design: Fenestration solar heat gain coefficient (SHGC) for each fenestration surface shall be input as it occurs in the construction documents for the building. ACMs that

require inputting shading coefficient (SC) instead of SHGC shall calculate the fenestration's shading coefficient using the following formula:

Equation N2-4 $SC_{fenestration} = SHGC/0.87$

~~$SC_{fenestration} = SHGC/0.87$~~

Note: This equation is taken from Blueprint #57, dated Fall 1996. Since both SC for nonresidential buildings and SHGC apply to the entire rough-out opening, the adjustment for framing and divider has been removed.

Modeling Rules for ~~Reference~~Standard Design (New & Altered Existing): ACMs shall use the appropriate maximum RSHG values from ~~Tables 1-H and 1-I~~Tables 143-A, 143-B, and 143-C of the Standards according to occupancy, climate zone, window wall ratio and orientation as the standard design solar heat gain coefficient. The maximum RSHG is different for north-oriented glass; for the purposes of establishing standard design solar heat gain coefficient, north glass is glass in walls facing from 45° west (not inclusive) to 45° east (inclusive) of true north.

If the user has claimed the RSHG exception for a section of display perimeter, the standard design uses the maximum RSHG for north glass found in ~~Tables 1-H and 1-I~~Tables 143-A, 143-B, and 143-C of the Standards for any fenestration surface utilizing this exception.

Modeling Rules for ~~Reference~~Standard Design (Existing Unchanged): The standard design shall use the same RSHG value as the existing design including the framing.

1.3.5.8 Solar Heat Gain Coefficient of Fenestration in Roofs

Description: The reference method models the solar heat gain coefficient of the fenestration including the glass and framing. The shading effects of dirt, dust, and degradation are purposely neglected and an ACM user may not adjust solar heat gain coefficients because of these effects. The ACM user's manual ~~must~~shall reflect these restrictions on user entries.

DOE-2 Command

DOE-2 Keyword(s) SHADING-COEF

Input Type Required

Tradeoffs Yes

Modeling Rules for Proposed Design: Fenestration solar heat gain coefficient for each fenestration surface in the roof(s) of a building or permitted space shall be input as it occurs in the construction documents for the building or permitted space. ACMs that require inputting shading coefficient (SC) instead of SHGC shall calculate the fenestration's shading coefficient using the following formula:

Equation N2-5 $SC_{fenestration} = SHGC/0.87$

Note: This equation is taken from Blueprint #57, dated Fall 1996. Since both SC for nonresidential buildings and SHGC apply to the entire rough-out opening, the adjustment for framing and divider has been removed.

Modeling Rules for ~~Reference~~Standard Design (New & Altered Existing): ACMs shall use the appropriate maximum solar heat gain coefficient from ~~Tables 1-H and 1-I~~Tables 143-A, 143-B, and 143-C of the Standards according to the occupancy type, the climate zone and the fenestration type.

Modeling Rules for ~~Reference~~Standard Design (Existing Unchanged):	The standard design shall use the same SHGC value as the existing design.

1.3.5.9 Overhangs

Description:	ACMs ~~must~~shall be capable of modeling overhangs over windows and ~~must~~shall have the following inputs: • *Overhang position.* The distance from the edge of the window to the edge of the overhang. • *Height above window.* The distance from the top of the window to the overhang. • *Overhang Width*. The width of the overhang parallel to the plane of the window. • *Overhang extension*. The distance the overhang extends past the edge of the window jams. • *Overhang Angle.* The angle between the plane of window and the plane of the overhang.
DOE-2 Command	WINDOW
DOE-2 Keyword(s)	OVERHANG-A OVERHANG-B OVERHANG-W OVERHANG-D OVERHANG-ANGLE
Input Type	Default
Tradeoffs	Yes
Modeling Rules for Proposed Design:	Overhangs shall be modeled in the proposed design for each window as they are shown in the construction documents.
Default:	No overhang.
Modeling Rules for Standard Design (New & Altered Existing):	~~Overhangs shall not be modeled in the standard design; however, the fenestration must meet the prescriptive requirements for U-factor and solar heat gain coefficient~~No overhang.
Modeling Rules for Standard Design (Existing Unchanged):	Overhangs shall be modeled in the same manner as they occur in the existing design.

1.3.5.10 Vertical Shading Fins

Description:	ACMs ~~must~~shall be capable of modeling vertical fins. Vertical fins shall affect the solar gain of fenestration products only. ACMs ~~must~~shall have the following inputs: • *Wall/window.* Input ~~must~~shall require the user to specify the wall/or window with which the fin is associated. • *Horizontal position.* The distance from the outside edge of the window to the fin. • *Vertical position.* The distance from the top edge of the fin to the top edge of

the window.

- *Fin height*. The vertical height of the fin.
- *Depth.* The depth of the fin, measured perpendicularly from the wall to the outside edge of the fin.

DOE-2 Command	WINDOW
DOE-2 Keyword(s)	LEFT-FIN-A RIGHT-FIN-A LEFT-FIN-B RIGHT-FIN-B LEFT-FIN-H RIGHT-FIN-H LEFT-FIN-D RIGHT-FIN-D
Input Type	Default
Tradeoffs	Yes, except for pre-existing vertical fins in existing buildings.
Modeling Rules for Proposed Design:	Vertical fins shall be modeled in the proposed design for each window as they are shown in the construction documents.
Default	No vertical fins
Modeling Rules for ~~Reference~~Standard Design (New & Altered Existing):	~~Vertical fins shall not be modeled in the standard design; however, the fenestration must meet the prescriptive requirements for U-factor and solar heat gain coefficient.~~No vertical fins
Modeling Rules for ~~Reference~~Standard Design (Existing Unchanged):	Vertical fins shall be modeled in the same manner as they occur in the existing design.

1.3.5.11 Exterior Fenestration Shading Devices

Description:	ACMs ~~must~~shall be able to model exterior fenestration shading devices which affect the solar gain of glazing surfaces. Overhangs and side fins are not considered exterior devices in this context. .
DOE-2 Command	N/A
DOE-2 Keyword(s)	N/A
Input Type	Default
Tradeoffs	Yes
Modeling Rules for Proposed Design:	Exterior fenestration shading devices shall be modeled in the proposed design for each window as they are shown in the construction documents. Note: Applications of Exterior Shading Devices are very limited; see Section 4.3.4.9 ~~4.3.2.24~~ for restrictions on modeling Exterior Shading Devices.
Default:	No exterior fenestration shading devices
Modeling Rules for ~~Reference~~Standard Design (New & Altered Existing):	Exterior fenestration shading devices shall not be modeled in the standard design; however, the fenestration ~~must~~shall meet the prescriptive requirements for U-factor and solar heat gain coefficient.
Modeling Rules for ~~Reference~~Standard Design (Existing Unchanged):	Exterior fenestration shading devices shall be modeled in the same manner as they occur in the existing design.

1.3.5.12 Window Management

Description:	The reference method simulates window management/interior shading devices in the following manner. ACMs may either use this method or a method yielding equivalent results. Window solar heat gain coefficient is multiplied by a multiplier which gives the effective solar heat gain coefficient for combined shading device and window when the shading device covers the window.
DOE-2 Command	
DOE-2 Keyword(s)	SHADING-SCHEDULE. Use the DOE-2 window management algorithms and close the default drapes or internal shade when solar gain through the window exceeds 30 Btu/h-ft². Otherwise open the default internal shade.
Input Type	Prescribed
Tradeoffs	Neutral
Default	The default internal shade shall reduce solar gains by 20% (a multiplier of 0.80) when the drapes are closed.
Modeling Rules for Proposed Design:	The proposed design shall ~~model~~ use the default shade and window management ~~fixed interior drapes with a solar heat gain coefficient multiplier of 0.80~~.
Modeling Rules for ~~Reference~~Standard Design (All):	The standard design models the same window management as the proposed design.

~~2.3.6~~1.3.6 Below-Grade Envelope

1.3.6.1 Underground Walls

Description:	Underground walls separate a conditioned space from the adjacent soil or bedrock.
DOE-2 Command	UNDERGROUND-WALL
DOE-2 Keyword(s)	WIDTH HEIGHT
Input Type	Prescribed
Tradeoffs	Neutral
Modeling Rules for Proposed Design:	The reference method shall model below grade walls using UNDERGROUND-WALL Keyword using their actual construction, input by the user, with an additional one-foot layer of earth coupled to the ground temperature. ACMs ~~must~~shall set the effective U-factor of underground walls to zero The reference method shall assume soil layers to have a thermal conductivity of 0.50 Btu-ft/h-ft^2-^{o}F and a density of 85 lb/~~ft~~^{3}ft³. Concrete is assumed to have a thermal conductivity of 0.~~7576~~ 758 Btu-ft/h-ft^2-^{o}F and a density of 140 lb/~~ft~~^{3}ft³. The reference method assumes that both soil and concrete have a specific heat of 0.20 Btu/lb-^{o}F. If the proposed design has an insulated slab, then heat loss from the slab shall be approximated by entering an exterior wall and assigning an area to the wall equal to the exposed perimeter of the slab. The U-factor of the exterior wall shall be the F-factor for the proposed design selected from ACM Joint Appendix IV, Table IV-26~~24~~ and modeled according to the rules with Table IV-26~~24~~.
Modeling Rules for	ACMs shall model underground walls in the standard design exactly the same as

~~Reference~~Standard Design (All):	they are modeled in the proposed design, including construction, area and position. The slab perimeter (the area of the hypothetical exterior wall described for the proposed design) shall be the same for the standard design and the U-factor of this hypothetical exterior wall shall be the F-factor from IV-26~~24~~-A1 and modeled according to the rules with Table IV-26~~24~~.

1.3.6.2 Underground Concrete Floors

Description:	Underground concrete floors separate a conditioned space from the adjacent soil or bedrock.
DOE-2 Command	UNDERGROUND-FLOOR
DOE-2 Keyword(s)	WIDTH HEIGHT
Input Type	Prescribed
Tradeoffs	Neutral
Modeling Rules for Proposed Design:	ACMs shall model underground floor constructions and areas input as they occur in the construction documents along with a one-foot layer of soil beneath the floor. ACMs ~~must~~shall set the effective U-factor of underground floors to zero. The reference method shall assume soil layers to have a thermal conductivity of 0.50 Btu-ft/h-ft^2-ºF and a density of 85 lb/ft³. Concrete is assumed to have a thermal conductivity of 0.7576 Btu-ft/h-ft^2-ºF and a density of 140 lb/ft³. The reference method assumes that both soil and concrete have a specific heat of 0.20 Btu/lb-ºF.
Modeling Rules for ~~Reference~~Standard Design (All):	The standard design shall use the same underground floor constructions, areas, and position as the proposed design.

~~2.3~~1.4 Building Occupancy ~~- Required Capabilities~~

The user of an ACM ~~must~~shall be able to select an occupancy type from certain allowed tables. ACMs that do not have separate selection lists for ventilation occupancy assumptions and all other occupancy assumptions ~~must~~shall allow the user to select from the occupancies listed in Table N2-2 and Table N2-3 or to select from an officially approved alternative sub-occupancy list that maps into those occupancies. ACMs that have separate occupancy selection lists for ventilation assumptions and other assumptions ~~must~~shall use the occupancy selections given in tables in the Building Energy Efficiency Standards or approved alternative lists of occupancies. The occupancies listed in Table 121-A~~-F~~ in the Standards ~~must~~shall be used for ventilation occupancy selections and the occupancies listed in Table 146-D~~-N~~ in the Standards ~~must~~shall be used for selecting the remaining occupancy assumptions. Alternatively specific occupancy selection lists approved by the Commission that map into Tables ~~1-F~~121-A or 146-D~~1-N~~ may be used.

A building consists of one or more occupancy types. ACMs cannot combine different occupancy types. Table N2-2 and Table N2-3 describe all of the schedules and full load assumptions for occupants, lighting, infiltration, receptacle loads and ventilation. Full load assumptions are used for both the proposed design and the ~~reference design~~standard design compliance simulations.

~~2.3.1~~1.4.1 Assignment ~~Occupancy~~

1.4.1.1 Occupancy Types

Description	A modeled building ~~must~~shall have at least one defined occupancy type. A default occupancy of "~~unknown~~all other" may be used to fulfill this requirement. Alternative Calculation Methods (ACMs) ~~must~~shall model the following occupancy types for

buildings and spaces when lighting compliance is not performed or lighting plans are submitted for the entire building.

Occupancies that are considered as subcategories of these occupancies are listed ~~below each occupancy. These occupancy types are also listed~~ in Table N2-2 of this manual.~~:~~

~~Commercial and Industrial Work~~

~~including both general and precision work, barber and beauty shops, laundries, and dry cleaning~~

~~? Grocery Store~~

~~including convenience stores~~

~~? Industrial and Commercial Storage~~

~~? Medical/Clinical~~

~~? Office~~

~~including banks & financial institutions, courtrooms, accounting, art, design drafting and engineering spaces~~

~~? Other~~

~~including corridors, restrooms, and support areas as well as ALL others not specifically mentioned herein for spaces without lighting plans~~

~~? Religious Worship, Auditorium, Convention Center~~

~~including exhibit display areas and lobbies associated with religious worship spaces, auditoriums, and convention centers~~

~~? Restaurant~~

~~including dining rooms, kitchens, hotel function areas, bars, cocktail lounges, casinos~~

~~? Retail and Wholesale Store~~

~~? School~~

~~including classrooms, day care, kindergarten, primary and secondary schools, trade schools, training centers, colleges, universities, research areas, laboratories~~

~~? Theater~~

~~including movie theaters, live stage performance theaters, malls, arcades, and atria~~

~~? Unknown~~

~~? Again,~~ ACMs with default occupancies ~~must~~shall use the "~~unknown~~all other" occupancy category as a default.

~~?~~ When lighting plans are submitted for portions or for the entire building or when lighting compliance is not performed, Alternative Calculation Methods (ACMs) ~~must~~shall model the following area occupancy types for spaces within an HVAC zone. These area occupancy types are listed in Table N2-3 of this manual. (Note: Some additional area occupancies are listed as subcategories of the area occupancies listed in Table N2-3):

~~? Auditorium~~

~~? Auto Repair Workshop~~

~~? Bank/Financial Institution~~

~~including Banks, Savings & Loans, Credit Unions, Mortgage and Title Insurance~~

~~? Bar, Cocktail Lounge and Casino including cabarets, night clubs, bingo parlors and other gaming rooms with smoking~~

~~? Beauty Shop~~

~~? Barber Shop~~

~~? Classroom~~

~~including areas for instructional purposes~~

~~? Commercial/Industrial Storage~~

~~including warehouses and storage and stock rooms~~

~~? Commercial/Industrial Work - General, High Bay~~

~~including manufacturing areas~~

~~? Commercial/Industrial Work - General, Low Bay~~

~~including manufacturing areas~~

~~? Commercial/Industrial Work - Precision~~

~~Note: the use of this category is an exceptional condition and must be documented on the exceptional conditions checklist.~~

~~? Convention, Conference and Meeting Center~~

~~? Corridor, Restroom and Support Area~~

~~including all circulation spaces, elevators, escalators, stairways, and janitorial room~~

~~? Courtrooms~~

~~? Dining Area~~

~~including cafeterias and ballrooms~~

~~? Dry Cleaning (Coin Operated)~~

~~? Dry Cleaning (Full Service Commercial)~~

~~? Electrical, Mechanical Rooms~~

~~? Exercising Rooms and Gymnasium~~

~~including day care, health clubs, sports arena, exercise rooms, dojos, spas, pools, saunas, and massage rooms~~

~~? Exhibit Display Area and Museum~~

~~including art galleries~~

~~? Grocery Sales Area~~

~~? High-Rise Residential~~

~~? Hotel Function Area~~

~~? Hotel/Motel Guest Room~~

~~? Kitchen and Food Preparation~~

~~? Laundry~~

~~? Library - Reading Area~~

~~? Library - Stacks~~

~~? Lobby - Hotel~~

~~? Lobby - Main Entry~~

~~including depots, terminals, and stations~~

~~? Lobby - Office Reception/Waiting~~

~~? Locker/Dressing Room~~

~~? Lounge/Recreation~~

~~? Mall, Arcade and Atrium~~

~~? Medical and Clinical Care~~

~~including dental care, optical care~~

~~? Mixed Occupancy~~

~~? Office~~

~~including accounting, counseling, art, drafting, design, insurance, stock & bond brokers, filing areas, conference rooms, mail rooms, telecommunications, and computer areas~~

~~? Other~~

~~? Religious Worship~~

~~including churches, synagogues, temples, tabernacles, mosques, basilicas, cathedrals, missions, chapels, meditation areas, altars, shrines, worship centers, funeral homes, and memorials~~

~~? Retail Sales, Wholesale Showroom~~

~~including pharmacies, drug stores, floral shops, video tape rentals~~

~~? Smoking Lounge~~

~~? Theater (Motion Picture)~~

~~? Theater (Performance)~~

~~including dance halls and discotheques~~

~~? Unknown~~

~~?~~ Please note that this list is comprehensive given the categories "all other." ~~and "unknown."~~ Occupancies and area occupancies other than those listed herein cannot be approximated by another occupancy or area occupancy unless that substitution has been approved by the Executive Director of the Commission in writing.

The selection lists accommodate unknown or miscellaneous unlisted occupancies. Any space that will be leased to an unknown tenant is considered “tenant lease space.” Other occupancies unknown to the applicant and ~~A~~any known occupancy not reasonably similar (as determined by the local building official) to an occupancy specified on a Commission-approved list is considered "all other."

DOE-2 Command	SPACE
DOE-2 Keyword(s)	SPACE-CONDITIONS

Input Type	Required
Tradeoffs	Neutral
Modeling Rules for Proposed Design:	ACMs ~~must~~shall require users to specify the occupancy of the building or the area occupancy of each zone being modeled. ACMs ~~must~~shall require the user to identify if lighting compliance is performed (lighting plans are included or have already been submitted). ACMs shall determine the occupancy type as follows: • *Lighting compliance not performed.* The ACM ~~must~~shall require the user to select the occupancy type(s) for the building from the occupancies reported in Table N2-2 or Table ~~1-M~~146-C of the Standards. The ACM ~~must~~shall use the occupancy assumptions of this Table for compliance simulations. • *Lighting compliance performed*. The ACM ~~must~~shall require the user to select the occupancy type(s) for each zone from the occupancies reported in Table N2-3 or Table 146-C~~1-N~~ of the Standards. The ACM ~~must~~shall use the area occupancy assumptions from Table N2-3 for compliance simulations. Tailored lighting and tailored ventilation are permitted as exceptional condition modifications to these default assumptions, but ~~must~~shall be reported on the PERF-1 as exceptional conditions and on other applicable compliance forms. ~~The tailored lighting values cannot be traded off for other features.~~Only the general lighting may be traded off in the performance method. Use-it-or-lose-it lighting power allowances may not be traded off; these shall be the same for both the standard design and the proposed design. ACMs ~~must~~shall use the same default assumptions, listed in Table N2-2 through Table N2-7 of this manual including schedules, occupant densities, outside air ventilation rates, lighting loads, receptacle loads and service water heating loads. ACMs may have a separate occupancy list for ventilation versus other assumptions subject to the constraint that occupancy schedule types cannot be mixed. Users ~~must~~shall select occupancy of a given space based upon the proposed or anticipated occupancy not on the amount of lighting desired. ACM input ~~must~~shall emphasize occupancy choices and similarities not lighting choices. ACMs may not report the occupancy default lighting watts per square foot on the screen when the user is selecting occupancies for a space. After the occupancies are selected by the user, the lighting determined from the user's occupancy selection may appear on a separate entry screen as a default entry in the lighting power input if the user has not already entered it.
Modeling Rules for ~~Reference~~Standard Design (All):	ACMs ~~must~~shall model the same occupancy type(s) and area occupancy type(s) as the proposed building. ACMs ~~must~~shall use the same default assumptions found in Table N2-2 through Table N2-7. Tailored lighting and tailored ventilation are permitted as a modification to these default assumptions but ~~must~~shall be reported on the PERF-1 exceptional condition list. Refer to sections for Lighting, Ventilation, and Process Loads for respective requirements for each of these adjustments.

1.4.1.2 Mixed Area Occupancies

Description:	ACMs shall allow the user to select mixed as the occupancy type when selecting an area occupancy for each zone. This option shall only be available if lighting compliance is performed (lighting plans are (or have been) submitted for the zone). Refer to Chapter 4 for restrictions on selecting mixed as the area occupancy type.
DOE-2 Command	SPACE
DOE-2 Keyword(s)	SPACE-CONDITIONS
Input Type	Required

Tradeoffs	Neutral
Modeling Rules for Proposed Design:	The ACM ~~must~~shall request input for the following: 1. Total area of the space 2. Area and occupancy type of ~~up to four~~ different area occupancy types; however, the subareas may also be optionally entered as percentages of the total area The ACM ~~must~~shall automatically calculate the sum of the areas for the ~~four~~ different occupancies: • If the sum of the ~~four~~ different areas (or percentages) is greater than the input total area of the space, the ACM ~~must~~shall require corrected input or proportionately scale down the entries so that the sum is the total area. • If the sum of the ~~four~~ different occupancies is less than the input total area, the ACM ~~must~~shall assign the occupancy other to the area needed to equal the input total area. The ACM shall assign occupancy-determined assumptions for occupant densities, outside air ventilation rates, lighting loads, receptacle loads and service water heating loads by calculating the area-weighted average for each of these inputs, using the areas input by the user. Refer to sections for Lighting, Ventilation, and Process Loads for respective requirements for each of these adjustments. ACMs shall not allow input of subarea occupancies with different schedules (e.g. Nonresidential, ~~and~~ Residential or Retail) within the same mixed area occupancy. However, "Corridor, Restroom, and Support Area" spaces may be part of a mixed occupancy and use the schedule of the other occupancies making up the mixed occupancy zone rather than the default schedule assigned to this occupancy type.
Modeling Rules for ~~Reference~~Standard Design (All):	ACMs ~~must~~shall use the same default assumptions calculated for the proposed design, as well as any tailored lighting, tailored ventilation, and receptacle loads input for the proposed design.

Table N2-2 – Occupancy Assumptions When Lighting Plans are Submitted for the Entire Building or When Lighting Compliance is not Performed

Occupancy Type	#people per 1000 ft²(1)	Sensible Heat per person(2)	Latent Heat per person(2)	Receptacle Load W/ft²(3)	Hot Water Btu/h per person	Lighting W/ft²(4)	Ventilation CFM/ft²(5)
Auditoriums (Note 8)	143	245	105	1.0	60	1.5	1.07
Convention Centers (Note 8)	136	245	112	0.96	57	1.3 ~~1.4~~	1.02 ~~1.03~~
Financial Institutions	10	250	250	1.5	120	1.1	0.15
~~Parking Garages~~	~~N/a~~	~~N/a~~	~~N/a~~	~~N/a~~	~~N/a~~	~~0.4~~	~~N/a~~
General Commercial and Industrial Work Buildings, High Bay	7	375	625	1.0	120	1.1~~2~~	0.15
General Commercial and Industrial Work Buildings, Low Bay	7	375	625	1.0	120	1.0	0.15
~~General Commercial and Industrial Work Buildings, Precision~~	~~7~~	~~375~~	~~625~~	~~1.0~~	~~120~~	~~1.5~~	~~0.15~~
Grocery Stores (Note 8)	29	252	225	0.91	113	1.5	0.22 ~~0.23~~
Hotel(6)	20	250	200	0.5	60	1.4	0.15
~~Commercial and~~ Industrial and Commercial Storage Buildings	5	268	403	0.43	108	0.7	0.15
Medical Buildings and Clinics~~/Clinical~~	10	250	213	1.18	110	1.1~~1.2~~	0.15
Office Buildings	10	250	206	1.34	106	1.1~~1.2~~	0.15
Religious ~~Worship, Auditorium~~Facilities (Note 8)	136	245	112	0.96	57	1.6~~1.8~~	1.03
~~Auditoriums~~	~~143~~	~~245~~	~~105~~	~~1.0~~	~~60~~	~~1.5~~	~~1.07~~
~~Convention Centers~~	~~136~~	~~245~~	~~112~~	~~0.96~~	~~57~~	~~1.3 1.4~~	~~1.03~~
~~Parking Garages~~	~~N/a~~	~~N/a~~	~~N/a~~	~~N/a~~	~~N/a~~	~~0.4~~	~~N/a~~
Restaurants (Note 8)	45	274	334	0.79	366	1.2	0.38
Retail and Wholesale Stores (Note 8)	29	252	224	0.94	116	1.5 ~~1.7~~	0.22 ~~0.23~~
Schools (Note 8)	40	246	171	1.0	108	1.2 ~~1.4~~	0.32
Theaters (Note 8)	130	268	403	0.54	60	1.3	0.98
All Others	10	250	200	1.0	120	0.6	0.15

(1) Most occupancy values are based on an assumed mix of sub-occupancies within the area. These values were ~~taken from~~ based on one half the maximum occupant load for exiting purposes in the ~~1994 Uniform Building Code, Table No. 10-A~~ CBC. Full value for design conditions. Full year operational schedules reduce these values by up to 50% for compliance simulations and full year test simulations.

(2) From Table 1~~3~~, p. 29.4~~28.8~~, ASHRAE 2001~~1997~~ Handbook of Fundamentals

(3) From Lawrence Berkeley Laboratory study. This value is fixed and includes all equipment that are plugged into receptacle outlets.

(4) From Table ~~1-M~~ 146-B of the Standards for the applicable occupancy. The lighting power density of the standard building, for areas where no lighting plans or specifications are submitted for permit and the occupancy of the building is not known, is 1.2 watts per square foot.

(5) Developed from Section 121 and Table ~~1-F~~121-A of the Standards

(6) ~~From Table N2.2~~ Hotel uses values ~~from~~ for Hotel Function Area from . Table N2-3.

(7) For retail and wholesale stores, the complete building method may only be used when the sales area is 70% or greater of the building area.

(8) For these occupancies, when the proposed design is required to have demand control ventilation by Section 121 (c) 3 the ventilation rate is the minimum that would occur at any time during occupied hours. Additional ventilation would be provided through demand controlled ventilation to maintain CO_2 levels according to Section 121 of the Standards.

Table N2-3 – Area Occupancy Assumptions When Lighting Plans are Submitted for Portions or for the Entire Building or When Lighting Compliance is not Performed

Sub-Occupancy Type [1]	#Ppeople per 1000 ft²[2]	Sensible heat per person[3]	Latent heat per person[3]	Receptacle Load W/ft²[4]	Hot wWater BtuBtu/h per person	Lighting W/ft²[5]	Ventilation CFM/ft²[6]
Auditorium (Note 10)	143	245	105	1.0	60	1.52.0	1.07 1.07 0.15
Auto Repair Workshop	10	275	475	1.0	120	1.12	1.50
Bank/Financial Transactions Institution	10	250	250	1.5	120	1.2 1.4	0.15
Bar, Cocktail Lounge and Casino (Note 10)	67	275	275	1.0	120	1.1	1.50 0.50 0.20
Barber and Beauty Shop	10	250	200	2.0	120	1.0	0.40
Classrooms, Lecture, Training, Vocational Room	50	245	155	1.0	120	1.2 1.6	0.38
Courtrooms	25	250	200	1.5	120	1.1	0.19
Civic Facilities Meeting Space (Note 10)	25	250	200	1.5	120	1.3 1.4	0.19
Commercial and /Industrial Storage	3	275	475	0.2	120	0.6	0.15
Convention, Conference, Multi-purpose and Meeting Centers (Note 10)	67	245	155	1.0	60	1.4 1.5	0.50 0.50 0.15
Corridors, Restrooms, Stairs, and Support Areas	10	250	250	0.2	0	0.6	0.15
Dining Area (Note 10)	67	275	275	0.5	385	1.1	0.50 0.50 0.15
Electrical, and Mechanical Room	3	250	250	0.2	0	0.7	0.15
Exercise,Center, ing Centers and Gymnasium	20	255	875	0.5	120	1.0	0.15
Exhibit, Display Area and Museum (Note 10)	67	250	250	1.5	60	2.0	0.50
Financial Transaction	10	250	250	1.5	120	1.2	0.15
General Commercial and /Industrial Work General, High Bay	10	275	475	1.0	120	1.12	0.15
General Commercial and /Industrial Work General, Low Bay	10	275	475	1.0	120	1.0	0.15
General Commercial and /Industrial Work, Precision (8)	10	250	200	1.0	120	1.35	0.15
Dry Cleaning (Coin Operated)	10	250	250	3.0	120	0.91.0	0.30
Dry Cleaning (Full Service Commercial)	10	250	250	3.0	120	0.91.0	0.45
General Commercial and Industrial Work, High Bay	10	275	475	1.0	120	1. 1	0.15
General Commercial and Industrial Work, Low Bay	10	275	475	1.0	120	1.0	0.15
General Commercial and Industrial Work, Precision	10	250	200	1.0	120	1. 3	0.15
Grocery Sales Area (Note 10)	33	250	200	1.0	120	1.6	0.25 0.25 0.15
High-Rise Residential Living Spaces [9]	5	245	155	0.5	(7)	0.5	0.15
Housing, Public and Commons Areas, Multi-family	10	250	250	0.5	120	1.0	0.15
Housing, Public and Commons Areas, Dormitory, Senior Housing	10	250	250	0.5	120	1.5	0.15
Hotel Function Area (Note 10)	67	250	200	0.5	60	2.21.5	0.50 0.50 0.15
Hotel/Motel Guest Room[9]	5	245	155	0.5	2800	0.5	0.15
Housing, Public and Common Areas, Multi-family	10	250	250	0.5	120	1.0	0.15
Housing, Public and Common Areas, Dormitory, Senior Housing	10	250	250	0.5	120	1.5	0.15
Kitchen, and Food Preparation	5	275	475	1.5	385	1.6 1.7	0.15

Laundry	10	250	250	3.0	385	0.9	0.15
Library, – Reading Areas	20	250	200	1.5	120	1.2	0.15
Library, – Stacks	10	250	200	1.5	120	1.5	0.15
Lobby, – Hotel	10	250	250	0.5	120	1.1 1.7	0.15
Lobby, – Main Entry and Assembly	1410	250	250	0.5	60	1.5	1.070.15
Lobby, – Office Reception/Waiting	10	250	250	0.5	120	1.1	0.15
Locker/ and Dressing Room	20	255	475	0.5	385	0.8	0.15
Lounge, Recreation (Note 10)	67	275	275	1.0	60	1.1	0.50
Malls, Arcades, and Atrium (Note 10)	33	250	250	0.5	120	1.2	0.25
Medical and Clinical Care	10	250	200	1.5	160	1.2 1.4	0.15
Office	10	250	200	1.5	120	1.2 1.3	0.15
Parking Garage	N/A	N/A	N/A	N/A	N/A	0.4	N/A
Police Station and Fire Station	10	250	200	1.5	120	0.9	0.15
Religious Worship (Note 10)	143	245	105	0.5	60	1.52.1	1.07 1.07 0.15
Retail Merchandise Sales, and Wholesale Showroom (Note 10)	33	250	200	1.0	120	1.72.0	0.25 0.25 0.20
Smoking Lounge	67	275	275	0.5	120	1.1	1.50
Tenant Lease Space	10	250	200	1.5	120	1.0	0.15
Transportation Facilities	33	250	250	0.5	120	1.2	0.25
Theater, (Motion Picture) (Note 10)	143	245	105	0.5	60	0.9	1.07 0.15
Theater, (Performance) (Note 10)	143	245	105	0.5	60	1.4	1.07 0.15 1.07
Transportation Function (Note 10)	33	250	250	0.5	120	1.2	0.25
Waiting Area	10	250	250	0.5	120	1.1	0.15
All Others	10	250	200	1.0	120	0.6	0.15
Unknown	10	250	200	1.0	120	0.8	0.15

(1) Subcategories of these suboccupancies are described in Section 2.34.1.1 (Occupancy Types) of this manual.

(2) Values taken from based on one half the maximum occupant load for exiting purposes in the 1994 Uniform Building Code, Table No. 10-A CBC. Full value for design conditions. Full year operational schedules reduce these values by up to 50% for compliance simulations and full year test simulations.

(3) From Table 13, p. 29.48.8, ASHRAE 20011997 Handbook of Fundamentals.

(4) From Lawrence Berkeley Laboratory study. This value is fixed and includes all equipment that are plugged into receptacle outlets.

(5) From Table 1-N 146-C of the Standards for the applicable occupancy. ACMs mustshall use this value for the standard building design when lighting compliance is performed for the zone or area in question.

(6) Developed from Section 121 and Table 1-F121-A of the Standards.

(7) Refer to residential water heating method.

(8) The use of this occupancy category is an exceptional condition that mustshall appear on the exceptional conditions checklist and thus requires special justification and documentation and independent verification by the local enforcement agency.

(9) For hotel/motel guest rooms and high-rise residential living spaces all these values are fixed and are the same for both the proposed design and the standard design. ACMs mustshall ignore user inputs that modify these assumptions for these two occupancies. Spaces in high-rise residential buildings other than living spaces, shall use the values for Housing, Public and Common Areas (either multi-family or senior housing).

(10) For these occupancies, when the proposed design is required to have demand control ventilation by Section 121 (c) 3 the ventilation rate is the minimum that would occur at any time during occupied hours. Additional ventilation would be provided through demand controlled ventilation to maintain CO_2 levels according to Section 121 of the Standards.

1.4.1.3 Occupant Loads

Description: Based on the occupancy or area occupancy type(s) input by the user, ACMs shall determine the correct occupant density and sensible and latent heat gain per

	occupant.
DOE-2 Command	SPACE
DOE-2 Keyword(s)	PEOPLE-SCHEDULE AREA/PERSON PEOPLE-HG-SENS PEOPLE-HG-LAT
Input Type	Prescribed
Tradeoffs	Neutral
Modeling Rules for Proposed Design:	The ACM shall determine the correct occupant load and sensible and latent heat gain per occupant from Table N2-2 or Table N2-3.
Modeling Rules for ~~Reference~~Standard Design (All):	The standard design shall use the same occupant density and sensible and latent heat gain per occupant as the proposed design.

1.4.1.4 Receptacle Loads

Description:	Based on the occupancy or area occupancy type(s) input by the user, ACMs shall determine the correct receptacle load for each occupancy type. The receptacle load includes all equipment that are plugged into receptacle outlets. For an office occupancy the receptacle load includes all plugged-in office equipment including computer CPUs, computer monitors, workstations, and printers.
DOE-2 Command	SPACE
DOE-2 Keyword(s)	EQUIPMENT-W/SQFT EQUIP-SCHEDULE
Input Type	Prescribed
Tradeoffs	Neutral
Modeling Rules for Proposed Design:	The ACM shall determine the correct receptacle load from Table N2-2 or Table N2-3.
Modeling Rules for ~~Reference~~Standard Design (All):	The standard design shall use the receptacle load of the proposed design.

1.4.1.5 Process Loads

Description:	Process load is the internal energy of a building resulting from an activity or treatment not related to the space conditioning, lighting, service water heating, or ventilating of a building as it relates to human occupancy. Process load may include sensible and/or latent components. ACMs shall model and simulate process loads only if the amount of the process energy and the location and type of process equipment are specified in the construction documents. These information ~~must~~shall correspond to specific special equipment shown on the building plans and detailed in the specifications. The ACM Compliance Documentation shall inform the user that the ACM will output process loads including the types of process equipment and locations on the compliance forms. ACMs shall use the Equipment Schedules from Tables N2-4, N2-5, N2-6, ~~or~~ N2-7, or N2-8 for the operation of process equipment based on the occupancy type selected by the user.

DOE-2 Command	SPACE
DOE-2 Keyword(s)	SOURCE-TYPE SOURCE-BTU/HR SOURCE-SENSIBLE SOURCE-LATENT
Input Type	Default
Tradeoffs	Neutral
Modeling Rules for Proposed Design:	ACMs ~~must~~shall receive input for Sensible and/or Latent Process Load for each zone in the proposed design. The process load input ~~must~~shall include the amount of the process load (W/ft^2), the type of process equipment, and the HVAC zone where the process equipment is located. The modeled information ~~must~~shall be consistent with the plans and specifications of the building.
Default:	No Process Loads
Modeling Rules for ~~Reference~~Standard Design (All):	The standard design shall use the same process loads for each zone as the proposed design.

1.4.1.6 Infiltration

Description:	ACMs shall model infiltration of outdoor air through exterior surfaces.
DOE-2 Command	SPACE
DOE-2 Keyword(s)	INF-SCHEDULE INF-METHOD AIR-CHANGES/HR
Input Type	Prescribed
Tradeoffs	Neutral
Modeling Rules for Proposed Design:	Infiltration shall either be modeled as "ON" or "OFF", for each zone, according to the following: • "OFF" if fans are ON and zone supply air quantity (including transfer air) is greater than zone exhaust air quantity. • "ON" if fans are OFF. When infiltration is "ON", the reference method calculates the infiltration rate as 0.038 cfm per square foot of gross exterior partition (walls and windows) area for the zone.
Modeling Rules for ~~Reference~~Standard Design (All):	ACMs shall model infiltration for the standard design exactly the same as the proposed design.

~~2.3.2~~1.4.2 Lighting Power ~~Occupancy~~

1.4.2.1 Outdoor Lighting

With the 2005 Standards, outdoor lighting is regulated and the requirements are contained in Section 147. Outdoor lighting shall not be considered in performance calculations. There are no tradeoffs between outdoor lighting and interior lighting, HVAC or water heating energy. ACMs shall not include outdoor lighting in the TDV energy budget or the TDV energy for the proposed design.

1.4.2.2 Interior Lighting

Description

ACMs shall model lighting ~~Power Density or LPD (in watts per square foot)~~ for each space. Lighting loads shall be included as a component of internal heating loads. ACMs ~~must~~shall allocate 100% of the lighting heat to the space in which the lights occur.

ACMs shall receive an input to indicate one of the following conditions for the building:

1. *Lighting compliance not performed.* When the user indicates with the required ACM input that no lighting compliance will be performed, the ACM ~~must~~shall require the user to select and input the occupancy type(s) of the building from Table N2-2 or Table N2-3~~2-2~~. The ACM shall determine the lighting levels based on the selected occupancy type(s). An ACM ~~must~~shall not allow the user to input any lighting power densities for the building.

   NOTE: ACMs may use Table N2-2 even if the building has multiple occupancies.

2. *Lighting compliance performed.* When the user indicates with that lighting compliance will be performed and lighting plans will be submitted for the entire building (excluding the residential units of high-rise residential buildings and hotel/motel guest rooms), the ACM ~~must~~shall require the user to select and input the occupancy type(s) from Table N2-2 or Table N2-3~~2-2~~ and enter the proposed interior lighting equipment or interior lighting power density (LPD) for ~~the entire building~~each space that is modeled. Proposed design use-it-or-loose-it lighting power shall be entered separately from the general lighting. However, if lighting plans will be submitted only for portions of the building, the ACM ~~must~~shall require the user to select and input the occupancy type(s) from Table N2-3~~Table 2-2~~ and enter the actual lighting levels for portions of the building with lighting plans.

ACMs ~~must~~shall allow the user to input a Tailored Lighting Input, lighting control credits and the fraction of light heat rejected to indirectly conditioned spaces for each zone.

~~The tailored lighting Input is the lighting power density specified on prescriptively-complying set of lighting plans that is less than or equal to the allowed watts on the corresponding approved set of tailored lighting forms (LTG-4).~~ The tailored lighting method is intended to accommodate ~~inputs are designed to allow~~ special lighting applications ~~to comply~~, Complete lighting plans and space plans shall be developed to support the special needs triggering the tailored method. Compliance forms for the tailored method shall be developed and these shall be verified by the plans examiner. ~~but to be used they must correspond to specific needs and the particular design and the plans and specifications used to meet those needs. These plans must be capable of independent compliance approval at the light levels specified.~~

If ~~a value is input for~~ the tailored lighting method is used~~Input~~, the ACM shall make an entry in the special features section ~~output~~ on the compliance forms that the tailored lighting ~~loads have~~ method has been used in compliance and that all necessary tailored lighting forms and worksheets documenting the lighting and its justification ~~must~~shall be provided as part of the compliance documentation and be approved independently.

With the tailored method the use-it-or-lose-it lighting power shall be entered into the ACM separately from the general lighting. No tradeoffs are allowed for the use-it-or-lose-it lighting power.

If a value is input for lighting control credits, the ACM shall output on the compliance ~~forms~~ documentation that lighting control credits have been used in compliance ~~and~~

~~that the lighting Control Credit Watts from Column I for Zone Total from LTG-3, for the applicable zone, Lighting Controls Credit Worksheet have been used as the lighting control credit inputs~~.

Note: If the standard design would otherwise be modeled with skylights and automatic lighting controls as required by Standards Section 143(c) and Section 131(a), and the user would like to apply an occupancy exception, the user shall select and input the occupancy type(s) of the building from Table N2-2. All occupancies qualifying for the exception are included in the following list: Auditorium, Commercial/Industrial Storage – Refrigerated, Exhibit Display Area and Museum, Theater (Motion Picture), and Theater (Performance).

DOE-2 Command	SPACE
DOE-2 Keyword(s)	LIGHTING-SCHEDULE LIGHTING-W/SQFT LIGHT-TO-SPACE
Input Type	Required
Tradeoffs	Yes
Modeling Rules for Proposed Design:	The proposed design lighting level is restricted based on which of the above two conditions is selected by the user for the building. The proposed design lighting level is determined as follows:

1. *Lighting compliance not performed.* The proposed design lighting level shall be the lighting level listed in Table N2-2 or Table N2-3~~2-2~~. ACMs ~~must~~shall report the default lighting energy on PERF-1 and indicate that no lighting compliance was performed. ACMs ~~must~~shall not print any Lighting forms.

2. *Lighting compliance performed.* The proposed design lighting level for each space shall be as follows:

   a) *Nonresidential occupancies*: For each space the proposed design lighting level shall be the actual lighting level of the space as shown in the construction documents and lighting compliance documentation. For each space without specified lighting level, ACMs shall select the default lighting level from Table N2-3 according to the occupancy type of the space.

   b) *High-rise residential and hotel/motel occupancies*: User inputs for lighting (and lighting controls) for the residential units and hotel/motel guest rooms ~~must~~shall be ignored and the lighting levels determined from Table N2-3 ~~must~~shall be used.

ACMs ~~must~~shall print all applicable lighting forms and report the lighting energy use and the lighting level (Watts/ft^2) for the entire project. ACMs ~~must~~shall report "No Lighting Installed" for nonresidential spaces with no installed lighting. ACMs ~~must~~shall report "Default Residential Lighting" for residential units of high rise residential buildings and hotel/motel guest rooms.

If the modeled Lighting Power Density (LPD) is different than the actual LPD calculated from the fixture schedule for the building, ACMs shall model the larger of the two values for sizing the mechanical systems and for the compliance run. ACMs shall report the larger value on PERF-1. Lighting levels shall be adjusted by any lighting Control Credit Watts, if input by the user.

If daylighting controls are used for daylight zones under skylights greater than 2,500 ft^2 (see Section 131(c)2. of the Standards), then the lighting power for the controlled lighting is reduced by Equation N2-6 for multi-level astronomical time switch controls and Equation N2-7 for automatic multi-level daylighting controls.

Equation N2-6 $$PAF_{ASTRO} = 10 \times \text{Effective Aperture} - \frac{\text{Lighting Power Density}}{10} + 0.2$$

Equation N2-7 $$PAF_{PHOTO} = 2 \times PAF_{ASTRO}$$

where

Equation N2-8 $$\text{Effective Aperture} = \frac{VLT_{glazing} \times \text{Well Efficiency} \times \text{Skylight Area} \times 0.85}{\text{Daylit Area under Skylights}}$$

$VLT_{glazing}$ = visible transmittance of the glazing system including diffusers, when the etire system is not rated as a whole $VLT_{glazing}$ is the product of the visible transmittance of the components

Well Efficiency = as defined in Standards Section 146(b)4.

Skylight area = the sum of the all of the skylight rough open areas in the zone

Daylit area under skylights = as described in Standards Section 131(c)

Note: In all cases where the photocontrol credit for skylighting is applied, the standard design shall include a multi-level astronomical time switch controls

Modeling Rules for ~~Reference~~Standard Design (New & Altered Existing):

ACMs shall determine standard design lighting level as follows:

1. *Lighting compliance not performed.* The standard design lighting level shall be the same as the proposed design lighting level.
2. *Lighting compliance performed.*

   a) If no Tailored Lighting Allotment is input and lighting plans will be submitted for the entire building (excluding the residential units of high-rise residential buildings and hotel/motel guest rooms), the standard design lighting level shall be determined from either the whole building or area category method~~same Table used for the proposed design~~.

   b) If lighting plans will be submitted only for portions of the building, the standard design lighting level in areas without lighting plans shall be the lighting level listed in Table N2-3.

   c) If a tailored lighting ~~allotment~~ method is used~~input~~, the use-it-or-lose-it power for the proposed design shall be entered separately from the general lighting. The standard design shall have the same use-it-or-lose-it lighting power as the proposed design. ~~the standard design lighting level shall be the Tailored Lighting Allotment.~~

   d) In spaces with skylights that meet the criteria of section 131(c)2, the lighting power density of general lighting shall be reduced by PAF_{ASTRO} as given in Equation N2-6~~2.4.2.1.1~~.

   e) In spaces that meet the criteria of Standards Section 143(c), the space shall be modeled as having astronomical time switch controls on the general lighting for the greater of the following areas: the actual daylit zone or one half of the area of the space. The lighting power density of general lighting shall be reduced PAF_{ASTRO} as given in Equation N2-6~~2.4.2.1.1~~. where Effective aperture shall be taken as 0.01 for spaces with less than 1 W/SF general lighting power density and the effective aperture will be 0.012 for spaces with general lighting power densities greater or equal to 1W/SF

Modeling Rules for ~~Reference~~Standard Design (Existing Unchanged):	ACMs shall determine the standard design lighting level of each space the same as it occurs in the existing design.

~~2.3.3~~1.4.3 Schedules ~~Occupancy~~

1.4.3.1 Schedule Types

Description:	Schedules are either "Nonresidential," "Retail", "Hotel Function," or "Residential."
DOE-2 Command	N/A
DOE-2 Keyword(s)	N/A
Input Type	Required
Tradeoffs	Neutral
Modeling Rules for Proposed Design:	ACMs ~~must~~shall select the schedule type from Table N2-4. If 70 percent or more of the conditioned space in a building served by a central system is one occupancy type, the entire building may be modeled with that occupancy schedule. Otherwise, each occupancy schedule shall be modeled separately with the capacity of the central system allocated to each occupancy schedule according to the portion of the total conditioned floor area served by the central system.
Modeling Rules for ~~Reference~~Standard Design (All):	The standard design shall use the same schedule type as the proposed design except for the residential units of high-rise residential buildings with or without setback thermostat for which the standard design shall always use the schedule type with setback thermostat (Table N2-7).

1.4.3.2 Weekly Schedules

Description:	The reference method has three different schedules for different days of the week: (1) Weekdays, (2) Saturdays, and (3) Sundays (which includes holidays). Weekly schedules specify: a) the percentage of full load for internal gains; b) thermostat set points for heating and cooling systems; and, c) hours of operation for heating, cooling and ventilation systems.
DOE-2 Command	SPACE
DOE-2 Keyword(s)	SCHEDULE
Input Type	Prescribed
Tradeoffs	Neutral
Modeling Rules for Proposed Design:	~~ACMs shall use the weekly schedules in Tables 2-4 and 2-5for nonresidential and hotel/motel occupancies respectively.~~ Schedules are specified in Table N2-4. For high-rise residential occupancies, ACMs shall require the user to enter whether the proposed design uses setback or non-setback thermostats for heating. ACMs shall use either Table N2-7 or Table N2-8 depending on whether the building uses setback thermostats for heating or uses non-setback thermostats.
Modeling Rules for ~~Reference~~Standard Design (All):	The standard design shall use the same weekly schedules as the proposed design for nonresidential, retail, and hotel/motel occupancies. For high-rise residential occupancies the standard design shall use the weekly schedules in Table N2-7 assuming setback thermostats for the heating mode.

Table N2-4 – Schedule Types of Occupancies & Sub-Occupancies

Occupancy or Sub-Occupancy Type	Schedule
Atrium	Table 2-4 Nonresidential
Auditorium	Table 2-4: Nonresidential
Auto Repair ~~Workshop~~	Table 2-4: Nonresidential
~~Bank/Financial Transaction~~ Institution	~~Table 2-4: Nonresidential~~
Bar, Cocktail Lounge and Casino	Table 2-4: Nonresidential
Barber and Beauty Shop	Table 2-4: Nonresidential
Classrooms, Lecture, Training, Vocational Room	Table 2-4: Nonresidential
~~Courtrooms~~	~~Table 2-4: Nonresidential~~
Civic Meeting Space	Table 2-4: Nonresidential
Commercial and ~~/~~Industrial Storage	Table 2-4: Nonresidential
Convention, Conference, Multipurpose, and Meeting Centers	Table 2-4: Nonresidential
Corridors, Restrooms, Stairs, and Support Areas	Table 2-4: Nonresidential
Dining ~~Area~~	Table 2-4: Nonresidential
Electrical, ~~and~~ Mechanical Room	Table 2-4: Nonresidential
Exercise ~~ing~~ Center, ~~s~~ ~~and~~ Gymnasium	Table 2-4: Nonresidential
Exhibit, ~~Display Area and~~ Museum	Table 2-4: Nonresidential
Financial Transaction	Table 2-4: Nonresidential
~~General Commercial and /Industrial Work, High Bay -General~~	~~Table 2-4: Nonresidential~~
~~General Commercial and /Industrial Work, Low Bay~~	~~Table 2-4: Nonresidential~~
~~General Commercial and /Industrial Work, -Precision~~	~~Table 2-4: Nonresidential~~
Dry Cleaning (Coin Operated)	Table 2-4: Nonresidential
Dry Cleaning (Full Service Commercial)	Table 2-4: Nonresidential
General Commercial and Industrial Work, High Bay	Table 2-4: Nonresidential
General Commercial and Industrial Work, Low Bay	Table 2-4: Nonresidential
General Commercial and Industrial Work, Precision	Table 2-4: Nonresidential
Grocery Sales ~~Area~~	Table 2-4: Nonresidential
~~Housing, Public and Commons Areas, Multi-family without Setback Thermostat~~	~~Table 2-6: Residential / with Setback~~
~~Housing, Public and Commons Areas, Dormitory, Senior Housing without Setback Thermostat~~	~~Table 2-7: Residential / without Setback~~
High-rise Residential with Setback Thermostat	Table 2-6: Residential / with Setback
High-rise Residential without Setback Thermostat	Table 2-7: Residential / without Setback
Hotel Function Area	Table 2-5: Hotel Function
Hotel/Motel Guest Room with Setback Thermostat	Table 2-6: Residential / with Setback
Hotel/Motel Guest Room without Setback Thermostat	Table 2-7: Residential / without Setback
Housing, Public and Commons Areas, Multi-family with Setback Thermostat	Table 2-6: Residential / with Setback
Housing, Public and Commons Areas, Multi-family without Setback Thermostat	Table 2-7: Residential / without Setback
Housing, Public and Common Areas, Dormitory, Senior Housing with Setback Thermostat	Table 2-6: Residential / with Setback
Housing, Public and Commons Areas, Dormitory, Senior Housing without Setback Thermostat	Table 2-7: Residential / without Setback
Kitchen, ~~and~~ Food Preparation	Table 2-4: Nonresidential
Laundry	Table 2-4: Nonresidential
Library, ~~–~~ Reading Areas	Table 2-4: Nonresidential
Library, ~~–~~ Stacks	Table 2-4: Nonresidential

Occupancy or Sub-Occupancy Type	Schedule
Lobby, ~~–~~ Hotel	Table 2-5: Hotel Function
Lobby, ~~–~~ Main Entry ~~and Assembly~~	Table 2-4: Nonresidential
~~Lobby, - Office Reception/Waiting~~	~~Table 2-4: Nonresidential~~
Locker ~~and~~ /Dressing Room	Table 2-4: Nonresidential
Lounge, Recreation	Table 2-4: Nonresidential
Mall~~s, Mall, Arcade and Atrium~~	Table 2-7 Retail ~~Table 2-4: Nonresidential~~
Medical and Clinical Care	Table 2-4: Nonresidential
Office	Table 2-4: Nonresidential
~~Parking Garage~~	~~Table 2-4: Nonresidential~~
Police Station and Fire Station	Table 2-4: Nonresidential
Religious Worship	Table 2-4: Nonresidential
Retail Merchandise Sales, ~~and~~ Wholesale Showroom	Table 2-8: Retail ~~Table 2-4: Nonresidential~~
Tenant Lease Space	Table 2-4: Nonresidential
~~Transportation Function~~	~~Table 2-4: Nonresidential~~
~~Smoking Lounge~~	~~Table 2-4: Nonresidential~~
Theater, ~~(~~Motion Picture~~)~~	Table 2-4: Nonresidential
Theater, ~~(~~Performance~~)~~	Table 2-4: Nonresidential
Transportation Function	Table 2-4: Nonresidential
Waiting Area	Table 2-4: Nonresidential
All Other	Table 2-4: Nonresidential
~~Unknown~~	~~Table 2-4: Nonresidential~~

Table N2-5 – Nonresidential Occupancy Schedules (Other than Retail)

		Hour																							
		1	2	3	4	5	6	7	8	9	10	11	12	13	14	15	16	17	18	19	20	21	22	23	24
Heating (ºF)	WD	60	60	60	60	60	65	65	70	70	70	70	70	70	70	70	70	70	70	65	60	60	60	60	60
	SAT	60	60	60	60	60	65	65	65	65	65	65	65	65	65	65	65	60	60	60	60	60	60	60	60
	Sun	60	60	60	60	60	65	65	65	65	65	65	65	65	65	65	65	60	60	60	60	60	60	60	60
Cooling (ºF)	WD	77	77	77	77	77	73	73	73	73	73	73	73	73	73	73	73	73	73	77	77	77	77	77	77
	SAT	77	77	77	77	77	73	73	73	73	73	73	73	73	73	73	73	73	73	77	77	77	77	77	77
	Sun	77	77	77	77	77	73	73	73	73	73	73	73	73	73	73	73	73	73	77	77	77	77	77	77
Lights (%)	WD	5	5	5	5	10	20	40	70	80	85	85	85	85	85	85	85	85	80	35	10	10	10	10	10
	SAT	5	5	5	5	5	10	15	25	25	25	25	25	25	25	20	20	20	15	10	10	10	10	10	10
	Sun	5	5	5	5	5	10	10	15	15	15	15	15	15	15	15	15	15	10	10	10	5	5	5	5
Equipment (%)	WD	15	15	15	15	15	20	35	60	70	70	70	70	70	70	70	70	65	45	30	20	20	15	15	15
	SAT	15	15	15	15	15	15	15	20	25	25	25	25	25	25	20	20	20	15	15	15	15	15	15	15
	Sun	15	15	15	15	15	15	15	20	20	20	20	20	20	20	20	20	20	15	15	15	15	15	15	15
Fans (%)	WD	off	off	off	off	off	on	on	on	on	on	on	on	on	on	on	on	on	on	on	on	off	off	off	off
	SAT	off	off	off	off	off	on	on	on	on	on	on	on	on	on	on	off	off	off	off	off	off	off	off	off
	Sun	off	off	off	off	off	off	off	off	off	off	off	off	off	off	off	off	off	off	off	off	off	off	off	off
Infiltration (%)	WD	100	100	100	100	100	0	0	0	0	0	0	0	0	0	0	0	0	0	0	0	100	100	100	100
	SAT	100	100	100	100	100	0	0	0	0	0	0	0	0	0	0	100	100	100	100	100	100	100	100	100
	Sun	100	100	100	100	100	100	100	100	100	100	100	100	100	100	100	100	100	100	100	100	100	100	100	100
People (%)	WD	0	0	0	0	5	10	25	65	65	65	65	60	60	65	65	65	65	40	25	10	5	5	5	0
	SAT	0	0	0	0	0	0	5	15	15	15	15	15	15	15	15	15	15	5	5	5	0	0	0	0

	Sun	0	0	0	0	0	0	0	5	5	5	5	5	5	5	5	5	5	5	5	0	0	0	0
Hot Water (%)	WD	0	0	0	0	10	10	50	50	50	50	70	90	90	50	50	70	50	50	50	10	10	10	10	0
	SAT	0	0	0	0	0	0	10	20	20	20	20	20	20	20	20	20	20	10	10	10	0	0	0	0
	Sun	0	0	0	0	0	0	0	10	10	10	10	10	10	10	10	10	10	10	10	10	0	0	0	0

	Hour																							
	1	2	3	4	5	6	7	8	9	10	11	12	13	14	15	16	17	18	19	20	21	22	23	24
HEATING (°F)																								
Weekday	55	55	55	55	55	63	68	70	70	70	70	70	70	70	70	70	70	70	70	55	55	55	55	55
Saturday	55	55	55	55	55	63	68	70	70	70	70	70	70	70	55	55	55	55	55	55	55	55	55	55
Sunday	55	55	55	55	55	55	55	55	55	55	55	55	55	55	55	55	55	55	55	55	55	55	55	55
COOLING (°F)																								
Weekday	95	95	95	95	95	74	74	74	74	74	74	74	74	74	74	74	74	74	74	74	95	95	95	95
Saturday	95	95	95	95	95	74	74	74	74	74	74	74	74	74	74	95	95	95	95	95	95	95	95	95
Sunday	95	95	95	95	95	95	95	95	95	95	95	95	95	95	95	95	95	95	95	95	95	95	95	95
LIGHTS (%)																								
Weekday	5	5	5	5	5	5	5	5	90	90	90	90	90	90	90	90	90	90	40	5	5	5	5	5
Saturday	5	5	5	5	5	5	5	5	90	90	90	90	40	30	5	5	5	5	5	5	5	5	5	5
Sunday	5	5	5	5	5	5	5	5	5	5	5	5	5	5	5	5	5	5	5	5	5	5	5	5
EQUIPMENT (%)																								
Weekday	5	5	5	5	5	5	5	5	50	50	50	50	30	50	50	50	50	50	35	5	5	5	5	5
Saturday	5	5	5	5	5	5	5	5	25	25	25	25	25	15	5	5	5	5	5	5	5	5	5	5
Sunday	5	5	5	5	5	5	5	5	5	5	5	5	5	5	5	5	5	5	5	5	5	5	5	5
FANS (%)																								
Weekday	off	off	off	off	off	on	on	on	on	on	on	on	on	on	on	on	on	on	on	on	off	off	off	off
Saturday	off	off	off	off	off	on	on	on	on	on	on	on	on	on	on	off	off	off	off	off	off	off	off	off
Sunday	off	off	off	off	off	off	off	off	off	off	off	off	off	off	off	off	off	off	off	off	off	off	off	off
INFILTRATION (%)																								
Weekday	100	100	100	100	100	0	0	0	0	0	0	0	0	0	0	0	0	0	0	0	100	100	100	100
Saturday	100	100	100	100	100	0	0	0	0	0	0	0	0	0	0	100	100	100	100	100	100	100	100	100
Sunday	100	100	100	100	100	100	100	100	100	100	100	100	100	100	100	100	100	100	100	100	100	100	100	100
PEOPLE (%)																								
Weekday	0	0	0	0	0	0	0	5	50	50	50	30	30	50	50	50	50	50	30	0	0	0	0	0
Saturday	0	0	0	0	0	0	0	5	15	15	15	15	5	5	0	0	0	0	0	0	0	0	0	0
Sunday	0	0	0	0	0	0	0	0	0	0	0	0	0	0	0	0	0	0	0	0	0	0	0	0
HOT WATER (%)																								
Weekday	0	0	0	0	0	0	0	10	50	50	70	90	90	50	50	70	50	50	10	0	0	0	0	0
Saturday	0	0	0	0	0	0	0	10	10	20	20	20	10	10	0	0	0	0	0	0	0	0	0	0
Sunday	0	0	0	0	0	0	0	0	0	0	0	0	0	0	0	0	0	0	0	0	0	0	0	0

Table N2-6 – Hotel Function Occupancy Schedules

		Hour																							
		1	2	3	4	5	6	7	8	9	10	11	12	13	14	15	16	17	18	19	20	21	22	23	24
Heating (ºF)	WD	55	55	55	55	55	55	63	68	70	70	70	70	70	70	70	70	70	70	70	70	70	70	55	55
	SAT	55	55	55	55	55	55	63	68	70	70	70	70	70	70	70	70	70	70	70	70	70	70	55	55
	Sun	55	55	55	55	55	55	63	68	70	70	70	70	70	70	70	70	70	70	70	70	70	70	55	55
Cooling (ºF)	WD	95	95	95	95	95	95	95	95	74	74	74	74	74	74	74	74	74	74	74	74	74	74	74	95
	SAT	95	95	95	95	95	95	95	95	74	74	74	74	74	74	74	74	74	74	74	74	74	74	74	95
	Sun	95	95	95	95	95	95	95	95	74	74	74	74	74	74	74	74	74	74	74	74	74	74	74	95
Lights (%)	WD	5	5	5	5	5	5	5	5	25	50	90	90	90	90	90	90	75	50	50	50	50	10	5	5
	SAT	5	5	5	5	5	5	5	5	25	50	90	90	90	90	90	90	75	50	50	50	50	10	5	5
	Sun	5	5	5	5	5	5	5	5	25	50	90	90	90	90	90	90	75	50	50	50	50	10	5	5
Equipment (%)	WD	5	5	5	5	5	5	5	5	50	50	50	50	30	50	50	50	30	10	30	30	30	10	5	5
	SAT	5	5	5	5	5	5	5	5	50	50	50	50	30	50	50	50	30	10	30	30	30	10	5	5
	Sun	5	5	5	5	5	5	5	5	50	50	50	50	30	50	50	50	30	10	30	30	30	10	5	5
Fans (%)	WD	off	off	off	off	off	off	on	on	on	on	on	on	on	on	on	on	on	on	on	on	on	on	on	off
	SAT	off	off	off	off	off	off	on	on	on	on	on	on	on	on	on	on	on	on	on	on	on	on	on	off
	Sun	off	off	off	off	off	off	on	on	on	on	on	on	on	on	on	on	on	on	on	on	on	on	on	off
Infiltration (%)	WD	100	100	100	100	100	100	0	0	0	0	0	0	0	0	0	0	0	0	0	0	0	0	0	100
	SAT	100	100	100	100	100	100	0	0	0	0	0	0	0	0	0	0	0	0	0	0	0	0	0	100
	Sun	100	100	100	100	100	100	0	0	0	0	0	0	0	0	0	0	0	0	0	0	0	0	0	100
People (%)	WD	0	0	0	0	0	0	0	5	35	90	90	90	25	90	90	90	50	25	50	50	50	10	0	0
	SAT	0	0	0	0	0	0	0	5	35	90	90	90	25	90	90	90	50	25	50	50	50	10	0	0
	Sun	0	0	0	0	0	0	0	5	35	90	90	90	25	90	90	90	50	25	50	50	50	10	0	0
Hot Water (%)	WD	0	0	0	0	0	0	10	40	40	60	60	60	90	60	60	60	60	40	50	50	50	10	0	0
	SAT	0	0	0	0	0	0	10	40	40	60	60	60	90	60	60	60	60	40	50	50	50	10	0	0
	Sun	0	0	0	0	0	0	10	40	40	60	60	60	90	60	60	60	60	40	50	50	50	10	0	0

Table N2-7 – Residential Occupancy Schedules (Including Hotel/Motel Guest Rooms) With Setback Thermostat For Heating

		Hour																							
		1	2	3	4	5	6	7	8	9	10	11	12	13	14	15	16	17	18	19	20	21	22	23	24
Heating (ºF)	WD	60	60	60	60	60	60	68	68	68	68	68	68	68	68	68	68	68	68	68	68	68	68	60	60
	SAT	60	60	60	60	60	60	68	68	68	68	68	68	68	68	68	68	68	68	68	68	68	68	60	60
	Sun	60	60	60	60	60	60	68	68	68	68	68	68	68	68	68	68	68	68	68	68	68	68	60	60
Cooling (ºF)	WD	78	78	78	78	78	78	78	78	78	78	78	78	78	78	78	78	78	78	78	78	78	78	78	78
	SAT	78	78	78	78	78	78	78	78	78	78	78	78	78	78	78	78	78	78	78	78	78	78	78	78
	Sun	78	78	78	78	78	78	78	78	78	78	78	78	78	78	78	78	78	78	78	78	78	78	78	78
Lights (%)	WD	10	10	10	10	10	30	45	45	45	45	30	30	30	30	30	30	30	30	60	80	90	80	60	30
	SAT	10	10	10	10	10	30	45	45	45	45	30	30	30	30	30	30	30	30	60	80	90	80	60	30
	Sun	10	10	10	10	10	30	45	45	45	45	30	30	30	30	30	30	30	30	60	80	90	80	60	30
Equipment (%)	WD	10	10	10	10	10	30	45	45	45	45	30	30	30	30	30	30	30	30	60	80	90	80	60	30
	SAT	10	10	10	10	10	30	45	45	45	45	30	30	30	30	30	30	30	30	60	80	90	80	60	30
	Sun	10	10	10	10	10	30	45	45	45	45	30	30	30	30	30	30	30	30	60	80	90	80	60	30
Fans (%)	WD	on	on	on	on	on	on	on	on	on	on	on	on	on	on	on	on	on	on	on	on	on	on	on	on
	SAT	on	on	on	on	on	on	on	on	on	on	on	on	on	on	on	on	on	on	on	on	on	on	on	on
	Sun	on	on	on	on	on	on	on	on	on	on	on	on	on	on	on	on	on	on	on	on	on	on	on	on
Infiltration (%)	WD	100	100	100	100	100	100	100	100	100	100	100	100	100	100	100	100	100	100	100	100	100	100	100	100
	SAT	100	100	100	100	100	100	100	100	100	100	100	100	100	100	100	100	100	100	100	100	100	100	100	100
	Sun	100	100	100	100	100	100	100	100	100	100	100	100	100	100	100	100	100	100	100	100	100	100	100	100
People (%)	WD	90	90	90	90	90	90	70	40	40	20	20	20	20	20	20	30	50	50	50	70	70	80	90	90
	SAT	90	90	90	90	90	90	70	40	40	20	20	20	20	20	20	30	50	50	50	70	70	80	90	90
	Sun	90	90	90	90	90	90	70	40	40	20	20	20	20	20	20	30	50	50	50	70	70	80	90	90
Hot Water (%)	WD	0	0	0	5	5	5	80	70	50	40	25	25	25	25	50	60	70	70	40	25	20	20	5	5
	SAT	0	0	0	5	5	5	80	70	50	40	25	25	25	25	50	60	70	70	40	25	20	20	5	5
	Sun	0	0	0	5	5	5	80	70	50	40	25	25	25	25	50	60	70	70	40	25	20	20	5	5

Table N2-8 – Residential Occupancy Schedules (Including Hotel/Motel Guest Rooms) Without Setback Thermostat

		Hour																							
		1	2	3	4	5	6	7	8	9	10	11	12	13	14	15	16	17	18	19	20	21	22	23	24
Heating (ºF)	WD	68	68	68	68	68	68	68	68	68	68	68	68	68	68	68	68	68	68	68	68	68	68	68	68
	SAT	68	68	68	68	68	68	68	68	68	68	68	68	68	68	68	68	68	68	68	68	68	68	68	68
	Sun	68	68	68	68	68	68	68	68	68	68	68	68	68	68	68	68	68	68	68	68	68	68	68	68
Cooling (ºF)	WD	78	78	78	78	78	78	78	78	78	78	78	78	78	78	78	78	78	78	78	78	78	78	78	78
	SAT	78	78	78	78	78	78	78	78	78	78	78	78	78	78	78	78	78	78	78	78	78	78	78	78
	Sun	78	78	78	78	78	78	78	78	78	78	78	78	78	78	78	78	78	78	78	78	78	78	78	78
Lights (%)	WD	10	10	10	10	10	30	45	45	45	45	30	30	30	30	30	30	30	30	60	80	90	80	60	30
	SAT	10	10	10	10	10	30	45	45	45	45	30	30	30	30	30	30	30	30	60	80	90	80	60	30
	Sun	10	10	10	10	10	30	45	45	45	45	30	30	30	30	30	30	30	30	60	80	90	80	60	30
Equipment (%)	WD	10	10	10	10	10	30	45	45	45	45	30	30	30	30	30	30	30	30	60	80	90	80	60	30
	SAT	10	10	10	10	10	30	45	45	45	45	30	30	30	30	30	30	30	30	60	80	90	80	60	30
	Sun	10	10	10	10	10	30	45	45	45	45	30	30	30	30	30	30	30	30	60	80	90	80	60	30
Fans (%)	WD	on	on	on	on	on	on	on	on	on	on	on	on	on	on	on	on	on	on	on	on	on	on	on	on
	SAT	on	on	on	on	on	on	on	on	on	on	on	on	on	on	on	on	on	on	on	on	on	on	on	on
	Sun	on	on	on	on	on	on	on	on	on	on	on	on	on	on	on	on	on	on	on	on	on	on	on	on
Infiltration (%)	WD	100	100	100	100	100	100	100	100	100	100	100	100	100	100	100	100	100	100	100	100	100	100	100	100
	SAT	100	100	100	100	100	100	100	100	100	100	100	100	100	100	100	100	100	100	100	100	100	100	100	100
	Sun	100	100	100	100	100	100	100	100	100	100	100	100	100	100	100	100	100	100	100	100	100	100	100	100
People (%)	WD	90	90	90	90	90	90	70	40	40	20	20	20	20	20	20	30	50	50	50	70	70	80	90	90
	SAT	90	90	90	90	90	90	70	40	40	20	20	20	20	20	20	30	50	50	50	70	70	80	90	90
	Sun	90	90	90	90	90	90	70	40	40	20	20	20	20	20	20	30	50	50	50	70	70	80	90	90
Hot Water (%)	WD	0	0	0	5	5	5	80	70	50	40	25	25	25	25	50	60	70	70	40	25	20	20	5	5
	SAT	0	0	0	5	5	5	80	70	50	40	25	25	25	25	50	60	70	70	40	25	20	20	5	5
	Sun	0	0	0	5	5	5	80	70	50	40	25	25	25	25	50	60	70	70	40	25	20	20	5	5

Table N2-9 – Retail Occupancy Schedules

		Hour																							
		1	2	3	4	5	6	7	8	9	10	11	12	13	14	15	16	17	18	19	20	21	22	23	24
Heating (ºF)	WD	60	60	60	60	60	63	65	68	70	70	70	70	70	70	70	70	70	70	70	65	65	65	65	60
	SAT	60	60	60	60	60	63	65	68	70	70	70	70	70	70	70	70	70	70	70	65	65	65	65	60
	Sun	60	60	60	60	60	63	65	68	70	70	70	70	70	70	70	70	70	70	70	65	65	65	65	60
Cooling (ºF)	WD	80	80	80	80	80	74	74	74	74	74	74	74	74	74	74	74	74	74	74	74	74	74	80	80
	SAT	80	80	80	80	80	74	74	74	74	74	74	74	74	74	74	74	74	74	74	74	74	74	80	80
	Sun	80	80	80	80	80	74	74	74	74	74	74	74	74	74	74	74	74	74	74	74	74	74	80	80
Lights (%)	WD	20	20	20	20	20	30	40	65	90	90	90	90	90	90	90	90	90	90	90	80	65	50	35	25
	SAT	20	20	20	20	20	30	40	65	90	90	90	90	90	90	90	90	90	90	90	80	65	50	35	25
	Sun	20	20	20	20	20	30	40	65	90	90	90	90	90	90	90	90	90	90	90	80	65	50	35	25
Equipment (%)	WD	20	20	20	20	20	25	30	45	60	75	75	75	70	75	75	75	75	75	65	55	45	35	25	20
	SAT	20	20	20	20	20	25	30	45	60	75	75	75	70	75	75	75	75	75	65	55	45	35	25	20
	Sun	20	20	20	20	20	25	30	45	60	75	75	75	70	75	75	75	75	75	65	55	45	35	25	20
Fans (%)	WD	off	off	off	off	off	off	On	on	on	on	on	on	on	on	on	on	on	on	on	on	on	off	off	off
	SAT	off	off	off	off	off	off	On	on	on	on	on	on	on	on	on	on	on	on	on	on	on	off	off	off
	Sun	off	off	off	Off	off	off	On	on	on	on	on	on	on	on	on	on	on	on	on	on	on	off	off	off
Infiltration (%)	WD	100	100	100	100	100	100	0	0	0	0	0	0	0	0	0	0	0	0	0	0	0	100	100	100
	SAT	100	100	100	100	100	100	0	0	0	0	0	0	0	0	0	0	0	0	0	0	0	100	100	100
	Sun	100	100	100	100	100	100	0	0	0	0	0	0	0	0	0	0	0	0	0	0	0	100	100	100
People (%)	WD	05	05	05	05	05	05	15	25	40	55	75	75	75	75	75	75	75	75	65	50	35	20	10	5
	SAT	05	05	05	05	05	05	15	25	40	55	75	75	75	75	75	75	75	75	65	50	35	20	10	5
	Sun	05	05	05	05	05	05	15	25	40	55	75	75	75	75	75	75	75	75	65	50	35	20	10	5
Hot Water (%)	WD	0	0	0	0	0	0	10	10	50	50	70	90	90	50	50	70	50	50	50	10	10	0	0	0
	SAT	0	0	0	0	0	0	10	10	50	50	70	90	90	50	50	70	50	50	50	10	10	0	0	0
	Sun	0	0	0	0	0	0	10	10	50	50	70	90	90	50	50	70	50	50	50	10	10	0	0	0

1.4.3.3 Holiday Schedules

Description

The reference method has Weekdays, Saturdays and Sundays schedules which includes holidays. The 1991 calendar year is a fixed input, with January 1st being a Tuesday and no leap year. The ~~, and the~~ following holidays observed in the simulation:

New Year's Day	Tuesday, January 1
Martin Luther King's Birthday	Monday, January 21
Washington's Birthday	Monday, February 18
Memorial Day	Monday, May 27
Independence Day	Thursday, July 4
Columbus Day	Monday, October 14
Veteran's Day	Monday, November 11
Thanksgiving Day	Thursday, November 28
Christmas Day	Wednesday, December 25

DOE-2 Command

DOE-2 Keyword(s) SCHEDULE

Input Type Prescribed

Tradeoffs Neutral

Modeling Rules for Proposed Design: The proposed design shall use the Sunday occupancy schedule for the above holidays.

Modeling Rules for ~~Reference~~Standard Design (All): The ~~reference design~~standard design shall use the same schedule as the proposed design.

~~2.~~41.5 HVAC Systems ~~&~~ and Plants ~~Building - Required Capabilities~~

ACMs ~~must~~shall have the capability to accept input for and model various types of HVAC systems. In central systems, these modeling features affect the ~~system~~ loads seen by the plant. A key factor related to equipment type is the energy source (electricity, natural gas, ~~fuel oil,~~ or ~~LPG~~propane). ~~For electric systems,~~ ACMs ~~must~~shall correctly apply the TDV multiplier from Joint Appendix III for each fuel source, building type and climate zone ~~source multiplier (for example, 1 kWh = 10,239 source Btu) as stated in Table No. 1-B of the Standards~~.

~~Minimum ACM requirements for equipment that are typically used in larger systems, such as chillers, boilers, pumps and service water heaters, are described in this section.~~

Standard design requirements are labeled as applicable to one of the following options:

- Existing unchanged
- Altered existing
- New
- All

with the default condition for these four specified conditions being "All." An ACM without the optional capability of analyzing additions or alterations ~~must~~shall classify and report all ~~surfaces~~ HVAC components as "All."

~~2.4.1~~1.5.1 Thermal Zoning

Description:	A space or collection of spaces within a building having sufficiently similar space-conditioning requirements that those conditions could be maintained with a single controlling device. ACMs ~~must~~shall accept input for and be capable of modeling a minimum of fifty (50) thermal zones, each with its own ~~thermostatic~~ control. ACMs ~~must~~shall also be capable of reporting the ~~require a building level input for the~~ number of ~~thermostats~~ control points at the building level. ~~-~~When the number of ~~thermostats~~ control points is not greater than twenty (20) the ACM ~~must~~shall have one HVAC zone per ~~thermostat~~ control point. An ACM may use zone multipliers for identical zones. When the number of zones exceeds twenty, then (and only then) thermal zones may be combined subject to a variety of rules and restrictions. See Chapter 4 for details on restrictions on combining thermal zones and requirements for zoning buildings for which no HVAC permit is sought.
DOE-2 Command	ZONE
DOE-2 Keyword(s)	ZONE-TYPE
Input Type	Prescribed
Tradeoffs	Neutral
Modeling Rules for Proposed Design:	The reference method models thermal zones as input by the user, according to the plans and specifications for the building. If ~~no~~ thermal zones ~~may~~ can not be determined from ~~are shown on~~ the building plans, thermal zones shall be established ~~ACMs shall inform the user to follow the~~ from guidelines ~~described~~ in ~~Chapter 4 Compliance Supplement~~the ACM User's Manual and Help System (see Chapter 4). ~~These guidelines must be included in the ACM's Compliance Supplement and repeated in the user's manual. It is not adequate or appropriate to reference this manual to relay this information to the user. The absence of such information and modeling rules in the ACM's user documentation is sufficient grounds for rejecting an ACM for compliance use.~~
Modeling Rules for ~~Reference~~Standard Design (All):	ACMs shall model the thermal zones of the ~~reference design~~standard design in the same manner as they are modeled in the proposed design.

~~2.4.2~~1.5.2 Heating & Cooling Equipment

1.5.2.1 Primary Systems

The ACM ~~must~~shall be able to model the following primary systems:

- *Hydronic*. Primary system cooling/heating coil served by a central hydronic system.
- *Electric*. Primary system heating using electric resistance.
- *Fossil fuel furnace*. Primary system heating by a fossil fuel fired furnace.
- *Heat pump*. Primary system heating provided by direct expansion refrigerant coils served by a heat pump.
- *DX (Direct Expansion)*. Primary system cooling provided by direct expansion refrigerant coils served by a heat pump or other compression system.

1.5.2.2 Cooling Equipment

The ACM ~~must~~shall account for variations in cooling equipment efficiency and capacity. ACMs will be compared to and tested against a reference method that also accounts for variations in efficiency and capacity

as a function of part-load ratio and heat transfer fluid (e.g., chilled water, condenser water, outside air for air-cooled systems) temperatures. The ACM user ~~must~~shall be able to explicitly enter equipment type and capacity and standard efficiency ratings (such as SEER and/or EER for packaged equipment).

In certain cases the Standards allow cooling equipment to be installed below the mandatory minimum efficiency ratings listed in the Standards for new currently manufactured equipment, e.g. existing equipment moved to a new location in the building. If an ACM allows efficiencies to be entered (optional entry and capability) lower than those indicated in the mandatory features for newly manufactured equipment, then those entries ~~must~~shall also be indicated in the exceptional conditions checklist on the PERF-1 and be justified in writing.

ACMs ~~must~~shall model two fundamental types of cooling equipment:

1. Water chillers. Cooling equipment that chills water to be supplied to building coils.
2. *Direct expansion (DX) compressors.* Cooling systems that directly cool supply air without first cooling a heat transfer medium such as water. See descriptions above for other definitions.

The reference method models part-load performance for at least two different types of water chillers and all ACMs ~~must~~shall allow the user to select either of these two chiller types:

1. *Centrifugal.* Compression refrigeration system using rotary centrifugal compressor.
2. *Reciprocating.* Compression refrigeration system using reciprocating positive displacement compressor.

1.5.2.3 Heating Equipment

The ACM ~~must~~shall account for variations in heating equipment performance according to efficiency and as a function of load. The user ~~must~~shall be able to explicitly enter equipment type and capacity and rated efficiency (such as AFUE, Steady State Thermal Efficiency or HSPF).

In certain cases the Standards allow heating equipment to be installed below the mandatory minimum efficiency ratings listed in the Standards for new currently manufactured equipment, e.g. existing equipment moved to a new location in the building. If an ACM allows efficiencies to be entered (optional entry and capability) lower than those indicated in the mandatory features for newly manufactured equipment, those entries ~~must~~shall also be indicated in the exceptional conditions checklist on the PERF-1 and be justified in writing.

ACMs ~~must~~shall model three fundamental types of heating equipment:

1. *Furnaces.* The following forced air furnaces ~~must~~shall be provided:
   - *Electric.* Electric resistance elements used as the heating source.
   - *Fossil Fuel*. Natural gas or liquid propane is used as the heating source.
2. *Boilers*. The following capabilities ~~must~~shall be provided for boilers:
   - *Electric*. Boiler uses electric resistance heating.
   - *Fossil Fuel*. Boiler is natural gas or oil fired.
   - *Natural draft*. Fossil fired boiler uses natural draft (atmospheric) venting.
   - *Forced/induced draft*. Fossil fired boiler uses fan forced or induced draft venting. With this option, the ACM ~~must~~shall account for fan energy.
   - *Hot water*. Boiler produces hot water.

~~2~~ 3. *Heat Pumps*. Supply air is heated through direct expansion process utilizing electricity as the fuel type and outside air as the heat source.

1.5.2.4 Standard Design Systems

Description: The reference method will assign one of five Standard Design System types for all

proposed HVAC systems in order to establish an energy budget for the standard building. This system is generated and modeled for all buildings, even if no mechanical heating or cooling is included in the building permit.

ACMs ~~must~~shall require the user to input the following for each system:

1. **Building Type** - low-rise nonresidential, high-rise nonresidential, residential and hotel/motel guest room
2. **System Type** - single zone, multiple zone
3. **Heating Source** - fossil fuel, electricity
4. **Cooling Source** - hydronic, other (for high-rise residential and hotel/motel guest room, only)

~~The following definitions apply to the terms listed above:~~

~~*Low-rise nonresidential*: A building which is of occupancy group A, B, E, or H with three or less habitable stories.~~

~~*High-rise nonresidential*: A building which is of occupancy group A, B, E, or H with four or more habitable stories.~~

~~*High-rise residential*: A building, other than a hotel/motel, of occupancy group R-1 with four or more habitable stories~~

~~*Hotel and motel guest room*: The guest rooms of a Hotel/Motel as defined in Section 101(b) of the Standards.~~

~~*Single zone*: A supply fan (and optionally a return fan) with heating and cooling heat exchangers (e.g. DX coil, chilled water coil, hot water coil, furnace, electric heater) that serves a single thermostatic zone. This system may or may not be constant volume.~~

~~*Multiple zone*: A supply fan (and optionally a return fan) with heating and/or cooling heat exchangers (e.g. DX coil, chilled water coil, hot water coil, furnace, electric heater) that serves more than one thermostatic zone. Zones are thermostatically controlled by features including but not limited to variable volume, reheat, recool and concurrent operation of another system.~~

~~*Fossil fuel*: At least one source system heat is from a fossil fuel such as gas, oil, or coal.~~

~~*Electric*: Heating source is from electrically powered systems only such as electric resistance, heat pumps with no auxiliary heat or with electric auxiliary heat, solar with electric back-up, etc.~~

~~*Hydronic*: Any cooling system which uses water or a water solution as a source of cooling or heat rejection, including chilled water systems (both air and water-cooled) as well as water-cooled or evaporatively cooled direct expansion systems such as water source (water-to-air) heat pumps.~~

All ACMs ~~must~~shall accept input for and be able to model the following system types for both the standard and proposed design:

- **System 1**: Packaged Single Zone (PSZ), Gas furnace and electric air conditioner.
- **System 2**: Packaged Single Zone (PHP), Electric heat pump and air conditioner.
- **System 3**: Packaged Variable Air Volume (PVAV), Central gas boiler with hydronic reheat and electric air conditioner.

	• **System 4**: Built-up Variable Air Volume (VAV), Central gas boiler with hydronic reheat and central electric chiller with hydronic air conditioning. • **System 5**: Four-pipe fan coil (FPFC), Central gas boiler and electric chiller serving individual units with hydronic heating and cooling coils.
DOE-2 Command	SYSTEM
DOE-2 Keyword(s)	SYSTEM-TYPE
Input Type	Prescribed
Tradeoffs	N/A
Modeling Rules for Proposed Design:	The proposed system shall be input as it is shown in the construction documents for the building. ACMs ~~must~~shall receive enough input about the proposed system to: 1) generate the applicable standard design system; 2) apply all required efficiency descriptors to both the standard and proposed designs; and, 3) model the energy use of the proposed design accurately.
Modeling Rules for ~~Reference~~Standard Design (New):	The ~~reference design~~standard design system selection is shown in Table N2-10~~Figure 2-1~~. The reference method chooses the standard HVAC system only from the five minimum systems listed above. The reference method will select its standard system according to Table N2-10~~Figure 2-1~~, for the standard design system, regardless of the system type chosen for the proposed design. For example, a hydronic heating system served by a gas-fired boiler to supply hot water to the loop for a low-rise nonresidential building is considered a single zone (fan) system with fossil fuel for a heating source, and would be compared to System #1 - a Packaged Single Zone Gas/Electric System. Likewise a gas-fired absorption cooling system with a gas-fired furnace serving a single zone would be compared to System #1 also. Tables N2-11 ~~Figures 2-2a~~ through N2-14 ~~2-2d~~ describe the five standard design system types.
Modeling Rules for ~~Reference~~Standard Design (Existing Unchanged & Altered Existing):	The ~~reference design~~standard design shall model the existing system with its rated efficiency. If the entered efficiency is lower than those indicated in the mandatory features for newly manufactured equipment, then those entries ~~must~~shall also be indicated in the exceptional conditions checklist on the PERF-1 and be noted as existing system.

Table N2-10 –1 Standard Design System Selection Flowchart

Building Type	*System Type*	*Standard Proposed Design Heating Source*	*System*
Low-Rise Nonresidential	Single Zone	Fossil	System 1 – Packaged Single Zone, Gas/Electric
		Electric	System 2 – Packaged Single Zone, Heat Pump
	Multiple Zone	Any	System 3 – Packaged VAV, Gas Boiler with Reheat
High Rise Nonresidential	Single Zone	Any	System 5 – Four Pipe Fan Coil System with Central Plant
	Multiple Zone	Any	System 4 – Central VAV, Gas Boiler with Reheat
Residential & Hotel/Motel Guest Room	Hydronic	Any	System 5 – Four Pipe Fan Coil System with Central Plant
	Other	Fossil	System 1 (No economizer) – Packaged Single Zone, Gas/Electric
		Electric	System 2 (No economizer) – Packaged Single Zone, Heat Pump

Figure Table N2-112a – System #1 and System #2 Descriptions

System Description:	Packaged Single Zone with Gas Furnace/Electric Air Conditioning (#1) or Heat Pump (#2)
Supply Fan Power:	See Section 2.4.2.22.5.3.5
Supply Fan Control:	Constant volume
Min Supply Temp:	50 ≤ T ≤ 60 DEFAULT: 55
Cooling System:	Direct expansion (DX)
Cooling Efficiency:	Minimum SEER or EER based on equipment type and output capacity of proposed unit(s). Adjusted EER is calculated to account for supply fan energy.
Maximum Supply Temp:	85 ≤ T ≤ 110 DEFAULT: 100
Heating System:	Gas furnace (#1) or heat pump (#2)
Heating Efficiency:	Minimum AFUE, Thermal Efficiency, COP or HSPF based on equipment type and output capacity of proposed unit(s).
Economizer:	Integrated dry-bulb economizer, when mechanical cooling output capacity of the proposed design as modeled in the compliance run by the ACM is over 75,000 Btu/hr and fan system volumetric capacity of the proposed design as modeled in the compliance run by the ACM is over 2500 cfm
Ducts:	For ducts installed in unconditioned buffer spaces or outdoors as specified in Section 144(k) of the Standards between insulated ceiling and roof or exterior to the building, the duct system efficiency shall be as described in Section 2.5.3.182. 5.2.35.

Table~~Figure~~ N2-12~~2b~~ System #3 Description

System Description:	Packaged VAV with Boiler and Reheat
Supply Fan Power:	See Section ~~2.4.2.22~~2.5.3.5
Supply Fan Control:	Individual VAV supply fan with ~~25~~ less than 10 horsepower ~~and less~~:
	VAV - forward curved fan with discharge damper
	Individual VAV supply fan greater than or equal to ten ~~25~~ horsepower:
	VAV - variable speed drive
Return Fan Control:	Same as supply fan
Minimum Supply Temp:	50 ≤ T ≤ 60 DEFAULT: 55
Cooling System:	Direct expansion (DX)
Cooling Efficiency:	Minimum efficiency based on average proposed output capacity of equipment unit(s)
Maximum Supply Temp:	90 ≤ T ≤ 110 DEFAULT: 105
Heating System:	Gas boiler
Hot Water Pumping System	Variable flow (2-way valves) riding the pump curve
Heating Efficiency:	Minimum efficiency based on average proposed output capacity of equipment unit(s)
Economizer:	Integrated dry-bulb economizer, when mechanical cooling output capacity of the proposed design as modeled in the compliance run by the ACM is over 75,000 Btu/hr and fan system volumetric capacity of the proposed design as modeled in the compliance run by the ACM is over 2500 cfm

Table~~Figure~~ N2-13~~2c~~ System #4 Description

System Description:	Chilled Water VAV With Reheat
Supply Fan Power:	See Section ~~2.4.2.22~~2.5.3.5
Supply Fan Control:	Individual VAV supply fan with less than 10 ~~25~~ horsepower:~~and less~~:
	VAV - forward curved fan with discharge damper
	Individual VAV supply fan with greater than or equal to 10 ~~greater than 25~~ horsepower:
	VAV - variable speed drive
Return Fan Control:	Same as supply fan
Minimum Supply Temp:	50 ≤ T ≤ 60 DEFAULT: 55
Cooling System:	Chilled water
Chilled Water Pumping System	Variable flow (2-way valves) with a VSD on the pump if ~~more than~~ three or more ~~fewer~~ fan coils or air handlers. Constant volume flow with water temperature reset control if ~~fewer~~ less than three fan coils or air handlers.
Cooling Efficiency:	Minimum efficiency based on average proposed output capacity of equipment unit(s)
Maximum Supply Temp:	90 ≤ T ≤ 110 DEFAULT: 105
Heating System:	Gas boiler
Hot Water Pumping System	Variable flow (2-way valves) riding the pump curve if ~~more than~~ three or more ~~fewer~~ fan coils or air handlers. Constant volume flow with water temperature reset control if ~~fewer~~ less than three fan coils or air handlers.
Heating Efficiency:	Minimum efficiency based on average proposed output capacity of equipment unit(s)
Economizer:	Integrated dry-bulb economizer, when mechanical cooling output capacity of the proposed design as modeled in the compliance run by the ACM is over 75,000 Btu/hr and fan system volumetric capacity of the proposed design as modeled in the compliance run by the ACM is over 2500 cfm

Table N2-14 – System #5 Description ~~*Figure 2-2d System #5 Description*~~

System Description:	Four-Pipe Fan Coil With Central Plant
Supply Fan Power:	See Section ~~2.4.2.22~~2.5.3.5
Minimum Supply Temp:	50 ≤ T ≤ 60 DEFAULT: 55
Cooling System:	Chilled water
Chilled Water Pumping System	Variable flow (2-way valves) with a VSD on the pump if ~~more than~~ three or ~~fewer~~ more fan coils. Constant volume flow with water temperature reset control if ~~fewer~~ less than three fan coils.
Cooling Efficiency:	Minimum efficiency based on the proposed output capacity of specific equipment unit(s)
Maximum Supply Temp:	90 ≤ T ≤ 110 DEFAULT: 100
Heating System:	Gas boiler
Hot Water Pumping System	Variable flow (2-way valves) riding the pump curve if ~~more than~~ three or more ~~fewer~~ fan coils. Constant volume flow with water temperature reset control if ~~fewer~~ less than three fan coils.
Heating Efficiency:	Minimum efficiency based on the proposed output capacity of specific equipment unit(s)
Economizer:	Integrated dry-bulb economizer, when mechanical cooling output capacity of the proposed design as modeled in the compliance run by the ACM is over 75,000 Btu/hr and fan system volumetric capacity of the proposed design as modeled in the compliance run by the ACM is over 2500 cfm

~~*2.4.2.5*~~*1.5.2.5 Combining Like Systems*

Description:	When several similar thermal zones with similar heating/cooling units are combined (see Section 4.3.6.19~~4.3.3.1~~ for conditions that lead to thermal zones being similar) or similar heating/cooling units with similar controls serve a thermal zone, the ACM may combine the system heating and cooling capacities, supply air flow rates, and fan power for the zone. The ACM ~~must~~shall require the user to input the number of such systems. The ACM shall receive a value for this input for fan systems, packaged heating or cooling equipment, chillers and boilers. If equipment or systems are grouped for modeling purposes, t~~T~~he efficiency of the combined system shall be the weighted average of efficiencies of all systems based on the size of each unit. If the user inputs a value greater than 1 for the number of heating/cooling units, the ACM ~~must~~shall print a warning on the Performance Summary form, PERF-1, indicating that systems of similar type have been modeled as one system and that a prescriptive Mechanical Equipment Summary form, MECH-3, ~~must~~shall be attached documenting each individual system. Refer to Chapter 4, Section 4.3.~~3~~6.19 for discussion of allowed like system types.
DOE-2 Command	N/A
DOE-2 Keyword(s)	N/A
Input Type	Default

Tradeoffs	N/A
Modeling Rules for Proposed Design:	The reference program ~~shall~~ may model one heating/cooling unit with heating and cooling capacities, supply air flow rate, and fan power equal to the total capacities, air flow rates, and fan power of the combined systems. The efficiency shall be equal to the capacity weighted average efficiency for the systems being combined.
Default:	One system
Modeling Rules for ~~Reference~~Standard Design (All):	The reference program shall model the standard design using Standard Design System types and the applicable capacities, supply air flow rate, fan power, and the minimum efficiency requirements.

1.5.2.6 Equipment Performance of Air Conditioners and Heat Pumps without SEER Ratings~~Curves (except for electric chillers)~~

Scope	Air conditioners or heat pumps with a capacity greater than 65,000 Btu/h.
Description	The hourly performance of air-to-air air conditioners and heat pumps varies with the outdoor temperature, the loading conditions, the wetbulb temperature of the air returning to the indoor coil, and other factors. The reference method takes account of these factors through a set of equipment performance curves that modify the efficiency or the capacity of the equipment with changes in part-load ratio, outside dry-bulb temperature and wet-bulb temperature of the return air (across the indoor coil).

The four reference method performance curves specified here include.

COOL-CAP-FT	Cooling capacity as a function of outdoor dry bulb and return wet bulb air temperatures.
COOL-EIR-FT	Cooling efficiency as a function of outdoor dry bulb and return wet bulb temperatures.
HEAT-EIR-FT	Heating efficiency as a function of ~~ourdoor~~outdoor dry bulb and return wet bulb temperatures.
HEAT-CAP-FT	Heating capacity as a function of outdoor dry bulb temperature and the return wet bulb temperature. This curve adjusts the capacity of the heat pump as the ODB changes. This is an important curve for heat pumps as an electric resistance element comes on to provide heat when the heat pump has inadequate capacity.
MAX-HP-SUPP-T	This parameter is the outside drybulb temperature below which the heat pump supplemental heating is allowed to operate. This parameter shall be set to 70 ^{o}F.

Other equipment performance curves, such as COOL-EIR-PLR, which are not specified in this manual shall be the default curves defined in DOE-2.1E Reference Manual Supplement, Lawrence Berkeley Laboratory Document #LBL-8706, Rev. 5.

COOL-CAP-FT

The COOL-CAP-FT curve in the reference method adjusts the capacity of the cooling equipment in response to the outdoor drybulb temperature and the wetbulb temperature of the air returning to the indoor coil.

Equation N2-9 $$\text{COOL-CAP-FT} = \cancel{A}a + b * EWB + c * EWB^2 + d * ODB + e * ODB^2 + f * EWB * ODB$$

where:

COOL-CAP-FT =	Normalized cooling capacity of the equipment for the EWB and ODB specified.
EWB =	Wet bulb temperature of air entering the indoor coil.

ODB = Outdoor dry bulb temperature.

a, b, c, d, e, f = Regression constants and coefficients.

COOL-EIR-FT

The COOL-EIR-FT curve adjusts the efficiency of the cooling equipment in response to the outdoor drybulb temperature and the wetbulb temperature of the air returning to the indoor coil.

Equation N2-10 $$COOL\text{-}EIR\text{-}FT = A + b * EWB + c * EWB^2 + d * ODB + e * ODB^2 + f * EWB * ODB$$

where:

T24-COOL-EIR-FT = Normalized cooling energy input ratio for Title 24 standards

EWB = Entering wet bulb temperature

ODB = Outdoor dry bulb temperature

a, b, c, d, e, f = Regression constants and coefficients

HEAT-EIR-FT

~~The HEAT-CAP-FT~~ This curve in the reference method adjusts the efficiency of the heating equipment in response to the outdoor drybulb temperature.

Equation N2-11 $$HEAT\text{-}EIR\text{-}FT = a + b * ODB + c * ODB^2 + d * ODB^3$$

where:

T24-HEAT-EIR-FT = Normalized heating energy input ratio for Title 24 standards

ODB = Outdoor dry bulb temperature

a, b, c, d = Regression constants and coefficients

HEAT-CAP-FT

This curve adjusts the capacity of the heat pump in response to the outdoor drybulb temperature. This curve adjusts the capacity of the heat pump as the ODB changes. This is an important curve for heat pumps as an electric resistance element comes on to provide heat when the heat pump has inadequate capacity.

Equation N2-12 $$HEAT\text{-}CAP\text{-}FT = a + b * ODB + c * ODB^2 + d * ODB^3$$

where

HEAT-CAP-FT = Normalized heating capacity

ODB = Outdoor dry bulb temperature

a, b, c, d = Regression constants and coefficients

Default

The default equipment performance curves coefficients are specified in Table N2-15.

Table N2-15 – Default Coefficients for COOL-CAP-FT, COOL-EIR-FT, HEAT-CAP-FT and HEAT-EIR-FT Equations

Coefficient	COOL-CAP-FT	COOL-EIR-FT	HEAT-CAP-FT	HEAT-EIR-FT
a	0.053815799	-0.4354605	0.253761	1.563358292
~~B~~ b	0.02044874	0.0499555	0.010435	0.013068685
~~C~~ c	-1.45568E-05	-0.0004849	0.000186	-0.001047325
~~D~~ d	-0.000891816	-0.011332	-1.50E-06	1.08867E-05
~~E~~ e	-1.22969E-05	0.00013441		
~~F~~ f	-2.61616E-05	0.00002016		

Tradeoffs	Yes for COOL-EIR-FT, COOL-CAP-FT, HEAT-CAP-FT, and HEAT-EIR-FT. Neutral for the part load equipment performance curves.
Input Type	Required.
Proposed Design Modeling Assumptions	For equipment larger than 135,000 Btu/h, the user may enter data on equipment performance as described below. In this case, the ACM shall use the algorithms described below to determine the temperature dependent performance curves for the proposed design equipment. If the user chooses not to enter data on temperature dependent performance, then the defaults shall be used. For equipment with a capacity less than or equal to 135,000 Btu/h, but larger than 65,000 Btu/h, the user may not enter data on the temperature dependent equipment performance. However, the ACM vendor may work with manufacturers to collection such data and build this data into the ACM. The user may either select equipment for which the ACM vendor has collected or use the defaults.
Standard Design Modeling Assumptions	The standard design equipment uses the default performance curves coefficients specified in Table N2-15.
Algorithms	The reference method shall be able to calculate custom regression coefficients with market data and user-entered data as well as use default coefficients. The default coefficients listed below in Table N2-15 are derived from market data. The method allows the user to enter data for a wet bulb of 67 degrees, and generates data points at other wet bulb temperatures by scaling the user-entered data at a given dry bulb temperature by the wet bulb adjustment predicted by the default performance curve in Table N2-15. The reference program uses a computer program to calculate custom regression constants and coefficients for the performance curves according to the following rules. The input data shall have a minimum of 4 full load points for each performance curve analyzed, including the 95 odb/67ewb ARI point. The user cannot directly modify the curve coefficients.
User Inputs	If non-default values are used for equipment performance, users shall input the gross cooling capacity (GCC) and rated power (PWR) at an entering coil wetbulb temperature of 67 ºF. A minimum of four values shall be entered and one of the values shall be for the ARI rated condition of 95 ºF ODB. The data should be for a nominal fan flow of 400 cfm per ton of rated capacity. The minimum of four data points should include one drybulb temperatures at 85 ºF or lower and one at 115 ºF or higher. The data to be entered are the values in the the shaded areas of Table N2-16. Other blanks in Table N2-16 shall be calculated as described below.

Table N2-16 – Data Input Requirements for Equipment Performance Curves

A Point	B EWB	C ODB	D CAP	E PWR	F EIR	G $NCAP_{ARI}$	H $NCAP_{ARI}$
1	67						
2	67						
3	67						
4	67						
5	67						
6	62						
7	62						
8	62						
9	62						
10	62						
11	72						
12	72						
13	72						
14	72						
15	72						

Calculating EIR (Column F)

The EIR in column F of Table N2-16 shall be calculated as follows from data in columns D and E as shown in the equation below.

Equation N2-13

$$EIR = \frac{PWR}{CAP / 3413}$$

Note that the supply fan shall not be included in the PWR term in Equation N2-14. If data from the manufacturers includes the supply fan power, an adjustment may be made using the procedures in Section 2.5.2.7 of this manual. Neither should the PWR term include the condenser fan, however, the calculated EIR will be sufficiently accurate if the condenser fan is included in the calculation. The condenser fan power is not significant for two reasons. First, the compressor power dominates the power requirements of the system, and second, the EIR values are later normalized, i.e. if each EIR value is calculated in a consistent manner, the ratio will not be significantly affected.

Calculating Normalized Cooling Capacities (Column G)

Inputs to the reference method require a normalized cooling capacity value, which is the ratio of the cooling capacity at a particular combination of ODB and EWB to the capacity at the ARI conditions of 95 ºF ODB and 67 ºF EBT. The normalized capacity is calculated from Equation N2-14. For the ARI rated condition of 95 ºF ODB, this ratio will be one. This calculation is made only for the 67 EWB data points, for which data is entered.

Equation N2-14

$$NCAP_{EWB,ODB} = \frac{CAP_{EWB,ODB}}{CAP_{67,95}}$$

Calculating Normalized Energy Input Ratio (Column H)

Inputs to the reference method require a normalized EIR value, which is the ratio of the EIR at a particular combination of ODB and EWB to the EIR at the ARI conditions of 95 ºF ODB and 67 ºF EBT. The normalized EIR is calculated from Equation N2-15. For the ARI rated condition of 95 ºF ODB, this ratio will be one. This calculation is made only for the 67 EWB data points, for which data is entered.

Equation N2-15

$$NEIR_{EWB,\,ODB} = \frac{EIR_{EWB,ODB}}{EIR_{67,95}}$$

Creating Data Points for 62 ºF and 72 ºF WBT

Generating the equipment performance curve requires data points for EWB of 62 ºF and 72 ºF. These data points are not entered by the user, but rather are scaled from the default equipment performance curve as shown in the equations below.

Equation N2-16

$$EIRRatio_{EWB,\,ODB} = EIRRatio_{67,\,ODB} \times \frac{DefEIRRatio_{EWB,\,ODB}}{DefEIRRatio_{67,ODB}}$$

Equation N2-17

$$CAPRatio_{EWB,\,ODB} = CAPRatio_{67,ODB} \times \frac{DefCAPRatio_{EWB,\,ODB}}{DefCAPRatio_{67,ODB}}$$

Error Checking

Cooling capacity entered for a given wet bulb temperature shall be monotonically decreasing as dry bulb temperature increases. In addition the energy input ratio (EIR) resulting from the entered data shall be monotonically increasing as dry bulb temperature increases. If either or these conditions are violated, the program shall generate an ERROR message indicating that entered capacity information is in error and will not be used in the simulation.

An ERROR message shall also be generated if the range of outside dry bulb temperatures entered is higher than 85 ºF or lower than 115 ºF or if a data point is not entered for 95 ºF outside dry bulb temperature.

The DOE-2 Curve-Fit Function

Once the data in Table N2-16 entered and/or calculated according to the procedures above, the data is then entered in the DOE-2 reference method using the curve fit function. Typical inputs are as described below.

```
COOL-CAP-FT-User =  CURVE-FIT
TYPE             =  BI-QUADRATIC
DATA             =  ( 67,75, NCAP67,75,
                      67,85, NCAP67,85,
                      67,95,1.0,                    $ARI Rated conditions
                      67,105, NCAP67,105,
                      67,115, NCAP67,115,
                      62,75, NCAP62,75,
                      62,85, NCAP62,85,
                      62,95, NCAP62,95,
                      62,105, NCAP62,105,
                      62,115, NCAP62,115,
                      72,75, NCAP72,75,
                      72,85, NCAP72,85,
                      72,95, NCAP72,95,
                      72,105, NCAP72,105,
                      72,115, NCAP72,115 )

COOL-EIR-FT-User =  CURVE-FIT
TYPE             =  BI-QUADRATIC
DATA             =  ( 67,75, NCAP67,75,
                      67,85, NCAP67,85,
                      67,95,1.0,                    $ARI Rated conditions
                      67,105, NCAP67,105,
                      67,115, NCAP67,115,
                      62,75, NCAP62,75,
```

62,85, $NCAP_{62.85}$,
62,95, $NCAP_{62.95}$,
62,105, $NCAP_{62.105}$,
62,115, $NCAP_{62.115}$,
72,75, $NCAP_{72.75}$,
72,85, $NCAP_{72.85}$,
72,95, $NCAP_{72.95}$,
72,105, $NCAP_{72.105}$,
72,115, $NCAP_{72.115}$)

~~*Description:*~~

~~*The reference method will model the performance curves of mechanical heating and cooling equipment as functions of variables such as part-load ratio, outside dry-bulb and wet-bulb temperatures, return air dry-bulb and wet-bulb temperatures and air flow rate. These reference method performance curves are those specified in the DOE-2 Reference Manual (Version 2.1E) Supplement, Lawrence Berkeley Laboratory Document #LBL-8706, Rev. 5. The performance curves for electric chillers are discussed in Section 2.4.2.33.DOE Keyword:*~~

~~CURVE-FIT~~

~~*Input Type:*~~

~~Prescribed~~

~~*Tradeoffs:*~~

~~Neutral~~

~~*Modeling Rules for Proposed Design:*~~

~~The reference method will use the performance curves for equipment specified in the DOE-2 Reference Manual (Version 2.1E) Supplement or other default relationships as specified in this manual.~~

~~*Modeling Rules for Reference Design (All):*~~

~~The reference method will use the same performance curves as the proposed design.~~

1.5.2.7 ~~Cooling Efficiency~~ Equipment Performance of ~~DOE Covered~~ Air Conditioners with SEER Ratings and Heat Pumps with SEER and HSPF Ratings

Scope — Air conditioners and heat pumps with a capacity of 65,000 Btu/h or less and which are rated by the National Appliance and Energy Conservation Act (NAECA).

Description — The efficiency of NAECA air conditioners depends on the temperature of the outside air and other factors. As the temperature increases, the air conditioner becomes less efficient and it has reduced capacity. Likewise, with electric heat pumps in the heating mode, as the outdoor temperature drops, the efficiency declines and so does the capacity. This section of the ACM manual describes the methods and algorithms used by the reference method to account for these factors.

See the previous section on non-NAECA air conditioners and heat pumps for ~~ACMs must require the user to input the SEER (seasonal energy efficiency ratio) of any DOE-covered consumer product. ACMs must allow the user to input the EER (energy efficiency ratio); however, the ACM must not require this input for HVAC equipment that is covered by the U.S. DOE appliance standards.~~more general information on equipment performance curves used by the reference method.

~~ACMs must also use the ARI net cooling capacity input by the user, as required by this chapter, and the ARI tested fan power and part load capacity as . These three values are also necessary to model efficiency of DOE-covered consumer products~~.

~~Modeling of SEER is achieved through accounting for the Electrical Input Ratio, EIR,~~

~~and total system cooling capacity as functions of Outside Dry-Bulb (ODB) and Coil Entering Wet-Bulb (WB) temperatures, and through accounting for duct efficiency impacts on EIR.~~

~~The reference method is based on a created performance curve, similar to the DOE 2.1 curve COOL-EIR-FT, using the following points for WB, ODB and N_{eir}, respectively. This new curve is given below in terms of the reference computer program curve-fit instruction. For single-zone systems with ducts installed in spaces between insulated ceilings and roofs or building exteriors for which the verified sealed duct option has been electeddistribution efficiency, the COOL-EIR-SEER shall be divided by the seasonal as determined in Section 2.4.2.35.~~

Input

ACMs shall require the user to enter the SEER (seasonal energy efficiency ratio). The user may also optionally enter the EER (energy efficiency ratio). ACMs shall require the user to enter the HSPF (heating seasonal performance factor). The user may also optionally enter the COP (coefficient of performance) at 47 F and the ACM may allow the user to enter COP 17 F. From these data the reference method determines equipment performance curves.

Proposed Design Modeling Assumptions

The proposed design shall use the SEER and EER and HSPF of the equipment shown on the plans and included in the construction specifications. As an alternative to HSPF, the ACM shall allow the user to enter a COP at 47 F and may allow a user to enter a COP at 17 F. When a user enters HSPF but does not enter COP 47 F and COP 17 F, the ACM shall calculate the COP 47 F and COP 17 F as described for the Standard Design.

Standard Design Modeling Assumptions

The standard design shall use performance curves based on the SEER of the equipment required by the Standards. The default EER, as defined below shall be used. The standard design heat pump shall have an HSPF as required by section 111. The COP at 47 F shall be determined as below. The efficiency at other outdoor temperatures shall be based on the default DOE-2 HEAT-EIR-FT curve.

For single package units and split systems: COP47 = HSPF * 0.28 + 1.13

The standard design shall determine the COP at other outside temperatures from the DOE 2 default curves.

Tradeoffs

Yes for cooling and heat pump efficiency adjustments for ODB. Neutral for other equipment performance curves.

COOL-EIR-FT

This curve explains how the efficiency of the cooling equipment varies with the ODB and the EWB. This curve is derived from entered or default values of SEER and EER, using the procedures below.

The curve is defined as a bi-quadratic with the coefficients in the following BDL.

```
COOL-EIR-FT =      CURVE-FIT
TYPE =             BI-QUADRATIC
DATA =             (67, 95, 1.0,   $ARI Test Conditions~~57, 82, NEIR57,82~~
                   57, 82, NEIR57,82,
                   57, 95, NEIR57,95,
                   57,110,NEIR57,110,
                   67, 82, NEIR67, 82,
                   ~~67, 95, 1.0,      $ARI Test Conditions~~
                   67,110, NEIR67,110,
                   77, 82, NEIR77, 82,
                   77, 95, NEIR77,95,
                   77,110, NEIR77, 110~~82~~)
OUTPUT-MIN =       NEIR67, 82
```

$NEIR_{WBT,ODB}$ represents the normalized energy input ratio (EIR) for various entering

wetbulb (EWB) and outside drybulb (ODB) temperatures. The value represents the EIR at the specified EWB and ODB conditions to the EIR at standard ARI conditions of 67 ºF wetbulb and 95 ºF drybulb. The COOL-EIR-FT curve is normalized at ARI conditions of 67 ºF entering wetbulb and 95 ºF outside drybulb so $NEIR_{67,95}$ is one or unity, by definition. For other EWB and ODB conditions, values of NEIR are calculated with Equation N2-18.

Equation N2-18

$$NEIR_{EWB,ODB} = \frac{EIR_{EWB,ODB}}{EIR_{67,95}}$$

The energy input ratio (EIR) is the unitless ratio of energy input to cooling capacity. EIR includes the compressor and condenser fan, but not the supply fan. If the energy efficiency ratio EERnf (EER excluding the fan energy) is known for a given set of EWB and ODB conditions, the EIR for these same conditions is given by Equation N2-19 below. The units of EER are (Btu/h)/W.

Equation N2-19

$$EIR_{EWB,ODB} = \frac{3.413}{EERnf_{EWB,ODB}}$$

If the EER (including fan energy) is known for a given set of EWB and ODB conditions, then the EERnf (no fan) can be calculated from Equation N2-20 below.

Equation N2-20

$$\begin{aligned} EERnf_{EWB,ODB} &= 1.0452 \times EER_{EWB,ODB} \\ &+ 0.0115 \times EER_{EWB,ODB}{}^{2} \\ &+ 0.000251 \times EER_{EWB,ODB}{}^{3} \times F_{TXV} \times F_{AIR} \end{aligned}$$

The EER for different EWB and ODB conditions. These are given by the following equations.

Equation N2-21

$$EER_{67,82} = SEER$$

Equation N2-22

$$\begin{aligned} EER_{67,95} &= \text{From Manufacturers Data} \quad [\text{when available}] \\ &= 10 - (11.5 - SEER) \times 0.83 \quad [\text{default for SEER} < 11.5] \\ &= 10 \quad [\text{default for SEER} \geq 11.5] \end{aligned}$$

$$\begin{aligned} EER_{67,95} &= \text{From Manufacturers Data} \quad [\text{when available}] \\ \cancel{= 10 - (11.5 - SEER) \times 0.83} & \cancel{\quad [\text{default for SEER} > 11.5]} \\ &= 10 \quad [\text{default for SEER} \geq 11.5] \end{aligned}$$

Equation N2-23

$$EER_{67,110} = EER_{67,95} - 1.8$$

Equation N2-24

$$EER_{57,ODB} = 0.877 \times EER_{67,ODB}$$

Equation N2-25

$$EER_{77,ODB} = 1.11 \times EER_{67,ODB}$$

F_{TXV} Refrigerant charge factor, default = 0.9. For systems with a verified TXV or verified refrigerant charge, the factor shall be 0.96.

F_{AIR} Airflow adjustment factor. Default cooling air flow shall be assumed in calculations for any system in which the air flow has not been tested, certified and verified. For ACM energy calculations the F_{air} multiplier shall be set to 0.925 for systems with default cooling air flow. For systems with air flow verified, F_{air} shall be 1.00.

EERnf Energy Efficiency Ratio at ARI conditions without distribution fan consumption, but adjusted for refrigerant charge and airflow.

COOL-CAP-FT This performance curve explains how the capacity of the cooling equipment varies as a function of the ODB and the EWB. The default curve defined by the curve coefficients in Table N2-15 shall be used for both the standard design and proposed design.

COOL-EIR-FPLR This performance curve explains how the efficiency of the cooling equipment varies with the part load ratio. Since the effects of part load are captured in the COOL-EIR-FT curve, this curve is disabled. The following input is used in the reference method for both the proposed design and the standard design.

T24NAECADEF-COOL-EIR-FPLR = CURVE-FIT
TYPE = LINEAR
COEF = (0,1)~~(1,0)~~

HEAT-EIR-FT For heat pumps, the reference method uses performance curves based on the ratio of the COPs and CAPACITIES at 47 ºF and at 17 ºF (COP_{47}, COP_{17}, CAP_{47}, CAP_{17}) and creates new performance curves, using the following points for ODB and the COPs and CAPACITIES at these temperatures. For single-zone systems with ducts installed in unconditioned buffer spaces or outdoors as specified in Section 144 (k) of the Standards ~~between insulated ceilings and roofs or building exteriors~~ for which the verified sealed duct option has been elected, the HP-EIR-FT shall be divided by the seasonal distribution efficiencies as determined in Section 2.5.3.18.

HP-EIR-FT	=	CURVE-FIT
TYPE	=	CUBIC
DATA	=	(67,0.856)
	=	(57,0.919)
	=	(47,1.000)
	=	(17,COP_{47}/COP_{17})
	=	(7,1.266×COP_{47}/COP_{17})
	=	(-13, 3.428)

HEAT-CAP-FT This curve adjusts the capacity of the heat pump as the ODB changes. This is an important curve for heat pumps as an electric resistance element comes on to provide heat when the heat pump has inadequate capacity.

HP-CAP-FT	=	CURVE-FIT
TYPE	=	CUBIC
DATA	=	(67,1.337)
	=	(57,1.175)
	=	(47,1.000)
	=	(17,CAP_{17}/CAP_{47})
	=	(7,0.702×CAP_{17}/CAP_{47})
	=	(-13, 0.153)

MAX-HP-SUPP-T This parameter is the outside drybulb temperature below which the heat pump supplemental heating is allowed to operate. This parameter shall be set to 70 ^{o}F.

~~COOL-EIR- = CURVE-FIT~~

~~TYPE = BI-QUADRATIC~~

~~where N_{eirb} and $N_{eir70/67adj}$ are calculated as follows:~~

~~ACMs must first calculate an EER_b from the following equation:~~

~~Equation 2.4.1~~

~~where:~~

~~EER_b = Energy Efficiency Ratio at DOE part-load conditions. [Btuh/watt]~~

~~C_d = Cyclical degradation coefficient at DOE part-load conditions~~

~~If the EER is not input, calculate EER from the following equation:~~

~~Equation 2.4.2 Calculate the electrical input ratio, EIRa, at ARI conditions according to the following equation:~~

~~Equation 2.4.3~~

~~Calculate the electrical input ratio, EIR_b, at ARI part-load conditions according to the following equation:~~

~~Equation 2.4.4 where:~~

~~Equation 2.4.5~~

~~where~~

~~CAP_a = The net cooling capacity [Btuh] at ARI conditions of 95 outside dry-bulb (ODB) and 67 coil entering wet-bulb (WB)~~

~~Normalize EIR_b based on ARI conditions, 95 outside dry-bulb (ODB):~~

~~$N_{eirb} = EIR_b/EIR_a$ [unitless]~~

~~Calculate $N_{eir70/67adj}$ according to the following equation:~~

~~$N_{eir70/67adj} = 0.876 H N_{eirb}$ [unitless]~~

~~For heat pumps, the reference method uses performance curves based on the ratio of the COPs and CAPACITIES at 47°F and at 17°F (COP_{47}, COP_{17}, CAP_{47}, CAP_{17}) and creates new performance curves, similar to the DOE 2.1 COOL-EIR-FT and COOL-CAP-FT, using the following points for ODB and the COPs and CAPACITIES at these temperatures. For single-zone systems with ducts installed in spaces between insulated ceilings and roofs or building exteriors for which the verified sealed duct option has been elected, the HP-EIR-FT shall be divided by the seasonal distribution efficiencies as determined in Section 2.4.2.35.~~

~~HP-EIR-FT = CURVE-FIT~~

~~TYPE = CUBIC~~

~~DATA = (67,0.856)~~

~~= (57,0.919)~~

~~= (47,1.000)~~

~~= (17,COP_{47}/COP_{17})~~

~~= (7,1.266×COP_{47}/COP_{17})~~

~~= (-13, 3.428)~~

~~HP-CAP-FT = CURVE-FIT~~

~~TYPE = CUBIC~~

~~DATA = (67,1.337)~~

~~= (57,1.175)~~

~~= (47,1.000)~~

~~= (17,CAP_{17}/CAP_{47})~~

~~= (7,0.702×CAP_{17}/CAP_{47})~~

~~= (-13, 0.153)~~

~~*DOE Keyword:*~~

~~COOLING-EIR~~

~~*Input Type:*~~

~~Default~~

~~*Tradeoffs:*~~

~~Yes~~

~~*Modeling Rules for Proposed Design:*~~

~~ACMs shall require users to input a value for SEER and shall allow users to input a value for EER. ACMs shall use 0.03 for the cyclical degradation coefficient C_d. The reference method uses user input values to generate the required performance curves for the proposed design.~~

~~*Default:*~~

~~Minimum SEER and EER as specified in the Appliance Efficiency Regulations~~

~~*Modeling Rules for Reference Design (New):*~~

~~The ACM shall assign standard design performance data for the above functions according to the following criteria:~~

~~a) If the proposed design system is a single package unit according to the CEC Appliance Efficiency Standards, the standard design shall use an EER of 8.6, an SEER of 9.9 and a C_d of 0.03 to develop the required performance curves.~~

~~b) If the proposed design system is a split system according to the CEC Appliance Efficiency Standards, the standard design shall use an EER of 8.7, an SEER of 10.0 and a C_d of 0.03 to develop the required performance curves.~~

~~*Modeling Rules for Reference Design (Existing Unchanged & Altered Existing):*~~

~~The ACM shall assign standard design performance data for the above functions according to the following criteria:~~

~~If the existing system is a single package unit according to the CEC Appliance Efficiency Standards, the standard design shall use the EER or the SEER of the existing system and a C_d of 0.03 to develop the required performance curves.~~

~~If the existing system is a split system according to the CEC Appliance Efficiency Standards, the standard design shall use the EER or the SEER of the existing system and a C_d of 0.03 to develop the required performance curves.~~

~~The ACM shall use the ARI fan power of the existing system.~~

~~*2.4.2.8 Cooling Efficiency of Packaged Equipment not Covered by DOE Appliance Standards*~~

~~: Description~~ ~~ACMs shall require the user to input the EER for all packaged cooling equipment that are not covered by DOE appliance standards.~~

	~~ACMs shall also require the user to input the net cooling capacity, CAP_a, at ARI conditions for all cooling equipment.~~
	~~For equipment where supply fan energy is included in the calculation of EER and CAP_a, the reference method shall calculate the electrical input ratio, EIR, according to Equation 2.4.4.~~
	~~For single-zone systems with ducts installed in spaces between insulated ceilings and roofs or building exteriors for which the verified sealed duct option has been elected, the COOL-EIR shall be divided by the seasonal distribution efficiencies as determined in Section 2.4.2.35.~~
~~DOE-2 Command~~	~~SYSTEM~~
~~DOE-2 Keyword(s)~~	~~COOLING-EIR~~
~~Input Type~~	~~Default~~
~~Tradeoffs~~	~~Yes~~
~~Modeling Rules for Proposed Design:~~	~~The ACM shall require the user to input efficiency descriptors at ARI conditions for all equipment documented in the plans and specifications for the building.~~
~~Default:~~	~~Minimum EER as specified in the Appliance Efficiency Regulations~~
~~Modeling Rules for Reference Design (New):~~	~~For the reference method, the standard design shall assign the EER and EIR of each unit according to the applicable requirements of the Appliance Efficiency Standards or the Standards. The EIR of the equipment will be based on the proposed system with an EER that meets the applicable requirements of the Standards but has the same cooling capacity and ARI fan power as the unit selected for the proposed design.~~
~~Modeling Rules for Reference Design (Existing Unchanged & Altered Existing):~~	~~ACMs shall use the EER, EIR, and the ARI fan power of the existing system. The EIR of the existing equipment must be based on the EER and the ARI fan power of the existing system.~~

1.5.2.8 Efficiency of Cooling Equipment Included in Built-up Systems

Description	ACMs ~~must~~shall require the user to input: (1) the type of central cooling plant equipment proposed (e.g. open centrifugal, open reciprocating, water chiller, direct expansion, etc.); (2) the number of central cooling units and the capacity of each unit; (3) the efficiency of each central cooling unit; and (4) the type of refrigerant to be used in each central cooling unit. ACMs shall not accept user-defined performance curves for any equipment except for electric chillers.
DOE-2 Command	
DOE-2 Keyword(s)	COOLING-EIR
Input Type	Default
Tradeoffs	Yes
Modeling Rules for Proposed Design:	The ACM shall require the user to input efficiency descriptors at ARI test conditions for all equipment documented in plans and specifications for the building.
Default:	Minimum efficiency as specified in the Appliance Efficiency Regulations or Tables ~~1-C1~~112-A through 112-E~~112-H~~ of the Building Energy Efficiency Standards
Modeling Rules for ~~Reference~~Standard Design (New):	Based on the capacity and type of chiller(s) the reference method assigns the EER of each unit of the standard design according to the applicable requirements of the Appliance Efficiency Standards or the Standards.

Modeling Rules for ~~Reference~~Standard Design (Existing Unchanged & Altered Existing):	ACMs shall use the EER and the ARI fan power of the existing system.

~~*2.4.2.10 Heating Efficiency of DOE Covered Heat Pumps*~~

~~Description~~	~~ACMs must require the user to input: (1) the Heating Seasonal Performance Factor (HSPF); (2) the heating capacity at 47 ODB; and, (3) the system configuration, either single package unit or split system for DOE covered heat pumps.~~ ~~The reference method calculates an equivalent Coefficient Of Performance (COP) according to the following:~~ ~~? For single package units:~~ ~~Equation 2.4.6a~~ ~~? For split systems:~~ ~~Equation 2.4.6b~~ ~~The reference method will calculate the total heating capacity at ARI conditions, $HCAP_{atot}$ of the heat pump according to the following equation:~~ ~~Equation 2.4.7~~ ~~where the total capacity, $HCAP_{atot}$ is given in Btu per hour [Btuh] and ARIFanPower is rated in watts.~~ ~~The reference method calculates the electrical heating input ratio, HIR, according to the following equation:~~ ~~Equation 2.4.8~~ ~~For single-zone systems with ducts installed in spaces between insulated ceilings and roofs or building exteriors for which the verified sealed duct option has been elected, the HEATING-EIR shall be divided by the seasonal distribution efficiencies as determined in Section 2.4.2.35.~~
~~DOE-2 Command~~	
~~DOE-2 Keyword(s)~~	~~HEATING-HIR~~
~~Input Type~~	~~Default~~
~~Tradeoffs~~	~~Yes~~
~~Modeling Rules for Proposed Design:~~	~~The ACM shall require the user to input all required data, as it occurs in the construction documents.~~
~~Default:~~	~~Minimum COP as specified in the Appliance Efficiency Regulations~~
~~Modeling Rules for Reference Design~~	~~The reference method and all ACMs shall assign a COP of 2.8 to standard design single package units and 3.0 to standard design split systems.~~

~~(New):~~

~~Modeling Rules for Reference Design (Existing Unchanged & Altered Existing):~~ ~~ACMs shall use the COP and the ARI fan power of the existing system.~~

1.5.2.9 Heating Efficiency of Heat Pumps with Ratings Other than HSPF~~not Covered by DOE Standards~~

Scope: This section applies to heat pumps that have a cooling capacity larger than 65,000 Btu/h for which there is neither a SEER or HSPF rating.

Description: ACMs shall require the user to input the ~~COP~~ COP for all packaged heat pump equipment with fans that are not covered by DOE appliance standards.

ACMs shall also require the user to input the net heating capacity, $HCAP_a$, at ARI conditions for all equipment.

The reference method calculates the electrical heating input ratio, HIR, according to the following equation: ~~Equation 2.4.8~~.

$$HIR = \frac{\left[HCAP_a / \left(COP \times 3.413\right)\right] - ARIFanPower}{\left(HCAP_a / 3.413\right) - ARIFanPower}$$

For single-zone systems with ducts installed in unconditioned buffer spaces or outdoors as specified in Section 144(k) of the Standards~~between insulated ceilings and roofs or building exteriors for which the verified sealed duct option has been elected~~, the HEATING-HIR shall be divided by the seasonal distribution efficiencies as determined in Section 2.5.3.18~~2.5.2.35~~.

DOE-2 Command

DOE-2 Keyword(s): HEATING-HIR

Input Type: Default

Tradeoffs: Yes

Modeling Rules for Proposed Design: The ACM shall require the user to input efficiency descriptors as they occur in the construction documents.

Default: Minimum COP as specified in either the Appliance Efficiency Regulations or Table ~~1-C2~~112-B of the Building Energy Efficiency Standards.

Modeling Rules for ~~Reference~~Standard Design (New): For the reference method, the HIR of each unit in the standard design is determined according to the applicable requirements of the Appliance Efficiency Standards or the Standards.

Modeling Rules for ~~Reference~~Standard Design (Existing Unchanged & Altered Existing): ACMs shall determine the HIR of each existing system using the COP and the ARI fan power of the existing system.

1.5.2.10 Heating Efficiency of ~~DOE Covered~~ Fan Type Central Furnaces with AFUE Ratings

Description: ACMs shall require the user to input: (1) the AFUE; (2) the heating capacity; and (3) the system configuration for all ~~DOE covered~~ fan type central furnaces that are rated with AFUE in the Appliance Efficiency Standards.

The reference method calculates an equivalent heating input ratio, HIR, according to the following:

~~2.~~a) For single package units:

Equation N2-26~~.4.9a~~

$$HIR = (0.005163 \times AFUE + 0.4033)^{-1}$$

~~2.~~b) For split systems with AFUEs not greater than 83.5:

Equation N2-27~~.4.9b~~

$$HIR = (0.002907 \times AFUE + 0.5787)^{-1}$$

~~2.~~c) For split systems with AFUEs greater than 83.5:

Equation N2-28~~.4.9c~~

$$HIR = (0.011116 \times AFUE - 0.098185)^{-1}$$

For single-zone systems with ducts installed in unconditioned buffer spaces or outdoors as specified in Section 144(k) of the Standards~~between insulated ceilings and roofs or building exteriors for which the verified sealed duct option has been elected~~, the HEATING-HIR shall be divided by the seasonal distribution efficiencies as determined in Section 2.5.3.18~~2.5.2.35~~..

DOE-2 Command	
DOE-2 Keyword(s)	HEATING-HIR
Input Type	Default
Tradeoffs	Yes
Modeling Rules for Proposed Design:	ACMs shall require the user to input the AFUE of each DOE covered central furnace.
Default:	Minimum AFUE as specified in the Appliance Efficiency Regulations
Modeling Rules for ~~Reference~~Standard Design (New):	The reference method assigns an HIR of 1.24 to all standard design heating systems when a fan-type central furnace is the proposed heating system.
Modeling Rules for ~~Reference~~Standard Design (Existing Unchanged & Altered Existing):	ACMs shall determine the HIR of each existing system using the AFUE of the existing system.

1.5.2.11 Heating Efficiency Fan Type Central Furnaces with Ratings Other than AFUE~~not Covered by DOE Standards~~

Description: The ACM shall require the user to input the steady state efficiency, or the HIR, of each furnace for each furnace's rated capacity.

For single-zone systems with ducts installed in unconditioned buffer spaces or outdoors as specified in Section 144(k) of the Standards~~between insulated ceilings and roofs or building exteriors for which the verified sealed duct option has been elected~~, the HEATING-HIR shall be divided by the seasonal distribution efficiencies as determined in Section 2.5.3.18~~2.5.2.35~~.

DOE-2 Command	
DOE-2 Keyword(s)	HEATING-HIR

Input Type	Default
Tradeoffs	Yes
Modeling Rules for Proposed Design:	The ACM shall require the user to input efficiency descriptors as they occur in the construction documents.
Default:	Minimum Thermal Efficiency or Combustion Efficiency~~COP~~ as specified in either the Appliance Efficiency Regulations or Table ~~1-C5~~ 112-F of the Building Energy Efficiency Standards.
Modeling Rules for ~~Reference~~Standard Design (New):	The standard design shall assign the HIR of each unit according to the applicable requirements of the Standards.
Modeling Rules for ~~Reference~~Standard Design (Existing Unchanged & Altered Existing):	ACMs shall determine the HIR of each existing system using the AFUE of the existing system.

1.5.2.12 Efficiency of Boilers~~with AFUE Ratings~~ ~~Covered by DOE Standards~~

: Description

ACMs ~~must~~shall require the user to input: (1) the type of central boiler proposed (steam or water, forced or induced draft, etc); (2) the number of central boilers and the capacity of each unit; (3) the heating input ratio of each boiler; and (4) the type of primary fuel used in each boiler. ACMs shall use the same boiler part-load curve for the proposed and standard designs. The reference method uses the DOE 2.1E default part-load curves for boilers. ACMs are not allowed to accept user-defined part-load curves for boilers.

ACMs shall calculate an equivalent heating input ratio, HIR, according to the following:

a) 75 ≤ AFUE < 80

Equation N2-29~~.4.10a~~

$$HIR = (0.1 \times AFUE + 72.5)^{-1} \times 100$$

b) 80 ≤ AFUE < 100

Equation N2-30~~.4.10b~~

$$HIR = (0.875 \times AFUE + 10.5)^{-1} \times 100$$

c) Boilers with Thermal Efficiency (Et). HIR for boilers is determined by dividing the thermal efficiency Et into 1.

DOE-2 Input Type	
DOE-2 Tradeoffs	BOILER-HIR
	Default
	Yes
Modeling Rules for Proposed Design:	The reference method converts, to an HIR, the user input AFUE as documented in the plans and specifications for the building.
Default:	Minimum AFUE as specified in the Appliance Efficiency Regulations
Modeling Rules for ~~Reference~~Standard	The standard design shall assign the HIR of each unit according to the applicable requirements of the Standards.

Design (New):

Modeling Rules for ~~Reference~~Standard Design (Existing Unchanged & Altered Existing): ACMs shall determine the HIR of each existing system using the AFUE of the existing system.

~~not Covered by DOE Standards~~

1.5.2.13 Air-Cooled Condensers

~~*Description:*~~

The reference method shall model air-cooled condensers as integral to the cooling plant equipment specified. Direct expansion compressors with air-cooled condensers shall include the EIR of the condenser with the EIR of the compressor. Air-cooled water chillers shall include the EIR of the condenser with the EIR of the chiller.

1.5.2.14 Calculating EIR for Packaged Equipment

The EIR shall be calculated according to Equation N2-31~~Equation 2.4.3~~, except when supply/return fan heat is excluded by the manufacturer when calculating the EER. In that case, the EER shall be calculated according to the following equation:

Equation N2-31~~.4.3~~

$$EIR_a = \frac{(CAP_a / EER)}{(CAP_a / 3.413) + ARIFanPower}$$

Refer to Section 2.5.3.14~~2.5.2.31~~ (Chiller Characteristics) for modeling rules for air-cooled chillers.

1.5.2.15 Electric Motor Efficiency

Description: The full-load efficiency of the electric motor established in accordance with NEMA Standard MG1-1998 (Rev. 2). The standard design shall use the minimum nominal full-load efficiency shown in Table N2-17~~Table 2-8~~. For systems with multiple motors, the reference program combines the mechanical efficiencies as the horsepower weighted average, as follows:

Equation N2-32~~.4.11~~

$$MEFF_{combine} = \frac{\sum_{i=1}^{n} (HP_i \times MEFF_i)}{\sum_{i=1}^{n} HP_i}$$

where

$MEFF_{combine}$	=	Combined mechanical efficiency
$MEFF_i$	=	Mechanical efficiency of the ith motor
HP_i	=	Horsepower of the ith motor
n	=	Total number of motors being combined

DOE-2 Keyword(s): SUPPLY-MECH-EFF
RETURN-EFF

Input Type: Default

Tradeoffs: Yes

Modeling Rules for: The ACM shall require the user to input the full-load efficiency for all electric motors

Proposed Design:	used for HVAC and service hot water that are documented in the plans and specifications for the building as established in accordance with NEMA Standard MG1-1998 (Rev. 2).
Default:	Standard motor efficiency from Table N2-17~~Table 2-8~~.
Modeling Rules for ~~Reference~~Standard Design (New):	The ~~reference design~~standard design shall use the appropriate minimum efficiency values from Table N2-17~~Table 2-8~~.
Modeling Rules for ~~Reference~~Standard Design (Existing Unchanged & Altered Existing):	The ~~reference design~~standard design shall use the full-load efficiency of existing electric motors as established in accordance with NEMA Standard MG1-1998 (Rev. 2)N. If the efficiency of the existing motor is not available the ~~reference design~~standard design shall use the default motor efficiency from Table N2-17~~Table 2-8~~.

Table N2-17~~8~~ – Minimum Nominal Efficiency for Electric Motors (%)

Motor Horsepower	Open Motors				Enclosed Motors			
	2 poles 3600 rpm	4 poles 1800 rpm	6 poles 1200 rpm	8 poles 900 rpm	2 poles 3600 rpm	4 poles 1800 rpm	6 poles 1200 rpm	8 poles 900 rpm
1	-	82.5	80.0	74.0	75.5	82.5	80.0	74.0
1.5	82.5	84.0	84.0	75.5	82.5	84.0	85.5	77.0
2	84.0	84.0	85.5	85.5	84.0	84.0	86.5	82.5
3	84.0	86.5	86.5	86.5	85.5	87.5	87.5	84.0
5	85.5	87.5	87.5	87.5	87.5	87.5	87.5	85.5
7.5	87.5	88.5	88.5	88.5	88.5	89.5	89.5	85.5
10	88.5	89.5	90.2	89.5	89.5	89.5	89.5	88.5
15	89.5	91.0	90.2	89.5	90.2	91.0	90.2	88.5
20	90.2	91.0	91.0	90.2	90.2	91.0	90.2	89.5
25	91.0	91.7	91.7	90.2	91.0	92.4	91.7	89.5
30	91.0	92.4	92.4	91.0	91.0	92.4	91.7	91.0
40	91.7	93.0	93.0	91.0	91.7	93.0	93.0	91.0
50	92.4	93.0	93.0	91.7	92.4	93.0	93.0	91.7
60	93.0	93.6	93.6	92.4	93.0	93.6	93.6	91.7
75	93.0	94.1	93.6	93.6	93.0	94.1	93.6	93.0
100	93.0	94.1	94.1	93.6	93.6	94.5	94.1	93.0
125	93.6	94.5	94.1	93.6	94.5	94.5	94.1	93.6
150	93.6	95.0	94.5	93.6	94.5	95.0	95.0	93.6
200	94.5	95.0	94.5	93.6	95.0	95.0	95.0	94.1
250	94.5	95.0	95.4	94.5	95.4	95.0	95.0	94.5
300	95.0	95.4	95.4	-	95.4	95.4	95.0	-
350	95.0	95.4	95.4	-	95.4	95.4	95.0	-
400	95.4	95.4	-	-	95.4	95.4	-	-
450	95.8	95.8	-	-	95.4	95.4	-	-
500	95.8	95.8	-	-	95.4	95.8	-	-

1.5.3 Air Distribution Systems

1.5.3.1 ARI Fan Power

The *ARI Fan Power* is required to calculate the electrical input ratios (EIR) described above. The reference method determines the *ARI Fan Power* for systems 1, 2 and 3 by assuming that the *ARI Fan Power* is fixed at **365 watts per 1000 cfm with supply air flow rate fixed at 400 cfm per 12,000 ~~Btu~~Btu/h ~~net~~ cooling capacity**.

1.5.3.2 Fan System Configuration

Description:	ACMs ~~must~~shall model the configuration of fan systems as described below.
DOE-2 Command	
DOE-2 Keyword(s)	FAN-PLACEMENT MOTOR-PLACEMENT
Input Type	Prescribed
Tradeoffs	N/A

Modeling Rules for Proposed Design:

- Same specifications as the standard design. ~~The proposed design system shall assume the following:~~
- ~~For systems 1 through 4, all supply fans shall be "draw-through" type, positioned downstream from all heating and cooling sources.~~
- ~~For system 5, the supply fan shall be a "blow-through " type, positioned upstream from heating and cooling sources.~~
- ~~ACMs may combine return fans with the supply fan if and only if the controls are of the same type. For example, ACMs may combine fans if they all have variable speed drive control or if they all are constant volume fans.~~
- ~~Return fans are those that are required to operate at design conditions to draw air from conditioned zones and can either return that air back to the source (the intake of the supply fan system) or exhaust it to the outdoors. Exhaust fans that are manually switched such as bathroom fans must not be included in the fan model.~~
- ~~All fan motor heat shall be rejected to the supply air stream~~

Modeling Rules for ~~Reference~~Standard Design (All):

The proposed design system shall assume the following:

- For systems 1 through 4, all supply fans shall be "draw-through" type, positioned downstream from all heating and cooling sources.
- For system 5, the supply fan shall be a "blow-through " type, positioned upstream from heating and cooling sources.
- ACMs may combine return fans with the supply fan if and only if the controls are of the same type. For example, ACMs may combine fans if they all have variable speed drive control or if they all are constant volume fans.
- Return fans are those that are required to operate at design conditions to draw air from conditioned zones and can either return that air back to the source (the intake of the supply fan system) or exhaust it to the outdoors. Exhaust fans that are manually switched such as bathroom fans shall not be included in the fan model.

All fan motor heat shall be rejected to the supply air stream~~All standard-design fan configuration features shall be the same as the proposed design.~~

1.5.3.3 Fan System Operation

Description:

Operating schedule of fan systems are in ~~Tables 2-4 through 2-~~the standard schedules~~7~~. Fan systems shall operate continuously (turned on) during scheduled operation hours for all occupancy types **except** for the residential units of high-rise residential buildings and hotel/motel guest rooms. In these occupancies, the user may model the fan operation either as *continuous* or *intermittent*. For continuous fan operation, the fan operates during scheduled operation hours regardless of whether heating or cooling- is needed. ~~For intermittent fan operation, the fan operates only when heating or cooling is needed. The DOE-2 Keyword for intermittent fan operation is:~~

~~INDOOR-FAN-MODE = INTERMITTENT~~

~~The DOE-2 Keyword for continuous fan operation is:~~

~~INDOOR-FAN-MODE = CONTINUOUS~~

DOE-2 Command

DOE-2 Keyword(s) FAN-SCHEDULE

	INDOOR-FAN-MODE NIGHT-CYCLE-CONTROL
Input Type	Default
Tradeoffs	Neutral
Modeling Rules for Proposed Design:	ACMs shall model the fan operation as *continuous* for all occupancy types during scheduled operation hours except for the residential units of high-rise residential buildings and hotel/motel guest rooms. For these occupancies, ACMs shall accept input for the type of fan operation (*continuous* or *intermittent).* For intermittent fan operation, the fan operates only when heating or cooling is needed. The DOE-2 Keyword for intermittent fan operation is: INDOOR-FAN-MODE = INTERMITTENT The DOE-2 Keyword for continuous fan operation is: INDOOR-FAN-MODE = CONTINUOUS
Default:	INDOOR-FAN-MODE = CONTINUOUS
Modeling Rules for ~~Reference~~Standard Design (All):	Standard design fan system operation shall be identical to the proposed design except when the user specifies electric resistance heating without a fan system for residential units of high-rise residential buildings and hotel/motel guest rooms. In such cases the ~~reference design~~standard design fan operation shall be *intermittent*.

1.5.3.4 Fan Volume Control

Description:	ACMs ~~must~~shall be capable of modeling different types of supply and return fans for standard design systems 3 and 4. Modeling shall account for the part-load-ratio of the fan, which is the ratio of supply air rate at any given flow to the supply air rate at design flow (maximum flow). All ACMs that explicitly model variable air volume HVAC systems ~~must~~shall require the user to input the type of fan volume control for each supply/return fan combination in the proposed design. Minimum required fan volume controls and associated part-load-curves are given below in the form of DOE 2.1 curve-fit instructions.
DOE-2 Curve-Fit for Constant Volume	Fan supplies a constant volume of air at constant power draw whenever it is in operation. This fan control does not have a part-load-curve.
DOE-2 Curve-Fit for Forward Curved Centrifugal Fan with Discharge Dampers	Variable volume fan with static pressure control dampers at the fan outlet or with no direct static pressure control.

```
FC-FAN-W/DAMPERS  =  CURVE-FIT
            TYPE  =  QUADRATIC
      OUTPUT-MIN  =  0.22
            DATA  =  (.0,1.0)
~~DATA (cont.)~~  =  (0.9,0.88)
                  =  (0.8,0.75)
                  =  (0.7,0.66)
                  =  (0.6,0.55)
                  =  (0.5,0.47)
                  =  (0.4,0.40)
                  =  (0.3,0.33)
?                 =  (0.2,0.27)
```

DOE-2 Curve Fit Forward Curved Centrifugal Fan with Inlet Vanes

Variable volume fan with static pressure flow controlled by vanes at the fan inlet.

FC-FAN-W/VANES	=	CURVE-FIT
TYPE	=	QUADRATIC
OUTPUT-MIN	=	0.22
DATA	=	(1.0,1.0)
	=	(0.9,0.78)
	=	(0.8,0.60)
	=	(0.7,0.48)
	=	(0.6,0.38)
	=	(0.5,0.29)
	=	(0.4,0.24)
	=	(0.3,0.23)
~~?~~	=	(0.2,0.22)

DOE-2 Curve Fit for Air foil Centrifugal Fan with Inlet Vanes

Fan is controlled by variable inlet vanes.

AF-FAN-W/VANES	=	CURVE-FIT
TYPE	=	QUADRATIC
OUTPUT-MIN	=	0.48
DATA	=	(1.0,1.0)
	=	(0.9,0.83)
	=	(0.8,0.71)
	=	(0.7,0.66)
	=	(0.6,0.60)
	=	(0.5,0.55)
	=	(0.4,0.52)
	=	(0.3,0.48)
~~AF-FAN-W/VANES~~	=	~~CURVE-FIT~~
~~TYPE~~	=	~~QUADRATIC~~
~~OUTPUT-MIN~~	=	~~0.48~~
~~DATA~~	=	~~(1.0,1.0)~~
	=	~~(0.9,0.83)~~
	=	~~(0.8,0.71)~~
	=	~~(0.7,0.66)~~
	=	~~(0.6,0.60)~~
	=	~~(0.5,0.55)~~
	=	~~(0.4,0.52)~~
~~?~~	=	~~(0.3,0.48)~~

DOE-2 Curve Fit for

Variable volume fan of any type with static pressure control by an AC frequency

Variable Speed Drive	invertor varying fan speed.		
	ANY-FAN-W/VSD	=	CURVE-FIT
	TYPE	=	QUADRATIC
	OUTPUT-MIN	=	0.10
	DATA	=	(1.0,1.0)
		=	(0.9,0.78)
		=	(0.8,0.57)
		=	(0.7,0.40)
		=	(0.6,0.29)
		=	(0.5,0.20)
		=	(0.4,0.15)
		=	(0.3,0.11)
		=	(0.2,0.10)
DOE-2 Command	SYSTEM		
DOE-2 Keyword(s)	FAN-CONTROL		
Input Type	Prescribed		
Tradeoffs	N/A		
Modeling Rules for Proposed Design:	The ACM shall model the same fan volume control for proposed systems as documented in the plans and specifications for the building. The user may not enter part-load curves for fans or other HVAC equipment.		
Modeling Rules for ~~Reference~~Standard Design (New):	ACMs shall assume a *variable speed drive* for fan volume control for each proposed fan in standard design systems 3 and 4 when the fan motor is greater than 10~~25~~ horsepower. For systems 1, 2, and 5, ACMs shall assume the same fan volume control as the proposed design.		
Modeling Rules for ~~Reference~~Standard Design (Existing Unchanged & Altered Existing):	ACMs shall use the existing fan volume control for the ~~reference design~~standard design.		

1.5.3.5 ~~Design~~ Fan Power ~~Demand~~

Description

ACMs ~~must~~shall model ~~the fan system power demand for~~ all HVAC fans in the system that are required to operate at design conditions. These include supply fans, exhaust fans (that operate during peak), return fans, relief fans, and fan power terminal units (either series or parallel). ~~in order to supply air from the source to the conditioned space and to return it back to the source or to exhaust it to outdoors.~~ The reference program models the fan system power demand using the fan power index (FPI). Fan power index is defined as the ~~hourly~~ power consumption of the fan system divided by the volume of ~~per unit of~~ air moved (W~~atts per~~ /cfm).

For each ~~supply~~ fan that operates during normal HVAC operation~~and each return fan system~~ (except for the fan-coil system serving the residential unit of a high-rise residential building or a hotel/motel guest room), ACMs ~~must~~shall require the user to input: 1) the design BHP; 2) the design drive motor efficiency; and, 3) the design motor efficiency, all at peak design air flow rates. Exhaust fans that are manually controlled (such as bathroom fans) may not operate at design conditions and

therefore ~~must~~shall **not** be included in the fan system power demand calculations.

The reference method calculates the FPI for each fan system according to the following equation:

Equation N2-33

$$FPI = \frac{746}{CFM_s}\left[\frac{BHP_s}{\eta_{ds} \times \eta_{ms}} + \frac{BHP_r}{\eta_{dr} \times \eta_{mr}} + \frac{BHP_o}{\eta_{do} \times \eta_{mo}}\right]$$

where:

FPI = fan power index, [W/cfm]

CFM_S = peak supply air flow rate, [ft³/min]

BHP_S = brake horsepower of supply fan at CFM_S [hp]

BHP_r = brake horsepower of return fan at CFM_S [hp]

BHP_o = brake horsepower of other fans at CFM_S [hp]

h_{ms} = supply motor efficiency [unitless]

h_{mr} = return motor efficiency [unitless]

h_{mo} = other motor efficiency [unitless]

h_{ds} = supply drive efficiency [unitless]

h_{dr} = return drive efficiency [unitless]

h_{mo} = other drive efficiency [unitless]

If the user does not input the design brake horsepower (BHP) and the peak supply air flow rate (cfm) for forced air systems, the ACM shall assume that no mechanical compliance will be performed and shall model the default mechanical system according to the rules in Section 1.5.3.9~~2.4.2.26~~ (modeling default heating and cooling systems).

DOE Keywords: SUPPLY-~~kW~~kW
SUPPLY-DELTA-T
RETURN-kW
RETURN-DELTA-T

Input Type: Required

Tradeoffs: Yes

Modeling Rules for Proposed Design: All ACMs ~~must~~shall model proposed system fan power as documented in the plans and specifications for the building. The proposed design shall use the fan motor efficiency established in accordance with NEMA Standards MG1-1998 (Rev. 2). System fan power shall include all fans that operate during peak cooling conditions, including fans in terminal units. For ECM motors in series fan powered terminal units with systems 3 or 4, the modeled power shall be 50% of the maximum rated power. Standard motors in series fan powered terminal units shall be modeled at 100% of the maximum rated power. Qualifying ECM motors shall have a motor efficiency of at least 70% when rated with NEMA Standard MG-1-1998 (Rev. 2).

Modeling Rules for ~~Reference~~Standard Design (New): The reference method determines the standard design fan power as follows:

a) For systems 1, 2, and 5 with proposed FPI ≤ 0.80: The standard design FPI

shall be the same as the proposed design.

~~a)~~b) For systems 1, 2 and 5 and proposed FPI > 0.80: The standard design FPI shall be 0.80.

~~a)~~c) For systems 3 and 4 and proposed FPI ≤ 1.25: The standard design FPI shall be the same as the proposed design.

~~a)~~d) For systems 3 and 4 and proposed FPI > 1.25: The standard design FPI shall be 1.25.

~~ACMs shall use the same BHP, peak supply flow rate, and drive efficiency as the proposed design.~~ The reference method shall use the appropriate minimum nominal full-load motor efficiency from Table N2-17~~Table 2-8~~.

Modeling Rules for ~~Reference~~Standard Design (Existing Unchanged & Altered Existing): All ACMs ~~must~~shall model the existing system fan power according to the specifications of the existing system. The reference method shall use the full-load nominal efficiency of the existing motor as established in accordance with NEMA Standard MG1. If the efficiency of the existing motor is not available, ACMs shall use the appropriate minimum nominal full-load motor efficiency from Table N2-17~~Table 2-8~~.

1.5.3.6 Process Fan Power

~~*Description:*~~

The p~~P~~ortion of the total fan power exclusively used for air treatment or filtering systems. For each fan system used for air treatment or filtering, ACMs ~~must~~shall adjust the fan power index according to the following equation:

Equation N2-34 Adjusted Fan Power Index (FPI) = Total FPI ~~H~~x (1- (SP$_a$ -1) /SP$_f$)

where:

SP$_a$ = Air pressure drop across air treatment or filtering system, and

SP$_f$ = Total pressure drop across the fan system

Fans whose fan power exclusively serve as process fans ~~must~~shall not be modeled for simulation.

1.5.3.7 Air Economizers

Description: The reference method is capable of simulating an economizer that: (1) modulates outside air and return rates to supply up to 100% of design supply air quantity as outside air; and, (2) modulates to a fixed position at which the minimum ventilation air is supplied when the economizer is not in operation.

The reference method will simulate at least two types of economizers and all ACMs ~~must~~shall receive input for these two types of economizers:

1. *Integrated*. The economizer is capable of providing partial cooling, even when additional mechanical cooling is required to meet the remainder of the cooling load. The economizer is shut off when outside air temperature or enthalpy is greater than a fixed setpoint.

2. *Nonintegrated/fixed set point.* This strategy allows only the economizer to operate below a fixed outside air temperature set point. Above that set point, only the compressor can provide cooling.

DOE-2 Keyword(s) ECONO-LIMIT
ECONO-LOCKOUT
ECONO-LOW-LIMIT

Input Type	Default
Tradeoffs	Yes
Modeling Rules for Proposed Design:	The ACM shall allow the user to input either an *integrated* or *non-integrated* economizer as described above as it occurs in the construction documents. The ACM shall require the user to input the ODB set point.
Default:	No Economizer
Modeling Rules for ~~Reference~~Standard Design (New):	The standard design shall assume an *integrated* air economizer, available for cooling any time ODB < T_{limit}, on systems 1, 2, 3 and 4 (See Standard Design Systems Types) when mechanical cooling output capacity of the proposed design as modeled in the compliance run by the ACM is over 75,000 Btu/hr and fan system volumetric capacity of the proposed design as modeled in the compliance run by the ACM is over 2500 cfm. T_{limit} shall be set to 75°F for climate zones 1, 2, 3, 5, 11, 13, 14, 15 & 16. T_{limit} shall be set to 70°F for climate zones 4, 6, 7, 8, 9, 10 & 12. The ACM shall not assume economizers on any system serving high-rise residential and hotel/motel guest room occupancies.
Modeling Rules for ~~Reference~~Standard Design (Existing Unchanged & Altered Existing):	All ACMs ~~must~~shall model existing economizers as they occur in the existing building.

1.5.3.8 Sizing Requirements

~~*Description:*~~

ACMs ~~must~~shall ~~determine~~ use outdoor weather design conditions for the building location from ~~the user entry for building location which in turn is selected from a list of cities~~ACM Joint Appendix II ~~. The Commission can provide software for city selection which is linked to a database of outdoor design conditions. The outdoor design data determined from the building location is used~~ for calculating design heating and cooling loads. In ~~certain~~ rural locations the user may enter a building location that is shown to have the most similar weather rather than ~~not~~ the closest city with the explicit approval of the local enforcement agency. The same city ~~must~~shall appear for all reports of building location and design weather data. The indoor design air temperature is based on the occupancy type using Table N2-5, Table N2-6, Table N2-7, and Table N2-8~~Table 2-4, 2-5, 2-6, or 2-7.~~.

ACMs ~~must~~shall perform design heating and cooling load calculations for each zone of the ~~standard~~ standard design and ~~proposed buildings~~proposed design. The design load methodology ~~must~~shall be consistent with the ASHRAE Handbook, ~~1997~~, Fundamentals Volume, or with another method approved by the Executive Director.

The reference method uses the following assumptions for design loads:

- *Fixed Design Assumptions by Occupancy*. User values as listed in Table N2-2 and Table N2-3~~*Tables 2-1 or 2-2*~~. Different occupancy schedules are used by the reference method to determine design loads. For cooling loads, lights, equipment/receptacles, and people are at 100% of full load while the building is occupied. For heating loads, these internal gains are 0% of full load at all hours of the day. The HVAC equipment operational hours and thermostat settings schedules ~~must~~shall be based on the selected occupancy type using the occupancy schedules shown in Table N2-5, Table N2-6, Table N2-7, and Table N2-8~~Table 2-4, 2-5, 2-6, or 2-7.~~
- *Ventilation and Process Loads*. See applicable sections on ventilation and process loads.
- ~~*Outdoor Design Temperatures* for the building site location from ASHRAE publication SPCDX: Climate Data for Region X, Arizona, California, Hawaii and Nevada, 1982; latitude of building site location.~~

- *Outdoor Design Temperatures, Summer Daily Temperature Swing and Latitude.* The ACM ~~user must~~shall use ~~either be able to select a city from a list which automatically retrieves the ASHRAE Region X~~ the Heating Winter Median of Extremes temperature~~; and~~ , and the ~~1.0%~~ 0.5 percent Cooling~~Summer~~ Dry-Bulb ~~(0.5%)~~, ~~-~~and Mean Coincident Wet-Bulb temperatures from ACM Joint Appendix II~~for the building site from a database~~; or the user ~~must~~shall be able to enter ~~the~~ these values ~~mentioned above~~ directly into the ACM. The ACM ~~user must~~shall ~~also enter~~ use the daily temperature range for the design cooling day from the hourly weather file for the ~~and the latitude or have this value determined by~~ city ~~selection~~selected.

ACMs ~~must~~shall calculate, for both the ~~standard~~ standard design and proposed design~~s~~, heating and cooling loads and appropriate capacities for supply fans, cooling and heating equipment, hydronic pumps and heat rejection equipment. ACMs must be capable of calculating loads and capacities ~~as appropriate~~ for the five standard design systems. All assumptions for heating and cooling equipment and fan system sizing are documented below.

Cooling Loads

Description

The reference method calculates cooling loads for each fan system using the following assumptions:

- Peak cooling design day profiles ~~developed from ASHRAE SPCDX: Climate Data for Region X, Arizona, California, Hawaii and Nevada, 1982 design weather data~~from ACM Joint Appendix II ~~-~~for the city in which the building will be built. These profiles ~~must~~shall be developed using a method similar to the design day method of the reference computer program.
- All window interior and user-operated shading devices are ignored.
- Internal gains from occupants and receptacle loads are fixed at 100% of the values listed in Table N2-2 or Table N2-3~~Tables 2-1 or 2-2~~ while the building is occupied.
- Indoor dry-bulb temperatures are specified according to Table N2-5, Table N2-6, Table N2-7, and Table N2-8~~Tables; 2-4; 2-5; 2-6; or 2-7,~~ however, the ACM ~~must~~shall be able to calculate the indoor wet-bulb temperature using the occupancy information and the cooling coil characteristics.
- Outdoor design temperatures equal to those listed in the ~~Summer 1.0~~ 0.5 Percent Cooling Design Dry Bulb ~~0.5%~~ and ~~the Summer Design~~Mean Coincident Wet-Bulb ~~0.5%~~ columns of ACM Joint Appendix II. For cooling tower design, temperatures listed in the Summer Design Wet-Bulb 0.5% columns ~~must~~shall be used.

Modeling Rules for Proposed Design:

The reference method calculates the proposed design cooling load using the same assumptions used by the mechanical system designer, including all proposed lighting, ventilation and process load at a constant 100% of the levels documented in the plans and specifications for the building. That is internal loads are all at 100% of full load for the duration of the cooling load calculation.

Modeling Rules for ~~Reference~~Standard Design (All):

- ~~The reference method calculates the standard design load calculations with the following assumptions:~~
- ~~Lighting levels fixed according to Table 2-1 or 2-2 unless tailored lighting documentation and forms are submitted and tailored lighting levels are input by the user, in which case the tailored lighting level is assumed. A non-zero tailored lighting input is an exceptional condition requiring approved or concurrently-submitted prescriptive lighting forms and documentation and special verification by the local enforcement agency.~~
- ~~Ventilation levels fixed according to Tables 2-1 or 2-2 unless tailored ventilation rates are justified and input by the user, in which case the tailored ventilation level is assumed. A non-zero tailored ventilation input is an exceptional~~

~~condition requiring written justification by the applicant and special verification by the local enforcement agency.~~

- ~~Process loads are assumed to be zero unless the locations and types of the equipment producing the process energy are specified on the plans and specifications of the building. Process loads are an exceptional condition requiring written justification by the applicant and special verification by the local enforcement agency.~~shall use the same loads as the proposed design.

Heating Loads

Description

The reference method calculates heating loads for each fan system using the following assumptions:

- Indoor design temperatures according to Table N2-2 or Table N2-3~~Tables 2-5 or 2-6~~.
- No direct solar heat gains.
- All internal gains -- occupants, receptacle loads, other loads (such as pickup load) and lighting levels shall be assumed to be 0% of user input, default and fixed values.
- Indoor design temperatures according to Table N2-5, Table N2-6, Table N2-7, or Table N2-8~~Tables 2-5 or 2-6~~.
- Outdoor design temperatures equal to those ~~listed~~ in the Winter Median of Extremes column ~~of ASHRAE publication SPCDX: Climatic Data for Region X, Arizona, California, Hawaii, and Nevada, 1982~~in ACM Joint Appendix II.

Sizing Procedure for Systems 1, 3, 4, and 5

Modeling Rules for Proposed Design:

1. Calculate proposed fan air flow requirements, cfm_{pc}, based on the design supply air temperature input by the user. The calculated proposed fan air flow requirement is the larger of the heating and cooling air flow requirements, but no lower than 0.4 cfm/ft^2 overall.

NOTE: In the text that follows regarding the "design procedure" or "sizing procedure" subscripts are used for a variety of variables. In the first subscript position subscripts symbols mean:

p = proposed - for the proposed building or design

s = standard - for the standard ~~or reference~~ design

In the second subscript position subscript symbols are used:

c = calculation - for design calculation or sizing calculation

s = simulation - for the compliance simulation

i = input - for user input

In some instances, nom is added after the subscripts to indicate the nominal value of a variable requiring further adjustments.

For the sizing ratio, R, subscripts are used:

f = fans

c = cooling

h = heating

Calculate, R_f, the ratio of the actual proposed design fan air flow, cfm_{pi} and the calculated fan air flow requirement, cfm_{pc}, and determine the standard design fan

sizing factor, F, and the proposed modeled supply air flow rate, cfm_{ps}, as follows:

if $R_f \geq 1.3$	$F = 1.3$	$cfm_{ps} = cfm_{pi}$
if $1.0 < R_f < 1.3$	$F = R_f$	$cfm_{ps} = cfm_{pi}$
if $R_f \leq 1.0$	$F = 1.0$	$cfm_{ps} = cfm_{pc}$

Adjust all zone supply air rates and supply air rates for groups of zones according to the procedure described above.

2. Calculate system coil loads by adjusting the proposed design calculated cooling loads for fan heat and ventilation loads.

3. Reheat coil sizes are as input by the user for interior zones. Reheat with series for perimeter zones are as input by the user but no smaller than 120% of the peak heating load assuming minimum supply air temperature. All VAV minimum positions are as input by the user but no smaller than the minimum ventilation quantity.

4. Calculate total individual cooling plant loads, $CCAP_{pc}$, as the sum of all calculated coil loads served by individual plants (~~eg.~~ e.g. direct expansion unit, chiller, etc.).

   Calculate, R_c, the ratio of the input proposed total plant cooling capacity, $CCAP_{pi}$, to the proposed calculated total cooling capacity, $CCAP_{pc}$, and determine the standard design cooling sizing factor, C, and the proposed nominal modeled total cooling capacity, $CCAP_{psnom}$, as follows:

if $R_c \geq 1.21$	$C = 1.21$	$CCAP_{psnom} = CCAP_{pi}$
if $1.0 < R_c < 1.21$	$C = R_c$	$CCAP_{psnom} = CCAP_{pi}$
if $R_c \leq 1.0$	$C = 1.0$	$CCAP_{psnom} = CCAP_{pc}$

   $CCAP_{ps}$ is determined from $CCAP_{psnom}$ by adjusting for fan generated heat:

$$CCAP_{ps} = CCAP_{psnom} + 1.08(CFM_{ps} - CFM_{pc}) \times \text{Fan } T_p$$

5. Calculate individual heating plant loads, $HCAP_{pc}$, as the sum of all calculated coil loads served by individual plants (~~eg.~~ e.g. boiler, furnace, etc.).

   a) For system 1, the calculated proposed system heating capacity, $HCAP_{pc}$ is the larger of the actual fan cfm x 25 and the calculated steady state heating. Calculate, R_h, the ratio of the input proposed plant heating capacity, $HCAP_{pi}$, to the proposed calculated heating capacity, $HCAP_{pc}$, and determine the standard design heating sizing factor, H, and the proposed modeled heating capacity, $HCAP_{ps}$, as follows:

if $R_h \geq 1.43$	$H = 1.43$	$HCAP_{ps} = HCAP_{pi}$
if $1.2 < R_h < 1.43$	$H = R_h$	$HCAP_{ps} = HCAP_{pi}$
if $R_h \leq 1.2$	$H = 1.2$	$HCAP_{ps} = 1.2 \times HCAP_{pc}$

   b) For systems 3, 4 and 5, calculate, R_h, the ratio of the input proposed plant heating capacity, $HCAP_{pi}$, to the input calculated heating capacity, $HCAP_{pc}$, and determine the standard design heating sizing factor, H, and

the proposed modeled heating capacity, $HCAP_{ps}$, as follows:

if $R_h \geq 1.43$	$H = 1.43$	$HCAP_{ps} = HCAP_{pi}$
if $1.2 < R_h < 1.43$	$H = R_h$	$HCAP_{ps} = HCAP_{pi}$
if $R_h \leq 1.2$	$H = 1.2$	$HCAP_{ps} = 1.2 \times HCAP_{pc}$

Modeling Rules for ~~Reference~~Standard Design (All):

1. Load calculations are performed for the standard building. Total system fan supply air flows are calculated using the same supply air temperatures used for the proposed design, except limited to the ranges listed in the standard design system inputs in Figures Table N2-11~~2-2a~~ through Table N2-14~~2-2d~~, and multiplied by the standard design sizing factor, F, determined in the proposed design sizing procedure.
2. Supply air quantities for each zone of multiple zone systems are determined by calculated zone loads, adjusted so that the block load adds up to the fan cfm.
3. Reheat coil sizes are determined with minimum VAV box positions of 0.8 for interior zones and 0.5 for perimeter zones on interior included reheat coils are only to the standard design if they have been input for the proposed design. Standard design VAV characteristics are determined as follows:

   Air flow rates for interior zones (only those without exterior walls) are further oversized by 33%. Minimum VAV settings for interior VAV zones are set to meet the larger of minimum ventilation requirements, 0.4 cfm/ft^2 or 30% of the zone peak supply air requirements. Reheat is added to meet ventilation loads only if input for the proposed design.

   Minimum volume settings for exterior VAV zones are set to the larger of 0.4 cfm/ft^2 or 30% of the zone peak supply air requirements.

Standard system coil loads are calculated based on calculated zone loads adjusted for fan heat and ventilation loads, then adjusted again for piping loads (for hydronic systems only). Standard system plant capacities are determined by multiplying adjusted coil loads by the standard design sizing factors, C and H, determined in the proposed design sizing procedure.

Sizing Procedure for System 2

Modeling Rules for Proposed Design:

1. Calculate proposed fan air flow requirements, cfm_{pc}, based on the design supply air temperature input by the user or the default supply air temperature listed in the system description in Table N2-11~~Figure 2-2a~~. The calculated proposed fan air flow requirement is the larger of the heating and cooling air flow requirements, but no lower than 0.4 cfm/ft^2 overall.

   Calculate, R_f, the ratio of the actual proposed design fan air flow, cfm_{pi} and the calculated fan air flow requirement, cfm_{pc}, and determine the standard design fan sizing factor, F, and the proposed modeled supply air flow rate, cfm_{ps}, as follows:

if $R_f \geq 1.3$	$F = 1.3$	$Cfm_{ps} = cfm_{pi}$
if $1.0 < \cancel{R_f}RF < 1.3$	$F = R_f$	$Cfm_{ps} = cfm_{pi}$
if $R_f \leq 1.0$	$F = 1.0$	$cfm_{ps} = cfm_{pc}$

   Adjust all zone supply air rates and supply air rates for groups of zones according to the procedure described above.

2. Calculate system coil loads by adjusting the proposed design calculated cooling

loads for fan heat and ventilation loads.

3. Calculate, R_c, the ratio of the input proposed plant cooling capacity, $CCAP_{pi}$, to the same calculated capacity, $CCAP_{pc}$, and determine the standard design cooling sizing factor, C, and the proposed modeled cooling capacity, $CCAP_{ps}$, as follows:

if $R_c \geq 1.21$	$C = 1.21$	$CCAP_{ps} = CCAP_{pi}$
if $1.0 < R_c < 1.21$	$C = R_c$	$CCAP_{ps} = CCAP_{pi}$
if $R_c \leq 1.0$	$C = 1.0$	$CCAP_{ps} = CCAP_{pc}$

4. Calculate the amount of electric resistance heat, $HCAP_{pelec}$, by comparing the user input heating capacity at design conditions, $HCAP_{pdesign}$, to the actual heating load and using the following equations:

$$HCAP_{pdesign} = HP \times HCAP_{pi}$$

$$HLOAD_{pdesign} = HP \times HCAP_{sc}$$

$$HCAP_{pelec} = 1.43 \times HLOAD_{pdesign} - HCAP_{pdesign}$$

5. If the user does not input design heat pump heating capacity, calculate HCAPelec according to the following procedure:

   a) Calculate the heat pump design load factor, HP, from Equation N2-35~~equation 2.4.11~~.

   ~~a)~~b) Calculate $HCAP_{pdesign}$ by multiplying the rated heat pump heating capacity, input by the user, by HP.

   c) Use the equation under step 4 to calculate $HCAP_{elec}$.

Modeling Rules for ~~Reference~~Standard Design (All):

1. Load calculations are performed for the standard building. Total system fan supply air flows are calculated using the standard design cooling load and the same supply air temperatures used for the proposed design, except limited to the ranges listed in the standard design system inputs in Table N2-11~~Figure 2-2a~~, and multiplied by the standard design fan sizing factor, F, determined in the proposed design sizing procedure.

2. Standard system coil loads are calculated based on calculated zone loads adjusted for fan heat and ventilation loads. Standard system cooling capacity is determined by multiplying adjusted coil loads by the standard design cooling sizing factors, C, determined in Step 3 of the proposed design sizing procedure, unless Step 4 below applies.

3. Standard design heating capacity, $HCAP_{ss}$, is determined from the following procedure:

   a) $CCAP_{ss} = C \times (CCAP_{sc} + 1.08[CFMss\text{-}CFMsc] \times Fan\text{-}T_s)$

   and

   $$SCAP_{ss} = C \times SCAP_{sc}$$

   $$HCAP_{ss} = CCAP_{ss}$$

   b) Calculate the heat pump design load factor, HP, from the following equation:

Equation N2-35~~4.11~~ $HP = 0.25367141 + 0.01043512\ K + 0.00018606\ K^2 - 0.00000149\ K^3$

where

$K = T_{outside}$

c) Calculate the design heating capacity, $HCAP_{sdesign}$, by multiplying the rated heat pump heating capacity, input by the user, by HP.

$$HCAP_{sdesign} = HP \times HCAP_{pi}$$

$$HLOAD_{sdesign} = HP \times HCAP_{sc}$$

d) $HCAP_{sdesign}$ is adjusted to be the larger of $HCAP_{sdesign}$, and 75% of the actual design heating load adjusted for fan power and ventilation loads, $HLOAD_{sdesign}$, or

$$HCAP_{sdesign} = MAXIMUM\ (HCAP_{sdesign}, 0.75 \times HLOAD_{sdesign})$$

e) The electric heating capacity for the standard design is thus determined:

$$HCAP_{selec} = 1.43 \times (HLOAD_{sdesign} = HCAP_{sdesign})$$

f) If $HCAP_{sdesign}$ is determined from $0.75 \times HLOAD_{sdesign}$, then the modeled standard design heat pump heating capacity, $HCAP_{ss}$, is determined from the following equation:

$$HCAP_{ss} = HLOAD_{sdesign} / HP$$

$$CCAP_{ss} = HCAP_{ss}$$

1.5.3.9 4Modeling Default Heating and Cooling Systems

Description: ACMs shall model the proper default heating and cooling systems when the user indicates, with the required ACM input, one of the following conditions for the building:

1. Mechanical compliance not performed. When the user indicates that no mechanical compliance will be performed, the ACM ~~must~~shall automatically model the default heating and cooling systems identical to the standard systems defined in Section 2.4~~4~~5.2.4 (Standard Design Systems). The ACM shall require the user to provide the information needed to determine the proper default system type.

2. Mechanical compliance performed with no heating installed. When the user indicates that mechanical compliance will be performed, but the entire project or portions of the space have no installed heating or are heated by an existing heating system, the ACM ~~must~~shall default to a heating system identical to the standard heating system defined in Section 2.4~~4~~5.2.4 (Standard Design Systems) for the space(s) with no installed heating or heated by an existing system. The ACM shall require the user to provide the information needed to determine the proper default system type.

3. Mechanical compliance performed with no cooling installed. When the user indicates with the required ACM input that mechanical compliance will be performed, but the entire project or portions of the space have no installed cooling or are cooled by an existing cooling system, the ACM ~~must~~shall default to a cooling system identical to the standard cooling system defined in Section

2.4~~5~~.2.4 (Standard Design Systems) for the space(s) with no installed cooling or cooled by an existing system. The ACM shall require the user to provide the information needed to determine the proper default system type. The heating fuel source shall be fossil-fuel and the cooling source for residential and hotel/motel guest rooms shall be "other".

DOE-2 Keyword(s)	SYSTEM-TYPE
Input Type	Prescribed
Tradeoffs	N/A
Modeling Rules for Proposed Design:	The proposed design systems shall be determined as follows:

1. *Mechanical compliance not performed*. ACMs shall automatically size and model the default heating and cooling systems and adjust the heating by the standard design sizing factor of 1.2. ACMs shall select the proper mechanical system based on the building type and whether the permitted space is single zone (the conditioned floor area is less than 2500 ft^2) or multiple zone (the conditioned floor area is 2500 ft^2 or greater). See Section 4.3.3.1 (Thermal Zones) for guidelines for zoning a building. The heating fuel source shall be fossil-fuel and the cooling source for residential and hotel/motel guest rooms shall be "other".

   ACMs ~~must~~shall report the default heating and cooling energy use on PERF-1 and indicate that mechanical compliance was not performed. ACMs ~~must~~shall not print any Mechanical forms.

2. *Mechanical compliance performed with no heating installed*. ACMs shall automatically size and model the default heating system for the entire project or portions of the space which have no installed heating or use an existing system and adjust the capacity by the standard design sizing factor of 1.2. ACMs shall select the type of heating system based on the building type and whether the permitted space is single zone or multiple zone. The heating fuel source shall be fossil fuel and the cooling source for residential and hotel/motel guest rooms shall be "other".

   ACMs ~~must~~shall print all applicable mechanical forms and report the heating energy use for the entire project. ACMs ~~must~~shall report "No Heating Installed" for zones with no installed heating system and for zones using the existing heating system.

3. *Mechanical compliance performed with no cooling installed*. ACMs shall automatically size and model the default cooling system for the entire project or portions of the space which have no installed cooling or use an existing cooling system. ACMs shall select the type of heating system based on the building type and whether the permitted space is single zone or multiple zone. The heating fuel source shall be fossil fuel and the cooling source for residential and hotel/motel guest rooms shall be "other".

   ACMs ~~must~~shall print all applicable mechanical forms and report the cooling energy use for the entire project. ACMs ~~must~~shall report "No Cooling Installed" for zones with no installed cooling system and for zones using the existing cooling system.

   Proposed design supply air rates and heating capacity shall be determined according to procedures in Section ~~2.4.2.25~~ 2.5.3.8 (Sizing Requirements) for the appropriate system type. Fan power shall be determined using 0.365 watts per cfm of supply air rate for the cooling system. The rate of supply air (in cfm) ~~must~~shall meet the building's minimum ventilation requirements.

   For occupancies other than the residential units of high-rise residential buildings

and hotel/motel guest rooms, this default proposed cooling system shall also have an integrated dry-bulb economizer as specified in this section, regardless of the capacity.

Modeling Rules for ~~Reference~~Standard Design (All):

ACMs shall determine the ~~reference design~~standard design systems as follows:

1. *Mechanical compliance not performed*. ACMs shall automatically size and model the appropriate standard heating and cooling systems for the entire project using Section 2.4~~4~~5.2.4 (Standard Design Systems). ACMs shall use the standard design sizing factor of 1.2 for heating.
2. *Mechanical compliance performed with no heating installed*. ACMs shall automatically size and model the appropriate standard heating and cooling systems for the entire project using Section 2.4~~4~~5.2.4 (Standard Design Systems). ACMs ~~must~~shall adjust the heating capacity by the standard design sizing factor of 1.2.
3. *Mechanical compliance performed with no cooling installed*. ACMs shall automatically size and model the appropriate standard heating and cooling systems for the entire project using Section 2.4~~4~~5.2.4 (Standard Design Systems).

Standard design supply air rates, heating, and cooling capacity shall be determined according to procedures in Section 2.5.3.8 ~~2.4.2.25~~ (Sizing Requirements) for the appropriate system type. Fan power shall be determined using 0.365 watts per cfm of supply air rate for the cooling system. The rate of supply air (in cfm) ~~must~~shall meet the building's minimum ventilation requirements.

For occupancies other than the residential units of high-rise residential buildings and hotel/motel guest rooms this default standard cooling system shall also have an integrated dry-bulb economizer as specified in this section, regardless of the HVAC system fan volume or cooling capacity.

1.5.3.10 System Supply Air Temperature Control

Description:

ACMs ~~must~~shall be capable of modeling two control strategies, or reset strategies, for supply air temperature for any system compared to standard design systems 3 and 4. ACMs ~~must~~shall: (1) require the user to specify the control strategy used for controlling supply air temperature; and, (2) allow the user to enter the design cooling supply air temperature. Each of these strategies is described below.

Constant. Cooling supply air temperature is controlled to a fixed set point whenever cooling is required.

Outdoor Air Reset. Cooling supply air temperature resets upward during cool weather to reduce zone reheat losses. The ACM ~~must~~shall require the user to enter the reset schedule.

NOTE: Modeling dual duct systems in the proposed design requires the user to enter the heating supply air temperature control strategy as well. Refer to ~~the Optional Systems and Plant Capabilities~~Chapter 3.

DOE-2 Keyword(s)

HEAT-CONTROL
COOL-CONTROL
DAY-RESET-SCH

Input Type

Default

Tradeoffs

Neutral

Modeling Rules for Proposed Design:

The reference method determines the supply air temperature control of the proposed design as input by the user according to the plans and specifications for the building. ACMs shall use the following schedule for the outdoor air reset:

SUPP-AIR-SCH	=	DAY-RESET-SCH
SUPPLY-HI	=	[SUPPLY-LO + 5]
SUPPLY-LO	=	[greater of SAT and 50]
OUTSIDE-HI	=	[SUPPLY-HI]
OUTSIDE-LO	=	[SUPPLY-LO].
SUPP-AIR-RESET	=	RESET-SCHEDULE THRU DEC 31,
(ALL)		SUPP-AIR-SCH

In the absence of the user input, ACMs shall use the Outdoor Air Reset control strategy for the proposed building.

Default: Outdoor Air Reset

Modeling Rules for ~~Reference~~Standard Design (All): The reference method shall use the same supply air temperature control strategy and schedule as the proposed design.

1.5.3.11 Zone Ventilation Air

Description: The reference method models mechanical supply of outdoor ventilation air as part of simulation of any fan system. The ventilation rate for a fan system is the sum of all ventilation requirements for all zones served by the same fan system.

ACMs ~~must~~shall allow the user to: 1) enter the ventilation rate for each zone; and, 2) identify the user input ventilation rate as a tailored ventilation rate. When tailored ventilation rates are entered for any zone, an ACM shall output on compliance forms that tailored ventilation rates have been used for compliance and that a Tailored Ventilation worksheet, and the reasons for different ventilation rates, ~~must~~shall be provided as part of the compliance documentation. Tailored ventilation inputs are designed to allow special HVAC applications to comply, but to be used they ~~must~~shall correspond to specific needs and the particular design and the plans and specifications used to meet those needs.

The reference method determines the minimum building ventilation rate by summing the ventilation rates for all zones determined from Table N2-2~~1~~ ~~Table 2-1~~ or Table N2-3~~Table 2-2~~ as well as zones with justified tailored ventilation rates, input by the user.

DOE-2 Command

DOE-2 Keyword(s) OUTSIDE-AIR-CFM
MIN-OUTSIDE-AIR

Input Type Default

Tradeoffs N/A

Modeling Rules for Proposed Design: The reference method determines the proposed design zone ventilation rate as follows:

1. If no ventilation rate has been entered by the user, the ACM shall use values from Table N2-2~~Table 2-1~~ or Table N2-3~~2-2~~ for the applicable occupancy as the zone ventilation rate for the proposed design.
2. If the zone ventilation rate has been entered by the user, the ACM shall use this value as the zone ventilation rate for the proposed design.

   This total ~~must~~shall not be less than the minimum ventilation rate calculated above. The ACM ~~must~~shall default to the minimum ventilation rate if the

proposed ventilation rate, input by the user, is less than the minimum ventilation rate.

3. If the zone is controlled by DCV the ACM shall output on compliance forms that DEMAND CONTROL VENTILATION IS EMPLOYED FOR THIS ZONE PER SECTION 121 and shall use the larger of the following as the zone ventilation rate for the proposed design:

   a) half of the value from Table N2-2 or Table N2-3.

   b) The minimum rate.

   c) half of the user defined amount, if the zone ventilation rate has been entered by the user.

Default: Ventilation rates from Table N2-2 or Table N2-3~~from Table 2-1 or 2-2~~.

Modeling Rules for ~~Reference~~Standard Design (All): The reference method determines the standard design zone ventilation rate as follows:

1. If no tailored ventilation rate has been entered, the ACM shall use values from Table N2-2 or Table N2-3~~Table 2-1 or 2-2~~ for the applicable occupancy as the zone ventilation rate for the standard design.

2. If a tailored ventilation rate has been entered, the ACM shall assume the tailored value as the zone ventilation rate for the standard design.

3. If the zone is served by a single-zone system (in the proposed design) that has an air-side economizer and has a design occupant density greater than or equal to 25 people per 1000 ft^2 (40 ft^2 per person) from Table N2-2 or Table N2-3, unless space exhaust is greater than the design ventilation rate specified in 121 (b) 2 B minus 0.2 cfm per ft^2 of conditioned area, the ACM shall output on compliance forms that DEMAND CONTROL VENTILATION IS REQUIRED FOR THIS ZONE PER SECTION 121 and the ACM shall use the larger of the following as the zone ventilation rate for the standard design:

   a) half of the value from Table N2-2 or Table N2-3.

   b) the minimum rate.

   c) half of the user defined amount, if the zone ventilation rate has been entered by the user.

1.5.3.12 Zone Terminal Controls

Description: ACMs ~~must~~shall be capable of modeling zone terminal controls with the following features:

- *Variable air volume (VAV).* Zone loads are met by varying amount of supply air to the zone.
- *Minimum box position.* The minimum supply air quantity of a VAV zone terminal control ~~must~~shall be set as a fixed amount per conditioned square foot or as a percent of peak supply air.
- *(Re)heating Coil*. ACMs ~~must~~shall be capable of modeling heating coils (hot water or electric) in zone terminal units. ACMs may allow users to choose whether or not to model heating coils.
- *Hydronic heating*. The ACM ~~must~~shall be able to model hydronic (hot water) zone heating.
- *Electric Heating*. The ACM ~~must~~shall be able to model electric resistance zone heating.

	ACMs ~~must~~shall require the user to specify the above criteria for any zone terminal controls of the proposed system.
DOE-2 Keyword(s)	MIN-CFM-RATIO ZONE-HEAT-SOURCE
Input Type	Required
Tradeoffs	Yes
Modeling Rules for Proposed Design:	The reference method models any zone terminal controls for the proposed design as input by the user according to the plans and specifications for the building. All ACMs that explicitly model variable air volume systems ~~must~~shall not allow any minimum box position to be smaller than the air flow per square foot needed to meet the minimum occupancy ventilation rate.
Modeling Rules for ~~Reference~~Standard Design (New & Altered Existing):	For systems 3 and 4, the ACM ~~must~~shall model zone terminal controls for the standard design with the following features: Variable volume cooling and fixed volume heating Minimum box position set equal to the larger of: a) 30% of the peak supply volume for the zone; or ~~a)~~b) The air flow needed to meet the minimum zone ventilation rate; or ~~a)~~c) 0.4 cfm per square foot of conditioned floor area of the zone. Hydronic heating.
Modeling Rules for ~~Reference~~Standard Design (Existing Unchanged):	The reference method models any zone terminal control for the existing design as it occurs in the existing system.

1.5.3.13 Pump Energy

Description:	The reference method models energy use of pumping systems for hot water, chilled water and condenser water systems (cooling towers), accounting for energy use of pumps and additional cooling energy associated with pump energy rejected to the water stream.
DOE-2 Command	
DOE-2 Keyword(s)	CCIRC-MOTOR-EFF CCIRC-IMPELLER-EFF CCIRC-HEAD CCIRC-DESIGN-T-DROP HCIRC-MOTOR-EFF HCIRC-IMPELLER-EFF HCIRC-HEAD HCIRC-DESIGN-T-DROP TWR-MOTOR-EFF TWR-IMPELLER-EFF TWR-PUMP-HEAD TWR-RANGE
Input Type	Required
Tradeoffs	Yes
Modeling Rules for Proposed Design:	The reference method calculates proposed design pump energy using the following inputs and procedures:

Hot Water Circulation Loop Pump

a) Impeller Efficiency = 67%

~~a)~~b) Motor Efficiency = Full-load efficiency of the electric motor established in accordance with NEMA Standard MG1 (see Section 2.4~~.~~5.2.15~~.7~~)

Equation N2-36~~.4.13~~

$$HCIRC-MOTOR-EFF = \frac{\sum_{i=1}^{n}(MEFF_{hwp_i} \times HP_{hwp_i})}{\sum_{i=1}^{n} HP_{hwp_i}}$$

where

$MEFF_{hwp_i}$ = Hot water pump motor efficiency

HP_{hwp_i} = Hot water pump motor nameplate HP

n = Number of hot water pump motors

c) Motor Horsepower — As designed

~~c)~~d) Flow Rate — As designed (in GPM)

~~c)~~e) Temperature Drop — Design boiler capacity (Btu)/(500×GPM) (in ^{o}F)

~~c)~~f) Design Head — As designed with a maximum of 100 feet of water.

~~c)~~g) Pump Control — As designed

h) Valve Types — Either 2-way or 3-way as designed

Chilled Water Circulation Loop Pump

a) Impeller Efficiency — 72%

~~a)~~b) Motor Efficiency — Full-load efficiency of the electric motor established in accordance with NEMA Standard MG1 (see Section 2.4~~.~~5.2.15~~.7~~)

Equation N2-37~~.4.14~~

$$CCIRC-MOTOR-EFF = \frac{\sum_{i=1}^{n}(MEFF_{chwp_i} \times HP_{chwp_i})}{\sum_{i=1}^{n} HP_{chwp_i}}$$

where

$MEFF_{chwp_i}$ = Chilled water pump motor efficiency

HP_{chwp_i} = Chilled water pump motor nameplate HP

n = Number of chilled water pump motors

c) Motor Horsepower — As designed

~~c)~~d) Flow Rate — As designed (in GPM)

~~c)~~e) Temperature Drop Calculated as follows (in ^{o}F)

Equation N2-38~~.4.15~~

$$CCIRC-DESIGN-T-DROP=\frac{\sum_{i=1}^{n}(Q_{des_i})\times 12}{\sum_{i=1}^{n}(GPM_{evap_i})\times 0.5}$$

where

Q_{des_i} = Chiller design capacity in tons

GPM_{evap_i} = Flow rate in the evaporator in GPM

n = Number of chillers

f) Design Temperature As designed (in ^{o}F)

~~f)~~g) Design Head Minimum (100, $\Delta H_{chwsyspiping}$) in feet of water

Equation N2-39~~.4.16~~

$$\Delta H_{chwsyspiping}=\Delta H_{chwsys}-\frac{\sum_{i=1}^{n}(GPM_{evap_i}\times\Delta H_{evap_i})}{\sum_{i=1}^{n}GPM_{evap_i}}$$

where

$\Delta H_{chwsyspiping}$ = Chilled water piping system head

ΔH_{chwsys} = Chilled water system head

GPM_{evap_i} = Evaporator flow (in GPM)

ΔH_{evap_i} = Evaporator bundle pressure drop (in feet of water)

n = Number of evaporators in the system

h) Pump Control As designed

i) Valve Types Either 2-way or 3-way as designed

Condenser Water Circulation Loop Pump

a) Impeller Efficiency 67%

b) Motor Efficiency Full-load efficiency of the electric motor established in accordance with NEMA Standard MG1 (see Section 2.4~~5~~.2.1~~7~~5)

Equation N2-40~~.4.17~~

$$TWR-MOTOR-EFF=\frac{\sum_{i=1}^{n}(MEFF_{cwp_i}\times HP_{cwp_i})}{\sum_{i=1}^{n}HP_{cwp_i}}$$

where

$MEFF_{cwp_i}$ = Condenser water pump motor efficiency

HP_{cwp_i} = Condenser water pump motor nameplate HP

n = Number of condenser water pump motors

c) Motor Horsepower — As designed

~~c)~~d) Flow Rate — As designed (in GPM)

~~c)~~e) Range — As designed (in ^{o}F)

~~c)~~f) Design Head — Minimum (80, ΔH_{cws}) in feet of water

Equation N2-41~~.4.18~~

$$\Delta H_{cws} = \Delta H_{cwsys} + \frac{\sum_{i=1}^{n}(GPM_{evap_i} \times \Delta H_{evap_i})}{\sum_{i=1}^{m} GPM_{cond_i}}$$

where

ΔH_{cwsys} = Condenser water system head

ΔH_{evap_i} = Evaporator bundle pressure drop (in feet of water)

ΔH_{cws} = Proposed condenser water system head

GPM_{evap_i} = Evaporator flow (in GPM)

GPM_{cond_i} = Condenser flow (in GPM)

n = Number of evaporators in the system

m = Number of condensers in the system

g) Cooling Tower Height — As designed

h) Pump Control — As designed

Modeling Rules for ~~Reference~~Standard Design (New):

The reference method calculates standard design pump energy using the following inputs and procedures:

Hot Water Circulation Loop Pump

a) Impeller Efficiency — 67%

~~a)~~b) Motor Efficiency — Standard motor efficiency from ~~Table 2-8~~ Table N2-17

~~a)~~c) Motor Horsepower — Same as the proposed design

~~a)~~d) Flow Rate (in GPM) — Calculated from standard boiler capacity = Boiler Capacity / 15000

e) Temperature Drop — 30 ^{o}F

~~e)~~f) Standard Head — Same as proposed up to 100 feet of water

~~e)~~g) Pump Control — Fixed speed

h) Valve Types — 2-way

Chilled Water Circulation Loop Pump

a) Impeller Efficiency	72%
~~a)~~b) Motor Efficiency	Standard motor efficiency from Table N2-17~~Table 2-8~~
~~a)~~c) Motor Horsepower	Same as the proposed design
~~a)~~d) Flow Rate (in GPM)	Calculated from standard chiller capacity GPM = tons × 2.0
e) Temperature Drop	12 °F
~~e)~~f) Design Temperature	44 °F
~~e)~~g) Standard Head	Same as proposed design up to 100 feet of water
~~e)~~h) Pump Control	~~Fixed speed~~Variable speed
i) Valve Types	2-way

Condenser Water Circulation Loop Pump

a)~~1.~~ Impeller Efficiency	67%
b)~~2.~~ Motor Efficiency	Standard motor efficiency from Table N2-17 ~~Table2-8~~
c)~~3.~~ Motor Horsepower	Same as the proposed design
d)~~4.~~ Range	10 °F
e)~~5.~~ Flow Rate (in GPM)	Calculated from standard chiller capacity GPM = tons × (1 + 1/COP) × 2.4
f)~~6.~~ Standard Head	Minimum (80, ΔH_{cws}) in feet of water

Equation N2-42~~.4.19~~

$$\Delta H_{cws} = \frac{\Delta H_{cwsyspiping}}{\text{Multiplier}} + 20 + \frac{\sum_{i=1}^{n}(GPM_{evap_i} \times 20)}{\sum_{i=1}^{m} GPM_{cond_i}}$$

where

Equation N2-43~~.4.20~~

$$\Delta H_{cwsyspiping} = \Delta H_{cwsys} - \frac{\sum_{i=1}^{m}(GPM_{cond_i} \times \Delta H_{cond_i})}{\sum_{i=1}^{m} GPM_{cond_i}}$$

$\Delta H_{cwsyspiping}$ = Condenser water piping system head

ΔH_{cwsys} = Condenser water system head

ΔH_{cond_i} = Condenser bundle pressure drop (in feet of water)

ΔH_{cws} = Standard condenser water system head

GPM_{evap_i} = Evaporator flow (in GPM)

GPM_{cond_i} = Condenser flow (in GPM)

Multiplier = A multiplier from Table N2-18~~Table 2-9~~ for adjusting the condenser water piping system head based on pipe size and flow at connection to the cooling tower.

n = Number of evaporators in the system

m = Number of condensers in the system

g)~~7.~~ Pump Control Fixed speed

Default:

Hot water loop design head = 75 feet of water

Chilled water loop design head = 75 feet of water

Condenser water loop design head = 60 feet of water

Modeling Rules for ~~Reference~~Standard Design (Existing Unchanged & Altered Existing):

ACM shall use the information from the existing pumping systems for the ~~reference design~~standard design. If this information is not available, ACMs shall use the above Standard Design values.

Table N2-18~~9~~ – Pipe Head Multipliers Based on Pipe Size and Flow at Connection to the Cooling Tower

Proposed Flow		Normal Size		Undersize down to		Oversized up to	
From (GPM)	To (GPM)	Pipe Size (inch)	Multiplier	Pipe Size (inch)	Multiplier	Pipe Size (inch)	Multiplier
1	35	1.50	1.00	1.25	2.00	2.00	0.31
36	74	2.00	1.00	1.50	3.00	2.50	0.38
75	107	2.50	1.00	2.00	2.25	3.00	0.35
108	180	3.00	1.00	2.50	2.75	4.00	0.25
181	355	4.00	1.00	3.00	3.75	5.00	0.30
356	580	5.00	1.00	4.00	3.00	6.00	0.38
581	880	6.00	1.00	5.00	2.50	8.00	0.25
881	1,600	8.00	1.00	6.00	3.75	10.00	0.30
1,601	2,500	10.00	1.00	8.00	3.00	12.00	0.38
2,501	3,700	12.00	1.00	10.00	2.25	14.00	0.63
3,701	4,500	14.00	1.00	12.00	1.50	16.00	0.50
4,501	6,500	16.00	1.00	14.00	1.88	18.00	0.55
6,501	9,000	18.00	1.00	16.00	1.75	20.00	0.53
9,001	12,000	20.00	1.00	18.00	1.75	24.00	0.43
12,001	16,000	24.00	1.00	20.00	1.75	30.00	0.50
16,001	20,000	30.00	1.00	24.00	1.75	36.00	0.50
20,001	30,000	36.00	1.00	30.00	1.75	N/A	1.0
30,001	>30,001	Any Size	1.00	N/A	1.0	N/A	1.0

1.5.3.14 Chiller Characteristics

Description: The ACM chiller model ~~must~~shall, at a minimum, incorporate the following characteristics:

- *Minimum Ratio:* The minimum capacity for a chiller below which it cycles.
- *Electrical Input Ratio*: Efficiency of the chiller at rated conditions. It is the ratio of the electrical power input to the chiller to the nominal capacity of the chiller.
- *Condenser Type*: It specifies whether the condenser is air-cooled or water-cooled.
- *GPM per Ton*: The ratio of cooling tower water flow in GPM to chiller capacity in tons.

DOE-2 Keyword(s)
SIZE
MIN-RATIO
EIR
*-COND-TYPE
COMP-TO-TWR-WTR

Input Type: Required

Tradeoffs: Yes

Modeling Rules for Proposed Design: ACMs shall model chiller characteristics as follows:

SIZE: The chiller size shall be calculated as follows

Equation N2-44

$$SIZE = \frac{Q_{des_i} \times 0.012}{CAPFT\left(t_{chws_des}, t_{cws_des}\right)}$$

where

Q_{des_i} = Chiller design capacity (in tons) at reference conditions

t_{chws_des} = Chilled water supply temperature at design conditions

t_{cws_des} = Condenser water supply temperature at design conditions

CAPFT() = Capacity performance curve (see ~~2.4.2.33~~2.5.3.16)

~~2~~ *Minimum Ratio*: For chillers with customized curves, ACMs shall calculate the minimum ratio using the part-load data by

Equation N2-45

$$MIN-RATIO = \frac{Q_{des_i}}{Minimum\left(\left[Q_{pload_i1}, Q_{pload_i2}, \ldots, Q_{pload_ij}\right]\right)}$$

where

Q_{pload_ij} = Chiller part-load performance data, Capacity in tons

Q_{des_i} = Chiller design capacity (in tons)

The default minimum ratio values are shown in the t~~T~~able below.

Chiller Type	Default Unloading Ratio
Reciprocating	25%
Screw	15%
Centrifugal	10%
Scroll	25%
Single Effect Absorption	10%
Double Effect Absorption	10%

~~2~~ *Electrical Input Ratio*: ACMs shall calculate the Electrical Input Ratio (EIR) for chillers with customized performance curves from the user input data.

Equation N2-46~~4.26~~

$$E-I-R = \frac{P_{des_i} \times 3.413}{Q_{des_i} \times EIRFT\left(t_{chws_des}, t_{cws_des}\right) \times EIRFPLR(1.0) \times 12.0}$$

$$\cancel{E-I-R} = \frac{P_{des_i} \times 3.413}{Q_{des_i} \times 12.0}$$

where

P_{des_i} = Chiller design input power at design conditions t_{chws_des} and t_{cws_des} (in kW)

Q_{des_i} = Chiller design capacity at design conditions t_{chws_des} and t_{cws_des} (in tons)

EIRFT()= Efficiency performance curve (see ~~2.4.2.33~~2.5.3.16)

EIRFPLR()= Efficiency performance curve (see ~~2.4.2.33~~2.5.3.16)

For other chillers, ACMs shall calculate the EIR using

Equation N2-47

$$E-I-R=\frac{1}{COP\times EIRFT(44{,}85)\times EIRFPLR(1.0)}$$

$$\cancel{E-I-R=\frac{1}{COP}}$$

where

COP	=	Coefficient of Performance
EIRFT()	=	Efficiency performance curve (see ~~2.4.2.33~~2.5.3.16)
EIRFPLR()	=	Efficiency performance curve (see ~~2.4.2.33~~2.5.3.16)

~~?~~ *Condenser Type*: ACMs shall require the user to input whether the chiller is air-cooled or water-cooled.

~~?~~ *GPM per Ton*: For water-cooled chillers with customized performance curves, ACMs shall determine the condenser water flow as a ratio of condenser water flow rate (GPM) to rated chiller capacity (tons) using the following equation.

Equation N2-48

$$COMP-TO-TWR-WTR=\frac{\sum_{i=1}^{n} GPM_{cond_i}}{\sum_{i=1}^{m} Q_{des_i}}$$

where

GPM_{cond_i}	=	Condenser flow rate (in GPM)
Q_{des_i}	=	Chiller design capacity (in tons)
n	=	Number of condensers
m	=	Number of chillers

For default water-cooled chillers, ACMs shall determine the condenser water flow as follows.

Equation N2-49

$$COMP-TO-TWR-WTR=\left[1+\frac{1}{\frac{\sum_{i=1}^{n}(COP_i\times SIZE_i)}{\sum_{i=1}^{n} SIZE_i}}\right]\times 2.4$$

where

COP_i = Coefficient of performance for chiller

Equation N2-50

$$SIZE_i = \frac{Q_{des_i} \times 12{,}000}{1{,}000{,}000}$$

n = Number of chillers

Modeling Rules for ~~Reference~~Standard Design (New & Altered Existing):

ACMs shall model chiller characteristics for the ~~reference design~~standard design as follows:

SIZE: The chiller size shall be calculated as follows

Equation N2-51

$$SIZE = \frac{Q_i \times 0.012}{CAPFT(44{,}85)}$$

where

Q_i = Chiller capacity (in tons) at ARI reference conditions

CAPFT() = Capacity performance curve (see ~~2.4.2.33~~2.5.3.16)

~~?~~*Minimum Ratio*: ACMs shall calculate the minimum ratio default values are shown in the ~~T~~table below.

Chiller Type	Default Unloading Ratio
Reciprocating	25%
Screw	15%
Centrifugal	10%
Scroll	25%
Single Effect Absorption	10%
Double Effect Absorption	10%

~~?~~*Electrical Input Ratio*: ACMs shall calculate the Electrical Input Ratio (EIR) for the ~~reference design~~standard design using

Equation N2-52

$$E-I-R = \frac{1}{COP \times EIRFT(44{,}85) \times EIRFPLR(1.0)}$$

where

COP = Coefficient of Performance

EIRFT() = Efficiency performance curve (see 2.5.2.6~~2.4.5.2.33~~)

EIRFPLR() = Efficiency performance curve (see ~~2.4.2.33~~2.5.3.16)

~~?~~*Condenser Type*: ACMs shall model water-cooled condenser for the ~~reference design~~standard design.

*-COND-TYPE = TOWER

~~?~~*GPM per Ton*: For water-cooled chillers with, ACMs shall determine the condenser

water flow as follows.

Equation N2-53

$$COMP - TO - TWR - WTR = \left[1 + \frac{1}{\frac{\sum_{i=1}^{n} (COP_i \times SIZE_i)}{\sum_{i=1}^{n} SIZE_i}} \right] \times 2.4$$

where

COP_i = Coefficient of performance for chiller i

Equation N2-54

$$SIZE_i = \frac{Q_{des_i} \times 12{,}000}{1{,}000{,}000}$$

n = Number of chillers

Modeling Rules for ~~Reference~~Standard Design (Existing Unchanged): ACMs shall model the existing chiller(s) using the actual data. If the actual data is not available, ACMs shall model the existing design the same as the ~~reference design~~standard design.

1.5.3.15 Number, Selection, and Staging of Chillers and Boilers

Description: The reference method accounts for staging of multiple cooling/heating units input for both the standard and proposed design.

DOE-2 Keyword(s) INSTALLED-NUMBER
TYPE

Input Type Required

Tradeoffs Yes

Modeling Rules for Proposed Design: ACMs shall model the number and staging of boilers and chillers as input and modeled by the user according to the plans and specifications for the building. All chiller plants over 300 tons shall limit the size of air-cooled chillers to 100 tons or less.

Modeling Rules for ~~Reference~~Standard Design (New): The reference method selects the standard design chiller types as follows:

- Total cooling plant load < 150 tons: the standard system uses one (1) water-cooled scroll chiller.
- 150 tons ≤ total cooling plant load < 300 tons: the standard system uses one (1) water-cooled screw chiller.
- 300 tons ≤ total cooling plant load ≤ 600 tons: the standard system uses two (2) equally sized water-cooled centrifugal chillers.

- Total cooling plant load > 600 tons: the standard system uses a minimum of two (2) water-cooled centrifugal chillers but add machines as required to keep the maximum single unit size at or below 1000 tons.

ACMs shall bring up each chiller to 90 percent capacity prior to the staging of the next chiller. ACMs shall model the staged chillers in parallel.

The reference method selects the standard design boiler types as follows:

- Total heating plant load < 6,000,000 Btuh: the standard system uses one (1) atmospheric boiler (no combustion air fan).
- Total heating plant load ≥ 6,000,000 Btuh: the standard system uses two (2) atmospheric boilers (no combustion air fans) of equal size.

ACMs shall bring up each boiler to 90 percent capacity prior to the staging of the next boiler. ACMs shall model the staged boilers in parallel.

Modeling Rules for ~~Reference~~Standard Design (Existing Unchanged & Altered Existing):

ACMs shall model the number and staging of boilers and chillers as input and modeled by the user according to the existing design of the central heating and cooling plants.

1.5.3.16 Performance Curves for Gas Absorption and Electric Chillers

Description

The reference method models the performance curves of electric chillers as functions of variables such as the load, condenser water temperature, and flow rate.

The reference program uses a computer program to calculate~~s~~ custom regression constants for gas absorption and electric chillers. This program calculates the regression constants for performance curves according to the following rules, criteria, inputs, and outputs:

1. The curves are generated using ARI ~~-~~550/590~~,~~ or ARI 560~~, or ARI 590~~ certified data.
2. The data have a minimum of 25 full-load points and 10 part-load points.
3. The full-load data represent a chilled water temperature range of (design-2) °F to (design+6) °F and a condenser water temperature range of 55°F to 85°F (or an outside dry-bulb temperature range of 45°F to 110°F for air-cooled equipment).
4. The part-load data represent unloading using both condenser relief and fixed design condenser temperature.
5. The rms error for power prediction on the data set is 5% or less.
6. The program report the APLV points as entered by the user and the chiller curve predicted performance at the same conditions.
7. The user cannot directly modify either the curve coefficients or the parameters including reference capacity, reference power, minimum unloading ratio, or maximum available capacity.

The program inputs are:

1. Make and model,
2. Chiller type,
3. Evaporator flow rate,

4. Evaporator bundle pressure drop,
5. Chiller design capacity,
6. Chiller design input power (gas and electric separately),
7. Chiller design chilled water supply temperature, and
8. Chiller design entering condenser water temperature (water-cooled), or
9. Chiller design outdoor dry-bulb temperature (air -cooled), and
10 Chiller APLV capacity,
11. Chiller APLV input power (gas and electric separately),
12. Chiller APLV chilled water supply temperature, and
13. Chiller APLV entering condenser water temperature (water-cooled), or
14. Chiller APLV outdoor dry-bulb temperature (air-cooled).

The program outputs are:

1. Predicted Coefficient Of Performance (COP) to within 5% of the manufacturer's data,
2. Four predicted APLV points with a maximum rms error of 5 percent of the manufacturer's data, and
3. Regression coefficients.

For all of the chiller curves, there is a rated condition at which the curves are unity. These are a rated capacity and efficiency at full load and specific chilled water and condenser water supply temperatures. The default curves in DOE2.1E are all rated at 44°F chilled water supply temperature and 85°F condenser water supply temperature. These are the ARI 550/590 ~~-92 and 590-92~~ rating conditions. For custom curves these references will be $CHWS_{des_i}$ and CWS_{des_i} (or OAT_{des_i} for air-cooled equipment).

Three curves are used to determine the performance of each chiller:

~~?~~EIR-FPLR	Percentage full-load power as a function of percentage full-load output.
~~?~~CAP-FT	Capacity correction factor as a function of chilled water supply temperature and condenser water supply temperature.
~~?~~EIR-FT	Efficiency correction factor as a function of chilled water supply temperature and condenser water supply temperature.

For air-cooled equipment the CAP-FT and EIR-FT curves are developed against the chilled water supply and outside air dry-bulb temperatures.

Each of the default curves are given in terms of regression constants (a through f). The regression equations have the following formats:

Equation N2-55

$$CAP_FT = a + b \times CHWS + c \times CHWS^2 + d \times CWS + e \times CWS^2 + f \times CHWS \times CWS$$

$$EIR_FT = a + b \times CHWS + c \times CHWS^2 + d \times CWS + e \times CWS^2 + f \times CHWS \times CWS$$

$$PLR = \frac{Q}{Q_{des} \times CAP_FT(CHWS_{des}, CWS_{des})}$$

$$EIR_FPLR = a + b \times PLR + c \times PLR^2$$

For Gas Absorption Chillers EIR curve fits are replaced by HIR curve fits.

$$HIR_FT1 = a + b \times CHWX + c \times CHWX^2$$

$$HIR_FT2 = a + b \times CWS + c \times CWS^2$$

$$HIR_FPLR = a + b \times PLR + c \times PLR^2$$

$$EIR = QELEC / QCAPNOM$$

$$CAP_FT(CHWX) = 1.00$$

where:

PLR	Part load ratio based on available capacity (not rated capacity)
Q	Present load on chiller (in tons)
Q_{des}	Chiller design capacity (in tons)
CHWS	Chiller chilled water supply temperature ^oF
CHWX	Leaving chilled water temperature ^oF
CWS	Entering condenser water temperature ^oF
$CHWS_{des}$	Chiller design chilled water supply temperature ^oF
CWS_{des}	Design entering condenser water temperature ^oF

For air-cooled equipment OAT is used in place of CWS in the CAP_FT and EIR_FT equations, where OAT is the outdoor dry-bulb temperature.

DOE-2 Command	
DOE-2 Keyword(s)	CURVE-FIT
Input Type	Default
Tradeoffs	Yes
Modeling Rules for Proposed Design:	The reference program uses a computer program with capabilities, calculation criteria, and input and output requirements as described above for producing regression constants for performance curves of electric chillers specified on the plans and specifications for the building.
Default:	Same regression constants and performance curves as those used for the ~~reference design~~standard design.
Modeling Rules for ~~Reference~~Standard Design (All):	*ACMs shall use the regression constants in Table N2-19~~Tables 2-~~10* through Table N2-24~~2-16~~ for the performance curves of electric chillers.

Table N2-19~~10~~ – Default Capacity Coefficients for Electric Air-Cooled Chillers

Coefficient	Scroll	Recip	Screw	Centrifugal
a	0.40070684	0.57617295	-0.09464899	N/A
b	0.01861548	0.02063133	0.03834070	N/A
c	0.00007199	0.00007769	-0.00009205	N/A
d	0.00177296	-0.00351183	0.00378007	N/A
e	-0.00002014	0.00000312	-0.00001375	N/A
f	-0.00008273	-0.00007865	-0.00015464	N/A

Table N 2-20~~11~~ – Default Capacity Coefficients for Electric Water-Cooled Chillers

Coefficient	Scroll	Recip	Screw	Centrifugal
a	0.36131454	0.58531422	0.33269598	-0.29861976
b	0.01855477	0.01539593	0.00729116	0.02996076
c	0.00003011	0.00007296	-0.00049938	-0.00080125
d	0.00093592	-0.00212462	0.01598983	0.01736268
e	-0.00001518	-0.00000715	-0.00028254	-0.00032606
f	-0.00005481	-0.00004597	0.00052346	0.00063139

Table N2-21~~12~~ – Default Efficiency EIR-FT Coefficients for Air-Cooled Chillers

Coefficient	Scroll	Reciprocating	Screw	Centrifugal
a	0.99006553	0.66534403	0.13545636	N/A
b	-0.00584144	-0.01383821	0.02292946	N/A
c	0.00016454	0.00014736	-0.00016107	N/A
d	-0.00661136	0.00712808	-0.00235396	N/A
e	0.00016808	0.00004571	0.00012991	N/A
f	-0.00022501	-0.00010326	-0.00018685	N/A

Table N2-22~~13~~ – Default Efficiency EIR-FT Coefficients for Water-Cooled Chillers

Coefficient	Scroll	Reciprocating	Screw	Centrifugal
a	1.00121431	0.46140041	0.66625403	0.51777196
b	-0.01026981	-0.00882156	0.00068584	-0.00400363
c	0.00016703	0.00008223	0.00028498	0.00002028
d	-0.00128136	0.00926607	-0.00341677	0.00698793
e	0.00014613	0.00005722	0.00025484	0.00008290
f	-0.00021959	-0.00011594	-0.00048195	-0.00015467

Table N2-23~~14~~ – Default Efficiency EIR-FPLR Coefficients for Air-Cooled Chillers

Coefficient	Scroll	Recip	Screw	Centrifugal
a	0.06369119	0.11443742	0.03648722	N/A
b	0.58488832	0.54593340	0.73474298	N/A
c	0.35280274	0.34229861	0.21994748	N/A

Table N2-24~~15~~ – Default Efficiency EIR-FPLR Coefficients for Water-Cooled Chillers

Coefficient	Scroll	Recip	Screw	Centrifugal
a	0.04411957	0.08144133	0.33018833	0.17149273
b	0.64036703	0.41927141	0.23554291	0.58820208
c	0.31955532	0.49939604	0.46070828	0.23737257

1.5.3.17 Cooling Towers

Description: The ACM cooling tower model ~~must~~shall, at a minimum, incorporate the following characteristics:

- *Open circuit*: Condenser water is cooled by evaporation by direct contact with ambient outdoor air stream.
- *Centrifugal or propeller fan*: A centrifugal or propeller fan provides ambient air flow across evaporative cooling media.
- *Staging of Tower Cells*: Capacity is varied by staging of tower cells.
- *Electrical input ratio*: The ratio of peak fan power to peak heat rejection capacity at rating conditions.

DOE-2 Keyword(s)

TYPE
INSTALLED-NUMBER
TWR-CELL-CTRL
TWR-CELL-MIN-GPM
MIN-RATIO
EIR
TWR-DESIGN-WETBULB
TWR-DESIGN-APPROACH
TWR-SETPT-T
TWR-CAP-CTRL

Input Type: Required

Tradeoffs: Yes

Modeling Rules for Proposed Design: ACMs shall model cooling towers as follows:

Sizing. ACMs ~~must~~shall autosize the cooling tower using the following parameters:

1. 0.5% Cooling Design Wet-Bulb Temperature in Joint Appendix I~~using 0.5% design wet-bulb column of ASHRAE publication SPCDX: Climatic Data for Region X, Arizona, California, Hawaii, and Nevada, 1982~~.
2. Design Approach Temperature as input by the user according to the plans and specifications for the building.
3. Number of Tower Cells as input by the user according to the plans and specifications for the building.

If the number of cells is specified, then

INSTALLED-NUMBER = # of cells input by the user

If the number of cells is not specified, then

Equation N2-56

$$\text{INSTALLED}-\text{NUMBER} = \frac{\sum_{i=1}^{n} Q_{des_i}}{1000}$$

where:

Q_{des_i} = Chiller design capacity (in tons)

n = Number of chillers

Staging of Tower Cells. ~~ACMs shall have a control scheme to use~~ The user shall specify whether the tower is controlled with the minimum or ~~the~~ maximum number of cells possible ~~and stage on as many cells as can be staged~~ to keep the flow rate per cell ~~above the minimum allowable~~ within the allowable minimum and maximum flow ranges.

Fan Control. ACMs shall accept input by the user for the cooling tower fan control according to the plans and specifications for the building.

Condenser Water Set-point Control. ACMs shall use a set-point temperature of 70 ^{o}F.

Electrical Input Ratio. ACMs shall calculate the Electrical Input Ratio (EIR) as follows:

Equation N2-57

$$E-I-R=\frac{HP_{CT}\times 2.545}{\sum_{i=1}^{n}(Q_{des_i}\times 12+P_{des_i}\times 3.413)}$$

where:

HP_{CT} = Cooling tower nameplate horsepower per cell

Q_{des_i} = Chiller design capacity (in tons)

P_{des_i} = Chiller design input power (in kW)

n = Number of chillers

Modeling Rules for ~~Reference~~Standard Design (New):

The reference method uses a single cooling tower with the following features for the standard design system:

Sizing. ACMs ~~must~~shall autosize the cooling tower using the following parameters:

1. Design Wet-Bulb Temperature using 0.5% design wet-bulb column of ASHRAE publication SPCDX: Climatic Data for Region X, Arizona, California, Hawaii, and Nevada, 1982.
2. Design Approach Temperature of 10°F.
3. Number of Tower Cells equal to the proposed design. If the proposed design uses air-cooled chillers (no cooling towers), the number of Tower Cells shall be equal to the number of chillers in the ~~reference design~~standard design.

Staging of Tower Cells. The ~~reference design~~standard design shall use a control scheme to use the maximum number of cells possible and stage on as many cells as can be staged to keep the flow rate per cell above 50 percent of maximum.

TWR-CELL-CTRL = MAX-CELLS

Fan Control. The ~~reference design~~standard design shall use a two-speed fan control system.

TWR-CAP-CTRL = TWO-SPEED-FAN

Fan Speed. The standard design shall use the following setting for minimum fan

speed.

TWR-CELL-MIN-GPM = 0.33

Condenser Water Set-point Control. The ~~reference design~~standard design shall use the same set-point temperature as the proposed design.

Electrical Input Ratio. The ~~reference design~~standard design shall use an EIR of 0.0133.

Modeling Rules for ~~Reference~~Standard Design (Existing Unchanged & Altered Existing):

ACMs shall model the existing cooling tower(s) using the actual data. If the actual data is not available, ACMs shall model the existing design the same as the ~~reference design~~standard design.

1.5.3.18 HVAC Distribution Efficiency of Packaged Equipment

Scope	These modeling rules apply for packaged equipment with ducts in unconditioned buffer spaces or outdoors as specified in Section 144(k) of the Standards.
Description:	ACMs shall be able to determine the efficiency of ducts in unconditioned buffer spaces or outdoors~~the unconditioned spaces between insulated ceilings and roofs~~. ACMs shall require the user to enter the duct insulation R-value, the number of building stories, and whether or not the ducts will be sealed and tested for reduced duct leakage. ~~ACMs shall be able to reproduce the duct efficiencies in Appendix H~~
DOE-2 Command	
DOE-2 Keyword(s)	None. Duct efficiency divisors for COOLING-EIR, COOLING-EIR-SEER and HEATING-HIR will be calculated by means of the equations in Appendix ACM NG.
Input Type	Default
Tradeoffs	Yes
Modeling Rules for Proposed Design:	The ACM shall calculate the duct efficiency for the Proposed Design as specified in Appendix ACM NG based on the user inputs specified in this section. The ACM shall require the user to input duct R-value, the number of building stories, the presence of a cool roof, and whether or not credit for reduced duct leakage will be claimed and tested.
Default:	Duct R-value of ~~4.2~~8.0 [$h^oF\ ft^2/Btu$] and duct leakage of ~~22~~8% of fan flow. Number of stories is defaulted to one (1).
Duct Sealing Caution ~~and HERS Provider Notification~~	Warning on PERF-1 if improved HVAC ~~D~~distribution ~~E~~efficiency through duct sealing ~~Option~~ is claimed. Warning shall include minimum qualification criteria described in Appendix ACM NG, Section NG4.3.8~~4~~. ~~When the documentation author or principal mechanical designer provides a signed MECH-1 to the builder, which indicates that duct sealing, including HERS diagnostic testing and field verification is required for compliance, the documentation author or principal designer shall notify the HERS provider by phone, FAX or email of the name of the builder, the street address or subdivision and lot number of the dwelling other identifier for the building, and the measure(s) that require diagnostic testing and field verification. The documentation author shall certify on the PERF-1 that this notification has been completed.~~
Modeling Rules for	The ACM shall ~~calculate~~ use the duct ~~efficiency~~ leakage factors for duct systems in

~~Reference~~Standard Design (New):	newly constructed buildings from Table NG-2 of Appendix ACM NG for the ~~Reference~~Standard Design ~~as specified in Appendix G. based on the default values specified in this section. The Reference Design shall assume the default values for the duct efficiency inputs (Duct R-value = 4.2, Duct Leakage = 22%) except that the number of stories shall be the same as for the Proposed Design.~~
Modeling Rules for ~~Reference~~Standard Design (Existing Unchanged & Altered Existing):	~~ACMs shall model the same distribution system for the Reference Design as for the Proposed Design.~~See Section 3.1.3 on duct sealing in alterations and additions.

1.5.3.19 HVAC Transport Efficiency

Description:	ACMs shall report the ratio between the energy expended to transport heating, cooling and ventilation throughout the building, and the total thermal energy delivered to the various zones in the building.
Modeling Rules:	The transport energy includes all distribution-fan, ventilation-fan and non-DHW pump consumption, and the thermal energy delivered is the sum of all zone loads. This ratio shall be calculated both over the course of the year, and under design conditions. TE = (distribution fan energy + ventilation fan energy + non-DHW pump energy)/(total thermal load)

~~2.5~~1.6 Service Water Heating ~~- Required Capabilities~~

ACMs ~~must~~shall be capable of modeling service water heating systems for nonresidential and high-rise residential buildings. The service water heating system ~~must~~shall be modeled ~~it~~ whether or not it is part of combined hydronic system that serves both space and service water heating demands. ACMs are required to model independent systems for ~~only~~ service water heating. ACMs ~~must~~shall require the user to identify if service water heating is included in the performance compliance submittal. ACMs ~~must~~shall also require the user to identify the type of service water heating systems as described below ~~under *Nonresidential Service Water Heating* and *Residential Service Water Heating*~~and in Appendix RG of the residential ACM manual.

~~2.5.1~~1.6.1 Nonresidential Service Water Heating (Including Hotels Guest Rooms)

ACMs ~~must~~shall be able to accept inputs to distinguish electric or gas water heating ~~source energy~~ systems and ~~must~~shall either assume part-load performance curves for the types of water heaters allowed to be entered OR allow entry of an efficiency (some sort of annual or seasonal efficiency is preferred but a steady state efficiency is acceptable) for the water heating system. The ACM ~~must~~shall be able to accept inputs from the user for a recirculating water heating system or an electrically traced (electric tape) water heating system.

The standard water heating system for either of these two systems is a water heating system with all hot water pipes insulated and a gas boiler with an efficiency as required by the Appliance Efficiency Standards or Table 112-F~~G~~ of the Standards~~of 80%~~. For hotels and high-rise residential buildings, the standard water heating system is a recirculating system.

Water heating shall be modeled using the hourly loads for each occupancy as shown in Table N2-2 or Table N2-3~~Tables 2-1 or 2-2~~, multiplied by the fraction of load in each hour shown in the water heating schedule in the standard schedules ~~Tables 2-4, 2-5, 2-6, or 2-7.~~ These loads shall be combined for each zone to develop a total building water heating load for each hour. Each water heater shall be assigned an individual load, and shall be modeled independent of other water heaters. ~~The ACM shall convert electric energy to Btu/hr at the conversion rate of 10.239 Btu per watt-hour.~~

~~2.5.2~~1.6.1.1 ~~Energy Use of~~ Algorithms and Assumptions~~Water Heaters for Nonresidential Buildings and Residential Buildings with Combined Hydronic Systems~~

For nonresidential buildings, the ~~The~~ hourly water heating energy use shall be determined from Equation N2-58~~Equation 2.5.1~~.

Equation N2-58~~5.1~~

$$WHEU_n = SRL \times F_{whpl(n)} \times DHWHIR \times HIRCOR$$

where:

$WHEU_n$ = Water heating energy use for the nth hour

$F_{whpl(n)}$ = Hourly load multiplier for the nth hour from Table N2-4~~Table~~ through Table N2-8 ~~2-4, 2-5, 2-6, or 2-7~~

SRL = Standard Recovery Load in Btu/hr, derived from the loads per person shown in Table N2-1 or N2-2 for the occupancy served by the water heater. If a water heater may serve more than one occupancy, the load should be weighted by the number of square feet in each occupancy served by the water heater.

DHWHIR = Heating input ratio of the water heater(s) which is equal to the inverse of the recovery efficiency (RE) or thermal efficiency (TE). The recovery efficiency for electric water heaters is 0.98.

HIRCOR = Part-load correction factor

HIRCOR is determined from the following procedure, given in the form of a DOE 2.1 curve fit instruction:

DHW-HIR-FPLR = ACM-DHW-CRV

ACM-DHW-CRV = CURVE-FIT

TYPE = LINEAR

COEFFICIENTS = (DHW-A,DHW-B)

These commands yield an equation for HIRCOR of:

HIRCOR = (DHW-A) + (DHW-B) ´ PLR

Where:

Equation N2-59~~5.2~~

$$DHW-A = \frac{STBY}{INPUT}$$

Equation N2-60~~5.3~~

$$DHW-B = \frac{(INPUT \times RE^*) - STBY}{SRL}$$

* or Thermal Efficiency (*TE*)

PLR_n = Part-load ratio for the nth hour and ~~must~~shall always be less than 1. PLR_n is calculated from the following equation:

Equation N2-~~-~~61~~5.4~~

$$PLR_n = \frac{SRL \times F_{whpl(n)}}{INPUT \times RE^*}$$

* or Thermal Efficiency (*TE*)

INPUT = The input capacity of the water heater expressed in Btu/hr.

STBY = Hourly standby loss expressed in Btu/hr.

For storage type water heaters, not in the scope of Covered Consumer Products as defined in the Title 10 or the Code of Federal Regulations, Part 430;

Equation N2-62~~.5.5~~

$$STBY = 453.75 \times S \times VOL$$

where:

S = The standby loss fraction listed~~published~~ in the Commission's Appliance Database~~Directory~~ of Certified Water Heaters,

VOL = The actual storage capacity of the water heater as listed~~published~~ in the Commission's Appliance Database~~Directory~~ of Certified Water Heaters,

For storage type water heaters that are ~~covered consumer products~~NAECA covered products, the standby loss shall be calculated with the following equation.

Equation N2-63~~.5.6~~

$$STBY = \frac{1440.104 \times \left(\frac{1}{EF} - \frac{1}{RE^*}\right)}{\left(1 - \frac{1701.941}{(INPUT \times RE^*)}\right)}$$

* or Thermal Efficiency (*TE*)

where:

EF = Energy Factor

For instantaneous water heaters that are not Covered Consumer Products,

STBY = PILOT

Where PILOT is the pilot light energy use in Btu/hr

Required inputs and standard and proposed design assumptions depend on the type of water heater and whether or not it is a DOE covered consumer product.

1.6.1.2 DOE Covered Water Heaters

Description:	ACMs ~~must~~shall require the user to enter fuel type (electricity or gas), input, volume, energy factor, recovery efficiency or thermal efficiency, and quantity for DOE covered storage-type water heaters.
DOE-2 Keyword(s)	DHW-TYPE DHW-SIZE DHW-EIR DHW-EIR-FT DHW-EIR-FPLR
Input Type	Required
Tradeoffs	Neutral
Modeling Rules for Proposed Design:	The proposed design shall assume fuel type, input, volume, energy factor, recovery efficiency or thermal efficiency, and quantity as input by the user and as shown in the construction document for the building.
Modeling Rules for ~~Reference~~Standard Design (All):	The standard design shall assume fuel type, input, volume, recovery efficiency or thermal efficiency, and quantity identical to the proposed design. The standard design shall assume an energy factor, calculated as a function of the volume,

according to equations found in ~~either Section 111 or 113 of the Building Energy Efficiency Standards~~the Appliance Efficiency Regulations.

1.6.1.3 Water Heaters not Covered by DOE Appliance Standards

Description:	ACMs ~~must~~shall require the user to enter fuel type, input, volume, recovery efficiency or thermal efficiency, standby loss and quantity for all storage type water heaters that are not covered by DOE appliance standards.
DOE-2 Command	
DOE-2 Keyword(s)	DHW-TYPE DHW-SIZE DHW-HEAT-RATE DHW-EIR DHW-EIR-FT DHW-EIR-FPLR DHW-LOSS
Input Type	Required
Tradeoffs	Neutral
Modeling Rules for Proposed Design:	The proposed design shall assume fuel type, input, volume, recovery efficiency or thermal efficiency, standby loss and quantity as input by the user and as shown on the construction documents for the building.
Modeling Rules for ~~Reference~~Standard Design (All):	The standard design shall assume fuel type, input, volume and quantity that are identical to the proposed design. The standard design shall assume recovery efficiency or thermal efficiency and standby loss as specified in either Section 111 or 113 of the Building Energy Efficiency Standards.

1.6.1.4 Boilers

If a boiler (or boilers) serve both space and service water heating systems, the ACM shall assign space heating and recovery loads to the boiler for both the standard and proposed designs. Boilers shall be simulated as described in Section 2.5.2.12~~2.5.2.14 or 2.5.2.15, whichever is applicable~~.

1.6.1.5 Unfired Indirect Water Heaters (Storage Tanks)

ACMs shall simulate jacket losses and effective recovery efficiency for unfired indirect water heaters and storage tanks. Jacket losses shall be calculated using the following equation:

Equation N2-64~~5.7~~

$$JL = \frac{117.534VOL^{0.66} + 99.605VOL^{0.33} + 21.103}{REI} + 61.4$$

where:

JL	=	Hourly jacket loss in Btu
VOL	=	Volume of indirect heater or storage tank in gallons
REI	=	R-value of exterior insulating wrap

The adjusted hourly recovery load seen by the primary water heating devices described above (e.g. water heater or boiler) shall be calculated according to Equation N2-65~~Equation 2.5.8~~

Equation N2-65~~5.8~~

$$PARL_n = \frac{SRL \times F_{whpl(n)} \times JL}{0.98}$$

Where:

$PARL_n$ = Adjusted recovery load seen by the primary water heating device for the nth hour

DOE-2 Command	
DOE-2 Keyword(s)	DHW-LOSS
Input Type	Required
Tradeoffs	Neutral
Modeling Rules for Proposed Design:	ACMs shall assume indirect water heaters with volume and REI as input by the user and as shown in the construction documents for the building. ACMs ~~must~~shall not allow the user to enter an REI of less than 12.
Modeling Rules for ~~Reference~~Standard Design (All):	If an indirect water heater is input as part of the proposed design, that standard design shall assume an indirect heater with the same volume as the proposed design and REI of 12.

~~2.5.3~~1.6.2 High-Rise Residential Water Heating Calculation Methods

For high-rise residential buildings, ACMs shall calculate the energy consumption of the proposed water heating system(s) and the water heating energy budget in accordance with procedures in the Residential ACM Manual, and Residential ACM Appendix RG. ~~Section 151(b)(1) of the Standards.~~ Alternatively, users may show service water heating compliance using the prescriptive requirements of Section 151(f)(8) of the Standards. In this case, water heating is left out of the performance calculations.

3. Optional Capabilities ~~Reference Method and Modeling for Alternative Calculation Methods (ACMs)~~

Candidate ACMs may have more capabilities than the minimum required. These *optional capabilities* can be approved for use with the ACM for compliance purposes. Optional capabilities ~~are those capabilities of an ACM that are not required as a Required Capability and for which there may or~~ may not ~~be~~ have specific capability tests in Chapter 5. Applicants wishing to receive approval for optional capabilities ~~of their ACM must~~shall ~~meet all of the~~ document the capability ~~ation requirements of~~ as required in this chapter ~~the capabilities proposed~~ and be prepared to defend the technical accuracy of any optional modeling capabilities during the ACM approval process.

The Commission does not require ~~a program~~ an ACM to ~~have these~~ incorporate optional capabilities, accept inputs for optional capabilities (except for *optional compliance capabilities*), or use ~~these~~ optional capabilities procedures in order to become certified. ~~However,~~ If an ACM ~~may~~ offers optional capabilities to the user ~~provided~~, the specific capabilities ~~have been~~ shall be certified by the Commission ~~or~~ and the ACM shall meet~~s~~ all special conditions, conform~~s~~ to all required calculation~~al~~ procedures, and pass~~es~~ ~~certified~~ certification tests ~~for optional capabilities previously approved by the Commission for another ACM~~(when applicable). The special conditions may include the ~~cap~~ability to accept special input and produce special output ~~for the optional capability~~. ~~The Commission must review separate test results and specifically approve the ACM for these additional optional capabilities.~~ The assumptions for the optional capabilities ~~must~~shall be included in the vendor's submittal for optional capabilities as described ~~in Sections 3.3 through 3.6~~later in this chapter. For the purpose of compliance, the use of any optional capability is considered an exceptional condition requiring special ~~additional documentation to~~ reporting on the certificate of compliance~~verify the distinctive features in the drawings and specifications related to the optional capability and to verify the particular inputs that are used to characterize the optional capability.~~.

~~An ACM's optional or additional capabilities must have specific tests, specific input and specific output requirements and these all must be approved by the Commission in writing.~~ Optional capabilities and any non-required ACM inputs that modify ACM results in such a way that can result in the ACM failing to meet the approval criteria for any test in Chapter 5 are specifically prohibited, unless their use has been approved by the Commission as an optional capability. This is especially true for inputs and capabilities that cannot be modeled using the reference computer program. This does not mean that ACMs may not differ in their inputs. For example, one ACM may accept wall heat capacity as an input, while another may use volume, density, and specific heat of the component wall materials to calculate the heat capacity, while another still may assume a heat capacity as a function of wall type. But no ACM may have an input, for example, for mass of phase change material in the wall and material phase change temperature without specific prior written approval of that capability and its associated inputs, outputs, and internal defaults and restrictions.

If any optional capability is modeled, the option ~~must~~shall be specified on the appropriate compliance form which is automatically generated by the ACM. Additionally, any optional capability used in compliance ~~must~~shall be listed on the Certificate of Compliance ~~Performance Summary form, PERF-1, page 2,~~ as an exceptional condition ~~which requires additional special documentation~~.

The ACM approval application (see ACM Appendix NA) ~~must~~shall list and describe (or reference the description in the ACM User's Manual) all optional capabilities which are certified for compliance.

3.1 Alternations and Additions ~~- Compliance Optional Capabilities~~

The following optional ~~compliance~~ alternations and additions capabilities may be allowed by nonresidential ACMs. ~~Optional compliance capabilities include partial compliance and compliance for additions and alterations.~~ There are specific output requirements for these options which are described in this Section and Section 2.~~7~~ 2 ~~Required Standard Reports~~Compliance Documentation.

3.1.1 Additions & Alterations

If the ACM is approved for the optional capabilities of alterations or automated calculation of Addition plus Existing Building, the ACM ~~must~~shall produce approved additional forms for existing building components and systems in accordance with the procedures described in Section 2.~~7~~ 2 ~~Required Standard Reports~~Compliance Documentation.

The Addition plus Existing Building calculation may also be performed by performing two separate runs. The first run is used to determine the budget for the existing building prior to the addition or alterations and the budget for a standard building similar to the existing building. These budgets are taken from the output for the proposed and standard building energy consumption using either the diagnostic output (if the existing building does not comply) or information from the PERF-1. The addition is modeled separately in the second run to determine the target budget for the addition space from the budget for the standard building for the addition. The budgets for these spaces are combined to determine a target budget for the combination of the two spaces. Budgets given in energy use per square foot per year are area weighted while budgets given in energy use per year for the total area can be added together.

The altered existing building plus the addition can then be modeled and the proposed building budget from that run ~~must~~shall be less than the combined budget for the spaces above to get compliance.

When the addition is modeled separately and the existing HVAC system is to be expanded to serve both existing and new spaces, the HVAC system for the addition shall be modeled as a separate HVAC system of the same type as the existing HVAC system with similar efficiency characteristics (EER, COP, FPI, etc.)

3.1.2 Alteration or Addition Plus Altered Existing

ACMs that allow automated analysis of alterations of an existing building or an addition in conjunction with an existing building with alterations ~~must~~shall perform compliance analysis of additions and alterations according to Section 149 of the Standards. This procedure also requires special and specific input and reporting procedures that complement the reporting requirements for a new building alone.

ACMs may use a two pass compliance procedure for an Addition plus Existing Building analysis~~ similar to that used for the residential standards and described in the Residential ACM Approval Manual. See Section 3.1 Optional Compliance Capabilities for more information on this technique~~. This technique requires the modeling of two different proposed designs with the ACM: (1) existing building and (2) the altered existing building combined with the proposed addition.

3.1.3 Duct Sealing in Additions and Alterations

Section 149(a)1 establishes prescriptive requirements for duct sealing in additions and Sections 149(b)1.C. and 149(b)1.D. establish prescriptive requirements for duct sealing and duct insulation for installation of new and replacement duct systems and duct sealing for installation of new and replacement space conditioning equipment. Table NG-2 provides Duct Leakage Factors for modeling of sealed and tested new duct systems, sealed and tested duct systems in existing buildings, and untested duct systems. Appendix NG provides procedures for duct leakage testing and Table NG-3 provides duct leakage tests and leakage criteria for sealed and tested new duct systems and sealed and tested existing duct systems. These requirements, factors, procedures, tests and criteria apply to performance compliance for duct sealing in Additions and Alterations. The following table specifies the Proposed Design and Standard Design for Additions and Alterations.

Condition	*Proposed Design*	*Standard Design*
Additions Served by Entirely New Duct Systems	The Proposed Design shall be either sealed and tested new duct systems or untested duct systems.	The Standard Design shall be sealed and tested new duct systems.

Condition	Proposed Design	Standard Design
Additions Served by Extensions of Existing Duct Systems	The Proposed Design shall be either 1) sealed and tested new duct systems, if the total combined existing plus new duct system meets the leakage requirements for tested and sealed new duct systems; 2) sealed and tested duct systems in existing buildings, if the total combined existing plus new duct system meets the leakage requirements for tested and sealed duct systems in existing buildings; or 3) untested duct systems.	The Standard Design shall be sealed and tested duct systems in existing buildings.
Alterations with Prescriptive Duct Sealing Requirements when Entirely New Duct Systems are Installed	The Proposed Design shall be either 1) sealed and tested new duct systems; or 2) untested duct systems.	The Standard Design shall be sealed and tested new duct systems.
Alterations with Prescriptive Duct Sealing Requirements when Existing Duct Systems are extended or replaced or when new or replacement air conditioners are installed	The Proposed Design shall be either 1) sealed and tested new duct systems, if the total combined existing plus new duct system meets the leakage requirements for tested and sealed new duct systems; 2) sealed and tested duct systems in existing buildings, if the total combined existing plus new duct system meets the leakage requirements for tested and sealed existing duct systems; or 3) untested duct systems.	The Standard Design shall be sealed and tested duct systems in existing buildings.
Alterations for which Prescriptive Duct Sealing Requirements do not apply	The Proposed Design shall be either 1) sealed and tested new duct systems, if the new duct system or the total combined existing plus new duct system meets the leakage requirements for tested and sealed new duct systems; 2) sealed and tested duct systems in existing buildings, if the total combined existing plus new duct system meets the leakage requirements for tested and sealed existing duct systems; or 3) untested duct systems.	The Standard Design shall be untested duct systems.

~~3.1.3~~3.1.4 Output Reports for Existing Buildings

There are special output requirements for existing building components and characteristics that are passed directly to the standard design and compared against themselves in the custom budget process. In general, these ~~must~~shall be reported on separate forms and in a distinctly different typestyle from new or altered building components and characteristics in output reports. To accommodate all printers this is done by using lowercase and UPPERCASE output to differentiate these inputs. See Section 2.~~7~~ 2 ~~Required Standard Reports~~Compliance Documentation for more details.

To accommodate the optional capabilities of partial compliance and modeling additions with the existing building and alterations and deter circumvention of the standards, all ACMs ~~MUST~~SHALL report all new or altered user-entered building components and descriptive information completely in UPPERCASE TYPE. ACMs with the capabilities for partial compliance, modeling additions with the existing building or modeling alterations in an existing building ~~MUST~~SHALL report all information on existing, previously-approved building components that are not altered in lowercase type. This is to insure that the local enforcement agency can readily determine the use of existing building components that do not have to meet the requirements of the building energy efficiency standards and distinguish these modeled components from those that are new or have been altered.

~~*3.1.3.1 Graphical Output*~~

~~*Description:*~~

~~ACMs may include the ability to produce graphical output to facilitate the plan checking process. As part of the output documentation, ACMs may graphically show building's orientation, floors, walls, roofs, windows, skylights, thermal zones, and building cavities such as courtyards and atria. ACMs may either:~~

~~1. Draw isometrics showing all four sides of the building with adequate detail to visually verify the building's exterior features and interior cavities, or~~

~~2. Draw two-dimensional drawings showing side views of the building with adequate detail to visually verify the building's exterior features.~~

~~The graphical output shall:~~

~~a) Show the building orientation,~~

~~b) Show the envelope features such as exterior walls, exterior floors, roofs, exterior windows and skylights, and etc., including their size by showing their dimensions and location,~~

~~c) Show each footprint indicating the boundaries and dimensions of the footprint and the boundaries of occupancy and system areas associated with each footprint including occupancy types and system types, and boundaries and dimensions for building's interior cavities.~~

~~d) Show the boundaries of the building's thermal zones.~~

~~e) Show the overall U-factors of the opaque surfaces as well as the glazing on the drawing or in a tabulated form with reference to the drawing.~~

~~*3.2 Overview of the Modeling Process*~~

~~The modeling rules in the optional modeling approach are organized to facilitate the ACM software development and building modeling. The steps for modeling a building are as follows:~~

~~1. The user shall define construction types and layers of the proposed building envelope assemblies. The ACM shall model the proposed assemblies according to user inputs.~~

~~2. The ACM shall build the reference design envelope assemblies using the same construction types, materials and heat capacities as the proposed assemblies. The ACM shall exclude any exterior and interior insulation but, instead, shall adjust the cavity insulation R-value to meet the overall U-factor requirements for the assembly type and the climate zone.~~

~~3. The user shall define the building's footprint(s). A footprint is the plan view of a floor or a group of floors. A footprint includes building's interior cavities such as courtyards and atria. A building has one or more footprints. Each floor may have its own footprint or several floors of a building may have the same footprint. Floors have the same footprint if:~~

~~a) They have identical plan views, i.e., having the same shape and area after including all building's interior cavities,~~

~~a) They have identical floor to ceiling distances, and~~

~~a) They have identical window patterns.~~

~~This will reduce the amount of user inputs for modeling the envelope features of high-rise buildings which may only have a few different footprints. For each footprint, the user shall model the envelope features of the lowest floor having that footprint and the ACM shall duplicate these features for all floors of the high-rise building having that footprint.~~

~~A footprint is surrounded by exterior walls separating the conditioned spaces from the ambient air and by demising walls separating the conditioned space from enclosed unconditioned spaces. By definition, indirectly conditioned spaces are considered conditioned spaces and are included in the footprint area. Footprints are modeled using the coordinates of their vertices relative to the building's reference point.~~

~~4. For every footprint, the user shall model exterior walls using the assemblies modeled in paragraph (1) above. The ACM shall model demising walls as *adiabatic* surfaces. ACMs may use an equivalent method to DOE-2's "FLOOR-MULTIPLIER" to model floors of the building which have the same footprint. Users must not model interior walls separating conditioned spaces within a building. ACMs shall account for the thermal capacity of interior walls according to the rules which will be described later in this manual. Exterior and demising walls are modeled using the coordinates of their vertices relative to the building's reference point.~~

~~5. The user shall describe all interior cavities--atria and courtyards--by specifying the coordinates of their vertices relative to the building's reference point for each and every footprint or floor where the cavity's plan view changes. Atria are considered as conditioned spaces but courtyards are considered as outside (ambient air). If an atrium is indirectly conditioned, it shall be modeled as part of adjacent spaces according to the rules which will be described later in this manual.~~

~~6. The user shall describe the occupancy areas by specifying the coordinates of the occupancy area's vertices relative to the building's reference point. An occupancy area is the space used by an occupancy type selected from Table 2-1.~~

~~7. The user shall describe building's system areas by specifying the coordinates of the area's vertices relative to the building's reference point. A system area is the space served by an HVAC system. For each HVAC system serving the building, the user must input the area that the system serves.~~

~~8. The ACM shall automatically create thermal zones in accordance with the building geometry, occupancy areas, system areas and space types (interior or exterior) using the rules described in this manual. Each exterior space facing a different orientation or is within 45 degrees of that orientation is modeled as a separate exterior zone. All interior zones within a system area having the same occupancy type are combined. If a space has several occupancy types and is served by several HVAC systems, each combination of occupancy type, system type, space type (interior or exterior), and whether the exterior zone is next to a North facing wall, East facing wall, South facing wall, and West facing wall is modeled as a separate thermal zone.~~

~~Thermal zones less than 300 ft^2 are combined with adjacent zones within the same HVAC system. Exterior zones next to courtyards must not be combined with other exterior zones even if they face the same orientation.~~

~~ACMs shall model the interface between thermal zones as air walls. ACMs shall model interior floors as input by the user, but must not allow modeling any interior walls. Walls separating conditioned spaces from indirectly conditioned spaces are considered interior walls. The heat capacity effect of interior walls and furniture shall be approximated by the program according to rules described in Section 2.2.2.13. The following example will illustrate zoning of a building with three occupancy types and six HVAC systems:~~

~~*Example:* Heavy lines show the building's footprint. Short dashed lines are boundaries separating system areas, long dashed lines are boundaries separating occupancy areas (from Table 2-1), and light solid lines show the thermal zone boundaries, which must be created by ACMs according to the rules described in Section 3.5.1.2.~~

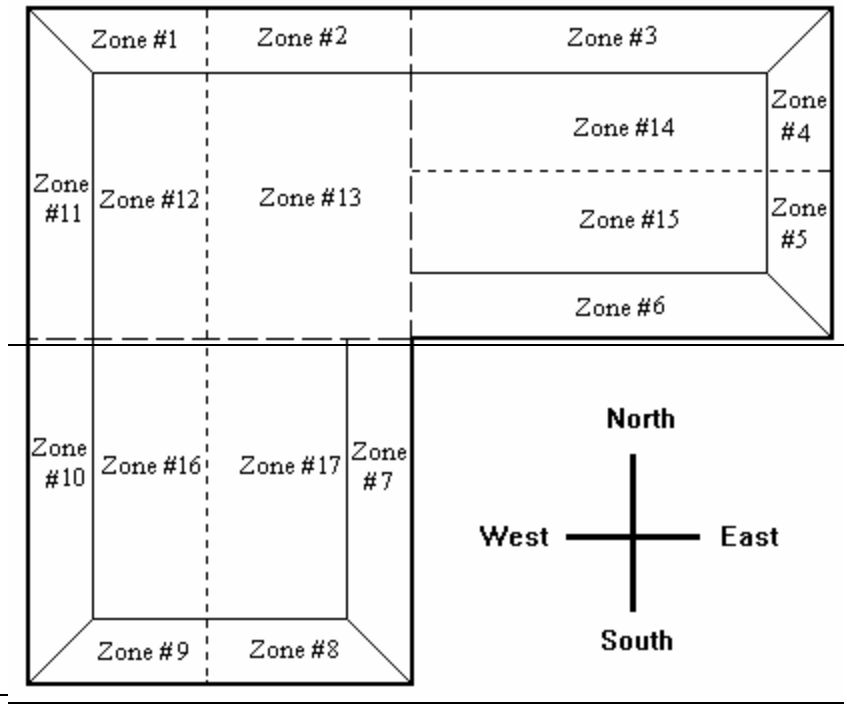

~~3.3Building Shell - Optional Capabilities~~

~~ACMs may use the following optional modeling approach for modeling the building shell. Unless otherwise specified in this section, ACMs shall determine the standard design according to the requirements of Section 2.2 Required Modeling Capabilities for the Building Shell.~~

~~All ACMs must receive inputs for each different opaque surface (wall, roof/ceiling, or floor) that separates conditioned from unconditioned space or the ground, including each demising wall (which consequently includes each party wall.) These inputs include construction framing type, orientation and tilt, location and area for each exterior surface. An ACM must also allow the user to enter inputs to determine heat transfer and heat capacity characteristics of exterior opaque surfaces for the proposed design. The heat capacity of standard design exterior surface is identical to the heat capacity of the proposed design exterior surface. Based on this heat capacity, the standards specify a required U-factor for the exterior surface that is used as the heat transfer characteristic for the standard design exterior surface.~~

~~For all exterior surfaces/assemblies it is assumed that the U-factors listed in the building standards include an exterior air film R-value of 0.17 h-ft^2-^{o}F/Btu, which the reference method strips off and replaces with a simulated outside air film resistance. Azimuthal orientation and tilts of surfaces must be entered to the nearest degree.~~

~~Standard design requirements are labeled as applicable to one of the following options:~~

~~Existing unchanged~~

~~Altered existing~~

~~New~~

~~All~~

~~with the default condition for these four specified conditions being "All." An ACM without the optional capability of analyzing additions or alterations must classify and report all surfaces as "All."~~

~~All ACMs must separately report information about demising walls, fenestration in demising walls, exterior walls, and fenestration in exterior walls. Demising walls and demising wall fenestration separate conditioned~~

~~and enclosed unconditioned spaces. Party walls are always considered to be demising walls when they separate spaces controlled or occupied by different tenants. For the purpose of compliance, the adjacent enclosed spaces not controlled by the tenant of the given space or by a single manager of the building are unconditioned. This assumption means that party walls are treated as demising walls and adjacent tenant spaces are modeled as enclosed unconditioned spaces. To avoid modeling adjacent spaces that are not part of the permit, for purposes of standards compliance, an ACM must assume that the demising wall is adiabatic and no heat transfer occurs through it.~~

~~3.3.1 Building Footprint~~

~~*3.3.1.1 Footprint Identifiers*~~

~~*Description:*~~

~~A unique alphanumeric identifier for each footprint of the building. A footprint is the plan view of a floor which includes both directly and indirectly conditioned spaces and building cavities such as atria and courtyards but excludes unconditioned spaces.~~

~~Atria are considered conditioned spaces. If no HVAC system is specified for an atrium, ACMs shall assume that it is indirectly conditioned. Courtyards are considered as outside with ambient air. Walls, floors, and ceilings separating conditioned spaces from courtyards are considered exterior walls, floors, and roofs.~~

~~A footprint is surrounded by exterior walls separating conditioned spaces from the ambient air and by demising walls separating conditioned spaces from enclosed unconditioned spaces.~~

~~Floors of a building with identical plan view (having the same shape and area including building's interior cavities), floor to ceiling height, and window patterns have the same footprint.~~

~~*3.3.1.2 Floor Identifiers*~~

~~*Description:*~~

~~A unique alphanumeric identifier for each floor or a group of floors of the building having the same footprint identifier.~~

~~*3.3.1.3 Number of Floors with the Same Footprint*~~

~~Description:~~	~~The number of floors having the same footprint.~~
~~DOE Keyword:~~	~~FLOOR-MULTIPLIER~~
~~Input Type:~~	~~Required~~
~~Tradeoffs:~~	~~Neutral~~
~~Modeling Rules for Proposed Design:~~	~~ACMs must accept input for the number of floors that have the same footprint identifier according to the construction documents of the building.~~
~~Modeling Rules for Reference Design (All):~~	~~The reference design shall use the same number of floors as the proposed design.~~

~~*3.3.1.4 Footprint Area*~~

~~Description:~~	~~The total area of each footprint including directly and indirectly conditioned spaces and the building's interior cavities such as courtyards and atria. A footprint is surrounded by exterior and demising walls with the exception of those separating the space from courtyards.~~
~~DOE Keyword:~~	~~N/A~~
~~Input Type:~~	~~Required~~

~~Tradeoffs:~~	~~Neutral~~
~~Modeling Rules for Proposed Design:~~	~~For each footprint of the proposed design, ACMs shall accept input for the area according to the construction documents.~~
~~Modeling Rules for Reference Design (All):~~	~~The reference design shall use the same footprint area as the proposed design.~~

~~*3.3.1.5 Footprint Geometry*~~

~~Description:~~	~~Footprint geometry is described by the coordinates of its vertices defining the exterior perimeter of the footprint. The User must define the footprint geometry of the floor or the lowest floor of a group of floors having that footprint relative to the building's fixed reference point.~~
~~DOE Keyword:~~	~~X, Y, Z~~
~~Input Type:~~	~~Required~~
~~Tradeoffs:~~	~~Neutral~~
~~Modeling Rules for Proposed Design:~~	~~For each footprint of the proposed design, ACMs shall accept input for the footprint vertices of the floor or the lowest floor of the building having that footprint according to the construction documents.~~
~~Modeling Rules for Reference Design (All):~~	~~The reference design shall use the same footprint vertices as the proposed design.~~

~~*3.3.1.6 Geometry of Building's Interior Cavities*~~

~~Description:~~	~~The geometry of a building's interior cavities are described by the coordinates of the cavity vertices relative to the building's fixed reference point. Building's interior cavities include courtyards and atria.~~
~~DOE Keyword:~~	~~X, Y, Z~~
~~Input Type:~~	~~Required~~
~~Tradeoffs:~~	~~Neutral~~
~~Modeling Rules for Proposed Design:~~	~~The user shall describe all interior cavities -- atria and courtyards -- by specifying the coordinates of their vertices for each floor that the cavity's plan view changes even if those floors have the same footprints. ACMs shall accept input for the vertices according to the construction documents.~~
~~Modeling Rules for Reference Design (All):~~	~~The reference design shall use the same cavity vertices as the proposed design.~~

~~3.3.2 Above-Grade Envelope~~

~~*3.3.2.1 Footprint Identifiers*~~

~~Footprint Identifier as described above.~~

~~*3.3.2.2 Exterior Partitions*~~

~~Above-grade exterior partitions surrounding each footprint that separate a conditioned space from the ambient air, attic space, crawl space, courtyard, or unconditioned spaces that are not enclosed. Exterior walls, raised floors, roofs, and ceilings are exterior partitions.~~

~~Return air plenums are considered conditioned spaces and must be modeled as part of the adjacent conditioned space.~~

~~3.3.2.3 Rectangular Exterior Partitions~~

~~Description:~~	~~The area of rectangular exterior partitions for a footprint are defined by specifying the width of the partition and a height equal to the total height of the floor.~~
~~DOE Keyword:~~	~~EXTERIOR-WALL~~ ~~WIDTH~~ ~~HEIGHT~~ ~~FLOOR-MULTIPLIER~~
~~Input Type:~~	~~Required~~
~~Tradeoffs:~~	~~Neutral~~
~~Modeling Rules for Proposed Design:~~	~~For each exterior partition of each floor, ACMs shall receive inputs for the height and width as they occur in the construction documents. The reference program shall use the DOE-2 Keyword "FLOOR-MULTIPLIER" to model identical floors belonging to the same footprint.~~
~~Modeling Rules for Reference Design (All):~~	~~The standard design shall model each exterior partition with the same height and width as the proposed design.~~

~~3.3.2.4 Non-Rectangular Exterior Partitions~~

~~Description:~~	~~The area of non-rectangular exterior partitions are defined by specifying the coordinates of the partition's vertices relative to a fixed reference point on the plane of the partition. The partitions height is equal to the total height of the floor.~~
~~DOE Keyword:~~	~~EXTERIOR-WALL~~ ~~X, Y~~ ~~FLOOR-MULTIPLIER~~
~~Input Type:~~	~~Required~~
~~Tradeoffs:~~	~~Neutral~~
~~Modeling Rules for Proposed Design:~~	~~For each exterior partition of each floor, ACMs shall receive inputs for the coordinates of its vertices as they occur in the construction documents. The reference program shall use the DOE-2 Keyword "FLOOR-MULTIPLIER" to model identical floors belonging to the same footprint.~~
~~Modeling Rules for Reference Design (All):~~	~~The standard design shall model each exterior partition with the same coordinates for the vertices as the proposed design.~~

~~3.3.2.5 Positions of Exterior Partitions~~

~~Description:~~	~~The coordinates describing positions of exterior partitions surrounding each footprint relative to the building's fixed reference point.~~
~~DOE Keyword:~~	~~X, Y, Z~~
~~Input Type:~~	~~Required~~
~~Tradeoffs:~~	~~Neutral~~
~~Modeling Rules for Proposed Design:~~	~~ACMs shall receive inputs for coordinates describing positions of the exterior partitions of the proposed building as they occur in the construction documents. ACMs shall also verify the connectivity of the building's exterior envelope including demising partitions (see Section 2.2.2.5). If this check fails, the ACM shall abort the~~

	~~compliance run and issue a message indicating which exterior partitions and/or demising partitions are not connected.~~
~~Modeling Rules for Reference Design (All):~~	~~The reference design shall position the exterior partitions in the same manner as they occur and are modeled in the proposed design. Note: ACMs shall not include in the model removed exterior and demising partitions as part of an alteration.~~

~~*3.3.2.6 Positions of Fenestration Products*~~

~~Description:~~	~~The coordinates describing positions of the fenestration products in exterior partitions relative to a fixed reference point on the partition.~~
~~DOE Keyword:~~	~~X, Y, SETBACK~~
~~Input Type:~~	~~Required~~
~~Tradeoffs:~~	~~Neutral~~
~~Modeling Rules for Proposed Design:~~	~~ACMs shall accept position coordinates of fenestration products in exterior partitions as shown in the construction documents. ACMs shall also verify that the fenestration product is within the specified partition. If the verification fails, ACMs shall abort the compliance run and issue a message to the user that the verification has failed.~~
~~Modeling Rules for Reference Design (All):~~	~~Positions of fenestration products in exterior partitions shall be modeled in the same manner as they occur and are modeled in the proposed design.~~

~~Note: ACMs shall not include in the model any removed fenestration as part of an alteration.~~

~~*3.3.2.7 Self Shading*~~

~~Description:~~	~~ACMs may model shading of building surfaces by other portions of the building, such as one wing of a building shading another wing from direct sunlight.~~
~~DOE Keyword:~~	~~SHADING-SURFACE~~ ~~SHADING-DIVISIONS~~
~~Input Type:~~	~~Required~~
~~Tradeoffs:~~	~~Neutral~~
~~Modeling Rules for Proposed Design:~~	~~The ACM shall model any building self-shading as input by the user, according to the plans and specifications for the building.~~
~~Modeling Rules for Reference Design (All):~~	~~The ACM must model building self-shading in the standard design exactly as the proposed design.~~

~~*3.43.2*~~ *Building Occupancy ~~- Optional Capabilities~~*

3.2.1 Alternate Occupancy Selection Lists

The user of an ACM ~~must~~shall select an occupancy type from certain allowed tables. ACMs that do not have separate selection lists for ventilation occupancy assumptions and all other occupancy assumptions ~~must~~shall allow the user to select from the occupancies and sub-occupancies listed in Table N2-~~1~~ 2 and Table N2-~~2~~ 3 or to select from an officially approved alternative sub-occupancy list that maps into those occupancies. ACMs that have separate occupancy selection lists for ventilation assumptions and other assumptions ~~must~~shall use the occupancy selections given in tables in the building energy efficiency standards or approved alternative lists of occupancies. The occupancies listed in Table ~~1-F~~121-A in the Standards ~~must~~shall be used for ventilation occupancy selections and the occupancies listed in Table ~~1-N~~146-C~~D~~ in the Standards ~~must~~shall be

used for selecting the remaining occupancy assumptions. Alternatively specific occupancy selection lists approved by the Commission that map into Tables ~~1-F~~121-A or 146-C~~D~~ ~~1-N~~ may be used.

A building consists of one or more occupancy types. ACMs may not combine different occupancy types. Tables ~~N2-1 and~~ N2-2 and N2-3 describe all of the schedules and full load assumptions for occupants, lighting, infiltration, receptacle loads and ventilation. Full load assumptions are used for both the proposed design and the ~~reference design~~standard design compliance simulations.

~~3.4.1Occupancy Assignment~~

~~3.4.1 3.4.1.1 Occupancy Area~~

~~Description:~~	~~A building consists of an occupancy type or several occupancy types selected from Table 2-1. Each occupancy type occupies a user specified occupancy area of the building. ACMs must be able to model a minimum of fifteen (15) occupancy areas. Each occupancy area may include two or more sub-occupancy areas selected from Table 2-2.~~ ~~The reference method will model all interior floors separating occupancy areas and will model air walls between occupancy areas within each floor.~~
~~DOE-2 Command~~	
~~DOE-2 Keyword(s)~~	~~X, Y, Z~~
~~Input Type~~	~~Default~~
~~Tradeoffs~~	~~Neutral~~
~~Modeling Rules for Proposed Design:~~	~~ACMs must require the user to input the area and coordinates for the vertices of each occupancy area relative to the building's reference point. Occupancy area vertices shall define the location of each occupancy type within the building.~~ ~~The reference program shall model interior floors between occupancy areas as they occur in the construction documents. For each floor, the reference program shall model air walls between occupancy areas.~~ ~~ACMs must require the user to input information for each interior floor including construction, orientation, tilt, position and dimensions as it occur in the construction documents.~~ ~~ACMs must model air walls with zero (0) heat capacity and an overall U-factor of 1.0 Btu/h-ft^2-°F.~~
~~Default:~~	~~One occupancy type in the entire building.~~
~~Modeling Rules for Reference Design (All):~~	~~The standard design shall use the same vertices and area for each occupancy area as the proposed design.~~ ~~The reference design shall model the same interior floors and air walls as the proposed design with the same surface areas, locations, thermal properties and construction.~~

~~3.4.2 3.4.1.2 Occupancy Types~~

~~Description:~~

~~A modeled building must have at least one defined occupancy type. A default occupancy of "unknown" may be used to fulfill this requirement. Alternative Calculation Methods (ACMs) must model the following occupancy types. Occupancies that are considered as subcategories of these occupancies are listed below each occupancy. These occupancy types are also listed in Table 2-1 of this manual:~~

~~Commercial and Industrial Work~~

~~including both general and precision work, barber and beauty shops, laundries, and dry cleaning~~

~~Grocery Store~~

~~including convenience stores~~

~~Industrial and Commercial Storage~~

~~Medical/Clinical~~

~~Office~~

~~including banks & financial institutions, courtrooms, accounting, art, design drafting and engineering spaces~~

~~Other~~

~~including corridors, restrooms, and support areas as well as ALL others not specifically mentioned herein for spaces without lighting plans~~

~~Religious Worship, Auditorium, Convention Center~~

~~including exhibit display areas and lobbies associated with religious worship spaces, auditoriums, and convention centers~~

~~Restaurant~~

~~including dining rooms, kitchens, hotel function areas, bars, cocktail lounges, casinos~~

~~Retail and Wholesale Store~~

~~School~~

~~including classrooms, day care, kindergarten, primary and secondary schools, trade schools, training centers, colleges, universities, research areas, laboratories~~

~~Theater~~

~~including movie theaters, live stage performance theaters, malls, arcades, and atria~~

~~Unknown~~

~~Again, ACMs with default occupancies must use the "unknown" occupancy category as a default.~~

~~Alternative Calculation Methods (ACMs) must also model the following sub- occupancy types. These sub-occupancy types are listed in Table 2-2 of this manual. (Note: Some additional sub-occupancies are listed as subcategories of the sub-occupancies listed in Table 2-2):~~

~~Auditorium~~

~~Auto Repair Workshop~~

~~Bank/Financial Institution~~

~~including Banks, Savings & Loans, Credit Unions, Mortgage and Title Insurance~~

~~Bar, Cocktail Lounge and Casino~~

~~including cabarets, night clubs, bingo parlors and other gaming rooms with smoking~~

~~Beauty Shop~~

~~Barber Shop~~

~~Classroom~~

~~including areas for instructional purposes~~

~~Commercial/Industrial Storage~~

~~including warehouses and storage and stock rooms~~

~~Commercial/Industrial Work - General, High Bay~~

~~including manufacturing areas~~

~~Commercial/Industrial Work - General, Low Bay~~

~~including manufacturing areas~~

~~Commercial/Industrial Work - Precision~~

~~Note: the use of this category is an exceptional condition and must be documented on the exceptional conditions checklist.~~

~~Convention, Conference and Meeting Center~~

~~Corridor, Restroom and Support Area~~

~~including all circulation spaces, elevators, escalators, stairways, and janitorial room~~

~~Courtrooms~~

~~Dining Area~~

~~including cafeterias and ballrooms~~

~~Dry Cleaning (Coin Operated)~~

~~Dry Cleaning (Full Service Commercial)~~

~~Electrical, Mechanical Rooms~~

~~Exercising Rooms and Gymnasium~~

~~including day care, health clubs, sports arena, exercise rooms, dojos, spas, pools, saunas, and massage rooms~~

~~Exhibit Display Area and Museum~~

~~including art galleries~~

~~Grocery Sales Area~~

~~High-Rise Residential~~

~~Hotel Function Area~~

~~Hotel/Motel Guest Room~~

~~Kitchen and Food Preparation~~

~~Laundry~~

~~Library - Reading Area~~

~~Library - Stacks~~

~~Lobby - Hotel~~

~~Lobby - Main Entry~~

~~including depots, terminals, and stations~~

~~Lobby - Office Reception/Waiting~~

~~Locker/Dressing Room~~

~~Lounge/Recreation~~

~~Mall, Arcade and Atrium~~

~~Medical and Clinical Care~~

~~including dental care, optical care~~

~~Mixed Occupancy~~

~~Office~~

~~including accounting, counseling, art, drafting, design, insurance, stock & bond brokers, filing areas, conference rooms, mail rooms, telecommunications, and computer areas~~

~~Other~~

~~Religious Worship~~

~~including churches, synagogues, temples, tabernacles, mosques, basilicas, cathedrals, missions, chapels, meditation areas, altars, shrines, worship centers, funeral homes, and memorials~~

~~Retail Sales, Wholesale Showroom~~

~~including pharmacies, drug stores, floral shops, video tape rentals~~

~~Smoking Lounge~~

~~Theater (Motion Picture)~~

~~Theater (Performance)~~

~~including dance halls and discotheques~~

~~Unknown~~

> ~~Please note that this list is comprehensive given the categories "other" and "unknown." Occupancies and sub-occupancies other than those listed herein cannot be approximated by another occupancy or sub-occupancy unless that substitution has been approved by the Executive Director of the Commission in writing.~~
>
> ~~The selection lists accommodate unknown or miscellaneous unlisted occupancies. Any known occupancy not reasonably similar (as determined by the local building official) to an occupancy specified on a Commission-approved list is considered "other." Occupancies unknown to the applicant must use the occupancy type "unknown."~~

~~DOE Keyword:~~

~~N/A~~

~~Input Type:~~

~~Required~~

~~Tradeoffs:~~

~~Neutral~~

~~Modeling Rules for Proposed Design:~~

~~ACMs must require users to specify the occupancy type(s) for the building being modeled. For each occupancy type, ACMs must require the user to identify if lighting plans are included or have already been submitted. ACMs shall determine the occupancy type as follows:~~

~~Lighting compliance not performed. The ACM must require the user to select the occupancy type(s) for the building from the occupancies reported in Table 2-1. The ACM must use the occupancy assumptions of this Table for compliance simulations.~~

~~Lighting compliance performed. The ACM must require the user to select the occupancy type(s) for the building from the occupancies reported in Table 2-1. The ACM must also require input for the percentage of the occupancy area that each sub-occupancy type from Table 2-2 occupies. The areas of sub-occupancy types must not be modeled. The ACM must use the sub-occupancy assumptions from Table 2-2 for compliance simulations.~~

~~Tailored lighting and tailored ventilation are permitted as exceptional condition modifications to these default assumptions, but must be reported on the PERF-1 as exceptional conditions and on other applicable compliance forms. The tailored lighting values cannot be traded off for other features. Refer to sections for Tailored Lighting and Tailored Ventilation for respective requirements for each of these adjustments.~~

~~ACMs must use the same default assumptions, listed in Tables 2-1 through 2-6 of this manual including schedules, occupant densities, outside air ventilation rates, lighting loads, receptacle loads and service water heating loads. ACMs may have a separate occupancy list for ventilation versus other assumptions subject to the constraint that occupancy schedule types cannot be mixed. Users must select occupancy of a given space based upon the proposed or anticipated occupancy not on the amount of lighting desired. ACM input must emphasize occupancy choices and similarities not lighting choices. ACMs may not report the occupancy default lighting watts per square foot on the screen when the user is selecting occupancies for a space. After the occupancies are selected by the user, the lighting determined from the user's occupancy selection may appear on a separate entry screen as a default entry in the lighting power input if the user has not already entered it.~~

~~Modeling Rules for Reference Design (All):~~

~~ACMs must model the same occupancy type(s) and sub-occupancy type(s) as the proposed building. ACMs must use the same default assumptions found in Tables 2-1 through 2-6. Tailored lighting and tailored ventilation are permitted as a modification to these default assumptions but must be reported on the PERF-1 exceptional condition list. Refer to sections for Tailored Lighting and Tailored Ventilation for respective requirements for each of these adjustments.~~

~~3.4.3 Occupancy Lighting~~

3.2.2 Lighting Controls~~3.4.2.1~~

Description:	Lighting controls have specific lighting power adjustment factors as listed in Table ~~1-L~~146-A~~B~~ of the standards and any ACM may use these lighting control credits (subject to the requirements and specifications in Section 119 of the standards) just as they would with prescriptive compliance, except for the performance approach, credit cannot be taken for lighting controls that are required by other provisions of the standards, especially Sections 119 and 131. For lighting controls required by 131(c)2 (either a multi-level automatic daylighting control or an astronomical multi-level time switch control), no credit is permitted for the minimally compliant control (astronomical multi-level time switch control), which is modeled in both the proposed building and the standard building. However, if automatic multi-level daylighting controls are used, the proposed building benefits from an additional lighting power reduction. The ACM Compliance Documentation ~~must~~shall describe how to determine which controls can be used for credit subject to this restriction. ACMs may explicitly model any of the lighting controls listed in Table ~~1-L~~146-A~~B~~ of the standards. The ACM ~~must~~shall require the user to input: 1) the area occupancy to which lighting controls are being applied; and, 2) the lighting control strategy or strategies being used. ACMs allow input for lighting control only when an area occupancy type has been input for the zone. ACMs with this optional capability ~~must~~shall automatically generate a LTG-3, Lighting Controls Credit Worksheet, as part of the compliance documentation.
DOE Keyword:	LIGHTING-W/SQFT
Input Type:	Required
Tradeoffs:	Yes
Modeling Rules for Proposed Design:	The ACM shall model lighting controls in the proposed design as input by the user according to plans and specifications for the building.

Modeling Rules for ~~Reference~~Standard Design (New & Altered Existing):	The ~~reference design~~standard design shall model only the lighting controls that are required by other provisions of the standards
Modeling Rules for ~~Reference~~Standard Design (Existing Unchanged):	The ~~reference design~~standard design shall model lighting controls that are installed in the existing building.

3.2.3 Light Heat to Zone~~3.4.2.2~~

Description:	The reference method assumes that 100% of the heat due to lighting goes to the zone where the lighting is located. An optional capability may vary the lighting heat to the zone from 70%-100% and, consequently, the lighting heat to the return air from 0% to 30%, as a function of the type of lighting fixtures used in the zone. In the absence of persuasive evidence to the contrary, direct user entry of the allocation of lighting heat to the zone and the return air is considered an enforcement problem and is considered grounds for disqualification of an ACM from the approval process.
DOE Keyword:	LIGHT-TO-SPACE
Input Type:	Required
Tradeoffs:	Neutral
Modeling Rules for Proposed Design:	ACMs shall model the lighting heat-to-space and lighting heat-to-return air bases on the type of lighting fixtures used in the space as shown in the construction documents.
Modeling Rules for ~~Reference~~Standard Design (New & Altered Existing):	The ~~reference design~~standard design shall use the same lighting heat-to-space and lighting heat-to-return air as the proposed design.
Modeling Rules for ~~Reference~~Standard Design (Existing Unchanged):	The ~~reference design~~standard design shall model lighting heat-to-space and lighting heat-to-return air based on the lighting fixtures installed in the existing building.

~~3.5~~3.3 HVAC Systems ~~&~~ and Plants ~~Building - Optional Capabilities~~

This section describes the ~~rules for proposed design assumptions of~~ optional HVAC systems and plant capabilities. The ACM ~~must~~shall use the performance curves in the DOE-2 Supplement (Version 2.1E~~D~~). If the described optional capability is not a capability of the Commission's reference computer program, vendors ~~must~~shall include the required performance data for that capability. The assumptions in this section may be different than the corresponding assumptions specified in the Required Systems and Plant Capabilities, in order to model optional capabilities accurately.

Standard design requirements are labeled as applicable to one of the following options:

- Existing unchanged
- Altered existing
- New
- All

with the default condition for these four specified conditions being "All." An ACM without the optional capability of analyzing additions or alterations ~~must~~shall classify and report all surfaces as "All."

~~3.5.1 Thermal Zoning~~

~~*3.5.1.1 System Areas*~~

~~*Description:*~~	~~A space or collection of spaces within a building served by an HVAC system. ACMs must be able to model a minimum of fifteen (15) system areas.~~
~~*DOE Keyword:*~~	~~X, Y, Z~~
~~*Input Type:*~~	~~Default~~
~~*Tradeoffs:*~~	~~Neutral~~
~~*Modeling Rules for Proposed Design:*~~	~~For each system serving the building, ACMs must require the user to describe the area being served by the system by inputting the area and coordinates for the vertices of the system area relative to building's fixed reference point.~~ ~~The reference program shall model an air wall between two system areas unless an air wall has already been modeled at that location as a boundary for two occupancy areas.~~ ~~ACMs must require the user to input information for each modeled air wall including orientation, tilt, position and dimensions as they occur in the construction documents.~~ ~~ACMs must model air walls with zero (0) heat capacity and an overall U-factor of 1.0 Btu/h-ft^2-°F.~~
~~*Default:*~~	~~One system type in the entire building.~~
~~*Modeling Rules for Reference Design (All):*~~	~~The standard design shall use the same system areas as the proposed design.~~ ~~The standard design shall model each air wall with the same thermal properties, orientation and tilt, position, and dimensions as the proposed design.~~

~~*3.5.1.2 Thermal Zones*~~

~~Description:~~	~~A space or collection of spaces within a building having sufficiently similar space-conditioning requirements that those conditions could be maintained with a single controlling device. ACMs shall be able to model a minimum of 50 thermal zones.~~
~~DOE Keyword:~~	~~ZONE~~
~~Input Type:~~	~~Prescribed~~
~~Tradeoffs:~~	~~Neutral~~
~~Modeling Rules for Proposed Design:~~	~~ACMs shall not accept input from the user for modeling thermal zones. Instead, ACMs must divide each floor of the building into thermal zones according to the following procedure:~~

1. ~~Determine the ratio (R) of the floor's total conditioned area to the gross exterior wall area associated with the conditioned space.~~
2. ~~For each combination of occupancy type, system type, and exterior wall orientation create a perimeter zone. The floor area of each perimeter zone shall be the gross exterior wall area of the zone times R or 1.25, whichever is smaller.~~
3. ~~ACMs shall model the exterior space adjacent to each wall orientation as a separate exterior zone. ACMs shall include spaces adjacent to walls which are within 45 degrees of each orientation in the zone belonging to that orientation.~~

4. ~~For cases where R is greater than 1.25, ACMs shall create an interior zone for each combination of occupancy type and system type. The floor area of the interior zone shall be the total system area less the floor area of the perimeter zones created in paragraphs 2 and 3 above.~~

5. ~~ACMs shall prorate the roof area and the floor area among the zones according to the floor area of each zone. ACMs shall prorate the roof and floor areas among the perimeter zones created in paragraphs 2 and 3 above according to the floor area of each exterior zone.~~

6. ~~Skylights shall be assigned to interior zones. If the skylight area is larger than the roof area of the interior zone, then the skylight area in the interior zone shall be equal to the roof area in the interior zone and the ACM shall prorate the remaining skylight area among the perimeter zones based on the floor area.~~

7. ~~For each modeled system area, if the area of the zone is less than 300 ft^2, ACMs shall combine it with its adjacent zone of the same type (interior or exterior) which is served by the same HVAC system.~~

8. ~~Courtyards are considered outside or ambient air. Walls, floors, and roofs separating conditioned spaces from courtyards are exterior walls, floors, and roofs. ACMs shall create an exterior zone for each wall orientation separating the conditioned space from the courtyard. ACMs shall not combine these exterior zones with other exterior zones even if their exterior walls have the same orientation.~~

9. ~~ACMs shall model spaces adjacent to demising walls as interior zones. ACMs shall combine these zones with other interior zones within the same occupancy area and system area.~~

10. ~~ACMs shall include the exterior wall imperfections (exterior walls extending out for shading windows) in the exterior zone belonging to that exterior wall.~~

11. ~~ACMs shall model air walls between thermal zones. ACMs must not allow the user to model any interior walls. Walls separating conditioned spaces from indirectly conditioned spaces are considered interior walls. The heat capacity effect of interior walls and furniture shall be approximated by the program according to rules described in Section 2.2.2.13. ACMs shall model the actual interior floors between the thermal zones.~~

~~Example 1: Consider the following footprint. Using the above rules 1 through 6 the thermal zones will be as shown in the following drawing:~~

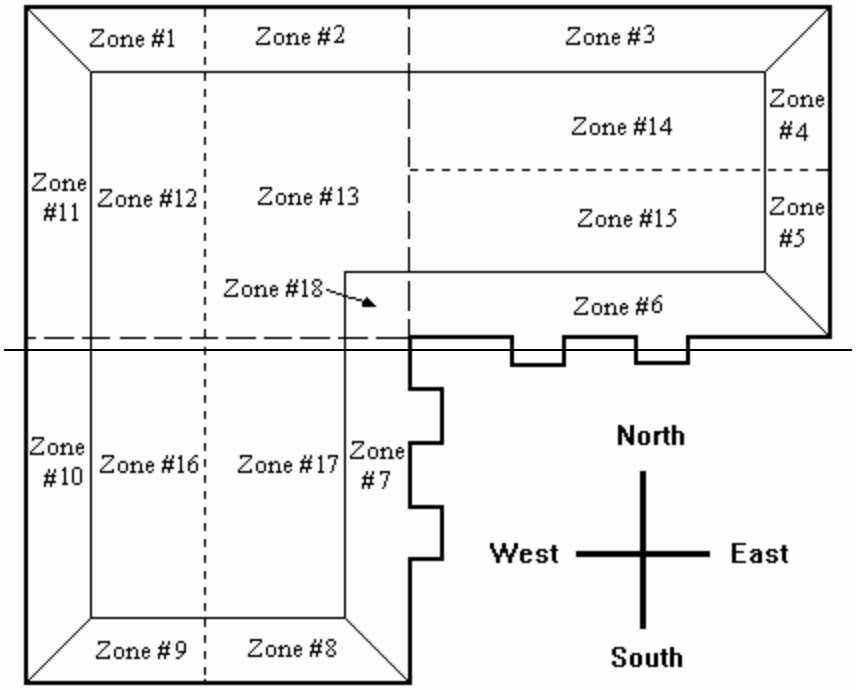

~~The zone areas are as follows:~~

~~Zone #1~~	~~500 ft^2~~	~~Exterior~~
~~Zone #2~~	~~750 ft^2~~	~~Exterior~~
~~Zone #3~~	~~1100 ft^2~~	~~Exterior~~
~~Zone #4~~	~~500 ft^2~~	~~Exterior~~
~~Zone #5~~	~~500 ft^2~~	~~Exterior~~
~~Zone #6~~	~~1300 ft^2~~	~~Exterior~~
~~Zone #7~~	~~1100 ft^2~~	~~Exterior~~
~~Zone #8~~	~~750 ft^2~~	~~Exterior~~
~~Zone #9~~	~~500 ft^2~~	~~Exterior~~
~~Zone #10~~	~~900 ft^2~~	~~Exterior~~
~~Zone #11~~	~~900 ft^2~~	~~Exterior~~
~~Zone #12~~	~~1300 ft^2~~	~~Interior~~
~~Zone #13~~	~~2200 ft^2~~	~~Interior~~
~~Zone #14~~	~~1400 ft^2~~	~~Interior~~
~~Zone #15~~	~~1400 ft^2~~	~~Interior~~
~~Zone #16~~	~~1300 ft^2~~	~~Interior~~
~~Zone #17~~	~~1500 ft^2~~	~~Interior~~
~~Zone #18~~	~~225 ft^2~~	~~Interior~~

~~Zone #18 is an interior zone whose area is less than 300 ft^2. Therefore, according to rule #7 above, zone #18 is absorbed by the adjacent interior zone within the same HVAC system. The zoning will change as follows:~~

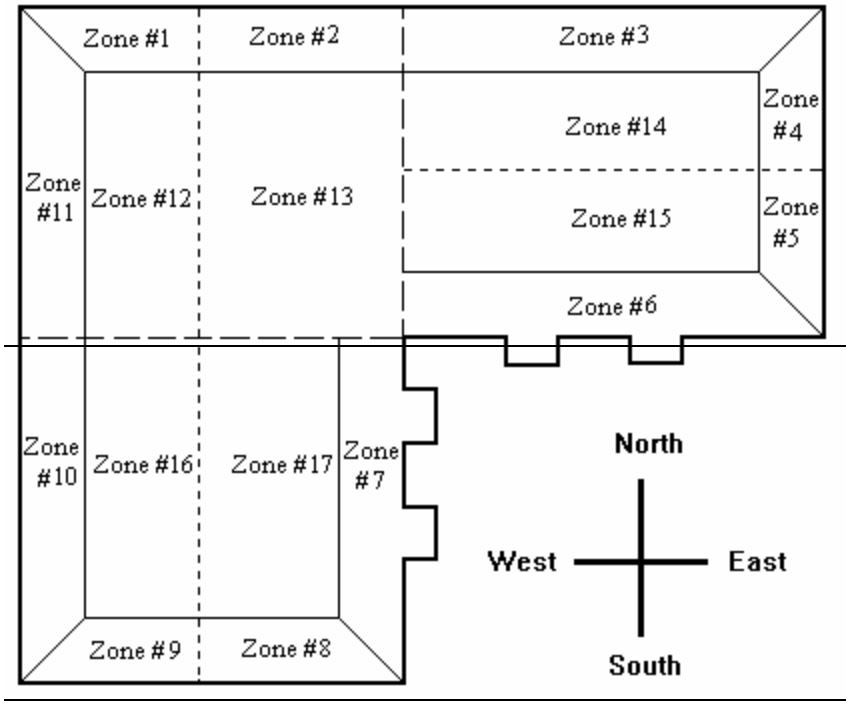

~~Example 2: Consider the following footprint. The heavy solid lines are the boundaries separating the conditioned space from the ambient air. The dashed line indicates separation between two different occupancy areas (from Table 2-1). Each occupancy area is served by a different HVAC system. The footprint includes a courtyard in the middle. The zoning will be as follows:~~

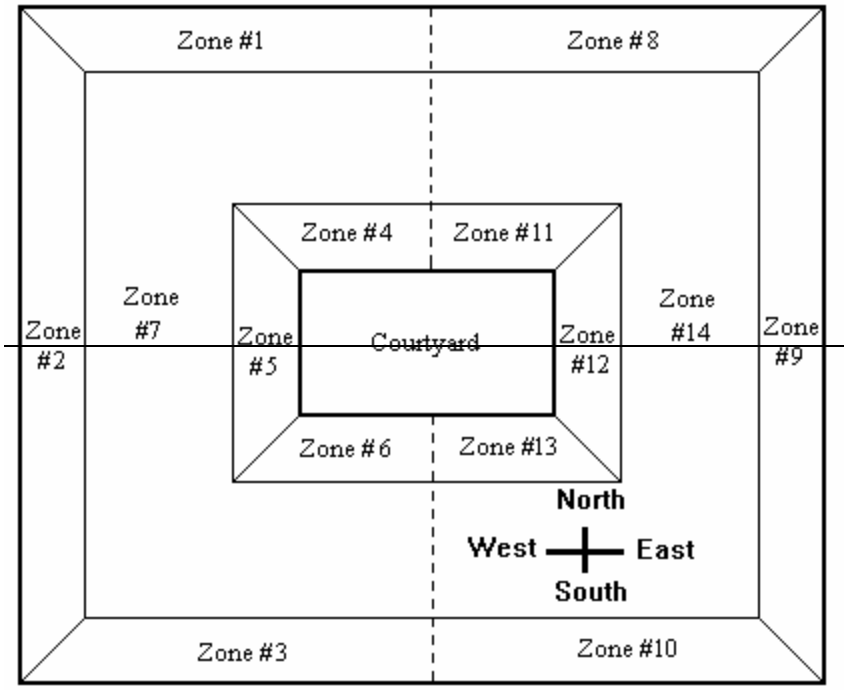

~~The zone areas are as follows:~~

~~Zone #1~~	~~1100 ft^2~~	~~Exterior~~
~~Zone #2~~	~~1800 ft^2~~	~~Exterior~~
~~Zone #3~~	~~1100 ft^2~~	~~Exterior~~
~~Zone #4~~	~~500 ft^2~~	~~Exterior~~
~~Zone #5~~	~~700 ft^2~~	~~Exterior~~
~~Zone #6~~	~~500 ft^2~~	~~Exterior~~
~~Zone #7~~	~~6900 ft^2~~	~~Interior~~
~~Zone #8~~	~~1100 ft^2~~	~~Exterior~~
~~Zone #9~~	~~1800 ft^2~~	~~Exterior~~
~~Zone #10~~	~~1100 ft^2~~	~~Exterior~~
~~Zone #11~~	~~500 ft^2~~	~~Exterior~~
~~Zone #12~~	~~700 ft^2~~	~~Exterior~~
~~Zone #13~~	~~500 ft^2~~	~~Exterior~~
~~Zone #14~~	~~6900 ft^2~~	~~Interior~~

~~All zones are larger than 300 ft^2; therefore, zones will not be combined.~~

~~Example 3: This building is the same as the building in Example 1, except that the east facing wall is a demising wall.~~

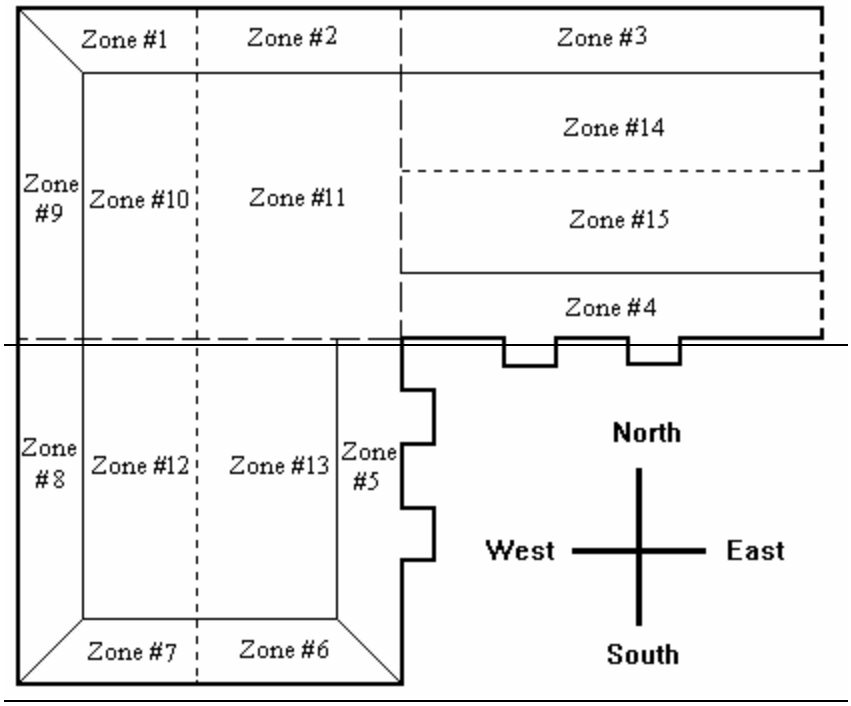

~~*Modeling Rules for Reference Design (All):*~~

~~ACMs shall model the thermal zones of the reference design in the same manner as they are modeled in the proposed design.~~

~~3.5.2 Heating & Cooling Equipment~~

~~3.5.3 3.5.2.1 Types of HVAC Systems and Central Plants~~

~~***Description:***~~	~~ACMs may have the capability to model other types and variations of HVAC systems and central plants. These variations may incorporate alternative designs for:~~ ~~? Single zone heating and cooling equipment~~ ~~? Direct and indirect evaporative cooling equipment~~ ~~? Multiple zone air distribution systems~~ ~~? Fan volume control~~ ~~? Water chilling~~ ~~? Building waste energy recovery~~ ~~? Building heat rejection~~ ~~? Renewable energy sources~~ ~~? Air and water economizer cycles~~ ~~The Commission has approved a list of these optional capabilities for performance compliance. These capabilities are documented below, along with all required inputs and assumptions for both standard and proposed designs.~~
~~DOE Keyword:~~	~~SYSTEM-TYPE~~ ~~PLANT-EQUIPMENT~~ ~~TYPE~~ ~~INSTALLED-NUMBER~~
~~Input Type:~~	~~Required~~
~~Tradeoffs:~~	~~Yes~~
~~Modeling Rules for Proposed Design:~~	~~ACMs shall model the systems and plants of the proposed design as input by the user according to the plans and specifications of the proposed building.~~
~~Modeling Rules for Reference Design (New):~~	~~ACMs shall always determine the standard design according to the requirements of the Required Systems and Plant Capabilities.~~
~~Modeling Rules for Reference Design (Existing Unchanged & Altered Existing):~~	~~ACMs shall model the existing systems and plants an they occur in the existing building. If the permit involves alterations, ACMs shall model the system before alterations.~~

3.3.1 Absorption Cooling Equipment~~3.5.2.2~~

Description: ACMs may model heat operated (absorption) cooling equipment with the following features:

- *One-stage absorption.* Heat operated water chiller. With this option, the ACM ~~must~~shall account for absorber and refrigerant pump energy and purge cycle.
- *Two-stage absorption.* Heat operated water chiller using two-stage or double effect concentrator. With this option, the ACM ~~must~~shall account for absorber and refrigerant pump energy and purge cycle.
- *Economizer.* For absorption chiller, absorber solution flow to the concentrator is

modulated as a function of load.

- *Steam fired.* Absorption chiller uses steam as the heat source.
- *Hot water fired.* Absorption chiller uses hot water as the heat source.
- *Direct fired.* Absorption chiller uses fossil fuel as heat source.

DOE Keyword:	PLANT-EQUIPMENT ABSOR1-CHLR ABSOR2-CHLR ABSORG-CHLR
Input Type:	Required
Tradeoffs:	Yes
Modeling Rules for Proposed Design:	The ACM shall model absorption equipment in the proposed design as input by the user according to the plans and specifications for the building. The ACM shall use performance relationships according to the DOE 2.1 default equipment curves or the user shall enter manufacturer's performance data for gas absorption chillers as described in Section 2.5.3.16 and the ACM shall use the performance curves derived from the user-entered data.
Modeling Rules for ~~Reference~~Standard Design (New):	ACMs shall determine the standard design according to the requirements of the Required Systems and Plant Capabilities and **Error! Reference source not found.**~~Figure N2-1~~.
Modeling Rules for ~~Reference~~Standard Design (Existing Unchanged & Altered Existing):	ACMs shall model the existing system as it occurs in the existing building. If the permit involves alterations, ACMs shall model the system before alterations.

~~Modeling Rules and Algorithms~~

~~Equation N3-1 $CAP_n = (CAP) \times (-0.00075(T_n)^2 + 0.13555T_n - 5.10683) \times 1000$~~

~~Where:~~

~~CAP_n = Adjusted capacity~~

~~CAP = Rated capacity at 95° dh outdoor ai~~

~~T_n = Temperature in the hour of the calculation~~

~~Note: If $T_n \leq 90°F$ then $CAP_n = CAP \times 1.0177 \times 1000$ for hour n~~

~~The hourly part load ratio is calculated using the corresponding hourly cooling loads and capacities.~~

~~Equation N3-2 PLRn = Ln / CAPn~~

~~Where::~~

~~PLR_n = Part Load Ratio~~

~~L_n = Load in the hour of the calculation~~

~~The hourly HIR part load adjustment factor (HIR-PLR) is calculated as a function of that hour's PLR.~~

~~Equation N3-3 $HIR\text{-}PLR_n = 0.24651277(PLR_n)^2 + 0.61798084(PLR_n) + 0.1355115$~~

~~Where:~~

~~HIR COOLING HIR= 1.657 Cooling Heat Input Ratio (= 1/COP or Gas Input/Cooling Output)~~

~~HEATING HIR= 1.382 Heating Heat Input Ratio (= 1/COP or Gas Input/Heating Output)~~

~~Note: If $PLR_n \leq 0.1$ then $HIRAF = 2 \times PLR_n$~~

~~The hourly COP is a function of that hour's outdoor dry bulb temperature.~~

~~Equation N3-4 $COP_n = (-0.00665285T_n + 1.221512) + (COP_{coolinggas} - 0.60)$~~

~~Where:~~

~~COP_n Hourly COP~~

~~T_n Outside air temperature for the hour~~

~~$COP_{coolinggas}$ Rated COP at 95oF dv outdoor air~~

~~Note: If $T_n \leq 90°F$ then $COP_n = 0.6228+(COP_{coolinggas} - 0.60)$~~

~~The hourly HIR is calculated by taking the inverse of the COP and multiplying by the HIR-PLR for that hour.~~

~~Equation N3-5 $HIR_n = (1/COP_n) \times HIR\text{-}PLR_n$~~

~~Where:~~

~~HIR_n The hourly HIR is calculated by taking the inverse of the COP and multiplying by the HIR-PLR for that hour.~~

~~COP_n Hourly COP~~

~~HIR Part Load adjustment factor~~

~~PLR_n Part Load Ratio~~

~~Gas cooling gas energy consumption (GCGEC) is calculated by multiplying the HIR by the hourly capacity calculated using Equation 6-13.~~

~~Equation N3-6 $GCGEC_n = CAP_n \times HIR_n$~~

~~Where:~~

~~$GCCEC_n$ Gas cooling electric energy consumption~~

~~CAP_n Adjusted capacity~~

~~HIR_n The hourly part load adjustment factor~~

~~Gas cooling electric energy consumption (GCEEC) is calculated as show in Equation 6-14~~

~~Equation N3-7~~ ~~$GCEEC_a = (PPC + FE \times ((CAP \times 1000)/12000)) \times PLR_a$~~

~~Where:~~

~~$GCEEC_a$ Gas cooling electric energy consumption~~

~~PPC Parasitic Power consumption (w) at full load (outdoor unit only, exclude indoor fan power)~~

~~FE Indoor Fan Energy (optional – will default to 153W/ton unless user enters measured value in W/ton). If the actual fan energy is claimed this shall be noted in the Special Features and Modeling Assumptions. Gas absorption unit hourly cooling capacity is calculated from the corresponding outdoor temperatures using Equation 6.8.~~

~~CAP Rated capacity at 95° dh outdoor air~~

~~PLR Part Load Ratio~~

3.3.2 Gas-Engine Driven Chillers and Heat Pumps

Description: ACMs may model engine driven cooling equipment with the following features:

- *Engine Driven Chiller.* Fossil fuel engine driven, compressor water chiller.
- *Engine Driven Heat Pump.* Fossil fuel engine driven heat pump.
- *Air Cooled Condenser.* Chiller or Heat Pump uses water to cool condenser.
- *Water Cooled Condenser.* Chiller or Heat Pump uses water to cool condenser.
- *Engine Waste Heat Recovery.* Waste heat is recovered from engine coolant for reuse in a space heating application.
- *Exhaust Heat Recovery.* Heat is extracted from engine exhaust gases for reuse in a space heating application (see Section 3.3.4~~3.5.2.4~~).

DOE Keyword: PLANT-EQUIPMENT
ENG-CHLR
or
HEAT-SOURCE
GAS-HEAT-PUMP

Input Type: Required

Tradeoffs: Yes

Modeling Rules for Proposed Design: The ACM shall model gas engine driven equipment in the proposed design as input by the user according to the plans and specifications for the building. The ACM shall use performance relationships as established by the DOE 2.1 default equipment curves.

Modeling Rules for Reference Standard Design (New): ACMs shall determine the standard design according to the requirements of the Required Systems and Plant Capabilities and **Error! Reference source not found.**.

Modeling Rules for Reference Standard Design (Existing Unchanged & Altered Existing):	ACMs shall model the existing system as it occurs in the existing building. If the permit involves alterations, ACMs shall model the system before alterations.

3.3.3 Chiller Heat Recovery~~3.5.2.4 Heating Equipment Options~~

Description:	ACMs may model double bundle condensers on cooling equipment for heat recovery.
DOE Keyword:	N/A
Input Type:	Required
Tradeoffs:	Yes
Modeling Rules for Proposed Design:	The ACM shall model heating equipment options in the proposed design as input by the user according to the plans and specifications for the building.
Modeling Rules for ~~Reference~~Standard Design (New):	The ACM shall model the ~~reference design~~standard design according to the requirements of the Required Systems and Plant Capabilities.
Modeling Rules for ~~Reference~~Standard Design (Existing Unchanged & Altered Existing):	ACMs shall model the existing system as it occurs in the existing building. If the permit involves alterations, ACMs shall model the system before alterations.

3.3.4 Exhaust Heat Recovery~~3.5.2.5~~

Description: ACMs may model the following methods of heat recovery as input by the user.

- *Heat pipe.* Heat recovered from exhaust air is transferred to supply air via passive heat transfer coil (typically using refrigerant as the medium). No mechanical energy is required for heat recovery. With this option, the ACM ~~must~~shall account for additional coil pressure drops.
- *Hydronic loop.* Heat recovered from exhaust air is transferred to supply air via hydronic system including coils in each air stream and water circulation system (run-around system). With this option, the ACM ~~must~~shall account for circulating pump energy and accounts for additional coil pressure drops.
- *Heat wheel sensible.* Heat recovered from exhaust air is transferred to supply air via mechanically rotating heat wheel. The wheel may transfer sensible heat. With this option, the ACM ~~must~~shall account for heat wheel motor energy and accounts for additional coil pressure drops.

DOE Keyword:	RECOVERY-EFF SUPPLY-1 thru SUPPLY-5 DEMAND-1 thru DEMAND-5
Input Type:	Required
Tradeoffs:	Yes
Modeling Rules for Proposed Design:	The ACM shall model heat recovery options in the proposed design as input by the user according to the plans and specifications for the building.
Modeling Rules for	The ACM shall model the ~~reference design~~standard design according to the

~~Reference~~Standard Design (New):	requirements of the Required Systems and Plant Capabilities.
Modeling Rules for ~~Reference~~Standard Design (Existing Unchanged & Altered Existing):	ACMs shall model the existing system as it occurs in the existing building. If the permit involves alterations, ACMs shall model the system before alterations.

3.3.5 Optional ~~3.5.2.6 Proposed~~ System Types

Description

ACMs may model HVAC system types not included in the list of 5 minimum standard and proposed system types. Specifically, ACMs may model the following proposed system types:

- **System 6:** Hydronic Heat Pump. Zone cooling/heating capability may be provided by a zonal hydronic heat pump connected to a central water heat source/heat rejection loop, shared by other zonal hydronic heat pumps.
- **System 7:** Single Fan/Dual Duct. A single fan blows supply air through the heating and cooling coils and into the hot and cold supply ducts, with either a constant or variable volume fan. Zone terminal units mix hot and cold supply air streams to meet zone loads.
- **System 8:** Dual Fan/Dual Duct. Two separate central fan systems, one for heating and one for cooling, using either constant or variable fans, distribute air to the building. Zone terminal units mix hot and cold supply air streams to meet zone loads. If this system is included, the ACM ~~must~~shall also simulate heating supply air reset, described below.
- **System 9:** Direct and Indirect Evaporative Cooling. Evaporative cooling may be modeled as the only cooling system or as a precooler for another cooling system. The systems may utilize direct evaporative cooling only; indirect evaporative cooling only; indirect/direct evaporative cooling; or evaporatively precooled condensers. Direct or indirect evaporative precooling of supply air may also be modeled but no tests or specifications are defined for these options. Users ~~must~~shall be able to specify evaporative cooler fan capacity and brake horsepower (bhp), water pump capacity and brake horsepower (bhp), and whether or not the evaporative cooler can operates in conjunction with another cooling system. When evaporative cooling systems are modeled, default measures of direct and indirect (where applicable) cooling efficiencies ~~must~~shall be supplied. Subject to Commission approval, the user may be allowed to override these defaults.
- **System 10:** Underfloor Air Distribution Systems (UFAD). A central system provides air (typically 60°F to 68°F) to an underfloor plenum. It is distributed to the space using either passive or active grilles (cooling), across reheat coils or through fan-powered boxes (typically variable speed with reheat coils). Although this system uses warmer supply air temperatures it usually has a similar airflow to a conventional overhead system as it provides displacement of some of the thermal loads. The modeling software shall make accommodations for the user to specify the following system features: assignment of a percentage of the lighting, miscellaneous equipment and occupant loads to the return air plenum; application of variable speed fan powered boxes with a minimum airflow setting; application of a demand based pressure reset of the airflow; application of supply temperature reset by either demand or outdoor dry-bulb temperature; and assignment of low system static pressures.

- **System 11:** Single Zone Variable Air Volume Systems.

  Minimum turn down for airflow shall be no lower than that certified by the manufacturer as required to protect the cooling coil from freezing.

Perimeter Systems. Independent HVAC systems (typically heating only) which serve perimeter zones in addition to a primary system (typically cooling only). Perimeter systems differ from zone terminal systems in that they are independent: They do not connect to the primary system but supply heating/cooling through separate air outlets or heat transfer surfaces. There are two common types of perimeter systems.

- **System 12 ~~10~~:** Convective/radiant. Zone perimeter system may be a convective or radiant system, such as baseboard or radiant ceiling panels.
- **System 13 ~~21~~:** Constant volume system. Zone perimeter system provides heating/cooling by constant air volume supply to each zone served. System may or may not have outside air supply capability.

Perimeter systems may incorporate the following features (NOTE that perimeter systems may be specified as serving the same zone(s) as any of Systems 1 through 10~~9~~):

- *Master zone.* Used when the perimeter system heating/cooling supply is controlled to satisfy the thermostat of a given zone.
- *Multiple zones.* Used when the perimeter system serves more than one zone of the primary system. (This allows modeling of "fighting" between the primary and perimeter system.)
- *Electric.* Used when the perimeter system heating is electric resistance.
- *Hydronic.* Used when the perimeter system cooling/heating coil is served by a central hydronic system.
- DX. Used when the perimeter system cooling is provided by direct expansion refrigerant coils served by a heat pump or other compression system (see PLANT equipment.)

DOE Keyword:	SYSTEM-TYPE
Input Type:	Required
Tradeoffs:	Yes
Modeling Rules for Proposed Design:	Optional proposed systems shall be modeled as input by the user, according to the plans and specifications for the building, subject to all of the restrictions specified in the Required Systems and Plant Capabilities.
Modeling Rules for ~~Reference~~Standard Design (New):	Standard system types and applicable system parameters are chosen according to **Error! Reference source not found.**~~Figure 2-1~~. The air flow and supply air temperature for the standard design will be optimally controlled in the reference method. All efficiency descriptors shall be determined according to the requirements of the Required Systems and Plant Capabilities.
Modeling Rules for ~~Reference~~Standard Design (Existing Unchanged & Altered Existing):	ACMs shall model the existing system as it occurs in the existing building using DOE-2 default performance curves. If the permit involves alterations, ACMs shall model the system before alterations.

3.3.6 Combined Hydronic Systems ~~3.5.2.7~~

Nonresidential Buildings

Combined hydronic water heating systems for nonresidential buildings may be modeled as an optional capability. Vendor-proposed prescribed assumptions for this method are crucial. All user-defined inputs ~~must~~shall be enforceable. Variables which are difficult to plan and field verify should be incorporated as prescribed inputs. The residential water heating calculation methodology is a useful example for compliance-based combined hydronic heating system modeling.

High-Rise Residential Buildings~~3.5.2.8 Combined Hydronic Systems for~~

Combined hydronic water heating systems evaluation for high-rise residential buildings should be evaluated in a manner consistent with the low-rise residential combined hydronic system methodology. A vendor-proposed optional capability should incorporate the majority of efficiency measures evaluated by the low-rise residential method and should be reasonably consistent with those procedures, especially near the transition between low-rise and high-rise buildings. Inputs and analysis of wood stoves and wood-fired boiler are not required (in fact discouraged) to be included as part of the optional capability.

3.3.7 Alternate Equipment Performance Data~~3.5.2.9 Equipment Efficiency~~

Description

ACMs may model equipment according to factory supplied performance data. The following performance relationships may be modeled:

All Packaged Cooling Equipment

~~oCapacity as a function of entering wet-bulb and outside dry-bulb temperatures~~

~~oCooling electrical efficiency as a function of entering wet-bulb and outside dry-bulb temperatures~~

~~oCooling electrical efficiency as a function of part-load ratio~~

~~oSensible cooling capacity as a function of entering wet-bulb and outside dry-bulb temperatures~~

See Chapter 2.**Error! Reference source not found.Error! Reference source not found.**

~~?~~Packaged VAV Cooling Equipment Only

~~o~~• Capacity as a function of supply air quantity

~~o~~• Cooling electrical efficiency as a function of supply air quantity

~~o~~• Sensible cooling capacity as a function of supply air quantity

~~?~~Water Chillers

~~o~~• Capacity as a function of exiting chilled water and entering condenser water temperatures

~~o~~• Cooling electrical efficiency as a function of exiting chilled water and entering condenser temperatures

~~?~~Furnaces

~~o~~• Fossil fuel furnace efficiency

~~?~~Heat Pumps

~~o~~• ~~Heating electrical efficiency as a function of outdoor dry-bulb and entering dry-bulb temperature~~See Chapter 2.

~~2~~ Boilers

- Fossil fuel boiler efficiency

DOE Keyword:	COOLING-EIR HEATING-HIR FURNACE-HIR HW-BOILER-HIR BOILER-EIR BOILER-HIR
Input Type:	Required
Tradeoffs:	Yes
Modeling Rules for Proposed Design:	ACMs shall model performance of proposed systems and plant equipment, except for fans, using DOE-2 default performance curves for the equipment specified in the construction documents for the building.
Low Value:	Minimum efficiency requirement
Modeling Rules for ~~Reference~~Standard Design (New):	ACMs shall model performance of all systems and plant equipment, except for fans, according to requirements of the Required Systems and Plant Capabilities, and the default performance curves listed in the DOE 2.1E supplement.
Modeling Rules for ~~Reference~~Standard Design (Existing Unchanged & Altered Existing):	ACMs shall model the existing system as it occurs in the existing building using the system's actual efficiencies according to requirements of the Required Systems and Plant Capabilities and DOE-2 default performance curves. If the permit involves alterations, ACMs shall model the system before alterations.

3.3.8 Cooling Towers Types~~3.5.2.10~~

Description: ACMs may model several options for cooling tower operation which may be specified at the user's option. These options are described below:

- *Closed circuit.* Condenser water is cooled indirectly by a heat exchanger which is evaporatively cooled (fluid cooler). With this option, the ACM ~~must~~shall account for spray pump energy. If the ACM has this capability, it ~~must~~shall require the user to specify if the cooling tower uses an open or closed circuit.
- *Axial fan.* An axial fan provides ambient air flow across tower fill or closed tower heat exchanger.
- *Natural draft.* Ambient air flow across tower fill is natural draft (not mechanically driven) as defined by user input tower dimensional data and draft factor.
- *Discharge dampers.* Tower (condenser) capacity is controlled by modulating fan discharge dampers.
- *Bypass.* Tower leaving water temperature is controlled by bypassing tower return water around tower to the supply line, thereby cooling only a portion of the water flow.
- *Variable speed drive.* Tower (condenser) capacity is controlled by varying fan motor speed.

DOE Keyword:	TWR-CAP-CTRL TWR-MIN-FAN-SPEED FLUID-BYPASS
Input Type:	Required

Tradeoffs:	Yes
Modeling Rules for Proposed Design:	The ACM shall model all optional cooling tower features as input by the user according to the construction documents for the building.
Modeling Rules for ~~Reference~~Standard Design (New):	The ACM shall model the ~~reference design~~standard design according to the requirements of the Required Systems and Plant Capabilities.
Modeling Rules for ~~Reference~~Standard Design (Existing Unchanged & Altered Existing):	ACMs shall model the existing system as it occurs in the existing building using the system's actual efficiencies. If the permit involves alterations, ACMs shall model the system before alterations.

3.3.9 Pump Controls~~3.5.2.11~~

Description: ACMs may model several optional pump design, operation and control strategies which may be specified at the user's option. These options are described below:

- *Variable flow.* Used when the variable flow, constant temperature system flow rate varies as a function of load.
- *Riding curve.* Pump(s) ride characteristic performance curve as a function of head pressure. Head pressure will vary depending on the water demands of cooling and heating coils and the amount of water bypassing different zones.
- *Two-speed/stages.* Used when the pumps are staged, or pump has two-speed motor, to maintain pressure requirements. Pump(s) ride characteristic curve between stages.

DOE Keyword:	TWR-PUMP-HEAD TWR-IMPELLER-EFF TWR-MOTOR-EFF CIRC-IMPELLER-EFF CIRC-MOTOR-EFF CIRC-HEAD CIRC-PUMP-TYPE DHW-PUMP-ELE
Input Type:	Required
Tradeoffs:	Yes
Modeling Rules for Proposed Design:	ACMs shall model optional features of proposed design pumping systems as input by the user according to plans and specifications for the building.
Modeling Rules for ~~Reference~~Standard Design (New):	The ACM shall model the ~~reference design~~standard design according to the requirements of the Required Systems and Plant Capabilities.
Modeling Rules for ~~Reference~~Standard Design (Existing Unchanged & Altered Existing):	ACMs shall model the existing system as it occurs in the existing building. If the permit involves alterations, ACMs shall model the system before alterations.

3.3.10 Air Foil Centrifugal Fan with Discharge Dampers~~3.5.2.12 Fan Volume Control~~

Description: The ACM may model the following optional types of fan volume control, as input by

the user. Default fan curves are given in terms of DOE-2 curve-fit instructions.

Air foil centrifugal fan with discharge dampers (ride fan curve). Fan volume is controlled by a controllable damper mounted at the fan discharge, or the fan "rides" its characteristic fan curve against varying system pressure.

AF-FAN-W/DAMPERS = CURVE-FIT
TYPE = QUADRATIC
OUTPUT-MIN = 0.68
DATA = (1.0,1.0)
(0.9,0.95)
(0.8,0.90)
(0.7,0.86)
(0.6,0.79)
(0.5,0.71)

Vane-axial fan with variable pitched blades. Fan volume is controlled by varying blade pitch.

VANE-AXIAL-FAN = CURVE-FIT
TYPE = QUADRATIC
OUTPUT-MIN = 0.15
DATA = (1.0,1.0)
(0.9,0.78)
(0.8,0.60)
(0.7,0.48)
(0.6,0.36)
(0.5,0.27)
(0.4,0.20)
(0.3,0.23)
(0.2,0.22)

DOE Keyword: FAN-CONTROL

Input Type: Prescribed

Tradeoffs: Neutral

Modeling Rules for Proposed Design: The ACM shall model supply and return fans chosen by the user and as documented on the plans and specifications for the building for the proposed design fan system. The ACM shall use the performance data given in this manual.

Modeling Rules for ~~Reference~~Standard Design (New): The ACM shall model the ~~reference design~~standard design according to the requirements of the Required Systems and Plant Capabilities.

Modeling Rules for ~~Reference~~Standard Design (Existing Unchanged & Altered Existing): ACMs shall model the existing system as it occurs in the existing building. If the permit involves alterations, ACMs shall model the system before alterations.

3.3.11 Separate Control for Supply, Return and Relief Fans ~~3.5.2.13 Multiple Volume Controls~~

Description: ACMs may model different fan volume control strategies for supply, return and relief fans. If the ACM has this capability the user may specify a different strategy for each fan in the fan system.

DOE Keyword: FAN-CONTROL

Input Type:	Required
Tradeoffs:	Yes
Modeling Rules for Proposed Design:	The ACM shall model fan volume controls for each proposed design fan as input by the user. If different fan volume controls are not input for supply, return and/or relief fans, the ACM shall assume all fan volume controls for the entire fan system to be the same as that specified for the supply fan.
Modeling Rules for ~~Reference~~Standard Design (New):	The ACM shall model the ~~reference design~~standard design according to the requirements of the Required Systems and Plant Capabilities.
Modeling Rules for ~~Reference~~Standard Design (Existing Unchanged & Altered Existing):	ACMs shall model the existing system as it occurs in the existing building. If the permit involves alterations, ACMs shall model the system before alterations.

3.3.12 Air Economizers Control Strategies~~3.5.2.14~~

Description: The ACM may model the following optional economizer control strategies when specified by the user:

- *Outside air enthalpy.* Economizer cooling is enabled as long as the outside air enthalpy is less than 29 Btu/lb.
- *Variable enthalpy.* Equivalent to the Honeywell W7400 or H205 humidity biased enthalpy control using set-curve A.
- *Differential dry-bulb.* Economizer cooling is enabled as long as the return air temperature is greater than the outside air temperature.
- *Differential enthalpy.* Economizer cooling is enabled as long as the return air enthalpy is greater than the outside air enthalpy.
- *Economizer High Limit.* When a differential controller is used, a high limit, above which the economizer cannot operate, may also be added. The high limit controller can either be a dry-bulb (set at 75 degrees), an enthalpy (set at 29 Btu/lb) or a variable enthalpy controller.
- *Non-integrated, two stage operation.* The economizer operates as the first stage of cooling until the cooling load cannot be met by the economizer. At this point, the economizer closes to the minimum position and mechanical cooling is used to meet the cooling load. If this strategy is selected, an outdoor high limit of 70 ODB or 28.5 Btu/lb shall be used.

DOE Keyword:	OA-CONTROL ECONO-LIMIT-T ECONO-LOCKOUT ENTHALPY-LIMIT DRYBULB-LIMIT
Input Type:	Default
Tradeoffs:	Yes
Modeling Rules for Proposed Design:	ACMs shall limit proposed design optional economizer control strategies to those listed in this section, including set points.
Default:	No economizer

Modeling Rules for ~~Reference~~Standard Design (New):	The ACM shall model the ~~reference design~~standard design according to the requirements of the Required Systems and Plant Capabilities.
Modeling Rules for ~~Reference~~Standard Design (Existing Unchanged & Altered Existing):	ACMs shall model the existing system as it occurs in the existing building. If the permit involves alterations, ACMs shall model the system before alterations.

3.3.13 Water Side Economizers~~3.5.2.15~~

Description

ACMs may model the following water side economizers when specified by the user:

- *Strainer cycle.* Used when cooling tower water is diverted to the main cooling coil for "free cooling" when the cooling tower leaving water temperature is low enough to meet the total building load. This type of water side economizer can only be used in place of, and cannot be used to supplement, mechanical cooling.
- *Series coil.* A cooling coil, connected to the condenser water loop ahead of the condenser, is placed in the air handler upstream of the main cooling coil. This coil is used to supplement mechanical cooling, when the cooling benefit is greater than the added pumping energy needed to circulate cooling tower water through the cooling coil.
- *Evaporator precooling (heat exchanger).* A heat exchanger is used to transfer heat from condenser water, prior to entering the condenser, and chilled water, prior to entering the evaporator, in order to precool the chilled water. If the difference between the return chilled water temperature and cooling tower leaving water temperature is large enough to provide a cooling benefit, the heat exchanger is used to supplement mechanical cooling.
- *Evaporator precooling (cooling tower).* Chilled water is circulated through a closed loop in the cooling tower before entering the evaporator. If the difference between the chilled water return temperature and outside wet-bulb temperature is large enough to provide a cooling benefit, chilled water is circulated to the cooling tower to supplement mechanical cooling.

DOE Keyword:	WS-ECONO WS-ECONO-MIN-DT WS-ECONO-XEFF CONDENSER-TYPE FLUID-VOLUME COND-FLOW-TYPE COND-WTR-FLOW
Input Type:	Default
Tradeoffs:	Yes
Modeling Rules for Proposed Design:	The ACM shall model the proposed system water side economizer as input by the user, according to the plans and specifications for the building. If a strainer cycle is specified, changeover temperature from economizer to mechanical cooling ~~must~~shall be set at 50°F.
Default:	No economizer

Modeling Rules for ~~Reference~~Standard Design (New):	The ACM shall model the ~~reference design~~standard design according to the requirements of the Required Systems and Plant Capabilities.
Modeling Rules for ~~Reference~~Standard Design (Existing Unchanged & Altered Existing):	ACMs shall model the existing system as it occurs in the existing building. If the permit involves alterations, ACMs shall model the system before alterations.

3.3.14 Zone Terminal Controls~~3.5.2.16~~

Description: ACMs may model the following optional features for zone terminal controls, as input by the user:

- *Constant volume.* Zone receives a constant volume of air regardless of thermostat signal.
- *Mixing hot deck/cold deck.* Zone temperature is controlled by mixing hot and cold air.
- *Induction.* Supply air induces room or return plenum air into the supply air stream.
- *Fan powered induction.* Zonal fan supplies return or room air optionally mixed with system supply air (if any).
- *Series.* Fan powered induction system where zonal fan is in series with primary system supply air. Fan runs continuously when central system is on providing constant volume to space.
- *Parallel.* Fan powered induction system where zonal fan is in parallel with primary system supply air. Primary supply is usually VAV. Fan cycles on only when heating is required.
- *Series/Parallel.* Fan powered induction system where zonal fan is in parallel with primary system supply air. Primary supply is usually VAV. Fan cycles on to maintain a minimum supply volume and when heating is required.

DOE Keyword:	TERMINAL-TYPE
Input Type:	Required
Tradeoffs:	Yes
Modeling Rules for Proposed Design:	The ACM shall model optional zone terminal control features as input by the user according to the plans and specifications for the building. If the TERMINAL-TYPE is specified as SERIES-PIU (series fan-powered induction system), the ACM shall use the following fan power: ZONE-FAN-KW = 0.000225
Modeling Rules for ~~Reference~~Standard Design (New):	The ACM shall model the ~~reference design~~standard design according to the requirements of the Required Systems and Plant Capabilities.
Modeling Rules for ~~Reference~~Standard Design (Existing Unchanged & Altered Existing):	ACMs shall model the existing system as it occurs in the existing building. If the permit involves alterations, ACMs shall model the system before alterations.

3.3.15 Solar Thermal Energy~~s3.5.2.17 Renewable~~

Description:	The depletable energy savings associated with solar collector systems ~~must~~shall be analyzed ~~according to~~ by the Commission~~certified methods~~. ~~such as f-Chart which have been approved by the Commission for use with the low-rise residential standards (see Alternative Calculation Method (ACM) Approval Manual for the 2001 Energy Efficiency Standards for Residential Buildings).~~ A nonresidential ACM may be approved with the optional capabilities of built-in ~~f-Chart~~ active ~~and/or passive~~ solar collector performance calculations. Vendors who wish to have their ~~n~~Nonresidential ACMs approved with either of these capabilities ~~must~~shall meet the requirements described in the R~~r~~esidential ACM manual.
DOE Keyword:	N/A
Input Type:	Default
Tradeoffs:	Yes
Modeling Rules for Proposed Design:	ACMs may model solar water heating as an energy source for service hot water heating only.
Default:	No renewable energy is used.
Modeling Rules for ~~Reference~~Standard Design (New):	ACMs shall not model renewable energy sources for any of the standard design energy use.
Modeling Rules for ~~Reference~~Standard Design (Existing Unchanged & Altered Existing):	ACMs shall model the existing system as it occurs in the existing building. If the permit involves alterations, ACMs shall model the system before alterations.

~~3.6~~3.4 Vendor Defined Optional Capabilities

Vendors may propose other optional capabilities not specifically described in this manual. In the proposal for vendor specified optional capabilities, the vendor shall include:

- Theoretical background and simulation algorithms
- Testing data and validation analysis for all specified capabilities
- Standard and proposed design assumptions
- Specific documentation requirements, addressing enforceability by building department personnel

The Commission, during the certification process, may require changes to the vendors' proposed methods in order to gain consistency with other vendors' proposing similar capabilities.

4. User's Manual and Help System Requirements ~~Alternative Calculation Method (ACM) Compliance Documentation~~

Each ACM vendor is required to publish a compliance supplement ~~to their normal program user's manual,~~ or an independent user's manual which explains how to use the ACM for ~~in which relevant~~ compliance ~~information is easily located and clearly presented~~with the Standards. The manual may also exist in electronic form, either on the user's workstation or web enabled. ~~The purpose of this required document is to facilitate compliance with the Standards and the use of the ACM for compliance purposes. This~~ The document ~~must~~shall deal with compliance procedures and user inputs to the ACM ~~rather than the internal workings and assumptions of the ACM that the ACM uses to determine budgets or compliance~~. Both the ACM and ~~its~~ the ~~compliance documentation~~User's Manual and Help System ~~must~~shall positively contribute to the user's ability and desire to comply with the Standards and to the enforcement agency's ease of verifying compliance. The ACM ~~Compliance Documentation~~User's Manual and Help System should minimize or reduce confusion and clarify compliance applications. The Commission may reject an ACM whose ACM ~~Compliance Documentation~~User's Manual and Help System does not serve ~~to~~ or meet these objectives. ~~All further references in this chapter to the "ACM Compliance Documentation" refer to the ACM Compliance Supplement or the ACM Compliance User's Manual.~~

4.1 Overview

The ACM ~~Compliance Documentation~~User's Manual and Help System ~~must~~ shall:

- D~~d~~escribe the specific procedures for using the ACM for compliance with the ~~Energy Efficiency~~ Standards ~~for Nonresidential Buildings~~.
- ~~The ACM Compliance Documentation~~ P~~must p~~rovide instructions for preparing the building input, using the correct inputs, and using each of the approved optional capabilities (or exceptional methods) for which the ACM is approved.
- Explain how to ~~Also included are procedures for~~ generat~~ing~~ e the standard compliance reports and related compliance documentation. A sample of ~~a~~ properly prepared compliance documentation ~~documented building analysis must~~ shall be included as part of the manual or help system. ~~.~~

The ACM ~~Compliance Documentation~~User's Manual and Help System serve~~s~~ two major purposes:

- It helps building permit applicants and others use the ACM correctly, and guides them in preparing complete compliance documentation ~~for compliance submittals~~to accompany building permit applications.
- It helps building department staff plan check permit applications for compliance with the ~~nonresidential s~~Standards.

The ACM ~~Compliance Documentation~~User's Manual and Help System serves as a crucial performance method reference in resolving questions concerning specific ACM program attributes, approved modeling capabilities and procedures in the context of both compliance and enforcement.

~~The Commission actively discourages vendors and applicants from describing the internal algorithms and assumptions and giving information that is not essential to the user to comply with the standards or to resolve compliance-related issues regarding ACM inputs. Once an ACM has been approved, users may not modify or manipulate many aspects that the ACM's calculation engine normally allows users to modify.~~

~~ACM users or vendors may disagree with the restrictions, assumptions, and limitations required for an ACM to be approved. However, the proper forum for debate regarding custom budget procedures and the details of the reference method is Commission workshops and hearings on the ACM Approval process and future revisions to this manual, not the front desk of the local enforcement agency or the pages of the ACM Compliance~~

~~Documentation. For example, the schedules used by the ACM may not be altered by the user and the schedules should not be described in the ACM compliance document. In a similar manner, the ACM Compliance Documentation should not report or describe information that is not directly related to ACM user inputs and required outputs needed for compliance or information needed to clarify questions about ACM user inputs for compliance-related issues.~~

4.2 Modeling Guidelines and Input References

The ACM ~~Compliance Documentation~~User's Manual and Help System ~~must~~shall contain a chapter or section on how to model buildings for compliance and how to prepare a building input file for a compliance run. ~~Topics shall~~The following are examples of topics to ~~-~~include:

- What surfaces to model (exterior, interior floors, etc.);
- How to enter data about these surfaces;
- How to model exterior shading (fins, overhangs, etc.);
- Appropriate zoning for compliance modeling;
- Selection of correct occupancy types;
- How to model ~~like~~ similar systems;
- How to model buildings or portions of a building with no heating or cooling;
- Requirements for written justification and additional documentation on the plans and in the specifications for exceptional items~~ on the PERF-1 Exceptional Conditions Checklist~~;
- ~~Correct use of the standard design modifiers including tailored lighting allotment, and display perimeter if the ACM results are modified by these user inputs;~~
- Program modeling limitations; and
- The *Nonresidential Manual* as required reading.

All program capabilities should be described in sufficient detail to eliminate possible confusion as to their appropriate use. While references to the ACM's regular users manual are acceptable, a complete listing of all inputs and/or commands necessary for compliance should be included in the ACM ~~Compliance Documentation~~User's Manual and Help System. ~~The following compliance issues should be explained in the ACM Compliance Documentation or user's manual of each ACM.~~

4.3 Required Modeling Capabilities

4.3.1 General Requirements~~Required Compliance Capabilities~~

4.3.1.1 Format

~~*Description:*~~

The ACM ~~Compliance Documentation~~User's Manual and Help System ~~must~~shall be written in a clear and concise manner. The suggested format is:

- An introduction or overview explaining the use of the ACM for compliance with the ~~Energy Efficiency~~ Standards~~ for Nonresidential Buildings~~.
- A chapter or section which covers every input that can be used for compliance analysis.
- A chapter or section which covers each standard output ~~form or relevant~~ report.

- Appendices, as needed, to provide any additional background information~~, or additional examples of compliance submittals.~~
- (that) are not crucial in explaining the basic functioning of the program for compliance. For example:
  - An appendix may contain variations of compliance forms as described above.
  - An appendix may include a series of construction assembly (ENV-3) forms to aid the ACM user.
  - An appendix may reprint important sections of the *Nonresidential Manual* or this manual that are crucial to modeling buildings correctly for compliance with the ACM.

Although the organizational format is not fixed, all information contained in the ACM ~~Compliance Documentation~~User's Manual and Help System ~~must~~shall be easy to find through use of a ~~detailed~~ table of contents~~ and/or~~, an Index, or through a context sensitive help system.

4.3.1.2 Modeling Guidelines

~~*Description:*~~

The ACM ~~Compliance Documentation~~User's Manual and Help System ~~must~~shall contain clear and detailed information on how to ~~u~~use the ACM to model buildings for compliance with the Standards. ~~At a minimum, the ACM Compliance Documentation must provide explanations and instructions outlined in Section 3.2.~~

~~Each ACM Compliance Documentation or User's Manual must i~~Include ~~a general listing of~~ the following:

1. Description of the value or values associated with each of input.
2. Restrictions on each variable.
3. Listing of the range beyond which inputs are unreasonable for any variable.
4. Description of options for any user-defined variable.

4.3.1.3 Statement

~~*Description:*~~

The following statement ~~must~~shall appear, in a box, within the first several pages of the ACM ~~Compliance Documentation~~User's Manual and Help System:

> [Insert Name of Alternative Calculation Method~~ Name~~] may be used to show compliance with California's Energy Efficiency Standards for Nonresidential Buildings only when the following reference documents are readily available to the program user:
>
> 1. ~~2001~~ 2005 Building Energy Efficiency Standards (P400-03-001F~~P400-00-031~~)
> 2. Nonresidential Manual (P400-03-004F~~P400-98-005~~) ~~and its 2001 Supplement~~
>
> Both publications are available from www.energy.ca.gov org:~~:~~
>
> California Energy Commission
> Publications Office
> 1516 Ninth Street, MS-13
> P.O. Box 944295
> Sacramento, CA 94244-2950
> (916) 654-5200

4.3.1.4 Copies of ACM ~~Compliance Documentation~~User's Manual and Help System

~~*Description:*~~

ACM vendors ~~are required to~~ shall make a copy of the ACM ~~Compliance Documentation~~User's Manual and Help System available to any California building department that requests it.

4.3.1.5 Commission Approval

~~Description:~~

~~A section of the ACM Compliance Documentation must i~~Include a copy of the official Commission notice of the approval of the ACM. The notice may include restrictions or limitations on the use of the ACM. It will also include the date of approval, and may include an expiration date for approval as well. The notice will indicate optional capabilities for which the ACM is approved and other restrictions on its use for compliance. The Commission will provide this notice upon completion of evaluation of the ACM application.

4.3.2 Occupancies and Spaces

4.3.2.1 Conditioned Floor Area and Volume~~s~~

~~Description:~~

~~The ACM Compliance Documentation must d~~Describe how the user determines and enters the conditioned floor area for each occupancy area and for the building as a whole.

- The conditioned floor area of all conditioned space (i.e., all directly or indirectly conditioned space) shall be included in the performance analysis. For a definition of conditioned space, see Section 101(b) of the Standards.
- All directly or indirectly conditioned volume shall be included in the analysis.
- ~~The ACM Compliance Documentation must s~~State that the conditioned floor area for spaces within the building DO NOT include the area under permanent floor-to-ceiling height partitions, ~~but~~ but that the conditioned floor area for the whole building includes the area under these partitions. This conforms with the Standards which define Conditioned Floor Area as the floor area (in square feet) of enclosed conditioned space on all floors of a building, as measured at the floor level of the exterior surfaces of exterior walls enclosing conditioned space.
- Note the following special cases:
  - ~~But f~~For internal and enclosed spaces lighting power allotments for the Area Category Method are determined from floor areas:
  - Where areas are bounded or separated by interior partitions, the floor space occupied by those interior partitions shall not be included in any area.

4.3.2.2 Enclosed Unconditioned ~~and Semi-Conditioned~~ Spaces

~~Description:~~

~~The ACM Compliance Documentation shall d~~Describe unconditioned ~~and semi-conditioned~~ spaces and that they are modeled using the same rules.

~~The ACM Compliance Documentation shall also e~~Explain that enclosed conditioned and ~~semi-~~unconditioned spaces ~~must~~shall be modeled if they are included in the permitted space and that modeling them is optional if they are not part of the permitted space.

If enclosed conditioned or ~~semi-~~unconditioned spaces are not modeled, the demising partition separating the conditioned space from the enclosed unconditioned ~~or semi-conditioned~~ space is modeled as an adiabatic partition (see Section ~~2.2.2.5~~2.3.4.1).

4.3.2.3 Indirectly Conditioned Spaces

~~Description:~~

~~The ACM Compliance Documentation shall e~~Explain that ACMs explicitly simulate all indirectly conditioned spaces, and that users may choose to simulate indirectly conditioned spaces as part of the directly conditioned

space provi ded that the total volume and area of indirectly conditioned spaces included are each less than 15% of the total volume and area of the total indirectly and directly conditioned volume and area.

For the purpose of this manual, indirectly conditioned spaces are those that either can be occupied or cannot be unoccupied.

The requirements for each of these three cases are documented below.

Indirectly Conditioned Spaces Included in Directly Conditioned Space	~~The ACM Compliance Documentation shall d~~Describe how the user enters this space. The space ~~must~~shall use the same configuration and occupancy characteristics as occurs in the construction documents, including envelope performance, occupancy characteristics and lighting levels.
Indirectly Conditioned Spaces that can be occupied and Explicitly Modeled	The ACM ~~Compliance Documentation~~User's Manual and Help System ~~must~~shall describe how the user ~~must~~shall explicitly identify indirectly conditioned space which can be occupied.
Indirectly Conditioned Spaces that cannot be occupied and Explicitly Modeled	The ACM ~~Compliance Documentation~~User's Manual and Help System ~~must~~shall describe how the user ~~must~~shall explicitly identify indirectly conditioned space which cannot be occupied. The ACM ~~Compliance Documentation~~User's Manual and Help System ~~must~~shall instruct the user to specify the amount of light heat to be rejected to this space.

4.3.2.4 Light Mass

~~*Description:*~~

~~The ACM Compliance Documentation shall d~~Describe how users enter parameters to approximate the mass effects of all interior partitions and furniture. When the ACM allows the user to enter information on lightweight mass,

~~the ACM Compliance Documentation shall d~~Describe how to determine appropriate entries and restrictions on user entries for the spaces described below:

- *Directly Conditioned and Indirectly Conditioned Space Which Can be Occupied*: The reference method models lightweight mass through the use of "heavy" furniture weighing 80 pounds per square foot of floor area. In this method, there is an 85% chance that sunlight will fall upon furniture as opposed to the floor.
- *Indirectly Conditioned Spaces Which Cannot be Occupied*: For these spaces the reference method models lightweight mass by using a light furniture category of 30 pounds per square foot in DOE 2.1 to generate the lightweight standard weighting factors for these spaces.

4.3.2.5 Occupancy Types

~~*Description:*~~

~~The Alternative Calculation Method (ACM) Compliance Documentation shall~~D~~ d~~escribe the use of ~~the following~~ each occupancy type~~s~~ in Table N2-2 for spaces or buildings when lighting plans are submitted for the entire building or when lighting compliance is not performed.~~:~~

~~Commercial and Industrial Work~~

~~Grocery Store~~

~~Industrial and Commercial Storage~~

~~Medical/Clinical~~

~~Office~~

~~Other~~

~~Religious Worship, Auditorium, Convention Center~~

~~Restaurant~~

~~Retail and Wholesale Store~~

~~School~~

~~Theater~~

~~Unknown~~

~~The ACM area occupancy selection list and Alternative Calculation Method (ACM) Compliance Documentation descriptions must i~~Include ~~these~~ each area occupancy type~~s~~ from Table N2-3 for spaces when lighting plans are submitted for portions or for the entire building or when lighting compliance is not performed.~~:~~

~~Auditorium~~

~~Auto Repair Workshop~~

~~Bank/Financial Institution~~

~~Bar, Cocktail Lounge and Casino~~

~~Beauty Shop~~

~~Barber Shop~~

~~Classroom~~

~~Commercial/Industrial Storage~~

~~Commercial/Industrial Work - General, High Bay~~

~~Commercial/Industrial Work - General, Low Bay~~

~~Commercial/Industrial Work - Precision~~

~~Convention, Conference and Meeting Center~~

~~Corridor, Restroom and Support Area~~

~~Courtrooms~~

~~Dining Area~~

~~Dry Cleaning (Coin Operated)~~

~~Dry Cleaning (Full Service Commercial)~~

~~Electrical, Mechanical Rooms~~

~~Exercising Rooms and Gymnasium~~

~~Exhibit Display Area and Museum~~

~~Grocery Sales Area~~

~~High-Rise Residential~~

~~Hotel Function Area~~

~~Hotel/Motel Guest Room~~

~~Kitchen and Food Preparation~~

~~Laundry~~

~~Library - Reading Area~~

~~Library - Stacks~~

~~Lobby - Hotel~~

~~Lobby - Main Entry~~

~~Lobby - Office Reception/Waiting~~

~~Locker/Dressing Room~~

~~Lounge/Recreation~~

~~Mall, Arcade and Atrium~~

~~Medical and Clinical Care~~

~~Mixed Occupancy~~

~~Office~~

~~Other~~

~~Religious Worship~~

~~Retail Sales, Wholesale Showroom~~

~~Smoking Lounge~~

~~Theater (Motion Picture)~~

~~Theater (Performance)~~

~~Unknown~~

~~The ACM Compliance Documentation must r~~Require users to enter the occupancy(s) of each conditioned area or space being modeled. The user should select the occupancy that most closely matches the occupancy specified in Table N2-~~1~~ 2 or Table N2-~~2~~3. The user's occupancy selection should be based on the actual occupancy of the space(s) not on the amount of lighting or other energy use aspects desired. ~~The ACM Compliance Documentation should g~~

Guide the user on how to determine an occupancy based on occupancy use similarities and limit occupancy lighting information and other occupancy assumptions to references to this Manual or an appendix. By virtue of the categories "all other" and "~~unknown~~tenant lease space" the occupancy tables are complete and address all possible occupancies. The local enforcement agency (not the ACM user/permit applicant) has the discretion to determine if the user's occupancy choices are reasonable and correct.

If the ACM has an independent occupancy selection for ventilation, ~~the ACM Compliance Documentation must d~~describe how best to select a ventilation occupancy and may describe ventilation assumptions.

Note. The ACM ~~Compliance Documentation~~User's Manual and Help System is not the forum to argue the validity of area occupancy assumptions, nor should the ACM or the ACM ~~Compliance Documentation~~User's Manual and Help System be written so that either encourages debates about area occupancy assumptions or debates about choosing occupancies based on these assumptions. The Commission strongly encourages vendors to reference these assumptions by referring to Chapter 2 of this manual, but these assumptions may also be provided in an appendix to the ACM ~~Compliance Documentation~~User's Manual and Help System.

4.3.2.6 Mixed Occupancies

~~*Description:*~~

~~The ACM Compliance Documentation shall e~~Explain how the user may select mixed as the occupancy type when selecting an area occupancy. Area occupancy types may only be mixed when they are all within the same zone, have the same operating schedules and when none of the occupancies includes process loads.

~~The ACM Compliance Documentation shall d~~Describe how the user, if mixed is selected as the area occupancy type, enters the ~~following:~~

~~1. T~~total area of the zone and the a~~,~~

~~2. A~~rea and square footage of up to four different area occupancy types. Describe how the ACM automatically calculates the sum of the areas for the four different occupancies:

- If the sum of the four different areas is greater than the input total area of the zone, the ACM will abort or ask for corrected input.
- If the sum of the four different occupancies is less than the input total area of the zone, the ACM will assign the occupancy "all other" to the additional area needed to equal the input total area.

Note that the areas specified do not include the area of interior partitions for the purposes of determining lighting wattages in accordance with the standards. ~~The reference method assumes for mixed (occupancies)that 1% of the floor area is occupied by interior partitions. The ACM Compliance Documentation shall d~~

~~escribe how the ACM automatically calculates the sum of the areas for the four different occupancies:~~

- ~~If the sum of the four different areas is greater than the input total area of the zone, the ACM will abort or ask for corrected input.~~
- ~~If the sum of the four different occupancies is less than the input total area of the zone, the ACM will assign the occupancy other to the additional area needed to equal the input total area.~~

~~The ACM Compliance Documentation shall e~~Explain that the ACM will assign default assumptions for occupant densities, outside air ventilation rates, lighting loads, receptacle loads and service water heating loads by calculating the area weighted average for each of these inputs, using the areas input by the user.

Refer the user to sections for lighting, ventilation loads and process loads for respective requirements for each of these adjustments.

4.3.2.7 Occupant Loads

~~*Description:*~~

~~The ACM Compliance Documentation shall e~~Explain that these values are automatically selected by the ACM based on the occupancy.

4.3.2.8 Receptacle Loads

~~*Description:*~~

~~The ACM Compliance Documentation shall e~~Explain that these values are automatically selected by the ACM based on the occupancy type and that the receptacle loads include the process energy produced by equipment that are plugged into receptacle outlets such as personal computers and printers.

4.3.2.9 Process Energy

~~*Description:*~~

~~The ACM Compliance Documentation shall e~~Explain that the process energy is limited to the energy produced by equipment whose locations are specified on the plans or other construction documents. The ~~compliance documentation~~User's Manual and Help System shall clearly explain that the energy generated by plugged-in devices such as office equipment ~~must~~shall not be modeled as process energy. The thermal energy from such devices are included in the plug loads shown in Table N2-~~1~~ 2 or N2-~~2~~3.

4.3.2.10 Ventilation

~~*Description:*~~

~~The ACM compliance documentation shall e~~Explain that the ventilation level is based on the selected occupancy(s) and cannot be altered by the user. The ~~compliance documentation~~User's Manual and Help System shall explain that process ventilation may be input by the user for compliance simulations.

~~The compliance documentation must i~~Inform the user that they ~~must~~shall justify the need for nonzero tailored ventilation values to the satisfaction of the local enforcement agency.

~~4.3.2~~4.3.3 Walls, Roofs and Floors~~Required Loads Capabilities~~

4.3.3.1 Exterior Opaque Surfaces

~~*Description:*~~

~~The ACM Compliance Documentation must i~~Include the following information.

- Every exterior partition of the proposed building shall be modeled.
- The Standards define an exterior partition as: an opaque, translucent, or transparent solid barrier that separates conditioned space from ambient air or space that is not enclosed.
- Every slab-on-grade and underground walls and floors of the proposed building shall be modeled.
- Partitions separating the conditioned space from the courtyard are exterior partitions and shall be modeled as such by the ACM.
- Demising partitions are defined in the Standards as: solid barriers that separate conditioned space from enclosed unconditioned space.

~~1. The conditioned floor area of all conditioned space (i.e., all directly or indirectly conditioned space) must be included in the performance analysis. For a definition of conditioned space, see Section 101(b) of the Standards.~~

~~2. All directly or indirectly conditioned volume must be included in the analysis.~~

~~3. Every exterior partition of the proposed building must be modeled.~~

~~• The Standards define an exterior partition as: an opaque, translucent, or transparent solid barrier that separates conditioned space from ambient air or space that is not enclosed.~~

~~• 4. Every slab-on-grade and underground walls and floors of the proposed building must be modeled.~~

~~• 5. Partitions separating the conditioned space from the courtyard are exterior partitions and must be modeled as such by the ACM.~~

~~6. Demising partitions are defined in the Standards as: solid barriers that separate conditioned space from enclosed unconditioned space.~~

Demising partitions may not be modeled as exterior partitions. They are modeled as interior walls constructed according to the plans and specifications for the building. If the enclosed unconditioned space is not included in the permit, the demising partition ~~must~~shall be modeled as an adiabatic partition for both the standard and the proposed buildings.

4.3.3.2 Interior Surfaces

~~*Description:*~~

The ACM ~~Compliance Documentation~~User's Manual and Help System ~~must~~shall include the following information.

- All interior floors shall be modeled.
- Atria are considered indirectly conditioned spaces and partitions separating the conditioned space from atria are interior surfaces.
- All interzone and interior walls shall be modeled as air walls with no heat capacity and U-factor of 1 Btu/h-ft^2-ºF. The ACM automatically accounts for the heat capacity of all interzone and interior walls by modeling them as light mass.

~~1. All interior floors must be modeled.~~

~~2. Atria are considered indirectly conditioned spaces and partitions separating the conditioned space from atria are interior surfaces.~~

~~3. All interzone and interior walls must be modeled as air walls with no heat capacity and U-factor of 1 Btu/h-ft^2-°F. The ACM automatically accounts for the heat capacity of all interzone and interior walls by modeling them as light mass.~~

4.3.3.3 ~~4.3.2.4 Materials~~Construction Assemblies

~~Description:~~

~~The ACM Compliance Documentation must e~~Explain how the user can select construction assemblies from ACM Joint Appendix IV, which will account for ~~simulate different materials as required to make-up different assemblies including~~ thickness (f~~eet~~), density (lb/ft³~~pounds per cubic foot~~), specific heat (~~Btu~~Btu/ºF-lb ~~per pound per degree F~~) and thermal conductivity (Btu-ft/h-ºF ~~per hour per square foot per degree F~~).

~~4.3.2.4~~4.3.2.5 ~~Construction Assemblies~~

~~Description:~~

~~The ACM Compliance Documentation must explain that the user must determine the U-factors of assemblies -- wood frame, steel frame, masonry, and composite -- and that they must be calculated according to the methods described in Chapter 2.~~

Note that the U-factor requirements for exterior partitions in the Standards include the fixed outside air film assumed in the Nonresidential Manual, but the reference method and other energy analysis computer programs extract this fixed outside air film value and recalculate the outside air film resistance on an hourly basis as a function of wind speed.

4.3.3.4 Absorptance and Emittance

~~Description:~~

~~The ACM Compliance Documentation must d~~Describe how the user enters the value for the absorptance and emittance for roofs (default shall be used for other surfaces), and describe the relationship between absorptance and reflectance (absorptance = 1 – (reflectance)).

~~ACM Compliance Documentation must e~~Explain that the ACM user can specify ~~opaque exterior wall or roof/ceiling construction~~ surfaces between 0.90 and 0.20 absorptance and between 0.95 and 0.20 emittance, and that the program will warn and print an exceptional condition on the ~~PERF-1~~ Certificate of Compliance whenever the absorptance is less than 0.50 ~~for an opaque exterior partition~~. ~~The ACM Compliance Documentation must e~~

Explain ~~what~~ the default for when ~~happens if~~ the user does not specify an absorptance. ~~The ACM Compliance documentation must explain to the user how to enter the values for cool roofs and must describe the rating methods and installation criteria that are required for cool roofs.~~

4.3.3.5 Surface Orientation and Tilt

~~Description:~~

~~The ACM Compliance Documentation must d~~Describe how the user enters the surface orientation (azimuth) and tilt of each exterior partition.

~~4.3.2.7~~4.3.2.8 ~~Heat Capacity~~

~~Description:~~

~~The ACM Compliance Documentation must describe to the user how to specify and account for the heat capacity of opaque exterior walls.~~

~~The ACM Compliance Documentation must describe to the user how to:~~

~~a) Distinguish between an *exterior wall* as defined in the standards and other wall types (e.g., demising wall); and~~

~~b) Distinguish between *wood frame*, *steel frame* and *other* wall assemblies.~~

4.3.3.6 Exterior Doors

~~*Description:*~~

~~The ACM Compliance Documentation must e~~Explain how the user selects door constructions from ACM Joint Appendix IV and enters the ~~construction, materials,~~ orientation, tilt, locations, and areas for exterior doors.

~~The ACM Compliance Documentation must request the user to specify and account for the heat capacity of all exterior doors in the proposed design. The ACM Compliance Documentation must e~~Explain that exterior doors may be grouped together as one area if they have the same (within the tolerance allowed for ACMs) orientation, tilt, construction and materials.

4.3.3.7 Exterior Walls

~~*Description:*~~

~~The ACM Compliance Documentation must d~~Describe how the user selects wall constructions from ACM Joint Appendix IV, which account for ~~enters area, and~~ U-factor and heat capacity ~~of exterior walls~~.

~~The ACM Compliance Documentation~~ It ~~must~~shall describe how to enter the information to determine the Exterior Wall Area as:

Equation N4-1_____Gross Exterior Wall Area - (Vertical Fenestration Area + Door Area)

where the Vertical Fenestration Area is equal to or less than the value explained below.

~~The ACM Compliance Documentation must request the user to specify and account for the heat capacity of opaque exterior walls in the proposed design, and how to specify and account for the U-factor of walls. The U-factor of walls may be weight averaged over the area of walls only when the walls are in the same occupancy and system area and have the same azimuth, the walls have the heat capacities within 10% of each other, and the walls are of the same construction type as described in Table 1-H and 1-I of the Standards.~~

4.3.3.8 Underground Walls

~~*Description:*~~

~~The ACM Compliance Documentation must d~~Describe the parameters that users ~~must~~shall enter to model underground walls.

~~The ACM Compliance Documentation must r~~Require users to separately identify exterior walls separating conditioned space from adjacent earth, and request users to separately select underground wall constructions from ACM Joint Appendix IV. ~~provide sufficient construction/assembly information to simulate walls accurately.~~

4.3.3.9 Exterior Roofs/Ceilings

~~*Description:*~~

~~The ACM Compliance Documentation must d~~Describe how the user enters area, tilt and orientation of roof/ceiling constructions and selects a construction assembly from ACM Joint Appendix IV.

~~and heat capacity of exterior roofs/ceilings and must describe the standard roof/ceiling.~~

~~The ACM Compliance Documentation must explain how the user enters roof/ceiling construction/assembly information to simulate roofs/ceilings accurately.~~

~~The ACM Compliance Documentation must d~~Describe how the user enters the information to determine the Exterior Roof/Ceiling Area as:

Equation N4-2 Gross Roof/Ceiling Area - Skylight Area

~~The ACM Compliance Documentation shall d~~Describe how to enter each exterior roof assembly, including construction, orientation and tilt, location and area for all roofs as they occur in the construction documents. Exterior roofs that have the same ~~heat~~ construction assembly from ACM Joint Appendix IV ~~transfer characteristics, mass characteristic~~ and that are in the same occupancy and system areas and are exposed to the same outside conditions may be combined for the purposes of entering the area of the roof assembly. ~~In addition, the ACM Compliance Documentation must describe to the user the acceptable methods of calculating an overall U-factor of the assembly, as described in Section 141(c) of the energy efficiency standards.~~

4.3.3.10 Exterior Raised Floors

~~*Description:*~~

~~The ACM Compliance Documentation must d~~Describe how the user enters area~~,~~ and selects construction assemblies from ACM Joint Appendix IV.

E~~heat capacity of exterior raised floors and must describe the standard raised floor.~~

~~The ACM Compliance Documentation must~~ explain how the user enters raised floor construction/assembly information to simulate raised floors accurately.

~~The ACM Compliance Documentation shall provide the user with the following information:~~

- ~~The standard design raised floor assemblies are dependent on the HC of the proposed exterior raised floor. The standard design raised floor assemblies are determined as follows:~~
- ~~HC < 7.0: The standard assembly is a wood framed, lightweight raised floor with a U-factor matching the requirement listed in Table 1-H or 1-I of the Standards for wood framed walls and the applicable climate zone.~~
- ~~If HC ≥ 7.0: The standard assembly is two layers:~~
  1. ~~Carpet and pad, R-value = 2.03;~~
  2. ~~100 lb./cubic foot concrete slab with a thickness such that the total heat capacity of the standard assembly matches the heat capacity of the proposed floor assembly and the overall U-factor including carpet and pad matches the applicable value listed in Table 143-A, 143-B, or 143-C of the standards for the applicable climate zone.~~

4.3.3.11 Concrete Slab Floors on Grade

~~*Description:*~~

~~The ACM Compliance Documentation must d~~Describe how the user selects slab constructions from ACM Joint Appendix IV.

~~enters area and heat capacity of concrete slab on grade floors.~~

~~The ACM Compliance Documentation must explain how the user enters slab floor construction/assembly information to simulate slab-on-grade floors accurately.~~

~~The ACM Compliance Documentation~~ P~~shall p~~rovide the user with the information on how to enter slab constructions and areas as they occur in the construction documents.

4.3.3.12 Underground Walls and Floors

~~*Description:*~~

~~The ACM Compliance Documentation must d~~Describe the parameters that users ~~must~~shall enter to model underground walls and floors.

~~The ACM Compliance Documentation must r~~Require users to separately identify floors separating conditioned space from adjacent earth, and request users to select separate constructions from ACM Joint Appendix IV.

~~provide sufficient construction/assembly information to accurately simulate the heat transfer and heat capacity of the floors.~~

~~The ACM Compliance Documentation shall r~~Require the user to enter underground floor constructions and areas as they occur in the construction documents.

4.3.4 Fenestration

4.3.4.1 Fenestration Products

~~*Description:*~~

~~The ACM Compliance Documentation must d~~Describe how the user enters information about the characteristics of fenestration products in both walls and roof/ceilings that affect the energy use of the building. The features that ~~must~~shall be explained in the ACM ~~Compliance Documentation~~User's Manual and Help System are described in the following sections.

Describe the differences between the fenestration product categories: manufactured fenestration products, site-built fenestration products, and field-fabricated fenestration.

4.3.4.2 Fenestration Orientation and Tilt

~~*Description:*~~

~~The ACM Compliance Documentation must d~~Describe how the user enters the actual azimuth (direction) and surface tilt of glazing surfaces in each surface. The user shall be instructed that the azimuth and surface tilt of each glazing surface shall be entered as it occurs in the construction documents rounded off to the nearest whole degree.

4.3.4.3 Fenestration Thermal Properties

~~*Description:*~~

~~The ACM Compliance Documentation must d~~Describe that, for each ~~manufactured~~ fenestration product, the user ~~must~~shall input the fenestration's overall U-factor and SHGC.

~~from the NFRC label. The ACM Compliance Documentation must also d~~Describe the allowed sources for the U-factor and SHGC, the fenestration labeling alternatives and the limitations on the use of the alternate default values as covered in Section 116 of the Standards and Section 10-111 of the Administrative Standards.

~~that, for each site-assembled or field-fabricated fenestration product, there are three alternatives for modeling the thermal properties; (1) the user uses the U-factor determined using the NFRC certification for Site-Built Products and the SHGC calculated as shown in Appendix I, (2) the user inputs the default U-factor from Table 1-D and the Solar Heat Gain Coefficient from Table 1-E in the standards; (3) the user determines the U-factor from Appendix I and calculates the SHGC of the fenestration assembly as shown in Appendix I or by using a method approved by the Commission. The ACM Compliance Documentation must also d~~Describe that default values are used when no entries are made.

~~The ACM Compliance Documentation shall e~~Explain that the basis of the standards is the appropriate maximum U-factor and the Relative Solar Heat Gain or the Solar Heat Gain Coefficient from Tables ~~1-H~~143-A and 143-B~~1-I~~ of the Standards according to occupancy and climate zone.

4.3.4.4 Glazing in Exterior Walls and Shading

~~*Description:*~~

~~The ACM Compliance Documentation must d~~Describe how to model heat transfer through all glazed (transparent or translucent) surfaces of the building envelope walls. The user ~~must~~shall account for many

features of exterior glazing in walls. These features, including all standard and proposed modeling assumptions and inputs, are described in the following sections.

4.3.4.5 Area of Fenestration in Walls and Doors

~~*Description:*~~

~~The ACM Compliance Documentation shall e~~Explain how the user ~~must~~shall model the exposed surface area of each transparent or translucent surface. Fenestration surfaces include openings in the walls and vertical doors of the building.

~~The ACM Compliance Documentation shall d~~Describe how to enter the following:

- *Fenestration Area in Walls and Doors*. For each glazing surface, the user ~~must~~shall enter the area of glazing surface associated with a zone. This area is the rough-out opening for the window(s). The areas of fenestration in walls and doors shall only be grouped when they have the same U-factor, orientation, tilt, shading coefficient, relative solar heat gain and relationship to shading from exterior devices such as overhangs or side fins. Fenestration in demising walls may not be grouped with fenestration in exterior walls or doors.

  The area of field-fabricated fenestration is limited to 1,000 ft^2 when a building has more than 10,000 ft^2 of total fenestration area; any building that exceeds this limit will not meet compliance.

- *Display Perimeter*. When the ACM calculates the standard glazing/fenestration area based on the display perimeter, the ACM ~~Compliance Documentation~~User's Manual and Help System ~~must~~shall describe how the user enters parameters for display perimeter. The user ~~must~~shall specify a value, in feet, for each zone on each floor or story of the building that abuts a public sidewalk. The value is used as an alternate means of establishing Maximum Fenestration Area in the standard design (Title 24, § 143). As defined in Section 101(b) of the Standards, display perimeter is the length of an exterior wall in a ~~B-2~~Group B; Group F, Division 1; or Group M occupancy that immediately abuts a public sidewalk, measured at the sidewalk level for each story that abuts a public sidewalk.

- *Floor Number*. The ACM ~~Compliance Documentation~~User's Manual and Help System ~~must~~shall describe how to determine each floor (story) of a building and how to determine if there is a Display Perimeter associated with each floor (story) of the building, and that a public sidewalk ~~must~~shall be surfaced with a material considered acceptable for sidewalks by the local codes, ~~must~~shall be readily accessible to the public view. ~~The ACM Compliance Documentation shall e~~Explain that the display perimeter is intended for applications where retail merchandise needs to be viewed by the passing public.

~~The ACM Compliance Documentation must e~~Explain that the *Maximum Fenestration Area* is 40% of the gross exterior wall area of the entire permitted space or building that can be occupied, or, if Display Perimeter is specified, the *Maximum Fenestration Area* is either 40% of the gross exterior wall area of the entire permitted space or building, or six feet times the Display Perimeter for the entire permitted space or building, whichever value is greater.

Explain that the *Maximum West-Facing Fenestration Area* is 40% of the gross exterior west-facing wall area of the entire permitted space or building that can be occupied, or, if Display Perimeter is specified, the *Maximum West-Facing Fenestration Area* is either 40% of the gross exterior west-facing wall area of the entire permitted space or building, or six feet times the west facing display perimeter for the entire permitted space or building, whichever value is greater.

~~The ACM Compliance Documentation shall describe how to determine the gross exterior wall area.~~

4.3.4.6 Solar Heat Gain Coefficients of Fenestration in Walls and Doors

~~*Description:*~~

~~The ACM Compliance Documentation shall e~~Explain how to determine solar heat gain coefficients and relative solar heat gains for fenestration in walls and doors, as defined in the Standards, and ~~shall~~ (explain) how and when each is used in modeling the characteristics of buildings. ~~The ACM Compliance Documentation shall d~~

Describe how and when the user enters solar heat gain coefficient from the Commission default Table or an NFRC label. This solar heat gain coefficient (SHGC) shall apply to the full fenestration area. Fenestration solar heat gain coefficient for each glazing surface shall be entered as it occurs in the construction documents for the building.

~~The ACM Compliance Documentation shall e~~Explain to the user that the basis of the standards are the appropriate maximum RSHG values from Tables ~~1-H~~143-A and 143-B~~1-I~~ of the Standards according to occupancy type, climate zone and orientation. ~~The ACM Compliance Documentation must n~~Note that the maximum RSHG is different for north oriented glass; and that, for the purposes of establishing standard design RSHG, north glass is glass in exterior walls and doors facing from 45° west (not inclusive) to 45° east (inclusive) of true north.

For nonresidential buildings, high-rise residential buildings and hotels and motels, approved methods for accounting for the shading effects of site assembled, and field-fabricated fenestration assemblies are the information reported on an approved NFRC label, CEC's default table (Table ~~1-E~~116-B of the ~~s~~Standards), and the value calculated in ACM Appendix NI or other Commission approved methods. This shading information which includes the effects of glass, framing and mullions applies to the entire window area. Effects such as the buildup of dirt on windows are not considered differential effects between the proposed and standard design which result in energy savings. These effects are intentionally neglected by the reference method and ~~must~~shall be considered the same in proposed and standard designs for ACMs.

4.3.4.7 Overhangs

~~*Description:*~~

~~The ACM Compliance Documentation must d~~Describe how users model overhangs over windows, including ~~. The ACM Compliance Documentation must describe how the user enters~~ the following:

- *Overhang projection*~~.—~~. The distance the overhang projects horizontally from the plane of the window.
- *Height above window*~~.—~~. The distance from the top of the window to the overhang.
- *Window height*~~.—~~. The height of the top of the window from the bottom of the window, to which the overhang is applied.
- *Overhang Extension*~~.—~~. The distance the overhang extends past the edge of the window jams.

~~The ACM Compliance Documentation shall i~~Instruct the user to simulate overhangs in the proposed design for each window as they are shown in the construction documents. Overhangs may not be grouped unless they are applied to windows facing the same direction with the same window height and the overhang has the same overhang projection, height above window, and the overhang is continuous from one window in the group to another.

4.3.4.8 Vertical Shading Fins

~~*Description:*~~

~~The ACM Compliance Documentation shall d~~Describe how vertical shading fins are modeled~~, and will d~~.

Describe the constraints on the use of vertical shading fins, i.e. the ~~. These~~ fins ~~must~~shall be attached to the building. Objects that are separate from the building, such as adjacent buildings, may not be modeled as vertical fins.

4.3.4.9 Exterior Fenestration Shading Devices

~~*Description:*~~

~~The ACM Compliance Documentation shall d~~Describe how the user enters parameters describing exterior fenestration shading devices.

~~The ACM Compliance Documentation shall d~~Describe any restrictions on the parameters, i.e. the ~~. These~~ devices ~~must~~shall be attached to the building that the user is modeling for compliance.

4.3.4.10 Window Management

~~Description:~~

~~The ACM Compliance Documentation must d~~Describe how the ACM models window management and emphasize that this management is an assumption required for all ACMs, not a user option. The assumptions regarding window management include the effects of well-operated interior draperies. ~~The ACM Compliance Documentation shall i~~

Include the description of the proposed design assumptions that include interior drapes with a solar heat gain coefficient multiplier of 0.80.

4.3.4.11 Glazing or Fenestration in Exterior Roofs (Skylights)

~~Description:~~

~~The ACM Compliance Documentation must e~~Explain how to model heat transfer through all glazing or fenestration (transparent and translucent) in exterior roofs of the building envelope. The user ~~must~~shall account for many features of such glazing. These features, including all standard and proposed modeling assumptions and inputs, are described in the following sections.

4.3.4.12 Fenestration Areas of Glazing in Exterior Roofs (Skylights)

~~Description:~~

~~The ACM Compliance Documentation shall d~~Describe how the user ~~must~~shall model the exposed surface area of each transparent or translucent surface, and ~~must~~shall describe how the user ~~must~~shall enter the proposed design fenestration areas as they are shown in the construction documents. Fenestration surfaces in roofs include openings in roofs and horizontal roof doors of the building.

~~The ACM Compliance Documentation must e~~Explain how the ACM determines the effects of these fenestration areas, including~~e~~ describing that:

1. When the Skylight Roof Ratio (SRR) in the proposed design is ≤ 0.05, the standard design shall use the same fenestration area as on each proposed design exterior roof.

   EXCEPTION: When skylights are required by Section 143(c) (low-rise conditioned or unconditioned enclosed spaces that are greater than 25,000 ft^2 directly under a roof with ceiling heights greater than 15 ft and have a lighting power density for general lighting equal to or greater than 0.5 W/ft^2) and the SRR in the proposed design is less than the minimum, the standard design shall have a SRR of 3.0%~~0.03~~ for 0.5 W/ft^2 ≤ LPD < 1.0 W/ft^2, 3.3% for 1.0 W/ft^2 < LPD < 1.4 W/ft^2, and 3.6%~~0.036~~ for LPD = 1.4~~0~~ W/ft^2 ~~= 0.033 for 1.0 = LPD ≤ 1.4 W/ft^2 =~~ in one half of the area of qualifying spaces.

2. When the Skylight Roof Ratio in the proposed design is > 0.05, the ACM shall determine the horizontal fenestration area of the standard design by multiplying the fenestration area in each exterior roof by a fraction equal to:

   Equation N4-3 $SRR_{standard}/SRR_{proposed}$.

The U-factor and solar heat gain coefficients of individual skylights may be combined by area-weighted averaging only if they are not being used for daylighting and if they are in the same zone.

4.3.5 Lighting

~~4.3.3.1Description:~~

~~The ACM Compliance Documentation shall d~~Describe how users enter lighting parameters. The documentation shall describe how to enter lighting for each space being modeled.

~~The ACM Compliance Documentation shall r~~Request the user to indicate one of the following conditions for the building:

1. *Lighting Compliance Not Performed*. ~~The ACM Compliance Documentation must r~~Require the user to enter the occupancy type of each space from Table N2-~~1~~ 2 or Table N2-~~2~~ 3 of this manual. The documentation ~~must~~shall explain that Table N2-~~1~~2 may be used even if the building has multiple occupancies.
2. *Lighting Compliance Performed*. ~~The ACM Compliance Documentation must r~~Require the user to indicate whether lighting plans will be submitted for a portion of the building or for the entire building (excluding the residential units of high-rise residential buildings and hotel/motel guest rooms). If lighting plans will be submitted for a portion of the building, the documentation ~~must~~shall require the user to select the occupancy type of each space from Table N2-~~2~~3 of this manual. However, if lighting plans will be submitted for the entire building, the ACM ~~Compliance Documentation~~User's Manual and Help System ~~must~~shall require the user to select the occupancy type of each space from Table N2-~~1~~2 or Table N2-~~2~~3 of this manual. The documentation ~~must~~shall explain that for spaces without specified lighting level, the ACM selects the default lighting level from Table N2-3~~2~~.

~~The ACM Compliance Documentation must e~~Explain that if the modeled Lighting Power Density (LPD) is different than the actual LPD calculated from the fixture schedule for the building, ACMs shall model the larger of the two values for the compliance run and shall print that value for "Installed Lighting" on ~~PERF-1~~the Certificate of Compliance.

~~With a specific set of lighting plans that meets the prescriptive tailored lighting requirements and the submittal of the prescriptive Tailored LPD Summary and Worksheet Forms, LTG-4, for each HVAC zone with a tailored lighting power entry, the user may choose to enter the Total Allowed Watts from Line 4, Part 1 of LTG-4 as a Tailored Lighting Allotment entry for that HVAC zone.~~

~~The ACM Compliance Documentation may also r~~Request the user to enter the Tailored Lighting Allotment and lighting control credits for each zone when they are applicable and the ACM uses those features.

If a value is input for the Tailored Lighting Allotment, the user shall provide lighting plans that comply with the prescriptive requirements and all necessary Tailored Lighting Forms and Worksheets ~~(LTG-4)~~ documenting the lighting and its justification~~ as part of the compliance documentation~~.

Describe how to address lighting controls.

- If a value is input for lighting control credits, the user shall provide documentation that lighting control credits have been used in compliance~~ and provide the lighting Control Credit Watts from Column I for Building Total from LTG-3, Lighting Controls Credit Worksheet~~.
- ACM ~~For the performance compliance approach u~~User~~/applicant~~s may not take credit for lighting controls that would otherwise be required by the Standards, especially by mandatory requirements.
- ~~The ACM Compliance Documentation must spell out this limitation of lighting control credits.~~For lighting controls required by 131(c)2 (either a multi-level automatic daylighting control or an astronomical multi-level time switch control), no credit is permitted for the minimally compliant control (astronomical multi-level time switch control), which is automatically modeled in both the proposed building and the standard building; however, if automatic multi-level daylighting controls are used, the proposed building benefits from an additional lighting power reduction.
- If the ACM allows the user to select from various types of lighting controls, ~~the ACM Compliance Documentation must~~ warn users that the control type selected ~~must~~shall be installed in the entire floor area in the space or zone modeled in the program.

~~4.3.3~~4.3.6 HVAC Systems and Plant ~~Required Capabilities~~

~~The ACM Compliance Documentation must describe the application of the energy source conversion factor and any features of the program for which the user must consider this factor.~~

4.3.6.1 Thermal Zones

~~*Description:*~~

~~The ACM Compliance Documentation must d~~Describe the number of thermal zones (a minimum of fifty) that the ACM is capable of modeling and the minimum control capabilities that ~~must~~shall be included in each of these zones.

~~As described in Chapter 2, I~~if a proposed building design has twenty thermostats or less, ~~the ACM Compliance Documentation must~~ require the user to model the same number of zones as there are independent thermostats. Hence zones may only be combined when there are more than twenty (20) HVAC zones in a proposed building design. The methods of combining thermal zones shall be consistent with the definition ZONE, SPACE CONDITIONING in Section 101(b) of the Standards. ~~This definition states:~~

> ~~ZONE, SPACE CONDITIONING is a space or group of spaces within a building with sufficiently similar comfort conditioning requirements so that comfort conditions, as specified in 144(b)3 or 150(h), as applicable, can be maintained throughout the zone by a single controlling device.~~

~~The ACM Compliance Documentation must e~~Explain the characteristics that will lead to zones being similar, so they may be combined into one zone for modeling purposes, and the characteristics that will lead to the zones being dissimilar. An example of similar zones may be central core areas on multiple floors of a multi-story building when they are served by the same system or systems of the same category. See Section 4.3.~~3~~6.19 for combining like systems. An example of dissimilar zones may be a perimeter area on one facade of a building, part of which includes glazing and part of which has no glazing. The conditions in these two areas are sufficiently dissimilar that the areas should be treated as two zones (if they are independently controlled) even though they are on the same floor and facing the same orientation.

~~The ACM Compliance Documentation should also e~~Emphasize that the distribution of heating and cooling ~~must~~shall be well balanced across any area that is to be considered as one zone.

Explain that z~~Z~~oning the building for compliance calculations ~~must~~shall be consistent with the actual zoning of the building if the actual zoning is known at the time of the analysis. If there are more actual zones than the program is capable of modeling, actual zones may be merged together for compliance purposes, as long as it can be established that the ~~actual~~ grouped zones ~~being grouped together for compliance~~ are thermodynamically similar such that physical comfort could be maintained by a single thermostat or HVAC-controlling device/sensor.

Show that t~~T~~he ultimate test is to use non-coincident load calculations to show that actual zones grouped together for compliance calculations have the same or similar peak heating and cooling load profiles. This is done with a design load calculation which considers the peak load by month and hour.

Explain that ~~Typically,~~ physical zones which have the same or similar glazing orientation(s), the same or similar glazing area to floor area and the same occupancy types will be thermodynamically similar since, for example, they experience their peak cooling loads at the same hour. These zones can be merged together for compliance calculations.

~~The compliance documentation should t~~Tell the ACM user ~~if~~ that the standard design uses exactly the same zoning as in the proposed building design ~~as the reference method does~~.

~~The ACM Compliance Documentation shall also d~~Describe (how to zone a building that) does not include an HVAC system in the design.

- Any building or separate permitted space smaller than 2500 ft^2 in conditioned floor area without an HVAC system or design may be modeled as having only a single HVAC zone.
- For buildings or permitted spaces 2,500 ft^2 and greater, each floor of the building shall be divided into multiple thermal zones according to the following procedure:
  1. Determine the ratio (R) of the floor's total conditioned area to the gross exterior wall area associated with the conditioned space.
  2. For each combination of occupancy type and exterior wall orientation create a perimeter zone. The floor area of each perimeter zone shall be the gross exterior wall area of the zone times R or 1.25, whichever is smaller.

3. Model the exterior space adjacent to each wall orientation as a separate exterior zone. Spaces adjacent to walls which are within 45 degrees of each orientation shall be included in the zone belonging to that orientation.
4. For cases where R is greater than 1.25, create an interior zone for each occupancy type. For each occupancy type, the floor area of the interior zone shall be the total area less the floor area of the perimeter zones created in paragraphs 2 and 3 above.
5. Prorate the roof area and the floor area among the zones according to the floor area of each zone. Prorate the roof and floor areas among the perimeter zones created in paragraphs 2 and 3 above according to the floor area of each exterior zone.
6. Assign skylights to interior zones. If the skylight area is larger than the roof area of the interior zone, then the skylight area in the interior zone ~~must~~shall be equal to the roof area in the interior zone and the user ~~must~~shall prorate the remaining skylight area among the perimeter zones based on the floor area.
7. If the area of the zone is less than 300 ft^2, combine it with its adjacent zone of the same occupancy type and zone type (interior or exterior).
8. Courtyards are considered outside or ambient air. Walls, floors, and roofs separating conditioned spaces from courtyards are exterior walls, floors, and roofs. Create an exterior zone for each wall orientation separating the conditioned space from the courtyard. The user shall not combine these exterior zones with other exterior zones even if their exterior walls have the same orientation.
9. Model spaces adjacent to demising walls as interior zones. Combine these zones with other interior zones within the same occupancy type.
10. Ignore all interior walls and model partitions separating thermal zones as air walls with U-factor of 1.0 Btu/h-ft^2-^oF.

Since the Commission considers a larger number of modeled HVAC zones to be a more accurate representation, the ACM ~~Compliance Documentation~~User's Manual and Help System ~~must~~shall inform ACM users that the local enforcement agency may (at its own discretion) require the applicant to model additional HVAC zones.

4.3.6.2 Primary Systems

~~*Description:*~~

~~The ACM Compliance Documentation must i~~Include a list of the primary systems that the ACM can model.

~~The ACM Compliance Documentation shall e~~Explain each required input parameter that is needed to describe each primary system, and shall explain how the user determines the appropriate input for any proposed design that will use the input.

~~The ACM Compliance Documentation shall also d~~Describe any constraints on each primary system, such as maxima, minima, ranges, or specific design applications.

4.3.6.3 Cooling Equipment

~~*Description:*~~

~~The ACM Compliance Documentation must d~~Describe how the user ~~must~~shall enter parameters that describe cooling equipment type, efficiency, capacity, or other parameters that are required to model the operation of the cooling system. ~~The ACM Compliance Documentation must d~~

Describe to the user how to enter the number and names of zones served by the HVAC system so that the ACM may determine the use of single or multi-zone systems and so that the user correctly assigns each zone to an HVAC system serving it. ~~The ACM Compliance Documentation must d~~

Describe how the user ~~must~~shall enter parameters that determine the required efficiency of the equipment, the efficiency descriptor that ~~must~~shall be used, and, when applicable, heat transfer fluid.

~~The ACM Compliance Documentation must d~~Describe each type of cooling equipment that the ACM is capable of modeling, and any constraints, such as maxima, minima, or ranges, that the user ~~must~~shall consider when modeling specific equipment.

4.3.6.4 Heating Equipment

~~*Description:*~~

~~The ACM Compliance Documentation must d~~Describe how the user ~~must~~shall enter parameters that describe heating equipment type, efficiency, capacity, or other parameters that are required to model the operation of the heating system. ~~The ACM Compliance Documentation must d~~

Describe how the user ~~must~~shall enter parameters that determine the required efficiency of the equipment, the efficiency descriptor that ~~must~~shall be used, and, when applicable, the part load ratio and heat transfer fluid.

~~The ACM Compliance Documentation must d~~Describe each type of heating equipment that the ACM is capable of modeling, and any constraints, such as maxima, minima, or ranges, that the user ~~must~~shall consider when modeling specific equipment.

4.3.6.5 Standard Design System Selection

~~*Description:*~~

~~The ACM Compliance Documentation must i~~Include a description of the required user input for:

building type,

system type (especially single zone or multi-zone),

heating source, and

cooling source,

so that the ACM and the reference method can properly determine the Standard HVAC System and Plant in the standard building design.

~~The purpose of the ACM Compliance Documentation is to e~~Explain the proper use of the ACM for compliance purposes. ~~rather than the detailed procedures and assumptions of the reference method already described in this manual or in the ACM's technical documentation.~~

~~The ACM Compliance Documentation shall NOT~~ Do not describe the standard design system types that are used to generate the standard design budget~~, and~~

~~shall~~ Do not describe which system types in the standard design ~~must~~are ~~be~~ used as the basis for comparison to proposed design system types. Such information may be included as a separate Technical Engineering Document for the ACM.

~~The ACM Compliance Documentation shall d~~Describe any restrictions or limitations that the user should apply when entering parameters that describe the systems.

4.3.6.6 Cooling Efficiency of DOE Covered Air Conditioners

~~*Description:*~~

~~The ACM Compliance Documentation shall d~~Describe how the user determines the proper efficiency descriptor for air conditioners that are Covered Consumer Products, and how the user ~~must~~shall enter these descriptors into the ACM.

4.3.6.7 Cooling Efficiency of Packaged Equipment not Covered by DOE Appliance Standards

~~*Description:*~~

~~The ACM Compliance Documentation shall d~~Describe how the user determines the proper efficiency descriptor for packaged air conditioners that are not Covered Consumer Products, and how the user ~~must~~shall enter these descriptors into the ACM.

4.3.6.8 Efficiency of Cooling Equipment Included in Built-up Systems

~~Description:~~

~~The ACM Compliance Documentation shall d~~Describe the required user input parameters for:

- Type of central water chilling plant equipment,
- The number of central chilling units,
- The capacity of each unit,
- The electrical input ratio of each central chilling unit,
- The type of refrigerant to be used in each chilling unit.

4.3.6.9 Heating Efficiency of DOE Covered Equipment

~~Description:~~

~~The ACM Compliance Documentation shall d~~Describe how the user determines the proper efficiency descriptor for heating equipment that are Covered Consumer Products, and how the user ~~must~~shall enter these descriptors into the ACM.

4.3.6.10 Heating Efficiency of Equipment Not Covered by DOE Standards

~~Description:~~

~~The ACM Compliance Documentation shall d~~Describe how the user determines the proper efficiency descriptor for heating equipment that are not Covered Consumer Products, and how the user ~~must~~shall enter these descriptors into the ACM.

4.3.6.11 Electric Motor Efficiency

~~Description:~~

~~The ACM Compliance Documentation shall e~~Explain that the motor efficiency ~~must~~shall be determined as established in accordance with NEMA Standard MG1.

4.3.6.12 ARI Fan Power

~~Description:~~

~~The ACM Compliance Documentation shall d~~Describe how users enter the fan power for each system type.

4.3.6.13 Process Fan Power

~~Description:~~

~~The ACM Compliance Documentation shall e~~Explain that fans used exclusively for process ~~must~~shall not be modeled in the compliance run. ~~The Compliance Documentation shall d~~

Describe how users ~~must~~shall subtract out the portion of fan power used for process if the fan serves a process as well as conditioning the space.

4.3.6.14 Fan System Operations

~~Description:~~

~~The ACM Compliance Documentation shall d~~Describe the required schedules that are used for fan system operation. ~~The documentation must e~~

Explain how the ACM models intermittent fan operation for the residential units of high-rise residential buildings and hotel/motel guest rooms.

4.3.6.15 Fan Volume Control

~~Description:~~

~~The ACM Compliance Documentation shall d~~Describe the types of fan volume control that are available to the user, and any restrictions on the use of each fan system.

4.3.6.16 Design Fan Power Demand

~~Description:~~

~~The ACM compliance documentation shall d~~Describe how the user enters parameters describing the fan power. These parameters shall include the design brake horsepower, the design drive/motor efficiency, and the design motor efficiency, all at peak air flow rate. The parameters shall be provided for each supply and each return fan. ~~The compliance documentation shall e~~

Explain that if the user does not input the above required parameters, the ACM shall assume that no mechanical compliance will be performed and shall model the default mechanical system.

Explain how ACMs may combine return fans with the supply fan if and only if the controls are of the same type. For example, ACMs may combine fans if they all have variable speed drive control or if they all are constant volume fans.

4.3.6.17 Air Economizers

~~Description:~~

~~The ACM Compliance Documentation shall d~~Describe when economizers are required and when they are used as the basis of the performance compliance.

~~The ACM Compliance Documentation shall also d~~Describe how to enter parameters describing the economizer and its method of operation.

~~The ACM Compliance Documentation shall d~~Describe any restrictions on the modeling of economizers by the ACM.

4.3.6.18 Modeling Default Heating and Cooling Systems

~~Description:~~

~~The ACM Compliance Documentation shall e~~Explain that the ACM automatically selects and models default heating and cooling systems identical to the standard systems defined in ~~Section 2.4.2.(1)~~Chapter 2 (Standard Design Systems) for the following conditions:

1. Mechanical compliance not performed. The ~~Compliance Documentation~~User's Manual and Help System shall describe what parameters ~~must~~shall be entered by the user to allow the ACM to select the proper default heating and cooling systems such as the building type and the number of thermal zones. The documentation ~~must~~shall explain the guidelines for zoning a building as described in ~~Section 4.3.3.1 of this manual~~Chapter 2.
2. Mechanical compliance performed with no heating installed. The ~~Compliance Documentation~~User's Manual and Help System shall describe that the ACM automatically models the default heating system for spaces with no installed heating or spaces which use the existing heating system. The documentation shall also describe what parameters ~~must~~shall be entered by the user to allow the ACM to select the proper default heating system such as the building type and the number of thermal zones in the permitted space.
3. Mechanical compliance performed with no cooling installed. The ~~Compliance Documentation~~User's Manual and Help System shall describe that the ACM automatically models the default cooling system for spaces with no installed cooling or spaces which use the existing cooling system. The documentation shall also describe what parameters ~~must~~shall be entered by the user to allow the ACM to select the proper default cooling system such as the building type and the number of thermal zones in the permitted space.

4.3.6.19 Combining Like Systems

~~Description:~~

~~ACMs must e~~Explain that users may model like systems together as one system provided the systems serve the same thermal zone or the thermal zones served by the individual units are similar and are being combined. The characteristics that lead to zones being similar are described in ~~Section 4.3.3.1~~Chapter 2. The equipment being combined ~~must~~shall also all be of the same category.

A separate category shall exist for each change in efficiency standard level in the Appliance Efficiency Standards and in Section 112. These categories shall be listed in the supplement.

~~Multiple units of the same type fall into the following categories:~~

~~• Cooling Equipment~~

~~Single package < 65,000 Btuh~~

~~Split system < 65,000 Btuh~~

~~All package ≥ 65,000 and ≤ 75,000 Btuh~~

~~All package > 75,000 and < 135,000 Btuh~~

~~All package ≥ 135,000 and ≤ 760,000 Btuh~~

~~Condensing Units, Air-Cooled ≥ 135,000 Btuh~~

~~Condensing Units, Water or Evaporatively Cooled ≥ 135,000~~

~~Water Chillers, Water-Cooled < 150 tons~~

~~Water Chillers, Water-Cooled ≥ 150 and < 300 tons~~

~~Water Chillers, Water-Cooled ≥ 300 tons, ozone safe refrigerants~~

~~Water Chillers, Water-Cooled ≥ 300 tons, non-ozone safe refrigerants~~

~~Water Chillers, Air-Cooled < 150 tons~~

~~Water Chillers, Air-Cooled ≥ 150 and < 300 tons~~

~~Water Chillers, Air-Cooled > 300 tons~~

~~• Heating Equipment~~

~~Heat pumps, single package < 65,000 Btuh~~

~~Heat pumps, split system < 65,000 Btuh~~

~~Heat pumps, all ≥ 65,000 and ≤ 75,000 Btuh~~

~~Heat pumps, all > 75,000 and < 135,000 Btuh~~

~~Heat pumps, all ≥ 135,000 Btuh~~

~~Boilers, gas fired < 300,000 Btuh~~

~~Boilers, gas fired ≥ 300,000 Btuh~~

~~Boilers, oil fired < 225,000 Btuh~~

~~Boilers, oil fired ≥ 225,000 and < 300,000 Btuh~~

~~Boilers, oil fired ≥ 300,000 Btuh~~

~~Boilers, residual oil fired, < 300,000 Btuh~~

~~Boilers, residual oil fires, ≥ 300,000 Btuh~~

~~Furnaces, all fossil fuel fired < 225,000 Btuh~~

~~Furnaces, gas fired ≥ 225,000 Btuh~~

~~Furnaces, oil fired ≥ 225,000 Btuh~~

- ~~Fan Systems~~

~~Constant volume, FPI ≤ 0.8 watts/cfm~~

~~Constant volume, FPI > 0.8 watts/cfm~~

~~Variable volume, ≤ 25 HP, FPI ≤ 1.25 watts/cfm~~

~~Variable volume, ≤ 25 HP, FPI > 1.25 watts/cfm~~

~~Variable volume, > 25 HP, FPI ≤ 1.25 watts/cfm~~

~~Variable volume, > 25 HP, FPI > 1.25 watts/cfm~~

- ~~Water Heaters~~

~~Electric storage~~

~~Electric instantaneous~~

~~Gas storage ≤ 75,000 Btuh~~

~~Gas storage > 75,000 Btuh~~

~~Gas instantaneous~~

4.3.6.20 System Supply Air Temperature Control

~~*Description:*~~

~~The ACM Compliance Documentation shall d~~Describe the control strategies that the ACM can model, and ~~shall~~ describe the parameters that the user ~~must~~shall enter to model these strategies. At a minimum, the ACM ~~Compliance Documentation~~User's Manual and Help System ~~must~~shall describe strategies for constant supply air temperature when heating or cooling, and outdoor air reset for the cooling supply air temperature.

4.3.6.21 Zone Terminal Control

~~*Description:*~~

~~The ACM Compliance Documentation must d~~Describe when the user ~~must~~shall enter zone terminal control parameters, and how the user ~~must~~shall enter parameters for:

1. Variable air volume
2. Minimum box position
3. (Re)heating coil
4. Hydronic heating
5. Electric heating

~~The ACM Compliance Documentation shall e~~Explain the criteria for minimum box position for variable volume systems.

4.3.6.22 Pump Energy

~~*Description:*~~

~~The ACM Compliance Documentation shall e~~Explain that the ACM accounts for the pump energy for the hot water, chilled water, and condenser water piping systems.

For multiple pump systems, ~~the documentation shall~~ explain how to calculate the weighted average pump efficiency for the system.

~~The ACM Compliance Documentation must s~~Show the default values for the hot water, chilled water, and condenser loop piping systems.

4.3.6.23 Chiller Characteristics

~~*Description:*~~

~~The ACM Compliance Documentation shall d~~Describe how the user enters chiller parameters that are required in the ACM, the chiller options that are available within the ACM, and the constraints on these parameters. ~~The documentation must also s~~

Show default values for the chiller options.

4.3.6.24 Performance Curves for Electric Chillers

~~*Description:*~~

~~The ACM Compliance Documentation shall e~~Explain that the ACM allows modeling custom performance curves for electric chillers. ~~The documentation must d~~

Describe the input requirements for calculating the regression constants for the chiller performance. ~~The documentation must also e~~

Explain that the ACM uses default performance curves if the user chooses not to make any entries.

4.3.6.25 Air-Cooled Condensers

~~*Description:*~~

~~The ACM Compliance Documentation shall d~~Describe how the user is allowed to account for the characteristics of air-cooled condensers.

4.3.6.26 Cooling Towers

~~*Description:*~~

~~The ACM Compliance Documentation shall d~~Describe how the user enters cooling tower parameters that are required in the ACM, the cooling tower options that are available within the ACM, and the constraints on these parameters. ~~The documentation must also s~~

Show default values for the cooling tower options.

4.3.6.27 Service Water Heating

~~*Description:*~~

~~The ACM Compliance Documentation shall d~~Describe the parameters that the user ~~must~~shall enter to describe the water heating system, the efficiency of each water heater and the load that the water heater ~~must~~shall meet. ~~The ACM Compliance Documentation must also d~~

Describe that the user ~~must~~shall assign the load to individual water heaters when either more than one water heater is used to meet the load on one system, or when multiple systems are used in a building. When more than one water heater is used to meet the load for one system, the load distributed to each water heater in accordance with the following equation.

Equation N4-4

$$LOAD_k = LOAD_T \times \frac{OUTPUT_k + 453.75 \times VOL_k}{\sum_{m=1}^{n} (OUTPUT_m + 453.75 \times VOL_m)}$$

~~Equation 4.3.1~~

Where:

$LOAD_k$ = Portion of total load met by water heater k.

$LOAD_T$ = Total water heating load of system in Btu/hr.

$OUTPUT_m$ = Full load output capacity of water heater m.

VOL_m = Actual storage capacity in gallons of water heater m.

4.3.6.28 Duct Efficiency Calculation

~~*Description:*~~

~~The ACM Compliance Documentation shall d~~Describe the parameters that the user ~~must~~shall enter to describe the air distribution system when Chapter 7 and ACM Appendix NG are used in conjunction with verified duct sealing.

4.3.7 Water Heating

~~***4.3.5.1Description:***~~

Refer to Section 2.5, HVAC Systems and Plants~~Required Systems and Plant Capabilities~~ for modeling requirements for service water heating systems.

4.4 Optional Modeling Capabilities

~~The ACM Compliance Documentation shall p~~Provide detailed instructions on the documentation needed for optional capabilities, including instructions on how the ACM models the capability, which required capability will be used as the basis of the standard design for the capability, and any restrictions on the input values for the capability.

4.4.1 Additions and Alterations~~Optional Compliance Capabilities~~

~~The ACM Compliance Documentation shall d~~Describe how users model additions, alterations, and additions plus alterations to the existing building.

4.4.1.1 Additions Performance Compliance

~~*Description:*~~

Explain that a~~A~~n addition is treated similar to a new building in the performance approach. Since both new conditioned floor area and volume are created with an addition, all systems serving the addition will require compliance to be demonstrated. This means that either the prescriptive or performance method can be used for each stage of the addition's (construction).

Addition Only

Explain that ~~for~~ (additions) ~~Additions that show compliance with the performance method independent of the existing building, must~~shall meet the requirements for new buildings. ~~Standards §149(a)2 states that the envelope and lighting of the addition, and any newly installed space conditioning or service water heating system serving the addition, must meet the mandatory measures and the energy budget determined in the performance run.~~

Explain that t~~T~~he user ~~must~~shall input all envelope, lighting and HVAC data associated with new conditioned space. If the HVAC zone serving the addition includes a portion of the existing building, (pro-rate the capacity,

fan power and cfm of (the system serving the addition according to the design loads in the addition as compared to the loads in the whole zone.

Explain that i~~I~~f the permit is done in stages, the rules for each permit stage apply to the addition performance run. If the whole addition is included in the permit application, the rules for whole buildings apply.

Existing plus Addition

Explain that a~~A~~dditions may also show compliance by demonstrating that efficiency improvements to the existing building offset decreased addition performance. Standards §149(a)2 states that the envelope and lighting of the addition, and any newly installed space conditioning or service water heating system serving the addition, ~~must~~shall meet the mandatory measures just as if it was an addition only. It also allows the applicant to improve the energy efficiency of the existing building so that it meets the energy budget that would apply to the entire building, if the existing building was unchanged, and the addition complied on it own.

Demonstrate that the existing-plus-addition ~~This~~ analysis includes a calculation of the energy use of the existing building. In this approach, the (following steps ~~must~~shall be followed):

a) Collect and document all information on the existing building before the addition and/or remodel.

b) Analyze the energy performance of the existing building before any changes take place.

c) Analyze the energy performance of the existing building plus the addition, including any ~~changes~~ alterations to the existing building.

d) The estimated energy use of the ~~modified~~ (altered) existing building plus the addition ~~must~~shall be less than the estimated energy use of an addition that complies with the prescriptive standards and the estimated energy use of the original existing building.

Explain to the user that w~~W~~hen using this compliance approach, it is important to take into account all changes in fenestration, especially windows and skylights which are removed from or added to the existing house as part of the remodel. Credit may be gained in this context by insulating previously uninsulated parts of the building (envelope).

Note for the reader ~~It is important to note that~~ the term "entire building" means the ensemble of all enclosed space in a building, including the space for which a permit is sought, plus all conditioned and space within the structure.

~~To show compliance with this approach you need to follow the instructions in the computer program's compliance supplement.~~

When using this compliance approach it is important to take into account all ~~changes~~ alterations in the buildings features that are removed from or added to the existing building.

Documentation of the existing buildings features is required to be submitted with the permit application if this method is used.

4.4.1.2 Alterations Performance Compliance

~~*Description:*~~

~~Using the performance approach for the alteration is similar to demonstrating compliance with an addition.~~ Describe how to use the ACM with alterations.

Alteration Only and Existing with Alteration

Explain that a~~A~~ltered spaces that show compliance with the method independent of the existing building, ~~must~~shall meet the requirements for new buildings.

Explain ~~Standards §149(b)2 states~~ that the envelope and lighting of the alteration, and any newly installed conditioning or service water heating system serving the alteration, ~~must~~shall meet the mandatory measures.

Explain to the user which building envelope measures may be modified in the existing building to obtain compliance credit. See Section 149 of the Standards.

~~and the permitted space alone shall comply with the energy budget determined using an alternative computer program.~~

If the permit is done in stages, explain that the rules for each permit stage apply to the alteration performance run.

Explain that i~~I~~f all the alterations' components, including the envelope, mechanical and lighting systems, are included in the permit application, the rules for whole buildings apply.

Explain ~~Existing with AlterationAlterations may also show compliance by demonstrating that efficiency improvements to the existing building offset decreased performance of the permitted space. Standards §149(a)2. states that the envelope and lighting of the alteration, and any newly installed space conditioning or service water heating system serving the alteration, must meet the mandatory measures just as if it was an alteration only. It also allows the applicant to improve the energy efficiency of the existing building so that it meets the energy budget that would apply to the entire building, if the existing building was unchanged, and the permitted complied on its own.~~

~~To show compliance with this approach you need to follow the instructions in the computer program's compliance supplement~~

~~When using this compliance approach~~ that it is important with this approach to take into account all changes in the buildings features that are removed from or added to the existing building as a part of the alteration.

~~Documentation~~ Explain that ~~of the~~ existing buildings features shall be documented and ~~is required to be~~ submitted with the permit application ~~if this method is used~~.

4.4.1.3 Alternate Performance Compliance Method

~~*Description:*~~

Explain that a~~A~~ny addition, alteration or repair may demonstrate compliance by meeting the applicable requirements for the entire building.

~~Using this method,~~ Explain that the entire building could be shown to comply in permit stages or as a whole building. The rules for new buildings, and both permit stage compliance and whole building compliance would apply.

Explain that existing buildings features shall be documented and submitted with the permit application.~~Documentation of the existing buildings features is required to be submitted with the permit application if this method is used.~~

4.4.2 Alternative Occupancy Selection~~Optional Loads Capabilities~~

4.4.2.1 Alternate Occupancy Selection Lists

Explain how to use alternate selection method for choosing occupancies.

~~*4.4.2.14.4.2.1 Conditioned Floor Areas*~~

~~*Description:*~~

~~The ACM Compliance Documentation must describe how the user determines and enters the conditioned floor area for each occupancy area and for the building as a whole. The ACM Compliance Documentation must state that the conditioned floor area for spaces within the building DO NOT include the area under permanent floor-to-ceiling height partitions, but the conditioned floor area for the whole building includes the area under these partitions. This conforms with the Standards which define Conditioned Floor Area as the floor area (in square feet) of enclosed conditioned space on all floors of a building, as measured at the floor level of the exterior surfaces of exterior walls enclosing conditioned space.~~

~~But for internal and enclosed spaces lighting power allotments for the Area Category Method are determined from floor areas:~~

~~? Where areas are bounded or separated by interior partitions, the floor space occupied by those interior partitions shall not be included in any area.~~

~~*4.4.2.24.4.2.2 Footprint Areas*~~

~~*Description:*~~

~~The ACM Compliance Documentation must describe how to determine and describe building footprint(s). The description must include the following information.~~

~~1. All directly or indirectly conditioned volume are included in the footprint area.~~

~~2. All building interior cavities (atria and courtyards) are included in the footprint area.~~

~~3. Floors have the same footprint if:~~

~~They have identical plan views, i.e., having the same shape and area after including all building's interior cavities,~~

~~They have identical floor to ceiling distances, and~~

~~They have identical window patterns.~~

~~4. Floors having identical footprints may be modeled using Floor Multipliers or an equivalent technique. The user shall model the lowest floor having that footprint and the ACM shall duplicate these features for all floors of the building having that footprint.~~

~~*4.4.2.34.4.2.3 Geometry of Building's Interior Cavities*~~

~~*Description:*~~

~~The ACM Compliance Documentation must describe how to model building's interior cavities such as atria and courtyards. The description must include definitions of atria and courtyards and describe the difference between them, information about when the cavity is modeled as a conditioned space and when it is modeled as outside, and how to model the partitions separating the conditioned space from the building's interior cavities.~~

~~*4.4.2.44.4.2.4 Self Shading*~~

~~*Description:*~~

~~The ACM Compliance Documentation shall describe how the user enters parameters describing building self shading. The ACM Compliance Documentation shall describe any restrictions on the parameters. Only parts of the building that are included in the permit for which the building is being modeled are allowed to be included in the building self shading. Adjacent buildings or existing buildings may not be modeled as building self shading. These building parts that are providing shading must be a contiguous building with the conditioned area of the portion of the building that is being analyzed for compliance. Building self shading may shade either the glazing or opaque surfaces.~~

4.4.2.2 Lighting Controls

~~*Description:*~~

The ACM ~~Compliance Documentation~~User's Manual and Help System ~~must~~shall describe how to enter lighting controls, how to account for installed lighting and how to document the location and quantity of lighting on the appropriate forms.

4.4.2.3 Light Heat To Zone

~~*Description:*~~

The ACM ~~Compliance Documentation~~User's Manual and Help System ~~must~~shall describe how to enter the light heat that goes to the zone and to the return air, how to account for the light energy, and how to document the type, location, and quantity of lighting fixtures for which this option is being modeled on the appropriate forms.

4.4.3 HVAC Systems ~~&~~ and Plant ~~Optional Capabilities~~

~~*4.4.3.14.4.3.1 System Areas*~~

~~*Description:*~~

~~The ACM Compliance Documentation must describe the number of system areas (a minimum of fifteen) that the ACM is capable of modeling. System areas may only be combined when there are more than fifteen (15) system areas in a proposed building design.~~

~~The ACM Compliance Documentation must explain the characteristics that will lead to system areas being similar, so they may be combined into one system area for modeling purposes, and the characteristics that will lead to the system areas being dissimilar. An example of similar system areas may be central core areas on multiple floors of a multi-story building. An example of dissimilar system areas may be a perimeter area on one facade of a building, part of which includes glazing and part of which has no glazing. The conditions in these two areas are sufficiently dissimilar that the areas should be treated as two system areas (if they are independently controlled) even though they are on the same floor and facing the same orientation.~~

~~*4.4.3.24.4.3.2 Thermal Zones*~~

~~*Description:*~~

~~ACMs shall explain that thermal zoning is performed by the program during the compliance run and no user input is required.~~

~~*4.4.3.34.4.3.3 Optional Systems*~~

~~*Description:*~~

~~The ACM Compliance Documentation shall i~~Include descriptions of all the optional systems that the ACM is capable of modeling. Optional systems that are allowed are described in Section ~~3.5.2~~3.3.5.

~~The ACM Compliance Documentation shall~~ ~~p~~Provide~~d~~ a detailed description of each optional system that is modeled, ~~shall~~ describe the system type that is used as the comparative standard design as described for minimum system capabilities, and ~~will~~ describe any restrictions on the capabilities of each optional system.

~~The ACM Compliance Documentation shall r~~Require the user of the ACM to provide manufacturers data, plans and specifications to document the assumptions used for each optional system.

4.5 Vendor Defined Optional Capabilities

Optional capabilities that are not described in this manual may be proposed by ACM vendors. ~~These Capabilities may be approved by the Commission when sufficient documentation is provided to justify that the capability achieves the estimated energy savings.~~ Once the Commission has accepted a vendor defined optional capability, the ACM ~~Compliance Documentation~~User's Manual and Help System ~~must~~shall include a description of how the user enters the appropriate parameters for the capability, a description of the documentation that ~~must~~shall be provided when using the capability, and a description of any restrictions that ~~must~~shall be applied when using the capability.

4.6 Compliance Forms

A chapter or section ~~must~~shall focus on how standard compliance forms are automatically generated and how to get diagnostic output when a building fails to comply (since compliance forms cannot be generated when a building fails to comply~~.~~). ~~Alternative Calculation Methods (ACMs~~ACMs ~~) must~~shall print out the standard compliance forms with essentially the same format and layout ~~as those in Chapter 2 or the Appendices~~to the standard forms. Mention should be made of:

- The requirement to document Tailored Lighting Allotments with lighting plans and prescriptive ~~LTG-3~~ forms for each HVAC zone;

- The requirement to document Tailored Ventilation and/or Process Loads;
- The requirement to complete other forms for submittal ~~(e.g., ENV-3)~~ when applicable;
- The requirement to document the zoning of the building if the zoning is not evident on the plans; and,
- Certificate of Compliance ~~(PERF-1)~~ when applicable.

At least one sample of each compliance form ~~must~~shall be included. It is recommended, but not required, that the ACM ~~Compliance Documentation~~User's Manual and Help System contain several sample variations of each compliance form as needed to illustrate different compliance scenarios and input types ~~(see Appendices below)~~.

~~*4.7Appendices*~~

~~Appendices may be an appropriate way to handle sources of information that are not crucial in explaining the basic functioning of the program for compliance. For example:~~

- ~~An appendix may contain variations of compliance forms as described above.~~
- ~~An appendix may include a series of construction assembly (ENV-3) forms to aid the ACM user.~~
- ~~An appendix may reprint important sections of the *Nonresidential Manual* or this manual that are crucial to modeling buildings correctly for compliance with the ACM.~~

5. Reference Method Comparison ~~Minimum Conformance~~ Tests

This chapter explains the methods used to test the modeling and input capabilities of Alternative Calculation Methods (ACMs) relative to the reference program~~, DOE 2.1E, and the custom budget procedure described in this manual~~. ~~-~~The ACM ~~must~~shall be able to accept all required inputs but it need not be capable of modeling all features as long as it automatically fails proposed designs with features beyond its accurate modeling capabilities. For example, a simplified calculation method modeling only single zone HVAC systems could be approved if it automatically fails proposed designs that enter multi-zone HVAC systems for the proposed design ~~by an appropriate margin~~. For ACMs with limited capabilities, the vendor ~~must~~shall inform ~~the~~ users that the ACM is not capable of modeling certain ~~capabilities~~ features~~, and for compliance purposes, the ACM automatically~~ shall ~~fails any proposed buildings~~ design that uses inputs exclusive to with ~~said capabilities~~. While most of the tests are performed in three climate zones, some of the tests use other climate zones ~~are used for some of the tests~~.

There are a total of 76 specified tests.

All the runs described in this chapter ~~must~~shall be performed with the ACM, and run results ~~must~~shall be summarized on the forms contained in Appendix NA.

5.1 Overview

ACMs calculate six components of annual building source energy use:

1. Lights
2. Space cooling
3. Space heating
3. Indoor fans
4. Receptacles
5. Service water heating

To test the minimum ACM capabilities ~~for modeling annual source energy~~, it is necessary to perform a series of computer runs. Each computer run represents a systematic variation of one or more features that affects ~~total source~~ time dependent valuation (TDV) ~~of~~ energy use. Some of the parametric runs are performed in several climate zones for more than one prototype building. Most, however, are designed for only one prototype in just one or two of the climate zones.

For an ACM to be approved, the criteria described in Section 5.1.4 ~~must~~shall be met. This criteria compares the energy use differences, calculated using the ACM, to the energy use differences calculated using the reference calculation method. The energy use difference or compliance margin for each of these is the difference between any simulated proposed building design TDV energy ~~budget~~ and the standard design's TDV energy ~~budget~~. ~~The standard design is the corresponding simulated building if the design had included the features required by the prescriptive standards.~~ For this comparison the same ~~proposed building~~proposed design ~~-~~and ~~its~~ corresponding standard ~~building~~ design ~~must~~shall be used for both the candidate ACM ~~as is used with~~ and the reference program. A candidate ACM shall ~~These criteria must be~~ meet ~~for~~ (all) ~~(each and every one)~~ of the tests described in this manual. ~~where the reference method uses DOE 2.1E inputs and files similar to those described in the example input files shown in the appendices and the tests described in this chapter to model the proposed and standard buildings.~~

The ACM vendor is responsible for running the tests for the candidate ~~ACM~~ACM and the reference method~~ that is being submitted for approval~~. The vendor shall provide documentation, ~~showing the~~ reasons and engineering justification for ~~any~~ all inputs~~,~~ to the ~~vendors program~~ACM and the reference method~~, that, upon review, appear to produce erroneous or misleading results~~. ~~If the vendor believes that the reference program results presented in this manual and its supplement do not reflect the proper procedures described in Chapters 2 and 3 of this manual and (where not otherwise specified herein) the nonresidential energy efficiency standards, the vendor may also submit runs and results for the reference program, DOE 2.1E as an alternative to the results published in this manual. The vendor must thoroughly justify and document the reasons for the differences in the reference program inputs and results from the inputs and results presented in this Manual and the Supplement. If the Commission accepts the vendor's justification, the ACM may be approved based on the vendor's results for some of the tests.~~

5.1.1 Base Case Prototype Buildings

The tests are performed with ~~Descriptions of~~ four ~~theoretical~~ prototype buildings, ~~are~~ summarized in the following paragraphs. The letter designation is used as part of the label for each computer run.

A) This prototype is a ~~theoretical~~ one-story building measuring 30 ft by 75 ~~feet~~ and is 12 ~~feet~~ high. Glass exists in a continuous band around the entire building perimeter with ~~its bottom edge~~ the sill 2.5 feet above the floor. The building has a single thermal zone.

B) This prototype is a ~~theoretical~~ two-story building measuring 60 ft by 60 ~~feet~~ ft and is 24 ~~feet~~ ft high. Glass exists in a mostly continuous band around the entire building perimeter on each floor with ~~its bottom edge~~ the sill at 2.5 ~~feet~~ ft above the floor. Most tests using prototype B have no interior zones. ~~For all practical purposes the applicant may assume adiabatic, mass-less walls facing the interior zones.~~ The building has four thermal zones per floor that are 15 ~~feet~~ft deep. In most of the tests using this prototype the interior zones have been purposely removed to increase the sensitivity to envelope measures using separate orientations and wall types for each ~~HVAC~~ thermal zone. The prototype should have adiabatic, mass-less walls separating the perimeter zones from the unconditioned interior zones. These separate zones are more sensitive to the measures examined than an envelope- dominated single zone which can mask orientation and individual wall effects. The sensitivity to HVAC sizing methods is also increased when this prototype is envelope dominated.

   In some tests to measure internal energy use differences or economizer cycle sensitivity, the 30 ft by 30 ~~foot~~ft interior space becomes two conditioned zones (one on each floor) served by a separate package variable air volume system. In these cases there are five thermal zones per floor.

C) This prototype is a six-story building measuring 60 ft by 60 ~~feet~~ft by 66 ~~feet~~ft high. Glass exists in a mostly continuous band around the entire perimeter of the building on each floor with ~~its bottom edge~~ the sil 2.5 ~~feet~~ft above the floor. The building has a total of fifteen thermal zones: Five on the first floor, five on the middle floors and five on the top floor. A multiplier of four is used for the middle floors.

D) This prototype ~~is like~~ represents a tenant improvement space in that it has only two exterior walls with two demising "party" walls~~ with R-11 insulation between steel framing members~~. The "party" walls are each adjacent to an unconditioned space of the same dimensions as the conditioned space (viz. 20 ~~feet~~ft wide, 60 ~~feet~~ft deep and 12 ~~feet~~ft high). These party walls have nominal 2x4 steel stud framing with R-11 insulation between framing members and 0.5" sheetrock on either side [CONS = DEMISING]. The unconditioned space has three other exterior walls that use the IV11-A2 ~~W1A~~ wall-type construction. The roof/ceiling of the unconditioned spaces has R-11 insulation between 2x6 wood framing members [[IV3-A2]~~RF1B~~]. The D prototype building (both conditioned and unconditioned spaces) ~~is built~~ has a slab-on-grade floor. The unconditioned spaces are modeled using a slab without carpet or pad and with no slab edge insulation. For the conditioned space, the ~~nominally "west"~~ back wall is heavyweight concrete with no windows and a wood door and the ~~front "east"~~ front wall is a steel-framed wall with glazing. The space is 20 ~~feet~~ft wide and 60 ~~feet~~ft deep and has a height of 12 ~~feet~~ft. The glazing begins at ground level but varies in height from 4.8 to 6 ~~feet~~ft. Tests with this prototype use overhangs and skylights and rotate the whole building geometry.

The base case prototype buildings have the same geometry and ~~zonation~~ zoning in all climate zones~~, although prototype B may have ten (10) zones rather than eight (8) for some of the tests.~~ . Default building parameters for the proposed designs are indicated for each series. Parameters not described or defaulted in the series are those given in Appendix NF.

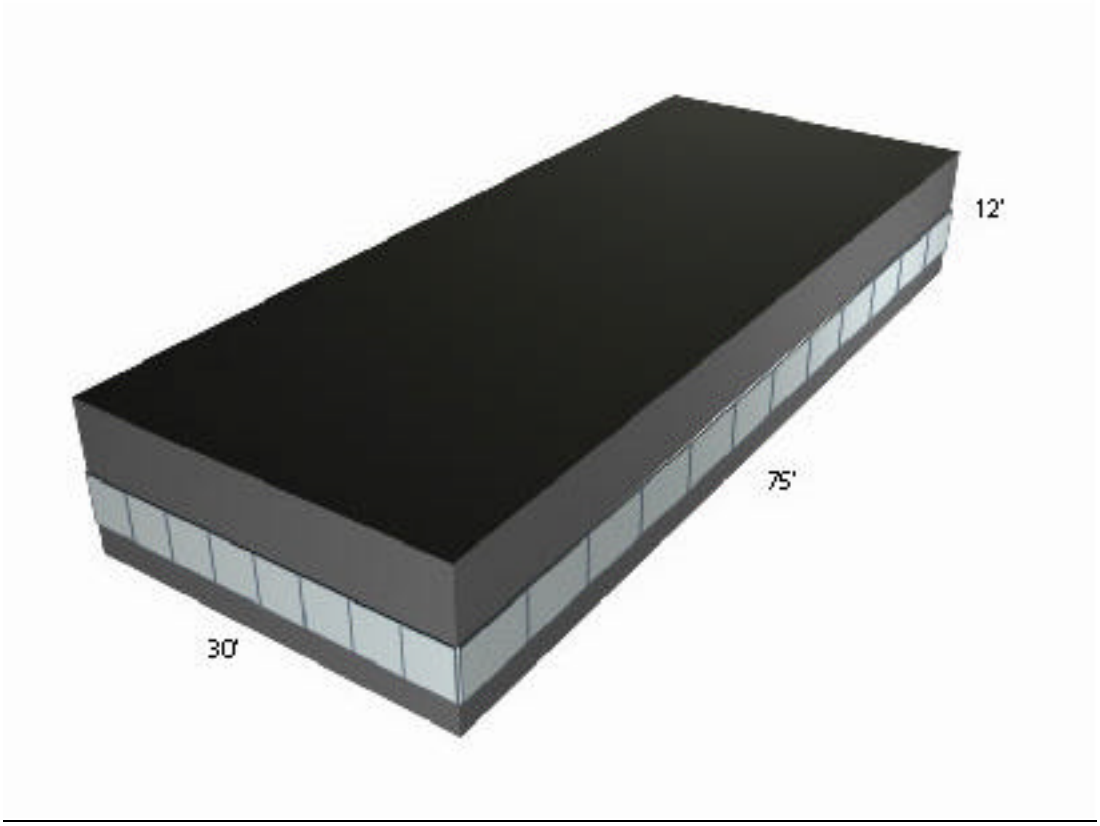

Figure N5-1 – Prototype A

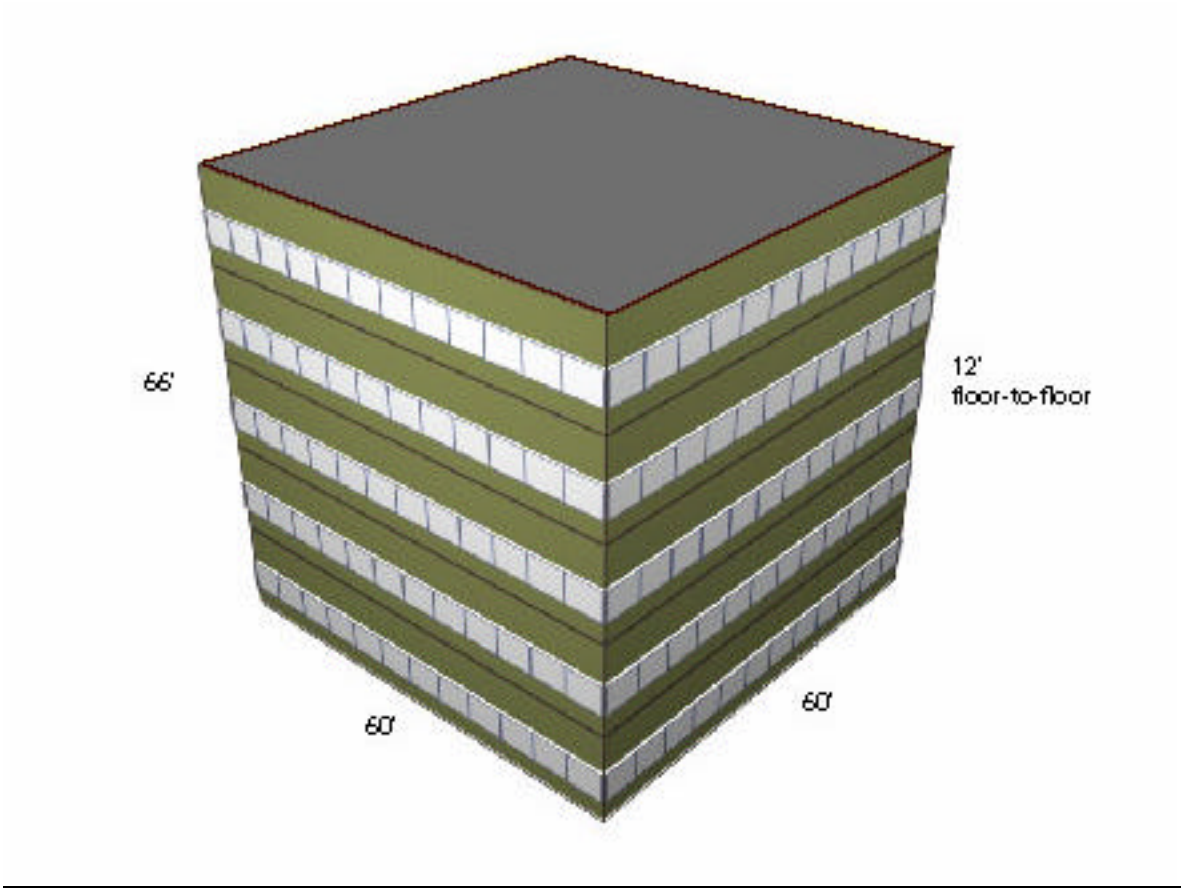

Figure N5-2 – Prototype B and C

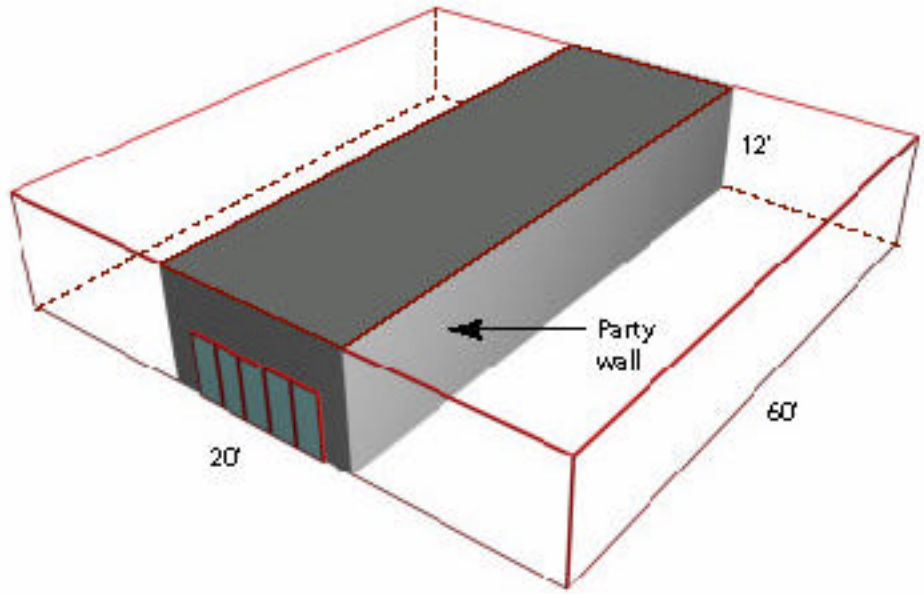

Figure N5-3 – Prototype D

5.1.2 Climate Zones

Eleven of the 16 climate zones ~~and a sampling of city locations within climate zones~~ are used in the tests ~~(Table 5-1)~~. These were chosen to represent distinctly different climate types.

Table N5-1 – Climate Zones Tested

Climate Zone	~~Weather Location~~Example Cities
1	Arcata, Eureka
3	Oakland, San Francisco
7	San Diego
9	Pomona, UCLA
10	Riverside
11	Red Bluff, Redding
12	Sacramento, Davis, ~~Crockett, Fairfield,~~ Roseville
13	Fresno, Visalia
14	China Lake
15	El Centro, Palm Springs
16	Mount Shasta, Tahoe City

5.1.3 Labeling Computer Runs

Each computer run used for the certification tests is given a precise designation to make it easier to keep track of the runs and to facilitate analysis. The following scheme is used:

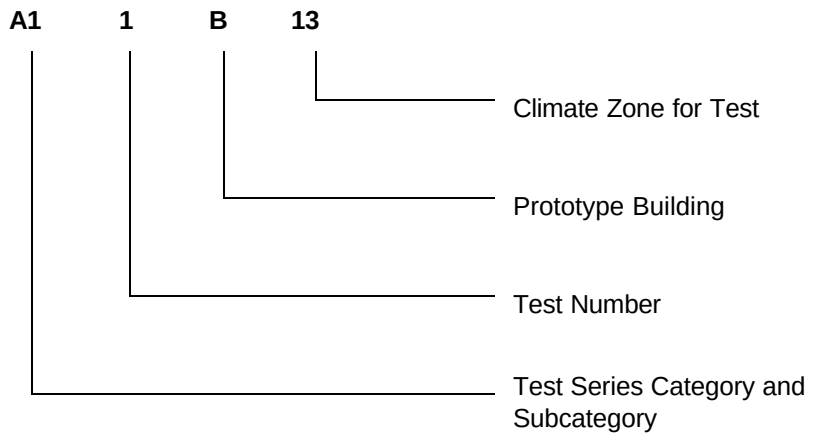

~~The first three alphanumeric characters uniquely identify the test number. In this case A11 uniquely identifies the test case.~~

5.1.4 Test Criteria~~Comparison of Results~~

~~The~~ Software vendors shall perform a series of computer runs that systematically vary ~~model~~ the building ~~characteristics~~ prototypes described in Section 5.1.1. These tests consist of a series of matched pairs of computer runs. Each matched pair consists of a proposed design (prototype variation) and the standard design equivalent to the proposed design. The standard design equivalent is the proposed design automatically reconfigured by the ACM according to the rules presented in Chapter 2.

The variations or computer runs are described in Sections 5.2 and 5.3. The computer runs shall all be performed using the modeling assumptions described in this document. For each computer run, the results from the candidate ACM ~~must~~shall be within an acceptable range as defined in this section. ~~as modifications to each of~~

~~the base case buildings described in Section 5.1. The applicant shall provide results of runs for these building characteristics using consistent and equivalent input for the vendors ACM.~~ The results of these runs shall be compared to the results of a custom budget for the standard building developed by the same program. The applicant shall calculate the following.

$$DT_a = PT_a - ST_a$$

and the Commission has already determined:

$$DT_r = PT_r - ST_r$$

Where:

Subscript "a" represents the results of the applicants ACM and subscript "r" represents the results of the reference program, and

PT is the ~~total source~~ TDV energy for the proposed budget calculated for the building in kBtu/ft^2-yr,

ST is the ~~total source~~ TDV energy for the standard budget in kBtu/ft^2-yr.

For all tests, DT_a ~~must~~shall be greater than $0.85 \times DT_r - 1$ kBtu/ft^2-yr when $DT_r \geq 0$ and DT_a ~~must~~shall be greater than $(1.15 \times DT_r - 1)$ when $DT_r < 0$ to be accepted for compliance use. If any of the tests fail to meet these criteria then the ACM will not accepted for compliance use.

For ~~In addition, for individual tests of~~ lighting and receptacle loads tests ~~(or water heating) measures~~, the ~~resultant lighting and receptacle source~~ TDV energy use of the candidate ACM~~s~~ shall be within 2.0% of ~~the resultant lighting source energy use of~~ the reference ~~program or the Commission shall not accept the applicants ACM~~method.

The reference method does not allow for undersized systems to be simulated for compliance purposes. **ACMs ~~must~~shall also model adequately sized HVAC systems**~~ and c~~Compliance runs that ~~indicate~~ result in undersized equipment or equipment that cannot meet the heating or cooling loads for a significant fraction of the simulated run shall not be approved for compliance purposes. **For ACMs ~~whose calculational engines~~ that report the hours that loads are not met or the hours outside of throttling range, reports ~~must~~shall indicate that these hours are less than 10% of the hours of a year for each and every test in order for an ACM to qualify for approval.**

The vender shall ~~results of these runs are~~ summarize the results ~~d in tabular form as a part of~~ on the forms provided in Appendix NA ~~for the vendor to enter the data from their ACM test results~~. As previously described, the vendor applicant may challenge the reference program results by providing alternative reference program runs and adequate documentation justifying different reference program results from those given in the Appendix NA.

5.2 General Requirements ~~Required Capabilities Tests~~

An ACM ~~must~~shall automatically perform a variety of functions including those described in Chapter 2.

- ~~It~~ The ACM ~~must~~shall accept a specified range of inputs for the proposed design, and ~~. It must~~ then use these inputs to describe the proposed building on the required output forms. The proposed building inputs are also used to create a standard design building based on the proposed building and the energy budget generation rules used to incorporate the prescriptive requirements into the proposed design. Certain building descriptors remain the same for both the proposed and standard design but others will change in ways that depend upon the design characteristics, the climate zone, and the prescriptive and mandatory requirements of the standards.
- ~~ACM assumptions for the DOE 2.1E computer program are given in brackets, e.g. [OH-A=0] or are described in information blocks of CAPITAL LETTERS.~~ The ~~energy budget generator~~ ACM ~~must~~shall automatically define the standard design; determine the proper capacity of the HVAC equipment for the standard design; adjust the HVAC capacity of the standard design in accordance with the reference method; and automatically run the standard design to establish the energy budget.

- The ACM shall perform~~s~~ the energy budget run in sequence with the compliance run with no user intervention or input beyond that of the proposed design. The results are reported in Part 2 of the Performance Certificate of Compliance Form (PERF-2) when the proposed building design complies.

~~At a minimum t~~The applicant ~~will~~ shall perform the tests listed in this Manual to assure ~~the proper response of~~ that the ~~ACM~~ACM produces results in general agreement with the reference method. These tests verify the implementation of the custom budget procedure, program accuracy and performance relative to the reference program, and acceptable use of calculation inputs.

~~These tests consist of a series of matched pairs of computer runs. Each matched pair consists of a proposed design (prototype variation) and the standard design equivalent to the proposed design. The standard design equivalent is the proposed design automatically reconfigured by the ACM according to the rules presented in Chapter 2.~~

The vendor/applicant ~~must~~shall submit the completed forms from Appendix NA~~, ACM Application Test Results Summary~~ and backup documentation for the results of the tests described herein. For buildings that DO NOT COMPLY, the vendor ~~must~~shall supply ~~diagnositc~~diagnostic output that indicates noncompliance and gives the TDV energy ~~budget~~ information needed to evaluate the test criteria, including the lighting and receptacle portions of the energy budgets for both proposed and standard design. For building designs that do comply, the vendor/applicant ~~must~~shall submit copies the Certificate of Compliance generated by the ACM. ~~of Part 2 of the PERF-1 forms for all of the test cases.~~

~~Detailed information on the local and description of exterior partitions (walls, roof/ceiling, and floors) and the HVAC system and equipment information for each zone of each test is given in Appendix F.~~

For some of the tests, specific occupancy mixes are used ~~in these tests~~ and these are designated by the primary occupancy. The distribution of occupancy areas of these mixes are given in the table below. These mixes were selected to result in lighting energy densities nearly the same as those for the occupancy assumptions for spaces/areas without lighting plans.

Table N5-2 – Occupancy Mixes for Tests

Primary Occupancy	Suboccupancy Percentages			
Mix Type	*Primary*	*Office*	*Corridor/Support*	*Storage*
Office	87.5%	87.5%	12.5%	
Retail	85.0%	3.5%	3.5%	8.0%
Clinic	85.0%		15.0%	
Storage	72.0%	18.0%	10.0%	
Grocery	82.0%	4.0%	6.0%	8.0%
Theater	70.0%	16.0%	4.0%	Lobby 10.0%
Restaurant	Dining Area 75.0%	Kitchen 15.0%	5.0%	*Storage* 5.0%
Other	*Other*100.0% (Receptacle Load at 1.0 W/ft^2)			

5.2.1 Partial Compliance Tests - A1 Series (3 tests)

The partial compliance tests use the single zone version of the A building prototype with the same features used (except as noted) in test C11A10 in Section 5.2.4.1.

Test A11A09: Building prototype A - climate zone 09 - Pomona

Partial compliance - envelope only.

Test A12A09: Building prototype A - climate zone 09 - Pomona

Partial compliance - lighting only - Envelope is already existing as input. Proposed lighting plans specify lighting watts per square foot:

Subzone Space Occupancy	Percentage of Area	Proposed Lighting
Grocery Sales Area	82%	1.50
Grocery Storage (Commercial Storage)	8%	0.80
Support/Corridors	6%	0.80
Office	4%	1.80

Test A13A09: Building prototype A - climate zone 09 - Pomona

Partial compliance - envelope and mechanical only. No lighting plans submitted for grocery occupancy.

5.2.2 Exterior Opaque Envelope Tests

The exterior wall tests help to evaluate whether the applicant ACM inserts the correct wall assemblies into the standard design as a function of the proposed design including wall frame type, heat capacity, occupancy type and climate zone. These tests use the eight (8) zone B building prototype without interior zones to increase the tests sensitivities to envelope energy impacts.

The default characteristics for these tests are:

- Prototype building B (geometry, zones, and walls)
- Office occupancy with no lighting plans
- 3.5 inch concrete slab-on-grade floor [U-F CONS=SLABC]
- Wood-framed roof - framing materials and layers type ~~RF1C-~~IV2~~3~~-A5~~- wood framing fraction is 10%.~~.
- All wood-framed vertical walls [IV9-A2~~W2A~~ walls] have a 2~~1~~5% framing fraction, i.e., 7~~8~~5% of the wall is insulation.
- Package single zone system (gas furnace) without economizers or package variable air volume system with economizer cycle [Standard DOE 2.1E Economizer] and 75 degree Fahrenheit economizer limit temperature - [ECONO-LIMIT-T = 75.0]
- Window wall ratio = .10 for opaque envelope tests
- [WWR = 0.10]
- Glazing performance equal to prescriptive requirements
- Lighting wattage at 1.50 watts per square foot

Opaque Exterior Envelope - A2 Series (7 ~~(~~tests~~)~~)

These tests use the default B prototype building geometry and zone configuration. Run tests using wall assemblies ~~W2A~~IV9-A2, ~~W1A~~IV11-A2, ~~W4A~~IV13-D5+IV19~~14~~-A1, and ~~W3A~~IV13-B2+IV19~~14~~-F7 for north, east, south and west walls respectively and roof assembly IV3-A5~~RF1C-NR~~. The framing percentage used for wood frame walls, e.g., wall type ~~W2A~~IV9-A2, is 2~~1~~5% ~~[i.e. 15% of the wall is W2A-FRM and 85% is W2A-INS] and the framing percentage used for wood frame roof/ceilings is 10% [e.g. 90% is RF1C-NR and 10% is RF1C-NRF]~~. For Tests A21 and A25 use package single zone [PSZ] HVAC equipment in climate zones 13 and 03 respectively. For tests A22, A23, A24 use a package variable air volume [PVAV] system in climate zones 13, 06, and 16 respectively. Test again (A26 and A27) using wall assemblies ~~W2D~~IV9-A3, ~~W1D~~IV11-B4, ~~W4D~~IV13-D5+IV19~~14~~-F7, and ~~W3B~~IV13-B2+IV19~~14~~-D7 for north, east, south and west walls respectively and roof assembly ~~RF1D-NR~~IV3-H5. For test A26 use a package single zone [PSZ] HVAC system in climate zone 13 and for test A27 use a package variable air volume [PVAV] system in climate zone 16.

Table N5-32 – A2 Test Series (Summary)

Test Run	HVAC System	North Wall	East Wall	South Wall	West Wall	Roof
A21B13	PSZ	IV9-A2~~W2A~~	IV11-A2~~W1A~~	IV13-D5+IV19~~14~~-A1~~W4A~~	IV13-B2+IV19~~14~~-F7~~W3A~~	IV3-A5~~RF1C-NR~~
A22B13	PVAV	IV9-A2~~W2A~~	IV11-A2~~W1A~~	IV13-D5+IV19~~14~~-A1~~W4A~~	IV13-B2+IV19~~14~~-F7~~W3A~~	IV3-A5~~RF1C-NR~~
A23B06	PVAV	IV9-A2~~W2A~~	IV11-A2~~W1A~~	IV13-D5+IV19~~14~~-A1~~W4A~~	IV13-B2+IV19~~14~~-F7~~W3A~~	IV3-A5~~RF1C-NR~~
A24B16	PVAV	IV9-A2~~W2A~~	IV11-A2~~W1A~~	IV13-D5+IV19~~14~~-A1~~W4A~~	IV13-B2+IV19~~14~~-F7~~W3A~~	IV3-A5~~RF1C-NR~~
A25B03	PSZ	IV9-A2~~W2A~~	IV11-A2~~W1A~~	IV13-D5+IV19~~14~~-A1~~W4A~~	IV13-B2+IV19~~14~~-F7~~W3A~~	IV3-A5~~RF1C-NR~~
A26B13	PSZ	IV9-A3~~W2D~~	IV11-B4~~W1D~~	IV13-D5+IV19~~14~~-F7~~W4D~~	IV13-B2+IV19~~14~~-D7~~W3B~~	IV3-H5~~RF1D-NR~~
A27B16	PVAV	IV9-A3~~W2D~~	IV11-B4~~W1D~~	IV13-D5+IV19~~14~~-F7~~W4D~~	IV13-B2+IV19~~14~~-D7~~W3B~~	IV3-H5~~RF1D-NR~~

5.2.3 Envelope Glazing Tests

The envelope glazing tests are to check whether the ACM applicant inserts the correct vertical glazing types and areas into the standard design as a function of proposed design glazing orientation, area, occupancy and display perimeter length. As for the opaque envelope tests, the eight (8) zone B prototype building is used to enhance the sensitivity of the tests for envelope measures.

The prototypes for these tests have the following characteristics:

- Prototype building B, and if not otherwise specified.
- Retail store occupancy with no lighting plans, hence lighting is at 1.70 watts per square foot.
- Same wall and roof assemblies as for Section 5.2.2 base case file, namely, wall assemblies ~~W2A~~IV9-A2, ~~W1A~~IV11-A2, ~~W4A~~IV13-D5+IV19~~14~~-A1, and ~~W3A~~IV13-B2+IV19~~14~~-F7 for north, east, south and west walls respectively and roof assembly ~~RF1C-NR~~IV3-A5.
- Window wall ratio default of 0.35 [WWR=0.35]
- 3.5 inch concrete slab-on-grade floor
- Package variable air volume system with economizer cycle and 75 degree Fahrenheit economizer limit temperature - [ECONO-LIMIT-T = 75.0]

Tests B31 and B32 use prototype building D to test skylight and display perimeter custom budget generation and to simultaneously test ACM overhang modeling.

The prototype has the following characteristics:

- Prototype building D
- Retail (85%) and storage (15%) occupancies hence lighting at 2.00 watts per square foot for the retail and 0.6 watts per square foot for the commercial storage portion at the back.
- 3.5 inch concrete slab-on-grade floor [U-F CONS=SLABC]
- At zero building azimuth the long axis of the building zones run due east to west.
- All "exterior" vertical walls of the two unconditioned zones are 2x4 steel-framed walls with framing 16" o.c. and R-11 insulation between framing members. These walls have stucco and plywood on the exterior and sheetrock on the interior [CONS = ~~METALOC~~IV11-A2].

- The vertical walls between the conditioned zone and the two unconditioned zones are 2x4 steel-framed walls with framing 16" o.c. and R-11 insulation between framing members. These walls have sheetrock on both sides [CONS = INTWALL].
- The southern exterior vertical wall of the conditioned zone is a steel-framed ~~W1A~~IV11-A2 [METAL-WALL] wall and the northern wall is a massive [HEAVY-WALL] ~~W4A~~IV13-D5+IV19~~14~~-A1 wall.
- Wood framed roof - framing materials and layers type RF1C
- For the B31 and B32 test runs the window wall ratio is .50 for both exterior walls of the conditioned space [WWR = 0.50]. These windows start on the ground.
- The B31 and B32 test runs both include double pane skylights.
- Clear single pane glass for all glass with 9% aluminum framing with thermal break, SHGC=0.82, G-C=1.62, and VT=0.88.
- Package single zone system with economizer cycle and compressor lockout (non-integrated economizer [ECONO-LIMIT-T = 75]

Vary Window Wall Ratio - B1 Series (5 tests)

These tests exercise the automatic determination of standard design window wall ratios. These tests are performed using building B. The first three (B11, B12, and B13) are modeled in climate zone 13 and the last two in climate zones 06 and 16 respectively. Wall types ~~W1A~~IV11-A2, ~~W2A~~IV9-A2, ~~W3A~~IV13-B2+IV19~~14~~-F7, and ~~W4A~~IV13-D5+IV19~~14~~-A1 are used as in test series A2. All glazing performance characteristics shall be consistent with the prescriptive standards and no overhangs or side fins will be simulated. The glass will be a continuous band of uniform height around the entire building. Window wall ratios are set at 0.35, 0.40, and 0.45 respectively. The building with a WWR of 0.45 are also simulated in climate zones 06 and 16 for tests B14 and B15. When the window wall ratio is tested at 0.45 [WWR = 0.45] the proposed building is tested with clear low emissivity dual pane glass with 9% aluminum framing with thermal break, SHGC=0.58, G-C=0.68, and VT=0.72.

Tests: B11B13, B12B13, B13B13, B14B06, and B15B16.

Vary Glazing Types With An Overhang - B2 Series (4 tests)

These tests examine the ACM's sensitivity to the energy tradeoffs between extra glazing and overhangs. The first three tests are performed using building B in climate zone 12 with the building rotated 15 degrees to the east in azimuth. The last test is performed in climate zone 03. A retail occupancy is modeled. Overhangs, six ~~feet~~ft deep [OH-D=6], 60 ~~feet~~ft wide [OH-W=60], and 0.1 ~~foot~~ft above the top of the glass [OH-B=0.1] and no extension [OH-A=0] are modeled on the windows. However, no side fins or other building shading will be simulated. The glass will consist of two continuous bands with their bottom edges 2.5 ~~feet~~ft from the floor and a height equivalent to a window wall ratio of 0.42 [WWR =0.42] around the entire building. The first three runs will use the three different glass types indicated below for windows on all walls including the north wall. Clear low emissive dual pane glass [9% aluminum framing with thermal break, SHGC=0.58, G-C=0.68, and VT=0.72] will also be simulated in climate zone 03.

Tests: B21B12, B22B12, B23B12, and B24B03

Display Perimeter & Skylight Tests - B3 Series (2 tests)

These tests examine the ACM's sensitivity to variations in both display perimeter and skylights. These tests are performed using prototype D in climate zone 12. A 4 ~~foot~~ft deep, [OH-D=4], 20 ~~foot~~ft wide [OH-W=20] overhang, 2 ~~feet~~ft above the window [OH-B=2] with no extension [OH-A=0] will be modeled. The building will be rotated 165 degrees clockwise or to the east [BUILDING LOCATION AZ = 165] facing the glazed wall 15 degrees to the east of due South. No side fins or other building shading will be simulated. The glass will be a 6 ~~foot~~ft high panel of clear single pane glass [9% aluminum framing with thermal break, SHGC=0.82, G-C=1.62, and VT=0.88] on both exterior end walls with its bottom edge at floor height. The display perimeter option will be selected with a display perimeter of 40 ~~feet~~ft for the D prototype building. [WWR = 0.500 for six foot high glass.] Test B31 will have 5%

of the roof area in double pane transparent skylights [9% aluminum framing with thermal break, SHGC=0.44, G-C=1.02, and VT=0.80] and test B32 will have 10% of the roof area in double pane translucent skylights [9% aluminum framing with thermal break, SHGC=0.70, G-C=1.02, and VT=0.61].

Tests: B31D12 and B32D12

5.2.4 Occupancy Tests

The occupancy tests check to see if the ACM applicant inserts the correct schedules, envelope performance requirements, fixed values for internal loads and ventilation rates as a function of the occupancy type. Window wall ratio has been lowered to 0.20 for building prototype A and 0.30 in prototype B to increase the sensitivity of the tests to the choice of occupancy.

The prototypes for these tests all have the following characteristics:

- Prototype building A
- Specified occupancy mixes except lighting at 0.05 watts per square foot higher than allowed by Table N2-2 with lighting plans submitted.
- Wood framed roof - framing materials and layers type RF1B
- Suspended wood floor - framing materials and layers per Joint Appendix IV~~similar to nonresidential manual~~, floor type IV24~~22~~-A1~~FX.0.2X6.16 with 10% 2x6 framing and no insulation. Note that the interior air film is 0.61 and thus the overall U-factor is 0.260.~~
- Package single zone system with economizer cycle and 75 degree Fahrenheit limit temperature
- [ECONO-LIMIT-T = 75.0]
- Window wall ratio = 0.20
- Glazing meets prescriptive standards for CZ13

Tests will also be run for a mixed office, retail, restaurant, and heated-only warehouse occupancies for prototype building B and a second mixed occupancy test will be done using prototype C as a "prototype" high-rise hotel.

- Prototype buildings B (ten zone version)
- Modeled occupancy mixes except lighting at 0.02 watts per square foot lower than allowed by Table N2-2 with lighting plans submitted.
- 3.5 inch concrete slab-on-grade floor [U-F CONS=SLABC]
- Wood framed roof - framing materials and layers type RF1C
- Two (Interior Zones and Perimeter Zones) Packaged Variable Air Volume Systems with Electric Reheat and Economizer Cycle and 75 degree Fahrenheit economizer limit temperature for Prototype B. [ECONO-LIMIT-T = 75.0]
- Window wall ratio = 0.30 [WWR = 0.35]
- Glazing performance equal to prescriptive requirements

Prototype building C is described in detail below by the reference program input files. The mixed-occupancy high-rise hotel has a hotel lobby, office, and three retail zones on the first floor; hotel guest rooms on the middle floors; and three hotel function area zones, a kitchen, and dining zone on the top floor. In addition to the primary occupancy, each perimeter HVAC zone has 12% of its area as corridor, restroom, and support occupancy. The interior or core HVAC zones have 20% of their area as corridor, restroom, and support occupancy to account for elevators and electrical and mechanical chases.

- Prototype building C
- Lighting is set to the prescriptive requirement for each occupancy task/area per Table N2-2.

- Concrete spandrel panel walls [MAT = (CC22,~~W1B~~IV11-A3~~-R13~~,GP02)]
- Raised concrete floor

  for Floor1 ~~[MAT = (CEL-2.5,CC03,CP01)]~~IV25~~23~~-A4

  for Floor2 ~~[MAT = (CEL-2.5,CC05,CP01)]~~

  where

  [CEL-2.5 = MAT TH=.2083 COND=.0333 DENS=5 S-H=.32]
- Plywood deck, rigid insulation w/built-up roof exterior roof [MAT = (BR01,ISO-3.0,PW04)

  where

  ISO-3.0=MAT TH=.25 COND=.01417 DENS=1.5 S-H=.38]

  Interior Roof [MAT = (CC04,CP01)
- Variable air volume system with hot water reheat and economizer cycle and 75 degree Fahrenheit economizer limit temperature serving non-hotel room occupancies

  [ECONO-LIMIT-T = 75.0]
- Four pipe fan coil system serving all hotel rooms
- Window wall ratio = 0.35 [WWR = 0.35]
- Glazing performance equal to prescriptive requirements for climate zone 13. Double pane clear windows [9% aluminum framing with thermal break, SHGC=0.77, G-C=0.838, and VT=0.80] are used for north-facing glazing and non-north-facing guestroom glazing. Double pane bronze windows [9% aluminum framing with thermal break, SHGC=0.50, G-C=0.838, and VT=0.47] are used for non-north-facing glazing for all other occupancies.

Single Occupancy Tests - C1 Series (5 tests)

These tests will be performed using the Building A in climate zone 10 for the 5 occupancy mixes listed below. Sub-occupancy assumptions are given in Table N2-~~2~~ 3 of this manual:

Grocery	82% Grocery Sales	8% Storage	6% Support	4% Office
Restaurant	65% Dining Area	30% Kitchen	5% Support	
Theater	70% Theater (Perf)	20% Lobby	5% Support	5% Office
Clinic	50% Medical-Clinic	25% Office	25% Support	
All "Other"	100% Other			

Tests: C11A10, C12A10, C13A10, C14A10, and C15A10

Mixed Occupancy Tests - C2 Series (2 tests)

a) This test will be performed using the ten zone version of Prototype Building B in climate zone 10 with the first story north and south zones retail, first story east and west zones heated-only warehouses and the first floor interior zone and all second story zones are office occupancies.

   Packaged single zone [PSZ] gas/electric HVAC systems are modeled in the heated-only warehouse zones in lieu of the packaged variable air volume [PVAV] system.

b) This test will be performed using the Prototype Building C in climate zone 16 with the first story having retail occupancies in all zones except for the west zone which is a hotel lobby and the south zone which is an office, four middle stories of hotel guest rooms with five zones per floor, and a top floor with hotel function

zones for the north, east, and west zones, a kitchen for the interior zone and dining occupancy in the south zone.

Tests: C21B10 and C22C16

5.2.5 Lighting Tests - D1 Series (4 tests)

The lighting tests check whether the ACM applicant inserts the correct lighting levels, per zone, into the standard design.

The prototype has the following characteristics:

- Prototype building D
- Retail area occupancy with lighting plans
- 3.5 inch concrete slab-on-grade floor [U-F CONS=SLABC]
- Wood framed roof - framing materials and layers type RF1C
- Window wall ratio of 0.30 [WWR = 0.30]
- Clear single pane glass for all glass with 9% aluminum framing with thermal break, SHGC=0.82, G-C=1.62, and VT=0.88.
- Package single zone system with economizer cycle and compressor lockout (non-integrated economizer [ECONO-LIMIT-T = 75]

These tests are performed using building D in climate zones 12 (Sacramento) and 07 (San Diego) with two different lighting levels, 1.50 watts per square foot and 1.70 watts per square foot.

Tests: D11D12, D12D12, D13D07, and D14D07

5.2.6 Ventilation Tests - E1 Series (6 tests)

The ventilation tests check whether the ACM applicant inserts the correct tailored ventilation rates, per zone, into the standard design. These tests are performed using Building D in climate zone 16 with three different combinations of tailored ventilation rates. Repeat these tests in climate zone 14.

The prototype has the following characteristics:

- One zone industrial and commercial storage occupancy with lighting plans showing 0.8 watts per square foot of lighting
- 3.5 inch slab on grade floor
- Wood framed roof - framing materials and layers [Roof Type RF1C]
- Window wall ratio of 0.10
- Clear double pane glazing on exterior walls with 9% aluminum framing with thermal break, SHGC=0.77, G-C=0.838, and VT=0.80.
- Package single zone system with no economizer

First, standard outside air per person [OA-CFM/PER] rates are used based on occupancy assumptions in Table N2-2~~1~~ or N2-3~~2~~. Next outside air per person [OA-CFM/PER] rates are increased by a factor of 1.5 as a tailored ventilation entry. Finally, outside air per person [OA-CFM/PER] rates are increased by a factor of three as a tailored ventilation entry.

Tests: E11D16, E12D16, E13D16, E14D14, E15D14, and E16D14

5.2.7 Process Loads Tests - E2 Series (6 tests)

The process loads tests check the energy budget effects of zonal process (tailored) equipment levels and microclimate sizing in a proposed building design. These tests are performed using prototype building B with conditioned interior zones in climate zone 16 (Tahoe City) with three different extra process loads of 0.50, 1.00, and 2.00 watts per square foot of process heat scheduled as equipment. Repeat these tests in climate zone 12 (Davis).

The prototype has the following characteristics:

- Prototype building B including 30'x30' interior zones
- Office occupancy
- 3.5 inch concrete slab-on-grade floor [U-F CONS=SLABC]
- Wood framed roof - framing materials and layers type ~~RF1C~~IV2~~3~~-A5
- Package variable air volume system with integrated economizer cycle and 75 degree Fahrenheit economizer limit temperature - [ECONO-LIMIT-T = 75.0]
- Window wall ~~eatio~~ ratio = 0.30 [WWR = 0.30]
- Single pane reflective glass with solar heat gain coefficient of 0.40 [9% aluminum framing with thermal break, G-C=1.62, and VT=0.22] everywhere.
- Lighting wattage at 1.20 watts per square foot

Tests: E21B16, E22B16, E23B16, E24B12, E25B12, and E26B12

5.2.8 HVAC System Tests - F1 Series (5 tests)

The HVAC system tests check the ACM's sensitivity to variations in HVAC system type and the selection of comparative systems for the standard design as a function of specific city location within climate zone, occupancy, square footage and proposed HVAC system type. Test F15A16 is a heated-only warehouse with electric resistance heating. The systems to be used for establishing custom budgets, are described in Chapter 2.

Tests 1 and 2 (F11A07 & F12A13):

- Prototype building A
- Medical office/clinic occupancy
- Window wall ratio of 40% [WWR = 0.40]
- Heat Pump System
- F11A07 modeled in climate zone 07 (San Diego)
- F12A13 modeled in climate zone 13 (Visalia)

Tests 3 and 4 (F13B12 & F14B12):

- Prototype building B - 8 zone version
- Retail occupancy
- Window wall ratio of 35% [WWR = 0.35]
- PVAV with electric reheat and no hot water coils or boilers
- F13B12 modeled in climate zone 12 (Sacramento)
- F14B12 modeled in climate zone 12 (Crockett)

Test 5: (F15A01)

- Prototype building A
- Heated only warehouse occupancy - gas-fired unit heater
- Modeled with clear, double pane, low emissivity glass, 9% aluminum framing with thermal break, SHGC=0.58, G-C=0.68, and VT=0.72.
- Window wall ratio of 35% [WWR = 0.35]
- Electric resistance heating - No cooling installed
- F15A01 modeled in climate zone 01 (Eureka)

Table N5-~~43~~ – F1 Test Series Summary

Test Run	HVAC System	Location	WWR	Occupancy
F11A07	Heat Pump	San Diego	0.40	Medical
F12A13	Heat Pump	Visalia	0.40	Medical
F13B12	PVAV with electric reheat	Sacramento	0.35	Retail
F14B12	PVAV with electric reheat	Crockett	0.35	Retail
F15A01	Electric resis. heating only	Eureka	0.35	Warehouse

5.2.9 System Sizing Tests - G1 Series (6 tests)

The system sizing tests check whether the ACM applicant calculates and simulates the correct capacities for both the proposed and standard design systems as a function of the input HVAC system capacities.

These tests are divided among undersized systems, oversized systems and combinations of oversized and undersized system components (e.g. oversized cooling and undersized zone reheating capacities). For the purposes of these tests OVERSIZED means 100 percent over estimated load and UNDERSIZED means 50 percent of the estimated load.

The system sizing tests will be performed in climate zones 3, 11, and 16. Tests 1,2,3 & 4 will be performed using building prototype A in climate zone 11 and tests 5 and 6 using the ten zone building prototype B in climate zones 03 and 16 respectively. Tests 5 and 6 will be performed using the ten HVAC zone version of prototype building B. Systems will be both undersized by 50% (tests 2 & 4) and oversized by 100% (tests 1 & 3.) Tests 5 and 6 have both undersized and oversized systems and components (boilers) serving different zones.

Tests 1 and 2 (G11A11 & G12A11):

- Prototype building A
- Medical office/clinic occupancy
- Window wall ratio of 40% [WWR = 0.40]
- Oversized (G11) and undersized (G12) PSZ - package gas/electric - system (gas furnace and DX cooling)
- Climate zone 11 (Red Bluff).
- No economizer

Tests 3 and 4 (G13A11 & G14A11):

- Prototype building A
- Medical office/clinic occupancy
- Window wall ratio of 40% [WWR = 0.40]
- Oversized (G13) and undersized (G14) heat pump system

- Climate zone 11 (Red Bluff).
- No economizer

Tests 5 and 6 (G15B03 & G16B16):

- Prototype building B - 10 zone version
- Office occupancy
- Window wall ratio of 35% [WWR = 0.35]
- Integrated economizers with 75 degree dry-bulb lockout
- For G15 - oversized boiler, undersized PVAV with electric reheat for exterior zones, oversized PVAV for interior zones
- For G15 climate zone 03 (San Francisco)
- For G16 - undersized boiler, oversized PVAV with electric reheat for exterior zones, undersized PVAV for interior zones
- For G16 - climate zone 16 (Tahoe City)

5.2.10 HVAC Distribution Efficiency Tests

ACM duct efficiency calculations shall be completed based on Appendix NG for the cases~~match the values~~ shown in Appendix NH.

5.3 Optional Capabilities Tests

ACMs may also model other optional capabilities or have optional compliance capabilities for additions and alterations. ~~In the last edition of this manual, tests for optional capabilities were left to be proposed by the vendor desiring to incorporate particular optional capabilities into their ACM. These tests were approved in conjunction with the approval of the ACM by the Commission. Most of the tests specified for optional calculation capabilities herein were originally proposed by the vendor of COMPLY24, Gabel-Dodd Associates. The tests for optional capabilities are based on the tests proposed by Gabel-Dodd Associates.~~

The first series of optional tests are special tests to test certain compliance options - partial compliance and modeling of an addition and an existing building with alterations. In addition to the test criteria for the energy results, compliance forms ~~must~~shall conform to the requirements for these special compliance options for the ACM to be approved.

The main body of optional capabilities tests deal with additional HVAC systems and plant capabilities that can be modeled by the DOE 2.1 (especially DOE 2.1E) computer program. These tests and the reference comparison method for these tests conform to the features and rules specified in Chapters 2 and 3 of this manual unless specifically noted otherwise.

5.3.1 OC Test Series - Compliance Options

Test OC1A09: Building prototype A - climate zone 09 - UCLA

Combined compliance for an altered existing building with a non-complying addition. Occupancy is an existing restaurant in a prototype A building. A new solarium is submitted as an addition to the restaurant. The solarium addition is 20 ~~feet~~ft deep by 30 ~~feet~~ft wide and is 12 ~~feet~~ft high adjacent to the wall of the existing building descends to 8 ~~feet~~ft at the outer glass wall of the addition. The addition has been added onto the eastern 30 ~~foot~~ft wide end of the A prototype building and that eastern wall and its glazing is removed with the construction of the addition. The vertical walls of the addition have 2.5 ~~foot~~ft knee walls with the rest of the walls consisting entirely of high performance glass:

- Knee walls - insulated spandrel panels

  SPANDREL-R10 assembly

- Sloped roof - insulated spandrel panels

  SPANDREL-R15 assembly

- Vertical glass walls

  GR4SC26 assembly [dual pane glass, 9% aluminum framing with thermal break, SHGC=0.26, G-C=0.2629, and VT=0.10]

- Sloped glazing in roof

  GR4SC18 assembly [dual pane glass, 9% aluminum framing with thermal break, SHGC=0.18, G-C=0.2629, and VT=0.08]

There is NO roof overhang extending beyond the addition's vertical walls. The original restaurant lighting of 2.00 watts per square foot has been altered to 1.60 watts per square foot to compensate for the extra glass in the solarium addition. The 30-~~foot~~ft wide eastern wall is removed to open the existing building to the solarium addition. The remainder of the A building prototype has exactly the same characteristics, including non-lighting occupancy assumptions, used in the proposed building for test C12A10 and is not altered for compliance. To be approved for the capability of partial compliance all ACM output and reporting requirements ~~MUST~~SHALL be met.

5.3.2 O1 Test Series - Fan Powered VAV Boxes

These tests use the ten zone version of the B building prototype with the same features used (except as noted) in test B11B13. All rules applicable to System #4 (Built-up VAV) described in Section 2.5 Required Systems and Plant Capabilities also apply to fan-powered VAV boxes or power induction units [PIU]. In particular, the rules used to determine a standard HVAC system are the rules for System #4.

Test O11B13: Building prototype B - climate zone 02 - Napa

Central VAV with hot water reheat. Each perimeter zone has a 600 cfm parallel fan powered VAV box. The reference method does not use the [ZONE-FAN-CFM] input, but does set [TERMINAL-TYPE = PARALLEL-PIU], [ZONE-FAN-KW is set greater than or equal to 0.00033], the [ZONE-FAN-T-SCH] is set 1 ^{o}F above heating setpoints, [MIN-CFM-RATIO = 0.3], and ACM input for the [ZONE-FAN-RATIO] or its equivalent is restricted to the range of 0.4 to 1.00. The ACM ~~must~~shall automatically determine or the ACM user ~~must~~shall enter an [INDUCED-AIR-ZONE] which is different than the zone served. For the reference program and method, the [INDUCED-AIR-ZONE] ~~must~~shall be the U-name (user name) of another zone.

Test O12B13: Building prototype B - climate zone 02 - Napa

Central VAV with hot water reheat. Each perimeter zone has a 600 cfm series fan powered VAV Box. The reference method does not use the [ZONE-FAN-CFM] input, but does set [TERMINAL-TYPE = SERIES-PIU], [ZONE-FAN-KW is set greater than or equal to 0.00033], the [ZONE-FAN-T-SCH] is set 1 ^{o}F above heating setpoints, [MIN-CFM-RATIO = 0.3], and ACM input for the [ZONE-FAN-RATIO] or its equivalent is restricted to the range of 0.4 to 1.00. The ACM ~~must~~shall automatically determine or the ACM user ~~must~~shall enter an [INDUCED-AIR-ZONE] which is different than the zone served. For the reference program and method, the [INDUCED-AIR-ZONE] ~~must~~shall be the U-name (user name) of another zone.

5.3.3 O2 Test Series - Supply/Return Fan Options

This series tests various fan options for central VAV system fans. These tests use the ten zone version of the B building prototype with the same features used (except as noted) in test B11B13. All runs have a central VAV HAVC system with a gas-fired boiler to supply hot water reheat.

Test O21B13: Building prototype B - climate zone 13 - Fresno

The supply fan uses an air foil fan with inlet vane control to control fan volume. The fan part-load curve is taken from the Commission's *DOE-2 Compliance Supplement*.

Test O22B13: Building prototype B - climate zone 13 - Fresno

The supply fan uses an air foil fan with discharge damper control to control fan volume. The fan part-load curve is taken from the Commission's *DOE-2 Compliance Supplement*.

Test O23B13: Building prototype B - climate zone 13 - Fresno

The supply fan uses an forward curve fan with inlet vane control to control fan volume. The fan part-load curve is taken from the Commission's *DOE-2 Compliance Supplement*.

Test O24B13: Building prototype B - climate zone 13 - Fresno

The supply fan uses a vane axial fan control to control fan volume. The fan part-load curve is taken from the Commission's *DOE-2 Compliance Supplement*.

5.3.4 O3 Test Series - Special Economizer Options

This series tests various economizer options. These tests use the A building prototype with the same features used (except as noted) in Test C11A10. All runs have a packaged single zone HVAC system with a gas-fired furnace and electric DX cooling. The building uses a grocery occupancy mix contained within a single (one thermostat) HVAC zone.

Proposed plans specify the sub-occupancies within the single HVAC zone with lighting watts per square foot:

Subzone Space Occupancy	Percentage of Area	Proposed Lighting
Grocery Sales Area	82%	1.50
Grocery Storage (Commercial Storage)	8%	0.80
Support/Corridors	6%	0.80
Office	4%	1.80

Test O31A12: Building prototype A - climate zone 12 - Fairfield

The HVAC system is equipped a fixed enthalpy integrated economizer control for more efficient cooling. The DOE 2.1E economizer function is used with [OA-CONTROL = TEMP], [ECONO-LIMIT-T = 75], [ENTHALPY-LIMIT = 25.0 Btu/lb], and [ECONO-LOCKOUT = YES].

Test O32A12: Building prototype A - climate zone 12 - Fairfield

The HVAC system is equipped a fixed enthalpy non-integrated economizer control for more efficient cooling. The DOE 2.1E economizer function is used with [ENTHALPY-LIMIT = 25.0 Btu/lb] and [ECONO-LOCKOUT = NO].

Test O33A12: Building prototype A - climate zone 12 - Fairfield

The HVAC system is equipped a differential enthalpy integrated economizer control for more efficient cooling. The DOE 2.1E economizer function is used with [OA-CONTROL = ENTHALPY].

5.3.5 O4 Test Series - Special HVAC Control Option

Test O41B13: Building prototype B - climate zone 13 - Fresno

This test exercises a warmest zone cooling coil control option. This test uses the ten (10) zone version of building prototype B with the same features used (except as noted) in test B11B13.

5.3.6 O6 Test Series - Additional Chiller Options

This series tests various chiller options. These tests use the ten (10) zone B building prototype with the same features used (except as noted) in test F14B13. All runs have a central HVAC system with one of the new chiller options and a gas-fired boiler and use hot water reheat.

Test O61B12: Building prototype B - climate zone 12 - Roseville

The chiller for this test is a single stage absorption chiller modeled with an EIR = 0.004 and an HIR = 1.6.

Test O62B12: Building prototype B - climate zone 12 - Roseville

The chiller for this test is a two stage absorption chiller modeled with an EIR = 0.004 and an HIR = 1.0.

Test O63B12: Building prototype B - climate zone 12 - Roseville

The chiller for this test is a gas-fired absorption chiller modeled with an EIR = 0.0114 and an HIR = 1.0.

Test O64B12: Building prototype B - climate zone 12 - Roseville

The chiller for this test is a variable speed drive (VSD) chiller modeled with an EIR = 0.2275.

Test O65B12: Building prototype B - climate zone 12 - Roseville

The chiller for this test is a screw chiller modeled with an EIR = 0.2275.

Test O66B12: Building prototype B - climate zone 12 - Fairfield

The chiller for this test is also a screw chiller modeled with an EIR = 0.2275 in a different city in climate zone 12.

5.3.7 O7 Test Series - Additional HVAC System Options

This series tests various additional HVAC system options. These tests use the ten (10) zone B building prototype with the same features used (except as noted) in test F13B12. All runs have a central HVAC system with the same chiller as that used in test F13B12 and (where needed) a gas-fired boiler for hot water reheat.

Test O71B12: Building prototype B - climate zone 12 - Sacramento

Individual hydronic heat pumps (< 75K Btuh) are modeled for each zone. The heat pumps all have EER = 11.0 and COP = 3.8.5.3.8 O8 Test Series - Optional Shading Devices.

This test series tests the effects of optional shading devices, in particular sidefins. In this series sidefins are tested in two hot climate zones at both ends of the state to maximize differences in latitude and thus solar angles. The building is the same as that used in Test C11A10 except as noted below.

The occupancies and lighting are the same as that specified for **Test OC2A09** and the **O3 Test Series**.

Test O81A11: Building prototype A - climate zone 11 - Red Bluff

The glazing is the same as in Test C11A10 except that there are 2-~~foot~~ft deep sidefins every 5 ~~feet~~ft that are the same height as the windows.

Test O82A15: Building prototype A - climate zone 15 - Palm Springs

This test is the same as Test O81A11 except that the test is modeled in climate zone 15 - Palm Springs.

5.3.8 O9 Test Series - Evaporative Cooling Options

This test series tests direct, indirect, and direct/indirect evaporative cooling systems. Evaporative cooling is used both alone or as a precooling system. The building is the same as that used in Test C11A10 except as noted below. The occupancy type is the grocery with 12% storage space; and lighting (with lighting plans) is set at 1.65 watts per square foot for all spaces modeled.

Standard Design Assumptions. The standard HVAC system for evaporative cooling is a DOE 2.1E gas/electric packaged single zone unit [DOE 2.1E PSZ] with a fan power index 0.196 watts per cfm less than the proposed system which has additional fan capacity to move high air volumes required for evaporative cooling. The DOE 2.1E reference program characteristics for the standard system include [SUPPLY-DELTA-T = 1.815] and [SUPPLY-KW = 0.000587].

Proposed Design Assumptions. The proposed HVAC system for these O9 series tests will include the evaporative cooling system plus a backup DOE 2.1E packaged single zone [PSZ] with [SUPPLY-DELTA-T = 2.42] to account for additional heating of the air stream by additional and/or larger fans, [SUPPLY-KW = 0.000783] to account for the evaporative cooling fan. **ACMs may allow user entry of supplementary fan and pump power but they ~~must~~shall have a minimum supplementary power use (similar to the fan power index) of 0.5 watts per cfm to account for supplementary fans and pumps [EVAP-CL-KW not less than 0.0005 (DOE 2.1 Default)].** The entry for [EVAP-CL-KW] for DOE 2.1E is given:

Equation N5-1

$$[EVAP - CL - KW] = 0.746 \times \frac{(EF_{sp} + EP_{sp})}{0.85}$$

where

EF_{sp}	is the nameplate horsepower of the evaporative supplementary fan(s)
EP_{sp}	is the nameplate horsepower of the evaporative supplementary pump(s)
0.85	is a power factor to convert nameplate horsepower to brakehorsepower

For the proposed design, an ACM ~~must~~shall limit direct and indirect evaporative cooling effectiveness to the DOE 2.1E defaults as a maximum entry.

Test O91A13: Building prototype A - climate zone 13 - Fresno

A packaged single zone system is modeled with supplemental indirect evaporative cooling. This test is used to verify the proper upsizing of an undersized cooling system, as well as to ensure that the evaporative cooling is not upsized. This test is also used to verify the correct accounting of supplemental energy associated with the evaporative cooling process, and the implementation of the indirect cooling algorithms.

Test O92A11: Building prototype A - climate zone 11 - Redding

A standalone indirect/direct evaporative cooler is modeled with no supplemental air conditioning proposed. This test is used to verify the correct selection of the standard HVAC system and the ability of the ACM to create the proper cooling system which functions with the evaporative cooling system as a supplement to mechanical cooling. This test is also used to verify the correct implementation of the indirect/direct evaporative cooling algorithms.

Test O93A12: Building prototype A - climate zone 12 - Roseville

A standalone indirect/direct evaporative cooler is modeled with no supplemental air conditioning proposed. This test is the same as Test 092A11 except modeled in a different city with a milder cooling climate where the evaporative cooler alone may be sufficient. This test is used to verify the correct selection of the standard HVAC system and the ability of the ACM to determine the need for the proper cooling system which functions with the evaporative cooling system as a supplement to mechanical cooling and create it if needed.

Test O94A13: Building prototype A - climate zone 13 - Fresno

A standalone indirect/direct evaporative cooler is modeled with no supplemental air conditioning proposed. This test is the same as Test 092A11 except modeled in a different city with a milder cooling climate where the evaporative cooler alone may be sufficient. This test is used to verify the correct selection of the standard HVAC system and the ability of the ACM to determine the need for the proper cooling system which functions with the evaporative cooling system as a supplement to mechanical cooling and create it if needed.

6. Vendor Requirements

Each ACM vendor ~~must~~shall meet all of the following requirements as part of the ACM approval process and as part of an ongoing commitment to users of their particular program.

6.1 Availability to Commission

All ACM vendors are required to submit at least one fully working program version of the ACM to the California Energy Commission. An updated copy or access to the approved version of the ACM ~~must~~shall be kept by the Commission to maintain approval for compliance use of the ACM.

The Commission agrees not to duplicate the ACM except for the purpose of analyzing it, for verifying building compliance with the ACM, or to verify that only approved versions of the ACM are used for compliance.

6.2 Building Department Support

ACM vendors ~~must~~shall provide a copy of the ACM User's Manual and Help System ~~ACM Compliance Supplement (or ACM Compliance User's Manual)~~ to all local building enforcement agencies who request one in writing.

6.3 User Support

ACM vendors ~~must~~shall offer support to their users with regard to the use of the ACM for compliance purposes. Vendors may charge a fee for user support.

6.4 ACM Vendor Demonstration

The Commission may request ACM vendors to physically demonstrate their program's capabilities. One or more demonstrations may be requested before approval is granted.

7. Duct Efficiency Improvements Including HERS Required Field Verification And Diagnostic Testing for Duct Sealing~~Non-Residential Duct Installation Verification And Diagnostic Testing Using Home Energy Rating Systems (HERS)~~

7.1 Duct Efficiency Improvements ~~Verified~~

The Commission has approved algorithms and procedures for determining ~~duct and~~ HVAC air distribution system (duct) efficiency for non-residential single-zone ~~individual~~ packaged equipment units serving ~~(~~5000 ft^2 or less via ductwork that is installed in buffer spaces or unconditioned areas.~~in the space between an insulated ceiling and the roof)~~. Details of the energy efficiency calculations are presented in Appendix N~~G~~.

Section 144(k) of the Standards sets a prescriptive requirement for HERS rater diagnostically tested and field verified duct sealing for duct systems that meet the following criteria (note this is a subset of the duct systems for which the ACM calculations shall be applied):

1. Connected to constant volume, single zone, air conditioners, heat pumps or furnaces, and
2. Serving less than 5,000 square feet of floor area; and
3. Having more than 25% duct surface area located in one or more of the following spaces:
   - A. Outdoors, or
   - B. In a space directly under a roof where the U-factor of the roof is greater than the U-factor of the ceiling, or
   - C. In a space directly under a roof with fixed vents or openings to the outside or unconditioned spaces, or
   - D. In an unconditioned crawlspace; or
   - E. In other unconditioned spaces.

This requirement applies to new buildings and to additions. Section 149(b)1.D sets a requirement for HERS rater diagnostically tested and field verified duct sealing for alterations of existing buildings where a new duct system is being installed or an existing duct system is being replaced for duct systems meeting the same criteria. Section 149(b)1.E sets a requirement for HERS rater diagnostically tested and field verified duct sealing for existing duct systems in duct systems meeting the same criteria when the space conditioning system is being installed or replaced, including replacement or installation of an air handler, cooling or heating coil, or furnace heat exchanger. Section 124 sets a mandatory minimum duct insulation requirement of R-8 for duct systems meeting the same criteria.

There are two calculation procedures to determine HVAC system air distribution (duct) ~~seasonal air distribution~~ efficiency using either: 1) default input assumptions, or 2) values based on HERS rater diagnostic testing and field verification. Duct ~~measurement values. Air distribution~~ efficiencies for heating and cooling shall be calculated separately. The ACM shall require the user to choose values for the following parameters to calculate ~~seasonal~~ duct efficiencies: duct insulation level and duct leakage level.

For duct systems in new buildings and additions meeting the section 144(k) criteria, the~~The~~ ACM shall assume R-8 duct insulation and duct leakage of 8% of fan flow ~~use the defaults shown in [brackets]~~ for the standard

design. For ~~and for~~ the proposed design the same R-8 duct insulation value shall be used since that is a mandatory requirement. When the documentation author specifies duct sealing, which requires HERS rater field verification and diagnostic testing, the proposed design for duct leakage shall be the same as the standard design. If the documentation does not specify duct sealing, the proposed design shall be the default value for duct leakage of 36% of fan flow.

For new or replacement duct systems in existing buildings meeting the Section 144(k) criteria, the ACM shall assume R-8 duct insulation for the new or replaced ducts, and if the new or replaced ducts make up only a portion of the duct system, the ACM shall assume R-4.2 duct insulation for the existing ducts. The proposed design shall use the same R-8 duct insulation for the new or replaced ducts and the actual installed duct insulation for the existing ducts. The ACM shall assume duct leakage of 17% of fan flow for the standard design for new or replacement duct systems, including existing portions of the duct system. When the documentation author specifies duct sealing meeting the requirements of Section 149(b)1.D, including HERS rater field verification and diagnostic testing, the proposed design for duct leakage shall be the same as the standard design. If the documentation does not specify duct sealing, the proposed design shall be the default value of duct leakage of 36% of fan flow.

For existing duct systems in existing buildings meeting the Section 144(k) criteria, the ACM shall assume R-4.2 duct insulation and duct leakage of 17% of fan flow. The proposed design shall assume either R-4.2 duct insulation or the actual installed duct insulation. The ACM shall assume duct leakage of 17% of fan flow for the standard design for new or replacement duct systems, including existing portions of the duct system. When the documentation author specifies duct sealing meeting the requirements of Section 149(b)1.E, including HERS rater field verification and diagnostic testing, the proposed design for duct leakage shall be the same as the standard design. If the documentation does not specify duct sealing, the proposed design shall be the default value for duct leakage of 36% of fan flow.

For duct systems for single-zone individual packaged equipment serving 5000 ft^2 or less via ductwork that is installed in spaces that are not directly conditioned, which do not meet the Section 144(k) criteria, the ACM shall assume R4.2 duct insulation for the standard design. The proposed design shall assume either R4.2 or the actual installed duct insulation. The ACM shall assume the default value for duct leakage of 36% of fan flow. When the documentation author specifies duct sealing, including HERS rater field verification and diagnostic testing, the proposed design shall assume duct leakage of 8% of fan flow for duct systems in new buildings and additions meeting the duct leakage requirements of Section 144(k), and duct leakage of 17% for duct systems in existing buildings meeting the duct leakage requirements of Sections 149(b)1.D or 149(b)1.E. ~~when the user does not enter a specific value for these parameters:~~

~~Insulation level of ducts [R 4.2]~~

~~The leakage level of the duct system [22% of fan flow]. Two values are possible: the default or 8% of fan flow if measured and verified at no more than 6% of fan flow.~~

The ACM shall automatically determine whether duct systems are for single-zone individual packaged equipment serving 5000 ft^2 or less via ductwork that is installed in spaces that are not directly conditioned, and whether such duct systems meet the criteria of Section 144(k). This determination shall be made based on inputs required for analyzing other HVAC features or inputs created especially to make this determination. ~~When any duct efficiency credit is claimed beyond the default assumptions that requires diagnostic testing or verification by a HERS rater or the local enforcement agency, i.e. when non-default values (except HVAC equipment capacities) are used to determine duct efficiency, the leaks in the air distribution system connections shall not be sealed with cloth back rubber adhesive duct tapes unless such tape is used in combination with mastic and drawbands and this requirement must be specified as required by the Nonresidential Manual.~~ The ACM shall automatically use the following values from the description of the proposed design when calculating the distribution system (duct) ~~distribution system~~ efficiency:

- Number of stories
- Building Conditioned Floor Area
- Building Volume

- Outdoor summer and winter design temperatures for each climate zone

When more than one HVAC system serves the building, the HVAC distribution efficiency is determined for each system and ~~a conditioned floor area-weighted average seasonal efficiency is determined based on the inputs for~~ is applied to the energy consumption of each ~~of the~~ system~~s~~.

Duct sealing shall be listed as *HERS Verification Required* features on the *Performance Certificate of Compliance* (PERF-1) and the *Mechanical Compliance Summary* (MECH-1), and *Mechanical Distribution Summary* (MECH-5). Field verification and diagnostic testing constitutes "eligibility and installation criteria" for duct sealing. Field verification and diagnostic testing of duct sealing shall be described in the *Compliance Supplement*.

~~When an existing HVAC system is extended to serve an addition, the default assumptions for duct and HVAC distribution efficiency must be used for both the *Proposed Design* and the *Standard Design*. However, when a new, high efficiency HVAC distribution system is used to serve the addition or the addition and the existing building, that system may be modeled to receive energy credit subject to diagnostic testing and verification of proper installation by a HERS rater.~~

7.2 California Home Energy Rating Systems

Compliance credit for duct sealing for HVAC systems covered by sections 144(k), 149(b)1.D and 149(b)1.E of the Standards requires field verification and diagnostic testing of as-constructed duct systems by a certified HERS rater, using the testing procedures in Appendix NG. The Commission approves HERS providers, subject to the Commission's HERS Program regulations, which ~~is required to regulate home energy rating system (HERS) providers in California. These regulations~~ appear in the California Code of Regulations, Title 20, Chapter 4, Article 8, Sections 1670-1676). Approved HERS providers are authorized to certify HERS raters and maintain quality control over field verification and diagnostic testing. ~~ratings. Ratings are based on visual inspection and diagnostic testing of the physical characteristics and energy efficiency features of buildings, as constructed.~~

When ~~compliance documentation~~User's Manual and Help System indicates field verification and diagnostic testing of specific energy efficiency improvements as a condition for those improvements to qualify for Title 24 compliance credit, an approved HERS provider and certified HERS rater shall be used to conduct the field verification and diagnostic testing. HERS providers and raters shall be considered special inspectors by building departments, and shall demonstrate competence, to the satisfaction of the building official, for the field verifications ~~visual inspections~~ and diagnostic testing. The HERS provider and rater shall be independent entities from the builder or subcontractor installer of the energy efficiency improvements being tested and verified, and shall have no financial interest in the installation of the improvements. Third-party quality control programs approved by the Commission may serve the function of HERS raters for field verification and diagnostic testing purposes as specified in Section 7.6~~7~~.

7.3 Summary of Documentation and Communication

The documentation and communication process for duct sealing field verification and diagnostic testing is summarized below. The subsequent sections of this chapter contain additional information.

- The documentation author and the principal mechanical designer shall complete the compliance documents, including the MECH-1 for the building.
- The documentation author or the principal mechanical designer shall provide a signed Certificate of Compliance (MECH-1) to the builder, which indicates that duct sealing with HERS rater diagnostic testing and field verification is required for compliance. ~~The documentation author or principal mechanical designer shall notify the HERS provider by phone, fax or email of the name of the builder, the street address or subdivision and lot number of the dwelling, and the measure(s) that require diagnostic testing and field verification. The documentation author shall certify on the MECH-1 that this notification has been completed. The building department shall determine that this has taken place before accepting the MECH-1.~~The builder or principal mechanical designer shall make arrangements for the services of a certified HERS rater prior to

installation of the duct system, so that once the installation is complete the HERS rater has ample time to complete the field verification and diagnostic testing without delaying final approval of occupancy by the building department.

- The builder's subcontractor installs the duct systems which require field verification and diagnostic testing, as specified by Section 7.1. The builder or builder's installer shall complete diagnostic testing and the procedures specified in Section 7.5. When the installation is complete, the builder or the builder's subcontractor shall complete the installer's portion of the MECH-5, Mechanical Distribution Summary, and keep it at the building site for review by the building department. The builder also shall provide a copy of the completed installer's portion of the MECH-5 to the HERS rater.
- The HERS rater shall complete the field verification and diagnostic testing as specified in Section 7.1, completes the HERS rater's portion of the MECH-5, and provides a signed MECH-5 to the HERS provider, builder and building department. The building department shall not approve a building with ~~dwelling~~ individual single zone package space conditioning equipment unit for occupancy until the building department has received a MECH-5 that has been signed by the certified HERS rater.

~~• 7.3 HERS Required Verification and Diagnostic Testing~~

~~HERS diagnostic testing and field verification is required for:~~

~~duct air sealing~~

~~augmented duct insulation~~

~~These features shall be listed as *HERS Verification Required* features on the *Performance Certificate of Compliance* (PERF-1) and the *Mechanical Compliance Summary* (MECH-1), and *Mechanical Distribution Summary* (*Certificate of Field Verification and Diagnostic Testing* (MECH-5)). Such verification constitutes "eligibility and installation criteria" for these features. Field verified and diagnostically tested features must be described in the *Compliance Supplement*.~~

~~7.4 HERS Provider Notification~~

~~When the documentation author or principal mechanical designer provides a signed MECH-1 to the builder, which indicates that duct sealing, including HERS diagnostic testing and field verification is required for compliance, the documentation author or principal mechanical designer shall notify the HERS provider by phone, FAX or email of the name of the builder, the street address or other identifier for the building, and the measure(s) that require diagnostic testing and field verification. The documentation author shall certify on the MECH-1 that this notification has been completed. The building department shall determine that this notification has taken place before accepting the MECH-1. The builder shall make arrangements for the services of a certified HERS rater prior to installation of the measures, so that once the installation is complete the HERS rater has ample time to complete the field verification and diagnostic testing without delaying final approval of occupancy by the building department.~~

~~7.5~~7.4 Installation Certification

When compliance includes duct sealing, builder employees or subcontractors shall~~:~~ complete diagnostic testing, and certify on the installer's portion of the ~~*Certificate of Field Verification and Diagnostic Testing*~~ (MECH-5) the diagnostic test results and that the work meets the requirements for compliance credit.

~~When compliance credit has been claimed for duct insulation levels beyond those covered by default assumptions, builder employees or subcontractors shall record on the *Certificate of Field Verification and Diagnostic Testing* (MECH-5) the R-values for supply and return ducts.~~

Installer certifications are required for each and every building, and for every single zone package space conditioning equipment unit in the building that requires duct sealing with HERS rater field verification and diagnostic testing, if more than one such space conditioning equipment unit is installed in the building.

~~7.6~~7.5 Field Verification and Diagnostic Testing Procedures

At the builder's option, HERS field verification and diagnostic testing shall be completed either for each single zone package space conditioning equipment unit in the building or for a sample of all of the units that are installed in the building. Field verification and diagnostic testing for compliance credit for duct sealing shall use the diagnostic duct leakage from fan pressurization of ducts in ACM Appendix NG.

The builder shall provide the HERS provider a copy of the MECH-5 containing the installer certifications required in Section 7.5. Prior to completing field verification and diagnostic testing, the HERS rater shall first verify that the installation certifications have been completed.

If the builder chooses the sampling option, the procedures described in this section shall be followed. Sampling procedures described in this section shall be included in the *Compliance Supplement*.

~~7.6.1~~7.5.1 Initial Field Verification and Testing

The HERS rater shall diagnostically test and field verify the first individual single zone package space conditioning equipment unit of each building. This initial testing allows the builder to identify and correct any potential duct installation and sealing flaws or practices before other units are installed. If field verification and diagnostic testing determine that the requirements for compliance are met, the HERS rater shall provide a signed and dated MECH-5 to the builder, the HERS provider, and the building department.

~~7.6.2~~7.5.2 Sample Field Verification and Testing

After the initial testing is completed, the builder shall identify a group of up to seven individual single zone package space conditioning equipment units in the building from which a sample will be selected for testing, and notify the HERS provider.

The builder may remove units from the group by notifying the HERS provider. Removed units which are installed shall either be field verified and diagnostically tested individually or shall be included in a subsequent group for sampling.

The HERS rater shall select a minimum of one unit out of the group for diagnostic testing and field verification. When several units are ready for testing at the same time, the HERS rater shall randomly select the unit to be tested. The HERS rater shall diagnostically test and field verify the unit selected by the HERS rater.

If field verification and diagnostic testing determines that the requirements for compliance are met, the HERS rater shall provide a signed and dated MECH-5 to the builder, the HERS provider, and the building department. The MECH-5 shall report the successful diagnostic testing results and conclusions regarding compliance for the tested unit. The HERS rater shall also provide a signed and dated MECH-5 to the builder, the HERS provider, and the building department for up to six additional units in the group. The MECH-5 shall not be provided for units that have not yet been installed and sealed.

Whenever the builder changes subcontractors who are responsible for installation of the space conditioning equipment units, the builder shall notify the HERS rater of any subcontractors who have changed, and terminate sampling for the identified group. All units requiring HERS rater field verification and diagnostic testing for compliance that were installed by previous subcontractors or were subject to field verification and diagnostic testing under the supervision of a previous HERS provider, for which the builder does not have a completed MECH-1, shall either be individually tested or included in a separate group for sampling. Individual single zone package space conditioning equipment units that are subject to the requirements of Section 144(k) with installations completed by new subcontractors shall either be individually tested or shall be included in a new sampling group following a new *Initial Field Verification and Testing*.

The HERS rater shall not notify the builder when sample testing will occur prior to the completion of the work that is to be tested. After the HERS rater notifies the builder when testing will occur, the builder shall not do additional work on the features being tested.

~~7.6.3~~7.5.3 Re-sampling, Full Testing and Corrective Action

When a failure is encountered during sample testing, the HERS rater shall conduct re-sampling to assess whether that failure is unique or the rest of the units are likely to have similar failings. The HERS rater shall select for re-sampling one of the up to six untested units in the group.

If testing in the units in the re-sample confirms that the requirements for compliance credit are met, then the unit with the failure shall not be considered an indication of failure in the other units in the group. The HERS rater shall provide a signed and dated MECH-5 to the builder, the HERS provider, and the building department for up to six additional units in the group, including the unit in the re-sample. The builder shall take corrective action for the unit with the failure, and then the HERS rater shall retest that unit to verify compliance and issue a signed and dated to the builder.

If field verification and testing in the re-sample results in a second failure, the builder shall take corrective action in all space conditioning units in the group that have not been tested. In cases where corrective action would require destruction of building components, the builder may choose to reanalyze compliance and choose different measures that will achieve compliance. In this case a new Certificate of Compliance (MEC-1) shall be completed and submitted to the HERS provider, HERS rater and building department. The HERS rater shall conduct field verification and diagnostic testing for each of these space conditioning units to verify that problems have been corrected and that the requirements for compliance have been met, and shall report to the HERS provider, the builder, and the building department.

The HERS provider shall file a report with the building department explaining all action taken (including field verification, testing, and corrective action,) to bring into compliance units for which full testing has been required. If corrective action requires work not specifically exempted by Section 112 of the CMC or Section 106 of the CBC, the builder shall obtain a permit from the building department prior to commencement of any of the work.

If additional units in the group are completed during the time required to correct, field verify and test the previously installed units in the group, the rater shall individually field verify and diagnostically test those additional units to confirm that the requirements for compliance credit are met.

Corrections shall not be made to a sampled or re-sampled unit to avoid a failure. If corrections are made to a sampled or re-sampled unit to avoid a failure, corrections, field verification and testing shall be performed on 100% of the ~~dwelling~~ individual single zone package space conditioning equipment units in the group.

~~7.7~~7.6 Third Party Quality Control Programs

The Commission may approve third-party quality control programs that serve the function of HERS raters for diagnostic testing and field verification purposes. The third-party quality control program shall provide training to installers regarding compliance requirements for measures for which diagnostic testing and field verification is required. The third-party quality control program shall collect data from participating installers for each installation completed for compliance credit, complete data checking analysis to evaluate the validity and accuracy of the data to independently determine whether compliance has been achieved, provide direction to the installer to retest and correct problems when data checking determines that compliance has not been achieved, require resubmission of data when retesting and correction is directed, and maintain a database of all data submitted by installers in a format that is acceptable to the Commission and available to the Commission upon request. The data that is collected by the third-party quality control program shall be more detailed than the data required for showing compliance with the Standards, shall provide an independent check on the validity and accuracy of the installer's claim that compliance has been achieved, and shall not be alterable by the installer to indicate that compliance has been achieved when in fact compliance has not been achieved.

The third-party quality control program shall also obtain the services of a HERS rater to conduct independent field verifications, completing all of the responsibilities of a HERS rater as specified in this chapter with the exception that sampling shall be completed for a group of up to thirty space conditioning units with a minimum sample of one out of every 30 sequentially completed units from the group. The HERS rater shall be an independent entity from the third-party quality control program. Re-sampling, full testing and corrective action shall be completed as

specified in Section 7.5~~6~~.3 with the exception that re-sampling shall be completed for a minimum of one out of every 30 units from the group.

The third-party quality control program shall meet all of the requirements of a HERS rater specified in the Commission's HERS Program regulations (California Code of Regulations, Title 20, Division 2, Chapter 4, Article 8, Sections 1670 -1675), including the requirement to be an independent entity from the builder and the HERS rater that provides independent field verifications, subcontractor installer as specified by Section 1673(i). A third-party quality control program may have business relationships with installers participating in the program to advocate or promote the program and an installer's participation in the program, and to advocate or promote products that the third-party quality control program sells to installers as part of the program.

Prior to approval by the Commission, the third-party quality control program shall provide a detailed explanation to the Commission of 1) the data that is to be collected from the installers, 2) the data checking process that will be used to evaluate the validity and accuracy of the data, 3) the justification for why this data checking process will provide strong assurance that the installation actually complies, and 4) the format for the database that will be maintained and provided to the Commission upon request. The third-party quality control program may apply for a confidential designation of this information as specified in the Commission's Administrative Regulations (California Code of Regulations, Title 20, Division 2, Chapter 7, Article 2, Section 2505). The third-party quality control program shall also provide a detailed explanation of the training that will be provided to installers, and the procedures that it will follow to complete independent field verifications.

The third-party quality control program shall be considered for approval as part of the rating system of a HERS provider, which is certified as specified in the Commission's HERS Program regulations, Section 1674. A third-party quality control program can be added to the rating system through the re-certification of a certified HERS provider as specified by Section 1674(d).

~~7.8~~7.7 Sampling for Additions or Alterations

When compliance for an addition or alteration requires diagnostic testing and field verification, the building permit applicant may choose for the testing and field verification to be completed for the permitted space alone or as part of a sample of space conditioning units for which the same installing company has completed work that requires testing and field verification for compliance. The building permit applicant shall complete the applicable portions of a MECH-1~~and shall complete the HERS Provider Notification as specified in section 7.4~~. The HERS provider shall define the group for sampling purposes as all units where the building permit applicant has chosen to have testing and field verification completed as part of a sample for the same installing company. The group shall be no larger than seven. The installing company may request a smaller group for sampling. Whenever the HERS rater for an installing company is changed, a new group shall be established. Initial field verification and testing shall be completed for the first unit in each group. Re-sampling, full testing and corrective action shall be completed if necessary as specified by Section 7.5~~6~~.3.

Field verification and diagnostic testing may be completed by an approved third-party quality control program as specified in Section 7.6~~7~~. The group for sampling purposes shall be no larger than 30 when a third-party quality control program is used. The third-party quality control program may define the group instead of the provider. When a third-party quality control program is used, the MECH-5 shall document that data checking has indicated that the unit complies. The building official may approve compliance based on the MECH-5 where data checking has indicated that the unit complies, on the condition that if sampling indicates that re-sampling, full testing, and corrective action is necessary, such work shall be completed.

~~7.9~~7.8 Summary of Responsibilities

This section summarizes responsibilities described previously in this chapter and organizes them by the responsible party.

~~7.9.1 Certificate of Compliance Documentation Author~~

~~When the Certificate of Compliance (MECH-1) indicates that duct sealing requiring HERS field verification and diagnostic testing measure is required for compliance, the documentation author or principal mechanical designer shall notify the HERS provider by phone, FAX or email and send a copy of the CF-1R to the HERS provider. The documentation author shall certify on the MECH-1 that this notification has been completed.~~

~~7.9.2~~7.8.1 Builder

The builder shall make arrangements for the services of a certified HERS rater prior to installation of the duct systems, so that once the installation is complete the HERS rater has ample time to complete the field verification and diagnostic testing without delaying final approval of occupancy by the building department.

Builder employees or subcontractors responsible for completing diagnostic testing, as specified in Section 7.5 shall certify the diagnostic testing results and that the work meets the requirements for compliance credit on the installer's portion of the MECH-5.

If the builder chooses to have HERS rater field verification and diagnostic testing completed through sampling, the builder shall identify for the HERS provider the group of space conditioning units to be included in the sample. The builder shall provide the HERS provider a copy of the MECH-5 with the installer's portion signed by the builder employees or sub-contractors, certifying that diagnostic testing and installation meet the requirements for compliance credit.

The builder shall provide a MECH-5 signed and dated by the HERS rater to the building official in conjunction with requests for final inspection for each individual single zone package space conditioning equipment unit.

~~7.9.3~~7.8.2 HERS Provider and Rater

The HERS provider shall maintain a list of the space conditioning units in the group from which sampling is drawn, the units selected for sampling, the units sampled and the results of the sampling, the units selected for re-sampling, the units that have been tested and verified as a result of re-sampling, the corrective action taken, and copies of all MECH-5 forms for a period of five years.

The HERS rater providing the diagnostic testing and verification shall sign and date a MECH-5 certifying that he/she has verified that the requirements for compliance credit have been met. A MECH-5 shall be provided for the tested space conditioning unit and each of up to six other units from the group for which compliance is verified based on the results of the sample. The HERS rater shall provide copies of the signed MECH-5 to the builder, the HERS provider, and the building department.

The HERS rater shall identify on the MECH-5 if the space conditioning unit has been tested or if it was an untested unit approved as part of sample testing. The HERS rater shall not sign a MECH-5 for a building with a space conditioning unit that does not have the installer's portion of the MECH-5 signed by the installer as required in Section 7.5.

If field verification and testing on a sampled space conditioning unit identifies a failure to meet the requirements for compliance credit, the HERS rater shall report to the HERS provider, the builder, and the building department that re-sampling will be required.

If re-sampling identifies another failure, the HERS rater shall report to the HERS provider, the builder, and the building department that corrective action and diagnostic testing and field verification will be required for all the untested space conditioning units in the group. This report shall identify each space conditioning unit that shall be fully tested and corrected.

The HERS provider shall also report to the builder once diagnostic testing and field verification has shown that the failures have been corrected for all of the space conditioning units.

When individual space conditioning unit testing and verification confirms that the requirements for compliance have been met, the HERS rater shall provide a signed and dated MECH-5 for each space conditioning unit in the group.

The HERS provider shall file a report with the building department explaining all action taken (including field verification, testing, and corrective actions) to bring into compliance space conditioning units for which full testing has been required.

~~7.9.4~~7.8.3 Third-Party Quality Control Program

An approved third-party quality control program shall:

- Provide training to installers regarding compliance requirements for measures for which diagnostic testing and field verification is required,
- Collect data from participating installers for each installation completed for compliance credit,
- Complete data checking analysis to evaluate the validity and accuracy of the data to independently determine whether compliance has been achieved,
- Provide direction to the installer to retest and correct problems when data checking determines that compliance has not been achieved,
- Require resubmission of data when retesting and correction is directed, and
- Maintain a database of all data submitted in a format that is acceptable to the Commission and available to the Commission upon request.

The third-party quality control program shall obtain the services of an independent HERS rater to conduct independent field verifications, completing all of the responsibilities of a HERS rater as specified in this Chapter with the exception that sampling shall be completed for a group of up to 30 space conditioning units, and sampling and re-sampling shall be completed for a minimum of one out of every 30 sequentially completed units from the group.

~~7.9.5~~7.8.4 Building Department

When the Certificate of Compliance (MECH-1) indicates duct sealing requiring HERS diagnostic testing and field verification for compliance, the building department shall verify that the Documentation Author has notified the HERS provider before accepting the MECH-1.

The building department at its discretion may require independent testing and field verification to be scheduled so that it can be completed in conjunction with the building department's required inspections, and/or observe the diagnostic testing and field verification performed by builder employees or subcontractors and the certified HERS rater in conjunction with the building department's required inspections to corroborate the results documented in installer certifications, and HERS rater field verifications on the MECH-5.

For space conditioning units that have used a compliance alternative that requires field verification and diagnostic testing, the building department shall not approve a building for occupancy until the building department has received a MECH-5 that has been signed and dated by the HERS rater.

~~7.5 HERS Verification Procedures~~

~~HERS field verification and diagnostic testing shall be completed for each building. Field verification and diagnostic testing for compliance credit for duct sealing shall use the diagnostic duct leakage from fan pressurization of ducts in Section 4.3.8.2 of Appendix G. The HERS rater shall use the same fan flow basis as was used by the installer to calculate percentage duct leakage.~~

~~7.6 Responsibilities and Documentation~~

~~7.6.1 Builder~~

~~Builder employees or subcontractors responsible for completing either diagnostic testing, visual inspection or verification as specified in Section 7.4 shall certify the diagnostic testing results and that the work meets the requirements for compliance credit on the *Certificate of Field Verification and Diagnostic Testing* (MECH-5).~~

~~The builder shall provide the HERS provider with the identifying location of the building to receive diagnostic testing and the expected date that testing may begin. The builder shall provide the HERS provider a copy of the *Certificate of Field Verification and Diagnostic Testing* (MECH-5) signed by the builder employees or sub-contractors certifying that diagnostic testing and installation meet the requirements for compliance credit.~~

~~The builder shall provide a *Certificate of Field Verification and Diagnostic Testing* (MECH-5) signed and dated by the HERS rater to the building official in conjunction with requests for final inspection for each building.~~

~~7.6.2 HERS Provider and Rater~~

~~The HERS provider shall maintain records of all buildings tested, corrective actions taken, and copies of all *Certificate of Field Verification and Diagnostic Testing* (MECH-5) forms for a period of five years.~~

~~The HERS rater providing the diagnostic testing and verification shall sign and date a *Certificate of Field Verification and Diagnostic Testing* (MECH-5) form certifying that he/she has verified that the requirements for compliance credit have been met. The HERS rater shall provide this certificate to the builder and the HERS provider.~~

~~The HERS rater shall not sign a *Certificate of Field Verification and Diagnostic Testing* (MECH-5) form for a building that does not have a *Certificate of Field Verification and Diagnostic Testing* (MECH-5) form signed by the installer as required in Sections 7.4 and 7.6.1.~~

~~7.6.3 Building Department~~

~~The building department at its discretion may require independent testing and field verification in conjunction with the building department's required inspections, and/or observe the diagnostic testing and field verification performed by builder employees or subcontractors and the certified HERS rater in conjunction with the building department's required inspections to corroborate the results documented in installer certifications, and in the *Certificate of Field Verification and Diagnostic Testing* (MECH-5) form.~~

~~For buildings that have used a compliance alternative that requires field verification and diagnostic testing, the building department shall not approve a building for occupancy until the building department has received from the builder a *Certificate of Field Verification and Diagnostic Testing* (MECH-5) form that has been signed and dated by the HERS rater~~

Appendices Table of Contents

Appendix NA - Nonresidential ACM Approval Application NA-1

Appendix NB - Illuminance Categories and Luminaire Power NB-1
Illuminance Categories NB-1
Illuminance Categories and Luminaire Power NB-1

Appendix NC - Fan Motor Efficiencies NC-1

Appendix ND - Compliance Procedures for Relocatable Public School Buildings ND-1
ND.1 Purpose and Scope ND-1
ND.2 The Plan Check Process ND-1
ND.3 The Compliance Process ND-1
ND.4 Documentation ND-2
ND.5 Optional Features ND-3

~~Appendix NE - Approved Forms~~ NE-1

Appendix NF - Technical Databases for Test Runs NF-1

Appendix NG - Standard Procedure for Determining the Energy Efficiencies of Single-Zone Nonresidential Air Distribution Systems in Buffer Spaces or Outdoors NG-1

NG.1 Purpose and Scope NG-1
NG.2 Definitions NG-1
NG.3 Nomenclature NG-3
NG.4 Air Distribution Diagnostic Measurement and Default Assumptions NG-6
NG.4.1 Instrumentation Specifications NG-6
NG.4.2 Apparatus NG-6
NG.4.3 Procedure NG-6
NG.4.4 Delivery Effectiveness (DE) Calculations NG-17
NG.4.5 Seasonal Distribution System Efficiency NG-19
NG.4.6 Hourly Distribution System Efficiency NG-20

Appendix NH - Test Nonresidential Air Distribution Systems NH-1

Appendix NI - Alternate Default Fenestration Thermal Properties NI-1
NI.1 Solar Heat Gain Coefficient NI-1
NI.1.2 Responsibilities for SHGC Compliance NI-2
NI.2 Thermal Transmittance (U-Factor) NI-4
NI.2.1 Responsibilities for U-factor Compliance NI-5

Appendix NJ - Acceptance Requirements for Nonresidential Buildings NJ-1
NJ.1 Purpose and Scope NJ-1
NJ.2 Introduction NJ-1
NJ.3 Outdoor Air NJ-2
NJ.3.1 Variable Air Volume Systems Outdoor Air Acceptance NJ-2
NJ.3.2 Constant Volume System Outdoor Air Acceptance NJ-2
NJ.4 Packaged HVAC Systems NJ-2
NJ.4.1 Constant Volume Packaged HVAC Systems Acceptance NJ-3
NJ.5. Air Distribution Systems NJ-4
NJ.5.1 Air Distribution Acceptance NJ-4
NJ.6. Lighting Control Systems NJ-5
NJ.6.1 Automatic Daylighting Controls Acceptance NJ-5
NJ.6.2 Occupancy Sensor Acceptance NJ-7
NJ.6.3 Manual Daylighting Controls Acceptance NJ-7
NJ.6.4 Automatic Time Switch Control Acceptance NJ-8
NJ.7. Air Economizer Controls NJ-8
NJ.7.1 Economizer Acceptance NJ-8
NJ.8. Demand Control Ventilation (DCV) Systems NJ-9

NJ.8.1 Packaged Systems DCV Acceptance NJ-9
NJ.9. Variable Frequency Drive Systems NJ-10
NJ.9.1 Supply Fan Variable Flow Controls NJ-10
NJ.10. Hydronic System Controls Acceptance NJ-10
NJ.10.1 Variable Flow Controls NJ-10
NJ.10.2 Automatic Isolation Controls NJ-11
NJ.10.3 Supply Water Temperature Reset Controls NJ-11
NJ.10.4 Water-loop Heat Pump Controls NJ-12
NJ.10.5 Variable Frequency Drive Controls NJ-13

ACM NA-2005

Appendix NA - Nonresidential ACM Approval Application

CALIFORNIA ENERGY RESOURCES

CONSERVATION AND DEVELOPMENT COMMISSION

APPLICATION FOR APPROVAL OF A VENDOR-CERTIFIED ALTERNATIVE CALCULATION METHOD FOR USE IN DEMONSTRATING COMPLIANCE WITH THE NONRESIDENTIAL BUILDING ENERGY EFFICIENCY STANDARDS PER SECTION 141, TITLE 24 OF THE CALIFORNIA CODE OF REGULATIONS

Part I: General Information

1. Organization filing application:

   Name: _____ Phone: ( )_____

   Address: _____

   _____

2. Name of person responsible for completion of this application:

   Name: _____ Phone: ( )_____

   Address: _____

   _____

3. Name, Date, and Version of the Alternative Calculation Method (ACM):

   Name: _____ Date: _____

   Version: _____

4. Has a previous version of this ACM ever been certified?

   [ ] YES [ ] NO

5. Has this ACM been previously submitted for approval or certification?

   [ ] YES [ ] NO

6. Has this ACM ever been used to analyze the energy use of a building in California?

   [ ] YES [ ] NO

7. Has this ACM ever been used to determine compiance with the energy efficiency standards of California?

   [ ] YES [ ] NO

VENDOR CERTIFICATION OF ALTERNATIVE CALCULATION METHOD

I/We,_____, certify that the alternative calculation method (ACM), herein
name(s)

designated _____ ,version _____ , dated_____,
name of alternative calculation method version last saved update

occupying_____bytes of memory, conforms to all of the requirements specified for an
exact memory size in bytes

ACM for Commission approval listed in the Nonresidential ACM Approval Manual. I/We specifically certify that this ACM sucessfully conforms to the test criteria for each and every ACM capability test in Chapter 4 of the Alternative Calculation Method (ACM) Approval Manual for the Nonresidential building energy efficiency standards. Moreover, I/we certify that, to the best of my/our knowledge and belief, we have found no instances where this ACM would indicate compliance for a proposed building that the reference computer program using the the reference method would indicate fails to comply with the building energy efficiency standards.

I/We also understand that all required inputs must be available in any approvable ACM but the ACM is not required to model the features described by a given set of inputs. I/We stipulate that this ACM gives the user access to the required inputs and that this ACM automatically warns the user when building inputs use features that the ACM cannot model with sufficient accuracy and automatically fails the proposed building by a margin sufficient to meet the test criteria for any test of that capability.

Signed: Date:

_____ _____

_____ _____

ACM Application Test Results for Required Capabilities Tests

TEST	PTa	STa	DTa	PTr	STr	DTr	CR1	CR2	LITEr	RECPr	CR3	CR4
A11A09												
A12A09												
A13A09												
A21B13												
A22B13												
A23B06												
A24B16												
A25B03												
A26B13												
A27B16												
B11B13												
B12B13												
B13B13												
B14B06												
B15B16												
B21B12												
B22B12												
B23B12												

DTi = PTi - STi where i is either ‘a’ for acm or ‘r’ for reference

CR1 = DTa - (0.85 × DTr - 1) > 0 when DTa ≥ 0

CR2 = DTa - (1.15 × DTr - 1) > 0 when DTa < 0

CR3 = LITEa/LITEr must be ≥ 0.980 and ≤ 1.020

CR4 = RECPa/RECPr must be ≥ 0.980 and ≤ 1.020

ACM Application Test Results for Required Capabilities Tests

TEST	PTa	STa	DTa	PTr	STr	DTr	CR1	CR2	LITEr	RECPr	CR3	CR4
B24B03												
B31D12												
B32D12												
C11A10												
C12A10												
C13A10												
C14A10												
C15A10												
C21B10												
C22C16												
D11D12												
D12D12												
D13D07												
D14D07												
E11D16												
E12D16												
E13D16												
E14D14												

DTi = PTi - STi where i is either ‘a’ for acm or ‘r’ for reference

CR1 = DTa - (0.85 × DTr - 1) > 0 when DTa ≥ 0

CR2 = DTa - (1.15 × DTr - 1) > 0 when DTa < 0

CR3 = LITEa/LITEr must be ≥ 0.980 and ≤ 1.020

CR4 = RECPa/RECPr must be ≥ 0.980 and ≤ 1.020

ACM Application Test Results for Required Capabilities Tests

TEST	PTa	STa	DTa	PTr	STr	DTr	CR1	CR2	LITEr	RECPr	CR3	CR4
E15D14												
E16D14												
E21B16												
E22B16												
E23B16												
E24B12												
E25B12												
E26B12												
F11A07												
F12A13												
F13B12												
F14B12												
F15A01												
G11A11												
G12A11												
G13A11												
G14A11												
G15B03												
G16B16												

DTi = PTi - STi where i is either ‘a’ for acm or ‘r’ for reference

CR1 = DTa - (0.85 × DTr - 1) > 0 when DTa ≥ 0

CR2 = DTa - (1.15 × DTr - 1) > 0 when DTa < 0

CR3 = LITEa/LITEr must be ≥ 0.980 and ≤ 1.020

CR4 = RECPa/RECPr must be ≥ 0.980 and ≤ 1.020

ACM Application Test Results for

Optional Capabilities Tests

TEST	PTa	STa	DTa	PTr	STr	DTr	CR1	CR2	LITEr	RECPr	CR3	CR4
OC1A09												
O11B13												
O12B13												
O21B13												
O22B13												
O23B13												
O24B13												
O31A12												
O32A12												
O33A12												
O41B13												
O61B12												
O62B12												
O63B12												
O64B12												
O65B12												
O66B12												

DTi = PTi - STi where i is either ‘a’ for acm or ‘r’ for reference

CR1 = DTa - (0.85 $\times$ DTr - 1) > 0 when DTa $\geq$ 0

CR2 = DTa - (1.15 $\times$ DTr - 1) > 0 when DTa < 0

CR3 = LITEa/LITEr must be $\geq$ 0.980 and $\leq$ 1.020

CR4 = RECPa/RECPr must be $\geq$ 0.980 and $\leq$ 1.020

ACM Application Test Results for

Optional Capabilities Tests

TEST	PTa	STa	DTa	PTr	STr	DTr	CR1	CR2	LITEr	RECPr	CR3	CR4
O71B12												
O81A11												
O82A15												
O91A13												
O92A11												
O93A12												
O94A13												

DTi = PTi - STi where i is either 'a' for acm or 'r' for reference

CR1 = DTa - (0.85 × DTr - 1) > 0 when DTa ≥ 0

CR2 = DTa - (1.15 × DTr - 1) > 0 when DTa < 0

CR3 = LITEa/LITEr must be ≥ 0.980 and ≤ 1.020

CR4 = RECPa/RECPr must be ≥ 0.980 and ≤ 1.020

ACM NB-2005

Appendix NB - Illuminance Categories and Luminaire Power

Illuminance Categories

Please see Chapter 10 in the IESNA Lighting Handbook, Ninth Edition.

Illuminance Categories and Luminaire Power

Luminaire power shall be taken from the following tables.

Table NB-1 – Fluorescent Circline
Table NB-2 – Compact Fluorescent 2D
Table NB-3 – Compact Fluorescent
Table NB-4 –Long Compact Fluorescent
Table NB-5 – Fluorescent U-Tubes
Table NB-6 – Fluorescent Linear Lamps – Preheat
Table NB-7 – Fluorescent Linear Lamps T5
Table NB-8 – Fluorescent Rapid Start T-8
Table NB-9 – Fluorescent Rapid Start T-12
Table NB-10 – Fluorescent Rapid Start High Output (HO) T8 & T12, 8 ft
Table NB-11 – Fluorescent Instant Start (single pin base "Slimline") T12, 4 ft
Table NB-12 – Fluorescent Instant Start (single pin base "Slimline") T8 & T12, 8 ft.
Table NB-13 – High Intensity Discharge
Table NB-14 – 12 Volt Tungsten Halogen Lamps Including MR16, Bi-pin, AR70, AR111, PAR36

Table NB-1 – Fluorescent Circline

Type	Lamps Number	Lamps Designation	Ballasts Number	Ballasts Designation	Ballasts Description	System Watts	Comment
Rapid Start (22 W)	1	FC8T9	1	MAG STAND.	Mag. Stand.	27	8" OD
T5 Program Start (22 W)	1	FC9T5	1	ELECT NO	Electronic Normal Light	28	8" OD
	2	FC9T5	1	ELECT NO	Electronic Normal Light	53	
T5 Program Start (40 W)	1	FC12T5	1	ELECT NO	Electronic Normal Light	41	12" OD
	2	FC12T5	1	ELECT NO	Electronic Normal Light	80	
T5 Rapid Start (55 W)	1	FC12T5HO	1	ELECT NO	Electronic Normal Light	55	12" OD
	2	FC12Tag5HO	1	ELECT NO	Electronic Normal Light	103	
	1	FC12T5HO	1	ELECT DIM	Electronic Dimming	12~59	
	2	FC12T5HO	1	ELECT DIM	Electronic Dimming	24~114	
T5 Rapid Start (40 + 22 W)	1+1	FC12T5/FC9T5	1	ELECT NO	Electronic Normal Light	68	8" & 12" OD

RO = ballast factor 70 to 85% NO = ballast factor 85 to 100% HO = ballast factor >100%

Table NB-2 – Compact Fluorescent 2D

Type	Lamps Number	Lamps Designation	Ballasts Number	Ballasts Designation	Ballasts Description	System Watts	Comment
10W, GR10q-4 Four Pin Base	1	CFS10W/GR10q	1	MAG STD	Mag. Stand.	16	3.6" across
	1	CFS10W/GR10q	1	ELECT	Electronic	13	
	2	CFS10W/GR10q	1	ELECT	Electronic	26	
16W, GR10q-4 Four Pin Base	1	CFS16W/GR10q	1	MAG STD	Mag. Stand.	23	5.5" across
	1	CFS16W/GR10q	1	ELECT	Electronic	15	
	2	CFS16W/GR10q	1	ELECT	Electronic	30	
21W, GR10q-4 Four Pin Base	1	CFS21W/GR10q	1	MAG STD	Mag. Stand.	31	5.5" across
	1	CFS21W/GR10q	1	ELECT	Electronic	21	
	2	CFS21W/GR10q	1	ELECT	Electronic	42	
28W, GR10q-4 Four Pin Base	1	CFS28W/GR10q	1	MAG STD	Mag. Stand.	38	8.1" across
	1	CFS28W/GR10q	1	ELECT	Electronic	28	
	2	CFS28W/GR10q	1	ELECT	Electronic	56	
(38W, GR10q-4 Four Pin Base	1	CFS38W/GR10q	1	ELECT	Electronic	37	8.1" across
	2	CFS38W/GR10q	1	ELECT	Electronic	74	

RO = ballast factor 70 to 85% NO = ballast factor 85 to 100% HO = ballast factor >100%

Table NB-3 – Compact Fluorescent

Type	Lamps Number	Lamps Designation	Ballasts Number	Ballasts Designation	Ballasts Description	System Watts	Comment
Twin (5 W, G23 Two Pin Base - F5TT Lamp)	1	CFT5W/G23	1	MAG STD	Mag. Stand.	9	4.1" MOL
	2	CFT5W/G23	2	MAG STD	Mag. Stand.	18	
Twin (7 W, G23 Two Pin Base - F7TT Lamp)	1	CFT7W/G23	1	MAG STD	Mag. Stand.	11	5.3" MOL
	2	CFT7W/G23	2	MAG STD	Mag. Stand.	22	
Twin (7 W, 2G7 Four Pin Base - F7TT Lamp)	1	CFT7W/2G7	1	ELECT	Electronic	8	5.3" MOL
	2	CFT7W/2G7	2	ELECT	Electronic	16	
Twin (9 W, G23 Two Pin Base - F9TT Lamp)	1	CFT9W/G23	1	MAG STD	Mag. Stand.	13	6.5" MOL
	2	CFT9W/G23	2	MAG STD	Mag. Stand.	26	
Twin (9 W, 2G7 Four Pin Base - F9TT Lamp)	1	CFT9W/2G7	1	ELECT	Electronic	10	6.5" MOL
	2	CFT9W/2G7	2	ELECT	Electronic	20	
Twin (13 W, GX23 Two Pin Base - F13TT)	1	CFT13W/GX23	1	MAG STD	Mag. Stand.	17	7.5" MOL
	2	CFT13W/GX23	2	MAG STD	Mag. Stand.	34	
Twin (13 W, 2GX7 Four Pin Base - F13TT)	1	CFT13W/2GX7	1	ELECT	Electronic	17	7.5" MOL
	2	CFT13W/2GX7	2	ELECT	Electronic	34	
Quad (9 W, G23-2 Two Pin Base - F9DTT Lamp)	1	CFQ9W/G23-2	1	MAG STD 120	120 V Mag. Stand.	13	4.4" MOL
	2	CFQ9W/G23-2	2	MAG STD 120	120 V Mag. Stand.	26	
Quad (13 W, G24d-1 Two Pin Base - F13DTT Lamp)	1	CFQ13W/G24d-1	1	MAG STD 120	120 V Mag. Stand.	18	6.0" MOL
	2	CFQ13W/G24d-1	2	MAG STD 120	120 V Mag. Stand.	36	
	1	CFQ13W/G24d-1	1	MAG STD 277	277 V Mag. Stand.	16	
	2	CFQ13W/G24d-1	2	MAG STD 277	227 V Mag. Stand.	32	
Quad (13 W, GX23-2 Two Pin Base)	1	CFQ13W/GX23-2	1	MAG STD	Mag. Stand.	17	4.8" MOL
	2	CFQ13W/GX23-2	2	MAG STD	Mag. Stand.	34	
Quad (16W GX32d-1 Two Pin Base)	1	CFQ16W/GX32d-1	1	MAG STD	Mag. Stand.	20	5.5" MOL
	2	CFQ16W/GX32d-1	2	MAG STD	Mag. Stand.	40	
Quad (18 W, G24d-2 Two Pin Base	1	CFQ18W/G24d-2	1	MAG STD 120	120 V Mag. Stand.	25	6.8" MOL

Type	Lamps Number	Lamps Designation	Ballasts Number	Ballasts Designation	Ballasts Description	System Watts	Comment
- F18DTT Lamp)	2	CFQ18W/G24 d-2	2	MAG STD 120	120 V Mag. Stand.	50	
	1	CFQ18W/G24 d-2	1	MAG STD 277	227 V Mag. Stand.	22	
	2	CFQ18W/G24 d-2	2	MAG STD 277	227 V Mag. Stand.	44	
	1	CFQ22W/GX 32d-2	1	MAG STD	Mag. Stand.	27	6.0" MOL
Quad (22W, GX32d Two Pin Base)	2	CFQ22W/GX 32d-2	2	MAG STD	Mag. Stand.	54	
Quad (26 W, G24d-3 Two Pin Base - F26DTT Lamp)	1	CFQ26W/G24 d-3	1	MAG STD 120	120 V Mag. Stand.	37	7.6" MOL
	2	CFQ26W/G24 d-3	2	MAG STD 120	120 V Mag. Stand.	74	
	1	CFQ26W/G24 d-3	1	MAG STD 277	227 V Mag. Stand.	33	
	2	CFQ26W/G24 d-3	2	MAG STD 277	227 V Mag. Stand.	66	
	1	CFQ26W/G24 d-3	1	ELECT 277V	277 V Electronic	27	
	2	CFQ26W/G24 d-3	2	ELECT 277V	277 V Electronic	54	
Quad (28W GX32d Two Pin Base)	1	CFQ28W/GX 32d-3	1	MAG STD	Mag. Stand.	34	6.8" MOL
	2	CFQ28W/GX 32d-3	2	MAG STD	Mag. Stand.	68	
Quad (10 W, G24q-1 Four Pin Base)	1	CFQ10W/G24 q-1	1	MAG STD 120	120 V Mag. Stand.	16	4.6" MOL
	2	CFQ10W/G24 q-1	2	MAG STD 120	120 V Mag. Stand.	32	
	1	CFQ10W/G24 q-1	1	MAG STD 277	227 V Mag. Stand.	13	
	2	CFQ10W/G24 q-1	2	MAG STD 277	227 V Mag. Stand.	26	
Quad (13 W, G24q-1 Four Pin Base)	1	CFQ13W/G24 q-1	1	MAG STD 120	120 V Mag. Stand.	18	6.0" MOL
	2	CFQ13W/G24 q-1	2	MAG STD 120	120 V Mag. Stand.	36	
	1	CFQ13W/G24 q-1	1	MAG STD 277	227 V Mag. Stand.	16	
	2	CFQ13W/G24 q-1	2	MAG STD 277	227 V Mag. Stand.	32	
	1	CFQ13W/G24 q-1	1	ELECT	Electronic	14	
	2	CFQ13W/G24 q-1	2	ELECT	Electronic	25	

Type	Lamps Number	Lamps Designation	Ballasts Number	Ballasts Designation	Ballasts Description	System Watts	Comment
Quad (13 W, GX7 Four Pin Base)	1	CFQ13W/GX7	1	MAG STD	Mag. Stand.	17	4.8" MOL
	2	CFQ13W/GX7	2	MAG STD	Mag. Stand.	34	
Quad (18 W, G24q-2 Four Pin Base)	1	CFQ18W/G24q-2	1	MAG STD 120	120 V Mag. Stand.	25	6.8" MOL
	2	CFQ18W/G24q-2	2	MAG STD 120	120 V Mag. Stand.	50	
	1	CFQ18W/G24q-2	1	MAG STD 277	227 V Mag. Stand.	22	
	2	CFQ18W/G24q-2	2	MAG STD 277	227 V Mag. Stand.	44	
	1	CFQ18W/G24q-2	1	ELECT	Electronic	21	
	2	CFQ18W/G24q-2	2	ELECT	Electronic	38	
Triple (13 W, GX24q-1 Four Pin Base)	1	CFM 13W/GX24q-1	1	MAG STD	Mag. Stand.	18	4.2" MOL
	2	CFM 13W/GX24q-1	2	MAG STD	Mag. Stand.	36	
	1	CFM 13W/GX24q-1	1	ELECT	Electronic	14	
	2	CFM 13W/GX24q-1	2	ELECT	Electronic	25	
Triple (18W, GX24q-2 Four Pin Base)	1	CFM 18W/GX24q-2	1	MAG STD	Mag. Stand.	25	5.0" MOL
	2	CFM 18W/GX24q-2	2	MAG STD	Mag. Stand.	50	
	1	CFM 18W/GX24q-2	1	ELECT	Electronic	21	
	2	CFM 18W/GX24q-2	2	ELECT	Electronic	38	
Triple (26W, GX24q-3 Four Pin Base)	1	CFTR 26W/GX24q-3	1	MAG STD	Mag. Stand.	37	4.9 to 5.4" MOL
	2	CFTR 26W/GX24q-3	2	MAG STD	Mag. Stand.	74	
	1	CFTR 26W/GX24q-3	1	ELECT	Electronic	28	

Type	Lamps		Ballasts			System Watts	Comment
	Number	Designation	Number	Designation	Description		
	2	CFTR 26W/GX24q-3	1	ELECT	Electronic	55	
	1	CFTR 26W/GX24q-3	1	ELECT DIM	Electronic DImming	8~29	BF .05~1.0
	2	CFTR 26W/GX24q-3	1	ELECT DIM	Electronic Dimming	12~57	BF .05~1.0
Triple (32 W, GX24q-3 Four Pin Base)	1	CFTR32WGX 24q-3	1	ELECT	Electronic	35	
	2	CFTR32WGX 24q-3	1	ELECT	Electronic	69	
	1	CFTR32WGX 24q-3	1	ELECT DIM	Electronic DImming	9~38	BF .05~1.05
	2	CFTR32WGX 24q-3	1	ELECT DIM	Electronic Dimming	20~76	BF .05~1.05
Triple or Quad (42W, GX24q-4 Four Pin Base)	1	CFTR42WGX 24q-4	1	ELECT	Electronic	46	
	2	CFTR42WGX 24q-4	1	ELECT	Electronic	94	
	1	CFTR42WGX 24q-4	1	ELECT DIM	Electronic DImming	10~49	BF .05~1.05
Triple or Quad (42W, GX24q-4 Four Pin Base) *cont.*	2	CFTR42WGX 24q-4	1	ELECT DIM	Electronic Dimming	20~98	BF .05~1.05
Triple or Quad (57W, GX24q-5 Four Pin Base)	1	CFTR57WGX 24q-5	1	ELECT	Electronic	62	
	1	CFTR57WGX 24q-5	1	ELECT DIM	Electronic Dimming	18~66	BF .05~1.05
Triple or Quad (70W, GX24q-6 Four Pin Base)	1	CFTR70WGX 24q-6	1	ELECT	Electronic	75	
	1	CFTR70WGX 24q-6	1	ELECT DIM	Electronic Dimming	18~80	BF .05~1.00

RO = ballast factor 70 to 85% NO = ballast factor 85 to 100% HO = ballast factor >100%

Table NB-4 –Long Compact Fluorescent

	Lamps		Ballasts				
Type	Number	Designation	Number	Designation	Description	System Watts	Comment
T5 Twin (18W - F18TT Lamp)	1	FT18W/2G11	1	MAG.	Mag. Energy Efficient	23	BF~1.0
	2	FT18W/2G11	1	MAG.	Mag. Energy Efficient	46	BF~1.0
	3	FT18W/2G11	1	MAG.	Mag. Energy Efficient	69	
	1	FT18W/2G11	1	ELECT	Electronic	24	
	2	FT18W/2G11	1	ELECT	Electronic	35	
	3	FT18W/2G11	1	ELECT	Electronic	52	
T5 Twin (24-27W- F24TT or F27TT Lamp)	1	FT24W/2G11	1	MAG.	Mag. Energy Efficient	32	
	2	FT24W/2G11	1	MAG.	Mag. Energy Efficient	66	
	3	FT24W/2G11	1	MAG.	Mag. Energy Efficient	98	
	1	FT24W/2G11	1	ELECT	Electronic	27	BF~1.0
	2	FT24W/2G11	1	ELECT	Electronic	52	BF~1.0
T5 Twin (36-39W - F36TT or F39TT Lamp)	1	FT36W/2G11	1	MAG.	Mag. Energy Efficient	51	
	2	FT36W/2G11	1	MAG.	Mag. Energy Efficient	66	
	3	FT36W/2G11	2	MAG.	Mag. Energy Efficient	117	
	1	FT36W/2G11	1	ELECT	Electronic	37	
	2	FT36W/2G11	1	ELECT	Electronic	70	
	1	FT36W/2G11	1	ELECTHO	Electronic High Output	46	BF=1.22
	2	FT36W/2G11	1	ELECTHO	Electronic High Output	86	BF=1.20
T5 Twin (40 W - F40TT Lamp)	1	FT40W/2G11	1	MAG.	Mag. Energy Efficient	43	
	2	FT40W/2G11	1	MAG.	Mag. Energy Efficient	86	
	3	FT40W/2G11	2	MAG.	Mag. Energy Efficient	130	
Electronic Ballasts	1	FT40W/2G11	1	ELECT NO	Electronic	41	BF~.90
	2	FT40W/2G11	1	ELECT NO1	Electronic	72	BF~.88
	2	FT40W/2G11	1	ELECT NO2	Electronic	78	BF~.97
	3	FT40W/2G11	1	ELECT NO	Electronic	103	BF~.86
	1	FT40W/2G11	1	ELECT HO	Electronic High Output	50	BF ~ 1.1
	1	FT40W/2G11	1	ELECT DIM1	Electronic Dimming	10-41	BF .05~1.0
	2	FT40W/2G11	1	ELECT DIM1	Electronic Dimming	17-80	BF .05~1.0
	1	FT40W/2G11	1	ELECT DIM2	Electronic Dimming	11-38	BF .05~.88
	2	FT40W/2G11	1	ELECT DIM2	Electronic Dimming	16-76	BF .05~.88
T5 Twin (50 W - F50TT Lamp)	1	FT50W/2G11	1	ELECT NO	Electronic Normal Output	54	BF~.98
	2	FT50W/2G11	1	ELECT NO	Electronic Normal Output	106	BF~.98
	1	FT50W/2G11	1	ELECT HO	Electronic High Output	61	BF~1.12
	2	FT50W/2G11	1	ELECT HO	Electronic High Output	115	BF~1.10
	1	FT50W/2G11	1	ELECT DIM	Electronic Dimming	51	
	2	FT50W/2G11	1	ELECT DIM	Electronic Dimming	92	

	Lamps		Ballasts			System	
Type	Number	Designation	Number	Designation	Description	Watts	Comment
T5 Twin (55 W - F55TT Lamp)	1	FT55W/2G11	1	ELECT NO	Electronic Normal Output	58	BF~.92
	2	FT55W/2G11	1	ELECT NO	Electronic Normal Output	109	BF~.90
	1	FT55W/2G11	1	ELECT DIM	Electronic Dimming	13-59	BF .03~.90
	2	FT55W/2G11	1	ELECT DIM	Electronic Dimming	24-114	BF .03~.90
T5 Twin (80 W – F80TT Lamp)	1	FT80W/2G11	1	ELECT NO	Electronic	91	BF~1.00

RO = ballast factor 70 to 85% NO = ballast factor 85 to 100% HO = ballast factor >100%

Table NB-5 – Fluorescent U-Tubes

Type	Lamps		Ballasts			System Watts	Comment
	Number	Designation	Number	Designation	Description		
2 ft. Fluorescent U-Tube T8 (32W - FBO31T8 or F32T8/U/6 Lamp)	1	FB31T8/F32T8U	0.5	MAG.	Mag. Energy Efficient	35	Tandem wired
	1	FB31T8/F32T8U	1	MAG.	Mag. Energy Efficient	36	
	2	FB31T8/F32T8U	1	MAG.	Mag. Energy Efficient	69	
	3	FB31T8/F32T8U	1.5	MAG.	Mag. Energy Efficient	104	Tandem wired
	3	FB31T8/F32T8U	2	MAG.	Mag. Energy Efficient	105	
	1	FB31T8/F32T8U	1	ELECT NO	Electronic Normal Output	39	
	2	FB31T8/F32T8U	1	ELECT NO	Electronic Normal Output	62	
	3	FB31T8/F32T8U	1	ELECT NO	Electronic Normal Output	92	
	4	FB31T8/F32T8U	1	ELECT NO	Electronic Normal Output		
	1	FB31T8/F32T8U	1	ELECT DIM	Electronic DImming	9~33	BF .05~.88
	2	FB31T8/F32T8U	1	ELECT DIM	Electronic DImming	14~64	BF .05~.88
	3	FB31T8/F32T8U	1	ELECT DIM	Electronic Dimming	18~93	BF .05~.88
	4	FB31T8/F32T8U	1	ELECT DIM	Electronic Dimming	25~116	BF .05~.88
2 ft. Fluorescent U-Tube T12 ("Energy Saving" 34W)	1	FB40T12/ES	0.5	MAG.	Mag. Energy Efficient	36	Tandem wired
	1	FB40T12/ES	1	MAG.	Mag. Energy Efficient	43	
	2	FB40T12/ES	1	MAG.	Mag. Energy Efficient	72	
	3	FB40T12/ES	1	MAG.	Mag. Energy Efficient	105	
	3	FB40T12/ES	1.5	MAG.	Mag. Energy Efficient	108	Tandem wired
	3	FB40T12/ES	2	MAG.	Mag. Energy Efficient	115	
	1	FB40T12/ES	0.5	ELECT	Electronic	30	Tandem wired
	1	FB40T12/ES	1	ELECT	Electronic	31	
	2	FB40T12/ES	1	ELECT	Electronic	59	
	3	FB40T12/ES	1	ELECT	Electronic	90	
	3	FB40T12/ES	1.5	ELECT	Electronic	88	Tandem wired
	3	FB40T12/ES	2	ELECT	Electronic	90	

RO = ballast factor 70 to 85% NO = ballast factor 85 to 100% HO = ballast factor >100%

Table NB-6 – Fluorescent Linear Lamps – Preheat

Type	Lamps		Ballasts			System Watts	Comment
	Nmbr	Designation	Nmbr	Designation	Description		
Fluorescent Preheat T5 (8W)	1	F8T5	1	MAG STD	Mag. Stand.	12	12" MOL
Fluorescent Preheat T8 (15W)	1	F15T8	1	MAG STD	Mag. Stand.	19	18" MOL
Fluorescent Preheat T12 (15W)	1	F15T12	1	MAG STD	Mag. Stand.	19	18" MOL
Fluorescent Preheat T12 (20W)	1	F20T12	1	MAG STD	Mag. Stand.	25	24" MOL
	2	F20T12	1	MAG STD	Mag. Stand.	50	24" MOL
Fluorescent Preheat T8 (30W)	1	F30T8	1	MAG STD	Mag. Stand.	46	30" MOL
	2	F30T8	1	MAG STD	Mag. Stand.	79	30" MOL

RO = ballast factor 70 to 85% NO = ballast factor 85 to 100% HO = ballast factor >100%

Table NB-7 – Fluorescent Linear Lamps T5

Type	Lamps		Ballasts			System Watts	Comment
	Number	Designation	Number	Designation	Description		
~23" Fluorescent Program Start T5 (14W)	1	F14T5	1	ELECT	Elect. Program Start BF=1	18	
	2	F14T5	1	ELECT	Elect. Program Start BF=1	34	
~34.5" Fluorescent Program Start T5 (21W)	1	F21T5	1	ELECT	Elect. Program Start BF=1	27	
	2	F21T5	1	ELECT	Elect. Program Start BF=1	50	
~46" Fluorescent Program Start T5 (28W)	1	F28T5	1	ELECT	Elect. Program Start BF=1	30	
	2	F28T5	1	ELECT	Elect. Program Start BF=1	60	
~58.5" Fluorescent Program Start T5 (35W)	1	F35T5	1	ELECT	Elect. Program Start BF=1	40	
	2	F35T5	1	ELECT	Elect. Program Start BF=1	78	
~23" Fluorescent Program Start T5 High Output (24W)	1	F24T5HO	1	ELECT	Elect. Program Start BF=1	27	
	2	F24T5HO	1	ELECT	Elect. Program Start BF=1	52	
~34.5" Fluorescent Program Start T5 High Output(39W)	1	F39T5	1	ELECT	Elect. Program Start BF=1	43	
	2	F39T5	1	ELECT	Elect. Program Start BF=1	85	
~46" Fluorescent Program Start T5 High Output (54W)	1	F54T5	1	ELECT	Elect. Program Start BF=1	62	
	2	F54T5	1	ELECT	Elect. Program Start BF=1	117	

	1	F54T5	1	ELECT DIM	Elect. Dimming	12-63
	2	F54T5	1	ELECT DIM	Elect. Dimming	24-125
~57.5" Fluorescent Program Start T5 High Output (80W)	1	ºF80T5	1	ELECT	Elect. Program Start BF=1	89

RO = ballast factor 70 to 85% NO = ballast factor 85 to 100% HO = ballast factor >100%

Table NB-8 – Fluorescent Rapid Start T-8

Type	Lamps		Ballasts			System Watts	Comment
	Number	Designation	Number	Designation	Description		
2 foot Fluorescent Rapid Start T8 (17W)	1	F17T8	1	MAG.	Mag. Energy Efficient	24	
	2	F17T8	1	MAG.	Mag. Energy Efficient	45	
Electronic Ballasts	1	F17T8	1	ELECT NO	Electronic Normal Output	22	
	2	F17T8	1	ELECT NO	Electronic Normal Output	33	
	3	F17T8	1	ELECT NO	Electronic Normal Output	53	
	3	F17T8	2	ELECT NO	Electronic Normal Output	55	
	4	F17T8	1	ELECT NO	Electronic Normal Output	63	
2 foot Fluorescent Rapid Start T8 (17W)	1	F17T8	1	ELECT DIM	Electronic Dimming	8~20	BF .05~.88
	2	F17T8	1	ELECT DIM	Electronic Dimming	10~37	BF .05~.88
	3	F17T8	1	ELECT DIM	Electronic Dimming	12~56	BF .05~.88
	4	F17T8	1	ELECT DIM	Electronic Dimming	18~69	BF .05~.88
3 foot Fluorescent Rapid Start T8 (25W)	1	F25T8	1	MAG.	Mag. Energy Efficient	33	
	2	F25T8	1	MAG.	Mag. Energy Efficient	65	
Electronic Ballasts	1	F25T8	1	ELECT NO	Electronic Normal Output	27	
	2	F25T8	1	ELECT NO	Electronic Normal Output	48	
	3	F25T8	1	ELECT NO	Electronic Normal Output	68	
	4	F25T8	1	ELECT NO	Electronic Normal Output	89	
	1	F25T8	1	ELECT RO	Electronic Reduced Output	24	
	2	F25T8	1	ELECT RO	Electronic Reduced Output	41	
	3	F25T8	1	ELECT RO	Electronic Reduced Output	59	
	4	F25T8	1	ELECT RO	Electronic Reduced Output	76	
	1	F25T8	1	ELECT HO	Electronic High Output	29	BF~1.05
	2	F25T8	1	ELECT HO	Electronic High Output	51	BF~1.05

Type	Lamps		Ballasts			System Watts	Comment
	Number	Designation	Number	Designation	Description		
	3	F25T8	1	ELECT HO	Electronic High Output	74	BF~1.05
	1	F25T8	1	ELECT DIM	Electronic Dimming	8~25	BF .05~.94
	2	F25T8	1	ELECT DIM	Electronic Dimming	13~49	BF .05~.94
	3	F25T8	1	ELECT DIM	Electronic Dimming	16~76	BF .05~.94
	4	F25T8	1	ELECT DIM	Electronic Dimming	22~96	BF .05~.88
Electronic Ballasts *cont.*							
4 foot Fluorescent Rapid Start T12 for T-8 ballasts ("Energy Saving" 25W)	1	F25T12ES	1	ELECT NO	Electronic Normal Output	27	
	2	F25T12ES	1	ELECT NO	Electronic Normal Output	52	
	3	F25T12ES	1	ELECT NO	Electronic Normal Output	77	
	4	F25T12ES	1	ELECT NO	Electronic Normal Output	95	
4 foot Fluorescent Instant Start T8 ("Energy Saving" 30W)	1	F32T8/30ES	1	ELECT NO	Electronic Normal Output	29	
	2	F32T8/30ES	1	ELECT NO	Electronic Normal Output	54	
	3	F32T8/30ES	1	ELECT NO	Electronic Normal Output	79	
	4	F32T8/30ES	1	ELECT NO	Electronic Normal Output	104	
	1	F32T8/30ES	1	ELECT RO	Electronic Reduced Output	27	
	2	F32T8/30ES	1	ELECT RO	Electronic Reduced Output	48	
	3	F32T8/30ES	1	ELECT RO	Electronic Reduced Output	70	
	4	F32T8/30ES	1	ELECT RO	Electronic Reduced Output	91	
	1	F32T8/30ES	1	ELECT NO EE	EE Normal Output	33	
	2	F32T8/30ES	1	ELECT NO EE	Energy efficiency Normal Output	52	
	3	F32T8/30ES	1	ELECT NO EE	Energy efficiency Normal Output	77	
	4	F32T8/30ES	1	ELECT NO EE	Energy efficiency Normal Output	101	
	1	F32T8/30ES	1	ELECT RO EE	EE Reduced Output	28	
	2	F32T8/30ES	1	ELECT RO EE	EE Reduced Output	45	

Type	Lamps		Ballasts			System Watts	Comment
	Number	Designation	Number	Designation	Description		
	3	F32T8/30ES	1	ELECT RO EE	EE Reduced Output	66	
	4	F32T8/30ES	1	ELECT RO EE	EE Reduced Output	88	
4 foot Fluorescent Rapid Start T8 (32W)	1	F32T8	0.5	MAG.	Mag. Energy Efficient	35	Tandem wired
	1	F32T8	1	MAG.	Mag. Energy Efficient	39	
	2	F32T8	1	MAG.	Mag. Energy Efficient	70	
4 foot Fluorescent Rapid Start T8 (32W) *cont.*	3	F32T8	1.5	MAG.	Mag. Energy Efficient	105	Tandem wired
	3	F32T8	2	MAG.	Mag. Energy Efficient	109	
	4	F32T8	2	MAG.	Mag. Energy Efficient	140	(2) two-lamp ballasts
4 foot Fluorescent Rapid Start T8 (32W)	1	F32T8	1	ELECT NO	Electronic Normal Output	32	
	2	F32T8	1	ELECT NO	Electronic Normal Output	62	
	3	F32T8	1	ELECT NO	Electronic Normal Output	93	
	4	F32T8	1	ELECT NO	Electronic Normal Output	114	
	1	F32T8	1	EE NO	EE Normal Output	35	
	2	F32T8	1	EE NO	EE Normal Output	55	
	3	F32T8	1	EE NO	EE Normal Output	82	
	4	F32T8	1	EE NO	EE Normal Output	107	
	1	F32T8	1	ELECT RO	Electronic Reduced Output	29	
	2	F32T8	1	ELECT RO	Electronic Reduced Output	51	
	3	F32T8	1	ELECT RO	Electronic Reduced Output	76	
	4	F32T8	1	ELECT RO	Electronic Reduced Output	98	
	2	F32T8	1	ELECT HO	Electronic High Output	77	BF~1.13
	3	F32T8	1	ELECT HO	Electronic High Output	112	BF~1.18
	1	F32T8	1	EE RO	EE Reduced Output	30	
	2	F32T8	1	EE RO	EE Reduced Output	48	
	3	F32T8	1	EE RO	EE Reduced Output	73	
	4	F32T8	1	EE RO	EE Reduced Output	96	

Type	Lamps		Ballasts			System Watts	Comment
	Number	Designation	Number	Designation	Description		
	2	F32T8	1	ELECT TL	Electronic Two Level (50 & 100%)	65	
	1	F32T8	1	ELECT DIM1	Electronic Dimming	9~35	BF .05~1.0
	2	F32T8	1	ELECT DIM1	Electronic Dimming	15~68	BF .05~1.0
	3	F32T8	1	ELECT DIM1	Electronic Dimming	20~102	BF .05~1.0
	1	F32T8	1	ELECT DIM2	Electronic Dimming	9~33	BF .05~.88
	2	F32T8	1	ELECT DIM2	Electronic Dimming	14~64	BF .05~.88
	3	F32T8	1	ELECT DIM2	Electronic Dimming	18~93	BF .05~.88
	4	F32T8	1	ELECT DIM2	Electronic Dimming	25~116	BF .05~.88
5 foot Fluorescent Rapid Start T8 (40W)	1	F40T8	1	MAG.	Mag. Energy Efficient	50	
	2	F40T8	1	MAG.	Mag. Energy Efficient	92	
	1	F40T8	1	ELECT	Electronic	46	
	2	F40T8	1	ELECT	Electronic	79	
	3	F40T8	1	ELECT	Electronic	112	
3 foot Fluorescent Rapid Start T12 (“Energy-Saving” 25W)	1	F30T12/ES	1	MAG STD	Mag. Stand.	42	
	2	F30T12/ES	1	MAG STD	Mag. Stand.	74	
	3	F30T12/ES	1.5	MAG STD	Mag. Stand.	111	Tandem wired
	3	F30T12/ES	2	MAG STD	Mag. Stand.	116	
	2	F30T12/ES	1	MAG.	Mag. Energy Efficient	66	
	1	F30T12/ES	1	ELECT	Electronic	26	
	2	F30T12/ES	1	ELECT	Electronic	53	
3 foot Fluorescent Rapid Start T12 (“Stand.” 30W)	1	F30T12	1	MAG STD	Mag. Stand.	46	
	2	F30T12	1	MAG STD	Mag. Stand.	79	
	3	F30T12	1.5	MAG STD	Mag. Stand.	118	Tandem wired
	3	F30T12	2	MAG STD	Mag. Stand.	125	
	2	F30T12	1	MAG.	Mag. Energy Efficient	73	
	1	F30T12	1	ELECT	Electronic	30	
	2	F30T12	1	ELECT	Electronic	60	
4 foot Fluorescent Rapid Start T12	1	F40T12/ES Plus	0.5	MAG.	Mag. Energy Efficient	34	Tandem wired

Type	Lamps		Ballasts			System Watts	Comment
	Number	Designation	Number	Designation	Description		
("Energy-Saving Plus"32W)	1	F40T12/ES Plus	1	MAG.	Mag. Energy Efficient	41	
	2	F40T12/ES Plus	1	MAG.	Mag. Energy Efficient	68	
	3	F40T12/ES Plus	1	MAG.	Mag. Energy Efficient	99	
	3	F40T12/ES Plus	1.5	MAG.	Mag. Energy Efficient	102	Tandem wired
	3	F40T12/ES Plus	2	MAG.	Mag. Energy Efficient	109	
	4	F40T12/ES Plus	2	MAG.	Mag. Energy Efficient	136	(2) Two-lamp ballasts

RO = ballast factor 70 to 85% NO = ballast factor 85 to 100% HO = ballast factor >100%

Table NB-9 – Fluorescent Rapid Start T-12

Type	Lamps		Ballasts			System Watts	Comment
	Number	Designation	Number	Designation	Description		
4 foot Fluorescent Rapid Start T12 ("Energy-Saving"34W)	1	F40T12/ES	0.5	MAG STD**	Mag. Stand.	42	Tandem wired
	1	F40T12/ES	1	MAG STD**	Mag. Stand.	48	
	2	F40T12/ES	1	MAG STD**	Mag. Stand.	82	
	3	F40T12/ES	1.5	MAG STD**	Mag. Stand.	122	Tandem wired
	3	F40T12/ES	2	MAG STD**	Mag. Stand.	130	
	4	F40T12/ES	2	MAG STD**	Mag. Stand.	164	(2) Two-lamp ballasts
	1	F40T12/ES	0.5	MAG.	Mag. Energy Efficient	36	Tandem wired
	1	F40T12/ES	1	MAG.	Mag. Energy Efficient	43	
	2	F40T12/ES	1	MAG.	Mag. Energy Efficient	72	
	3	F40T12/ES	1	MAG.	Mag. Energy Efficient	105	
	3	F40T12/ES	1.5	MAG.	Mag. Energy Efficient	108	Tandem wired
	3	F40T12/ES	2	MAG.	Mag. Energy Efficient	112	
	4	F40T12/ES	2	MAG.	Mag. Energy Efficient	144	(2) Two-lamp ballasts
	2	F40T12/ES	1	MAG HC	Mag. Heater Cutout	58	
	3	F40T12/ES	1.5	MAG HC	Mag. Heater Cutout	87	Tandem wired
	4	F40T12/ES	2	MAG HC	Mag. Heater Cutout	116	(2) Two-lamp ballasts
	2	F40T12/ES	1	MAG HC FO	Mag. Heater Cutout Full Light	66	
	3	F40T12/ES	1.5	MAG HC FO	Mag. Heater Cutout Full Light	99	Tandem wired
	4	F40T12/ES	2	MAG HC FO	Mag. Heater Cutout Full Light	132	(2) Two-lamp ballasts
	1	F40T12/ES	0.5	ELECT	Electronic	30	Tandem wired
	1	F40T12/ES	1	ELECT	Electronic	31	
	2	F40T12/ES	1	ELECT	Electronic	62	
	3	F40T12/ES	1	ELECT	Electronic	90	

Type	Lamps		Ballasts			System Watts	Comment
	Number	Designation	Number	Designation	Description		
	3	F40T12/ES	1.5	ELECT	Electronic	93	Tandem wired
	3	F40T12/ES	2	ELECT	Electronic	93	
	4	F40T12/ES	1	ELECT	Electronic	121	
	4	F40T12/ES	2	ELECT	Electronic	124	(2) Two-lamp ballasts
	2	F40T12/ES	1	ELECT AO	Elec. Adjustable Output (to 15%)	60	
	3	F40T12/ES	1.5	ELECT AO	Elec. Adjustable Output (to 15%)	90	Tandem wired
	4	F40T12/ES	2	ELECT AO	Elec. Adjustable Output (to 15%)	120	(2) Two-lamp ballasts
4 foot Fluorescent Rapid Start T12 ("Energy-Saving"34W) *cont.*							
4 foot Fluorescent Rapid Start Stand. (40W)	1	F40T12	0.5	MAG.	Mag. Energy Efficient	44	Tandem wired
	1	F40T12	1	MAG.	Mag. Energy Efficient	46	
	2	F40T12	1	MAG.	Mag. Energy Efficient	88	
	3	F40T12	1	MAG.	Mag. Energy Efficient	127	
	3	F40T12	1.5	MAG.	Mag. Energy Efficient	132	Tandem wired
	3	F40T12	2	MAG.	Mag. Energy Efficient	134	
	4	F40T12	2	MAG.	Mag. Energy Efficient	176	(2) Two-lamp ballasts
	2	F40T12	1	MAG HC	Mag. Heater Cutout	71	
	3	F40T12	1.5	MAG HC	Mag. Heater Cutout	107	Tandem wired
	4	F40T12	2	MAG HC	Mag. Heater Cutout	142	(2) Two-lamp ballasts
	2	ºF40T12	1	MAG ºF FO	Mag. Heater Cutout Full Light	80	
	3	ºF40T12	1.5	MAG ºF FO	Mag. Heater Cutout Full Light	120	Tandem wired

Type	Lamps		Ballasts			System Watts	Comment
	Number	Designation	Number	Designation	Description		
4 foot Fluorescent Rapid Start Stand. (40W) *cont.*	4	ºF40T12	2	MAG ºF FO	Mag. Heater Cutout Full Light	160	(2) Two-lamp ballasts
	1	ºF40T12	0.5	ELECT	Electronic	36	Tandem wired
	1	ºF40T12	1	ELECT	Electronic	37	
	2	ºF40T12	1	ELECT	Electronic	72	
	3	ºF40T12	1	ELECT	Electronic	107	
	3	ºF40T12	1.5	ELECT	Electronic	108	Tandem wired
	3	ºF40T12	2	ELECT	Electronic	109	
	4	ºF40T12	1	ELECT	Electronic	135	
	4	ºF40T12	2	ELECT	Electronic	144	(2) Two-lamp ballasts
	2	ºF40T12	1	ELECT RO	Electronic Reduce Output (75%)	61	
	3	ºF40T12	1	ELECT RO	Electronic Reduce Output (75%)	90	
	3	ºF40T12	1.5	ELECT RO	Electronic Reduce Output (75%)	92	Tandem wired
	4	ºF40T12	2	ELECT RO	Electronic Reduce Output (75%)	122	(2) Two-lamp ballasts
	2	ºF40T12	1	ELECT TL	Elec. Two Level (50 & 100%)	69	
	3	ºF40T12	1.5	ELECT TL	Elec. Two Level (50 & 100%)	104	Tandem wired
	4	ºF40T12	2	ELECT TL	Elec. Two Level (50 & 100%)	138	(2) Two-lamp ballasts
	2	ºF40T12	1	ELECT AO	Elec. Adjustable Output (to 15%)	73	
	3	ºF40T12	1.5	ELECT AO	Elec. Adjustable Output (to 15%)	110	Tandem wired
	4	ºF40T12	2	ELECT AO	Elec. Adjustable Output (to 15%)	146	(2) Two-lamp ballasts
	2	ºF40T12	1	ELECT DIM	Electronic Dimming (to 1%)	83	
	3	ºF40T12	1.5	ELECT DIM	Electronic Dimming (to 1%)	125	Tandem wired
	4	ºF40T12	2	ELECT DIM	Electronic Dimming (to 1%)	166	(2) Two-lamp ballasts

RO = ballast factor 70 to 85% NO = ballast factor 85 to 100% HO = ballast factor >100%

Table NB-10 – Fluorescent Rapid Start High Output (HO) T8 & T12, 8 ft

Type	Lamps		Ballasts			System Watts	Comment
	Number	Designation	Number	Designation	Description		
8 foot Fluorescent Rapid Start T8 High Output (86W)	1	F96T8/HO	1	ELECT	Electronic	88	
	2	F96T8/HO	1	ELECT	Electronic	160	
8 foot Fluorescent Rapid Start T12 High Output (“Energy-Saving” 95W)	1	F96T12/HO/ES	1	MAG STD	Mag. Stand.	125	
	2	F96T12/HO/ES	1	MAG STD**	Mag. Stand.	227	
	2	F96T12/HO/ES	1	MAG.	Mag. Energy Efficient	208	
	2	F96T12/HO/ES	1	ELECT	Electronic	170	
8 foot Fluorescent Rapid Start T12 High Output (“Stand.” 110W)	1	F96T12/HO	1	MAG STD	Mag. Stand.	140	
	2	F96T12/HO	1	MAG STD**	Mag. Stand.	252	
	2	F96T12/HO	1	MAG.	Mag. Energy Efficient	237	
	1	F96T12/HO	1	ELECT	Electronic	119	
	2	F96T12/HO	1	ELECT	Electronic	205	
8 foot Fluorescent Rapid Start T12 Very High Output (“Energy-Saving” 195W)	1	F96T12/VHO/ES	1	MAG STD	Mag. Stand.	200	
	2	F96T12/VHO/ES	1	MAG STD	Mag. Stand.	325	
8 foot Fluorescent Rapid Start T12 Very High Output (“Stand.” 215W)	1	Stand.96T12/VHO	1	MAG STAND.	Mag. Stand.	230	
	2	Stand.96T12/VHO	1	MAG STAND.	Mag. Stand.	440	

RO = ballast factor 70 to 85% NO = ballast factor 85 to 100% HO = ballast factor >100%

Table NB-11 – Fluorescent Instant Start (single pin base "Slimline") T12, 4 ft

Type	Lamps		Ballasts			System Watts	Comment
	Number	Designation	Number	Designation	Description		
4 foot Fluorescent Slimline Energy-Saving T12 (32W)	1	Stand.48T12/ES	1	MAG STAND.	Mag. Stand.	51	
	2	Stand.48T12/ES	1	MAG STAND.	Mag. Stand.	82	
4 foot Fluorescent Slimline Stand. Stand. (39W)	1	Stand.48T12	1	MAG Stand.	Mag. Stand.	59	
	2	Stand.48T12	1	MAG Stand.	Mag. Stand.	98	

RO = ballast factor 70 to 85% NO = ballast factor 85 to 100% HO = ballast factor >100%

Table NB-12 – Fluorescent Instant Start (single pin base "Slimline") T8 & T12, 8 ft.

Type	Lamps		Ballasts			System Watts	Comment
	Number	Designation	Number	Designation	Description		
8 foot Fluorescent T8 Slimline (59W)	1	F96T8	1	MAG.	Mag. Stand.	58	
	2	F96T8	1	MAG.	Mag. Stand.	120	
	2	F96T8	1	ELECT NO	Electronic Normal Output	110	
	1	F96T8	1	ELECT HO	Electronic High Output	72	BF~1.10
	2	F96T8	1	ELECT HO1	Electronic High Output	140	BF~1.10
	2	F96T8	1	ELECT HO2	Electronic High Output	151	BF~1.20
8 foot Fluorescent T12 Slimline (“Energy-Saving” 60W)	1	F96T12/ES	1	MAG STD	Mag. Stand.	74	
	2	F96T12/ES	1	MAG STD**	Mag. Stand.	131	
	2	F96T12/ES	1	MAG.	Mag. Energy Efficient	112	
	1	F96T12/ES	1	ELECT	Electronic	70	
	2	F96T12/ES	1	ELECT	Electronic	107	
8 foot Fluorescent T12 Slimline (“Stand.” 75W)	1	F96T12	1	MAG STD	Mag. Stand.	92	
	2	F96T12	1	MAG STD**	Mag. Stand.	158	
	2	F96T12	1	MAG.	Mag. Energy Efficient	144	
	1	F96T12	1	ELECT	Electronic	85	
	2	F96T12	1	ELECT	Electronic	132	

RO = ballast factor 70 to 85% NO = ballast factor 85 to 100% HO = ballast factor >100%

Table NB-13 – High Intensity Discharge

Type	Lamps		Ballasts			System Watts	Comment
	Number	Designation	Number	Designation	Description		
Mercury Vapor	1	H40	1	MAG STD	Mag. Stand.	51	
	1	H50	1	MAG STD	Mag. Stand.	63	
	1	H75	1	MAG STD	Mag. Stand.	88	
	1	H100	1	MAG STD	Mag. Stand.	119	
	1	H175	1	MAG STD	Mag. Stand.	197	
	1	H250	1	MAG STD	Mag. Stand.	285	
	1	H400	1	MAG STD	Mag. Stand.	450	
	1	H1000	1	MAG STD	Mag. Stand.	1080	
Metal Halide	1	M35/39	1	MAG STD	Mag. Stand.	48	
	1	M35/39	1	ELECT	Electronic	44	
	1	M50	1	MAG STD	Mag. Stand.	68	
	1	M50	1	ELECT	Electronic	58	
	1	M70	1	MAG STD	Mag. Stand.	92	
	1	M70	1	ELECT	Electronic	86	
	1	M100	1	MAG STD	Mag. Stand.	122	
	1	M100	1	ELECT	Electronic	110	
	1	M125	1	MAG STD	Mag. Stand.	150	
	1	M150	1	MAG STD	Mag. Stand.	186	
	1	M150	1	ELECT	Electronic	168	
	1	M175	1	MAG STD	Mag. Stand.	205	
	1	M200	1	MAG STD	Mag. Stand.	232	
	1	M225	1	MAG STD	Mag. Stand.	258	
	1	M250	1	MAG STD	Mag. Stand.	295	
	1	M320	1	MAG STD	Mag. Stand.	365	
	1	M320	1	MAG LR	277v Linear Reactor	345	
	1	M360	1	MAG STD	Mag. Stand.	422	
	1	M360	1	MAG LR	277v Linear Reactor	388	
	1	M400	1	MAG STD	Mag. Stand.	461	
	1	M400	1	MAG LR	277v Linear Reactor	426	
	1	M450	1	MAG STD	Mag. Stand.	502	
	1	M450	1	MAG LR	277v Linear Reactor	478	
	1	M750	1	MAG STD	Mag. Stand.	820	
	1	M900	1	MAG STD	Mag. Stand.	990	
	1	M1000	1	MAG STD	Mag. Stand.	1080	
	1	M1500	1	MAG STD	Mag. Stand.	1650	
	1	M1650	1	MAG STD	Mag. Stand.	1810	

Type	Lamps		Ballasts			System Watts	Comment
	Number	Designation	Number	Designation	Description		
High Pressure Sodium	1	S35	1	MAG STD	Mag. Stand.	44	
	1	S50	1	MAG STD	Mag. Stand.	61	
	1	S70	1	MAG STD	Mag. Stand.	93	
	1	S100	1	MAG STD	Mag. Stand.	116	
	1	S150	1	MAG STD	Mag. Stand.	173	
	1	S200	1	MAG STD	Mag. Stand.	240	
	1	S250	1	MAG STD	Mag. Stand.	302	
High Pressure Sodium *cont.*	1	S400	1	MAG STD	Mag. Stand.	469	
	1	S1000	1	MAG STD	Mag. Stand.	1090	
Low Pressure Sodium	1	LPS18	1	MAG STAND.	Mag. Stand.	30	
	1	LPS35	1	MAG STAND.	Mag. Stand.	60	
	1	LPS55	1	MAG STAND.	Mag. Stand.	80	
	1	LPS90	1	MAG STAND.	Mag. Stand.	125	
	1	LPS135	1	MAG STAND.	Mag. Stand.	178	
	1	LPS180	1	MAG STAND.	Mag. Stand.	220	

RO = ballast factor 70 to 85% NO = ballast factor 85 to 100% HO = ballast factor >100%

Table NB-14 – 12 Volt Tungsten Halogen Lamps Including MR16, Bi-pin, AR70, AR111, PAR36

Type	Lamps		Ballasts			System Watts	Comment
	Number	Designation	Number	Designation	Description		
	1	20 watt lamp	1	ELECT	Electronic Power Supply	23	
	1	25 watt lamp	1	ELECT	Electronic Power Supply	28	
	1	35 watt lamp	1	ELECT	Electronic Power Supply	38	
	1	37 watt lamp	1	ELECT	Electronic Power Supply	41	
	1	42 watt lamp	1	ELECT	Electronic Power Supply	45	
	1	50 watt lamp	1	ELECT	Electronic Power Supply	54	
	1	65 watt lamp	1	ELECT	Electronic Power Supply	69	
	1	71 watt lamp	1	ELECT	Electronic Power Supply	75	
	1	75 watt lamp	1	ELECT	Electronic Power Supply	80	
	1	100 watt lamp	1	ELECT	Electronic Power Supply	106	
	1	20 watt lamp	1	MAG	Mag. Transformer	24	
	1	25 watt lamp	1	MAG	Mag. Transformer	29	
	1	35 watt lamp	1	MAG	Mag. Transformer	39	
	1	37 watt lamp	1	MAG	Mag. Transformer	42	
	1	42 watt lamp	1	MAG	Mag. Transformer	46	
	1	50 watt lamp	1	MAG	Mag. Transformer	55	
	1	65 watt lamp	1	MAG	Mag. Transformer	70	
	1	71 watt lamp	1	MAG	Mag. Transformer	76	
	1	75 watt lamp	1	MAG	Mag. Transformer	81	
	1	100 watt lamp	1	MAG	Mag. Transformer	108	

~~Appendix B:~~

~~Materials Reference~~

Appendix B: Materials Reference

TABLE TITLE PAGE

Table B-1 ASHRAE THERMAL TRANSMISSION DATA AND PROPERTIES TABLES B-43

FRAMING CALCULATION APPROACHES/TABLES B-183

Table B-2 FRAMED WALL ASSEMBLY U-VALUES B-1714

Table B-3 METAL FRAMING FACTORS B-2017

Table B-4 PROPERTIES OF HOLLOW UNIT MASONRY WALLS B-218

Table B-5 PROPERTIES OF SOLID UNIT MASONRY AND SOLID CONCRETE WALLS B-2219

Table B-6 EFFECTIVE R-VALUES FOR INTERIOR INSULATION LAYERS ON STRUCTURAL MASS WALLS B-230

Table B-7 FRAMED WALL, FLOOR, /CEILING ASSEMBLIESY B-241

U-VALUE CALCULATION METHOD ASHRAE B-39

COMPUTER METHOD B-7445

Table B-8 DEFAULT FENESTRATION PRODUCT U-VALUES B-47

Table B-9 DEFAULT SOLAR HEAT GAIN COEFFICIENT B-51

Table B-810 FAN MOTOR MINIMUM MECHANICAL EQUIPMENT EFFICIENCIES B-7553

Table B-911 ILLUMINANCE CATEGORIES B-7761

~~Table B-102 DEFAULT LAMP/BALLAST POWERWATTAGES ..... B-8973~~

CHAPTER 24

THERMAL AND WATER VAPOR TRANSMISSION DATA

Building Envelopes 24.1
Calculating Overall Thermal Resistances 24.2
Mechanical and Industrial Systems 24.15
Calculating Heat Flow for Buried Pipelines 24.23

THIS chapter presents thermal and water vapor transmission data based on steady-state or equilibrium conditions. Chapter 3 covers heat transfer under transient or changing temperature conditions. Chapter 22 discusses selection of insulation materials and procedures for determining overall thermal resistances by simplified methods.

BUILDING ENVELOPES

Thermal Transmission Data for Building Components

The steady-state thermal resistances (R-values) of building components (walls, floors, windows, roof systems, etc.) can be calculated from the thermal properties of the materials in the component; or the heat flow through the assembled component can be measured directly with laboratory equipment such as the guarded hot box (ASTM *Standard* C 236) or the calibrated hot box (ASTM *Standard* C 976).

Tables 1 through 6 list thermal values, which may be used to calculate thermal resistances of building walls, floors, and ceilings. The values shown in these tables were developed under ideal conditions. In practice, overall thermal performance can be reduced significantly by such factors as improper installation and shrinkage, settling, or compression of the insulation (Tye and Desjarlais 1983; Tye 1985, 1986).

Most values in these tables were obtained by accepted ASTM test methods described in ASTM *Standards* C 177 and C 518 for materials and ASTM *Standards* C 236 and C 976 for building envelope components. Because commercially available materials vary, not all values apply to specific products.

The most accurate method of determining the overall thermal resistance for a combination of building materials assembled as a building envelope component is to test a representative sample by a hot box method. However, all combinations may not be conveniently or economically tested in this manner. For many simple constructions, calculated R-values agree reasonably well with values determined by hot box measurement.

The performance of materials fabricated in the field is especially subject to the quality of workmanship during construction and installation. Good workmanship becomes increasingly important as the insulation requirement becomes greater. Therefore, some engineers include additional insulation or other safety factors based on experience in their design.

Figure 1 shows how convection affects surface conductance of several materials. Other tests on smooth surfaces show that the average value of the convection part of the surface conductance decreases as the length of the surface increases.

Vapor retarders, which are discussed in Chapters 22 and 23, require special attention. Moisture from condensation or other sources may reduce the thermal resistance of insulation, but the effect of moisture must be determined for each material. For example, some materials with large air spaces are not affected significantly if the moisture content is less than 10% by weight, while the effect of moisture on other materials is approximately linear.

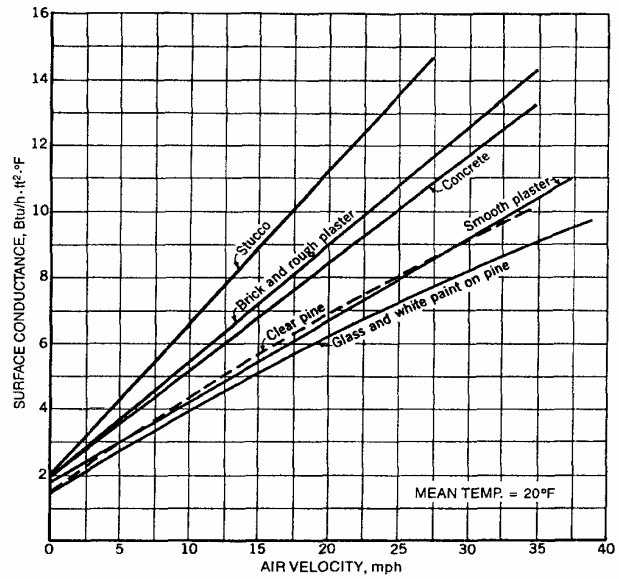

Fig. 1 Surface Conductance for Different Surfaces as Affected by Air Movement

Ideal conditions of components and installations are assumed in calculating overall R-values (i.e., insulating materials are of uniform nominal thickness and thermal resistance, air spaces are of uniform thickness and surface temperature, moisture effects are not involved, and installation details are in accordance with design). The National Institute of Standards and Technology Building Materials and Structures Report BMS 151 shows that measured values differ from calculated values for certain insulated constructions. For this reason, some engineers decrease the calculated R-values a moderate amount to account for departures of constructions from requirements and practices.

Tables 3 and 2 give values for well-sealed systems constructed with care. Field applications can differ substantially from laboratory test conditions. Air gaps in these insulation systems can seriously degrade thermal performance as a result of air movement due to both natural and forced convection. Sabine et al. (1975) found that the tabular values are not necessarily additive for multiple-layer, low-emittance air spaces, and tests on actual constructions should be conducted to accurately determine thermal resistance values.

Values for foil insulation products supplied by manufacturers must also be used with caution because they apply only to systems that are identical to the configuration in which the product was tested. In addition, surface oxidation, dust accumulation, condensation, and other factors that change the condition of the low-emittance surface can reduce the thermal effectiveness of

The preparation of this chapter is assigned to TC 4.4, Thermal Insulation and Moisture Retarders.

Table 1 Surface Conductances and Resistances for Air

Position of Surface	Direction of Heat Flow	Surface Emittance, ε: Non-reflective ε = 0.90 h_i	R	Reflective ε = 0.20 h_i	R	Reflective ε = 0.05 h_i	R
STILL AIR							
Horizontal	Upward	1.63	0.61	0.91	1.10	0.76	1.32
Sloping—45°	Upward	1.60	0.62	0.88	1.14	0.73	1.37
Vertical	Horizontal	1.46	0.68	0.74	1.35	0.59	1.70
Sloping—45°	Downward	1.32	0.76	0.60	1.67	0.45	2.22
Horizontal	Downward	1.08	0.92	0.37	2.70	0.22	4.55
MOVING AIR (Any position)		h_o	R				
15-mph Wind (for winter)	Any	6.00	0.17	—	—	—	—
7.5-mph Wind (for summer)	Any	4.00	0.25	—	—	—	—

Notes:
1. Surface conductance h_i and h_o measured in Btu/h·ft²·°F; resistance R in °F·ft²·h/Btu.
2. No surface has both an air space resistance value and a surface resistance value.
3. For ventilated attics or spaces above ceilings under summer conditions (heat flow down), see Table 5.
4. Conductances are for surfaces of the stated emittance facing virtual blackbody surroundings at the same temperature as the ambient air. Values are based on a surface-air temperature difference of 10°F and for surface temperatures of 70°F.
5. See Chapter 3 for more detailed information, especially Tables 5 and 6, and see Figure 1 for additional data.
6. Condensate can have a significant impact on surface emittance (see Table 2).

these insulation systems (Hooper and Moroz 1952). Deterioration results from contact with several types of solutions, either acidic or basic (e.g., wet cement mortar or the preservatives found in decay-resistant lumber). Polluted environments may cause rapid and severe material degradation. However, site inspections show a predominance of well-preserved installations and only a small number of cases in which rapid and severe deterioration has occurred. An extensive review of the reflective building insulation system performance literature is provided by Goss and Miller (1989).

CALCULATING OVERALL THERMAL RESISTANCES

Relatively small, highly conductive elements in an insulating layer called thermal bridges can substantially reduce the average thermal resistance of a component. Examples include wood and metal studs in frame walls, concrete webs in concrete masonry walls, and metal ties or other elements in insulated wall panels. The following examples illustrate the calculation of R-values and U-factors for components containing thermal bridges.

These conditions are assumed in calculating the design R-values:

- Equilibrium or steady-state heat transfer, disregarding effects of thermal storage
- Surrounding surfaces at ambient air temperature
- Exterior wind velocity of 15 mph for winter (surface with R = 0.17°F·ft²·h/Btu) and 7.5 mph for summer (surface with R = 0.25°F·ft²·h/Btu)
- Surface emittance of ordinary building materials is 0.90

Wood Frame Walls

The average overall R-values and U-factors of wood frame walls can be calculated by assuming either parallel heat flow paths through areas with different thermal resistances or by assuming isothermal planes. Equations (1) through (5) from Chapter 22 are used.

Table 2 Emittance Values of Various Surfaces and Effective Emittances of Air Spaces[a]

Surface	Average Emittance ε	Effective Emittance ε_{eff} of Air Space: One Surface Emittance ε; Other, 0.9	Both Surfaces Emittance ε
Aluminum foil, bright	0.05	0.05	0.03
Aluminum foil, with condensate just visible (> 0.7 gr/ft²)	0.30[b]	0.29	—
Aluminum foil, with condensate clearly visible (> 2.9 gr/ft²)	0.70[b]	0.65	—
Aluminum sheet	0.12	0.12	0.06
Aluminum coated paper, polished	0.20	0.20	0.11
Steel, galvanized, bright	0.25	0.24	0.15
Aluminum paint	0.50	0.47	0.35
Building materials: wood, paper, masonry, nonmetallic paints	0.90	0.82	0.82
Regular glass	0.84	0.77	0.72

[a]These values apply in the 4 to 40 μm range of the electromagnetic spectrum.
[b]Values are based on data presented by Bassett and Trethowen (1984).

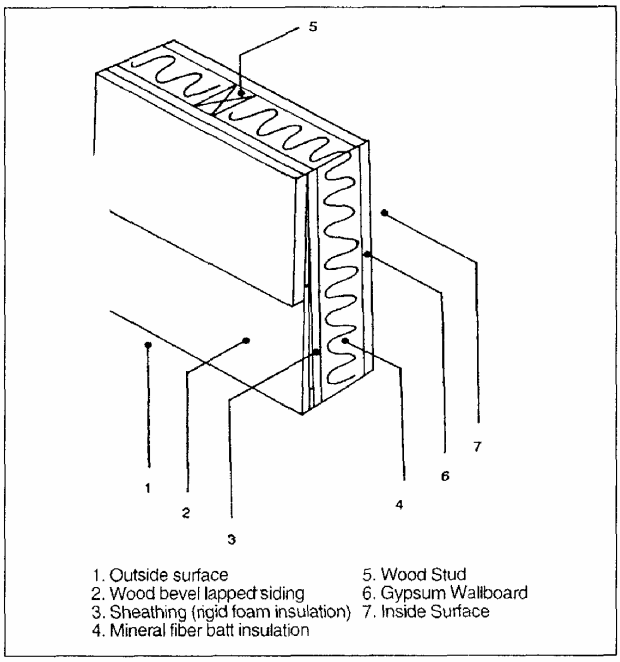

Fig. 2 Insulated Wood Frame Wall (Example 1)

The framing factor or fraction of the building component that is framing depends on the specific type of construction, and it may vary based on local construction practices—even for the same type of construction. For stud walls 16 in. on center (OC), the fraction of insulated cavity may be as low as 0.75, where the fraction of studs, plates, and sills is 0.21 and the fraction of headers is 0.04. For studs 24 in. OC, the respective values are 0.78, 0.18, and 0.04. These fractions contain an allowance for multiple studs, plates, sills, extra framing around windows, headers, and band joists. These assumed framing fractions are used in the following example, to illustrate the importance of including the effect of framing in determining the overall thermal conductance of a building. The actual framing fraction should be calculated for each specific construction.

Thermal and Water Vapor Transmission Data 24.3

Table 3 Thermal Resistances of Plane Air Spaces[a,b,c], °F·ft²·h/Btu

Position of Air Space	Direction of Heat Flow	Air Space Mean Temp.[d], °F	Air Space Temp. Diff.[d], °F	0.5-in. Air Space[c] Effective Emittance ε_{eff}[d,e] 0.03	0.05	0.2	0.5	0.82	0.75-in. Air Space[c] Effective Emittance ε_{eff}[d,e] 0.03	0.05	0.2	0.5	0.82
Horiz.	Up	90	10	2.13	2.03	1.51	0.99	0.73	2.34	2.22	1.61	1.04	0.75
		50	30	1.62	1.57	1.29	0.96	0.75	1.71	1.66	1.35	0.99	0.77
		50	10	2.13	2.05	1.60	1.11	0.84	2.30	2.21	1.70	1.16	0.87
		0	20	1.73	1.70	1.45	1.12	0.91	1.83	1.79	1.52	1.16	0.93
		0	10	2.10	2.04	1.70	1.27	1.00	2.23	2.16	1.78	1.31	1.02
		−50	20	1.69	1.66	1.49	1.23	1.04	1.77	1.74	1.55	1.27	1.07
		−50	10	2.04	2.00	1.75	1.40	1.16	2.16	2.11	1.84	1.46	1.20
45° Slope	Up	90	10	2.44	2.31	1.65	1.06	0.76	2.96	2.78	1.88	1.15	0.81
		50	30	2.06	1.98	1.56	1.10	0.83	1.99	1.92	1.52	1.08	0.82
		50	10	2.55	2.44	1.83	1.22	0.90	2.90	2.75	2.00	1.29	0.94
		0	20	2.20	2.14	1.76	1.30	1.02	2.13	2.07	1.72	1.28	1.00
		0	10	2.63	2.54	2.03	1.44	1.10	2.72	2.62	2.08	1.47	1.12
		−50	20	2.08	2.04	1.78	1.42	1.17	2.05	2.01	1.76	1.41	1.16
		−50	10	2.62	2.56	2.17	1.66	1.33	2.53	2.47	2.10	1.62	1.30
Vertical	Horiz.	90	10	2.47	2.34	1.67	1.06	0.77	3.50	3.24	2.08	1.22	0.84
		50	30	2.57	2.46	1.84	1.23	0.90	2.91	2.77	2.01	1.30	0.94
		50	10	2.66	2.54	1.88	1.24	0.91	3.70	3.46	2.35	1.43	1.01
		0	20	2.82	2.72	2.14	1.50	1.13	3.14	3.02	2.32	1.58	1.18
		0	10	2.93	2.82	2.20	1.53	1.15	3.77	3.59	2.64	1.73	1.26
		−50	20	2.90	2.82	2.35	1.76	1.39	2.90	2.83	2.36	1.77	1.39
		−50	10	3.20	3.10	2.54	1.87	1.46	3.72	3.60	2.87	2.04	1.56
45° Slope	Down	90	10	2.48	2.34	1.67	1.06	0.77	3.53	3.27	2.10	1.22	0.84
		50	30	2.64	2.52	1.87	1.24	0.91	3.43	3.23	2.24	1.39	0.99
		50	10	2.67	2.55	1.89	1.25	0.92	3.81	3.57	2.40	1.45	1.02
		0	20	2.91	2.80	2.19	1.52	1.15	3.75	3.57	2.63	1.72	1.26
		0	10	2.94	2.83	2.21	1.53	1.15	4.12	3.91	2.81	1.80	1.30
		−50	20	3.16	3.07	2.52	1.86	1.45	3.78	3.65	2.90	2.05	1.57
		−50	10	3.26	3.16	2.58	1.89	1.47	4.35	4.18	3.22	2.21	1.66
Horiz.	Down	90	10	2.48	2.34	1.67	1.06	0.77	3.55	3.29	2.10	1.22	0.85
		50	30	2.66	2.54	1.88	1.24	0.91	3.77	3.52	2.38	1.44	1.02
		50	10	2.67	2.55	1.89	1.25	0.92	3.84	3.59	2.41	1.45	1.02
		0	20	2.94	2.83	2.20	1.53	1.15	4.18	3.96	2.83	1.81	1.30
		0	10	2.96	2.85	2.22	1.53	1.16	4.25	4.02	2.87	1.82	1.31
		−50	20	3.25	3.15	2.58	1.89	1.47	4.60	4.41	3.36	2.28	1.69
		−50	10	3.28	3.18	2.60	1.90	1.47	4.71	4.51	3.42	2.30	1.71

Position of Air Space	Direction of Heat Flow	Air Space Mean Temp.[d], °F	Air Space Temp. Diff.[d], °F	1.5-in. Air Space[c] 0.03	0.05	0.2	0.5	0.82	3.5-in. Air Space[c] 0.03	0.05	0.2	0.5	0.82
Horiz.	Up	90	10	2.55	2.41	1.71	1.08	0.77	2.84	2.66	1.83	1.13	0.80
		50	30	1.87	1.81	1.45	1.04	0.80	2.09	2.01	1.58	1.10	0.84
		50	10	2.50	2.40	1.81	1.21	0.89	2.80	2.66	1.95	1.28	0.93
		0	20	2.01	1.95	1.63	1.23	0.97	2.25	2.18	1.79	1.32	1.03
		0	10	2.43	2.35	1.90	1.38	1.06	2.71	2.62	2.07	1.47	1.12
		−50	20	1.94	1.91	1.68	1.36	1.13	2.19	2.14	1.86	1.47	1.20
		−50	10	2.37	2.31	1.99	1.55	1.26	2.65	2.58	2.18	1.67	1.33
45° Slope	Up	90	10	2.92	2.73	1.86	1.14	0.80	3.18	2.96	1.97	1.18	0.82
		50	30	2.14	2.06	1.61	1.12	0.84	2.26	2.17	1.67	1.15	0.86
		50	10	2.88	2.74	1.99	1.29	0.94	3.12	2.95	2.10	1.34	0.96
		0	20	2.30	2.23	1.82	1.34	1.04	2.42	2.35	1.90	1.38	1.06
		0	10	2.79	2.69	2.12	1.49	1.13	2.98	2.87	2.23	1.54	1.16
		−50	20	2.22	2.17	1.88	1.49	1.21	2.34	2.29	1.97	1.54	1.25
		−50	10	2.71	2.64	2.23	1.69	1.35	2.87	2.79	2.33	1.75	1.39
Vertical	Horiz.	90	10	3.99	3.66	2.25	1.27	0.87	3.69	3.40	2.15	1.24	0.85
		50	30	2.58	2.46	1.84	1.23	0.90	2.67	2.55	1.89	1.25	0.91
		50	10	3.79	3.55	2.39	1.45	1.02	3.63	3.40	2.32	1.42	1.01
		0	20	2.76	2.66	2.10	1.48	1.12	2.88	2.78	2.17	1.51	1.14
		0	10	3.51	3.35	2.51	1.67	1.23	3.49	3.33	2.50	1.67	1.23
		−50	20	2.64	2.58	2.18	1.66	1.33	2.82	2.75	2.30	1.73	1.37
		−50	10	3.31	3.21	2.62	1.91	1.48	3.40	3.30	2.67	1.94	1.50
45° Slope	Down	90	10	5.07	4.55	2.56	1.36	0.91	4.81	4.33	2.49	1.34	0.90
		50	30	3.58	3.36	2.31	1.42	1.00	3.51	3.30	2.28	1.40	1.00
		50	10	5.10	4.66	2.85	1.60	1.09	4.74	4.36	2.73	1.57	1.08
		0	20	3.85	3.66	2.68	1.74	1.27	3.81	3.63	2.66	1.74	1.27
		0	10	4.92	4.62	3.16	1.94	1.37	4.59	4.32	3.02	1.88	1.34
		−50	20	3.62	3.50	2.80	2.01	1.54	3.77	3.64	2.90	2.05	1.57
		−50	10	4.67	4.47	3.40	2.29	1.70	4.50	4.32	3.31	2.25	1.68
Horiz.	Down	90	10	6.09	5.35	2.79	1.43	0.94	10.07	8.19	3.41	1.57	1.00
		50	30	6.27	5.63	3.18	1.70	1.14	9.60	8.17	3.86	1.88	1.22
		50	10	6.61	5.90	3.27	1.73	1.15	11.15	9.27	4.09	1.93	1.24
		0	20	7.03	6.43	3.91	2.19	1.49	10.90	9.52	4.87	2.47	1.62
		0	10	7.31	6.66	4.00	2.22	1.51	11.97	10.32	5.08	2.52	1.64
		−50	20	7.73	7.20	4.77	2.85	1.99	11.64	10.49	6.02	3.25	2.18
		−50	10	8.09	7.52	4.91	2.89	2.01	12.98	11.56	6.36	3.34	2.22

[a]See Chapter 22, section Factors Affecting Heat Transfer across Air Spaces. Thermal resistance values were determined from the relation, $R = 1/C$, where $C = h_c + \varepsilon_{eff} h_r$, h_c is the conduction-convection coefficient, $\varepsilon_{eff} h_r$ is the radiation coefficient $\approx 0.0068\varepsilon_{eff}[(t_m + 460)/100]^3$, and t_m is the mean temperature of the air space. Values for h_c were determined from data developed by Robinson et al. (1954). Equations (5) through (7) in Yarbrough (1983) show the data in this table in analytic form. For extrapolation from this table to air spaces less than 0.5 in. (as in insulating window glass), assume $h_c = 0.159(1 + 0.0016\, t_m)/l$ where l is the air space thickness in inches, and h_c is heat transfer through the air space only.

[b]Values are based on data presented by Robinson et al. (1954). (Also see Chapter 3, Tables 3 and 4, and Chapter 36). Values apply for ideal conditions, i.e., air spaces of uniform thickness bounded by plane, smooth, parallel surfaces with no air leakage to or from the space. When accurate values are required, use overall U-factors determined through calibrated hot box (ASTM C 976) or guarded hot box (ASTM C 236) testing. Thermal resistance values for multiple air spaces must be based on careful estimates of mean temperature differences for each air space.

[c]A single resistance value cannot account for multiple air spaces; each air space requires a separate resistance calculation that applies only for the established boundary conditions. Resistances of horizontal spaces with heat flow downward are substantially independent of temperature difference.

[d]Interpolation is permissible for other values of mean temperature, temperature difference, and effective emittance ε_{eff}. Interpolation and moderate extrapolation for air spaces greater than 3.5 in. are also permissible.

[e]Effective emittance ε_{eff} of the air space is given by $1/\varepsilon_{eff} = 1/\varepsilon_1 + 1/\varepsilon_2 - 1$, where ε_1 and ε_2 are the emittances of the surfaces of the air space (see Table 2).

Table 4 Typical Thermal Properties of Common Building and Insulating Materials—Design Values[a]

Description	Density, lb/ft³	Conductivity[b] (k), Btu·in / h·ft²·°F	Conductance (C), Btu / h·ft²·°F	Resistance[c] (R) Per Inch Thickness (1/k), °F·ft²·h / Btu·in	Resistance[c] (R) For Thickness Listed (1/C), °F·ft²·h / Btu	Specific Heat, Btu / lb·°F
BUILDING BOARD						
Asbestos-cement board	120	4.0	—	0.25	—	0.24
Asbestos-cement board ... 0.125 in.	120	—	33.00	—	0.03	
Asbestos-cement board ... 0.25 in.	120	—	16.50	—	0.06	
Gypsum or plaster board ... 0.375 in.	50	—	3.10	—	0.32	0.26
Gypsum or plaster board ... 0.5 in.	50	—	2.22	—	0.45	
Gypsum or plaster board ... 0.625 in.	50	—	1.78	—	0.56	
Plywood (Douglas Fir)[d]	34	0.80	—	1.25	—	0.29
Plywood (Douglas Fir) ... 0.25 in.	34	—	3.20	—	0.31	
Plywood (Douglas Fir) ... 0.375 in.	34	—	2.13	—	0.47	
Plywood (Douglas Fir) ... 0.5 in.	34	—	1.60	—	0.62	
Plywood (Douglas Fir) ... 0.625 in.	34	—	1.29	—	0.77	
Plywood or wood panels ... 0.75 in.	34	—	1.07	—	0.93	0.29
Vegetable fiber board						
Sheathing, regular density[e] ... 0.5 in.	18	—	0.76	—	1.32	0.31
... 0.78125 in.	18	—	0.49	—	2.06	
Sheathing intermediate density[e] ... 0.5 in.	22	—	0.92	—	1.09	0.31
Nail-base sheathing[e] ... 0.5 in.	25	—	0.94	—	1.06	0.31
Shingle backer ... 0.375 in.	18	—	1.06	—	0.94	0.31
Shingle backer ... 0.3125 in.	18	—	1.28	—	0.78	
Sound deadening board ... 0.5 in.	15	—	0.74	—	1.35	0.30
Tile and lay-in panels, plain or acoustic	18	0.40	—	2.50	—	0.14
... 0.5 in.	18	—	0.80	—	1.25	
... 0.75 in.	18	—	0.53	—	1.89	
Laminated paperboard	30	0.50	—	2.00	—	0.33
Homogeneous board from repulped paper	30	0.50	—	2.00	—	0.28
Hardboard[e]						
Medium density	50	0.73	—	1.37	—	0.31
High density, service-tempered grade and service grade	55	0.82	—	1.22	—	0.32
High density, standard-tempered grade	63	1.00	—	1.00	—	0.32
Particleboard[e]						
Low density	37	0.71	—	1.41	—	0.31
Medium density	50	0.94	—	1.06	—	0.31
High density	62	.5	1.18	—	0.85	—
Underlayment ... 0.625 in.	40	—	1.22	—	0.82	0.29
Waferboard	37	0.63	—	1.59	—	—
Wood subfloor ... 0.75 in.	—	—	1.06	—	0.94	0.33
BUILDING MEMBRANE						
Vapor—permeable felt	—	—	16.70	—	0.06	
Vapor—seal, 2 layers of mopped 15-lb felt	—	—	8.35	—	0.12	
Vapor—seal, plastic film	—	—	—	—	Negl.	
FINISH FLOORING MATERIALS						
Carpet and fibrous pad	—	—	0.48	—	2.08	0.34
Carpet and rubber pad	—	—	0.81	—	1.23	0.33
Cork tile ... 0.125 in.	—	—	3.60	—	0.28	0.48
Terrazzo ... 1 in.	—	—	12.50	—	0.08	0.19
Tile—asphalt, linoleum, vinyl, rubber	—	—	20.00	—	0.05	0.30
vinyl asbestos						0.24
ceramic						0.19
Wood, hardwood finish ... 0.75 in.	—	—	1.47	—	0.68	
INSULATING MATERIALS						
Blanket and Batt[f,g]						
Mineral fiber, fibrous form processed from rock, slag, or glass						
approx. 3-4 in.	0.4-2.0	—	0.091	—	11	
approx. 3.5 in.	0.4-2.0	—	0.077	—	13	
approx. 3.5 in.	1.2-1.6	—	0.067	—	15	
approx. 5.5-6.5 in.	0.4-2.0	—	0.053	—	19	
approx. 5.5 in.	0.6-1.0	—	0.048	—	21	
approx. 6-7.5 in.	0.4-2.0	—	0.045	—	22	
approx. 8.25-10 in.	0.4-2.0	—	0.033	—	30	
approx. 10-13 in.	0.4-2.0	—	0.026	—	38	
Board and Slabs						
Cellular glass	8.0	0.33	—	3.03	—	0.18
Glass fiber, organic bonded	4.0-9.0	0.25	—	4.00	—	0.23
Expanded perlite, organic bonded	1.0	0.36	—	2.78	—	0.30
Expanded rubber (rigid)	4.5	0.22	—	4.55	—	0.40
Expanded polystyrene, extruded (smooth skin surface) (CFC-12 exp.)	1.8-3.5	0.20	—	5.00	—	0.29

Thermal and Water Vapor Transmission Data 24.5

Table 4 Typical Thermal Properties of Common Building and Insulating Materials—Design Values[a] (Continued)

Description	Density, lb/ft³	Conductivity[b] (k), Btu·in / h·ft²·°F	Conductance (C), Btu / h·ft²·°F	Resistance[c] (R) Per Inch Thickness (1/k), °F·ft²·h / Btu·in	Resistance[c] (R) For Thickness Listed (1/C), °F·ft²·h / Btu	Specific Heat, Btu / lb·°F
Expanded polystyrene, extruded (smooth skin surface) (HCFC-142b exp.)[h]	1.8-3.5	0.20	—	5.00	—	0.29
Expanded polystyrene, molded beads	1.0	0.26	—	3.85	—	—
	1.25	0.25	—	4.00	—	—
	1.5	0.24	—	4.17	—	—
	1.75	0.24	—	4.17	—	—
	2.0	0.23	—	4.35	—	—
Cellular polyurethane/polyisocyanurate[i] (CFC-11 exp.) (unfaced)	1.5	0.16-0.18	—	6.25-5.56	—	0.38
Cellular polyisocyanurate[j] (CFC-11 exp.) (gas-permeable facers)	1.5-2.5	0.16-0.18	—	6.25-5.56	—	0.22
Cellular polyisocyanurate[j] (CFC-11 exp.) (gas-impermeable facers)	2.0	0.14	—	7.04	—	0.22
Cellular phenolic (closed cell) (CFC-11, CFC-113 exp.)[k]	3.0	0.12	—	8.20	—	—
Cellular phenolic (open cell)	1.8-2.2	0.23	—	4.40	—	—
Mineral fiber with resin binder	15.0	0.29	—	3.45	—	0.17
Mineral fiberboard, wet felted						
Core or roof insulation	16-17	0.34	—	2.94	—	—
Acoustical tile	18.0	0.35	—	2.86	—	0.19
Acoustical tile	21.0	0.37	—	2.70	—	—
Mineral fiberboard, wet molded						
Acoustical tile[l]	23.0	0.42	—	2.38	—	0.14
Wood or cane fiberboard						
Acoustical tile[l] 0.5 in.	—	—	0.80	—	1.25	0.31
Acoustical tile[l] 0.75 in.	—	—	0.53	—	1.89	—
Interior finish (plank, tile)	15.0	0.35	—	2.86	—	0.32
Cement fiber slabs (shredded wood with Portland cement binder)	25-27.0	0.50-0.53		2.0-1.89	—	
Cement fiber slabs (shredded wood with magnesia oxysulfide binder)	22.0	0.57	—	1.75	—	0.31
Loose Fill						
Cellulosic insulation (milled paper or wood pulp)	2.3-3.2	0.27-0.32	—	3.70-3.13	—	0.33
Perlite, expanded	2.0-4.1	0.27-0.31	—	3.7-3.3	—	0.26
	4.1-7.4	0.31-0.36	—	3.3-2.8	—	—
	7.4-11.0	0.36-0.42	—	2.8-2.4	—	—
Mineral fiber (rock, slag, or glass)[g]						
approx. 3.75-5 in.	0.6-2.0	—	—	—	11.0	0.17
approx. 6.5-8.75 in.	0.6-2.0	—	—	—	19.0	—
approx. 7.5-10 in.	0.6-2.0	—	—	—	22.0	—
approx. 10.25-13.75 in.	0.6-2.0	—	—	—	30.0	—
Mineral fiber (rock, slag, or glass)[g] approx. 3.5 in. (closed sidewall application)	2.0-3.5	—	—	—	12.0-14.0	—
Vermiculite, exfoliated	7.0-8.2	0.47	—	2.13	—	0.32
	4.0-6.0	0.44	—	2.27	—	—
Spray Applied						
Polyurethane foam	1.5-2.5	0.16-0.18	—	6.25-5.56	—	—
Ureaformaldehyde foam	0.7-1.6	0.22-0.28	—	4.55-3.57	—	—
Cellulosic fiber	3.5-6.0	0.29-0.34	—	3.45-2.94	—	—
Glass fiber	3.5-4.5	0.26-0.27	—	3.85-3.70	—	—
Reflective Insulation						
Reflective material ($\varepsilon < 0.5$) in center of 3/4 in. cavity forms two 3/8 in. vertical air spaces[m]	—	—	0.31	—	3.2	—
METALS (See Chapter 36, Table 3)						
ROOFING						
Asbestos-cement shingles	120	—	4.76	—	0.21	0.24
Asphalt roll roofing	70	—	6.50	—	0.15	0.36
Asphalt shingles	70	—	2.27	—	0.44	0.30
Built-up roofing 0.375 in.	70	—	3.00	—	0.33	0.35
Slate 0.5 in.	—	—	20.00	—	0.05	0.30
Wood shingles, plain and plastic film faced	—	—	1.06	—	0.94	0.31
PLASTERING MATERIALS						
Cement plaster, sand aggregate	116	5.0	—	0.20	—	0.20
Sand aggregate 0.375 in.	—	—	13.3	—	0.08	0.20
Sand aggregate 0.75 in.	—	—	6.66	—	0.15	0.20

Table 4 Typical Thermal Properties of Common Building and Insulating Materials—Design Values[a] (Continued)

Description	Density, lb/ft³	Conductivity[b] (k), Btu·in / h·ft²·°F	Conductance (C), Btu / h·ft²·°F	Resistance[c] (R) Per Inch Thickness (1/k), °F·ft²·h / Btu·in	Resistance[c] (R) For Thickness Listed (1/C), °F·ft²·h / Btu	Specific Heat, Btu / lb·°F
Gypsum plaster:						
Lightweight aggregate ..... 0.5 in.	45	—	3.12	—	0.32	—
Lightweight aggregate ..... 0.625 in.	45	—	2.67	—	0.39	—
Lightweight aggregate on metal lath ..... 0.75 in.	—	—	2.13	—	0.47	—
Perlite aggregate	45	1.5	—	0.67	—	0.32
Sand aggregate	105	5.6	—	0.18	—	0.20
Sand aggregate ..... 0.5 in.	105	—	11.10	—	0.09	—
Sand aggregate ..... 0.625 in.	105	—	9.10	—	0.11	—
Sand aggregate on metal lath ..... 0.75 in.	—	—	7.70	—	0.13	—
Vermiculite aggregate	45	1.7	—	0.59	—	—
MASONRY MATERIALS						
Masonry Units						
Brick, fired clay	150	8.4-10.2	—	0.12-0.10	—	—
	140	7.4-9.0	—	0.14-0.11	—	—
	130	6.4-7.8	—	0.16-0.12	—	—
	120	5.6-6.8	—	0.18-0.15	—	0.19
	110	4.9-5.9	—	0.20-0.17	—	—
	100	4.2-5.1	—	0.24-0.20	—	—
	90	3.6-4.3	—	0.28-0.24	—	—
	80	3.0-3.7	—	0.33-0.27	—	—
	70	2.5-3.1	—	0.40-0.33	—	—
Clay tile, hollow						
1 cell deep ..... 3 in.	—	—	1.25	—	0.80	0.21
1 cell deep ..... 4 in.	—	—	0.90	—	1.11	—
2 cells deep ..... 6 in.	—	—	0.66	—	1.52	—
2 cells deep ..... 8 in.	—	—	0.54	—	1.85	—
2 cells deep ..... 10 in.	—	—	0.45	—	2.22	—
3 cells deep ..... 12 in.	—	—	0.40	—	2.50	—
Concrete blocks[n, o]						
Limestone aggregate						
8 in., 36 lb, 138 lb/ft³ concrete, 2 cores	—	—	—	—	—	—
Same with perlite filled cores	—	—	0.48	—	2.1	—
12 in., 55 lb, 138 lb/ft³ concrete, 2 cores	—	—	—	—	—	—
Same with perlite filled cores	—	—	0.27	—	3.7	—
Normal weight aggregate (sand and gravel)						
8 in., 33-36 lb, 126-136 lb/ft³ concrete, 2 or 3 cores	—	—	0.90-1.03	—	1.11-0.97	0.22
Same with perlite filled cores	—	—	0.50	—	2.0	—
Same with vermiculite filled cores	—	—	0.52-0.73	—	1.92-1.37	—
12 in., 50 lb, 125 lb/ft³ concrete, 2 cores	—	—	0.81	—	1.23	0.22
Medium weight aggregate (combinations of normal weight and lightweight aggregate)						
8 in., 26-29 lb, 97-112 lb/ft³ concrete, 2 or 3 cores..	—	—	0.58-0.78	—	1.71-1.28	—
Same with perlite filled cores	—	—	0.27-0.44	—	3.7-2.3	—
Same with vermiculite filled cores	—	—	0.30	—	3.3	—
Same with molded EPS (beads) filled cores	—	—	0.32	—	3.2	—
Same with molded EPS inserts in cores	—	—	0.37	—	2.7	—
Lightweight aggregate (expanded shale, clay, slate or slag, pumice)						
6 in., 16-17 lb 85-87 lb/ft³ concrete, 2 or 3 cores	—	—	0.52-0.61	—	1.93-1.65	—
Same with perlite filled cores	—	—	0.24	—	4.2	—
Same with vermiculite filled cores	—	—	0.33	—	3.0	—
8 in., 19-22 lb, 72-86 lb/ft³ concrete	—	—	0.32-0.54	—	3.2-1.90	0.21
Same with perlite filled cores	—	—	0.15-0.23	—	6.8-4.4	—
Same with vermiculite filled cores	—	—	0.19-0.26	—	5.3-3.9	—
Same with molded EPS (beads) filled cores	—	—	0.21	—	4.8	—
Same with UF foam filled cores	—	—	0.22	—	4.5	—
Same with molded EPS inserts in cores	—	—	0.29	—	3.5	—
12 in., 32-36 lb, 80-90 lb/ft³ concrete, 2 or 3 cores...	—	—	0.38-0.44	—	2.6-2.3	—
Same with perlite filled cores	—	—	0.11-0.16	—	9.2-6.3	—
Same with vermiculite filled cores	—	—	0.17	—	5.8	—
Stone, lime, or sand	180	72	—	0.01	—	—
Quartzitic and sandstone	160	43	—	0.02	—	—
	140	24	—	0.04	—	—
	120	13	—	0.08	—	0.19
Calcitic, dolomitic, limestone, marble, and granite	180	30	—	0.03	—	—
	160	22	—	0.05	—	—
	140	16	—	0.06	—	—
	120	11	—	0.09	—	0.19
	100	8	—	0.13	—	—

Thermal and Water Vapor Transmission Data 24.7

Table 4 Typical Thermal Properties of Common Building and Insulating Materials—Design Values[a] (Continued)

Description	Density, lb/ft³	Conductivity[b] (k), Btu·in / h·ft²·°F	Conductance (C), Btu / h·ft²·°F	Resistance[c] (R) Per Inch Thickness (1/k), °F·ft²·h / Btu·in	Resistance[c] (R) For Thickness Listed (1/C), °F·ft²·h / Btu	Specific Heat, Btu / lb·°F
Gypsum partition tile						
3 by 12 by 30 in., solid	—	—	0.79	—	1.26	0.19
3 by 12 by 30 in., 4 cells	—	—	0.74	—	1.35	—
4 by 12 by 30 in., 3 cells	—	—	0.60	—	1.67	—
Concretes[o]						
Sand and gravel or stone aggregate concretes (concretes	150	10.0-20.0	—	0.10-0.05	—	—
with more than 50% quartz or quartzite sand have	140	9.0-18.0	—	0.11-0.06	—	0.19-0.24
conductivities in the higher end of the range)	130	7.0-13.0	—	0.14-0.08	—	—
Limestone concretes	140	11.1	—	0.09	—	—
	120	7.9	—	0.13	—	—
	100	5.5	—	0.18	—	—
Gypsum-fiber concrete (87.5% gypsum, 12.5% wood chips)	51	1.66	—	0.60	—	0.21
Cement/lime, mortar, and stucco	120	9.7	—	0.10	—	—
	100	6.7	—	0.15	—	—
	80	4.5	—	0.22	—	—
Lightweight aggregate concretes						
Expanded shale, clay, or slate; expanded slags;	120	6.4-9.1	—	0.16-0.11	—	—
cinders; pumice (with density up to 100 lb/ft³); and	100	4.7-6.2	—	0.21-0.16	—	0.20
scoria (sanded concretes have conductivities in the	80	3.3-4.1	—	0.30-0.24	—	0.20
higher end of the range)	60	2.1-2.5	—	0.48-0.40	—	—
	40	1.3	—	0.78	—	—
Perlite, vermiculite, and polystyrene beads	50	1.8-1.9	—	0.55-0.53	—	—
	40	1.4-1.5	—	0.71-0.67	—	0.15-0.23
	30	1.1	—	0.91	—	—
	20	0.8	—	1.25	—	—
Foam concretes	120	5.4	—	0.19	—	—
	100	4.1	—	0.24	—	—
	80	3.0	—	0.33	—	—
	70	2.5	—	0.40	—	—
Foam concretes and cellular concretes	60	2.1	—	0.48	—	—
	40	1.4	—	0.71	—	—
	20	0.8	—	1.25	—	—
SIDING MATERIALS (on flat surface)						
Shingles						
Asbestos-cement	120	—	4.75	—	0.21	—
Wood, 16 in., 7.5 exposure	—	—	1.15	—	0.87	0.31
Wood, double, 16-in., 12-in. exposure	—	—	0.84	—	1.19	0.28
Wood, plus ins. backer board, 0.312 in.	—	—	0.71	—	1.40	0.31
Siding						
Asbestos-cement, 0.25 in., lapped	—	—	4.76	—	0.21	0.24
Asphalt roll siding	—	—	6.50	—	0.15	0.35
Asphalt insulating siding (0.5 in. bed.)	—	—	0.69	—	1.46	0.35
Hardboard siding, 0.4375 in.	—	—	1.49	—	0.67	0.28
Wood, drop, 1 by 8 in.	—	—	1.27	—	0.79	0.28
Wood, bevel, 0.5 by 8 in., lapped	—	—	1.23	—	0.81	0.28
Wood, bevel, 0.75 by 10 in., lapped	—	—	0.95	—	1.05	0.28
Wood, plywood, 0.375 in., lapped	—	—	1.69	—	0.59	0.29
Aluminum, steel, or vinyl[p,q], over sheathing						
Hollow-backed	—	—	1.64	—	0.61	0.29[q]
Insulating-board backed nominal 0.375 in.	—	—	0.55	—	1.82	0.32
Insulating-board backed nominal 0.375 in., foil backed	—	—	0.34	—	2.96	—
Architectural (soda-lime float) glass	158	6.9	—	—	—	0.21
WOODS (12% moisture content)[e,r]						
Hardwoods						0.39[s]
Oak	41.2-46.8	1.12-1.25	—	0.89-0.80	—	
Birch	42.6-45.4	1.16-1.22	—	0.87-0.82	—	
Maple	39.8-44.0	1.09-1.19	—	0.92-0.84	—	
Ash	38.4-41.9	1.06-1.14	—	0.94-0.88	—	
Softwoods						0.39[s]
Southern Pine	35.6-41.2	1.00-1.12	—	1.00-0.89	—	
Douglas Fir-Larch	33.5-36.3	0.95-1.01	—	1.06-0.99	—	
Southern Cypress	31.4-32.1	0.90-0.92	—	1.11-1.09	—	
Hem-Fir, Spruce-Pine-Fir	24.5-31.4	0.74-0.90	—	1.35-1.11	—	
West Coast Woods, Cedars	21.7-31.4	0.68-0.90	—	1.48-1.11	—	
California Redwood	24.5-28.0	0.74-0.82	—	1.35-1.22	—	

Notes for Table 4

[a]Values are for a mean temperature of 75°F. Representative values for dry materials are intended as design (not specification) values for materials in normal use. Thermal values of insulating materials may differ from design values depending on their in-situ properties (e.g., density and moisture content, orientation, etc.) and variability experienced during manufacture. For properties of a particular product, use the value supplied by the manufacturer or by unbiased tests.

[b]To obtain thermal conductivities in Btu/h·ft·°F, divide the *k*-factor by 12 in/ft.

[c]Resistance values are the reciprocals of *C* before rounding off *C* to two decimal places.

[d]Lewis (1967).

[e]U.S. Department of Agriculture (1974).

[f]Does not include paper backing and facing, if any. Where insulation forms a boundary (reflective or otherwise) of an airspace, see Tables 2 and 3 for the insulating value of an airspace with the appropriate effective emittance and temperature conditions of the space.

[g]Conductivity varies with fiber diameter. (See Chapter 22, Factors Affecting Thermal Performance.) Batt, blanket, and loose-fill mineral fiber insulations are manufactured to achieve specified R-values, the most common of which are listed in the table. Due to differences in manufacturing processes and materials, the product thicknesses, densities, and thermal conductivities vary over considerable ranges for a specified R-value.

[h]This material is relatively new and data are based on limited testing.

[i]For additional information, see Society of Plastics Engineers (SPI) *Bulletin* U108. Values are for aged, unfaced board stock. For change in conductivity with age of expanded polyurethane/polyisocyanurate, see Chapter 22, Factors Affecting Thermal Performance.

[j]Values are for aged products with gas-impermeable facers on the two major surfaces. An aluminum foil facer of 0.001 in. thickness or greater is generally considered impermeable to gases. For change in conductivity with age of expanded polyisocyanurate, see Chapter 22, Factors Affecting Thermal Performance, and SPI *Bulletin* U108.

[k]Cellular phenolic insulation may no longer be manufactured. The thermal conductivity and resistance values do not represent aged insulation, which may have a higher thermal conductivity and lower thermal resistance.

[l]Insulating values of acoustical tile vary, depending on density of the board and on type, size, and depth of perforations.

[m]Cavity is framed with 0.75 in. wood furring strips. Caution should be used in applying this value for other framing materials. The reported value was derived from tests and applies to the reflective path only. The effect of studs or furring strips must be included in determining the overall performance of the wall.

[n]Values for fully grouted block may be approximated using values for concrete with a similar unit weight.

[o]Values for concrete block and concrete are at moisture contents representative of normal use.

[p]Values for metal or vinyl siding applied over flat surfaces vary widely, depending on amount of ventilation of airspace beneath the siding; whether airspace is reflective or nonreflective; and on thickness, type, and application of insulating backing used. Values are averages for use as design guides, and were obtained from several guarded hot box tests (ASTM C 236) or calibrated hot box (ASTM C 976) on hollow-backed types and types made using backing-boards of wood fiber, foamed plastic, and glass fiber. Departures of ±50% or more from these values may occur.

[q]Vinyl specific heat = 0.25 Btu/lb·°F

[r]See Adams (1971), MacLean (1941), and Wilkes (1979). The conductivity values listed are for heat transfer across the grain. The thermal conductivity of wood varies linearly with the density, and the density ranges listed are those normally found for the wood species given. If the density of the wood species is not known, use the mean conductivity value. For extrapolation to other moisture contents, the following empirical equation developed by Wilkes (1979) may be used:

$$k = 0.1791 + \frac{(1.874 \times 10^{-2} + 5.753 \times 10^{-4} M)\rho}{1 + 0.01M}$$

where ρ is density of the moist wood in lb/ft^3, and *M* is the moisture content in percent.

[s]From Wilkes (1979), an empirical equation for the specific heat of moist wood at 75°F is as follows:

$$c_p = \frac{(0.299 + 0.01M)}{(1 + 0.01M)} + \Delta c_p$$

where Δc_p accounts for the heat of sorption and is denoted by

$$\Delta c_p = M(1.921 \times 10^{-3} - 3.168 \times 10^{-5} M)$$

where *M* is the moisture content in percent by mass.

Example 1. Calculate the U-factor of the 2 by 4 stud wall shown in Figure 2. The studs are at 16 in. OC. There is 3.5 in. mineral fiber batt insulation (R-13) in the stud space. The inside finish is 0.5 in. gypsum wallboard; the outside is finished with rigid foam insulating sheathing (R-4) and 0.5 in. by 8 in. wood bevel lapped siding. The insulated cavity occupies approximately 75% of the transmission area; the studs, plates, and sills occupy 21%; and the headers occupy 4%.

Solution. Obtain the R-values of the various building elements from Tables 1 and 4. Assume the R = 1.25 per inch for the wood framing. Also, assume the headers are solid wood, in this case, and group them with the studs, plates, and sills.

Element	*R* (Insulated Cavity)	*R* (Studs, Plates, and Headers)
1. Outside surface, 15 mphwind	0.17	0.17
2. Wood bevel lapped siding	0.81	0.81
3. Rigid foam insulating sheathing	4.0	4.0
4. Mineral fiber batt insulation, 3.5 in.	13.0	—
5. Wood stud, nominal 2 × 4	—	4.38
6. Gypsum wallboard, 0.5 in.	0.45	0.45
7. Inside surface, still air	0.68	0.68
	R_1 = 19.11	R_2 = 10.49

Since the U-factor is the reciprocal of R-value, U_1 = 0.052 and U_2 = 0.095 Btu/h·ft^2·°F.

If the wood framing (thermal bridging) is not included, Equation (3) from Chapter 22 may be used to calculate the U-factor of the wall as follows:

$$U_{av} = U_1 = \frac{1}{R_1} = 0.052 \text{ Btu/h} \cdot \text{ft}^2 \cdot {}^\circ\text{F}$$

If the wood framing is accounted for using the parallel-path flow method, the U-factor of the wall is determined using Equation (5) from Chapter 22 as follows:

$$U_{av} = (0.75 \times 0.052) + (0.25 \times 0.095) = 0.063 \text{ Btu/h} \cdot \text{ft}^2 \cdot {}^\circ\text{F}$$

If the wood framing is included using the isothermal planes method, the U-factor of the wall is determined using Equations (2) and (3) from Chapter 22 as follows:

$$R_{T(av)} = 4.98 + 1/[(0.75/13.0) + (0.25/4.38)] + 1.13$$

$$= 14.82 {}^\circ\text{F} \cdot \text{ft}^2 \cdot \text{h/Btu}$$

$$U_{av} = 0.067 \text{ Btu/h} \cdot \text{ft}^2 \cdot {}^\circ\text{F}$$

For a frame wall with a 24-in. OC stud space, the average overall R-value is 15.18°F·ft^2·h/Btu. Similar calculation procedures may be used to evaluate other wall designs, except those with thermal bridges.

Masonry Walls

The average overall R-values of masonry walls can be estimated by assuming a combination of layers in series, one or more of which provides parallel paths. This method is used because heat flows laterally through block face shells so that transverse isothermal planes result. Average total resistance $R_{T(av)}$ is the sum of the resistances of

the layers between such planes, each layer calculated as shown in Example 2.

Example 2. Calculate the overall thermal resistance and average U-factor of the 7-5/8-in. thick insulated concrete block wall shown in Figure 3. The two-core block has an average web thickness of 1-in. and a face shell thickness of 1-1/4-in. Overall block dimensions are 7-5/8 by 7-5/8 by 15-5/8 in. Measured thermal resistances of 112 lb/ft^3 concrete and 7 lb/ft^3 expanded perlite insulation are 0.10 and 2.90°F·ft^2·h/Btu per inch, respectively.

Solution. The equation used to determine the overall thermal resistance of the insulated concrete block wall is derived from Equations (2) and (5) from Chapter 22 and is given below:

$$R_{T(av)} = R_i + R_f + \left(\frac{a_w}{R_w} + \frac{a_c}{R_c}\right)^{-1} + R_o$$

where

$R_{T(av)}$ = overall thermal resistance based on assumption of isothermal planes
R_i = thermal resistance of inside air surface film (still air)
R_o = thermal resistance of outside air surface film (15 mph wind)
R_f = total thermal resistance of face shells
R_c = thermal resistance of cores between face shells
R_w = thermal resistance of webs between face shells
a_w = fraction of total area transverse to heat flow represented by webs of blocks
a_c = fraction of total area transverse to heat flow represented by cores of blocks

From the information given and the data in Table 1, determine the values needed to compute the overall thermal resistance.

R_i = 0.68
R_o = 0.17
R_f = (2)(1.25)(0.10) = 0.25
R_c = (5.125)(2.90) = 14.86
R_w = (5.125)(0.10) = 0.51
a_w = 3/15.625 = 0.192
a_c = 12.625/15.625 = 0.808

Using the equation given, the overall thermal resistance and average U-factor are calculated as follows:

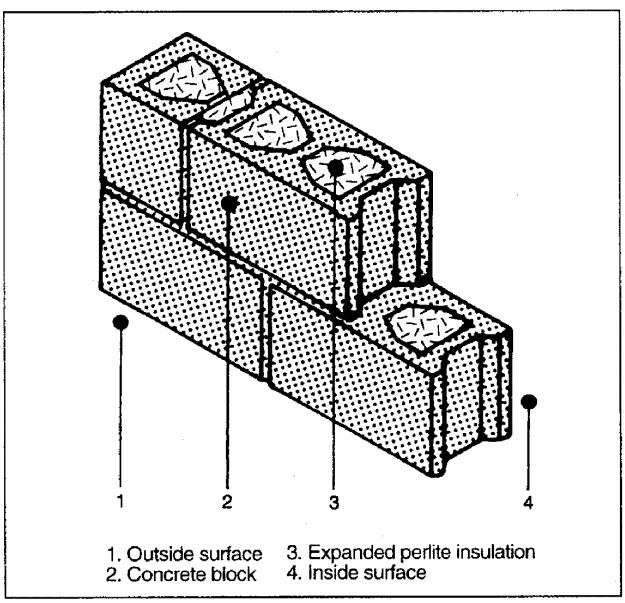

Fig. 3 Insulated Concrete Block Wall (Example 2)

$$R_{T(av)} = 0.68 + 0.25 + \frac{0.51 \times 14.86}{(0.808 \times 0.51) + (0.192 \times 14.86)} + 0.17$$

$$= 3.43°F \cdot ft^2 \cdot h/Btu$$

$$U_{av} = 1/3.43 = 0.29 \text{ Btu/h} \cdot ft^2 \cdot °F$$

Based on guarded hot box tests of this wall without mortar joints, Tye and Spinney (1980) measured the average R-value for this insulated concrete block wall as 3.13°F·ft^2·h/Btu.

Assuming parallel heat flow only, the calculated resistance is higher than that calculated on the assumption of isothermal planes. The actual resistance generally is some value between the two calculated values. In the absence of test values, examination of the construction usually reveals whether a value closer to the higher or lower calculated R-value should be used. Generally, if the construction contains a layer in which lateral conduction is high compared with transmittance through the construction, the calculation with isothermal planes should be used. If the construction has no layer of high lateral conductance, the parallel heat flow calculation should be used.

Hot box tests of insulated and uninsulated masonry walls constructed with block of conventional configuration show that thermal resistances calculated using the isothermal planes heat flow method agree well with measured values (Van Geem 1985, Valore 1980, Shu et al. 1979). Neglecting horizontal mortar joints in conventional block can result in thermal transmittance values up to 16% lower than actual, depending on the density and thermal properties of the masonry, and 1 to 6% lower, depending on the core insulation material (Van Geem 1985, McIntyre 1984). For aerated concrete block walls, other solid masonry, and multicore block walls with full mortar joints, neglecting mortar joints can cause errors in R-values up to 40% (Valore 1988). Horizontal mortar joints usually found in concrete block wall construction are neglected in Example 2.

Constructions Containing Metal

Curtain and metal stud-wall constructions often include metallic and other thermal bridges, which can significantly reduce the thermal resistance. However, the capacity of the adjacent facing materials to transmit heat transversely to the metal is limited, and some contact resistance between all materials in contact limits the reduction. Contact resistances in building structures are only 0.06 to 0.6°F·ft^2·h/Btu—too small to be of concern in many cases. However, the contact resistances of steel framing members may be important. Also, in many cases (as illustrated in Example 3), the area of metal in contact with the facing greatly exceeds the thickness of the metal, which mitigates the contact reistance effects.

Thermal characteristics for panels of sandwich construction can be computed by combining the thermal resistances of the various layers. However, few panels are true sandwich constructions; many have ribs and stiffeners that create complicated heat flow paths. R-values for the assembled sections should be determined on a representative sample by using a hot box method. If the sample is a wall section with air cavities on both sides of fibrous insulation, the sample must be of representative height since convective airflow can contribute significantly to heat flow through the test section. Computer modeling can also be useful, but all heat transfer mechanisms must be considered.

In Example 3, the metal member is only 0.020 in. thick, but it is in contact with adjacent facings over a 1.25 in.-wide area. The steel member is 3.50 in. deep, has a thermal resistance of approximately 0.011°F·ft^2·h/Btu, and is virtually isothermal. The calculation involves careful selection of the appropriate thickness for the steel member. If the member is assumed to be 0.020 in. thick, the fact that the flange transmits heat to the adjacent facing is ignored, and the heat flow through the steel is underestimated. If the member is assumed to be 1.25 in. thick, the heat flow through the steel is overestimated. In Example 3, the steel member behaves in much the

same way as a rectangular member 1.25 in. thick and 3.50 in. deep with a thermal resistance of $(1.25/0.020) \times 0.011 = 0.69°F \cdot ft^2 \cdot h/Btu$ does. The Building Research Association of New Zealand (BRANZ) commonly uses this approximation.

Example 3. Calculate the C-factor of the insulated steel frame wall shown in Figure 4. Assume that the steel member has an R-value of $0.69°F \cdot ft^2 \cdot h/Btu$ and that the framing behaves as though it occupies approximately 8% of the transmission area.

Solution. Obtain the R-values of the various building elements from Table 4.

Element	*R* (Insul.)	*R* (Framing)
1. 0.5-in. gypsum wallboard	0.45	0.45
2. 3.5-in. mineral fiber batt insulation	11	—
3. Steel framing member	—	0.69
4. 0.5-in. gypsum wallboard	0.45	0.45
	$R_1 = 11.90$	$R_2 = 1.59$

Therefore, $C_1 = 0.084$; $C_2 = 0.629$ Btu/h·ft²·°F.

If the steel framing (thermal bridging) is not considered, the C-factor of the wall is calculated using Equation (3) from Chapter 22 as follows:

$$C_{av} = C_1 = 1/R_1 = 0.084 \text{ Btu/h} \cdot \text{ft}^2 \cdot °\text{F}$$

If the steel framing is accounted for using the parallel flow method, the C-factor of the wall is determined using Equation (5) from Chapter 22 as follows:

$$C_{av} = (0.92 \times 0.084) + (0.08 \times 0.629)$$

$$= 0.128 \text{ Btu/h} \cdot \text{ft}^2 \cdot °\text{F}$$

$$R_{T(av)} = 7.81°\text{F} \cdot \text{ft}^2 \cdot \text{h/Btu}$$

If the steel framing is included using the isothermal planes method, the C-factor of the wall is determined using Equations (2) and (3) from Chapter 22 as follows:

$$R_{T(av)} = 0.45 + 1/[(0.92/11.00) + (0.08/0.69)] + 0.45$$

$$= 5.91°\text{F} \cdot \text{ft}^2 \cdot \text{h/Btu}$$

$$C_{av} = 0.169 \text{ Btu/h} \cdot \text{ft}^2 \cdot °\text{F}$$

For this insulated steel frame wall, Farouk and Larson (1983) measured an average R-value of $6.61°F \cdot ft^2 \cdot h/Btu$.

In ASHRAE/IESNA *Standard* 90.1-1989, one method given for determining the thermal resistance of wall assemblies containing metal framing involves using a parallel path correction factor F_c, which is listed in Table 8C-2 of the standard. For 2 by 4 steel framing, 16 in. OC, $F_c = 0.50$. Using the correction factor method, an R-value of $6.40°F \cdot ft^2 \cdot h/Btu$ [0.45 + 11(0.50) + 0.45] is obtained for the wall described in Example 3.

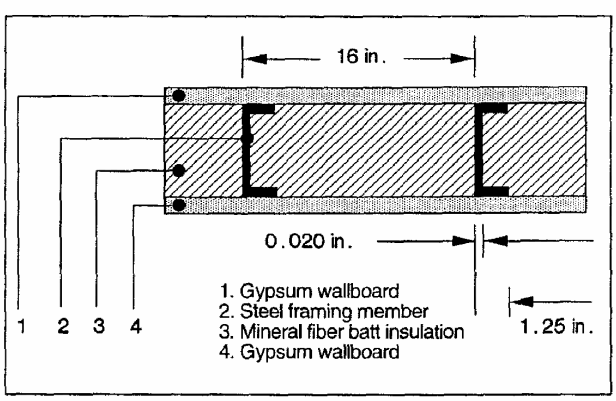

Fig. 4 Insulated Steel Frame Wall (Example 3)

Zone Method of Calculation

For structures with widely spaced metal members of substantial cross-sectional area, calculation by the isothermal planes method can result in thermal resistance values that are too low. For these constructions, the **zone method** can be used. This method involves two separate computations—one for a chosen limited portion, Zone A, containing the highly conductive element; the other for the remaining portion of simpler construction, Zone B. The two computations are then combined using the parallel flow method, and the average transmittance per unit overall area is calculated. The basic laws of heat transfer are applied by adding the area conductances *CA* of elements in parallel, and adding area resistances *R/A* of elements in series.

The surface shape of Zone A is determined by the metal element. For a metal beam (see Figure 5), the Zone A surface is a strip of width *W* that is centered on the beam. For a rod perpendicular to panel surfaces, it is a circle of diameter *W*. The value of *W* is calculated from Equation (1), which is empirical. The value of *d* should not be less than 0.5 in. for still air.

$$W = m + 2d \tag{1}$$

where

m = width or diameter of metal heat path terminal, in.
d = distance from panel surface to metal, in.

Generally, the value of *W* should be calculated using Equation (1) for each end of the metal heat path; the larger value, within the limits of the basic area, should be used as illustrated in Example 4.

Example 4. Calculate transmittance of the roof deck shown in Figure 5. Tee-bars at 24 in. OC support glass fiber form boards, gypsum concrete, and built-up roofing. Conductivities of components are: steel, 314.4 Btu·in/h·ft²·°F; gypsum concrete, 1.66 Btu·in/h·ft²·°F; and glass fiber form board, 0.25 Btu·in/h·ft²·°F. Conductance of built-up roofing is 3.00 Btu/h·ft²·°F.

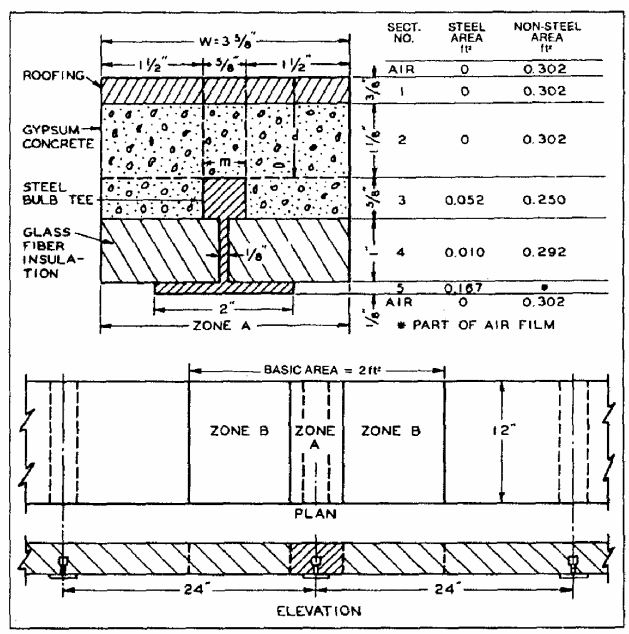

Fig. 5 Gypsum Roof Deck on Bulb Tees (Example 4)

Solution. The basic area is 2 ft^2 (24 in. by 12 in.) with a tee-bar (12 in. long) across the middle. This area is divided into Zones A and B.

Zone A is determined from Equation (1) as follows:

$$\text{Top side } W = m + 2d = 0.625 + (2 \times 1.5) = 3.625 \text{ in.}$$
$$\text{Bottom side } W = m + 2d = 2.0 + (2 \times 0.5) = 3.0 \text{ in.}$$

Using the larger value of W, the area of Zone A is $(12 \times 3.625)/144 = 0.302$ ft^2. The area of Zone B is $2.0 - 0.302 = 1.698$ ft^2.

To determine area transmittance for Zone A, divide the structure within the zone into five sections parallel to the top and bottom surfaces (Figure 5). The area conductance CA of each section is calculated by adding the area conductances of its metal and nonmetal paths. Area conductances of the sections are converted to area resistances R/A and added to obtain the total resistance of Zone A.

Section	Area × Conductance =	CA	$\frac{1}{CA} = \frac{R}{A}$
Air (outside, 15 mph)	0.302 × 6.00	1.81	0.55
No. 1, Roofing	0.302 × 3.00	0.906	1.10
No. 2, Gypsum concrete	0.302 × 1.66/1.125	0.446	2.24
No. 3, Steel	0.052 × 314.4/0.625	26.2	0.04
No. 3, Gypsum concrete	0.250 × 1.66/0.625	0.664	
No. 4, Steel	0.010 × 314.4/1.00	3.14	0.31
No. 4, Glass fiberboard	0.292 × 0.25/1.00	0.073	
No. 5, Steel	0.167 × 314.4/0.125	420.0	0.002
Air (inside)	0.302 × 1.63	0.492	2.03
		Total R/A = 6.27	

Area transmittance of Zone A = $1/(R/A) = 1/6.27 = 0.159$.

For Zone B, the unit resistances are added and then converted to area transmittance, as shown in the following table.

Section	Resistance, R
Air (outside, 15 mph)	1/6.00 = 0.17
Roofing	1/3.00 = 0.33
Gypsum concrete	1.75/1.66 = 1.05
Glass fiberboard	1.00/0.25 = 4.00
Air (inside)	1/1.63 = 0.61
Total resistance	= 6.16

Since unit transmittance = $1/R = 0.162$, the total area transmittance UA is calculated as follows:

$$\begin{aligned} \text{Zone B} = 1.698 \times 0.162 &= 0.275 \\ \text{Zone A} &= 0.159 \\ \text{Total area transmittance of basic area} &= 0.434 \\ \text{Transmittance per ft}^2 = 0.434/2.0 &= 0.217 \\ \text{Resistance per ft}^2 &= 4.61 \end{aligned}$$

Overall R-values of 4.57 and 4.85°F·ft^2·h/Btu have been measured in two guarded hot box tests of a similar construction.

When the steel member represents a relatively large proportion of the total heat flow path, as in Example 4, detailed calculations of resistance in sections 3, 4, and 5 of Zone A are unnecessary; if only the steel member is considered, the final result of Example 4 is the same. However, if the heat flow path represented by the steel member is small, as for a tie rod, detailed calculations for sections 3, 4, and 5 are necessary. A panel with an internal metallic structure and bonded on one or both sides to a metal skin or covering presents special problems of lateral heat flow not covered in the zone method.

Modified Zone Method for Metal Stud Walls with Insulated Cavities

The modified zone method is similar to the parallel path method and the zone method. All three methods are based on parallel-path calculations. Figure 6 shows the width w of the zone of thermal anomalies around a metal stud. This zone can be assumed to equal the length of the stud flange L (parallel path method), or can be calculated as a sum of the length of stud flange and a distance double that from wall surface to metal Σd_i (zone method). In the modified zone method the width of the zone depends on the following three parameters:

- Ratio between thermal resistivity of sheathing material and cavity insulation
- Size (depth) of stud
- Thickness of sheathing material

The Modified Zone Method is explained in Figure 6 (which can be copied and used as a calculation form). The wall cross section shown in Figure 6, is divided into two zones: the zone of thermal anomalies around metal stud w and the cavity zone cav. Wall material layers are grouped into an exterior and interior surface sections—A (sheathing, siding) and B (wallboard)—and interstitial sections I and II (cavity insulation, metal stud flange).

Assuming that the layers or layer of wall materials in wall section A are thicker than those in wall section B, as show by the cross section in Figure 6, they can be described as follows:

$$\sum_{i=1}^{n} d_i \geq \sum_{j=1}^{m} d_j \tag{2}$$

where

n = number of material layer (of thickness d_i) between metal stud flange and wall surface for section A

m = number of material layer (of thickness d_j) for section B

Then, the width of the zone of thermal anomalies around the metal stud w can be estimated by

$$w = L + z_f \sum_{i=1}^{n} d_i \tag{3}$$

where

L = stud flange size,

d_i = thickness of material layer in section A

z_f = zone factor, which is shown in Figure 7 ($z_f = 2$ for zone method)

Kosny and Christian (1995) verified the accuracy of the Modified Zone Method for over 200 simulated cases of metal frame walls with insulated cavities. For all configurations considered the discrepancy between results were within ±2%. Hot box measured R-values for 15 metal stud walls tested by Barbour et al. (1994) were compared with results obtained by Kosny and Christian (1995) and McGowan and Desjarlais (1997). The Modified Zone Method was found to be the most accurate simple method for estimating the clear wall R-value of light-gage steel stud walls with insulated cavities. However, this analysis does not apply to construction with metal sheathing. Also, *ASHRAE Standard* 90.1 may require a different method of analysis.

Ceilings and Roofs

The overall R-value for ceilings of wood frame flat roofs can be calculated using Equations (1) through (5) from Chapter 22. Properties of the materials are found in Tables 1, 3, 2, and 4. The fraction of framing is assumed to be 0.10 for joists at 16 in. OC and 0.07 for joists at 24 in. OC. The calculation procedure is similar to that shown in Example 1. Note that if the ceiling contains plane air spaces (see Table 3), the resistance depends on the direction of heat flow, i.e., whether the calculation is for a winter (heat flow up) or summer (heat flow down) condition.

For ceilings of pitched roofs under winter conditions, calculate the R-value of the ceiling using the procedure for flat roofs. Table 5 can be used to determine the effective resistance of the

Table 10 Typical Thermal Conductivity for Industrial Insulations at Various Mean Temperatures—Design Values[a]

Material	Max. Temp.,[b] °F	Typical Density, lb/ft³	Typical Conductivity in Btu·in/h·ft²·°F at Mean Temp., °F													
			−100	−75	−50	−25	0	25	50	75	100	200	300	500	700	900
BLANKETS AND FELTS																
ALUMINOSILICATE FIBER																
7 to 10 µm diameter fiber	1800	4								0.24		0.32		0.54	0.99	1.03
	2000	6-8								0.25		0.30		0.48	0.78	0.95
3 µm diameter fiber	2200	4								0.22		0.29		0.45	0.59	0.74
MINERAL FIBER (Rock, slag, or glass)																
Blanket, metal reinforced	1200	6-12									0.26	0.32	0.39	0.54		
	1000	2.5-6									0.24	0.31	0.40	0.61		
Blanket, flexible, fine-fiber organic bonded	350	0.75				0.25	0.26	0.28	0.30	0.33	0.36	0.53				
		0.75				0.24	0.25	0.27	0.29	0.32	0.34	0.48				
		1.0				0.23	0.24	0.25	0.27	0.29	0.32	0.43				
		1.5				0.21	0.22	0.23	0.25	0.27	0.28	0.37				
		2.0				0.20	0.21	0.22	0.23	0.25	0.26	0.33				
		3.0				0.19	0.20	0.21	0.22	0.23	0.24	0.31				
Blanket, flexible, textile fiber, organic bonded	350	0.65				0.27	0.28	0.29	0.30	0.31	0.32	0.50	0.68			
		0.75				0.26	0.27	0.28	0.29	0.31	0.32	0.48	0.66			
		1.0				0.24	0.25	0.26	0.27	0.29	0.31	0.45	0.60			
		1.5				0.22	0.23	0.24	0.25	0.27	0.29	0.39	0.51			
		3.0				0.20	0.21	0.22	0.23	0.24	0.25	0.32	0.41			
Felt, semirigid organic bonded	400	3-8						0.24	0.25	0.26	0.27	0.35	0.44			
Laminated and felted without binder	850	3	0.16	0.17	0.18	0.19	0.20	0.21	0.22	0.23	0.24	0.35	0.55			
	1200	7.5											0.35	0.45	0.60	
BLOCKS, BOARDS, AND PIPE INSULATION																
MAGNESIA	600	11-12									0.35	0.38	0.42			
85% CALCIUM SILICATE	1200	11-15									0.38	0.41	0.44	0.52	0.62	0.72
	1800	12-15												0.63	0.74	0.95
CELLULAR GLASS	900	7.8-8.2	0.24	0.25	0.26	0.28	0.29	0.30	0.32	0.33	0.34	0.41	0.49	0.70	1.01	
DIATOMACEOUS SILICA	1600	21-22												0.64	0.68	0.72
	1900	23-25												0.70	0.75	0.80
MINERAL FIBER (Glass)																
Organic bonded, block and boards	400	3-10	0.16	0.17	0.18	0.19	0.20	0.22	0.24	0.25	0.26	0.33	0.40			
Nonpunking binder	1000	3-10									0.26	0.31	0.38	0.52		
Pipe insulation, slag, or glass	350	3-4					0.20	0.21	0.22	0.23	0.24	0.29				
	500	3-10					0.20	0.22	0.24	0.25	0.26	0.33	0.40			
Inorganic bonded block	1000	10-15									0.33	0.38	0.45	0.55		
	1800	15-24									0.32	0.37	0.42	0.52	0.62	0.74
Pipe insulation, slag, or glass	1000	10-15									0.33	0.38	0.45	0.55		
Resin binder		15	0.23	0.24	0.25	0.26	0.28	0.29								
RIGID POLYSTYRENE																
Extruded (CFC-12 exp.)(smooth skin surface)	165	1.8-3.5	0.16	0.16	0.17	0.16	0.17	0.18	0.19	0.20						
Molded beads	165	1	0.17	0.19	0.20	0.21	0.22	0.24	0.25	0.26	0.28					
		1.25	0.17	0.18	0.19	0.20	0.22	0.23	0.24	0.25	0.27					
		1.5	0.16	0.17	0.19	0.20	0.21	0.22	0.23	0.24	0.26					
		1.75	0.16	0.17	0.18	0.19	0.20	0.22	0.23	0.24	0.25					
		2.0	0.15	0.16	0.18	0.19	0.20	0.21	0.22	0.23	0.24					
RIGID POLYURETHANE/POLYISOCYANURATE[c,d]																
Unfaced (CFC-11 exp.)	210	1.5-2.5	0.16	0.17	0.18	0.18	0.18	0.17	0.16	0.16	0.17					
RIGID POLYISOCYANURATE																
Gas-impermeable facers (CFC-11 exp.)	250	2.0						0.12	0.13	0.14	0.15					
RIGID PHENOLIC																
Closed cell (CFC-11, CFC-113 exp.)		3.0						0.11	0.115	0.12	0.125					
RUBBER, Rigid foamed	150	4.5						0.20	0.21	0.22	0.23					
VEGETABLE AND ANIMAL FIBER																
Wool felt (pipe insulation)	180	20						0.28	0.30	0.31	0.33					
INSULATING CEMENTS																
MINERAL FIBER (Rock, slag, or glass)																
With colloidal clay binder	1800	24-30									0.49	0.55	0.61	0.73	0.85	
With hydraulic setting binder	1200	30-40									0.75	0.80	0.85	0.95		
LOOSE FILL																
Cellulose insulation (milled pulverized paper or wood pulp)		2.5-3							0.26	0.27	0.29					
Mineral fiber, slag, rock, or glass		2-5			0.19	0.21	0.23	0.25	0.26	0.28	0.31					
Perlite (expanded)		3-5	0.22	0.24	0.25	0.27	0.28	0.30	0.31	0.33	0.35					
Silica aerogel		7.6			0.13	0.14	0.15	0.15	0.16	0.17	0.18					
Vermiculite (expanded)		7-8.2			0.39	0.40	0.42	0.44	0.45	0.47	0.49					
		4-6			0.34	0.35	0.38	0.40	0.42	0.44	0.46					

[a]Representative values for dry materials, which are intended as design (not specification) values for materials in normal use. Insulation materials in actual service may have thermal values that vary from design values depending on their in-situ properties (e.g., density and moisture content). For properties of a particular product, use the value supplied by the manufacturer or by unbiased tests.

[b]These temperatures are generally accepted as maximum. When operating temperature approaches these limits, follow the manufacturers' recommendations.

[c]Some polyurethane foams are formed by means that produce a stable product (with respect to k), but most are blown with refrigerant and will change with time.

[d]See Table 4, footnote i.

[e]See Table 4, footnote j.

Thermal and Water Vapor Transmission Data 24.19

Table 11A Heat Loss from Bare Steel Pipe to Still Air at 80°F[a], Btu/h·ft

Nominal Pipe Size[b], in.	Pipe Inside Temperature, °F									
	180	280	380	480	580	680	780	880	980	1080
0.50	59.3	147.2	263.2	412.3	600.9	836.8	1128.6	1485.6	1918.0	2436.8
0.75	72.5	180.1	322.6	506.2	739.2	1031.2	1392.9	1836.0	2373.5	3018.8
1.00	88.8	220.8	396.1	622.7	910.9	1272.6	1721.2	2271.5	2939.4	3741.6
1.25	109.7	272.8	490.4	772.3	1131.7	1583.8	2145.6	2835.4	3673.4	4680.9
1.50	123.9	308.5	555.1	875.1	1283.8	1798.3	2438.2	3224.6	4180.5	5330.0
2.00	151.8	378.1	681.4	1076.3	1581.5	2218.9	3012.6	3989.2	5177.2	6606.8
2.50	180.5	450.0	811.9	1284.0	1888.8	2652.6	3604.3	4775.3	6199.5	7912.5
3.00	215.9	538.8	973.5	1541.8	2271.4	3194.0	4344.9	5762.2	7486.9	9562.3
3.50	243.9	609.0	1101.4	1746.1	2574.7	3623.6	4933.0	6546.4	8510.4	10874.3
4.00	271.6	678.6	1228.2	1948.7	2875.9	4050.5	5517.5	7326.0	9528.1	12178.9
4.50	299.2	747.7	1354.4	2150.9	3176.8	4477.7	6103.8	8109.5	10553.2	13496.2
5.00	329.8	824.7	1494.8	2375.4	3510.6	4950.7	6751.3	8972.5	11678.4	14936.3
6.00	387.1	968.7	1757.8	2796.8	4138.0	5841.4	7972.7	10603.1	13808.2	17667.6
7.00	440.5	1102.8	2003.0	3189.9	4723.9	6673.5	9114.2	12127.4	15799.4	20220.8
8.00	493.3	1235.7	2246.1	3580.0	5305.5	7500.0	10248.4	13642.2	17778.2	22758.0
9.00	545.9	1368.1	2488.8	3970.2	5888.7	8331.0	11392.1	15174.5	19787.1	25343.6
10.00	604.3	1514.8	2757.2	4400.7	6530.1	9241.1	12638.6	16835.1	21949.2	28104.9
11.00	656.0	1644.8	2995.5	4783.8	7102.1	10054.9	13756.2	18328.4	23900.3	30606.1
12.00	704.0	1762.3	3203.8	5104.9	7557.3	10661.8	14524.9	19256.7	24967.6	31766.8
14.00	771.0	1934.2	3525.9	5636.0	8373.9	11862.4	16235.5	21635.6	28212.3	36120.3
16.00	872.2	2189.0	3993.2	6387.4	9495.9	13458.0	18424.8	24556.6	32021.1	40990.7
18.00	972.5	2441.7	4456.7	7132.9	10609.4	15041.3	20596.7	27453.2	35795.6	45813.1
20.00	1072.1	2692.4	4916.8	7873.2	11715.1	16613.4	22752.5	30326.8	39537.6	50590.0
24.00	1269.3	3188.9	5828.3	9339.9	13905.5	19726.9	27019.7	36010.1	46930.3	60014.7

Table 11B Heat Loss from Flat Surfaces to Still Air at 80°F, Btu/h·ft²

	Surface Inside Temperature, °F									
	180	280	380	480	580	680	780	880	980	1080
Vertical surface	212.2	533.1	973.3	1558.6	2321.2	3298.0	4530.1	6062.8	7945.5	10231.5
Horizontal surface										
Facing up	234.7	586.4	1061.1	1683.5	2484.9	3501.9	4775.4	6350.4	8276.3	10606.1
Facing down	183.6	465.3	861.4	1399.6	2112.8	3038.4	4217.8	5696.7	7524.5	9754.7

[a]Calculations from ASTM C 680; steel: $k = 314.4$ Btu·in/h·ft²·°F; $\varepsilon = 0.94$.

[b]Losses per square foot of pipe for pipes larger than 24 in. can be considered the same as losses per square foot for 24-in. pipe.

cylindrical surfaces. Figure 9 shows surface resistance as a function of heat transmission for both flat and cylindrical surfaces. The surface emittance is assumed to be 0.85 to 0.90 in still air at 80°F.

Example 7. Compute the heat loss from a boiler wall if the interior insulation surface temperature is 1100°F and ambient still air temperature is 80°F. The wall is insulated with 4.5 in. of mineral fiber block and 0.5 in. of mineral fiber insulating and finishing cement.

Solution. Assume that the mean temperature of the mineral fiber block is 700°F, the mean temperature of the insulating cement is 200°F, and the surface resistance R_s is 0.60 ft²·°F·h/Btu.

From Table 10, $k_1 = 0.62$ and $k_2 = 0.80$. Using Equation (9) from Chapter 22:

$$q_s = \frac{1100 - 80}{(4.5/0.62) + (0.5/0.80) + 0.60} = 120.2 \text{ Btu/h} \cdot \text{ft}^2$$

As a check, from Figure 9, at 120.2 Btu/h·ft², $R_s = 0.56$. The mean temperature of the mineral fiber block is:

$$4.5/0.62 = 7.26;\ 7.26/2 = 3.63$$

$$1100 - \frac{3.63}{8.48}(1020) = 663°\text{F}$$

and the mean temperature of the insulating cement is:

$$0.5/0.80 = 0.63;\ 0.63/2 = 0.31;\ 7.26 + 0.31 = 7.57$$

$$1100 - \frac{7.57}{8.48}(1020) = 189°\text{F}$$

From Table 10, at 663°F, $k_1 = 0.60$; at 189°F, $k_2 = 0.79$.

Using these adjusted values to recalculate q_s:

$$q_s = \frac{1020}{(4.5/0.60) + (0.5/0.79) + 0.56} = \frac{1020}{8.69}$$

$$= 117.4 \text{ Btu/h} \cdot \text{ft}^2$$

From Figure 9, at 117.4 Btu/h·ft², $R_s = 0.56$. The mean temperature of the mineral fiber block is:

$$4.5/0.6 = 7.50;\ 7.50/2 = 3.75$$

$$1100 - \frac{3.75}{8.69}(1020) = 660°\text{F}$$

and the mean temperature of the insulating cement is:

$$0.5/0.79 = 0.63;\ 0.63/2 = 0.31;\ 7.50 + 0.31 = 7.81$$

$$1100 - \frac{7.81}{8.69}(1020) = 183°\text{F}$$

From Table 10, at 660°F, $k_1 = 0.60$; at 183°F, $k_2 = 0.79$.

Since R_s, k_1, and k_2 do not change at these values, $q_s = 117.4$ Btu/h·ft.

Example 8. Compute heat loss per square foot of outer surface of insulation if pipe temperature is 1200°F and ambient still air temperature is 80°F. The pipe is nominal 6-in. steel pipe, insulated with a nominal 3-in. thick diatomaceous silica as the inner layer and a nominal 2-in. thick calcium silicate as the outer layer.

Table 12 Heat Loss from Bare Copper Tube to Still Air at 80°F[a], Btu/h·ft

Nominal Tube Size, in.	Tube Inside Temperature, °F								
	120	150	180	210	240	270	300	330	
0.250	7.1	14.1	21.9	30.6	39.9	49.9	60.6	71.9	
0.375	9.1	18.0	28.1	39.1	51.1	63.9	77.6	92.2	
0.500	11.0	21.8	34.0	47.4	61.9	77.5	94.1	111.8	
0.750	14.7	29.1	45.4	63.3	82.7	103.6	126.0	149.8	
1.000	18.3	36.2	56.4	78.7	102.8	128.9	156.7	186.5	
1.250	21.8	43.1	67.2	93.6	122.4	153.4	186.7	222.2	
1.500	25.2	49.8	77.6	108.3	141.5	177.4	216.0	257.1	
2.000	31.8	62.9	98.0	136.7	178.8	224.3	273.1	325.4	
2.500	38.3	75.6	117.9	164.4	215.1	269.8	328.7	391.8	Dull ε = 0.44
3.000	44.6	88.1	137.2	191.5	250.5	314.4	383.2	456.9	
3.500	50.8	100.3	156.3	218.0	285.4	358.2	436.7	520.8	
4.000	57.0	112.3	175.0	244.2	319.7	401.4	489.4	583.9	
5.000	69.0	135.9	211.7	295.5	386.9	486.0	592.8	707.6	
6.000	80.7	159.0	247.7	345.7	452.8	568.9	694.2	829.0	
8.000	103.7	204.1	317.8	443.7	581.3	730.7	892.1	1066.0	
10.000	126.1	247.9	386.1	539.1	706.5	888.4	1085.2	1297.4	
12.000	148.0	290.9	453.0	632.5	829.2	1043.1	1274.6	1524.4	
0.250	5.4	10.8	16.9	23.5	30.5	37.9	45.5	53.5	
0.375	6.8	13.7	21.4	29.7	38.6	47.9	57.6	67.6	
0.500	8.2	16.4	25.7	35.7	46.3	57.4	69.1	81.2	
0.750	10.7	21.6	33.8	46.9	60.9	75.6	90.9	106.8	
1.000	13.2	26.5	41.4	57.6	74.7	92.8	111.6	131.2	
1.250	15.5	31.3	48.8	67.8	88.0	109.3	131.6	154.7	
1.500	17.8	35.8	56.0	77.8	100.9	125.3	150.8	177.4	
2.000	22.2	44.6	69.7	96.8	125.7	156.1	187.9	221.1	
2.500	26.4	53.0	82.8	115.1	149.5	185.6	223.5	263.0	Bright ε = 0.08
3.000	30.5	61.2	95.6	132.8	172.4	214.2	257.9	303.5	
3.500	34.4	69.1	107.9	150.0	194.8	242.0	291.4	342.9	
4.000	38.3	76.8	120.0	166.8	216.6	269.1	324.1	381.4	
5.000	45.7	91.8	143.4	199.3	258.8	321.6	387.4	456.1	
6.000	53.0	106.3	166.0	230.7	299.7	372.5	448.7	528.3	
8.000	66.8	134.1	209.4	291.1	378.2	470.1	566.5	667.2	
10.000	80.2	160.8	251.0	349.0	453.4	563.7	679.5	800.4	
12.000	93.0	186.5	291.3	404.9	526.1	654.2	788.7	929.3	

[a]Calculations from ASTM C 680; for copper: k = 2784 Btu·in/h·ft²·°F.

Solution. From Chapter 40 of the 1996 *ASHRAE Handbook—Equipment*, r_o = 3.31 in. A nominal 3-in. thick diatomaceous silica insulation to fit a nominal 6-in. steel pipe is 3.02 in. thick. A nominal 2-in. thick calcium silicate insulation to fit over the 3.02-in. diatomaceous silica is 2.08 in. thick. Therefore, r_i = 6.33 in. and r_s = 8.41 in..

Assume that the mean temperature of the diatomaceous silica is 600°F, the mean temperature of the calcium silicate is 250°F and the surface resistance R_s is 0.50. From Table 10, k_1 = 0.66; k_2 = 0.42. By Equation (10) from Chapter 22:

$$q_s = \frac{1200 - 80}{[8.41\ln(6.33/3.31)/0.66] + [8.41\ln(8.41/3.31)/0.40] + 0.50}$$

$$= \frac{1120}{(5.45/0.66) + (2.39/0.40) + 0.50} = 76.0 \text{ Btu/h} \cdot \text{ft}^2$$

From Figure 9, at 76.0 Btu/h·ft², R_s = 0.60. The mean temperature of the diatomaceous silica is:

$$5.45/0.66 = 8.26;\ 8.26/2 = 4.13$$

$$1200 - \frac{4.13}{14.83}(1120) = 888°\text{F}$$

and the mean temperature of the calcium silicate is:

$$2.39/0.40 = 5.98;\ 5.98/2 = 2.99;\ 8.26 + 2.99 = 11.25$$

$$1200 - \frac{11.25}{14.83}(1120) = 350°\text{F}$$

From Table 10, k_1 = 0.72; k_2 = 0.46. Recalculating:

$$q_s = \frac{1120}{(5.45/0.72) + (2.39/0.46) + 0.60} = 83.8 \text{ Btu/h} \cdot \text{ft}^2$$

From Figure 9 at 83.8 Btu/h·ft², R_s = 0.59. The mean temperature of the diatomaceous silica is:

$$5.45/0.72 = 7.57;\ 7.57/2 = 3.78$$

$$1200 - \frac{3.78}{13.36}(1120) = 883°\text{F}$$

and the mean temperature of the calcium silicate is:

$$2.39/0.40 = 5.98;\ 5.98/2 = 2.99;\ 8.26 + 2.99 = 11.25$$

$$1200 - \frac{11.25}{14.83}(1120) = 350°\text{F}$$

From Table 10, k_1 = 0.72; k_2 = 0.46. Recalculating:

$$2.39/0.46 = 5.20;\ 5.20/2 = 2.60;\ 7.57 + 2.60 = 10.17$$

$$1200 - \frac{10.17}{13.36}(1120) = 347°\text{F}$$

Since R_s, k_1, and k_2 do not change at 83.8 Btu/h·ft², this is q_s. The heat flow per ft² of the inner surface of the insulation is:

$$q_o = q_s(r_s/r_o) = 83.8(8.41/3.31) = 213 \text{ Btu/h} \cdot \text{ft}^2$$

~~Table B-2: Framed Wall Assembly U-values~~

~~Framing Type and Spacing~~	~~Framing Cavity R-Value~~	~~Insulated Sheathing R-Value~~	~~Wood Wall U-Value~~	~~Metal Wall U-Value~~
~~2x4 @ 16" O.C.~~	~~11 (compressed)~~	~~0~~	~~0.098~~	~~0.202~~
		~~4~~	~~0.068~~	~~0.112~~
		~~5~~	~~0.064~~	~~0.101~~
		~~7~~	~~0.056~~	~~0.084~~
		~~8.7~~	~~0.051~~	~~0.073~~
	~~13~~	~~0~~	~~0.088~~	~~0.195~~
		~~4~~	~~0.063~~	~~0.109~~
		~~5~~	~~0.059~~	~~0.099~~
		~~7~~	~~0.052~~	~~0.082~~
		~~8.7~~	~~0.048~~	~~0.072~~
	~~15~~	~~0~~	~~0.081~~	~~0.189~~
		~~4~~	~~0.059~~	~~0.108~~
		~~5~~	~~0.055~~	~~0.097~~
		~~7~~	~~0.049~~	~~0.077~~
		~~8.7~~	~~0.045~~	~~0.071~~
~~2x4 @ 24" O.C.~~	~~11~~	~~0~~	~~0.094~~	~~0.173~~
		~~4~~	~~0.066~~	~~0.102~~
		~~5~~	~~0.062~~	~~0.093~~
		~~7~~	~~0.055~~	~~0.078~~
		~~8.7~~	~~0.050~~	~~0.069~~
	~~13~~	~~0~~	~~0.085~~	~~0.165~~
		~~4~~	~~0.061~~	~~0.099~~
		~~5~~	~~0.057~~	~~0.090~~
		~~7~~	~~0.051~~	~~0.077~~
		~~8.7~~	~~0.047~~	~~0.068~~
	~~15~~	~~0~~	~~0.077~~	~~0.158~~
		~~4~~	~~0.056~~	~~0.097~~
		~~5~~	~~0.053~~	~~0.088~~
		~~7~~	~~0.047~~	~~0.071~~
		~~8.7~~	~~0.044~~	~~0.067~~

~~Framing Type and Spacing~~	~~Framing Cavity R-Value~~	~~Insulated Sheathing R-Value~~	~~Wood Wall U-Value~~	~~Metal Wall U-Value~~
~~2x6 @ 16" O.C.~~	~~19 (compressed)~~	~~0~~	~~0.065~~	~~0.120~~
		~~4~~	~~0.058~~	~~0.098~~
		~~5~~	~~0.048~~	~~0.089~~
		~~7~~	~~0.043~~	~~0.075~~
		~~8.7~~	~~0.040~~	~~0.067~~
	~~21~~	~~0~~	~~0.059~~	~~0.157~~
		~~4~~	~~0.046~~	~~0.096~~
		~~5~~	~~0.044~~	~~0.088~~
		~~7~~	~~0.041~~	~~0.075~~
		~~8.7~~	~~0.037~~	~~0.066~~
	~~22 (compressed)~~	~~0~~	~~0.062~~	~~0.158~~
		~~4~~	~~0.048~~	~~0.097~~
		~~5~~	~~0.045~~	~~0.088~~
		~~7~~	~~0.041~~	~~0.075~~
		~~8.7~~	~~0.038~~	~~0.067~~
~~2x6 @ 24" O.C.~~	~~19 (compressed)~~	~~0~~	~~0.062~~	~~0.135~~
		~~4~~	~~0.048~~	~~0.088~~
		~~5~~	~~0.045~~	~~0.081~~
		~~7~~	~~0.042~~	~~0.070~~
		~~8.7~~	~~0.039~~	~~0.062~~
	~~21~~	~~0~~	~~0.056~~	~~0.130~~
		~~4~~	~~0.044~~	~~0.086~~
		~~5~~	~~0.042~~	~~0.079~~
		~~7~~	~~0.039~~	~~0.068~~
		~~8.7~~	~~0.036~~	~~0.061~~
	~~22 (compressed)~~	~~0~~	~~0.058~~	~~0.132~~
		~~4~~	~~0.046~~	~~0.086~~
		~~5~~	~~0.043~~	~~0.079~~
		~~7~~	~~0.040~~	~~0.068~~
		~~8.7~~	~~0.037~~	~~0.061~~

~~Table B-2 (cont'd): Framed Wall Assembly U-values~~

~~Framing Type and Spacing~~	~~Framing Cavity R-Value~~	~~Insulated Sheathing R-Value~~	~~Wood Wall U-Value~~	~~Metal Wall U-Value~~
~~2x8 @ 16" O.C.~~	~~19~~	~~0~~	~~0.059~~	~~0.145~~
		~~4~~	~~0.047~~	~~0.092~~
		~~5~~	~~0.044~~	~~0.084~~
		~~7~~	~~0.041~~	~~0.072~~
		~~8.7~~	~~0.038~~	~~0.064~~
	~~22~~	~~0~~	~~0.054~~	~~0.140~~
		~~4~~	~~0.043~~	~~0.090~~
		~~5~~	~~0.041~~	~~0.082~~
		~~7~~	~~0.038~~	~~0.071~~
		~~8.7~~	~~0.035~~	~~0.063~~
	~~25~~	~~0~~	~~0.050~~	~~0.136~~
		~~4~~	~~0.040~~	~~0.088~~
		~~5~~	~~0.038~~	~~0.081~~
		~~7~~	~~0.035~~	~~0.070~~
		~~8.7~~	~~0.033~~	~~0.062~~
	~~30 (compressed)~~	~~0~~	~~0.048~~	~~0.135~~
		~~4~~	~~0.039~~	~~0.088~~
		~~5~~	~~0.037~~	~~0.081~~
		~~7~~	~~0.035~~	~~0.070~~
		~~8.7~~	~~0.032~~	~~0.062~~
~~2x8 @ 24" O.C.~~	~~19~~	~~0~~	~~0.056~~	~~0.122~~
		~~4~~	~~0.045~~	~~0.082~~
		~~5~~	~~0.043~~	~~0.076~~
		~~7~~	~~0.040~~	~~0.066~~
		~~8.7~~	~~0.037~~	~~0.059~~
	~~22~~	~~0~~	~~0.051~~	~~0.117~~
		~~4~~	~~0.041~~	~~0.080~~
		~~5~~	~~0.040~~	~~0.074~~
		~~7~~	~~0.036~~	~~0.064~~
		~~8.7~~	~~0.034~~	~~0.058~~
	~~25~~	~~0~~	~~0.047~~	~~0.113~~
		~~4~~	~~0.038~~	~~0.078~~
		~~5~~	~~0.037~~	~~0.072~~
		~~7~~	~~0.034~~	~~0.063~~
		~~8.7~~	~~0.032~~	~~0.057~~
	~~30 (compressed)~~	~~0~~	~~0.046~~	~~0.112~~
		~~4~~	~~0.037~~	~~0.077~~
		~~5~~	~~0.036~~	~~0.072~~
		~~7~~	~~0.034~~	~~0.063~~
		~~8.7~~	~~0.031~~	~~0.057~~

~~Framing Type and Spacing~~	~~Framing Cavity R-Value~~	~~Insulated Sheathing R-Value~~	~~Wood Wall U-Value~~	~~Metal Wall U-Value~~
~~2x10 @ 16" O.C.~~	~~30~~	~~0~~	~~0.041~~	~~0.120~~
		~~4~~	~~0.035~~	~~0.081~~
		~~5~~	~~0.033~~	~~0.075~~
		~~7~~	~~0.031~~	~~0.065~~
		~~8.7~~	~~0.029~~	~~0.059~~
	~~38 (compressed)~~	~~0~~	~~0.040~~	~~0.119~~
		~~4~~	~~0.033~~	~~0.080~~
		~~5~~	~~0.032~~	~~0.074~~
		~~7~~	~~0.030~~	~~0.065~~
		~~8.7~~	~~0.028~~	~~0.058~~
~~2x10 @ 24" O.C.~~	~~30 (compressed)~~	~~0~~	~~0.039~~	~~0.099~~
		~~4~~	~~0.033~~	~~0.071~~
		~~5~~	~~0.032~~	~~0.066~~
		~~7~~	~~0.030~~	~~0.058~~
		~~8.7~~	~~0.028~~	~~0.053~~
	~~38~~	~~0~~	~~0.038~~	~~0.097~~
		~~4~~	~~0.032~~	~~0.070~~
		~~5~~	~~0.031~~	~~0.066~~
		~~7~~	~~0.029~~	~~0.058~~
		~~8.7~~	~~0.027~~	~~0.053~~

~~Table B-2a: Solar Heat Gain Coefficients Used for Exterior Shading[1]~~

~~Exterior Shading Device~~	~~SHGC~~
~~Standard Bug Screens~~	~~0.76~~
~~Exterior Sunscreens with weave 53*16/inch~~	~~0.30~~
~~Louvered Sunscreens with louvers as wide as openings~~	~~0.27~~
~~Low Sun Angle (LSA) Louvered Sunscreens~~	~~0.13~~
~~Roll-down Awning~~	~~0.13~~
~~Roll Down Blinds or Slats~~	~~0.13~~
~~None (for skylights only)~~	~~1.00~~

~~1) Exterior operable awnings (canvas, plastic or metal), except those that roll vertically down and cover the entire window, should be treated as overhangs for purposes of compliance with the Standards.~~

~~Table B-3: Metal Framing Factor~~

~~METAL FRAMING FACTORS~~			
~~Stud Spacing~~	~~Stud Depth~~	~~Insulation R-Value~~	~~Framing Factor~~
~~16" o.c.~~	~~4"~~	~~R-7~~	~~0.522~~
		~~R-11~~	~~0.403~~
		~~R-13~~	~~0.362~~
		~~R-15~~	~~0.328~~
	~~6"~~	~~R-19~~	~~0.325~~
		~~R-21~~	~~0.300~~
		~~R-22~~	~~0.287~~
		~~R-25~~	~~0.263~~
~~24" o.c.~~	~~4"~~	~~R-7~~	~~0.577~~
		~~R-11~~	~~0.458~~
		~~R-13~~	~~0.415~~
		~~R-15~~	~~0.379~~
	~~6"~~	~~R-19~~	~~0.375~~
		~~R-21~~	~~0.348~~
		~~R-22~~	~~0.335~~
		~~R-25~~	~~0.308~~
~~R-value calculation for Exterior Wall Assemblies with Metal Studs, July, 19, 1990, Staff Draft Docket 90-CON-1.~~			
~~*Correction to metal framing factors applies to the entire assembly including: interior air films, interior surfaces, cavity/insulation, exterior surfaces, and exterior air films.~~			

~~Table B-4: Properties of Hollow Unit Masonry Walls~~

~~Type~~			~~Core Treatment~~		
			~~Solid~~	~~Partly Grouted with Ungrouted Cells~~	
			~~Grout~~	~~Empty~~	~~Insulated~~
~~12"~~	~~LW CMU~~	~~U~~	~~0.51~~	~~0.43~~	~~0.30~~
		~~Rw~~	~~2.0~~	~~2.3~~	~~3.3~~
		~~HC~~	~~23~~	~~14.8~~	~~14.8~~
	~~MW CMU~~	~~U~~	~~0.54~~	~~0.46~~	~~0.33~~
		~~Rw~~	~~1.9~~	~~2.2~~	~~3.0~~
		~~HC~~	~~23.9~~	~~15.6~~	~~15.6~~
	~~NW CMU~~	~~U~~	~~0.57~~	~~0.49~~	~~0.36~~
		~~Rw~~	~~1.8~~	~~2.0~~	~~2.8~~
		~~HC~~	~~24.8~~	~~16.5~~	~~16.5~~
~~10"~~	~~LW CMU~~	~~U~~	~~0.55~~	~~0.46~~	~~0.34~~
		~~Rw~~	~~1.8~~	~~2.2~~	~~2.9~~
		~~HC~~	~~18.9~~	~~12.6~~	~~12.6~~
	~~MW CMU~~	~~U~~	~~0.59~~	~~0.49~~	~~0.37~~
		~~Rw~~	~~1.7~~	~~2.1~~	~~2.7~~
		~~HC~~	~~19.7~~	~~13.4~~	~~13.4~~
	~~NW CMU~~	~~U~~	~~0.62~~	~~0.52~~	~~0.41~~
		~~Rw~~	~~1.6~~	~~1.9~~	~~2.4~~
		~~HC~~	~~20.5~~	~~14.2~~	~~14.2~~
~~8"~~	~~LW CMU~~	~~U~~	~~0.62~~	~~0.50~~	~~0.37~~
		~~Rw~~	~~1.6~~	~~2.0~~	~~2.7~~
		~~HC~~	~~15.1~~	~~9.9~~	~~9.9~~
	~~MW CMU~~	~~U~~	~~0.65~~	~~0.53~~	~~0.41~~
		~~Rw~~	~~1.5~~	~~1.9~~	~~2.4~~
		~~HC~~	~~15.7~~	~~10.5~~	~~10.5~~
	~~NW CMU~~	~~U~~	~~0.69~~	~~0.56~~	~~0.44~~
		~~Rw~~	~~1.4~~	~~1.8~~	~~2.3~~
		~~HC~~	~~16.3~~	~~11.1~~	~~11.1~~
	~~Clay Unit~~	~~U~~	~~0.57~~	~~0.47~~	~~0.39~~
		~~Rw~~	~~1.8~~	~~2.1~~	~~2.6~~
		~~HC~~	~~15.1~~	~~11.4~~	~~11.4~~
~~6"~~	~~LW CMU~~	~~U~~	~~0.68~~	~~0.54~~	~~0.44~~
		~~Rw~~	~~1.5~~	~~1.9~~	~~2.3~~

		~~HC~~	~~10.9~~	~~7.9~~	~~7.9~~
	~~MW CMU~~	~~U~~	~~0.72~~	~~0.58~~	~~0.48~~
		~~Rw~~	~~1.4~~	~~1.7~~	~~2.1~~
		~~HC~~	~~11.4~~	~~8.4~~	~~8.4~~
	~~NW CMU~~	~~U~~	~~0.76~~	~~0.61~~	~~0.52~~
		~~Rw~~	~~1.3~~	~~1.6~~	~~1.9~~
		~~HC~~	~~11.9~~	~~8.9~~	~~8.9~~
	~~Clay Unit~~	~~U~~	~~0.65~~	~~0.52~~	~~0.45~~
		~~Rw~~	~~1.5~~	~~1.9~~	~~2.2~~
		~~HC~~	~~11.1~~	~~8.6~~	~~8.6~~

~~Notes:~~

~~LW CMU is a Light Weight Concrete Masonry Unit per ASTM C 90, Calculated at 105 PCF density~~

~~MW CMU is a Medium Weight Concrete Masonry Unit per ASTM C 90, Calculated at 115 PCF density~~

~~NW CMU is a Normal Weight Concrete Masonry Unit per ASTM C 90, Calculated at 125 PCF density~~

~~Clay Unit is a Hollow Clay Unit per ASTM C 652, Calculated at 130 PCF density~~

~~Values include air films on inner and outer surfaces.~~

~~Calculations based on Energy Calculations and Data, CMACN, 1986~~

~~Grouted Cells at 32" X 48" in Partly Grouted Walls~~

~~Source: Berkeley Solar Group; Concrete Masonry Association of California and Nevada~~

~~Table B-5: Properties of Solid Unit Masonry and Solid Concrete Walls~~

~~Type~~		~~Layer Thickness, inches~~									
		~~3~~	~~4~~	~~5~~	~~6~~	~~7~~	~~8~~	~~9~~	~~10~~	~~11~~	~~12~~
~~LW CMU~~	~~U~~	~~na~~	~~0.71~~	~~0.64~~	~~na~~	~~na~~	~~na~~	~~na~~	~~na~~	~~na~~	~~na~~
	~~Rw~~	~~na~~	~~1.4~~	~~1.6~~	~~na~~	~~na~~	~~na~~	~~na~~	~~na~~	~~na~~	~~na~~
	~~HC~~	~~na~~	~~7.00~~	~~8.75~~	~~na~~	~~na~~	~~na~~	~~na~~	~~na~~	~~na~~	~~na~~
~~MW CMU~~	~~U~~	~~na~~	~~0.76~~	~~0.70~~	~~na~~	~~na~~	~~na~~	~~na~~	~~na~~	~~na~~	~~na~~
	~~Rw~~	~~na~~	~~1.3~~	~~1.4~~	~~na~~	~~na~~	~~na~~	~~na~~	~~na~~	~~na~~	~~na~~
	~~HC~~	~~na~~	~~7.67~~	~~9.58~~	~~na~~	~~na~~	~~na~~	~~na~~	~~na~~	~~na~~	~~na~~
~~NW CMU~~	~~U~~	~~0.89~~	~~0.82~~	~~0.76~~	~~na~~	~~na~~	~~na~~	~~na~~	~~na~~	~~na~~	~~na~~
	~~Rw~~	~~1.1~~	~~1.2~~	~~1.3~~	~~na~~	~~na~~	~~na~~	~~na~~	~~na~~	~~na~~	~~na~~
	~~HC~~	~~6.25~~	~~8.33~~	~~10.42~~	~~na~~	~~na~~	~~na~~	~~na~~	~~na~~	~~na~~	~~na~~
~~Clay Brick~~	~~U~~	~~0.80~~	~~0.72~~	~~0.66~~	~~na~~	~~na~~	~~na~~	~~na~~	~~na~~	~~na~~	~~na~~
	~~Rw~~	~~1.3~~	~~1.4~~	~~1.5~~	~~na~~	~~na~~	~~na~~	~~na~~	~~na~~	~~na~~	~~na~~
	~~HC~~	~~6.30~~	~~8.40~~	~~10.43~~	~~na~~	~~na~~	~~na~~	~~na~~	~~na~~	~~na~~	~~na~~
~~Concrete~~	~~U~~	~~0.96~~	~~0.91~~	~~0.86~~	~~0.82~~	~~0.78~~	~~0.74~~	~~0.71~~	~~0.68~~	~~0.65~~	~~0.63~~
	~~Rw~~	~~1.0~~	~~1.1~~	~~1.2~~	~~1.2~~	~~1.3~~	~~1.4~~	~~1.4~~	~~1.5~~	~~1.5~~	~~1.6~~

~~HC~~	~~7.20~~	~~9.60~~	~~12.00~~	~~14.40~~	~~16.80~~	~~19.20~~	~~21.60~~	~~24.00~~	~~26.40~~	~~28.80~~

~~Notes:~~

~~LW CMU is a Light Weight Concrete Masonry Unit per ASTM C 90 or 55, Calculated at 105 PCF density~~

~~MW CMU is a Medium Weight Concrete Masonry Unit per ASTM C 90 or 55, Calculated at 115 PCF density~~

~~NW CMU is a Normal Weight Concrete Masonry Unit per ASTM C 90 or 55, Calculated at 125 PCF density~~

~~Clay Brick is a Clay Unit per ASTM C 62, Calculated at 130 PCF density~~

~~Concrete is structural poured or precast concrete, Calculated at 144 PCF density~~

~~Calculations based on Energy Calculations and Data, CMACN, 1986~~

~~Values include air films on inner and outer surfaces.~~

~~Source: Berkeley Solar Group; Concrete Masonry Association of California and Nevada~~

~~Table B-6: Effective R-values for Interior Insulation Layers on Structural Mass Walls~~

~~Type Actual Thick~~	~~Frame~~	~~FURRING SPACE R-VALUE WITHOUT FRAMING EFFECTS~~																					
		~~0~~	~~1~~	~~2~~	~~3~~	~~4~~	~~5~~	~~6~~	~~7~~	~~8~~	~~9~~	~~10~~	~~11~~	~~12~~	~~13~~	~~14~~	~~15~~	~~16~~	~~17~~	~~18~~	~~19~~	~~20~~	~~21~~
~~Any~~	~~None~~	~~0.5~~	~~1.5~~	~~2.5~~	~~3.5~~	~~4.5~~	~~5.5~~	~~6.5~~	~~7.5~~	~~8.5~~	~~9.5~~	~~10~~	~~11.5~~	~~12.5~~	~~13.5~~	~~14.5~~	~~15.5~~	~~16.5~~	~~17.5~~	~~18.5~~	~~19.5~~	~~20.5~~	~~21.5~~
~~0.5"~~	~~Wood~~	~~1.3~~	~~1.3~~	~~1.9~~	~~2.4~~	~~2.7~~	~~na~~	~~na~~	~~na~~	~~na~~	~~na~~	~~na~~	~~na~~	~~na~~	~~na~~	~~na~~	~~na~~	~~na~~	~~na~~	~~na~~	~~na~~	~~na~~	~~na~~
	~~Metal~~	~~0.9~~	~~0.9~~	~~1.1~~	~~1.1~~	~~1.2~~	~~na~~	~~na~~	~~na~~	~~na~~	~~na~~	~~na~~	~~na~~	~~na~~	~~na~~	~~na~~	~~na~~	~~na~~	~~na~~	~~na~~	~~na~~	~~na~~	~~na~~
~~0.75"~~	~~Wood~~	~~1.4~~	~~1.4~~	~~2.1~~	~~2.7~~	~~3.1~~	~~3.5~~	~~3.8~~	~~na~~	~~na~~	~~na~~	~~na~~	~~na~~	~~na~~	~~na~~	~~na~~	~~na~~	~~na~~	~~na~~	~~na~~	~~na~~	~~na~~	~~na~~
	~~Metal~~	~~1.0~~	~~1.0~~	~~1.3~~	~~1.4~~	~~1.5~~	~~1.5~~	~~1.6~~	~~na~~	~~na~~	~~na~~	~~na~~	~~na~~	~~na~~	~~na~~	~~na~~	~~na~~	~~na~~	~~na~~	~~na~~	~~na~~	~~na~~	~~na~~
~~1.0"~~	~~Wood~~	~~1.3~~	~~1.5~~	~~2.2~~	~~2.9~~	~~3.4~~	~~3.9~~	~~4.3~~	~~4.6~~	~~4.9~~	~~na~~	~~na~~	~~na~~	~~na~~	~~na~~	~~na~~	~~na~~	~~na~~	~~na~~	~~na~~	~~na~~	~~na~~	~~na~~
	~~Metal~~	~~1.0~~	~~1.1~~	~~1.4~~	~~1.6~~	~~1.7~~	~~1.8~~	~~1.8~~	~~1.9~~	~~1.9~~	~~na~~	~~na~~	~~na~~	~~na~~	~~na~~	~~na~~	~~na~~	~~na~~	~~na~~	~~na~~	~~na~~	~~na~~	~~na~~
~~1.5"~~	~~Wood~~	~~1.3~~	~~1.5~~	~~2.4~~	~~3.1~~	~~3.8~~	~~4.4~~	~~4.9~~	~~5.4~~	~~5.8~~	~~6.2~~	~~6.5~~	~~6.8~~	~~7.1~~	~~na~~	~~na~~	~~na~~	~~na~~	~~na~~	~~na~~	~~na~~	~~na~~	~~na~~
	~~Metal~~	~~1.1~~	~~1.2~~	~~1.6~~	~~1.9~~	~~2.1~~	~~2.2~~	~~2.3~~	~~2.4~~	~~2.5~~	~~2.5~~	~~2.6~~	~~2.6~~	~~2.7~~	~~na~~	~~na~~	~~na~~	~~na~~	~~na~~	~~na~~	~~na~~	~~na~~	~~na~~
~~2"~~	~~Wood~~	~~1.4~~	~~1.5~~	~~2.5~~	~~3.3~~	~~4.0~~	~~4.7~~	~~5.3~~	~~5.9~~	~~6.4~~	~~6.9~~	~~7.3~~	~~7.7~~	~~8.1~~	~~8.4~~	~~8.7~~	~~9.0~~	~~9.3~~	~~na~~	~~na~~	~~na~~	~~na~~	~~na~~
	~~Metal~~	~~1.1~~	~~1.2~~	~~1.7~~	~~2.1~~	~~2.3~~	~~2.5~~	~~2.7~~	~~2.8~~	~~2.9~~	~~3.0~~	~~3.1~~	~~3.2~~	~~3.2~~	~~3.3~~	~~3.3~~	~~3.4~~	~~3.4~~	~~na~~	~~na~~	~~na~~	~~na~~	~~na~~
~~2.5"~~	~~Wood~~	~~1.4~~	~~1.5~~	~~2.5~~	~~3.4~~	~~4.2~~	~~4.9~~	~~5.6~~	~~6.3~~	~~6.8~~	~~7.4~~	~~7.9~~	~~8.4~~	~~8.8~~	~~9.2~~	~~9.6~~	~~10.0~~	~~10.3~~	~~10.6~~	~~10.9~~	~~11.2~~	~~11.5~~	~~na~~
	~~Metal~~	~~1.2~~	~~1.3~~	~~1.8~~	~~2.3~~	~~2.6~~	~~2.8~~	~~3.0~~	~~3.2~~	~~3.3~~	~~3.5~~	~~3.6~~	~~3.6~~	~~3.7~~	~~3.8~~	~~3.9~~	~~3.9~~	~~4.0~~	~~4.0~~	~~4.1~~	~~4.1~~	~~4.1~~	~~na~~
~~3"~~	~~Wood~~	~~1.4~~	~~1.5~~	~~2.5~~	~~3.5~~	~~4.3~~	~~5.1~~	~~5.8~~	~~6.5~~	~~7.2~~	~~7.8~~	~~8.3~~	~~8.9~~	~~9.4~~	~~9.9~~	~~10.3~~	~~10.7~~	~~11.1~~	~~11.5~~	~~11.9~~	~~12.2~~	~~12.5~~	~~12.9~~
	~~Metal~~	~~1.2~~	~~1.3~~	~~1.9~~	~~2.4~~	~~2.8~~	~~3.1~~	~~3.3~~	~~3.5~~	~~3.7~~	~~3.8~~	~~4.0~~	~~4.1~~	~~4.2~~	~~4.3~~	~~4.4~~	~~4.4~~	~~4.5~~	~~4.6~~	~~4.6~~	~~4.7~~	~~4.7~~	~~4.8~~
~~3.5"~~	~~Wood~~	~~1.4~~	~~1.5~~	~~2.6~~	~~3.5~~	~~4.4~~	~~5.2~~	~~6.0~~	~~6.7~~	~~7.4~~	~~8.1~~	~~8.7~~	~~9.3~~	~~9.8~~	~~10.4~~	~~10.9~~	~~11.3~~	~~11.8~~	~~12.2~~	~~12.6~~	~~13.0~~	~~13.4~~	~~13.8~~
	~~Metal~~	~~1.2~~	~~1.3~~	~~2.0~~	~~2.5~~	~~2.9~~	~~3.2~~	~~3.5~~	~~3.8~~	~~4.0~~	~~4.2~~	~~4.3~~	~~4.5~~	~~4.6~~	~~4.7~~	~~4.8~~	~~4.9~~	~~5.0~~	~~5.1~~	~~5.1~~	~~5.2~~	~~5.2~~	~~5.3~~
~~4"~~	~~Wood~~	~~1.4~~	~~1.6~~	~~2.6~~	~~3.6~~	~~4.5~~	~~5.3~~	~~6.1~~	~~6.9~~	~~7.6~~	~~8.3~~	~~9.0~~	~~9.6~~	~~10.2~~	~~10.8~~	~~11.3~~	~~11.9~~	~~12.4~~	~~12.8~~	~~13.3~~	~~13.7~~	~~14.2~~	~~14.6~~
	~~Metal~~	~~1.2~~	~~1.3~~	~~2.0~~	~~2.6~~	~~3.0~~	~~3.4~~	~~3.7~~	~~4.0~~	~~4.2~~	~~4.5~~	~~4.6~~	~~4.8~~	~~5.0~~	~~5.1~~	~~5.2~~	~~5.3~~	~~5.4~~	~~5.5~~	~~5.6~~	~~5.7~~	~~5.8~~	~~5.8~~
~~4.5"~~	~~Wood~~	~~1.4~~	~~1.6~~	~~2.6~~	~~3.6~~	~~4.5~~	~~5.4~~	~~6.2~~	~~7.1~~	~~7.8~~	~~8.5~~	~~9.2~~	~~9.9~~	~~10.5~~	~~11.2~~	~~11.7~~	~~12.3~~	~~12.8~~	~~13.3~~	~~13.8~~	~~14.3~~	~~14.8~~	~~15.2~~
	~~Metal~~	~~1.2~~	~~1.3~~	~~2.1~~	~~2.6~~	~~3.1~~	~~3.5~~	~~3.9~~	~~4.2~~	~~4.5~~	~~4.7~~	~~4.9~~	~~5.1~~	~~5.3~~	~~5.4~~	~~5.6~~	~~5.7~~	~~5.8~~	~~5.9~~	~~6.0~~	~~6.1~~	~~6.2~~	~~6.3~~
~~5"~~	~~Wood~~	~~1.4~~	~~1.6~~	~~2.6~~	~~3.6~~	~~4.6~~	~~5.5~~	~~6.3~~	~~7.2~~	~~8~~	~~8.7~~	~~9.4~~	~~10.1~~	~~10.8~~	~~11.5~~	~~12.1~~	~~12.7~~	~~13.2~~	~~13.8~~	~~14.3~~	~~14.8~~	~~15.3~~	~~15.8~~
	~~Metal~~	~~1.2~~	~~1.4~~	~~2.1~~	~~2.7~~	~~3.2~~	~~3.7~~	~~4.1~~	~~4.4~~	~~4.7~~	~~5.0~~	~~5.2~~	~~5.4~~	~~5.6~~	~~5.8~~	~~5.9~~	~~6.1~~	~~6.2~~	~~6.3~~	~~6.5~~	~~6.6~~	~~6.7~~	~~6.8~~
~~5.5"~~	~~Wood~~	~~1.4~~	~~1.6~~	~~2.6~~	~~3.6~~	~~4.6~~	~~5.5~~	~~6.4~~	~~7.3~~	~~8.1~~	~~8.9~~	~~9.6~~	~~10.3~~	~~11.0~~	~~11.7~~	~~12.4~~	~~13.0~~	~~13.6~~	~~14.2~~	~~14.7~~	~~15.3~~	~~15.8~~	~~16.3~~
	~~Metal~~	~~1.3~~	~~1.4~~	~~2.1~~	~~2.8~~	~~3.3~~	~~3.8~~	~~4.2~~	~~4.6~~	~~4.9~~	~~5.2~~	~~5.4~~	~~5.7~~	~~5.9~~	~~6.1~~	~~6.3~~	~~6.4~~	~~6.6~~	~~6.7~~	~~6.8~~	~~7.0~~	~~7.1~~	~~7.2~~

~~All furring thickness values given are actual dimensions~~

~~All values include .5" gypboard on the inner surface, interior surface resistances not included~~

~~? 24" OC Furring~~

~~? 24 Gage, Z-type Metal Furring~~

~~? Douglas-Fir Larch Wood Furring, density = 34.9 lb/cu.ft~~

~~? Insulation assumed to fill the furring space~~

~~[Source: Berkeley Solar Group; Concrete Masonry Association of California and Nevada]~~

Table B-7: Framed Wall/Floor/Ceiling Assembly U-Values

Reference Name: W.0.2x4.16

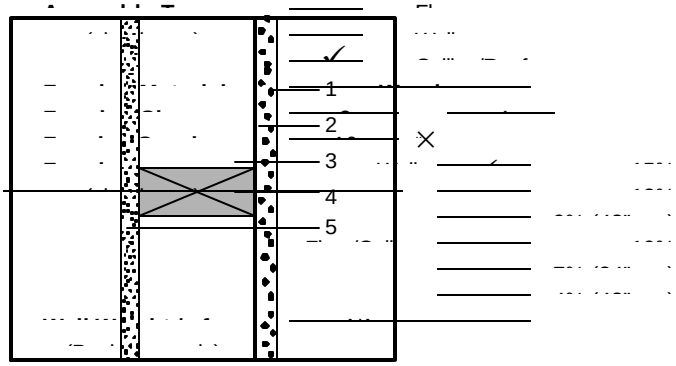

Sketch of Construction Assembly

List of Construction Components	R-Value	
	Cavity (R_c)	Frame (R_f)

Framing Adjustment Calculation:

$$\left[\left(\frac{1}{2.390}\right) \times \left(\frac{1-15/100}{1-(Fr.\% \div 100)}\right)\right] + \left[\left(\frac{1}{5.005}\right) \times \left(\frac{15/100}{Fr.\% \div 100}\right)\right] = \frac{1}{0.385} = 2.593$$

$1 \div R_c$ $1 \div R_f$ $1 \div$ Total U-

R_c R_f **0.385** **Total U**

Total R-Value

Reference Name: W.0.S2x4.16

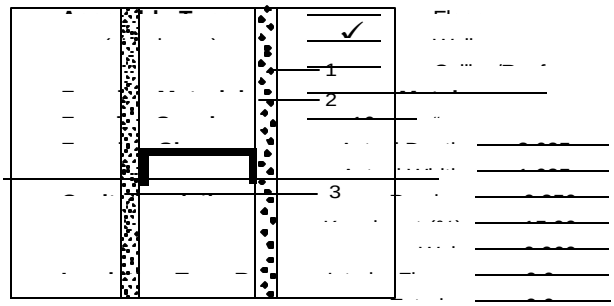

Sketch of Construction Assembly

List of Construction Components	R-Value

From EZFRAME Calculation: =

Reference Name: W.0.2x4.24 2.23

1÷Total U

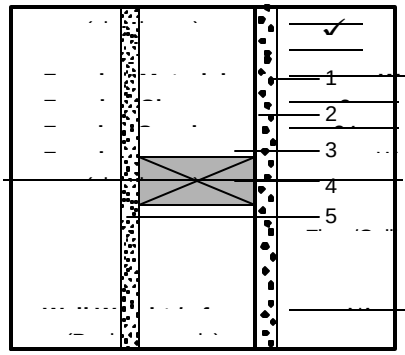

Sketch of Construction Assembly

List of Construction Components	R-Value	
	Cavity (R_c)	Frame (R_f)

Framing Adjustment Calculation:

$$\left[\left(\frac{1}{2.390}\right) \times \left(\frac{1-12/100}{1-(Fr.\% \div 100)}\right)\right] + \left[\left(\frac{1}{5.005}\right) \times \left(\frac{12/100}{Fr.\% \div 100}\right)\right] = \frac{1}{0.392} = 2.549$$

1÷R c 1÷R f 1÷Total U

0.392 **Total R-Value**

Reference Name: W.0.S2x4.24

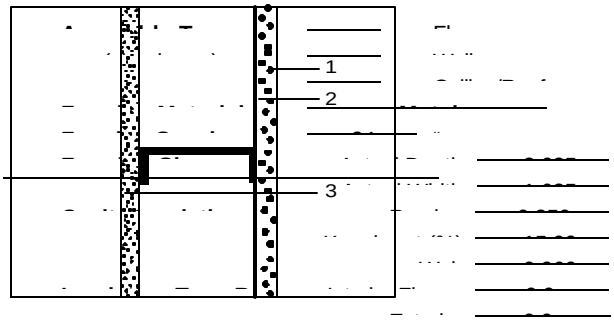

Sketch of Construction Assembly

List of Construction Components	R-Value
	0.443

Calculation:

From EZFRAME – 2.260

1/0.443 = **Total R-Value**

1/Total U

Reference Name: W.7.2x4.16

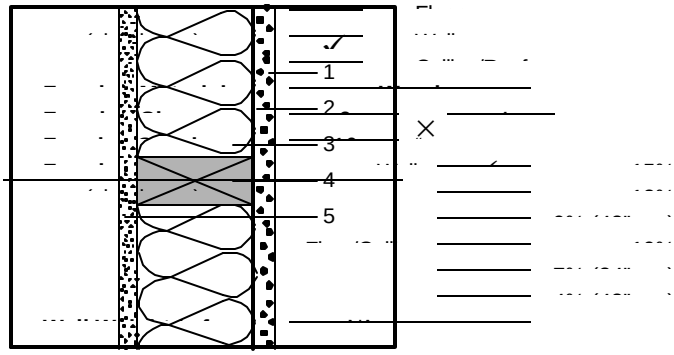

Sketch of Construction Assembly

List of Construction Components	R-Value	
	Cavity (R_c)	Frame (R_f)
	c	f

~~Framing Adjustment Calculation:~~

$$\left[\left(\frac{1}{8.540}\right) \times \left(\frac{1-15/100}{1-(Fr.\% \div 100)}\right)\right] + \left[\left(\frac{1}{5.005}\right) \times \left(\frac{15/100}{Fr.\% \div 100}\right)\right] = \frac{1}{0.130} = 7.69$$

1÷R c 1÷R f 1÷Total U

0.130

Total U

7.69

Total R-Value

~~*Reference Name:* W.7.S2x4.16~~

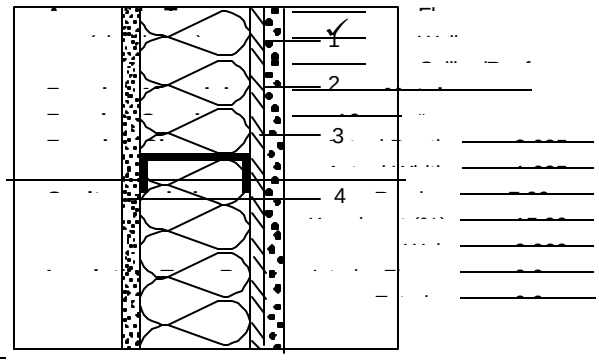

~~Sketch of Construction Assembly~~

~~List of Construction Components~~	~~R-Value~~

~~Calculation:~~

From EZFRAME

$$\frac{1}{0.125} = 7.990$$

1÷Total U

0.125

Total U

7.990

Total R-Value

~~*Reference Name:* W.7.2x4.24~~

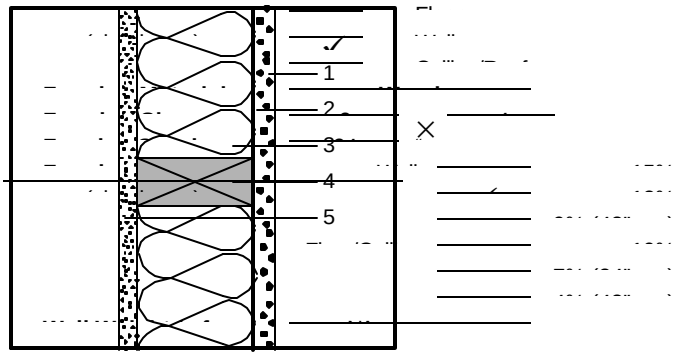

~~Sketch of Construction Assembly~~

List of Construction Components	R-Value	
	Cavity (R_c)	Frame (R_f)

Framing Adjustment Calculation:

$$\left[\left(\frac{1}{1 \div R_c}\right) \times \left(\frac{1-12/100}{1-(Fr.\% \div 100)}\right)\right] + \left[\left(\frac{1}{1 \div R_f}\right) \times \left(\frac{12/100}{Fr.\% \div 100}\right)\right] = \frac{1}{1 \div \text{Total U}} = \frac{1}{0.127} = 7.874$$

0.127

Total R-Value

Reference Name: W.7.S2x4.24

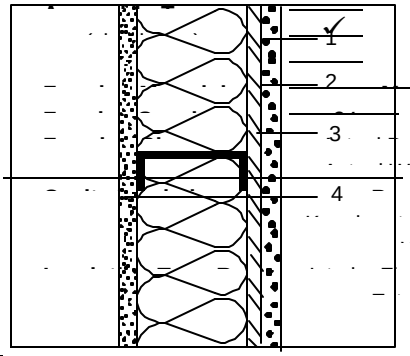

Sketch of Construction Assembly

List of Construction Components	R-Value

Calculation:

From EZFRAME

$$\frac{1}{1 \div \text{Total U}} = \frac{1}{0.117} = 8.530$$

0.117

Total R-Value

Reference Name: W.11.2x4.16

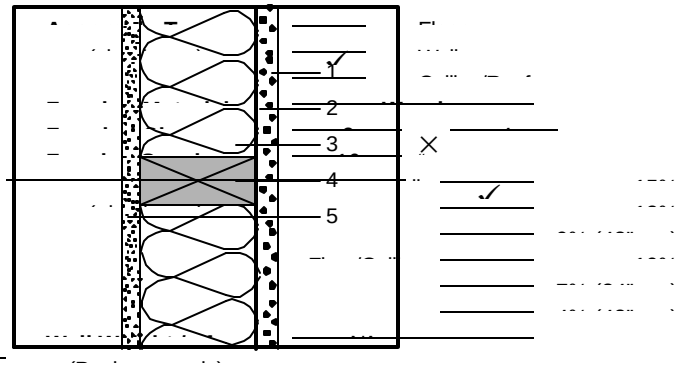

Sketch of Construction Assembly

List of Construction Components	R-Value	
	Cavity (R_c)	Frame (R_f)

Framing Adjustment Calculation:

$$\left[\left(\frac{1}{12.540}\right) \times \left(\frac{1-15/100}{1-(Fr.\% \div 100)}\right)\right] + \left[\left(\frac{1}{5.005}\right) \times \left(\frac{15/100}{Fr.\% \div 100}\right)\right] = \frac{1/0.098}{1 \div \text{Total U-}} = \frac{10.204}{\text{Total R-Value}}$$

$1 \div R_c$ $1 \div R_f$

c	f
0.098	

Total U

Reference Name: W.11.S2x4.16

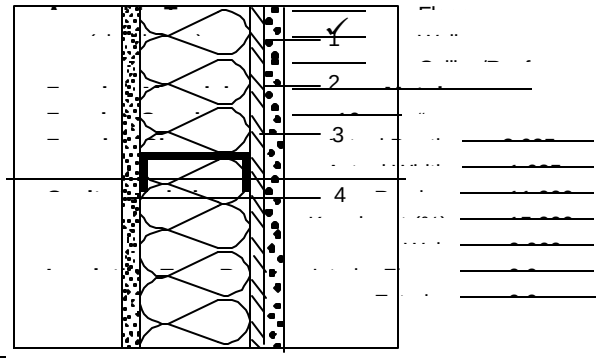

Sketch of Construction Assembly

List of Construction Components	R-Value

0.096

Calculation:
From EZFRAME

Reference Name: W.11.2x4.24

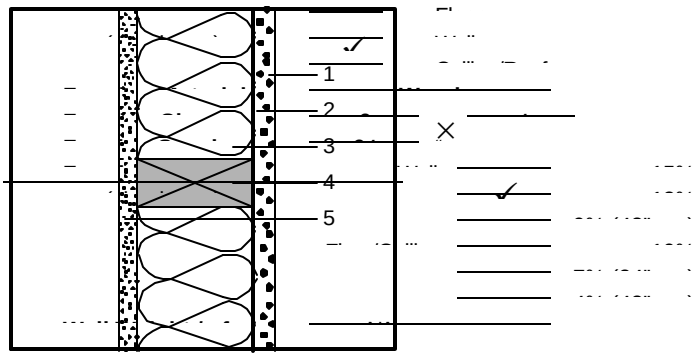

Sketch of Construction Assembly

List of Construction Components	R-Value	
	Cavity (R_c)	Frame (R_f)

Framing Adjustment Calculation:

[(1/12.540)	× (1-12/100)]	+ [(1/5.005)	× (12/100)]	=	c f 0.094	
1÷R_c	1-(Fr.% ÷100)	1÷R_f	Fr.% ÷100	=	10.638	
			1/0.094		**Total R-Value**	
			1÷Total U-			

Reference Name: W.11.S2x4.24

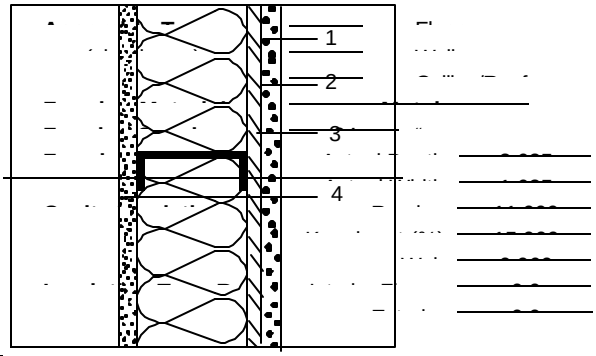

Sketch of Construction Assembly

List of Construction Components	R-Value
	0.090

Calculation:

From EZFRAME = **Total U**

11.140

1/0.090 = **Total R-Value**

1÷Total U

Reference Name: W.13.2x4.16

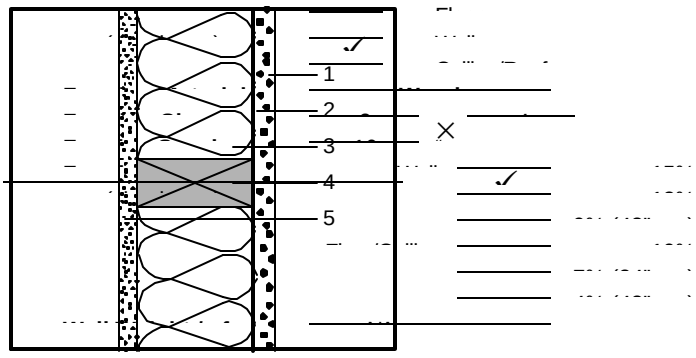

Sketch of Construction Assembly

List of Construction Components	R-Value	
	Cavity (R_c)	Frame (R_f)
	c	f

Framing Adjustment Calculation:

[(1/14.540)	× (1-15/100)]	+ [(1/5.005)	× (15/100)]	=	**0.088**
1÷R_c	1-(Fr.% ÷100)	1÷R_f	Fr.% ÷100	=	11.364
			1/0.088		**Total R-Value**
			1÷Total U-		

Reference Name: W.13.S2x4.16

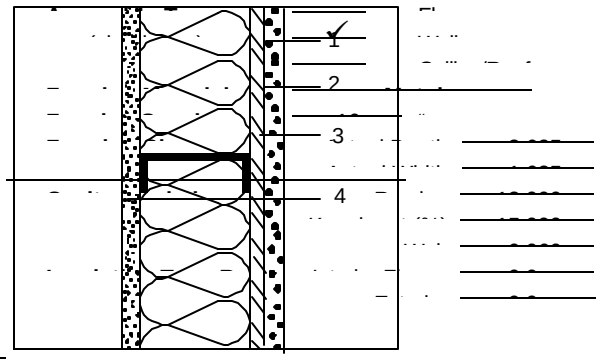

Sketch of Construction Assembly

List of Construction Components	R-Value

Calculation:

From EZFRAME	=	**0.081**
		12.330
		Total R-Value
		1/0.081
		1÷Total U-

Reference Name: W.13.2x4.24

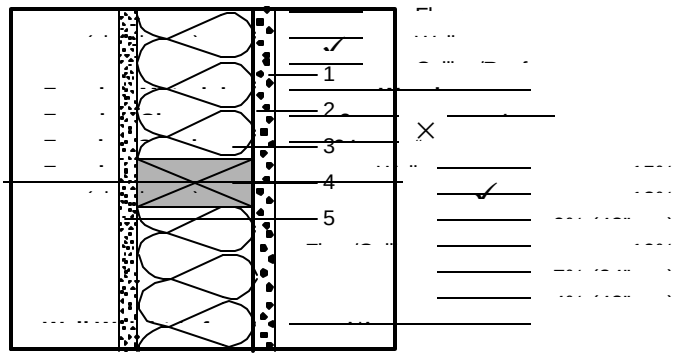

Sketch of Construction Assembly

List of Construction Components	R-Value	
	Cavity (R_c)	Frame (R_f)

Framing Adjustment Calculation:

								c f
							=	**0.084**
[(1/14.540)	×	(1-12/100)]	+	[(1/5.005)	×	(12/100)]		
$1 \div R_c$		1-(Fr.% ÷100)		$1 \div R_f$		Fr.% ÷100	=	11.905
						1/0.084		**Total R-Value**
						1÷Total U		

Reference Name: W.13.S2x4.24

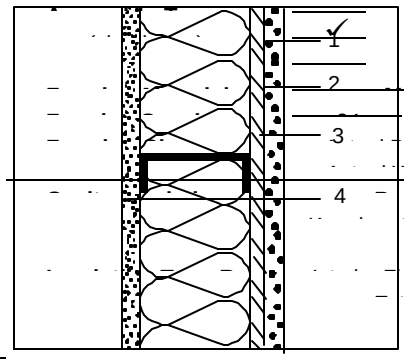

Sketch of Construction Assembly

List of Construction Components	R-Value

Calculation:

		0.087
From EZFRAME	=	11.460
1/0.087	=	**Total R-Value**
1÷Total U		

Reference Name: WP.14.2x4.48

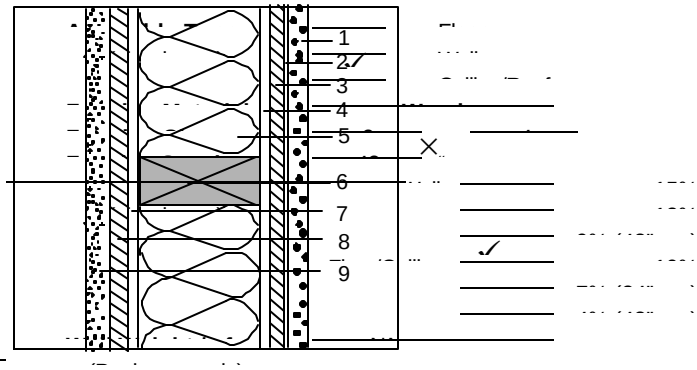

Sketch of Construction Assembly

List of Construction Components	R-Value	
	Cavity (R_c)	Frame (R_f)

Framing Adjustment Calculation:

	×		+		×	=
[(1/18.036)	(1-9/100)]		[(1/7.545)	(9/100)]		
$1 \div R_c$	1-(Fr.% ÷100)		$1 \div R_f$	Fr.% ÷100		=
			1/0.062			
			1÷Total U			

c f

0.062

Total U

16.129

Total R-Value

Reference Name: WP.14.S2x4.48

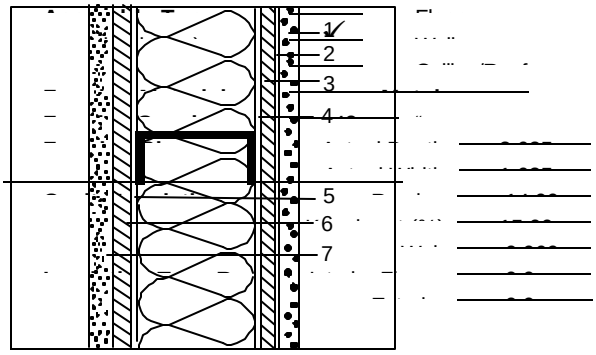

Sketch of Construction Assembly

List of Construction Components	R-Value

Calculation =

Reference Name: W.15.2x4.16

1/0.062

1÷Total U

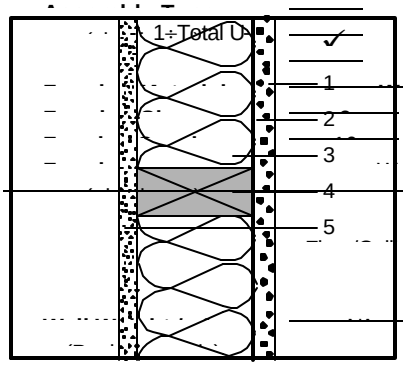

Sketch of Construction Assembly

List of Construction Components	R-Value	
	Cavity (R_c)	Frame (R_f)

Framing Adjustment Calculation:

$$\left[\left(\frac{1}{1+R_c}\right) \times \left(\frac{1}{1-(Fr.\% \div 100)}\right)\right] + \left[\left(\frac{1}{1+R_f}\right) \times \left(\frac{Fr.\% \div 100}{}\right)\right] = \frac{1}{1+\text{Total U}} = \frac{1}{0.081} = \frac{12.346}{\text{Total R-Value}}$$

0.081

Reference Name: W.15.S2x4.16

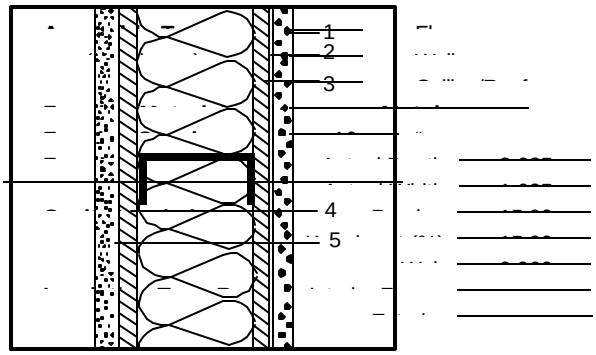

Sketch of Construction Assembly

List of Construction Components	R-Value
	0.080

Calculation:
From EZFRAME

1/0.080

1÷Total U

Total U

12.510

Total R-Value

Reference Name: W.15.2x4.24

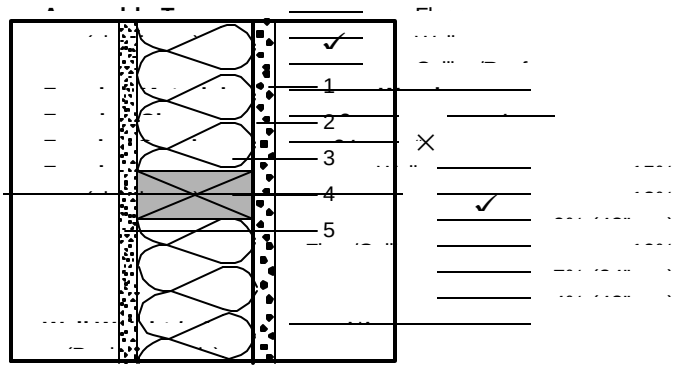

Sketch of Construction Assembly

List of Construction Components	R-Value	
	Cavity (R_c)	Frame (R_f)

~~Framing Adjustment Calculation:~~

$$[(\frac{1}{1+R_c}) \times (\frac{1-12/100}{1-(Fr.\% \div 100)})] + [(\frac{1}{1+R_f}) \times (\frac{12/100}{Fr.\% \div 100})] = \frac{1}{1+\text{Total U-}} = \frac{1}{0.077} = 12.987$$

Total R-Value

~~Reference Name:~~ ~~W.15.S2x4.24~~

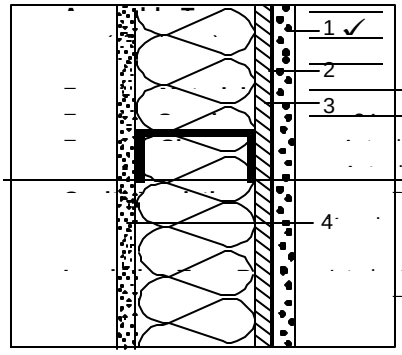

~~Sketch of Construction Assembly~~

~~List of Construction Components~~	~~R-Value~~

~~Calculation:~~

From EZFRAME

$$\frac{1}{1+\text{Total U-}} = \frac{1}{0.074} = 13.470$$

Total R-Value

~~Reference Name:~~ ~~W.19.2x6.16~~

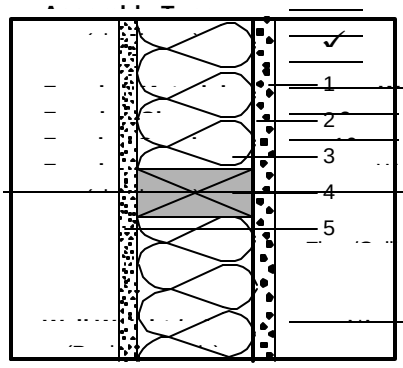

Sketch of Construction Assembly

List of Construction Components	R-Value	
	Cavity (R_c)	Frame (R_f)
	c	f

Framing Adjustment Calculation:

$$\left[\left(\frac{1}{1 \div R_c}\right) \times \left(\frac{1-15/100}{1-(Fr.\% \div 100)}\right)\right] + \left[\left(\frac{1}{1 \div R_f}\right) \times \left(\frac{15/100}{Fr.\% \div 100}\right)\right] = \frac{1}{1 \div \text{Total U}} = \frac{1}{0.063} = 15.873$$

0.063

Total U

15.873

Total R-Value

Reference Name: W.19.S2x6.16

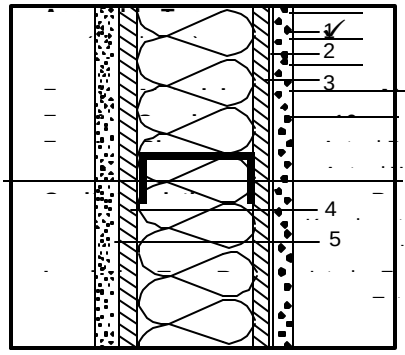

Sketch of Construction Assembly

List of Construction Components	R-Value

0.064

Total U

Calculation:
From EZFRAME

$$\frac{1}{1 \div \text{Total U}} = \frac{1}{0.064} = 15.530$$

15.530

Total R-Value

Reference Name: W.19.2x6.24

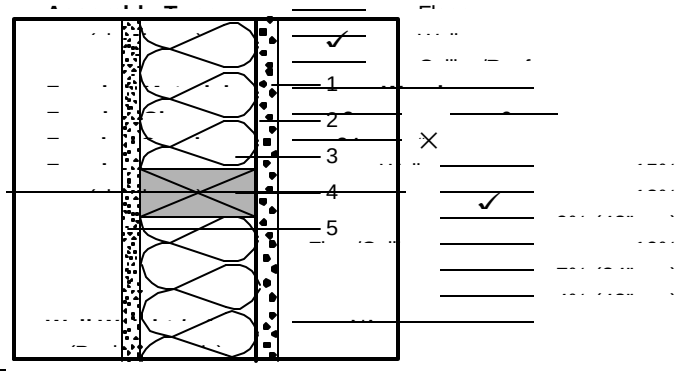

Sketch of Construction Assembly

List of Construction Components	R-Value	
	Cavity (R_c)	Frame (R_f)

Framing Adjustment Calculation:

$$[(\frac{1}{20.540}) \times (\frac{1-12/100}{1-(Fr.\% \div 100)})] + [(\frac{1/6.985}{1 \div R_f}) \times (\frac{12/100}{Fr.\% \div 100})] = \frac{1/0.060}{1 \div \text{Total U-}} = \frac{16.666}{\text{Total R-Value}}$$

c	f
0.060	

Reference Name: W.19.S2x6.24

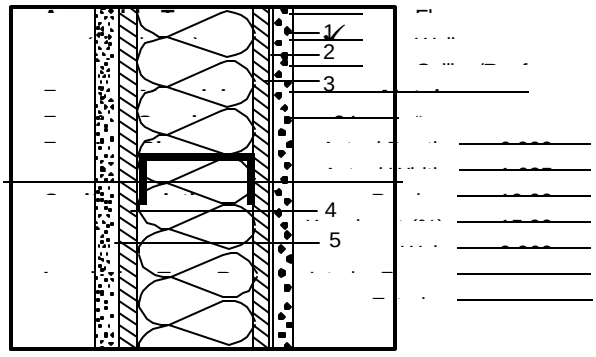

Sketch of Construction Assembly

List of Construction Components	R-Value

Calculation:
From EZFRAME

Reference Name: W.21.2x6.16

1/0.060

1÷Total U

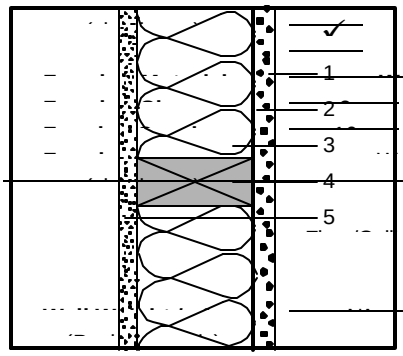

Sketch of Construction Assembly

List of Construction Components	R-Value	
	Cavity (R_c)	Frame (R_f)

Framing Adjustment Calculation:

[(1/22.540)	×	(1-15/100)]	+	[(1/6.985)	×	(15/100)]	=	0.059
1÷R_c		1-(Fr.% ÷100)		1÷R_f		Fr.% ÷100		Total U
							=	16.949
						1/0.059		Total R-Value
						1÷Total U		

Reference Name: W.21.S2x6.16

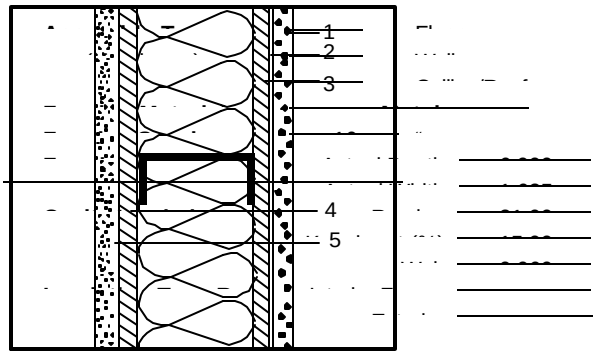

Sketch of Construction Assembly

List of Construction Components	R-Value
	0.057

Calculation:
From EZFRAME

1/0.057

1÷Total U

17.440

Total R-Value

Reference Name: W.21.2x6.24

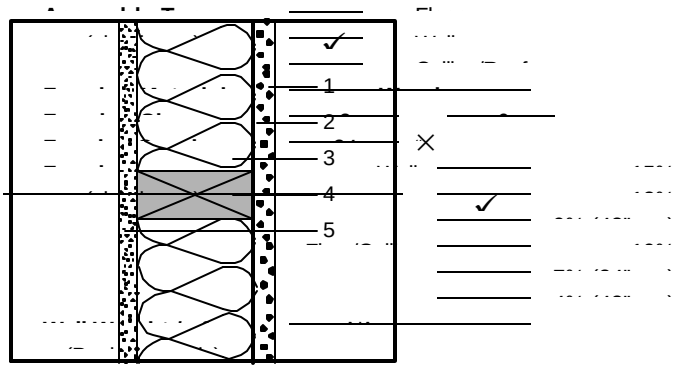

Sketch of Construction Assembly

List of Construction Components	R-Value	
	Cavity (R_c)	Frame (R_f)

Framing Adjustment Calculation:

[(1/22.540) × (1-12/100)] + [(1/6.985) × (12/100)] =

1÷Pc 1-(Fr.% ÷100) 1÷Rf Fr.% ÷100

1/0.056 =

1÷Total U-

c f

0.056

Total U

17.857

Total R-Value

Reference Name: W.21.S2x6.24

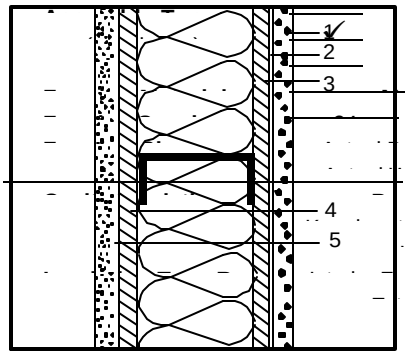

Sketch of Construction Assembly

List of Construction Components	R-Value

0.053

Total U

Calculation:
From EZFRAME

18.720

Total R-Value

Reference Name: WP.22.2x6.48

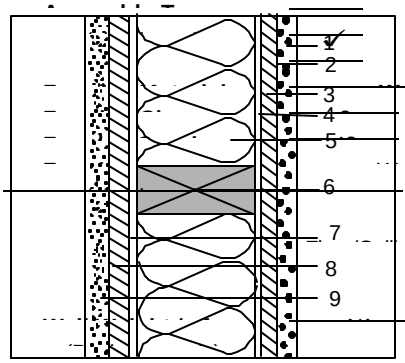

Sketch of Construction Assembly

List of Construction Components	R-Value	
	Cavity (R_c)	Frame (R_f)

Framing Adjustment Calculation:

$$\left[\left(\frac{1}{1+R_c}\right) \times \left(\frac{1-9/100}{1-(Fr.\% \div 100)}\right)\right] + \left[\left(\frac{1}{1+R_f}\right) \times \left(\frac{9/100}{Fr.\% \div 100}\right)\right] = \boxed{0.049}$$

$$= \frac{1/0.049}{1 \div \text{Total U-}} = \frac{20.408}{\textbf{Total R-Value}}$$

Reference Name: WP.22.S2x6.48

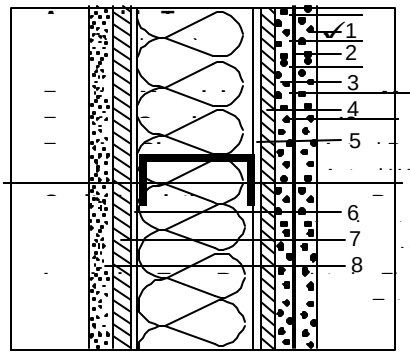

Sketch of Construction Assembly

List of Construction Components	R-Value

Calculation:
From EZFRAME = **0.044**

$$= \frac{22.83}{\textbf{Total U}}$$

Reference Name: R.0.2x6.16

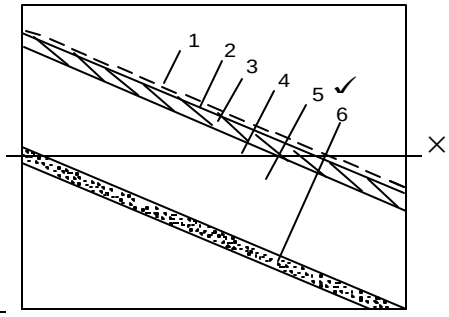

Sketch of Construction Assembly

List of Construction Components	R-Value	
	Cavity (R_c)	Frame (R_f)

Framing Adjustment Calculation:

$$\left[\left(\frac{1}{1+R_c}\right) \times \left(\frac{1-10/100}{1-(Fr.\% \div 100)}\right)\right] + \left[\left(\frac{1}{1+R_f}\right) \times \left(\frac{10/100}{Fr.\% \div 100}\right)\right] = \frac{1}{1+\text{Total U-}} = \frac{1}{0.297} = 3.367$$

0.297

Total U-

Total R-Value

Reference Name: R.0.S2X6.16

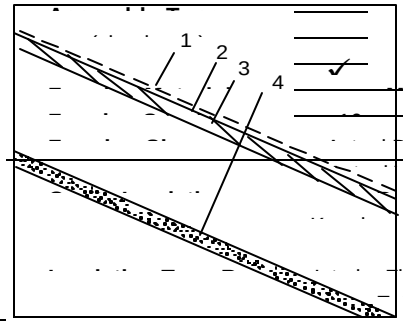

Sketch of Construction Assembly

List of Construction Components	R-Value

0.323

Total U-

~~Calculation:~~
From EZFRAME

1/0.323

1÷Total U-

Reference Name: R.0.2x4.24

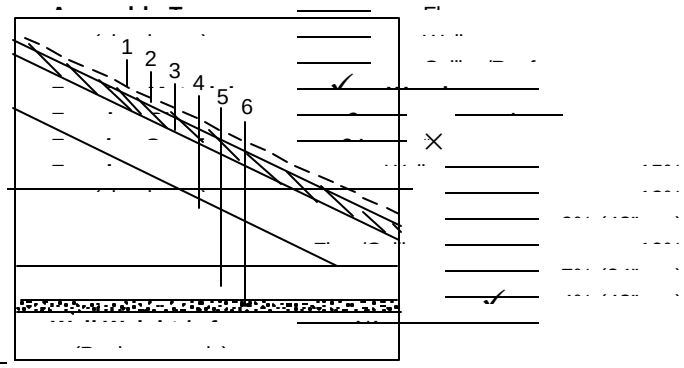

Sketch of Construction Assembly

List of Construction Components	R-Value	
	Cavity (R_c)	Frame (R_f)

Framing Adjustment Calculation:

$$\left[\left(\frac{1}{1+R_c}\right) \times \left(\frac{1-7/100}{1-(Fr.\% \div 100)}\right)\right] + \left[\left(\frac{1}{1+R_f}\right) \times \left(\frac{7/100}{Fr.\% \div 100}\right)\right] = \frac{1}{1+\text{Total U-}} = \frac{1}{0.305} = 3.279$$

0.305

Total R-Value

Reference Name: R.0.S2X4.24

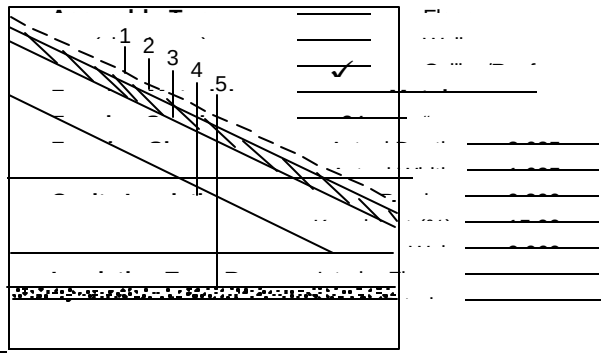

Sketch of Construction Assembly

List of Construction Components	R-Value

~~Calculation:~~

From EZFRAME

1/0.316

1÷Total U-

~~*Reference Name:* R.11.2x6.16~~

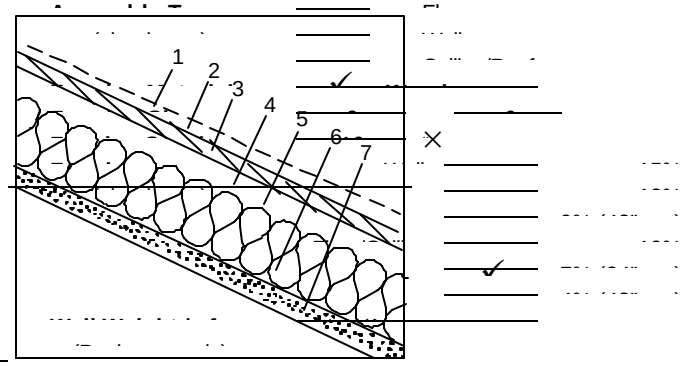

~~Sketch of Construction Assembly~~

~~List of Construction Components~~	~~R-Value~~	
	~~Cavity (R_c)~~	~~Frame (R_f)~~

~~Framing Adjustment Calculation:~~

$$[(\frac{1/14.150}{1 \div R_c}) \times (\frac{1-10/100}{1-(Fr.\% \div 100)})] + [(\frac{1/7.815}{1 \div R_f}) \times (\frac{10/100}{Fr.\% \div 100})] = \frac{1/0.076}{1 \div \text{Total U-}} = \frac{13.157}{\textbf{Total R-Value}}$$

0.076

~~*Reference Name:* R.11.S2X6.16~~

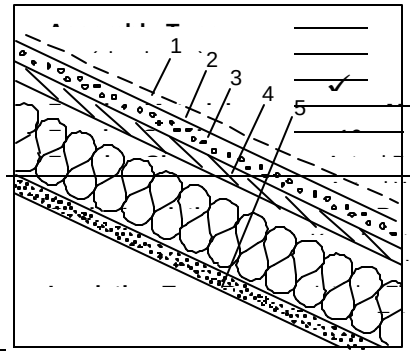

Sketch of Construction Assembly

List of Construction Components	R-Value
	0.071

Calculation:
From EZFRAME

	14.060
=	**Total R-Value**

Reference Name: 1/0.071 = R.11.2x4.24

1÷Total U=

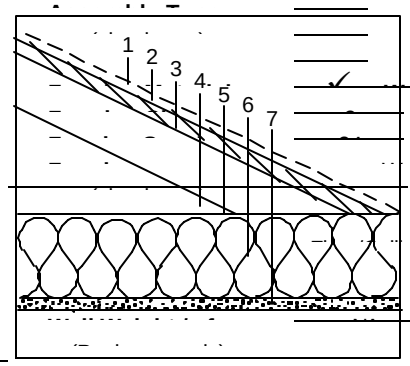

Sketch of Construction Assembly

List of Construction Components	R-Value	
	Cavity (R_c)	Frame (R_f)
	c	**f**

Framing Adjustment Calculation:

$$[(\frac{1}{14.160}) \times (\frac{1-7}{100})] + [(\frac{1}{6.625}) \times (\frac{7}{100})] = \boxed{0.076}$$

$1 \div R_c$ $1-(Fr.\% \div 100)$ $1 \div R_f$ $Fr.\% \div 100$

Total U

$$\frac{1}{0.076} = \frac{13.157}{\text{Total R-Value}}$$

$1 \div$ Total U

Reference Name: R.11.S2X4.24

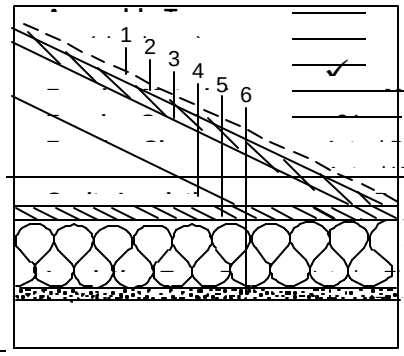

Sketch of Construction Assembly

List of Construction Components	R-Value

$$\boxed{0.069}$$

Calculation:
From EZFRAME

Total U

$$\frac{1}{0.069} = \frac{14.500}{\text{Total R-Value}}$$

$1 \div$ Total U

Reference Name: R.13.2x6.16

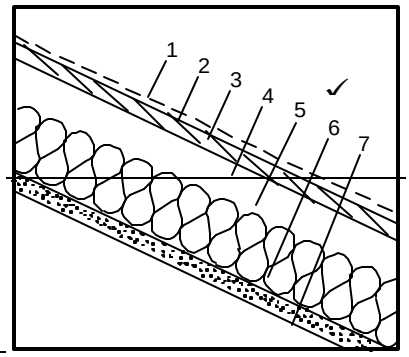

Sketch of Construction Assembly

List of Construction Components	R-Value	
	Cavity (R_c)	Frame (R_f)

Framing Adjustment Calculation:

$$\left[\left(\frac{1}{16.150}\right) \times \left(\frac{1-10/100}{1-(Fr.\% \div 100)}\right)\right] + \left[\left(\frac{1}{7.815}\right) \times \left(\frac{10/100}{Fr.\% \div 100}\right)\right] = \frac{1}{0.069} = 14.493$$

R_c R_f 1÷Total U

0.069	
Total U	
14.493	
Total R-Value	

Reference Name: R.13.S2X6.16

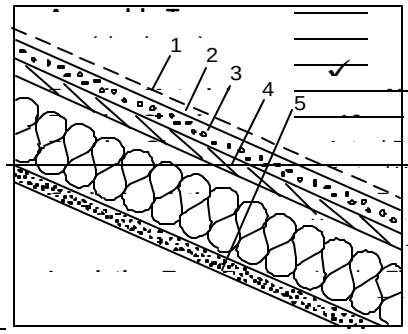

Sketch of Construction Assembly

List of Construction Components	R-Value

~~Calculation:~~

From EZFRAME

1/0.062

1÷Total U-

Reference Name: R.13.2x4.24

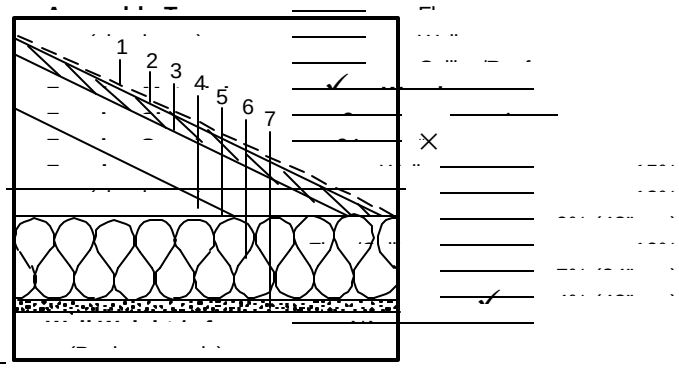

Sketch of Construction Assembly

List of Construction Components	R-Value	
	Cavity (R_c)	Frame (R_f)

Framing Adjustment Calculation:

$$\left[\left(\frac{1}{1 \div R_c}\right) \times \left(\frac{1-7/100}{1-(Fr.\% \div 100)}\right)\right] + \left[\left(\frac{1}{1 \div R_f}\right) \times \left(\frac{7/100}{Fr.\% \div 100}\right)\right] = \frac{1}{1 \div \text{Total U-}} = \frac{1}{14.705}$$

c	f
0.068	

Total U

Total R-Value

Reference Name: R.13.S2X4.24

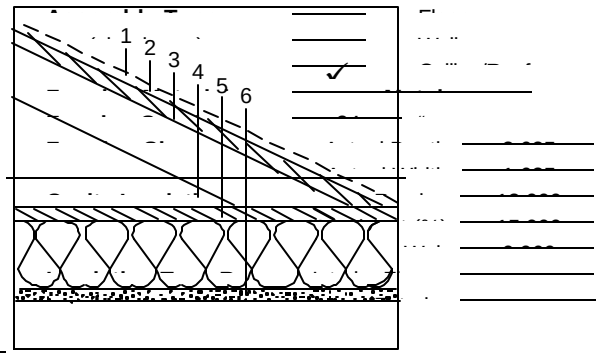

Sketch of Construction Assembly

List of Construction Components	R-Value

~~Calculation:~~

From EZFRAME

1/0.066

1÷Total U

~~*Reference Name:* RP.14.2x4.48~~

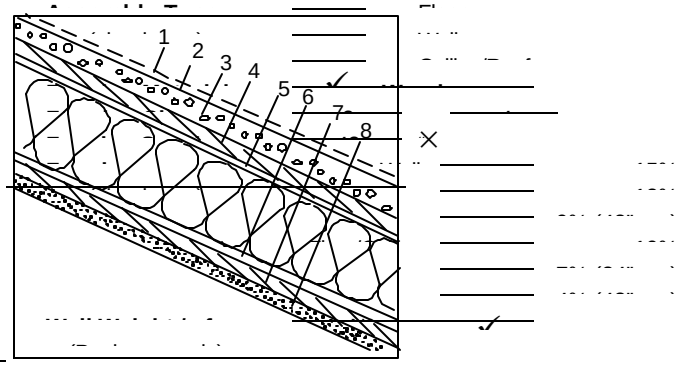

~~Sketch of Construction Assembly~~

~~List of Construction Components~~	~~R-Value~~	
	~~Cavity (R_c)~~	~~Frame (R_f)~~

~~Framing Adjustment Calculation:~~

$$[(\frac{1}{18.236}) \times (1-\frac{4}{100})] + [(\frac{1}{7.745}) \times (\frac{4}{100})] = \frac{1}{0.058} = \frac{17.241}{}$$

1÷R c; 1-(Fr.% ÷100); 1÷R f; Fr.% ÷100; 1÷Total U

0.058

Total R-Value

~~*Reference Name:* RP.14.S2x4.48~~

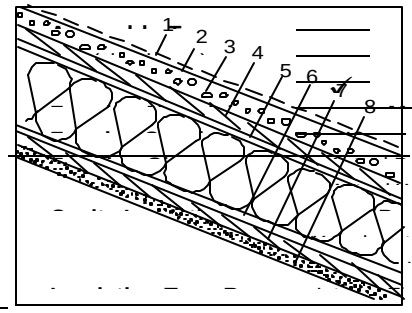

~~Sketch of Construction Assembly~~

~~List of Construction Components~~	~~R-Value~~
	0.055

~~Calculation:~~
From EZFRAME

1/0.055

= 18.130

Total R-Value

Reference Name: R.19.2x8.16

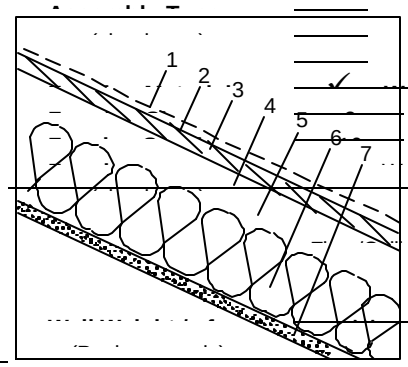

Sketch of Construction Assembly

List of Construction Components	R-Value	
	Cavity (R_c)	Frame (R_f)

Framing Adjustment Calculation:

$$\left[\left(\frac{1}{22.130}\right) \times \left(\frac{1-10/100}{1-(Fr.\% \div 100)}\right)\right] + \left[\left(\frac{1}{9.548}\right) \times \left(\frac{10/100}{Fr.\% \div 100}\right)\right] = \frac{1}{0.051} = 19.608$$

1÷R$_c$ 1÷R$_f$ 1÷Total U-

c	f
0.051	

Total U

Total R-Value

Reference Name: R.19.S2x8.16

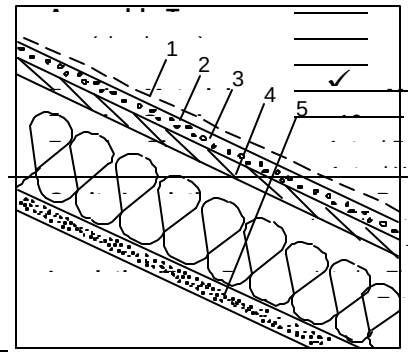

Sketch of Construction Assembly

List of Construction Components	R-Value

~~Calculation:~~

From EZFRAME

1/0.051

1÷Total U

~~*Reference Name:*~~ ~~R.19.2x4.24~~

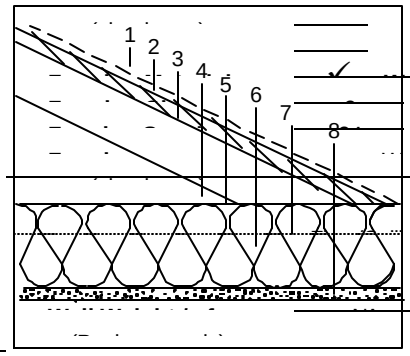

~~Sketch of Construction Assembly~~

~~List of Construction Components~~	~~R-Value~~	
	~~Cavity (R_c)~~	~~Frame (R_f)~~

~~Framing Adjustment Calculation:~~

$$[(\frac{1/22.160}{1 \div R_c}) \times (\frac{1-7/100}{1-(Fr.\% \div 100)})] + [(\frac{1/14.625}{1 \div R_f}) \times (\frac{7/100}{Fr.\% \div 100})] = \frac{1/0.047}{1 \div Total\ U} = \frac{21.277}{\textbf{Total R-Value}}$$

0.047

~~*Reference Name:*~~ ~~R.19.S2x4.24~~

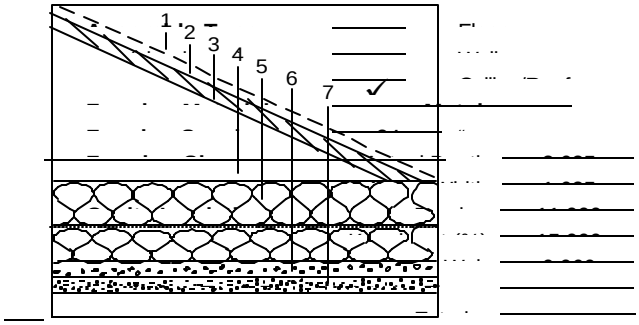

Sketch of Construction Assembly

List of Construction Components	R-Value
	0.044

Calculation:
From EZFRAME

1/0.044

Total U

22.670

Total R-Value

Reference Name: R.22.2x10.16

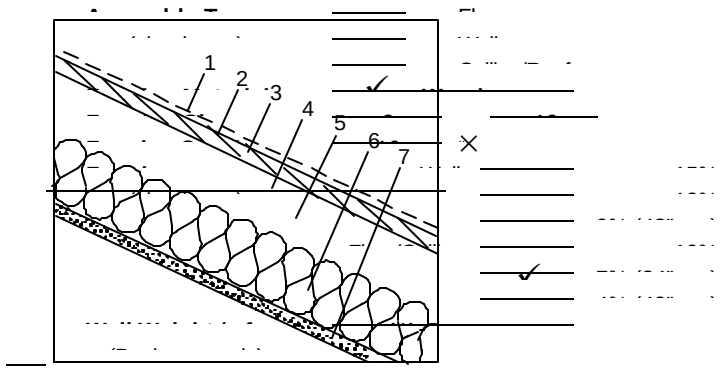

Sketch of Construction Assembly

List of Construction Components	R-Value	
	Cavity (R_c)	Frame (R_f)
	c	**f**

Framing Adjustment Calculation:

$$[(\frac{1}{24.990}) \times (\frac{1-10/100}{1-(Fr.\% \div 100)})] + [(\frac{1}{12.148}) \times (\frac{10/100}{Fr.\% \div 100})] = 0.044$$

$1 \div R_c$ $\quad$ $1 \div R_f$

$$= \frac{1}{0.044} = 22.727$$

$1 \div$ Total U

Total R-Value

Reference Name: R.22.S2x10.16

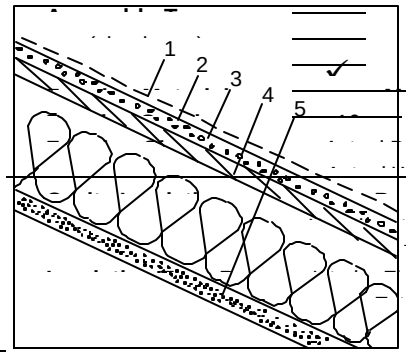

Sketch of Construction Assembly

List of Construction Components	R-Value

Calculation:
From EZFRAME

$$= \frac{1}{0.044} = 22.660$$

$1 \div$ Total U

Total R-Value

Reference Name: R.22.2x4.24

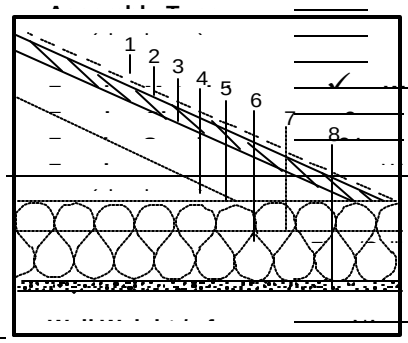

Sketch of Construction Assembly

List of Construction Components	R-Value	
	Cavity (R_c)	Frame (R_f)

Framing Adjustment Calculation:

$$\left[\left(\frac{1}{1+R_c}\right) \times \left(\frac{1-7/100}{1-(Fr.\% \div 100)}\right)\right] + \left[\left(\frac{1}{1+R_f}\right) \times \left(\frac{7/100}{Fr.\% \div 100}\right)\right] = \frac{1}{1+\text{Total U-}} = \frac{1}{0.041} = \frac{1}{24.390}$$

0.041

Total U-

24.390

Total R-Value

Reference Name: R.22.S2x4.24

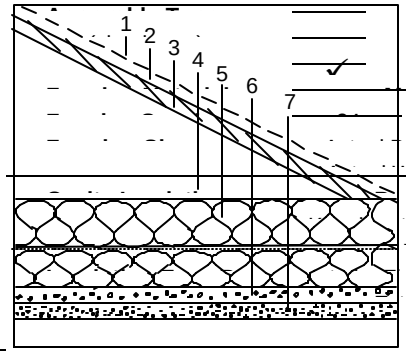

Sketch of Construction Assembly

List of Construction Components	R-Value

0.039

Total U-

Calculation:
From EZFRAME

$$= \frac{1}{\text{Total U-}} = \frac{1}{0.039} = \frac{1}{25.500}$$

25.500

Total R-Value

Reference Name: 1/0.039 RP.22.2x6.48

1÷Total U

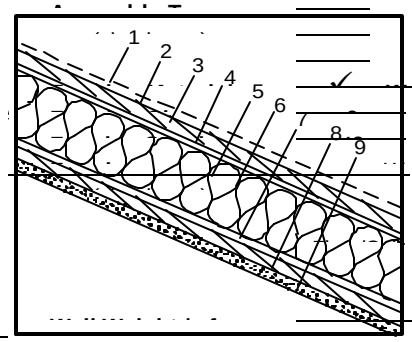

Sketch of Construction Assembly

List of Construction Components	R-Value	
	Cavity (R_c)	Frame (R_f)

Framing Adjustment Calculation:

$$\left[\left(\frac{1}{25.936}\right) \times \left(\frac{1-4/100}{1-(Fr.\% \div 100)}\right)\right] + \left[\left(\frac{1}{9.725}\right) \times \left(\frac{4/100}{Fr.\% \div 100}\right)\right] = \frac{1}{0.041} = 24.390$$

1÷R c; 1÷R f; 1÷Total U

c	f
0.041	

Total U

Total R-Value

Reference Name: RP.22.S2x6.48

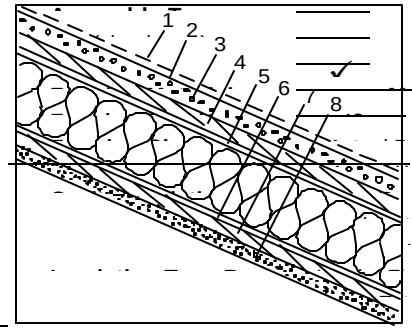

Sketch of Construction Assembly

List of Construction Components	R-Value

Calculation:

From EZFRAME

1/0.039

0.039

25.460

Reference Name: RP.28.2x8.48

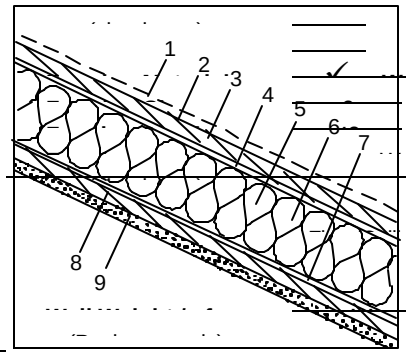

Sketch of Construction Assembly

List of Construction Components	R-Value	
	Cavity (R_c)	Frame (R_f)

Framing Adjustment Calculation:

$$[(\frac{1}{32.674}) \times (1-\frac{4}{100})] + [(\frac{1}{11.458}) \times (\frac{4}{100})] = \frac{1}{0.033}$$

1÷R$_c$ 1-(Fr.% ÷100) 1÷R$_f$ Fr.% ÷100 1÷Total U-

0.033

Total U-

= 30.303

Total R-Value

Reference Name: RP.28.S2x8.48

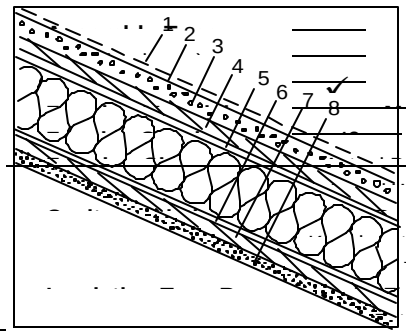

Sketch of Construction Assembly

List of Construction Components	R-Value

Calculation:

From EZFRAME = **0.031**

Reference Name: R.30.2x12.16

1/0.031 = 31.940

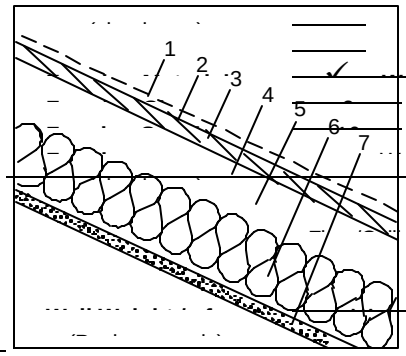

Sketch of Construction Assembly

List of Construction Components	R-Value	
	Cavity (R_c)	Frame (R_f)

c f

Framing Adjustment Calculation:

[(1/33.150) × + [(1/13.508) × (10/100)] = **0.035**

1÷R 1÷R Fr.% ÷100

28.571 = **Total R-Value**

(1-10/100)]

c 1-(Fr.% ÷100) f

1/0.035

1÷Total U-

Reference Name: R.30.S2x12.16

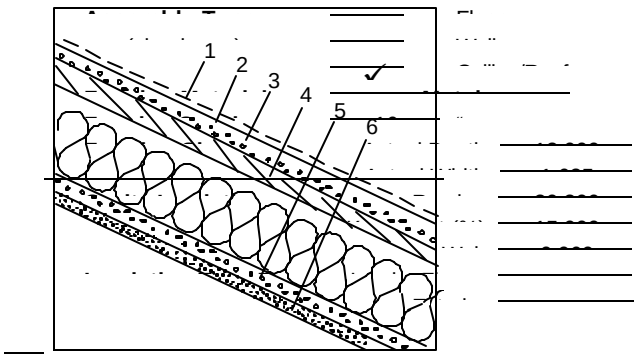

Sketch of Construction Assembly

List of Construction Components	R-Value

	Cavity (R_c)	Frame (R_f)

Framing Adjustment Calculation:

$$\left[\left(\frac{1}{1 \div R_c}\right) \times \left(\frac{1-10/100}{1-(Fr.\% \div 100)}\right)\right] + \left[\left(\frac{1}{1 \div R_f}\right) \times \left(\frac{10/100}{Fr.\% \div 100}\right)\right] = \frac{1}{1 \div \text{Total U-}} = \frac{1}{0.036} = 27.778$$

0.036

Total R-Value

Reference Name: R.30.S2x10.16

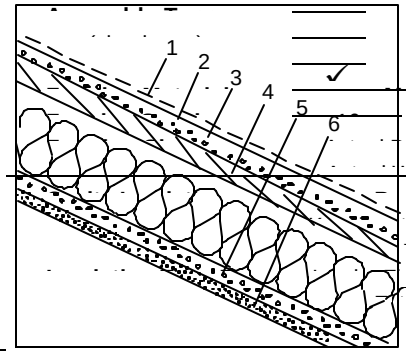

Sketch of Construction Assembly

List of Construction Components	R-Value

Calculation:

From EZFRAME

$$\frac{1}{1 \div \text{Total U-}} = \frac{1}{0.034} = 29.220$$

0.034

Total R-Value

Reference Name: R.30.2x4.24

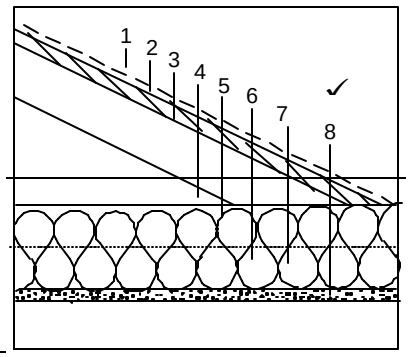

Sketch of Construction Assembly

List of Construction Components	R-Value	
	Cavity (R_c)	Frame (R_f)

Framing Adjustment Calculation:

$$\left[\left(\frac{1}{1+R_c}\right) \times \left(1-\frac{Fr.\%}{100}\right)\right] + \left[\left(\frac{1}{1+R_f}\right) \times \left(\frac{Fr.\%}{100}\right)\right] = \frac{1}{1+\text{Total U-}} = \frac{1}{0.031} = 32.258$$

0.031

Total R-Value

Reference Name: R.30.S2x4.24

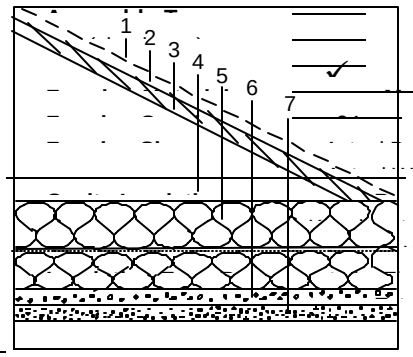

Sketch of Construction Assembly

List of Construction Components	R-Value

~~Calculation:~~

From EZFRAME

1/0.030

Reference Name: RP.35.2x10.48

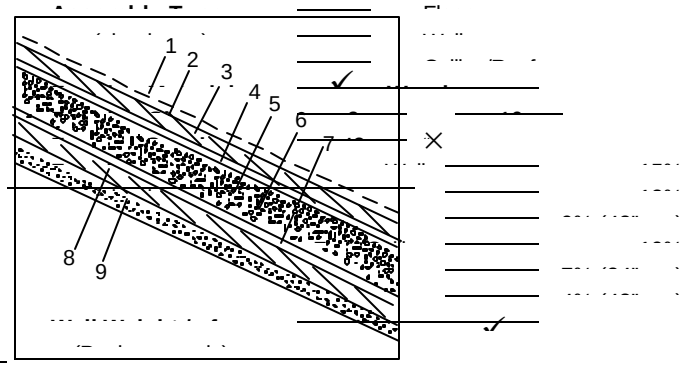

Sketch of Construction Assembly

List of Construction Components	R-Value	
	Cavity (R_c)	Frame (R_f)

Framing Adjustment Calculation:

$$\left[\left(\frac{1}{1+R_c}\right) \times \left(1-\frac{Fr.\%}{100}\right)\right] + \left[\left(\frac{1}{1+R_f}\right) \times \left(\frac{Fr.\%}{100}\right)\right] = \frac{1}{1+\text{Total U-}}$$

$$\frac{1}{0.027} = 37.037$$

Total R-Value

Reference Name: RP.35.S2x10.48

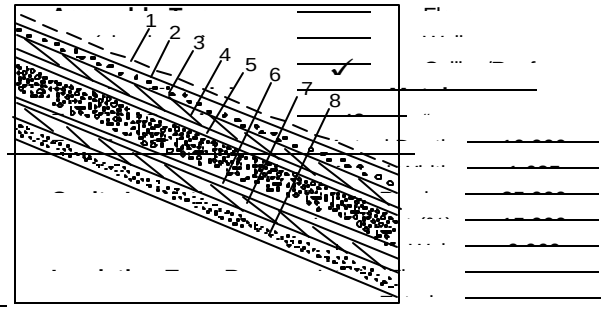

Sketch of Construction Assembly

List of Construction Components	R-Value

Calculation:
From EZFRAME

Reference Name: R.38.2x14.16

1÷Total U

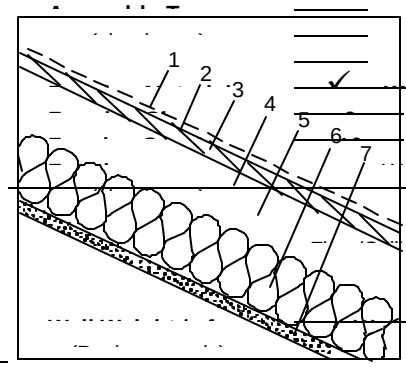

Sketch of Construction Assembly

List of Construction Components	R-Value	
	Cavity (R_c)	Frame (R_f)

Framing Adjustment Calculation:

$$[(\frac{1/41.130}{1 \div R_c}) \times (\frac{1-10/100}{1-(Fr.\% \div 100)})] + [(\frac{1/15.488}{1 \div R_f}) \times (\frac{10/100}{Fr.\% \div 100})] = \frac{1/0.028}{1 \div Total\ U} = \frac{35.714}{Total\ R\text{-}Value}$$

0.028

Reference Name: R.38.S2x14.16

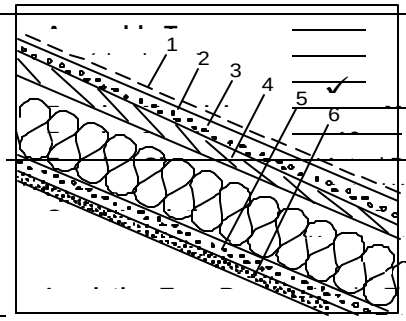

Sketch of Construction Assembly

List of Construction Components	R-Value
	0.027

Calculation:
From EZFRAME

Total U

36.95

=

Total R-Value

1/0.027

Reference Name: R.38.2x12.16

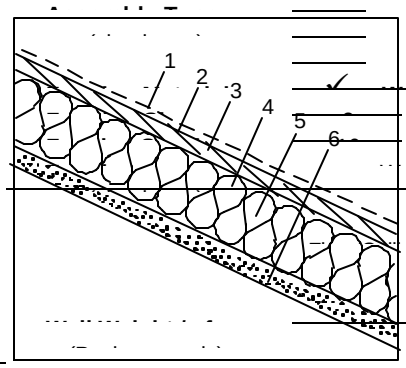

Sketch of Construction Assembly

List of Construction Components	R-Value	
	Cavity (R_c)	Frame (R_f)

~~Framing Adjustment Calculation:~~

$$\left[\left(\frac{1}{40.370}\right) \times \left(\frac{1-10/100}{1-(Fr.\% \div 100)}\right)\right] + \left[\left(\frac{1}{13.508}\right) \times \left(\frac{10/100}{Fr.\% \div 100}\right)\right] = \frac{1}{0.030} = 33.333$$

1÷R c 1÷R f 1÷Total U-

0.030

Total R-Value

~~*Reference Name:* R.38.S2x12.16~~

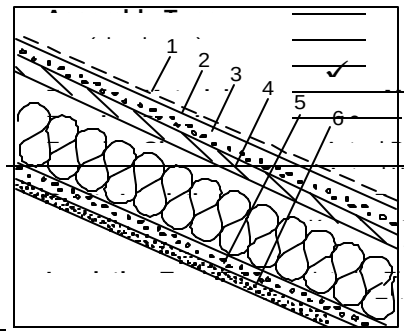

~~Sketch of Construction Assembly~~

~~List of Construction Components~~	~~R-Value~~

0.030

~~Calculation:~~
From EZFRAME

$$\frac{1}{0.030} = 33.38$$

1÷Total U-

Total R-Value

~~*Reference Name:* R.38.2x4.24~~

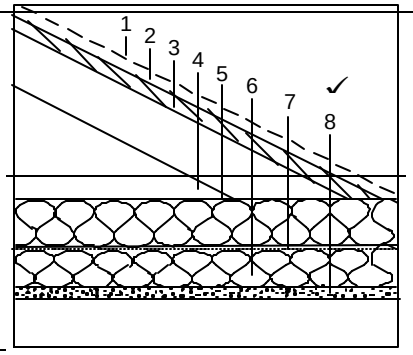

Sketch of Construction Assembly

List of Construction Components	R-Value	
	Cavity (R_c)	Frame (R_f)
	c	f

Framing Adjustment Calculation:

$$\left[\left(\frac{1}{1 \div R_c}\right) \times \left(\frac{1-7/100}{1-(Fr.\% \div 100)}\right)\right] + \left[\left(\frac{1}{1 \div R_f}\right) \times \left(\frac{7/100}{Fr.\% \div 100}\right)\right] = \boxed{0.025}$$

Total U

$$= \frac{1/0.025}{1 \div \text{Total U}} = \frac{40.000}{\text{Total R-Value}}$$

Reference Name: R.38.S2x4.24

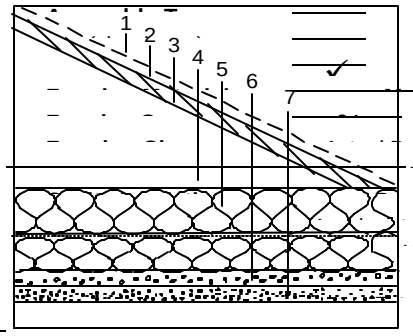

Sketch of Construction Assembly

List of Construction Components	R-Value

0.023

Calculation:

From EZFRAME

1/0.023

1÷Total U

Reference Name: R.49.2x4.16

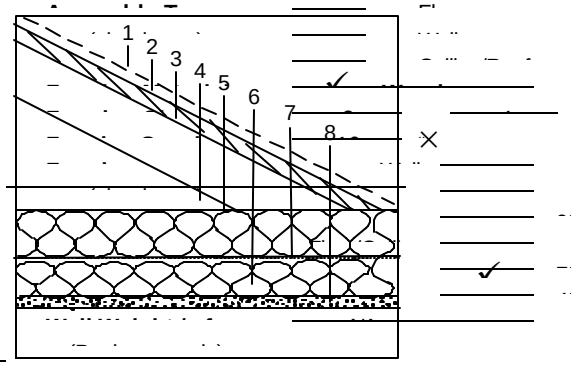

Sketch of Construction Assembly

List of Construction Components	R-Value	
	Cavity (R_c)	Frame (R_f)

Framing Adjustment Calculation:

$$[(\frac{1/52.160}{1 \div R_c}) \times (\frac{1-10/100}{1-(Fr.\% \div 100)})] + [(\frac{1/44.625}{1 \div R_f}) \times (\frac{10/100}{Fr.\% \div 100})] = \frac{1/0.019}{1 \div Total\ U} = \frac{52.632}{Total\ R\text{-}Value}$$

0.019

Total U

Total R-Value

Reference Name: R.49.S2x4.16

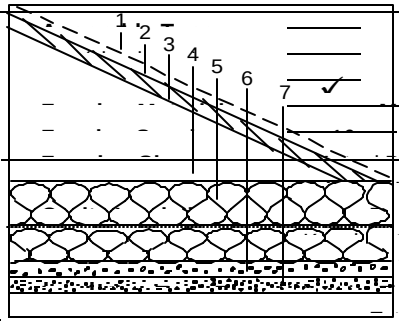

Sketch of Construction Assembly

List of Construction Components	R-Value
	0.019

Calculation:
From EZFRAME

1/0.019

1÷Total U

Total U

–

=

53.02

Total R-Value

Reference Name: R.49.2x4.24

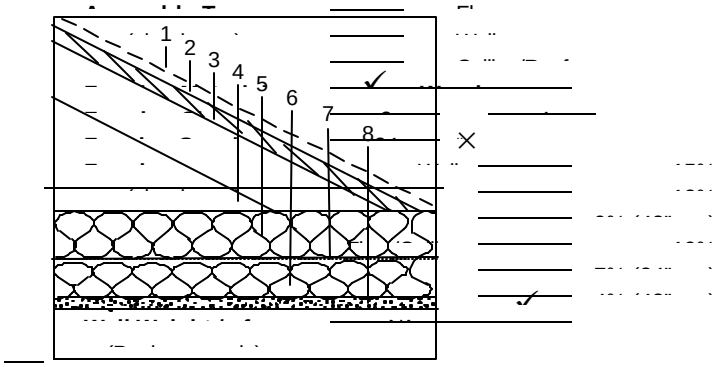

Sketch of Construction Assembly

List of Construction Components	R-Value	
	Cavity (R_c)	Frame (R_f)
	c	f

Framing Adjustment Calculation:

$$\frac{1}{\frac{[(1/52.160)}{1 \div R_c} \times \frac{(1-7/100)]}{1-(Fr.\% \div 100)} + \frac{[(1/44.625)}{1 \div R_f} \times \frac{(7/100)]}{Fr.\% \div 100}} = \boxed{0.019}$$

Total U

$$\frac{1}{1/0.019} = 52.632$$

Total R-Value

Reference Name: R.49.S2x4.24

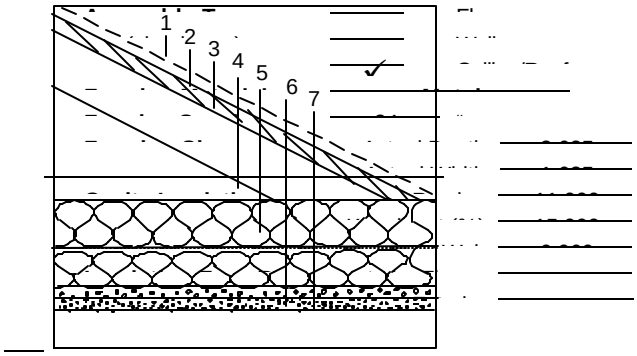

Sketch of Construction Assembly

List of Construction Components	R-Value

~~Calculation:~~

From EZFRAME

1/0.018

Reference Name: FC.0.2x6.16

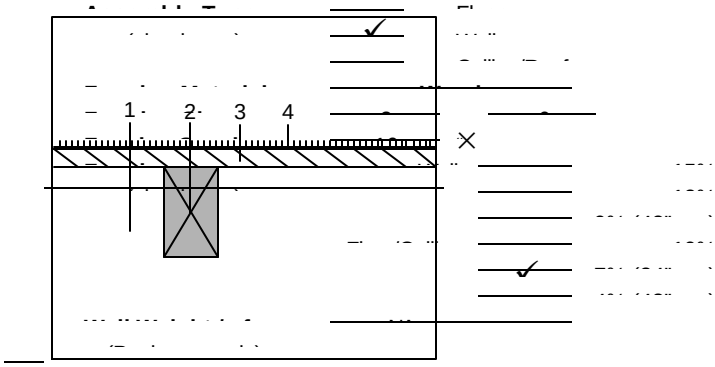

Sketch of Construction Assembly

List of Construction Components	R-Value	
	Cavity (R_c)	Frame (R_f)

Framing Adjustment Calculation:

$$\left[\left(\frac{1}{1 \div R_c}\right) \times \left(\frac{1-10/100}{1-(Fr.\% \div 100)}\right)\right] + \left[\left(\frac{1}{1 \div R_f}\right) \times \left(\frac{10/100}{Fr.\% \div 100}\right)\right] = \frac{1}{1 \div \text{Total U-}} = \frac{1}{0.097} = 10.309$$

0.097

Total R-Value

Reference Name: FC.0.S2x6.16

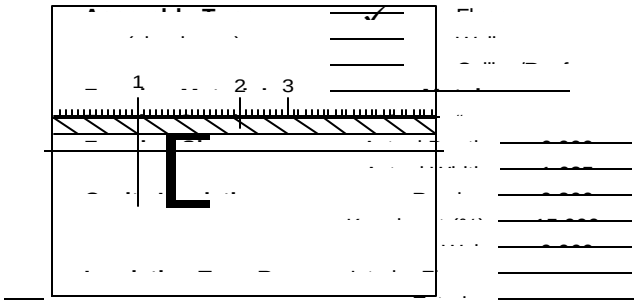

Sketch of Construction Assembly

List of Construction Components	R-Value

~~Calculation:~~

From EZFRAME =

$$\frac{1/0.094}{1 \div \text{Total U-}} =$$

~~Reference Name: FX.0.2x6.16~~

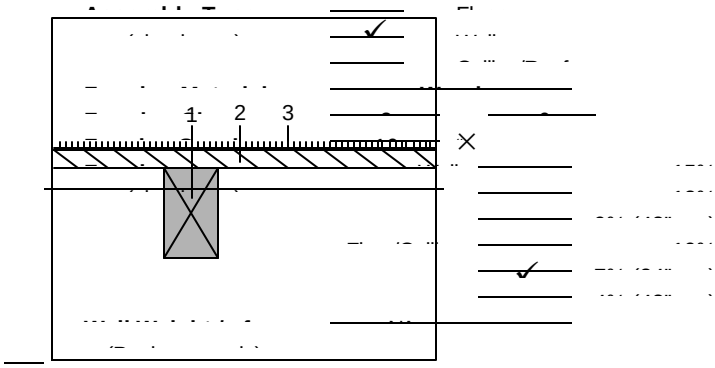

~~Sketch of Construction Assembly~~

~~List of Construction Components~~	~~R-Value~~	
	~~Cavity (R_c)~~	~~Frame (R_f)~~

~~Framing Adjustment Calculation:~~

$$\left[\left(\frac{1}{3.950}\right) \times \left(\frac{1-10/100}{1-(Fr.\% \div 100)}\right)\right] + \left[\left(\frac{1}{9.395}\right) \times \left(\frac{10/100}{Fr.\% \div 100}\right)\right] = \frac{1/0.238}{1 \div \text{Total U-}} = \frac{4.202}{\textbf{Total R-Value}}$$

($1 \div R_c$; $1 \div R_f$)

c	f
0.238	

Total U

~~Reference Name: FX.0.S2x6.16~~

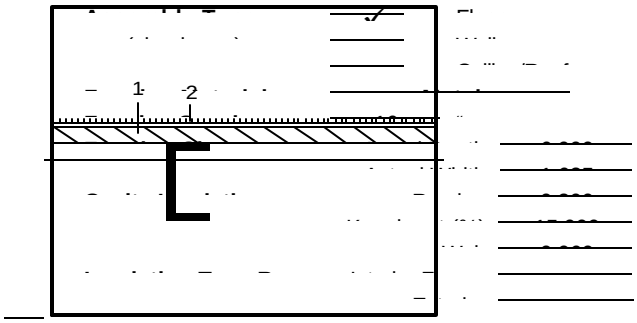

~~Sketch of Construction Assembly~~

~~List of Construction Components~~	~~R-Value~~

~~Calculation:~~

From EZFRAME

$$\frac{1}{1 \div \text{Total U}} = \frac{1}{0.253} =$$

Reference Name: FC.11.2x6.16

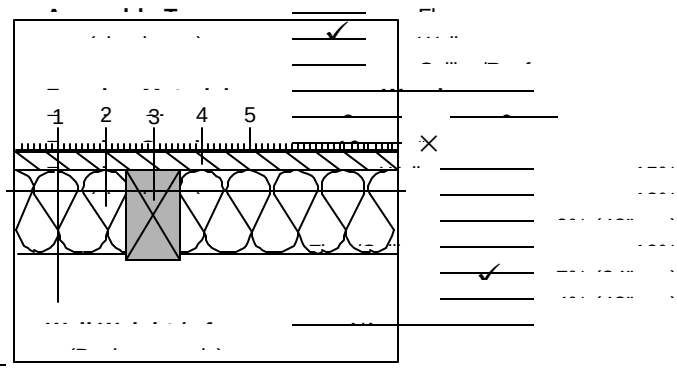

Sketch of Construction Assembly

List of Construction Components	R-Value	
	Cavity (R_c)	Frame (R_f)

Framing Adjustment Calculation:

$$\left[\left(\frac{1}{1+R_c}\right) \times \left(\frac{1-10/100}{1-(Fr.\% \div 100)}\right)\right] + \left[\left(\frac{1}{1+R_f}\right) \times \left(\frac{10/100}{Fr.\% \div 100}\right)\right] = \frac{1}{1+\text{Total U-}} = \frac{1}{0.049} = 20.408$$

0.049

Total R-Value

Reference Name: FC.11.S2x6.16

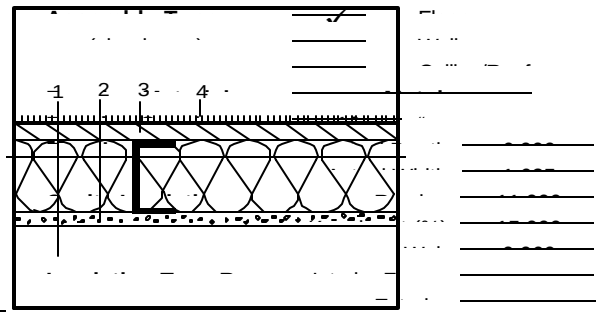

Sketch of Construction Assembly

List of Construction Components	R-Value

~~Calculation:~~

From EZFRAME

$$\frac{1/0.048}{1 \div \text{Total U}} =$$

Reference Name: FX.11.2x6.16

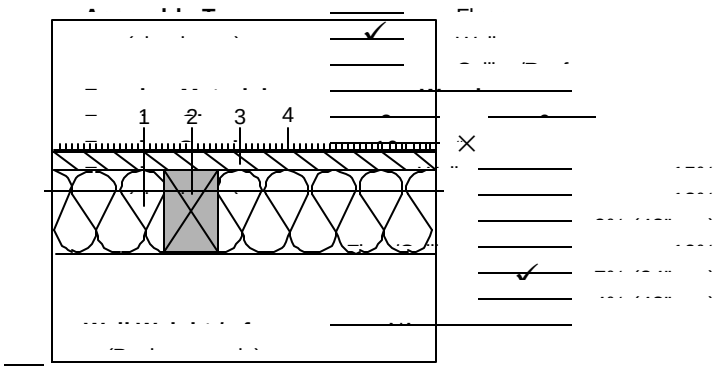

Sketch of Construction Assembly

List of Construction Components	R-Value	
	Cavity (R_c)	Frame (R_f)

Framing Adjustment Calculation:

$$\left[\left(\frac{1}{1+R_c}\right) \times \left(\frac{1}{1-(Fr.\% \div 100)}\right)\right] + \left[\left(\frac{1}{1+R_f}\right) \times \left(\frac{Fr.\% \div 100}{1/0.071}\right)\right] = \frac{14.085}{\text{Total R-Value}}$$

R_c = 0.071, R_f = 0.071

Reference Name: FX.11.S2x6.16

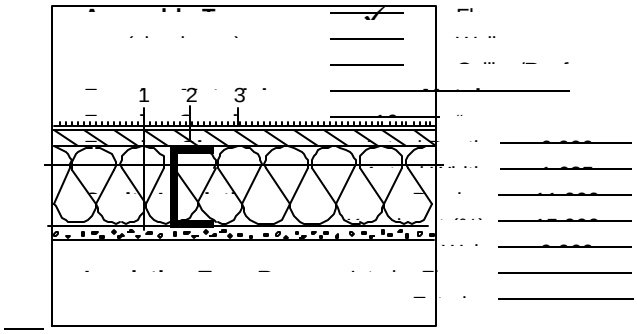

Sketch of Construction Assembly

List of Construction Components	R-Value

~~Calculation:~~

From EZFRAME

$$\frac{1}{1 \div \text{Total U}} = \frac{1}{0.071}$$

~~*Reference Name:* FC.13.2x6.16~~

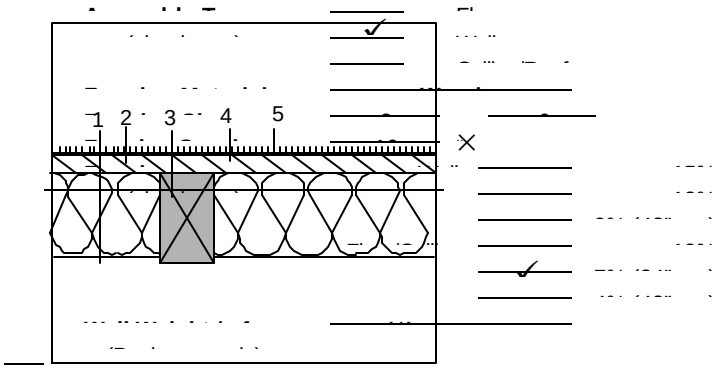

~~Sketch of Construction Assembly~~

~~List of Construction Components~~	~~R-Value~~	
	~~Cavity (R_c)~~	~~Frame (R_f)~~

~~Framing Adjustment Calculation:~~

$$\left[\left(\frac{1}{1 \div R_c}\right) \times \left(\frac{1}{1-(Fr.\% \div 100)}\right)\right] + \left[\left(\frac{1}{1 \div R_f}\right) \times \left(\frac{10}{Fr.\% \div 100}\right)\right] = \frac{1}{1 \div \text{Total U}} = \frac{1}{0.046}$$

0.046

Total U

$$= \frac{1}{0.046} = 21.740$$

Total R-Value

~~*Reference Name:* FC.13.S2x6.16~~

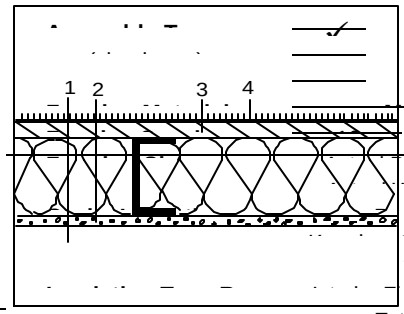

Sketch of Construction Assembly

List of Construction Components	R-Value
	0.043

Calculation:
From EZFRAME

		23.340
1/0.043	=	**Total R-Value**
1/Total U		

Reference Name: FX.13.2x6.16

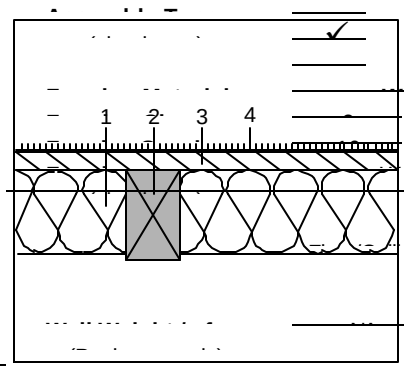

Sketch of Construction Assembly

List of Construction Components	R-Value	
	Cavity (R_c)	Frame (R_f)
	c	f

~~Framing Adjustment Calculation:~~

$$[(\frac{1/16.950}{1 \div R_c}) \times (\frac{1-10/100}{1-(Fr.\% \div 100)})] + [(\frac{1/9.395}{1 \div R_f}) \times (\frac{10/100}{Fr.\% \div 100})] = \boxed{0.064}$$

Total U

$$\frac{1/0.064}{1 \div \text{Total U}} = \frac{15.625}{\textbf{Total R-Value}}$$

~~*Reference Name:* FX.13.S2x6.16~~

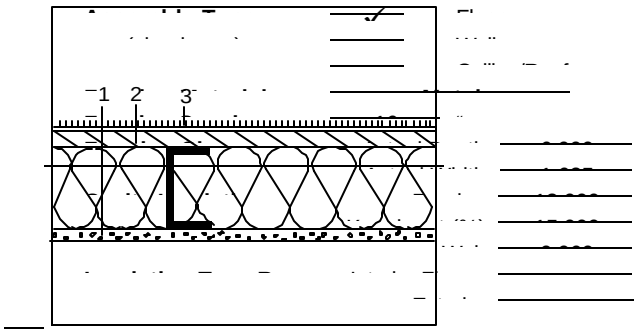

~~Sketch of Construction Assembly~~

~~List of Construction Components~~	~~R-Value~~

0.058

Total U

~~Calculation:~~
From EZFRAME

$$\frac{1/0.058}{1 \div \text{Total U}} = \frac{17.340}{\textbf{Total R-Value}}$$

Reference Name: FC.19.2x8.16

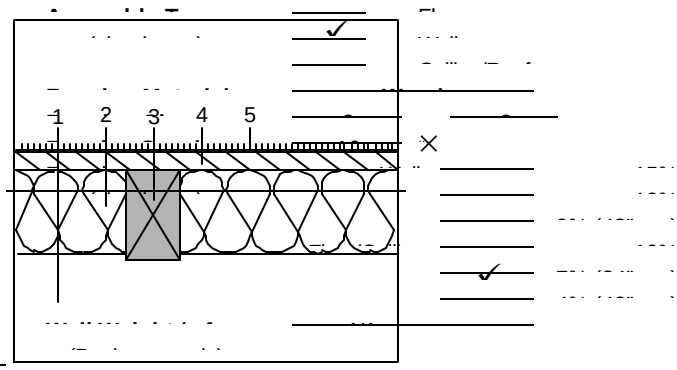

Sketch of Construction Assembly

List of Construction Components	R-Value	
	Cavity (R_c)	Frame (R_f)

Framing Adjustment Calculation:

$$\left[\left(\frac{1}{1+R_c}\right) \times \left(\frac{1-10/100}{1-(Fr.\% \div 100)}\right)\right] + \left[\left(\frac{1}{1+R_f}\right) \times \left(\frac{10/100}{Fr.\% \div 100}\right)\right] = \frac{1}{1+\text{Total U}} = \frac{1}{0.037} = 27.027$$

0.037

Total R-Value

Reference Name: FC.19.S2x8.16

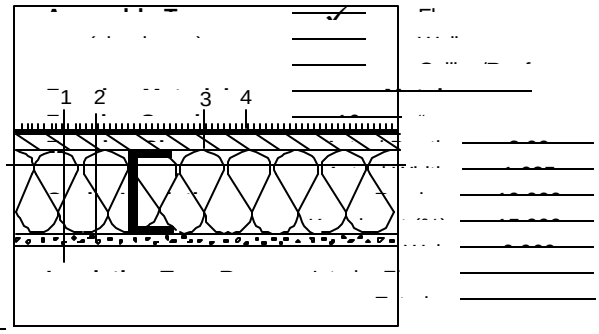

Sketch of Construction Assembly

List of Construction Components	R-Value

Calculation:

From EZFRAME

1/0.035 =

1÷Total U

Reference Name: FX.19.2x8.16

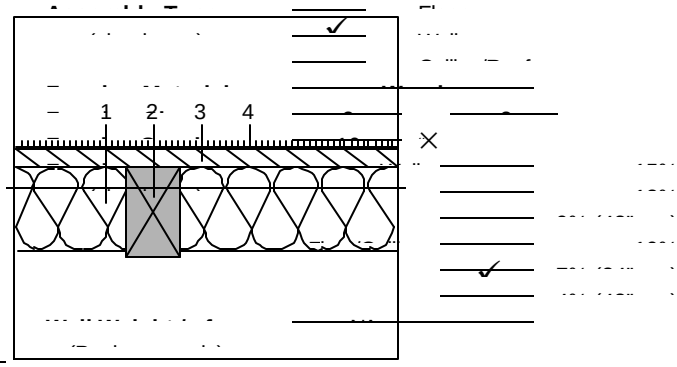

Sketch of Construction Assembly

List of Construction Components	R-Value	
	Cavity (R_c)	Frame (R_f)

Framing Adjustment Calculation:

$$[(\frac{1/22.950}{1 \div R_c}) \times (\frac{1-10/100}{1-(Fr.\% \div 100)})] + [(\frac{1/11.128}{1 \div R_f}) \times (\frac{10/100}{Fr.\% \div 100})] = \frac{1/0.049}{1 \div Total\ U} = \frac{20.408}{\textbf{Total R-Value}}$$

0.049

Reference Name: FX.19.S2x8.16

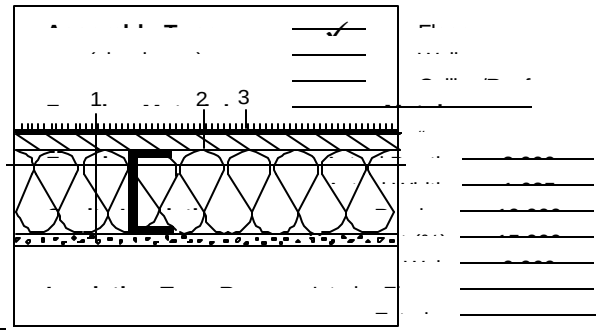

Sketch of Construction Assembly

List of Construction Components	R-Value

~~Framing Adjustment Calculation:~~

[(1/30.950) × (1-10/100)] + [(1/17.128) × (10/100)] =

1÷R c 1-(Fr.% ÷100) 1÷R f Fr.% ÷100

1/0.032 =

1÷Total U

0.032

Total U

31.250

Total R-Value

~~Reference Name: FC.21.S2x8.16~~

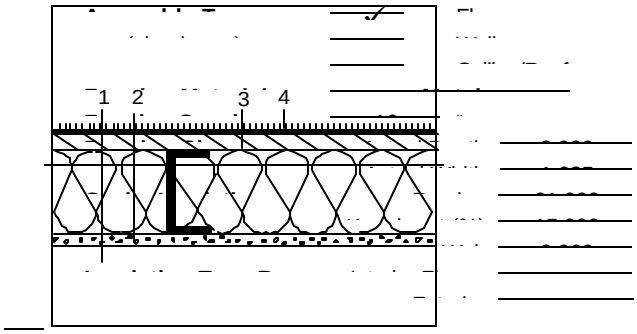

~~Sketch of Construction Assembly~~

~~List of Construction Components~~	~~R-Value~~

0.034

Total U

~~Calculation:~~

From EZFRAME

1/0.034 =

1÷Total U

29.080

Total R-Value

~~Reference Name: FX.21.2x8.16~~

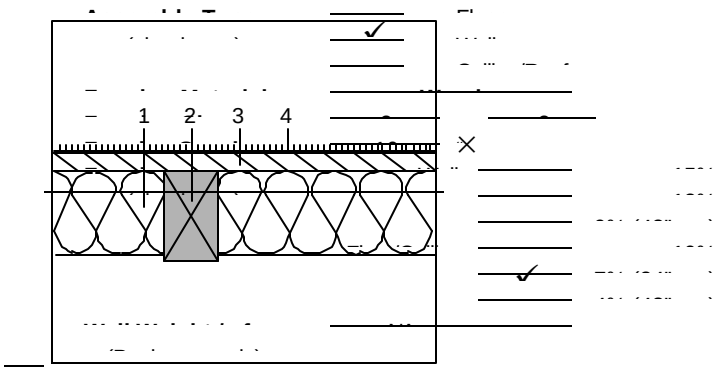

~~Sketch of Construction Assembly~~

~~List of Construction Components~~	~~R-Value~~	
	~~Cavity (R_c)~~	~~Frame (R_f)~~

~~Framing Adjustment Calculation:~~

$$\left[\left(\frac{1}{24.950}\right) \times \left(\frac{1-10/100}{1-(Fr.\% \div 100)}\right)\right] + \left[\left(\frac{1}{11.128}\right) \times \left(\frac{10/100}{Fr.\% \div 100}\right)\right] = \frac{1}{0.045}$$

1÷R c — 1-(Fr.% ÷100) — 1÷R f — Fr.% ÷100 — 1÷Total U

c	f
	0.045

Total U

= 22.222

Total R-Value

~~*Reference Name:* FX.21.S2x8.16~~

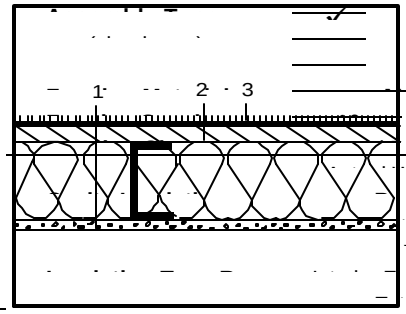

~~Sketch of Construction Assembly~~

~~List of Construction Components~~	~~R-Value~~

~~Calculation:~~

From EZFRAME

$$\frac{1}{0.043}$$

1÷Total U

0.043

Total U

= 23.080

Total R-Value

Reference Name: FC.30.2x10.16

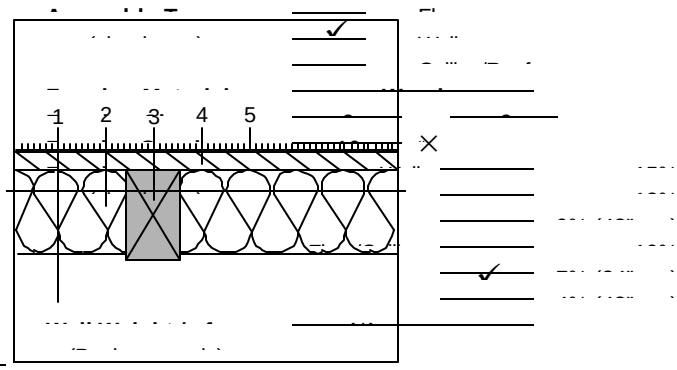

Sketch of Construction Assembly

List of Construction Components	R-Value	
	Cavity (R_c)	Frame (R_f)

Framing Adjustment Calculation:

$$\left[\left(\frac{1}{1+R_c}\right) \times \left(\frac{1}{1-(Fr.\% \div 100)}\right)\right] + \left[\left(\frac{1}{1+R_f}\right) \times \left(\frac{10/100}{Fr.\% \div 100}\right)\right] = \frac{1}{1+\text{Total U-}} = \frac{1}{0.028} = 35.714$$

Total R-Value

Reference Name: FC.30.S2x10.16

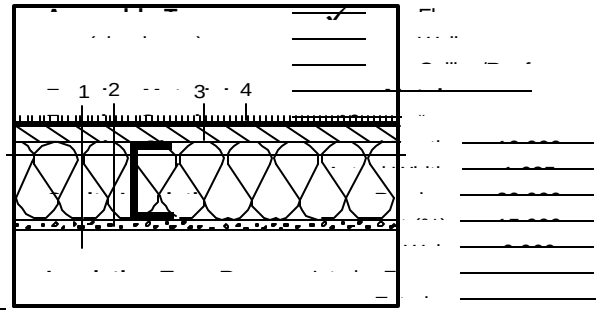

Sketch of Construction Assembly

List of Construction Components	R-Value

~~Calculation:~~

From EZFRAME

1/0.026

1÷Total U-

Reference Name: FX.30.2x10.16

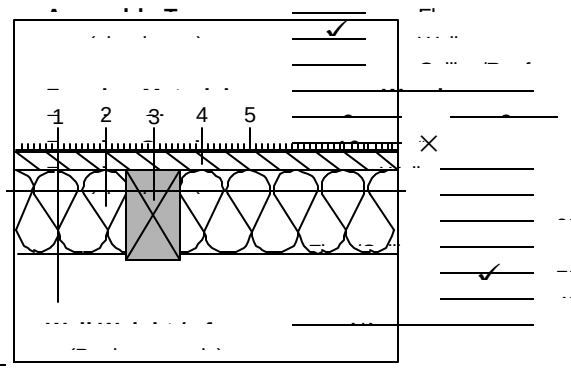

Sketch of Construction Assembly

List of Construction Components	R-Value	
	Cavity (R_c)	Frame (R_f)

Framing Adjustment Calculation:

$$\left[\left(\frac{1}{1+R_c}\right) \times \left(\frac{1}{1-(Fr.\% \div 100)}\right)\right] + \left[\left(\frac{1}{1+R_f}\right) \times \left(\frac{10}{Fr.\% \div 100}\right)\right] = \boxed{0.034}$$

$$= \frac{1}{1+\text{Total U}} = \frac{1}{0.034} = 29.412$$

Total R-Value

Reference Name: FX.30.S2x10.16

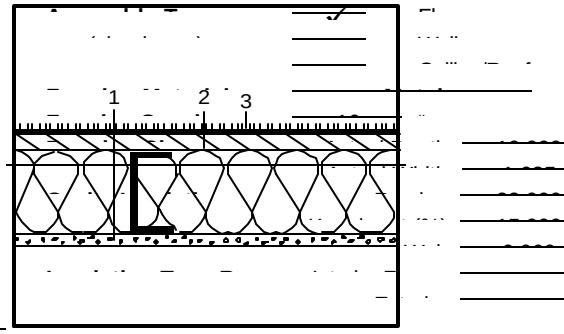

Sketch of Construction Assembly

List of Construction Components	R-Value

~~Calculation:~~

From EZFRAME

~~Computer Modeling of Framed Assemblies~~

1÷Total U-

~~EZFrame~~ ~~can be purchased by ordering the following:~~

~~Publication No.: P400-94-002R~~

~~Cost: $14.00~~

~~Address: California Energy Commission~~

~~Publications, MS-13~~

~~P.O. Box 944295~~

~~Sacramento, CA 94244-2950~~

~~Or Download Free *EZFrame* Computer Modeling of Framed Assemblies Program at the following ftp site:~~

~~ftp://energy.ca.gov/pub/efftech/~~

~~Table B-8A: Fan Motor Efficiencies (< 1 HP)~~

~~Nameplate or Brake Horsepower~~	~~Standard Fan Motor Efficiency~~	~~NEMA* High Efficiency~~	~~Premium Efficiency~~
~~1/20~~	~~40%~~	~~...~~	~~...~~
~~1/12~~	~~49%~~	~~...~~	~~...~~
~~1/8~~	~~55%~~	~~...~~	~~...~~
~~1/6~~	~~60%~~	~~...~~	~~...~~
~~1/4~~	~~64%~~	~~...~~	~~...~~
~~1/3~~	~~66%~~	~~...~~	~~...~~
~~1/2~~	~~70%~~	~~76.0%~~	~~80.0%~~
~~3/4~~	~~72%~~	~~77.0%~~	~~84.0%~~

~~*NOTE: For default drive efficiencies, See Section 4.2.2*~~

~~*NEMA - Proposed standard using test procedures.~~

~~Minimum NEMA efficiency per test IEEE 112b Rating Method.~~

~~TABLE B-8B: Fan Motor Efficiencies (1 HP and over)~~

	~~Open Motors~~				~~Enclosed Motors~~			
~~Number of Poles~~	~~2~~	~~4~~	~~6~~	~~8~~	~~2~~	~~4~~	~~6~~	~~8~~
~~Synchronous Speed~~	~~3600~~	~~1800~~	~~1200~~	~~900~~	~~3600~~	~~1800~~	~~1200~~	~~900~~
~~Motor Horsepower~~								
~~1~~	~~—~~	~~82.5~~	~~80.0~~	~~74.0~~	~~75.5~~	~~82.5~~	~~80.0~~	~~74.0~~
~~1.5~~	~~82.5~~	~~84.0~~	~~84.0~~	~~75.5~~	~~82.5~~	~~84.0~~	~~85.5~~	~~77.0~~
~~2~~	~~84.0~~	~~84.0~~	~~85.5~~	~~85.5~~	~~84.0~~	~~84.0~~	~~86.5~~	~~82.5~~
~~3~~	~~84.0~~	~~86.5~~	~~86.5~~	~~86.5~~	~~85.5~~	~~87.5~~	~~87.5~~	~~84.0~~
~~5~~	~~85.5~~	~~87.5~~	~~87.5~~	~~87.5~~	~~87.5~~	~~87.5~~	~~87.5~~	~~85.5~~
~~7.5~~	~~87.5~~	~~88.5~~	~~88.5~~	~~88.5~~	~~88.5~~	~~89.5~~	~~89.5~~	~~85.5~~
~~10~~	~~88.5~~	~~89.5~~	~~90.2~~	~~89.5~~	~~89.5~~	~~89.5~~	~~89.5~~	~~88.5~~
~~15~~	~~89.5~~	~~91.0~~	~~92.0~~	~~89.5~~	~~90.2~~	~~91.0~~	~~90.2~~	~~88.5~~
~~20~~	~~90.2~~	~~91.0~~	~~91.0~~	~~90.2~~	~~90.2~~	~~91.0~~	~~90.2~~	~~89.5~~
~~25~~	~~91.0~~	~~91.7~~	~~91.7~~	~~90.2~~	~~91.0~~	~~92.4~~	~~91.7~~	~~89.5~~
~~30~~	~~91.0~~	~~92.4~~	~~92.4~~	~~91.0~~	~~91.0~~	~~92.4~~	~~91.7~~	~~91.0~~
~~40~~	~~91.7~~	~~93.0~~	~~93.0~~	~~91.0~~	~~91.7~~	~~93.0~~	~~93.0~~	~~91.0~~
~~50~~	~~92.4~~	~~93.0~~	~~93.0~~	~~91.7~~	~~92.4~~	~~93.0~~	~~93.0~~	~~91.7~~
~~60~~	~~93.0~~	~~93.6~~	~~93.6~~	~~92.4~~	~~93.0~~	~~93.6~~	~~93.6~~	~~91.7~~
~~75~~	~~93.0~~	~~94.1~~	~~93.6~~	~~93.6~~	~~93.0~~	~~94.1~~	~~93.6~~	~~93.0~~
~~100~~	~~93.0~~	~~94.1~~	~~94.1~~	~~93.6~~	~~93.6~~	~~94.5~~	~~94.1~~	~~93.0~~
~~125~~	~~93.6~~	~~94.5~~	~~94.1~~	~~93.6~~	~~94.5~~	~~94.5~~	~~94.1~~	~~93.6~~
~~150~~	~~93.6~~	~~95.0~~	~~94.5~~	~~93.6~~	~~94.5~~	~~95.0~~	~~95.0~~	~~93.6~~
~~200~~	~~94.5~~	~~95.0~~	~~94.5~~	~~93.6~~	~~95.0~~	~~95.0~~	~~95.0~~	~~94.1~~
~~250~~	~~94.5~~	~~95.0~~	~~95.4~~	~~94.5~~	~~95.4~~	~~95.0~~	~~95.0~~	~~94.5~~
~~300~~	~~95.0~~	~~95.4~~	~~95.4~~	~~—~~	~~95.4~~	~~95.4~~	~~95.0~~	~~—~~
~~350~~	~~95.0~~	~~95.4~~	~~95.4~~	~~—~~	~~95.4~~	~~95.4~~	~~95.0~~	~~—~~
~~400~~	~~95.4~~	~~95.4~~	~~—~~	~~—~~	~~95.4~~	~~95.4~~	~~—~~	~~—~~
~~450~~	~~95.8~~	~~95.8~~	~~—~~	~~—~~	~~95.4~~	~~95.4~~	~~—~~	~~—~~
~~500~~	~~95.8~~	~~95.8~~	~~—~~	~~—~~	~~95.4~~	~~95.8~~	~~—~~	~~—~~

~~Table B-910: Illuminance Categories~~

~~NOTE: This table is taken from the *Office Lighting American National Standard Practice*, ANSI/IES RP-1, 1993. The table is produced in its entirely, including captions and footnotes. Permission to reprint is pending.~~

~~TABLE 3: Currently recommended illuminance categories for lighting design --target maintained values (See Table 4 for Illuminance Values). These recommendations provide a guide for efficient visual performance in office spaces rather than for safety alone. For a tabulation of minimum levels of illumination required for safety, see Table 7.~~

	Illuminance Category	Veiling Reflectance
~~Accounting~~		
~~(see individual tasks)~~		
~~Copied Tasks~~		
~~Ditto Copy (6)~~	~~E~~	~~!~~
~~Micro-fiche reader (1)~~	~~B~~	~~!!~~
~~Mimeograph~~	~~D~~	
~~Photographs, mod. detail~~	~~E~~	~~!!~~
~~Thermal copy, poor copy~~	~~F~~	~~!~~
~~Xerography, 3rd generation (6) and greater~~	~~E~~	
~~Xerograph~~	~~D~~	
~~Drafting Tasks~~		
~~Drafting: Mylar~~		
~~High contrast media; India ink, plastic leads, soft graphite leads~~	~~E~~	~~!~~
~~Low contrast media, hard graphite leads~~	~~F~~	~~!~~
~~Vellum: high contrast~~	~~E~~	~~!~~
~~low contrast~~	~~F~~	
~~Tracing paper: high contrast~~	~~E~~	~~!~~
~~low contrast~~	~~F~~	
~~Overlays (2)~~		
~~Light Table~~	~~C~~	

~~Prints: Blue Line~~	~~E~~	
~~Blueprints~~	~~E~~	
~~Sepia prints~~	~~F~~	
	~~Illuminace~~	~~Veiling~~
~~TABLE 3 (continued)~~	~~Category~~	~~Reflectance~~

~~EDP Tasks~~		
~~CRT Screens (1)~~	~~B~~	~~!!~~
~~Impact printer: good ribbon~~	~~D~~	
~~poor ribbon (6)~~	~~E~~	
~~2nd carbon and greater (6)~~	~~E~~	
~~Ink jet printer~~	~~D~~	
~~Keyboard reading~~	~~D~~	
~~Machine rooms: active operations~~	~~D~~	
~~tape storage~~	~~D~~	
~~machine area~~	~~C~~	
~~equipement service (3)~~	~~E~~	
~~Thermal print~~	~~E~~	~~!~~
~~Filing~~		
~~(see individual tasks)~~		
~~General and Public Areas~~		
~~AV areas~~	~~D~~	
~~Conference rooms~~	~~D~~	
~~(critical seeing, refer to individual tasks)~~		
~~Display areas (4)~~	~~C~~	
~~Duplicating and off-set printing area~~	~~D~~	
~~Elevators~~	~~C~~	
~~Escalators~~	~~C~~	
~~First aid areas~~	~~E~~	
~~Food service (7)~~		
~~Hallways~~	~~B~~	
~~Janitorial spaces~~	~~C~~	
~~Libraries (7)~~		
~~Lobbies and lounges~~	~~C~~	
~~Model making~~	~~F~~	
~~Mail sorting~~	~~E~~	

~~Mechanical rooms: operation~~	~~B~~		
~~equipment service (3)~~	~~E~~		
~~Reception area~~	~~C~~		
~~Rest rooms~~	~~C~~		
~~Stairs~~	~~B~~		
~~Utility rooms~~	~~B~~		
~~Graphic Design and Material~~			
~~Color selection (5)~~	~~F~~		
~~Charting and mapping~~	~~F~~		
~~Graphs~~	~~E~~		
~~Keylining~~	~~F~~		
~~Layout and artwork~~	~~F~~		
~~Photographs, mod. detail~~	~~E~~	~~!!~~	
~~Handwritten Tasks~~			
~~#2 pencil and softer leads~~	~~D~~	~~!~~	
~~#3 pencil~~	~~E~~	~~!~~	
~~#4 pencil and harder leads (6)~~	~~F~~	~~!~~	
~~Ball-point pen~~	~~D~~	~~!~~	
~~Felt-tip pen~~	~~D~~		
~~Handwritten carbon copies (6)~~	~~E~~		
~~Non photographically reproducible colors~~	~~F~~		
~~Illuminace~~	~~Veiling~~		

~~TABLE 3 (continued)~~ ~~Category~~ ~~Reflectance~~

~~Printed Tasks~~			
~~6 pt (6) see 2.4~~	~~E~~	~~!~~	
~~8 & 10 pt~~	~~D~~	~~!~~	
~~Glossy magazines~~	~~D~~	~~!!~~	
~~Maps~~	~~E~~		
~~Newsprint~~	~~D~~		
~~Typed Originals~~	~~D~~		
~~Typed 2nd carbon and later (6)~~	~~E~~		
~~Telephone books~~	~~E~~		

~~NOTES:~~

~~1. Veiling reflections may be produced on glass surfaces. It may be necessary to treat plus weighting factors as minus in order to obtain proper light balance.~~

~~2. Degradation factors: Overlays--add 1 weighing factor for each overlay~~

~~Used material--estimate additional factors~~

~~See Table 4~~

~~3. Only when actual equipment service is in progress. May be achieved by a general lighting system or by localized lighting or by portable equipment.~~

~~4. For details on the lighting of display refer to Recommended Practice for Lighting Merchandise Areas. (10)~~

~~5. For color matching, the quality of the color of the light source may be important.~~

~~6. Designing to higher levels to accommodate poor quality tasks should be undertaken only after it is determined that task quality cannot be improved. If a poor quality task cannot be eliminated, its "time-and-importance" factor should be carefully considered before allowing it to govern the illuminance level selection.~~

~~7. See Reference 9.~~

~~! Task subject to veiling reflections. Illuminance listed is not an ESI value. Currently, insufficient experience in the use of ESI target values precludes the direct use of Equivalent Sphere Illumination in the present consensus approach recommend illuminance values. Equivalent Sphere Illumination may be used as a tool in determining the effectiveness of controlling veiling reflections and as part of the evaluation of lighting systems.~~

~~!! Especially subject to veiling reflectances. It may be necessary to shield the task or to reorient it.~~

~~Definition of Merchandising and Associated Service Areas in Stores~~

~~NOTE: This table is taken from the *Recommended Practice for Lighting Merchandising Areas*, IES RP-2. The table is produced in its entirety, including captions and footnotes. Permission to reprint is pending.~~

~~TABLE 1 -- Currently Recommended Illuminance for Lighting Design in Merchandising and Associated Areas -- Target Maintained Levels~~

Areas or Tasks	Description	Type of Activity Area*	Foot-Lux candles

~~Circulation~~	~~Area not used for display or appraisal of merchandise for sales transactions~~	~~High activity~~	~~300~~	~~30~~	
		~~Medium activity~~	~~400~~	~~20~~	
		~~Low activity~~	~~100~~	~~10~~	
~~Merchandise***~~ ~~(including showcases & wall displays)~~	~~That plane area, horizontal to vertical, where merchandise is displayed and readily accessible for customer examination~~	~~High activity~~	~~1000~~	~~100~~	
		~~Medium activity~~	~~750~~	~~75~~	
		~~Low activity~~	~~300~~	~~30~~	
~~Show windows~~					
~~Daytime lighting~~					
~~General~~			~~2000~~	~~200~~	
~~Feature~~			~~10000~~	~~1000~~	
~~Nighttime lighting~~					
~~Main business districts-highly competitive~~					
~~General~~			~~2000~~	~~200~~	
~~Feature~~			~~10000~~	~~1000~~	
~~Secondary business districts or small towns~~					
~~General~~			~~1000~~	~~100~~	
~~Feature~~			~~5000~~	~~500~~	
~~Sales Transactions~~	~~Areas used for employee price verification and for recording transactions~~	~~Reading of copied, written, printed or EDP information~~			~~See Table 2~~
~~Support Services~~	~~Store spaces where merchandising is a prime consideration~~	~~Alteration fitting stock, wrapping and packaging rooms~~			~~See Table 2~~

~~NOTES:~~

~~* One store may encompass all three types within the building: High Activity area -- where merchandise displayed has recognizable usage. Evaluation and viewing time is rapid, and merchandise is sown to attract and stimulate the impulse buying decision; Medium Activity -- where merchandise is familiar in type or usage, but the customer may require time and/or help in evaluation of quality, usage, or for the decision to buy; and Low Activity -- where merchandise is displayed that is purchased less frequently by the customer, who may be unfamiliar with the inherent quality, design, value or usage. Where assistance and time is necessary to reach a buying decision.~~

~~** Maintained on the task or in the area at any time.~~

~~*** Lighting levels to be maintained in the plane of the merchandise.~~

~~Fig. 2-1. Currently Recommended Illuminance Categories and Illuminance Values for Lighting Design -- Targeted Maintenance Levels.~~

~~The tabulation that follows is a consolidated listing of the Society's current illuminance recommendations. This listing is intended to guide the lighting designer in selecting an appropriate illuminance for design and evaluation of lighting systems.~~

~~Guidance is provided in two forms: (1), in Parts I, II and III as an *Illuminance Category*, representing a range of illuminances (see page 2-3 for a method of selecting a value within each illuminance range); and (2), in parts IV, V and VI as an *Illuminance Value*. Illuminance Values are given in *lux* with an approximate equivalence in footcandles and as such are intended as *target* (nominal) values with deviations expected. These target values also represent maintained values (see page 2-23).~~

~~This table has been divided into the six parts for ease of use. Part I provides a listing of both Illuminance Categories and Illuminance Values for generic types of interior activities and normally is to be used when Illuminance Categories for a specific Area/Activity cannot be found in parts II and III. Parts IV, V and VI provide target maintained Illuminance Values for outdoor facilities sports and recreational areas, and transportation vehicles where special considerations apply as discussed on page 2-4.~~

~~In all cases the recommendations in this table are based on the assumption that the lighting will be properly designed to take into account the visual characteristics of the task. See the design information in the particular application sections in this Application Handbook for further recommendations.~~

~~II. Commercial, Institutional, Residential and Public Assembly Interiors~~

Area/Activity	Illuminance Category	Area/Activity	Illuminance Category

~~Accounting (see Reading)~~

~~Air terminals (see Transportation terminals)~~

~~Armories C[1]~~

~~Art galleries (see Museums)~~

~~Auditoriums~~

~~Assembly C[1]~~

~~Social activity B~~

~~Banks~~

~~Lobby~~

~~General C~~

~~Writing area D~~

~~Tellers' stations E[3]~~

~~Barber shops and beauty parlors E~~

~~Churches and synagogues (see page 7-2)[4]~~

~~Club and lodge rooms~~

~~Lounge and reading D~~

~~Conference rooms~~

~~Conferring D~~

~~Critical seeing (refer to individual task)~~

~~Court rooms~~

~~Seating area C~~

~~Court activity area E[3]~~

~~Dance halls and discotheques B~~

~~Depots, terminals and stations~~

~~(see Transportation terminals)~~

~~Drafting~~

~~Mylar~~

~~High contrast media; India ink, plastic leads, soft graphite leads E[3]~~

~~Low contrast media; hard graphite leads F[3]~~

~~Vellum~~

~~High contrast E[3]~~

~~Low contrast F[3]~~

~~Tracing paper~~

~~High contrast E[3]~~

~~Low contrast F[3]~~

~~Overlays[5]~~

~~Light table C~~

~~Prints~~

~~Blue line E~~

~~Blueprints E~~

~~Sepia prints F~~

~~NOTE: This table is taken from the Figure 2-2 of the IES Lighting Handbook 1982 Application Volume. Part II of the table is produced in its entirety, with captions and footnotes. Permission to reprint is pending.~~

~~Fig. 2-1. *Continued*~~

~~II. *Continued*~~

Area/Activity	Illuminance Category	Area/Activity	Illuminance Category

~~Educational facilities~~

~~Classrooms~~

~~General (see Reading)~~

~~Drafting (see Drafting)~~

~~Home economics (see Residences)~~

~~Science laboratories E~~

~~Lecture rooms~~

~~Audience (see Reading)~~

~~Demonstration F~~

~~Music rooms (see Reading)~~

~~Shops (see Part III, Industrial Group)~~

~~Sight saving rooms F~~

~~Study halls (see Reading)~~

~~Typing (see Reading)~~

~~Sports facilities (see Part V, Sports and Recreational Areas)~~

~~Cafeterias (see Food service facilities)~~

~~Dormitories (see Residences)~~

~~Elevator, freight and passenger C~~

~~Exhibition halls C[1]~~

~~Filing (refer to individual task)~~

~~Financial facilities (see Banks)~~

~~Fire halls (see Municipal buildings)~~

~~Food service facilities~~

~~Dining areas~~

~~Cashier D~~

~~Cleaning C~~

~~Dining B[6]~~

~~Food displays (see Merchandising spaces)~~

~~Kitchen E~~

~~Garages -- parking (see page 14-28)~~

~~Gasoline stations (see Service stations)~~

~~Graphic design and material~~

~~Color selection F[11]~~

~~Charting and mapping F~~

~~Graphs E~~

~~Keylining F~~

~~Layout and artwork F~~

~~Photographs, moderate detail E[13]~~

~~Health care facilities~~

~~Ambulance (local) E~~

~~Anesthetizing E~~

~~Autopsy and morgue[17, 18]~~

~~Autopsy, general E~~

~~Autopsy table G~~

~~Morgue, general D~~

~~Museum E~~

Cardiac function lab E

Central sterile supply

Inspection, general E

Inspection F

At sinks E

Work areas, general D

Processed storage D

Corridors[17]

Nursing areas -- day C

Nursing areas -- night B

Operating areas, delivery, recovery,

and laboratory suites and service E

Critical care areas[17]

General C

Examination E

Surgical task lighting H

Hand washing F

Cystoscopy room [17,18]

Dental suite [17]

General D

Instrument tray E

Oral Cavity H

Prosthetic laboratory, general D

Prosthetic laboratory, work bench E

Prosthetic, laboratory, local F

Recovery room, general C

Recovery room, emergency

examination E

Dialysis unit, medical[17] F

Elevators C

EKG and specimen room[17]

General B

On equipment C

Emergency outpatient[17]

General E

Local F

Endoscopy rooms [17, 18]

General E

Peritoneoscopy D

Culdoscopy D

Examination and treatment rooms [17]

General D

Local E

Eye surgery[17, 18] F

Fracture room[17]

General E

Local F

Inhalation therapy D

Laboratories[17]

Specimen collecting E

Tissue laboratories F

Microscopic reading room D

Gross specimen review F

Chemistry rooms E

Fig. 2-1. *Continued*

II. *Continued*

Area/Activity	Illuminance Category	Area/Activity	Illuminance Category

~~Bacteriology rooms~~

~~General E~~

~~Reading culture plates F~~

~~Hematology E~~

~~Linens~~

~~Sorting soiled linen D~~

~~Central (clean) linen room D~~

~~Sewing room, general D~~

~~Sewing room, work area E~~

~~Linen closet B~~

~~Lobby C~~

~~Locker rooms C~~

~~Medical illustration studio[17, 18] F~~

~~Medical records E~~

~~Nurseries[17]~~

~~General[18] C~~

~~Observation and treatment E~~

~~Nursing stations[17]~~

~~General D~~

~~Desk E~~

~~Corridors, day C~~

~~Corridors, night A~~

~~Medication station E~~

~~Obstetric delivery suite[17]~~

~~Labor rooms~~

~~General C~~

~~Local E~~

~~Birthing room F~~

~~Delivery area~~

~~Scrub, general F~~

~~General G~~

~~Delivery table (see page 7-19)~~

~~Resuscitation G~~

~~Post delivery recovery area E~~

~~Substerilizing room B~~

~~Occupational therapy[17]~~

~~Work area, general D~~

~~Work tables or benches E~~

~~Patients' rooms[17]~~

~~General[18] B~~

~~Observation A~~

~~Critical examination E~~

~~Reading D~~

~~Toilets D~~

~~Pharmacy[17]~~

~~General E~~

~~Alcohol vault D~~

~~Laminar flow bench F~~

~~Night light A~~

~~Parenteral solution room D~~

~~Physical therapy departments~~

~~Gymnasiums D~~

~~Tank rooms D~~

~~Treatment cubicles D~~

~~Postanesthetic recovery room[17]~~

~~General[18] E~~

~~Local H~~

~~Pulmonary function laboratories[17] E~~

~~Radiological suite[17]~~

~~Diagnostic section~~

~~General[18] A~~

~~Waiting area A~~

~~Radiographic/fluoroscopic room A~~

~~Film sorting F~~

~~Barium kitchen E~~

~~Radiation therapy section~~

~~General[18] B~~

~~Waiting area B~~

~~Isotope kitchen, general E~~

~~Isotope kitchen, benches E~~

~~Computerized radiotomography section~~

~~Scanning room B~~

~~Equipment maintenance room E~~

~~Solarium~~

~~General C~~

~~Local for reading D~~

~~Stairways C~~

~~Surgical suite[17]~~

~~Operating room, general[18] F~~

~~Operating table (see page 7-15)~~

~~Scrub room F~~

~~Instruments and sterile supply room D~~

~~Clean up room, instruments E~~

~~Anesthesia C~~

~~Substerilizing room C~~

~~Surgical induction room[17, 18] E~~

~~Surgical holding area[17, 18] E~~

~~Toilets C~~

~~Utility room D~~

~~Waiting areas[17]~~

~~General C~~

~~Local for reading D~~

~~Homes (see Residences)~~

~~Hospitality facilities~~

~~(see Hotels, food service facilities)~~

~~Hospitals (see Health care facilities)~~

~~Hotels~~

~~Bathrooms, for grooming D~~

~~Bedrooms, for reading D~~

~~Corridors, elevators and stairs C~~

~~Front desk E[3]~~

~~Linen room~~

~~Sewing F~~

~~General C~~

~~Lobby~~

~~General lighting C~~

~~Reading and working areas D~~

~~Canopy (see Part IV, Outdoor Facilities)~~

~~Houses of worship (see page 7-5)~~

~~Kitchens (see Food service facilities or Residences)~~

~~Libraries~~

~~Reading areas (see Reading)~~

~~Fig. 2-1. *Continued*~~

~~II. *Continued*~~

~~Area/Activity~~	~~Illuminance Category~~
~~Book stacks [vertical 760 millimeters (30 inches) above floor]~~	
~~Active stacks~~	~~D~~
~~Inactive stacks~~	~~B~~
~~Book repair and binding~~	~~D~~
~~Cataloging~~	~~D[3]~~
~~Card files~~	~~E~~
~~Carrels, individual study areas (see Reading)~~	
~~Circulation desks~~	~~D~~
~~Map, picture and print rooms (see Graphic design and material)~~	
~~Audiovisual areas~~	~~D~~
~~Audio listening areas~~	~~D~~
~~Microform areas (see Reading)~~	
~~Locker rooms~~	~~C~~
~~Merchandising spaces~~	
~~Alteration room~~	~~F~~
~~Fitting room~~	
~~Dressing areas~~	~~D~~
~~Fitting areas~~	~~F~~
~~Locker rooms~~	~~C~~
~~Stock rooms, wrapping and packaging~~	~~D~~
~~Sales transaction area (see Reading)~~	
~~Circulating~~	~~(see page 8-7)[8]~~
~~Merchandise~~	~~(see page 8-7)[8]~~
~~Feature display~~	~~(see page 8-7)[8]~~
~~Show windows~~	~~(see page 8-7)[8]~~
~~Motels (see Hotels)~~	
~~Municipal buildings -- fire and police~~	
~~Police~~	
~~Identification records~~	~~F~~
~~Jail cells and interrogation rooms~~	~~D~~
~~Fire hall~~	~~D~~
~~Museums~~	
~~Displays of non-sensitive materials~~	~~D~~
~~Displays of sensitive materials~~	~~(see page 7-34)[2]~~
~~Lobbies, general gallery areas, corridors~~	~~C~~
~~Restoration or conservation shops and laboratories~~	~~E~~
~~Nursing homes (see Health care facilities)~~	
~~Offices~~	
~~Accounting (see Reading)~~	
~~Audio-visual areas~~	~~D~~
~~Conference areas (see Conference rooms)~~	
~~Drafting (see Drafting)~~	
~~General and private offices (see Reading)~~	
~~Libraries (see Libraries)~~	
~~Lobbies, lounges and reception areas~~	~~C~~
~~Mail sorting~~	~~E~~
~~Off-set printing and duplicating area~~	~~D~~
~~Spaces with VDTs (see page 5-13)~~	

~~Parking facilities (see page 14-28)~~

~~Post offices (see Offices)~~

~~Reading~~

~~Copied tasks~~

~~Ditto copy E[3]~~

~~Micro-fiche reader B[12, 13]~~

~~Mimeograph D~~

~~Photograph, moderate detail E[13]~~

~~Thermal copy, poor copy F[3]~~

~~Xerography D~~

~~Xerography, 3rd generation and greater E~~

~~Electronic data processing tasks~~

~~CRT screens B[12, 13]~~

~~Impact printer~~

~~good ribbon D~~

~~poor ribbon E~~

~~2nd carbon and greater E~~

~~Ink jet printer D~~

~~Keyboard reading D~~

~~Machine rooms~~

~~Active operations D~~

~~Tape storage D~~

~~Machine area C~~

~~Equipment service E[10]~~

~~Thermal print E~~

~~Handwritten tasks~~

~~#2 pencil and softer leads D[3]~~

~~#3 pencil E[3]~~

~~#4 pencil and harder leads F[3]~~

~~Ball-point pen D[3]~~

~~Felt-tip pen D~~

~~Handwritten carbon copies E~~

~~Non photographically reproducible colors F~~

~~Chalkboards E[3]~~

~~Printed tasks~~

~~6 point type E[3]~~

~~8 and 10 point type D[3]~~

~~Glossy magazines D[13]~~

~~Maps E~~

~~Newsprint D~~

~~Typed originals D~~

~~Typed 2nd carbon and later E~~

~~Telephone books E~~

~~Residences~~

~~General lighting~~

~~Conversation, relaxation and entertainment B~~

~~Passage areas B~~

~~Specific visual tasks[20]~~

~~Dining C~~

~~Grooming~~

~~Makeup and shaving D~~

~~Full-length mirror D~~

Fig. 2-1. *Continued*

II. *Continued*

Area/Activity	Illuminance Category
Handcrafts and hobbies	
Workbench hobbies	
Ordinary tasks	D
Difficult tasks	E
Critical tasks	F
Easel hobbies	E
Ironing	D
Kitchen duties	
Kitchen counter	
Critical seeing	E
Noncritical	D
Kitchen range	
Difficult seeing	E
Noncritical	D
Kitchen sink	
Difficult seeing	E
Noncritical	D
Laundry	
Preparation and tubs	D
Washer and dryer	D
Music study (piano or organ)	
Simple scores	D
Advanced scores	E
Substandard size scores	F
Reading	
In a chair	
Books, magazines and newspapers	D
Handwriting, reproductions and poor copies	E
In bed	
Normal	D
Prolonged serious or critical	E
Desk	
Primary task plane, casual	D
Primary task plane, study	E
Sewing	
Hand sewing	
Dark fabrics, low contrast	F
Light to medium fabrics	E
Occasional, high contrast	D
Machine sewing	
Dark fabrics, low contrast	F
Light to medium fabrics	E
Occasional, high contrast	D
Table games	D
Restaurants (see Food service facilities)	
Safety (see page 2-45)	
Schools (see Educational facilities)	
Service spaces (see also Storage rooms)	
Stairways, corridors	C
Elevators, freight and passenger	C
Toilet and washroom	C
Service stations	

~~Service bays (see Part III, Industrial Group)~~

~~Sales room (see Merchandising spaces)~~

~~Show windows (see page 8-7)~~

~~Stairways (see Service spaces)~~

~~Storage rooms (see Part III, Industrial Group)~~

~~Stores (see Merchandising spaces and Show windows)~~

~~Television (see Section 11)~~

~~Theater and motion picture houses (see Section 11)~~

~~Toilets and washrooms C~~

~~Transportation terminals~~

~~Waiting room and lounge C~~

~~Ticket counters E~~

~~Baggage checking D~~

~~Rest rooms C~~

~~Concourse B~~

~~Boarding area C~~

[1]~~Include provisions for higher levels for exhibitions.~~

[2]~~Specific limits are provided to minimize deterioration effects.~~

[3]~~Task subject to veiling reflections. Illuminance listed is not an Equivalent Sphere Illumination (ESI) value. Currently, insufficient experience in the use of ESI target values precludes the direct use of ESI in the present consensus approach to recommend illuminance values. ESI may be used as a tool in determining the effectiveness of controlling veiling reflections and as a part of the evaluation of lighting systems.~~

[4]~~Illuminance values are listed based on experience and consensus. Values relate to needs during various religious ceremonies.~~

[5]~~Degradation factors: Overlays -- add 2 weighting factor for each overlay; Used material -- estimate additional factors.~~

[6]~~Provide higher level over food service or selection areas.~~

[7]~~Supplementary illumination as in delivery room must be available.~~

~~8Illuminance values developed for various degrees of store area activity.~~

[9]~~Or not less than 1/5 the level in the adjacent areas.~~

[10]~~Only when actual equipment service is in process. May be achieved by a general lighting system or by localized or portable equipment.~~

[11]~~For color matching, the spectral quality of the color of the light source is important.~~

[12]~~Veiling reflections may be produced on glass surfaces. It may be necessary to treat plus weighting factors as minus in order to obtain proper illuminance.~~

[13]~~Especially subject to veiling reflections. It may be necessary to shield the task or to reorient it.~~

[14]~~Vertical~~

[15]~~Illuminance values may vary widely, depending upon the effect desired, the decorative scheme, and the use made of the room.~~

[16]~~Supplementary lighting should be provided in this space to produce the higher levels required for specific seeing tasks involved.~~

[17]~~Good to high color rendering capability should be considered in these areas. As lamps of higher luminous efficacy and higher color rendering capability become available and economically feasible, they should be applied in all areas of health care facilities.~~

[18]~~Variable (dimming or switching).~~

[19]~~Values based on a 25 percent reflectance, which is average for vegetation and typical outdoor surfaces. These figures must be adjusted to specific reflectances of materials lighted for equivalent brightness. Levels give satisfactory brightness patterns when viewed from dimly lighted terraces or interiors. When viewed from dark areas they may be reduced by at least 1/2; or they may be doubled when a high key is desired.~~

[20]~~General lighting should not be less than 1/3 of visual task illuminance nor less than 200 lux [20 footcandles].~~

[21]~~Industry representatives have established a table of single illuminance values which, in their opinion, can be used in preference to employing reference 6. Illuminance values for specific operations can also be determined using illuminance categories of similar tasks and activities found in this table and the application of the appropriate weighting factors in Fig. 2-3.~~

[22]~~Special lighting such that (1) the luminous area is large enough to cover the surface, which is being inspected and (2) the luminance is within the limits necessary to obtain comfortable contrast~~

~~conditions. This involves the use of sources of large area and relatively low luminance in which the source luminance is the principal factor rather than the illuminance produced at a given point.~~

~~[23]Maximum levels -- controlled system.~~

~~[24]Additional lighting needs to be provided for maintenance only.~~

~~[25]Color temperature of the light source is important for color matching.~~

~~[26] Select upper level for high speed conveyor systems. For grading redwood lumber 3000 lux [300 footcandles] is required.~~

~~[27]Higher levels from local lighting may be required for manually operated cutting machines.~~

~~[28]If color matching is critical, use illuminance category G.~~

~~LUMINAIRE POWER~~ ~~Table B-101~~

~~Lamp~~		~~Ballast~~			~~Watts/~~	
~~No.~~	~~Designation~~	~~No.~~	~~Abbreviation~~	~~Description~~	~~Luminaire~~	~~Comments~~
[redacted]						
~~Fluorescent Circline, Rapid Start (22 W)~~						
~~1~~	~~FC8T9~~	~~1~~	~~MAG STD~~	~~Magnetic Standard~~	~~27~~	~~8" OD~~
~~Fluorescent Circline, Rapid Start (32 W)~~						
~~1~~	~~FC12T9~~	~~1~~	~~MAG STD~~	~~Magnetic Standard~~	~~45~~	~~12" OD~~
~~Fluorescent Circline, Rapid Start (40 W)~~						
~~1~~	~~FC16T9~~	~~1~~	~~MAG STD~~	~~Magnetic Standard~~	~~57~~	~~16" OD~~
[redacted]						
~~Compact Fluorescent 2D (10W, GR10q-4 Four Pin Base)~~						
~~1~~	~~CFS10W/GR10q~~	~~1~~	~~MAG STD~~	~~Magnetic Standard~~	~~16~~	~~3.6" across~~
~~1~~	~~CFS10W/GR10q~~	~~1~~	~~ELECT~~	~~Electronic~~	~~13~~	
~~2~~	~~CFS10W/GR10q~~	~~1~~	~~ELECT~~	~~Electronic~~	~~26~~	
~~Compact Fluorescent 2D (16W, GR10q-4 Four Pin Base)~~						
~~1~~	~~CFS16W/GR10q~~	~~1~~	~~MAG STD~~	~~Magnetic Standard~~	~~23~~	~~5.5" across~~
~~1~~	~~CFS16W/GR10q~~	~~1~~	~~ELECT~~	~~Electronic~~	~~15~~	
~~2~~	~~CFS16W/GR10q~~	~~1~~	~~ELECT~~	~~Electronic~~	~~30~~	
~~Compact Fluorescent 2D (21W, GR10q-4 Four Pin Base)~~						
~~1~~	~~CFS21W/GR10q~~	~~1~~	~~MAG STD~~	~~Magnetic Standard~~	~~31~~	~~5.5" across~~
~~1~~	~~CFS21W/GR10q~~	~~1~~	~~ELECT~~	~~Electronic~~	~~21~~	
~~2~~	~~CFS21W/GR10q~~	~~1~~	~~ELECT~~	~~Electronic~~	~~42~~	
~~Compact Fluorescent 2D (28W, GR10q-4 Four Pin Base)~~						
~~1~~	~~CFS28W/GR10q~~	~~1~~	~~MAG STD~~	~~Magnetic Standard~~	~~38~~	~~8.1" across~~

~~1~~	~~CFS28W/GR10q~~	~~1~~	~~ELECT~~	~~Electronic~~	~~28~~	
~~2~~	~~CFS28W/GR10q~~	~~1~~	~~ELECT~~	~~Electronic~~	~~56~~	
~~Compact Fluorescent 2D (38W, GR10q-4 Four Pin Base)~~						
~~1~~	~~CFS38W/GR10q~~	~~1~~	~~ELECT~~	~~Electronic~~	~~37~~	~~8.1" across~~
~~2~~	~~CFS38W/GR10q~~	~~1~~	~~ELECT~~	~~Electronic~~	~~74~~	
[redacted]						
~~Compact Fluorescent Twin (5 W, G23 Two Pin Base - F5TT Lamp)~~						
~~1~~	~~CFT5W/G23~~	~~1~~	~~MAG STD~~	~~Magnetic Standard~~	~~9~~	~~4.1" MOL~~
~~2~~	~~CFT5W/G23~~	~~2~~	~~MAG STD~~	~~Magnetic Standard~~	~~18~~	
~~Compact Fluorescent Twin (7 W, G23 Two Pin Base - F7TT Lamp)~~						
~~1~~	~~CFT7W/G23~~	~~1~~	~~MAG STD~~	~~Magnetic Standard~~	~~11~~	~~5.3" MOL~~
~~2~~	~~CFT7W/G23~~	~~2~~	~~MAG STD~~	~~Magnetic Standard~~	~~22~~	

~~LUMINAIRE POWER~~ ~~Table B-101~~

~~Lamp~~		~~Ballast~~			~~Watts/~~	
~~No.~~	~~Designation~~	~~No.~~	~~Abbreviation~~	~~Description~~	~~Luminaire~~	~~Comments~~
[redacted]						
~~Compact Fluorescent Twin (9 W, G23 Two Pin Base - F9TT Lamp)~~						
~~1~~	~~CFT9W/G23~~	~~1~~	~~MAG STD~~	~~Magnetic Standard~~	~~13~~	~~6.5" MOL~~
~~2~~	~~CFT9W/G23~~	~~2~~	~~MAG STD~~	~~Magnetic Standard~~	~~26~~	
~~Compact Fluorescent Twin (13 W, GX23 Two Pin Base - F13TT)~~						
~~1~~	~~CFT13W/GX23~~	~~1~~	~~MAG STD~~	~~Magnetic Standard~~	~~17~~	~~7.5" MOL~~
~~2~~	~~CFT13W/GX23~~	~~2~~	~~MAG STD~~	~~Magnetic Standard~~	~~34~~	
[redacted]						
~~Compact Fluorescent Quad (9 W, G23-2 Two Pin Base - F9DTT Lamp)~~						
~~1~~	~~CFQ9W/G23-2~~	~~1~~	~~MAG STD 120~~	~~120 V Magnetic Standard~~	~~13~~	~~4.4" MOL~~
~~2~~	~~CFQ9W/G23-2~~	~~2~~	~~MAG STD 120~~	~~120 V Magnetic Standard~~	~~26~~	
~~Compact Fluorescent Quad (13 W, G24d-1 Two Pin Base - F13DTT Lamp)~~						
~~1~~	~~CFQ13W/G24d-1~~	~~1~~	~~MAG STD 120~~	~~120 V Magnetic Standard~~	~~18~~	~~6.0" MOL~~
~~2~~	~~CFQ13W/G24d-1~~	~~2~~	~~MAG STD 120~~	~~120 V Magnetic Standard~~	~~36~~	
~~1~~	~~CFQ13W/G24d-1~~	~~1~~	~~MAG STD 277~~	~~227 V Magnetic Standard~~	~~16~~	
~~2~~	~~CFQ13W/G24d-1~~	~~2~~	~~MAG STD 277~~	~~227 V Magnetic Standard~~	~~32~~	

~~Compact Fluorescent Quad (13 W, GX23-2 Two Pin Base)~~						
~~1~~	~~CFQ13W/GX23-2~~	~~1~~	~~MAG STD~~	~~Magnetic Standard~~	~~17~~	~~4.8" MOL~~
~~2~~	~~CFQ13W/GX23-2~~	~~2~~	~~MAG STD~~	~~Magnetic Standard~~	~~34~~	
~~Compact Fluorescent Quad (16W GX32d-1 Two Pin Base)~~						
~~1~~	~~CFQ16W/GX32d-1~~	~~1~~	~~MAG STD~~	~~Magnetic Standard~~	~~20~~	~~5.5" MOL~~
~~2~~	~~CFQ16W/GX32d-1~~	~~2~~	~~MAG STD~~	~~Magnetic Standard~~	~~40~~	
~~Compact Fluorescent Quad (18 W, G24d-2 Two Pin Base - F18DTT Lamp)~~						
~~1~~	~~CFQ18W/G24d-2~~	~~1~~	~~MAG STD 120~~	~~120 V Magnetic Standard~~	~~25~~	~~6.8" MOL~~
~~2~~	~~CFQ18W/G24d-2~~	~~2~~	~~MAG STD 120~~	~~120 V Magnetic Standard~~	~~50~~	
~~1~~	~~CFQ18W/G24d-2~~	~~1~~	~~MAG STD 277~~	~~227 V Magnetic Standard~~	~~22~~	
~~2~~	~~CFQ18W/G24d-2~~	~~2~~	~~MAG STD 277~~	~~227 V Magnetic Standard~~	~~44~~	
~~Compact Fluorescent Quad (22W, GX32d Two Pin Base)~~						
~~1~~	~~CFQ22W/GX32d-2~~	~~1~~	~~MAG STD~~	~~Magnetic Standard~~	~~27~~	~~6.0" MOL~~
~~2~~	~~CFQ22W/GX32d-2~~	~~2~~	~~MAG STD~~	~~Magnetic Standard~~	~~54~~	
~~Compact Fluorescent Quad (26 W, G24d-3 Two Pin Base - F26DTT Lamp)~~						
~~1~~	~~CFQ26W/G24d-3~~	~~1~~	~~MAG STD 120~~	~~120 V Magnetic Standard~~	~~37~~	~~7.6" MOL~~
~~2~~	~~CFQ26W/G24d-3~~	~~2~~	~~MAG STD 120~~	~~120 V Magnetic Standard~~	~~74~~	
~~1~~	~~CFQ26W/G24d-3~~	~~1~~	~~MAG STD 277~~	~~227 V Magnetic Standard~~	~~33~~	
~~2~~	~~CFQ26W/G24d-3~~	~~2~~	~~MAG STD 277~~	~~227 V Magnetic Standard~~	~~66~~	
~~1~~	~~CFQ26W/G24d-3~~	~~1~~	~~ELECT 277V~~	~~277 V Electronic~~	~~27~~	
~~2~~	~~CFQ26W/G24d-3~~	~~2~~	~~ELECT 277V~~	~~277 V Electronic~~	~~54~~	

~~LUMINAIRE POWER~~ ~~Table B-101~~

~~Lamp~~		~~Ballast~~			~~Watts/ Luminaire~~	
~~No.~~	~~Designation~~	~~No.~~	~~Abbreviation~~	~~Description~~		~~Comments~~
[redacted]						
~~Compact Fluorescent Quad (28W GX32d Two Pin Base)~~						
~~1~~	~~CFQ28W/GX32d-3~~	~~1~~	~~MAG STD~~	~~Magnetic Standard~~	~~34~~	~~6.8" MOL~~
~~2~~	~~CFQ28W/GX32d-3~~	~~2~~	~~MAG STD~~	~~Magnetic Standard~~	~~68~~	
[redacted]						
~~Compact Fluorescent Quad (10 W, G24q-1 Four Pin Base)~~						
~~1~~	~~CFQ10W/G24q-1~~	~~1~~	~~MAG STD 120~~	~~120 V Magnetic Standard~~	~~16~~	~~4.6" MOL~~
~~2~~	~~CFQ10W/G24q-1~~	~~2~~	~~MAG STD 120~~	~~120 V Magnetic Standard~~	~~32~~	

~~1~~	~~CFQ10W/G24q-1~~	~~1~~	~~MAG STD 277~~	~~227 V Magnetic Standard~~	~~13~~	
~~2~~	~~CFQ10W/G24q-1~~	~~2~~	~~MAG STD 277~~	~~227 V Magnetic Standard~~	~~26~~	
~~Compact Fluorescent Quad (13 W, G24q-1 Four Pin Base)~~						
~~1~~	~~CFQ13W/G24q-1~~	~~1~~	~~MAG STD 120~~	~~120 V Magnetic Standard~~	~~18~~	~~6.0" MOL~~
~~2~~	~~CFQ13W/G24q-1~~	~~2~~	~~MAG STD 120~~	~~120 V Magnetic Standard~~	~~36~~	
~~1~~	~~CFQ13W/G24q-1~~	~~1~~	~~MAG STD 277~~	~~227 V Magnetic Standard~~	~~16~~	
~~2~~	~~CFQ13W/G24q-1~~	~~2~~	~~MAG STD 277~~	~~227 V Magnetic Standard~~	~~32~~	
~~Compact Fluorescent Quad (13 W, GX7 Four Pin Base)~~						
~~1~~	~~CFQ13W/GX7~~	~~1~~	~~MAG STD~~	~~Magnetic Standard~~	~~17~~	~~4.8" MOL~~
~~2~~	~~CFQ13W/GX7~~	~~2~~	~~MAG STD~~	~~Magnetic Standard~~	~~34~~	
~~Compact Fluorescent Quad (18 W, G24q-2 Four Pin Base)~~						
~~1~~	~~CFQ18W/G24q-2~~	~~1~~	~~MAG STD 120~~	~~120 V Magnetic Standard~~	~~25~~	~~6.8" MOL~~
~~2~~	~~CFQ18W/G24q-2~~	~~2~~	~~MAG STD 120~~	~~120 V Magnetic Standard~~	~~50~~	
~~1~~	~~CFQ18W/G24q-2~~	~~1~~	~~MAG STD 277~~	~~227 V Magnetic Standard~~	~~22~~	
~~2~~	~~CFQ18W/G24q-2~~	~~2~~	~~MAG STD 277~~	~~227 V Magnetic Standard~~	~~44~~	
~~Compact Fluorescent Triple (13 W, GX24q-1 Four Pin Base)~~						
~~1~~	~~CFM 13W/GX24q-1~~	~~1~~	~~MAG STD~~	~~Magnetic Standard~~	~~18~~	~~4.2" MOL~~
~~2~~	~~CFM 13W/GX24q-1~~	~~2~~	~~MAG STD~~	~~Magnetic Standard~~	~~36~~	
~~Compact Fluorescent Triple (18W, GX24q-2 Four Pin Base)~~						
~~1~~	~~CFM 18W/GX24q-2~~	~~1~~	~~MAG STD~~	~~Magnetic Standard~~	~~25~~	~~5.0" MOL~~
~~2~~	~~CFM 18W/GX24q-2~~	~~2~~	~~MAG STD~~	~~Magnetic Standard~~	~~50~~	
~~Compact Fluorescent Triple (26W, GX24q-3 Four Pin Base)~~						
~~1~~	~~CFM 26W/GX24q-3~~	~~1~~	~~MAG STD~~	~~Magnetic Standard~~	~~37~~	~~4.9 to 5.4" MOL~~
~~2~~	~~CFM 26W/GX24q-3~~	~~2~~	~~MAG STD~~	~~Magnetic Standard~~	~~74~~	

~~LUMINAIRE POWER~~ ~~Table B-101~~

~~Lamp~~		~~Ballast~~			~~Watts/ Luminaire~~	~~Comments~~
~~No.~~	~~Designation~~	~~No.~~	~~Abbreviation~~	~~Description~~		
~~Fluorescent Twin (18W - F18TT Lamp)~~						
~~1~~	~~FT18W/2G11~~	~~1~~	~~MAG EE~~	~~Magnetic Energy Efficient~~	~~23~~	
~~2~~	~~FT18W/2G11~~	~~1~~	~~MAG EE~~	~~Magnetic Energy Efficient~~	~~46~~	

~~3~~	~~FT18W/2G11~~	~~1.5~~	~~MAG EE~~	~~Magnetic Energy Efficient~~	~~69~~	~~Tandem wired~~
~~3~~	~~FT18W/2G11~~	~~2~~	~~MAG EE~~	~~Magnetic Energy Efficient~~	~~69~~	
~~4~~	~~FT18W/2G11~~	~~2~~	~~MAG EE~~	~~Magnetic Energy Efficient~~	~~92~~	~~(2) Two-lamp ballasts~~
~~1~~	~~FT18W/2G11~~	~~1~~	~~ELECT~~	~~Electronic~~	~~17~~	
~~2~~	~~FT18W/2G11~~	~~1~~	~~ELECT~~	~~Electronic~~	~~35~~	
~~3~~	~~FT18W/2G11~~	~~1.5~~	~~ELECT~~	~~Electronic~~	~~52~~	~~Tandem wired~~
~~3~~	~~FT18W/2G11~~	~~2~~	~~ELECT~~	~~Electronic~~	~~52~~	
~~4~~	~~FT18W/2G11~~	~~2~~	~~ELECT~~	~~Electronic~~	~~70~~	~~(2) Two-lamp ballasts~~
			~~Fluorescent Twin (24-27W- F24TT or F27TT Lamp)~~			
~~1~~	~~FT24W/2G11~~	~~1~~	~~MAG EE~~	~~Magnetic Energy Efficient~~	~~32~~	
~~2~~	~~FT24W/2G11~~	~~1~~	~~MAG EE~~	~~Magnetic Energy Efficient~~	~~66~~	
~~3~~	~~FT24W/2G11~~	~~1.5~~	~~MAG EE~~	~~Magnetic Energy Efficient~~	~~99~~	~~Tandem wired~~
~~3~~	~~FT24W/2G11~~	~~2~~	~~MAG EE~~	~~Magnetic Energy Efficient~~	~~98~~	
~~4~~	~~FT24W/2G11~~	~~2~~	~~MAG EE~~	~~Magnetic Energy Efficient~~	~~132~~	~~(2) Two-lamp ballasts~~
~~1~~	~~FT24W/2G11~~	~~1~~	~~ELECT~~	~~Electronic~~	~~21~~	
~~2~~	~~FT24W/2G11~~	~~1~~	~~ELECT~~	~~Electronic~~	~~43~~	
~~3~~	~~FT24W/2G11~~	~~1.5~~	~~ELECT~~	~~Electronic~~	~~64~~	~~Tandem wired~~
~~3~~	~~FT24W/2G11~~	~~2~~	~~ELECT~~	~~Electronic~~	~~64~~	
~~4~~	~~FT24W/2G11~~	~~2~~	~~ELECT~~	~~Electronic~~	~~86~~	~~(2) Two-lamp ballasts~~
			~~Fluorescent Twin (36-39W - F36TT or F39TT Lamp)~~			
~~1~~	~~FT36W/2G11~~	~~1~~	~~MAG EE~~	~~Magnetic Energy Efficient~~	~~51~~	
~~2~~	~~FT36W/2G11~~	~~1~~	~~MAG EE~~	~~Magnetic Energy Efficient~~	~~66~~	
~~3~~	~~FT36W/2G11~~	~~1.5~~	~~MAG EE~~	~~Magnetic Energy Efficient~~	~~99~~	~~Tandem wired~~
~~3~~	~~FT36W/2G11~~	~~2~~	~~MAG EE~~	~~Magnetic Energy Efficient~~	~~117~~	
~~4~~	~~FT36W/2G11~~	~~2~~	~~MAG EE~~	~~Magnetic Energy Efficient~~	~~132~~	~~(2) Two-lamp ballasts~~
~~1~~	~~FT36W/2G11~~	~~1~~	~~ELECT~~	~~Electronic~~	~~37~~	
~~2~~	~~FT36W/2G11~~	~~1~~	~~ELECT~~	~~Electronic~~	~~70~~	
~~3~~	~~FT36W/2G11~~	~~1.5~~	~~ELECT~~	~~Electronic~~	~~105~~	~~Tandem wired~~
~~3~~	~~FT36W/2G11~~	~~2~~	~~ELECT~~	~~Electronic~~	~~107~~	
~~4~~	~~FT36W/2G11~~	~~2~~	~~ELECT~~	~~Electronic~~	~~140~~	~~(2) Two-lamp~~

~~ballasts~~

~~LUMINAIRE LUMIN.~~ ~~Table B-101~~

~~Lamp~~		~~Ballast~~			~~Watts/ Luminaire~~	~~Comments~~
~~No.~~	~~Designation~~	~~No.~~	~~Abbreviation~~	~~Description~~		
[redacted]						
~~Fluorescent Twin (40 W - F40TT Lamp)~~						
~~1~~	~~FT40W/2G11~~	~~1~~	~~MAG EE~~	~~Magnetic Energy Efficient~~	~~43~~	
~~2~~	~~FT40W/2G11~~	~~1~~	~~MAG EE~~	~~Magnetic Energy Efficient~~	~~86~~	
~~3~~	~~FT40W/2G11~~	~~1.5~~	~~MAG EE~~	~~Magnetic Energy Efficient~~	~~129~~	~~Tandem wired~~
~~3~~	~~FT40W/2G11~~	~~2~~	~~MAG EE~~	~~Magnetic Energy Efficient~~	~~130~~	
~~4~~	~~FT40W/2G11~~	~~2~~	~~MAG EE~~	~~Magnetic Energy Efficient~~	~~172~~	~~(2) Two-lamp ballasts~~
~~1~~	~~FT40W/2G11~~	~~1~~	~~ELECT~~	~~Electronic~~	~~36~~	
~~2~~	~~FT40W/2G11~~	~~1~~	~~ELECT~~	~~Electronic~~	~~71~~	
~~2~~	~~FT40W/2G11~~	~~1~~	~~ELECT~~	~~Electronic~~	~~70~~	
~~3~~	~~FT40W/2G11~~	~~1~~	~~ELECT~~	~~Electronic~~	~~98~~	
~~3~~	~~FT40W/2G11~~	~~1.5~~	~~ELECT~~	~~Electronic~~	~~106~~	~~Tandem wired~~
~~3~~	~~FT40W/2G11~~	~~2~~	~~ELECT~~	~~Electronic~~	~~107~~	
~~4~~	~~FT40W/2G11~~	~~2~~	~~ELECT~~	~~Electronic~~	~~142~~	~~(2) Two-lamp ballasts~~
~~2~~	~~FT40W/2G11~~	~~1~~	~~ELECT RO~~	~~Elec. Reduce Output (75%)~~	~~59~~	
~~3~~	~~FT40W/2G11~~	~~1.5~~	~~ELECT DIM~~	~~Electronic Dimming (to 1%)~~	~~105~~	~~Tandem wired~~
~~4~~	~~FT40W/2G11~~	~~2~~	~~ELECT DIM~~	~~Electronic Dimming (to 1%)~~	~~140~~	~~(2) two-lamp ballasts~~
~~Fluorescent Twin (50 W - F50TT Lamp)~~						
~~1~~	~~FT50W/2G11~~	~~1~~	~~ELECT~~	~~Electronic~~	~~54~~	
~~2~~	~~FT50W/2G11~~	~~1~~	~~ELECT~~	~~Electronic~~	~~106~~	
~~3~~	~~FT50W/2G11~~	~~1~~	~~ELECT~~	~~Electronic~~	~~98~~	
~~3~~	~~FT50W/2G11~~	~~1.5~~	~~ELECT~~	~~Electronic~~	~~159~~	~~Tandem wired~~
~~3~~	~~FT50W/2G11~~	~~2~~	~~ELECT~~	~~Electronic~~	~~160~~	
~~4~~	~~FT50W/2G11~~	~~2~~	~~ELECT~~	~~Electronic~~	~~212~~	~~(2) Two-lamp~~

						~~ballasts~~
			~~Fluorescent Twin (55 W - F55TT Lamp)~~			
~~1~~	~~FT55W/2G11~~	~~1~~	~~ELECT~~	~~Electronic~~	~~62~~	
[redacted]						
			~~2 ft. Fluorescent U-Tube Octic (32W - FBO31T8 Lamp)~~			
~~1~~	~~FB31T8~~	~~0.5~~	~~MAG EE~~	~~Magnetic Energy Efficient~~	~~35~~	~~Tandem wired~~
~~1~~	~~FB31T8~~	~~1~~	~~MAG EE~~	~~Magnetic Energy Efficient~~	~~36~~	
~~2~~	~~FB31T8~~	~~1~~	~~MAG EE~~	~~Magnetic Energy Efficient~~	~~69~~	
~~3~~	~~FB31T8~~	~~1.5~~	~~MAG EE~~	~~Magnetic Energy Efficient~~	~~104~~	~~Tandem wired~~
~~3~~	~~FB31T8~~	~~2~~	~~MAG EE~~	~~Magnetic Energy Efficient~~	~~105~~	

~~LUMINAIRE POWER~~ ~~Table B-101~~

~~Lamp~~		~~Ballast~~			~~Watts/~~	
~~No.~~	~~Designation~~	~~No.~~	~~Abbreviation~~	~~Description~~	~~Luminaire~~	~~Comments~~
[redacted]						
~~1~~	~~FB31T8~~	~~0.5~~	~~ELECT~~	~~Electronic~~	~~31~~	~~Tandem wired~~
~~1~~	~~FB31T8~~	~~1~~	~~ELECT~~	~~Electronic~~	~~39~~	
~~2~~	~~FB31T8~~	~~1~~	~~ELECT~~	~~Electronic~~	~~62~~	
~~3~~	~~FB31T8~~	~~1~~	~~ELECT~~	~~Electronic~~	~~92~~	
~~3~~	~~FB31T8~~	~~1.5~~	~~ELECT~~	~~Electronic~~	~~93~~	~~Tandem wired~~
~~3~~	~~FB31T8~~	~~2~~	~~ELECT~~	~~Electronic~~	~~101~~	
~~2~~	~~FB31T8~~	~~1~~	~~ELECT IS~~	~~Electronic Instant Start~~	~~61~~	
~~3~~	~~FB31T8~~	~~1~~	~~ELECT IS~~	~~Electronic Instant Start~~	~~88~~	
			~~2 ft. Fluorescent U-Tube Energy-Saving (34W)~~			
~~1~~	~~FB40T12/ES~~	~~0.5~~	~~MAG EE~~	~~Magnetic Energy Efficient~~	~~36~~	~~Tandem wired~~
~~1~~	~~FB40T12/ES~~	~~1~~	~~MAG EE~~	~~Magnetic Energy Efficient~~	~~43~~	
~~2~~	~~FB40T12/ES~~	~~1~~	~~MAG EE~~	~~Magnetic Energy Efficient~~	~~72~~	
~~3~~	~~FB40T12/ES~~	~~1~~	~~MAG EE~~	~~Magnetic Energy Efficient~~	~~105~~	
~~3~~	~~FB40T12/ES~~	~~1.5~~	~~MAG EE~~	~~Magnetic Energy Efficient~~	~~108~~	~~Tandem wired~~
~~3~~	~~FB40T12/ES~~	~~2~~	~~MAG EE~~	~~Magnetic Energy Efficient~~	~~115~~	
~~1~~	~~FB40T12/ES~~	~~0.5~~	~~ELECT~~	~~Electronic~~	~~30~~	~~Tandem wired~~
~~1~~	~~FB40T12/ES~~	~~1~~	~~ELECT~~	~~Electronic~~	~~31~~	

~~2~~	~~FB40T12/ES~~	~~1~~	~~ELECT~~	~~Electronic~~	~~59~~	
~~3~~	~~FB40T12/ES~~	~~1~~	~~ELECT~~	~~Electronic~~	~~90~~	
~~3~~	~~FB40T12/ES~~	~~1.5~~	~~ELECT~~	~~Electronic~~	~~88~~	~~Tandem wired~~
~~3~~	~~FB40T12/ES~~	~~2~~	~~ELECT~~	~~Electronic~~	~~90~~	
~~2 ft. Fluorescent U-Tube Standard (40W - FB40T12 Lamp)~~						
~~1~~	~~FB40T12~~	~~0.5~~	~~MAG EE~~	~~Magnetic Energy Efficient~~	~~43~~	~~Tandem wired~~
~~1~~	~~FB40T12~~	~~1~~	~~MAG EE~~	~~Magnetic Energy Efficient~~	~~48~~	
~~2~~	~~FB40T12~~	~~1~~	~~MAG EE~~	~~Magnetic Energy Efficient~~	~~86~~	
~~3~~	~~FB40T12~~	~~1~~	~~MAG EE~~	~~Magnetic Energy Efficient~~	~~127~~	
~~3~~	~~FB40T12~~	~~1.5~~	~~MAG EE~~	~~Magnetic Energy Efficient~~	~~129~~	~~Tandem wired~~
~~3~~	~~FB40T12~~	~~2~~	~~MAG EE~~	~~Magnetic Energy Efficient~~	~~134~~	
~~1~~	~~FB40T12~~	~~0.5~~	~~ELECT~~	~~Electronic~~	~~35~~	~~Tandem wired~~
~~1~~	~~FB40T12~~	~~1~~	~~ELECT~~	~~Electronic~~	~~36~~	
~~2~~	~~FB40T12~~	~~1~~	~~ELECT~~	~~Electronic~~	~~67~~	
~~3~~	~~FB40T12~~	~~1~~	~~ELECT~~	~~Electronic~~	~~100~~	
~~3~~	~~FB40T12~~	~~1.5~~	~~ELECT~~	~~Electronic~~	~~101~~	~~Tandem wired~~
~~3~~	~~FB40T12~~	~~2~~	~~ELECT~~	~~Electronic~~	~~103~~	

~~LUMINAIRE POWER~~

~~Table B-101~~

~~Lamp~~		~~Ballast~~			~~Watts/~~	
~~No.~~	~~Designation~~	~~No.~~	~~Abbreviation~~	~~Description~~	~~Luminaire~~	~~Comments~~
[redacted]						
~~Fluorescent Preheat T5 (4W)~~						
~~1~~	~~F4T5~~	~~1~~	~~MAG STD~~	~~Magnetic Standard~~	~~8~~	~~6" MOL~~
~~Fluorescent Preheat T5 (6W)~~						
~~1~~	~~F6T5~~	~~1~~	~~MAG STD~~	~~Magnetic Standard~~	~~10~~	~~9" MOL~~
~~Fluorescent Preheat T5 (8W)~~						
~~1~~	~~F8T5~~	~~1~~	~~MAG STD~~	~~Magnetic Standard~~	~~12~~	~~12" MOL~~
~~Fluorescent Preheat T8 (15W)~~						
~~1~~	~~F15T8~~	~~1~~	~~MAG STD~~	~~Magnetic Standard~~	~~19~~	~~18" MOL~~
~~Fluorescent Preheat T12 (15W)~~						
~~1~~	~~F15T12~~	~~1~~	~~MAG STD~~	~~Magnetic Standard~~	~~19~~	~~18" MOL~~
~~Fluorescent Preheat T12 (20W)~~						

~~1~~	~~F20T12~~	~~1~~	~~MAG STD~~	~~Magnetic Standard~~	~~25~~	~~24" MOL~~
~~2~~	~~F20T12~~	~~1~~	~~MAG STD~~	~~Magnetic Standard~~	~~50~~	~~24" MOL~~
~~Fluorescent Preheat T8 (30W)~~						
~~1~~	~~F30T8~~	~~1~~	~~MAG STD~~	~~Magnetic Standard~~	~~46~~	~~30" MOL~~
~~2~~	~~F30T8~~	~~1~~	~~MAG STD~~	~~Magnetic Standard~~	~~79~~	~~30" MOL~~
~~Fluorescent Preheat T12 (30W)~~						
~~1~~	~~F30T12~~	~~1~~	~~MAG STD~~	~~Magnetic Standard~~	~~46~~	~~30" MOL~~
~~2~~	~~F30T12~~	~~1~~	~~MAG STD~~	~~Magnetic Standard~~	~~79~~	~~30" MOL~~
~~2~~	~~F30T12~~	~~1~~	~~MAG EE~~	~~Magnetic Energy Efficient~~	~~74~~	~~30" MOL~~
~~1~~	~~F30T12~~	~~1~~	~~ELECT~~	~~Electronic~~	~~31~~	~~30" MOL~~
~~2~~	~~F30T12~~	~~2~~	~~ELECT~~	~~Electronic~~	~~63~~	~~30" MOL~~
[redacted]						
~~2 foot Fluorescent Rapid Start T8 (17W)~~						
~~1~~	~~F17T8~~	~~1~~	~~MAG EE~~	~~Magnetic Energy Efficient~~	~~24~~	
~~2~~	~~F17T8~~	~~1~~	~~MAG EE~~	~~Magnetic Energy Efficient~~	~~45~~	
~~1~~	~~F17T8~~	~~1~~	~~ELECT~~	~~Electronic~~	~~22~~	
~~2~~	~~F17T8~~	~~1~~	~~ELECT~~	~~Electronic~~	~~33~~	
~~3~~	~~F17T8~~	~~1~~	~~ELECT~~	~~Electronic~~	~~53~~	
~~3~~	~~F17T8~~	~~2~~	~~ELECT~~	~~Electronic~~	~~55~~	
~~4~~	~~F17T8~~	~~1~~	~~ELECT~~	~~Electronic~~	~~63~~	
~~4~~	~~F17T8~~	~~2~~	~~ELECT~~	~~Electronic~~	~~66~~	~~(2) two-lamp ballasts~~

~~LUMINAIRE POWER~~ ~~Table B-101~~

~~Lamp~~		~~Ballast~~			~~Watts/ Luminaire~~	~~Comments~~
~~No.~~	~~Designation~~	~~No.~~	~~Abbreviation~~	~~Description~~		
[redacted]						
~~3 foot Fluorescent Rapid Start T8 (25W)~~						
~~1~~	~~F25T8~~	~~1~~	~~MAG EE~~	~~Magnetic Energy Efficient~~	~~33~~	
~~2~~	~~F25T8~~	~~1~~	~~MAG EE~~	~~Magnetic Energy Efficient~~	~~65~~	
~~1~~	~~F25T8~~	~~1~~	~~ELECT~~	~~Electronic~~	~~27~~	
~~2~~	~~F25T8~~	~~1~~	~~ELECT~~	~~Electronic~~	~~48~~	
~~3~~	~~F25T8~~	~~1~~	~~ELECT~~	~~Electronic~~	~~68~~	

~~3~~	~~F25T8~~	~~2~~	~~ELECT~~	~~Electronic~~	~~75~~	
~~4~~	~~F25T8~~	~~1~~	~~ELECT~~	~~Electronic~~	~~89~~	
~~4~~	~~F25T8~~	~~2~~	~~ELECT~~	~~Electronic~~	~~96~~	~~(2) two-lamp ballasts~~
~~4 foot Fluorescent Rapid Start Octic (32W)~~						
~~1~~	~~F32T8~~	~~0.5~~	~~MAG EE~~	~~Magnetic Energy Efficient~~	~~35~~	~~Tandem wired~~
~~1~~	~~F32T8~~	~~1~~	~~MAG EE~~	~~Magnetic Energy Efficient~~	~~39~~	
~~2~~	~~F32T8~~	~~1~~	~~MAG EE~~	~~Magnetic Energy Efficient~~	~~70~~	
~~3~~	~~F32T8~~	~~1.5~~	~~MAG EE~~	~~Magnetic Energy Efficient~~	~~105~~	~~Tandem wired~~
~~3~~	~~F32T8~~	~~2~~	~~MAG EE~~	~~Magnetic Energy Efficient~~	~~109~~	
~~4~~	~~F32T8~~	~~2~~	~~MAG EE~~	~~Magnetic Energy Efficient~~	~~140~~	~~(2) two-lamp ballasts~~
~~1~~	~~F32T8~~	~~0.5~~	~~ELECT~~	~~Electronic~~	~~31~~	~~Tandem wired~~
~~1~~	~~F32T8~~	~~1~~	~~ELECT~~	~~Electronic~~	~~32~~	
~~2~~	~~F32T8~~	~~1~~	~~ELECT~~	~~Electronic~~	~~62~~	
~~3~~	~~F32T8~~	~~1~~	~~ELECT~~	~~Electronic~~	~~93~~	
~~3~~	~~F32T8~~	~~1.5~~	~~ELECT~~	~~Electronic~~	~~93~~	~~Tandem wired~~
~~3~~	~~F32T8~~	~~2~~	~~ELECT~~	~~Electronic~~	~~94~~	
~~4~~	~~F32T8~~	~~1~~	~~ELECT~~	~~Electronic~~	~~114~~	
~~4~~	~~F32T8~~	~~2~~	~~ELECT~~	~~Electronic~~	~~124~~	~~(2) two-lamp ballasts~~
~~2~~	~~F32T8~~	~~1~~	~~ELECT IS~~	~~Electronic Instant Start~~	~~63~~	
~~3~~	~~F32T8~~	~~1~~	~~ELECT IS~~	~~Electronic Instant Start~~	~~96~~	
~~3~~	~~F32T8~~	~~1.5~~	~~ELECT IS~~	~~Electronic Instant Start~~	~~95~~	~~Tandem wired~~
~~4~~	~~F32T8~~	~~1~~	~~ELECT IS~~	~~Electronic Instant Start~~	~~124~~	
~~4~~	~~F32T8~~	~~2~~	~~ELECT IS~~	~~Electronic Instant Start~~	~~126~~	~~(2) two-lamp ballasts~~

~~LUMINAIRE POWER~~ ~~Table B-101~~

~~Lamp~~		~~Ballast~~			~~Watts/ Luminaire~~	~~Comments~~
~~No.~~	~~Designation~~	~~No.~~	~~Abbreviation~~	~~Description~~		
[redacted]						
~~4 foot Fluorescent Rapid Start Octic (32W) (cont.)~~						
~~2~~	~~F32T8~~	~~1~~	~~ELECT RO~~	~~Electronic Reduce Output (75%)~~	~~51~~	
~~3~~	~~F32T8~~	~~1~~	~~ELECT RO~~	~~Electronic Reduce Output (75%)~~	~~76~~	
~~3~~	~~F32T8~~	~~1.5~~	~~ELECT RO~~	~~Electronic Reduce Output (75%)~~	~~77~~	~~Tandem wired~~
~~4~~	~~F32T8~~	~~1~~	~~ELECT RO~~	~~Electronic Reduce Output (75%)~~	~~100~~	
~~4~~	~~F32T8~~	~~2~~	~~ELECT RO~~	~~Electronic Reduce Output (75%)~~	~~102~~	~~(2) two-lamp ballasts~~
~~2~~	~~F32T8~~	~~1~~	~~ELECT TL~~	~~Electronic Two Level (50 & 100%)~~	~~65~~	
~~3~~	~~F32T8~~	~~1.5~~	~~ELECT TL~~	~~Electronic Two Level (50 & 100%)~~	~~98~~	~~Tandem wired~~
~~4~~	~~F32T8~~	~~2~~	~~ELECT TL~~	~~Electronic Two Level (50 & 100%)~~	~~130~~	~~(2) two-lamp ballasts~~
~~2~~	~~F32T8~~	~~1~~	~~ELECT AO~~	~~Electronic Adjustable Output (to 15%)~~	~~73~~	
~~3~~	~~F32T8~~	~~1.5~~	~~ELECT AO~~	~~Electronic Adjustable Output (to 15%)~~	~~110~~	~~Tandem wired~~
~~4~~	~~F32T8~~	~~2~~	~~ELECT AO~~	~~Electronic Adjustable Output (to 15%)~~	~~146~~	~~(2) two-lamp ballasts~~
~~2~~	~~F32T8~~	~~1~~	~~ELECT DIM~~	~~Electronic Dimming (to 1%)~~	~~75~~	
~~3~~	~~F32T8~~	~~1.5~~	~~ELECT DIM~~	~~Electronic Dimming (to 1%)~~	~~113~~	~~Tandem wired~~
~~4~~	~~F32T8~~	~~2~~	~~ELECT DIM~~	~~Electronic Dimming (to 1%)~~	~~150~~	~~(2) two-lamp ballasts~~
~~5 foot Fluorescent Rapid Start (40W)~~						
~~1~~	~~F40T8~~	~~1~~	~~MAG EE~~	~~Magnetic Energy Efficient~~	~~50~~	
~~2~~	~~F40T8~~	~~1~~	~~MAG EE~~	~~Magnetic Energy Efficient~~	~~92~~	
~~1~~	~~F40T8~~	~~1~~	~~ELECT~~	~~Electronic~~	~~46~~	
~~2~~	~~F40T8~~	~~1~~	~~ELECT~~	~~Electronic~~	~~79~~	
~~3~~	~~F40T8~~	~~2~~	~~ELECT~~	~~Electronic~~	~~109~~	

		3 foot Fluorescent Rapid Start Energy-Saving (25W)				
1	F30T12/ES	1	MAG STD	Magnetic Standard	42	
2	F30T12/ES	1	MAG STD	Magnetic Standard	74	
3	F30T12/ES	1.5	MAG STD	Magnetic Standard	111	Tandem wired
3	F30T12/ES	2	MAG STD	Magnetic Standard	116	
2	F30T12/ES	1	MAG EE	Magnetic Energy Efficient	66	
1	F30T12/ES	1	ELECT	Electronic	26	
2	F30T12/ES	1	ELECT	Electronic	53	

LUMINAIRE POWER Table B-101

Lamp		Ballast			Watts/	
No.	Designation	No.	Abbreviation	Description	Luminaire	Comments
		3 foot Fluorescent Rapid Start Standard (30W)				
1	F30T12	1	MAG STD	Magnetic Standard	46	
2	F30T12	1	MAG STD	Magnetic Standard	79	
3	F30T12	1.5	MAG STD	Magnetic Standard	118	Tandem wired
3	F30T12	2	MAG STD	Magnetic Standard	125	
		4 foot Fluorescent Rapid Start Energy-Saving Plus (32W)				
1	F40T12/ES Plus	0.5	MAG EE	Magnetic Energy Efficient	34	Tandem wired
1	F40T12/ES Plus	1	MAG EE	Magnetic Energy Efficient	41	
2	F40T12/ES Plus	1	MAG EE	Magnetic Energy Efficient	68	
3	F40T12/ES Plus	1	MAG EE	Magnetic Energy Efficient	99	
3	F40T12/ES Plus	1.5	MAG EE	Magnetic Energy Efficient	102	Tandem wired
3	F40T12/ES Plus	2	MAG EE	Magnetic Energy Efficient	109	
4	F40T12/ES Plus	2	MAG EE	Magnetic Energy Efficient	136	(2) Two-lamp ballasts
		4 foot Fluorescent Rapid Start Energy-Saving (34W)				
1	F40T12/ES	0.5	MAG STD**	Magnetic Standard	42	Tandem wired
1	F40T12/ES	1	MAG STD**	Magnetic Standard	48	
2	F40T12/ES	1	MAG STD**	Magnetic Standard	82	
3	F40T12/ES	1.5	MAG STD**	Magnetic Standard	122	Tandem wired

3	F40T12/ES	2	MAG STD**	Magnetic Standard	130	
4	F40T12/ES	2	MAG STD**	Magnetic Standard	164	(2) Two-lamp ballasts
1	F40T12/ES	0.5	MAG EE	Magnetic Energy Efficient	36	Tandem wired
1	F40T12/ES	1	MAG EE	Magnetic Energy Efficient	43	
2	F40T12/ES	1	MAG EE	Magnetic Energy Efficient	72	
3	F40T12/ES	1	MAG EE	Magnetic Energy Efficient	105	
3	F40T12/ES	1.5	MAG EE	Magnetic Energy Efficient	108	Tandem wired
3	F40T12/ES	2	MAG EE	Magnetic Energy Efficient	112	
4	F40T12/ES	2	MAG EE	Magnetic Energy Efficient	144	(2) Two-lamp ballasts
2	F40T12/ES	1	MAG HC	Magnetic Heater Cutout	58	
3	F40T12/ES	1.5	MAG HC	Magnetic Heater Cutout	87	Tandem wired
4	F40T12/ES	2	MAG HC	Magnetic Heater Cutout	116	(2) Two-lamp ballasts
2	F40T12/ES	1	MAG HC FO	Mag. Heater Cutout Full Light	66	
3	F40T12/ES	1.5	MAG HC FO	Mag. Heater Cutout Full Light	99	Tandem wired
4	F40T12/ES	2	MAG HC FO	Mag. Heater Cutout Full Light	132	(2) Two-lamp ballasts

LUMINAIRE POWER Table B-101

Lamp		Ballast			Watts/	
No.	Designation	No.	Abbreviation	Description	Luminaire	Comments
[redacted]						
4 foot Fluorescent Rapid Start Energy-Saving (34W) (cont.)						
1	F40T12/ES	0.5	ELECT	Electronic	30	Tandem wired
1	F40T12/ES	1	ELECT	Electronic	31	
2	F40T12/ES	1	ELECT	Electronic	62	
3	F40T12/ES	1	ELECT	Electronic	90	
3	F40T12/ES	1.5	ELECT	Electronic	93	Tandem wired
3	F40T12/ES	2	ELECT	Electronic	93	
4	F40T12/ES	1	ELECT	Electronic	121	
4	F40T12/ES	2	ELECT	Electronic	124	(2) Two-lamp ballasts

~~2~~	~~F40T12/ES~~	~~1~~	~~ELECT AO~~	~~Elec. Adjustable Output (to 15%)~~	~~60~~	
~~3~~	~~F40T12/ES~~	~~1.5~~	~~ELECT AO~~	~~Elec. Adjustable Output (to 15%)~~	~~90~~	~~Tandem wired~~
~~4~~	~~F40T12/ES~~	~~2~~	~~ELECT AO~~	~~Elec. Adjustable Output (to 15%)~~	~~120~~	~~(2) Two-lamp ballasts~~
[redacted]						
~~4 foot Fluorescent Rapid Start Standard (40W)~~						
~~1~~	~~F40T12~~	~~0.5~~	~~MAG STD**~~	~~Magnetic Standard~~	~~26~~	~~Tandem wired~~
~~1~~	~~F40T12~~	~~1~~	~~MAG STD**~~	~~Magnetic Standard~~	~~52~~	
~~2~~	~~F40T12~~	~~1~~	~~MAG STD**~~	~~Magnetic Standard~~	~~96~~	
~~3~~	~~F40T12~~	~~1.5~~	~~MAG STD**~~	~~Magnetic Standard~~	~~144~~	~~Tandem wired~~
~~3~~	~~F40T12~~	~~2~~	~~MAG STD**~~	~~Magnetic Standard~~	~~148~~	
~~4~~	~~F40T12~~	~~2~~	~~MAG STD**~~	~~Magnetic Standard~~	~~192~~	~~(2) Two-lamp ballasts~~
~~1~~	~~F40T12~~	~~0.5~~	~~MAG EE~~	~~Magnetic Energy Efficient~~	~~44~~	~~Tandem wired~~
~~1~~	~~F40T12~~	~~1~~	~~MAG EE~~	~~Magnetic Energy Efficient~~	~~46~~	
~~2~~	~~F40T12~~	~~1~~	~~MAG EE~~	~~Magnetic Energy Efficient~~	~~88~~	
~~3~~	~~F40T12~~	~~1~~	~~MAG EE~~	~~Magnetic Energy Efficient~~	~~127~~	
~~3~~	~~F40T12~~	~~1.5~~	~~MAG EE~~	~~Magnetic Energy Efficient~~	~~132~~	~~Tandem wired~~
~~3~~	~~F40T12~~	~~2~~	~~MAG EE~~	~~Magnetic Energy Efficient~~	~~134~~	
~~4~~	~~F40T12~~	~~2~~	~~MAG EE~~	~~Magnetic Energy Efficient~~	~~176~~	~~(2) Two-lamp ballasts~~
~~2~~	~~F40T12~~	~~1~~	~~MAG HC~~	~~Magnetic Heater Cutout~~	~~71~~	
~~3~~	~~F40T12~~	~~1.5~~	~~MAG HC~~	~~Magnetic Heater Cutout~~	~~107~~	~~Tandem wired~~
~~4~~	~~F40T12~~	~~2~~	~~MAG HC~~	~~Magnetic Heater Cutout~~	~~142~~	~~(2) Two-lamp ballasts~~

~~LUMINAIRE POWER~~ ~~Table B-101~~

~~Lamp~~		~~Ballast~~			~~Watts/~~	
~~No.~~	~~Designation~~	~~No.~~	~~Abbreviation~~	~~Description~~	~~Luminaire~~	~~Comments~~
[redacted]						
~~4 foot Fluorescent Rapid Start Standard (40W) (cont.)~~						
~~2~~	~~F40T12~~	~~1~~	~~MAG HC FO~~	~~Magnetic Heater Cutout Full Light~~	~~80~~	
~~3~~	~~F40T12~~	~~1.5~~	~~MAG HC FO~~	~~Magnetic Heater Cutout Full Light~~	~~120~~	~~Tandem wired~~

~~4~~	~~F40T12~~	~~2~~	~~MAG HC FO~~	~~Magnetic Heater Cutout Full Light~~	~~160~~	~~(2) Two-lamp ballasts~~
~~1~~	~~F40T12~~	~~0.5~~	~~ELECT~~	~~Electronic~~	~~36~~	~~Tandem wired~~
~~1~~	~~F40T12~~	~~1~~	~~ELECT~~	~~Electronic~~	~~37~~	
~~2~~	~~F40T12~~	~~1~~	~~ELECT~~	~~Electronic~~	~~72~~	
~~3~~	~~F40T12~~	~~1~~	~~ELECT~~	~~Electronic~~	~~107~~	
~~3~~	~~F40T12~~	~~1.5~~	~~ELECT~~	~~Electronic~~	~~108~~	~~Tandem wired~~
~~3~~	~~F40T12~~	~~2~~	~~ELECT~~	~~Electronic~~	~~109~~	
~~4~~	~~F40T12~~	~~1~~	~~ELECT~~	~~Electronic~~	~~135~~	
~~4~~	~~F40T12~~	~~2~~	~~ELECT~~	~~Electronic~~	~~144~~	~~(2) Two-lamp ballasts~~
~~2~~	~~F40T12~~	~~1~~	~~ELECT RO~~	~~Electronic Reduce Output (75%)~~	~~61~~	
~~3~~	~~F40T12~~	~~1~~	~~ELECT RO~~	~~Electronic Reduce Output (75%)~~	~~90~~	
~~3~~	~~F40T12~~	~~1.5~~	~~ELECT RO~~	~~Electronic Reduce Output (75%)~~	~~92~~	~~Tandem wired~~
~~4~~	~~F40T12~~	~~2~~	~~ELECT RO~~	~~Electronic Reduce Output (75%)~~	~~122~~	~~(2) Two-lamp ballasts~~
~~2~~	~~F40T12~~	~~1~~	~~ELECT TL~~	~~Elec. Two Level (50 & 100%)~~	~~69~~	
~~3~~	~~F40T12~~	~~1.5~~	~~ELECT TL~~	~~Elec. Two Level (50 & 100%)~~	~~104~~	~~Tandem wired~~
~~4~~	~~F40T12~~	~~2~~	~~ELECT TL~~	~~Elec. Two Level (50 & 100%)~~	~~138~~	~~(2) Two-lamp ballasts~~
~~2~~	~~F40T12~~	~~1~~	~~ELECT AO~~	~~Elec. Adjustable Output (to 15%)~~	~~73~~	
~~3~~	~~F40T12~~	~~1.5~~	~~ELECT AO~~	~~Elec. Adjustable Output (to 15%)~~	~~110~~	~~Tandem wired~~
~~4~~	~~F40T12~~	~~2~~	~~ELECT AO~~	~~Elec. Adjustable Output (to 15%)~~	~~146~~	~~(2) Two-lamp ballasts~~
~~2~~	~~F40T12~~	~~1~~	~~ELECT DIM~~	~~Electronic Dimming (to 1%)~~	~~83~~	
~~3~~	~~F40T12~~	~~1.5~~	~~ELECT DIM~~	~~Electronic Dimming (to 1%)~~	~~125~~	~~Tandem wired~~
~~4~~	~~F40T12~~	~~2~~	~~ELECT DIM~~	~~Electronic Dimming (to 1%)~~	~~166~~	~~(2) Two-lamp ballasts~~

~~LUMINAIRE POWER~~ ~~Table B-101~~

~~Lamp~~		~~Ballast~~			~~Watts/~~	
~~No.~~	~~Designation~~	~~No.~~	~~Abbreviation~~	~~Description~~	~~Luminaire~~	~~Comments~~

	~~4 foot Fluorescent Rapid Start Extended Output (42W)~~					
~~2~~	~~F40T10/EO~~	~~1~~	~~MAG EE~~	~~Magnetic Energy Efficient~~	~~92~~	
~~3~~	~~F40T10/EO~~	~~1.5~~	~~MAG EE~~	~~Magnetic Energy Efficient~~	~~138~~	~~Tandem wired~~
~~4~~	~~F40T10/EO~~	~~2~~	~~MAG EE~~	~~Magnetic Energy Efficient~~	~~184~~	~~(2) Two-lamp ballasts~~
~~2~~	~~F40T10/EO~~	~~1~~	~~MAG HC~~	~~Magnetic Heater Cutout~~	~~74~~	
~~3~~	~~F40T10/EO~~	~~1.5~~	~~MAG HC~~	~~Magnetic Heater Cutout~~	~~111~~	~~Tandem wired~~
~~4~~	~~F40T10/EO~~	~~2~~	~~MAG HC~~	~~Magnetic Heater Cutout~~	~~148~~	~~(2) Two-lamp ballasts~~
~~2~~	~~F40T10/EO~~	~~1~~	~~ELECT~~	~~Electronic~~	~~74~~	
~~3~~	~~F40T10/EO~~	~~1.5~~	~~ELECT~~	~~Electronic~~	~~111~~	~~Tandem wired~~
~~4~~	~~F40T10/EO~~	~~2~~	~~ELECT~~	~~Electronic~~	~~148~~	~~(2) Two-lamp ballasts~~
~~2~~	~~F40T10/EO~~	~~1~~	~~ELECT RO~~	~~Electronic Reduce Output (75%)~~	~~63~~	
~~3~~	~~F40T10/EO~~	~~1.5~~	~~ELECT RO~~	~~Electronic Reduce Output (75%)~~	~~95~~	~~Tandem wired~~
~~4~~	~~F40T10/EO~~	~~2~~	~~ELECT RO~~	~~Electronic Reduce Output (75%)~~	~~126~~	~~(2) Two-lamp ballasts~~
~~2~~	~~F40T10/EO~~	~~1~~	~~ELECT TL~~	~~Elec. Two Level (50 & 100%)~~	~~72~~	
~~3~~	~~F40T10/EO~~	~~1.5~~	~~ELECT TL~~	~~Elec. Two Level (50 & 100%)~~	~~108~~	~~Tandem wired~~
~~4~~	~~F40T10/EO~~	~~2~~	~~ELECT TL~~	~~Elec. Two Level (50 & 100%)~~	~~144~~	~~(2) Two-lamp ballasts~~
~~2~~	~~F40T10/EO~~	~~1~~	~~ELECT AO~~	~~Elec. Adjustable Output (to 15%)~~	~~73~~	
~~3~~	~~F40T10/EO~~	~~1.5~~	~~ELECT AO~~	~~Elec. Adjustable Output (to 15%)~~	~~110~~	~~Tandem wired~~
~~4~~	~~F40T10/EO~~	~~2~~	~~ELECT AO~~	~~Elec. Adjustable Output (to 15%)~~	~~146~~	~~(2) Two-lamp ballasts~~
~~2~~	~~F40T10/EO~~	~~1~~	~~ELECT DIM~~	~~Electronic Dimming (to 1%)~~	~~85~~	
~~3~~	~~F40T10/EO~~	~~1.5~~	~~ELECT DIM~~	~~Electronic Dimming (to 1%)~~	~~128~~	~~Tandem wired~~
~~4~~	~~F40T10/EO~~	~~2~~	~~ELECT DIM~~	~~Electronic Dimming (to 1%)~~	~~170~~	~~(2) Two-lamp ballasts~~

~~LUMINAIRE POWER~~ ~~Table B-101~~

~~Lamp~~	~~Ballast~~	~~Watts/~~	

~~No.~~	~~Designation~~	~~No.~~	~~Abbreviation~~	~~Description~~	~~Luminaire~~	~~Comments~~
[redacted]						
~~8 foot Fluorescent Rapid Start High Output Energy-Saving (86W)~~						
~~2~~	~~F96T8/HO~~	~~1~~	~~ELECT~~	~~Electronic~~	~~160~~	
~~8 foot Fluorescent Rapid Start High Output Energy-Saving (95W)~~						
~~1~~	~~F96T12/HO/ES~~	~~1~~	~~MAG STD~~	~~Magnetic Standard~~	~~125~~	
~~2~~	~~F96T12/HO/ES~~	~~1~~	~~MAG STD**~~	~~Magnetic Standard~~	~~227~~	
~~2~~	~~F96T12/HO/ES~~	~~1~~	~~MAG EE~~	~~Magnetic Energy Efficient~~	~~208~~	
~~4~~	~~F96T12/HO/ES~~	~~2~~	~~MAG EE~~	~~Magnetic Energy Efficient~~	~~416~~	~~(2) Two-lamp ballasts~~
~~2~~	~~F96T12/HO/ES~~	~~1~~	~~ELECT~~	~~Electronic~~	~~160~~	
~~4~~	~~F96T12/HO/ES~~	~~2~~	~~ELECT~~	~~Electronic~~	~~320~~	~~(2) Two-lamp ballasts~~
~~8 foot Fluorescent Rapid Start High Output (110W)~~						
~~1~~	~~F96T12/HO~~	~~1~~	~~MAG STD~~	~~Magnetic Standard~~	~~140~~	
~~2~~	~~F96T12/HO~~	~~1~~	~~MAG STD**~~	~~Magnetic Standard~~	~~252~~	
~~2~~	~~F96T12/HO~~	~~1~~	~~MAG EE~~	~~Magnetic Energy Efficient~~	~~237~~	
~~4~~	~~F96T12/HO~~	~~2~~	~~MAG EE~~	~~Magnetic Energy Efficient~~	~~474~~	~~(2) Two-lamp ballasts~~
~~2~~	~~F96T12/HO~~	~~1~~	~~ELECT~~	~~Electronic~~	~~190~~	
~~4~~	~~F96T12/HO~~	~~2~~	~~ELECT~~	~~Electronic~~	~~380~~	~~(2) Two-lamp ballasts~~
[redacted]						
~~8 foot Fluorescent Rapid Start Very High Output Energy-Saving (195W)~~						
~~1~~	~~F96T12/VHO/ES~~	~~1~~	~~MAG STD~~	~~Magnetic Standard~~	~~200~~	
~~2~~	~~F96T12/VHO/ES~~	~~1~~	~~MAG STD~~	~~Magnetic Standard~~	~~325~~	
~~4~~	~~F96T12/VHO/ES~~	~~2~~	~~MAG STD~~	~~Magnetic Standard~~	~~650~~	~~(2) Two-lamp ballasts~~
~~8 foot Fluorescent Rapid Start Very High Output (215W)~~						
~~1~~	~~F96T12/VHO~~	~~1~~	~~MAG STD~~	~~Magnetic Standard~~	~~230~~	
~~2~~	~~F96T12/VHO~~	~~1~~	~~MAG STD~~	~~Magnetic Standard~~	~~440~~	
~~4~~	~~F96T12/VHO~~	~~2~~	~~MAG STD~~	~~Magnetic Standard~~	~~880~~	

~~LUMINAIRE POWER~~ ~~Table B-101~~

~~Lamp~~		~~Ballast~~			~~Watts/~~	
~~No.~~	~~Designation~~	~~No.~~	~~Abbreviation~~	~~Description~~	~~Luminaire~~	~~Comments~~
[redacted]						
~~4 foot Fluorescent Slimline Energy-Saving T12 (32W)~~						
~~1~~	~~F48T12/ES~~	~~1~~	~~MAG STD~~	~~Magnetic Standard~~	~~51~~	
~~2~~	~~F48T12/ES~~	~~1~~	~~MAG STD~~	~~Magnetic Standard~~	~~82~~	
~~4 foot Fluorescent Slimline Standard T12 (39W)~~						
~~1~~	~~F48T12~~	~~1~~	~~MAG STD~~	~~Magnetic Standard~~	~~59~~	
~~2~~	~~F48T12~~	~~1~~	~~MAG STD~~	~~Magnetic Standard~~	~~98~~	
[redacted]						
~~8 foot Fluorescent Instant Start T8 (Slimline with Rare Earth Phosphors)~~						
~~1~~	~~F96T8~~	~~1~~	~~ELECT~~	~~Electronic~~	~~71~~	
~~2~~	~~F96T8~~	~~1~~	~~ELECT~~	~~Electronic~~	~~115~~	
~~8 foot Fluorescent Slimline Energy-Saving (60W)~~						
~~1~~	~~F96T12/ES~~	~~1~~	~~MAG STD~~	~~Magnetic Standard~~	~~83~~	
~~2~~	~~F96T12/ES~~	~~1~~	~~MAG STD**~~	~~Magnetic Standard~~	~~138~~	
~~2~~	~~F96T12/ES~~	~~1~~	~~MAG EE~~	~~Magnetic Energy Efficient~~	~~123~~	
~~4~~	~~F96T12/ES~~	~~2~~	~~MAG EE~~	~~Magnetic Energy Efficient~~	~~246~~	~~(2) Two-lamp ballasts~~
~~2~~	~~F96T12/ES~~	~~1~~	~~ELECT~~	~~Electronic~~	~~105~~	
~~4~~	~~F96T12/ES~~	~~2~~	~~ELECT~~	~~Electronic~~	~~210~~	~~(2) Two-lamp ballasts~~
~~8 foot Fluorescent Slimline Standard (75W)~~						
~~1~~	~~F96T12~~	~~1~~	~~MAG STD~~	~~Magnetic Standard~~	~~100~~	
~~2~~	~~F96T12~~	~~1~~	~~MAG STD**~~	~~Magnetic Standard~~	~~173~~	
~~2~~	~~F96T12~~	~~1~~	~~MAG EE~~	~~Magnetic Energy Efficient~~	~~158~~	
~~4~~	~~F96T12~~	~~2~~	~~MAG EE~~	~~Magnetic Energy Efficient~~	~~316~~	~~(2) Two-lamp ballasts~~
~~2~~	~~F96T12~~	~~1~~	~~ELECT~~	~~Electronic~~	~~130~~	
~~4~~	~~F96T12~~	~~2~~	~~ELECT~~	~~Electronic~~	~~260~~	~~(2) Two-lamp ballasts~~

~~2~~	~~F96T12~~	~~1~~	~~ELECT IS~~	~~Electronic Instant Start~~	~~130~~	
~~3~~	~~F96T12~~	~~1.5~~	~~ELECT IS~~	~~Electronic Instant Start~~	~~195~~	~~Tandem wired~~
~~4~~	~~F96T12~~	~~2~~	~~ELECT IS~~	~~Electronic Instant Start~~	~~260~~	~~(2) Two-lamp ballasts~~

~~LUMINAIRE POWER~~

~~Table B-101~~

~~Lamp~~		~~Ballast~~			~~Watts/~~	
~~No.~~	~~Designation~~	~~No.~~	~~Abbreviation~~	~~Description~~	~~Luminaire~~	~~Comments~~
~~Mercury Vapor~~						
~~1~~	~~MV40~~	~~1~~	~~MAG STD~~	~~Magnetic Standard~~	~~51~~	
~~1~~	~~MV50~~	~~1~~	~~MAG STD~~	~~Magnetic Standard~~	~~63~~	
~~1~~	~~MV75~~	~~1~~	~~MAG STD~~	~~Magnetic Standard~~	~~88~~	
~~1~~	~~MV100~~	~~1~~	~~MAG STD~~	~~Magnetic Standard~~	~~119~~	
~~1~~	~~MV175~~	~~1~~	~~MAG STD~~	~~Magnetic Standard~~	~~197~~	
~~1~~	~~MV250~~	~~1~~	~~MAG STD~~	~~Magnetic Standard~~	~~285~~	
~~1~~	~~MV400~~	~~1~~	~~MAG STD~~	~~Magnetic Standard~~	~~450~~	
~~1~~	~~MV1000~~	~~1~~	~~MAG STD~~	~~Magnetic Standard~~	~~1080~~	
~~Metal Halide~~						
~~1~~	~~MH32~~	~~1~~	~~MAG STD~~	~~Magnetic Standard~~	~~42~~	
~~1~~	~~MH70~~	~~1~~	~~MAG STD~~	~~Magnetic Standard~~	~~95~~	
~~1~~	~~MH100~~	~~1~~	~~MAG STD~~	~~Magnetic Standard~~	~~142~~	
~~1~~	~~MH175~~	~~1~~	~~MAG STD~~	~~Magnetic Standard~~	~~210~~	
~~1~~	~~MH250~~	~~1~~	~~MAG STD~~	~~Magnetic Standard~~	~~295~~	
~~1~~	~~MH400~~	~~1~~	~~MAG STD~~	~~Magnetic Standard~~	~~461~~	
~~1~~	~~MH1000~~	~~1~~	~~MAG STD~~	~~Magnetic Standard~~	~~1080~~	
~~High Pressure Sodium~~						
~~1~~	~~HPS35~~	~~1~~	~~MAG STD~~	~~Magnetic Standard~~	~~44~~	
~~1~~	~~HPS50~~	~~1~~	~~MAG STD~~	~~Magnetic Standard~~	~~61~~	
~~1~~	~~HPS70~~	~~1~~	~~MAG STD~~	~~Magnetic Standard~~	~~93~~	
~~1~~	~~HPS100~~	~~1~~	~~MAG STD~~	~~Magnetic Standard~~	~~116~~	

1	HPS150	1	MAG STD	Magnetic Standard	173
1	HPS200	1	MAG STD	Magnetic Standard	240
1	HPS250	1	MAG STD	Magnetic Standard	302
1	HPS400	1	MAG STD	Magnetic Standard	469
1	HPS1000	1	MAG STD	Magnetic Standard	1090
Low Pressure Sodium					
1	LPS18	1	MAG STD	Magnetic Standard	30
1	LPS35	1	MAG STD	Magnetic Standard	60
1	LPS55	1	MAG STD	Magnetic Standard	80
1	LPS90	1	MAG STD	Magnetic Standard	125
1	LPS135	1	MAG STD	Magnetic Standard	178
1	LPS180	1	MAG STD	Magnetic Standard	220

LUMINAIRE POWER Table B-101

Lamp		Ballast			Watts/	
No.	Designation	No.	Abbreviation	Description	Luminaire	Comments
[redacted]						
12 Volt Tungsten Halogen, MR 16 & Electronic Transformer						
1	Q20MR16(12V)	1	ELECT	Electronic	23	
1	Q35MR16(12V)	1	ELECT	Electronic	39	
1	Q50MR16(12V)	1	ELECT	Electronic	55	
1	Q70MR16(12V)	1	ELECT	Electronic	78	

* US Energy Policy Act of 1992 affect on lamps

Beginning in April 1994, many common wattage lamp types can no longer be manufactured or imported into the U.S. Federal Energy Legislation has decreed that these lamp types must be eliminated to reduce energy consumption. Lamp Types affected include the following fluorescent lamps:

Fluorescent Lamps		F40U/3	Cool White	F96T12/	W
F40	CW	F40U/3	Warm White	F96T12/	WW

~~F40~~	~~D~~	~~F40U/6~~	~~Cool White~~	~~F96T12/~~	~~WWX~~
~~F40~~	~~D/WM~~	~~F40U/6~~	~~Warm White Deluxe~~	~~F96T12/~~	~~WWX/WM~~
~~F40~~	~~W~~	~~F40U/6~~	~~Warm White~~	~~F96T12/~~	~~HO/D~~
~~F40~~	~~WW~~	~~F96T12/~~	~~CW~~	~~F96T12/~~	~~HO/CW~~
~~F40~~	~~WWX~~	~~F96T12/~~	~~D~~	~~F96T12/~~	~~HO/W~~
~~F40~~	~~WWX/WM~~	~~F96T12/~~	~~D/WM~~	~~F96T12/~~	~~HO/WW~~

~~Incandescent PAR Lamps~~		~~Inc. Reflector Lamps~~	
~~75PAR38~~	~~150PAR38~~	~~75R40~~	~~200R40~~
~~75/65PAR38~~	~~150/120PAR38~~	~~75R30~~	
~~100/80PAR38~~		~~150R40~~	
~~100 PAR38~~		~~100R40~~	

~~** US National Appliance Energy Conservation Act of 1988 affect on ballasts~~

~~In 1991 using the following Standard Magnetic ballasts was not permitted in the US.~~

~~-Single and two-lamp ballasts for 4' T12 Rapid Start Lamps, 120V & 277V 60Hz~~

~~-Two-lamp ballasts for 8' T-12 Slimline lamps~~

~~-Two-lamp ballasts for 8' T12 high-output rapid start lamps~~

ACM NC-2005

Appendix NC - Fan Motor Efficiencies

Table NC-1 Fan Motor Efficiencies (< 1 HP)

Nameplate or Brake Horsepower	Standard Fan Motor Efficiency	NEMA* High Efficiency	Premium Efficiency
1/20	40%	...	...
1/12	49%	...	...
1/8	55%	...	...
1/6	60%	...	...
1/4	64%	...	...
1/3	66%	...	...
1/2	70%	76.0%	80.0%
3/4	72%	77.0%	84.0%

*NOTE: For default drive efficiencies, s~~S~~ee Table N2-17.~~Section 4.2.2~~

*NEMA - Proposed standard using test procedures.

Minimum NEMA efficiency per test IEEE 112b Rating Method.

Table NC-2 Fan Motor Efficiencies (1 HP and over)

	Open Motors				Enclosed Motors			
Motor Horsepower	2 pole 3600 rpm	4 pole 1800 rpm	6 pole 1200 rpm	8 pole 900 rpm	2 pole 3600 rpm	4 pole 1800 rpm	6 pole 1200 rpm	8 pole 900 rpm
1	—	82.5	80.0	74.0	75.5	82.5	80.0	74.0
1.5	82.5	84.0	84.0	75.5	82.5	84.0	85.5	77.0
2	84.0	84.0	85.5	85.5	84.0	84.0	86.5	82.5
3	84.0	86.5	86.5	86.5	85.5	87.5	87.5	84.0
5	85.5	87.5	87.5	87.5	87.5	87.5	87.5	85.5
7.5	87.5	88.5	88.5	88.5	88.5	89.5	89.5	85.5
10	88.5	89.5	90.2	89.5	89.5	89.5	89.5	88.5
15	89.5	91.0	92.0	89.5	90.2	91.0	90.2	88.5
20	90.2	91.0	91.0	90.2	90.2	91.0	90.2	89.5
25	91.0	91.7	91.7	90.2	91.0	92.4	91.7	89.5
30	91.0	92.4	92.4	91.0	91.0	92.4	91.7	91.0
40	91.7	93.0	93.0	91.0	91.7	93.0	93.0	91.0
50	92.4	93.0	93.0	91.7	92.4	93.0	93.0	91.7
60	93.0	93.6	93.6	92.4	93.0	93.6	93.6	91.7
75	93.0	94.1	93.6	93.6	93.0	94.1	93.6	93.0
100	93.0	94.1	94.1	93.6	93.6	94.5	94.1	93.0
125	93.6	94.5	94.1	93.6	94.5	94.5	94.1	93.6
150	93.6	95.0	94.5	93.6	94.5	95.0	95.0	93.6
200	94.5	95.0	94.5	93.6	95.0	95.0	95.0	94.1
250	94.5	95.0	95.4	94.5	95.4	95.0	95.0	94.5
300	95.0	95.4	95.4	—	95.4	95.4	95.0	—
350	95.0	95.4	95.4	—	95.4	95.4	95.0	—
400	95.4	95.4	—	—	95.4	95.4	—	—
450	95.8	95.8	—	—	95.4	95.4	—	—
500	95.8	95.8	—	—	95.4	95.8	—	—

~~Appendix C:~~

~~Reference Weather/Climate Data~~

~~Appendix C: Reference Weather/Climate Data~~

~~*C.1 Weather Data - General*~~

~~All energy budget calculations for compliance runs use a form of the weather data in the Commission's official sixteen (16) climate zone hourly weather files. The reference method uses a form of this data that is adjusted for local ASHRAE design data extremes. These files are available from the Commission in the WYEC2 (Weather Year for Energy Calculations) format recognized by ASHRAE and in DOE 2.1E packed weather data format. The reference method computer program for adjusting the climate zone weather data for local ASHRAE design data is also available from the Commission. Temperatures in the WYEC2 files for the sixteen climate zones have been adjusted to the average means and extremes of the weather data of the reliable substations in each climate zone. See *Climate Zone Weather Data Analysis and Revision Project*, Final Consultant Report, CEC Publication # P400-92-004, for more detail.~~

~~The WYEC2 data may be adjusted for local conditions, condensed, statistically summarized or otherwise reduced, as long as:~~

~~a) The weather data used to derive the simplified or reduced data is the Commission's official hourly weather data; and,~~

~~b) The ACM program meets all of the certification tests using the reduced weather data.~~

~~Whatever weather data and/or weather data reduction methods are used, approval of the ACM for compliance purposes with the standards is contingent upon the fact that approved weather data will be used for all compliance runs. The Commission must be able to verify that the proper weather data is being used by building permit applicants.~~

~~The official weather data for energy compliance is available from the Commission in a form suitable for 3.5" high density IBM PC-formatted diskettes. There are 16 climate zones, each with an 8760 hourly records containing raw data on a variety of ambient conditions such as:~~

~~? Dry bulb temperature~~

~~? Wet bulb temperature~~

~~? Wind speed and direction~~

~~? Direct solar radiation~~

~~? Diffuse radiation~~

~~Each climate zone file includes the non-temperature data of a particular city whose annual climate data has been judged representative of the construction locations within that zone. The values listed by climate zone~~

~~and the nominal city location for each climate zone in Table C-1 in this section, Section C.1, must be used for any given climate zone if the ACM does not automatically make local city weather adjustments to the files.~~

~~As indicated above the reference method uses local city ASHRAE design data to adjust the climate zone weather data. These adjustments customize the temperature data, especially the extremes, to conform to the ASHRAE design data statistics for the city in question. This makes the HVAC sizing and energy calculations more realistic for energy compliance simulations.~~

~~*Table C-1: California Climate Zone Summary*~~

Climate Zone	City	Latitude	Longitude	Elevation
1	Arcata	40.8	124.2	43
2	Santa Rosa	38.4	122.7	164
3	Oakland	37.7	122.2	6
4	Sunnyvale	37.4	122.4	97
5	Santa Maria	34.9	120.4	236
6	Los Angeles AP	33.9	118.5	97
7	San Diego	32.7	117.2	13
8	El Toro	33.6	117.7	383
9	Burbank	34.2	118.4	655
10	Riverside	33.9	117.2	1543
11	Red Bluff	40.2	122.2	342
12	Sacramento	38.5	121.5	17
13	Fresno	36.8	119.7	328
14	China Lake	35.7	117.7	2293
15	El Centro	32.8	115.6	-30
16	Mt. Shasta	41.3	122.3	3544

~~C.2 WYEC2 Climate/Weather Data Format~~

~~The ASCII versions of the WYEC2 weather files consist of 8760 identical fixed format records, one for each hour of a 365 day year. Each record is 116 characters in length and is organized according to the format shown in Table C-2 which follows.~~

~~The WYEC2 format is derived from the NOAA TD-9734 Typical Metteorological Year (TMY) format in that WYEC2 uses the same field encoding and units as TMY. However, it should be noted that ***all WYEC2 values are for Local Standard Time.*** That is, WYEC2 data should be read sequentially and used with no conversion (except any required unit conversions). This is in marked contrast to the TMY files which contain solar data for Apparent Solar Time and meteorological data for Local Standard Time.~~

~~Irradiance and illuminance fields contain data integrated over the hour, meteorological fields contain observations made at the end of the hour. For example, hour 12 contains irradiance/illuminance integrated from 11-12 and meteorological observations made at 12.~~

~~Table C-2~~

~~WYEC DATA FORMAT~~

~~TABLE C-2~~

~~WYEC2 DATA FORMAT~~

~~Field Number~~	~~Data Positions~~	~~Flag Position (see notes)~~	~~Data Element and Description~~
~~001~~	~~001-005~~	~~--~~	~~WBAN station identification number~~ ~~Unique number to identify each station~~ ~~California compliance files contain 00001 - 00016 in this field to indicate the~~ ~~climate zone~~
~~002~~	~~006-006~~	~~--~~	~~File source code~~ ~~W = WYEC~~ ~~T = TMY~~ ~~C = California Compliance~~

~~003~~	~~007-014~~	~~--~~	~~Time, Yr Mo Day Hr (2 chars each)~~ ~~Yr omits the "19" and indicates the source year for the data, i.e.,~~ ~~00 = 1900, 99 = 1999. Data within a single WYEC2 file may have been observed in more than one year.~~ ~~Mo is 1 to 12.~~ ~~Day is 1 to month length (28, 30, or 31).~~ ~~Hr is 1 to 24.~~
~~101~~	~~015-018~~	~~--~~	~~Extraterrestrial irradiance, kJ/m^2~~ ~~Amount of solar energy received at top of atmosphere during solar hour ending at time indicated in field 003, based on solar constant of 1367 kJ/m^2.~~ ~~Nightime values are shown as 0.~~
~~102~~	~~019-022~~	~~023-024~~	~~Global horizontal irradiance, kJ/m^2~~ ~~Total of direct and diffuse radiant energy received on a horizontal surface by a pyranometer during the hour ending at the time indicated in field 003.~~
~~103~~	~~025-028~~	~~029-030~~	~~Direct normal irradiance, kJ/m^2~~ ~~Portion of the radiant energy received at the pyrheliometer directly from the sun during the hour ending at the time indicated in field 003.~~
~~104~~	~~031-034~~	~~035-036~~	~~Diffuse horizontal irradiance, kJ/m^2~~ ~~Amount of radiant energy in kJ/m2 received at the instrument indirectly from the sky during the hour ending at the time indicated in field 003.~~
~~105~~	~~037-040~~	~~041~~	~~Global horizontal illuminance, lux * 100~~
~~106~~	~~042-045~~	~~046~~	~~Direct normal illu minance, lux * 100~~
~~107~~	~~047-050~~	~~051~~	~~Diffuse horizontal illuminance, lux * 100~~
~~108~~	~~052-055~~	~~056~~	~~Zenith luminance, Cd/m^2 * 100~~

~~110~~	~~057-058~~	~~059~~	~~Minutes of sunshine, 0 - 60 minutes~~
~~201~~	~~060-063~~	~~064~~	~~Ceiling Height, m * 10~~ ~~Ceiling is defined as opaque sky cover of 0.6 or greater.~~ ~~0000 - 3000 = 0 to 30,000 m~~ ~~7777 = unlimited; clear~~ ~~8888 = unknown height of cirroform ceiling~~
~~202~~	~~065-068~~	~~069~~	~~Sky Condition~~ ~~All observations assumed to be made after 1 June 1951. ("indicator" at position 77 in TMY is omitted).~~ ~~Coded by layer in acending order; four layers are described; if less than 4 layers are present the remaining positions are coded 0. The code for each layer is:~~ ~~0 = Clear of less than 0.1 cover~~ ~~1 = Thin scattered (0.1 - 0.5 cover)~~ ~~2 = Opaque scattered (0.1 - 0.5 cover)~~ ~~3 = Thin broken (0.6 - 0.9 cover)~~ ~~4 = Opaque broken (0.6 - 0.9 cover)~~ ~~5 = Thin overcast (1.0 cover)~~ ~~6 = Opaque overcast (1.0 cover)~~ ~~7 = Obscuration~~ ~~8 = Partial obscuration~~

~~203~~	~~070-073~~	~~074~~	~~Visibility, m * 100~~ ~~Prevailing horizontal visibility.~~ ~~0000-1600 = 0 to 160 kilometers~~ ~~8888 = unlimited~~
~~204~~ ~~204 (cont.)~~	~~075-082~~ ~~075~~	~~083~~	~~Weather~~ ~~Eight single digit codes as follows:~~ ~~Occurrence of thunderstorm, tornado or squall.~~ ~~0 = None~~ ~~1 = Thunderstorm - lightning and thunder. Wind gusts less than 50 knots, and hail, if any, less than 3/4 inch diameter.~~ ~~2 = Heavy or severe thunderstorm - frequent intense lightning and thunder.Wind gusts 50 knots or greater and hail, if any, 3/4 inch or greater diameter.~~ ~~3 = Report of tornado or waterspout.~~ ~~4 = Squall (sudden increase of wind speed by at least 16 knots, reach 22 knots or more and lasting for at least one minute).~~
~~204 (cont.)~~	~~076~~		~~Occurrence of rain, rain showers or freezing rain:~~ ~~0 = None~~ ~~1 = Light rain~~ ~~2 = Moderate rain~~ ~~3 = Heavy rain~~ ~~4 = Light rain showers~~

			~~5 = Moderate rain showers~~ ~~6 = Heavy rain showers~~ ~~7 = Light freezing rain~~ ~~8 = Moderate or heavy freezing rain~~
~~204 (cont.)~~	~~077~~		~~Occurrence of drizzle, freezing drizzle~~ ~~0 = None~~ ~~1 = Light drizzle~~ ~~2 = Moderate drizzle~~ ~~3 = Heavy drizzle~~ ~~4 = Light freezing drizzle~~ ~~5 = Moderate freezing drizzle~~ ~~6 = Heavy freezing drizzle~~
~~204 (cont.)~~	~~078~~		~~Occurrence of snow, snow pellets or ice crystals~~ ~~0 = None~~ ~~1 = Light snow~~ ~~2 = Moderate snow~~ ~~3 = Heavy snow~~ ~~4 = Light snow pellets~~ ~~5 = Moderate snow pellets~~

			~~6 = Heavy snow pellets~~ ~~7 = Light ice crystals~~ ~~8 = Moderate ice crystals~~ ~~Beginning April 1963 intensities of ice crystals were discontinued. All occurrences since this date are recorded as an 8.~~
~~204 (cont.)~~	~~079~~		~~Occurence of snow showers or snow grains~~ ~~0 = None~~ ~~1 = Light snow showers~~ ~~2 = Moderate snow showers~~ ~~3 = Heavy snow showers~~ ~~4 = Light snow grains~~ ~~5 = Moderate snow grains~~ ~~6 = Heavy snow grains~~ ~~Beginning April 1963 intensities of snow grains were discontinued. All occurrences since this date are recorded as a 5.~~

~~204 (cont.)~~	~~080~~		~~Occurence of sleet (ice pellets), sleet showers or hail~~ ~~0 = None~~ ~~1 = Light sleet or sleet showers (ice pellets)~~ ~~2 = Moderate sleet or sleet showers (ice pellets)~~ ~~3 = Heavy sleet or sleet showers (ice pellets)~~ ~~4 = Light hail~~ ~~5 = Moderate hail~~ ~~6 = Heavy hail~~ ~~7 = Light small hail~~ ~~8 = Moderate or heavy small hail~~ ~~Prior to April 1970 ice pellets were coded as sleet. Beginning April 1970 sleet and small hail were redefined as ice pellets and are coded as a 1, 2, or 3 in this position. Beginning September 1956 intensities of hail were no longer reported and all occurrences were recorded as a 5.~~
~~204 (cont.)~~	~~081~~		~~Occurrence of fog, blowing dust or blowing sand~~ ~~0 = None~~ ~~1 = Fog~~ ~~2 = Ice Fog~~ ~~3 = Ground Fog~~ ~~4 = Blowing dust~~ ~~5 = Blowing sand~~

			~~These values recorded only when visibility less than 7 miles.~~
~~204 (cont.)~~	~~082~~		~~Occurrence of smoke, haze, dust, blowing snow or blowing spray:~~ ~~0 = None~~ ~~1 = Smoke~~ ~~2 = Haze~~ ~~3 = Smoke and haze~~ ~~4 = Dust~~ ~~5 = Blowing snow~~ ~~6 = Blowing spray~~ ~~These values recorded only when visibility less than 7 miles.~~

~~205~~	~~084-088~~	~~089~~	~~Station pressure, kilopascals (kPa) * 100~~ ~~Pressure at station level~~ ~~08000 - 10999 = 80 to 109.99 kPa.~~
~~206~~	~~090-093~~	~~094~~	~~Dry bulb temperature, °C * 10~~ ~~-700 to 0600 = -70.0 to +60.0 °C~~
~~207~~	~~095-098~~	~~099~~	~~Dew point, °C * 10~~ ~~-700 to 0600 = -70.0 to +60.0 °C~~
~~208~~	~~100-102~~	~~103~~	~~Wind direction, 0 - 359 degrees~~ ~~0 = north~~ ~~Note TMY range is 0-360, WYEC2 has recoded 360 as 0.~~
~~209~~	~~104-107~~	~~108~~	~~Wind speed, m/s * 10~~ ~~0 - 1500 = 0 to 150.0 m/s.~~ ~~Wind speed and wind direction both 0 indicates calm.~~
~~210~~	~~109-110~~	~~111~~	~~Total Sky Cover, 0 - 10 in tenths~~ ~~Amount of celestial dome in tenths covered by clouds or obscuring phenomena.~~
~~211~~	~~112-113~~	~~114~~	~~Opaque Sky Cover, 0 - 10 in tenths~~ ~~Amount of celestial dome in tenths covered by clouds or obscuration through~~ ~~which the sky and/or higher cloud layers cannot be seen.~~
~~212~~	~~115-115~~	~~116~~	~~Snow Cover~~ ~~0 = no snow or a trace of snow~~ ~~1 = indicates more than a trace of snow on the ground~~

~~Notes for Table C-2 - WYEC2 Format:~~

~~1.Total file size (including CRLFs) = 118 x 8,760 = 1,033,680 characters.~~

~~2.Flag characters indicate the source of the associated value and, in the case of solar fields, optionally give information about the quality of the value.~~

~~Some fields have no flag, others have 1 or 2 character flags as follows:~~

~~*Field*~~	~~*Flag type / comment*~~
~~001 - 003~~	~~None (record identification fields)~~
~~101~~	~~None (calculated extraterrestrial irradiance is always present)~~
~~102 - 1042~~	~~character (irradiance values)~~
~~105 - 2121~~	~~character (all remaining fields)~~

~~One character flags are alphabetic (with the exception of 9 for missing) and are defined as follows:~~

~~(blank)~~	~~Value was observed (that is, not derived with a model and not altered.)~~
~~A~~	~~Value has been algorithmically adjusted (e.g., dry bulb temperatures were shifted to match long term means).~~
~~E~~	~~Value was missing and has been replaced by a hand estimate.~~
~~F~~	~~Value was bad and has been replaced by a hand estimate.~~
~~I~~	~~Value was missing and has been replaced with one derived by interpolation fromneighboring observations.~~
~~J~~	~~Value was bad and has been replaced with one derived by interpolation from neighboring observations.~~
~~M~~	~~Value was missing and has been replaced with one derived with a model (modelused depends on element).~~

~~N Value was bad and has been replaced with one derived with a model (model useddepends on element).~~

~~P Value violated a physical limit and has been replaced by that limit.~~

~~Q Value is derived from other values (e.g., illuminance data which were not observed).~~

~~9 Value is missing; data positions contain 9s as well.~~

~~Two character flags (on irradiance fields 102, 103, and 104) are *either*:~~

~~A 1 character flag (as defined above) followed by a blank, or~~

~~A 2 character numeric value in the range 00 to 99 and are defined in *SERI Standard Broadband Format 2*, as follows:~~

~~00 Element is untested (original data)~~

~~01-03 Element passed tests on physical limits, model limits (for tolerances less than 3%), and reasonable coupling to other parameters (for tolerances less than 3%).~~

~~04 Element passed hand/eye tests.~~

~~05 Element failed hand/eye tests and has not been corrected.~~

~~06 Element was missing and has not been replaced with an estimate.~~

~~07 Element's value is lower than a physical limit.~~

~~08 Element's value is higher than a physical limit.~~

~~09 Element's value is inconsistent with other components (e.g. direct not consistent with global)~~

~~10-93 Element exceeded the 3% tolerance in one of four ways. The following error types are defined:~~

~~0 = too low by 3-parameter coupling~~

~~1 = too high by 3-parameter coupling~~

~~2 = too low by 2D boundary comparison~~

~~3 = too high by 2D boundary caparison~~

~~The flags in this range are constructed in such a way that both the percentage of error and the type of error are encoded in the two digit flag. To create the flag, one multiplies the percentage of disagreement by 4, subtract 2, and add the error type. The percentage of error should be truncated - only the integer part is used.~~

~~The particular error is determined by the remainder of MOD(IQC=2 / 4), where "MOD0 is a mathematical function representing the remainder of the quantity (IQC+2)/4 and "IQC" is the two digit flag number. The percentage error is determined by~~

~~IPCT = Int((IQC + 2) /4)~~

~~IPCT = 23 indicates an error greater than 23%.~~

~~94-97 KN = KT + ERR~~

~~***FLAG ERR***~~

~~94 5% ETR <= ERR <10% ETR~~

~~95 10% ETR <= ERR <15% ETR~~

~~96 15% ETR <= ERR < 20% ETR~~

~~97 20% ETR <= ERR~~

~~99 Element is missing or null.~~

~~It should be noted that the 2 character numeric flags are appropriate for encoding the results of quality control processing of archival solar data. The 1 character alphabetic flags are appropriate for "best estimate" data sets in which any questionable values have been replaced. most WYEC2 files used for engineering purposes will fall into the latter category and will thus use the alphabetic flags on solar fields.~~

~~3. Missing elements are 9 filled: all data and flag positions contain 9s.~~

~~4. Conversion factors relevant to WYEC2 use:~~

To convert from	***to***	***multiply by***
~~kj/m2~~	~~Btu/ft2~~	~~0.08807~~
~~m/s * 10~~	~~mph~~	~~0.2273~~
~~kPai~~	~~n. Hg.~~	~~0.002953~~
~~m * 10~~	~~ft~~	~~32.808~~
~~m * 100 miles~~	~~miles~~	~~0.06214~~

~~C.3 Climate/Weather Data Adjustments for Local Conditions~~

~~This appendix section describes the official procedure used by the California Energy Commission to adjust the Title 24 climate zone data for the sixteen (16) climate zones to match the ASHRAE design day conditions for a specific city.[1] Computer software available from the California Energy Commission takes weather data from one of the sixteen climate zones and uses ASHRAE design data for a specific city within that climate zone to create weather data in the format required by the DOE-2 building simulation program.[2] The generated weather data has the latitude, longitude, elevation and air properties of a particular city instead of the climate zone's designated weather station indicated in Table D-3. This procedure only modifies the weather data on the climate zone data file to match a city's design conditions for the days which fall within the ASHRAE summer and winter design day percentage levels. However, the entire data set is adjusted to reflect the city's elevation. This city-specific data into DOE-2 allows the program's Heating Ventilation and Air-Conditioning (HVAC) sizing procedures to use design conditions closer to the simulated building's actual location. This section outlines the procedure used to incorporate a city's design day data into an hourly climate zone data set.~~

~~BACKGROUND~~

~~The California Energy Commission, in developing and implementing the Title 24 building energy efficiency standards, has defined sixteen zones that encompass the diversity of California's climatic regions. Each climate zone's hourly weather data set has been derived, predominantly, from a single weather station. Past work sponsored by the Commission modified these data sets to reflect the weather conditions of specific geographic areas within certain climate zones where high levels of building construction were anticipated. This modified Title 24 climate zone data, however, does not represent the particular climatic conditions of any individual city or a specific building site but rather the climate zone as a whole. The weather adjustments described below are intended to increase a compliance program's ability to properly size and simulate HVAC systems.~~

~~DEFINITIONS~~

~~CITY One of the California cities listed in ASHRAE's CLIMATIC DATA FOR REGION X~~

~~TAPE Hourly data which describes the regional weather patterns for one of the 16 California mate zones~~

~~RH Relative Humidity (%)~~

~~DB Dry Bulb temperature (°F)~~

~~WB Wet Bulb temperature (°F)~~

~~P Pressure (psia)~~

~~MIN Minimum Daily Dry Bulb Temperature (°F)~~

~~MAXMaximum Daily Dry Bulb Temperature (°F)~~

~~AVG Average Daily Dry Bulb Temperature (°F)~~

~~=MAX - MIN) / 2~~

~~RANGE Daily Dry Bulb Temperature Range (°F)~~

~~= (MAX - MIN)~~

~~RH_RATIO The Daily Ratio of RH_{MAX} for the CITY to RH_{MAX} for the TAPE~~

~~ODR Outdoor Daily Range (°F) as defined by ASHRAE: the difference between the average maximum and average minimum temperature for the warmest month~~

~~F An hourly temperature function derived from the TAPE~~

~~= (DB_{HR} - AVG) / RANGE~~

~~METHODOLOGY~~

~~First, the climate zone design conditions as specified by ASHRAE are computed from the TAPE. The maximum DB is also found off the TAPE. The CITY maximum DB is computed as:~~

$$CITY_{max\ DB} = TAPE_{max\ DB} * CITY_{0.1\%\ DB} / TAPE_{0.1\%\ DB}. \qquad [1]$$

~~The psychrometric equations are used to derive RH for the TAPE design conditions[3]. The atmospheric pressure is adjusted for the CITY elevation, then RH is computed for the CITY design conditions. The form of equation [1] is used to derive the CITY maximum RH, using the TAPE maximum RH and the RH values computed for the TAPE and the CITY at the 0.1% DB conditions.~~

~~For each day of the year the following steps are completed:~~

~~1.MAX, Min, AVG, RAGE, WB_{MAX} and RH_{MAX} are determined for the TAPE,~~

~~2.A mapping procedure, delineated in Figure 1, is used to find RH_{MAX} for the CITY from the CITY RH design values, the TAPE DB design values and MAX for the TAPE,~~

~~3.RH_{MAX} and RH RATIO are determined for the CITY. The RH RATIO is set to 1 for all days with MAX less than the CITY 2.0% maximum DB, which equates the RH of the CITY to the RH of the TAPE for all non-design days,~~

~~4.MAX and MIN for the CITY are computed using mapping procedures similar to that illustrated in Figure 1, from the CITY DB design conditions, the TAPE DB design conditions and MAX/MIN for the TAPE,~~

~~5.MAX and MIN for the CITY are corrected for the CITY elevation[4],~~

~~6.RANGE is calculated for the CITY. RANGE is adjusted by the ratio of the ODR for the CITY to the ODR of the TAPE if MAX is greater then the CITY 2.0% maximum DB,~~

~~7.AVG for the CITY is calculated in one of three ways:~~

~~(a) AVG = MAX -5.0* RANGE,~~
~~if MAX > CITY 2.0% maximum DB, or~~
~~(b) AVG = MIN + 0.5* RANGE,~~
~~if MIN < CITY 0.6% minimum DB, or~~
~~(c) AVG = (MAX + MIN) / 2.~~

~~Once the daily CITY statistics are computed, they can be applied to the hourly TAPE to generate an hourly CITY weather data set. For each hour of the year, the following steps are completed.~~

~~1.F is calculated from the Tape,~~

~~2.P is corrected for CITY elevation,~~

~~3.RH is calculated for the TAPE,~~

~~4.RH for the CITY is derived by applying the RH RATIO to the RH for the TAPE,~~

~~5.DB for the CITY is computed: DB = AVG + F * RANGE,~~

~~6.WB is calculated using the new values for RH, DB and P for the CITY.~~

~~Upon completion of all weather adjustments the resulting data set is converted to the binary format required by the DOE-2 simulation program.~~

~~RESULTS~~

~~An example of the hourly weather adjustments from a TAPE to a CITY is displayed in figure 2. Four summer days are extracted from both the cimate zone 16 data (Mt. Shasta) and the city-specific data (Tahoe City). The first day plotted falls below the design day threshold; the next three days plotted are design days. The figure depicts the expected downshift of hourly temperatures from Mt. Shasta (maximum DB = 96^{0}F) to Tahoe City (maximum DB = 87^{0}F).~~

~~SOFTWARE PACKAGE~~

~~To obtain the software used to adjust DOE-2 files to local design conditions for 641 California cities that is described in this section of Appedix D write to:~~

~~LOCAL WEATHER SOFTWARE~~

~~EFFICIENCY TECHNOLOGY OFFICE~~

~~CALIFORNIA ENERGY COMMISSION~~

~~1516 NINTH ST., MS-42~~

~~SACRAMENTO, CA 95814-5512~~

~~You must include a self-addressed, stamped diskette mailer and a preformatted 1.4~~

~~NOTES for SECTION C.3~~

1. ~~ASHRAE Publication SPCDX, CLIMATIC DATA FOR REGION X: ARIZONA, CALIFORNIA, HAWAII, NEVADA, defines a city's design day conditions as the ambient dry bulb and wet bulb temperatures which are percentage levels of hours on an annual basis: Summer values are presented for the 0.1%, 0.5% and 2.0% of the annual maximum dry bulb temperature; Winter values are presented for the median, the 0.2% and 0.6% of the annual minimum dry bulb temperature. This publication lists design day data for 641 California cities.~~

2. ~~The computer software described herein produces two output files. The first file is the hourly weather data in binary DOE-2 format. To produce this file staff has incorporated a program created by Jeff Hirsch (James J. Hirsch and Associates) which converts an ASCII data file into the packed DOE-2 file format. This~~

~~file is compatible with the DOE-2 program compiled and distributed by James J. Hirsch and Associates as well as several other PC versions of DOE-2. The second file produced is an ASCII file that contains building location data as well as specific design data required by the CEC's nonresidential Alternative Calculation Method (ACM) procedures.~~

3. ~~The mathematical equations which describe the thermodynamic properties of moist air are published in the ASHRAE HANDBOOK FUNDAMENTALS Volume, PSYCHROMETRICS Chapter. The relative humidity (RH) which corresponds to specific dry bulb and wet bulb temperatures is derived by these principles of psychrometrics throughout this weather adjustment procedure.~~

4. ~~Elevation adjustments to dry bulb temperature and pressure are made using the standard atmospheric data published in the ASHRAE FUNDAMENTALS Volume, PSYCHROMETRIC Chapter.~~

~~*C.4 California City Design Weather Data*~~

~~The data contained in the multi page Table C-3 was obtained through a joint effort by the Southern California Chapter and the Golden Gate Chapter of ASHRAE. It is reprinted here with the expressed written permission of Southern California Chapter ASHRAE, Inc.~~

~~A full listing of design weather data for California cities is contained in the ASHRAE publication ***SPCDX, Climatic Data for Region X: Arizona, California, Hawaii, Nevada*** (May, 1982). The publication may be ordered from:~~

~~Order Desk~~
~~Building News~~
~~3055 Overland Avenue~~
~~Los Angeles, CA 90034~~
~~(800) 873-6397 or (213) 202-7775~~
~~Cost: $17.50 + tax + $4.25 shipping and handling~~

~~KEY TO ABBREVIATIONS~~

~~for City Climate Design Data~~

~~Abbreviation~~	~~Meaning~~
~~AFB~~	~~Air Force Base~~
~~AFS~~	~~Air Force Station~~
~~AP~~	~~Airport~~
~~CO~~	~~City/County Office~~
~~FD~~	~~Fire Department~~
~~FS~~	~~Fire Station~~
~~MCB~~	~~Marine Corp. Base~~
~~NAS~~	~~Naval Air Station~~
~~NM~~	~~National Monument~~
~~PH~~	~~Power House~~
~~RS~~	~~Ranger Station~~

City	County	Climate Zone	Latitude	Longitude	Elevation	SUMMER							Winter Median of Extremes	HDD*
						0.1% Dry Bulb	0.1% Wet Bulb	0.5% Dry Bulb	0.5% Wet Bulb	2% Dry Bulb	2% Wet Bulb	Outdoor Daily Range		
Adelanto	San Bernardino	14	34.6		2865	105	67	101	65	97	62	39	14	
Adin RS	Modoc	16	41.20	120.95	4195	96	61	92	60	88	59	43	-7	
Agoura Hills	Los Angeles	9	34.2		700	103	70	96	68	90	66	29	27	
Alameda NAS	Alameda	3	37.79	122.32	15	88	65	82	64	76	62	21	35	2507
Alamo	Contra Costa	12	37.90	122.92	410	102	69	97	68	92	66	30	23	
Albany	Alameda	3	37.90	122.25	40	88	65	83	64	77	62	16	30	
Alderpoint	Humboldt	2	40.20	123.62	460	100	69	95	67	90	65	39	21	3424
Alhambra	Los Angeles	9	34		483	100	71	96	70	90	68	25	30	
Aliso Viejo	Orange	8	33.6		50	91	69	83	68	76	66	18	30	
Almaden AFS	Santa Clara	3	37.20	121.90	3470	95	62	90	60	85	59	20	20	4468
Alondra Park	Los Angeles	6	33.90		50	91	69	86	68	81	66	17	35	
Alpine	San Diego	10	32.79	116.77	1735	99	69	95	68	91	67	35	27	
Alta Sierra	Kern	16	35.7		6500	87	62	84	61	80	59	32	-4	
Altadena	Los Angeles	9	34.20		1200	99	68	94	67	88	66	31	32	1920
Alturas RS	Modoc	16	41.5	120.55	4400	99	62	96	61	91	59	43	-10	6895
Alum Rock	Santa Clara	4	37.40	121.83	70	95	68	90	66	84	64	22	28	
American Canyon	Napa	2	37.6		85	93	67	90	66	84	64	23	28	
Anaheim	Orange	8	33.79		158	99	69	92	68	85	67	26	32	
Anderson	Shasta	11	40.5	122.25	430	107	71	103	70	97	68	30	26	
Angwin	Napa	2	38.59	122.42	1815	98	66	93	64	88	62	33	25	
Antioch	Contra Costa	12	38	121.77	60	102	70	97	68	91	66	34	22	2627
Apple Valley	San Bernardino	14	34.5		2935	105	66	101	65	97	64	38	14	
Aptos	Santa Cruz	3	37		500	94	67	88	66	83	63	30	27	
Arcadia	Los Angeles	9	34.20		475	100	69	96	68	91	67	30	31	
Arcata	Humboldt	1	41	124.10	218	75	61	69	59	65	58	11	28	5029
Arden	Sacramento	12	38.5		80	104	70	100	69	94	67	35	28	
Arroyo Grande	San Luis Obispo	5	35.09		105	92	66	86	64	79	62	18	28	
Artesia	Los Angeles	8	33.79		50	99	71	91	70	85	68	23	33	
Arvin	Kern	13	35.20		445	106	71	102	69	98	68	30	26	
Ash Mtn	Tulare	13	36.5	118.83	1708	105	69	101	68	97	66	30	25	2703
Ashland	Alameda	3	37.7		45	92	66	86	65	81	62	24	26	
Atascadero	San Luis Obispo	4	35.5	120.70	837	94	66	89	67	84	65	42	25	
Atherton	San Mateo	3	37.5	122.23	50	90	66	84	64	78	62	27	23	
Atwater	Merced	12	37.29		150	102	72	99	70	94	67	38	24	
Auberry	Fresno	13	37.09	119.50	2140	102	69	98	67	95	64	36	21	3313
Auburn	Placer	11	38.90	121.07	1292	103	69	100	67	95	66	33	25	3089
Avalon	Los Angeles	6	33.40	118.32	25	83	64	75	62	69	60	11	37	2204
Avenal	Kings	13	36		550	103	70	98	70	93	69	34	23	
Avocado Heights	Los Angeles	16	34.2		550	101	69	97	68	91	68	30	28	
Azusa	Los Angeles	9	34.09	118.15	605	101	70	97	69	91	68	36	31	
Baker	San Bernardino	14	35.29	116.10	940	115	73	112	72	108	70	29	23	
Bakersfield AP	Kern	13	35.40	119.05	475	106	71	102	70	98	68	34	26	2185
Balch PH	San Bernardino	14	36.90		1720	100	67	97	66	93	64	26	26	
Baldwin Park	Los Angeles	9	34		394	100	69	96	69	90	68	32	31	
Banning	Riverside	15	33.90	116.88	2349	104	69	100	68	96	67	34	20	
Barrett Dam	San Diego	10	32.70	116.67	1623	103	69	97	68	92	67	35	22	2656
Barstow	San Bernardino	14	34.90	117.03	2162	107	69	104	69	100	67	35	16	2580
Baywood Los Osos	San Luis Obispo	5	35.3		100	88	65	82	64	76	62	14	31	
Beale AFB	Yuba	11	39.09	121.43	113	105	71	102	70	97	68	34	25	2835
Beaumont	Riverside	10	33.90	116.97	2605	103	68	99	67	95	66	38	22	2628

City	County	Climate Zone	Latitude	Longitude	Elevation	SUMMER							Winter Median of Extremes	HDD*
						0.1% Dry Bulb	0.1% Wet Bulb	0.5% Dry Bulb	0.5% Wet Bulb	2% Dry Bulb	2% Wet Bulb	Outdoor Daily Range		
Bell	Los Angeles	8	33.90		143	97	70	91	69	85	67	22	33	
Bell Gardens	Los Angeles	8	33.90		160	97	70	91	69	78	62	24	29	
Bellflower	Los Angeles	8	33.79		73	98	70	91	69	85	67	21	32	
Belmont	San Mateo	3	37.5		33	90	66	84	64	78	62	24	29	
Ben Lomond	Santa Cruz	3	37.09	122.10	450	92	67	85	66	79	63	30	25	
Benicia	Solano	12	38.09	122.10	55	99	69	93	67	87	65	30	28	
Berkeley	Alameda	3	37.90	122.25	345	90	64	83	63	76	61	16	33	2950
Berryessa Lake	Napa	2	38.59	122.05	480	102	70	98	69	92	67	35	26	
Beverly Hills	Los Angeles	9	34.09	118.17	268	94	69	88	68	83	66	20	39	
Big Bar RS	Trinity	16	40.79	121.80	1260	102	68	98	67	93	65	46	19	
Big Bear Lake	San Bernardino	16	34.20	116.88	6745	87	59	83	58	79	56	32	-3	6850
Bishop AP	Inyo	16	37.40	118.37	4108	103	61	100	60	97	58	40	5	4313
Blackhawk	Contra Costa	12	37.7		10	88	65	82	64	76	62	21	35	
Blackwells Corner	Kern	13	35.59	119.90	644	99	68	94	66	89	65	31	23	
Bloomington	San Bernardino	10	34		980	106	71	102	70	98	69	34	30	
Blue Canyon AP	Placer	16	39.29	120.70	5280	88	60	85	59	81	57	20	13	5704
Blythe AP	Riverside	15	33.59	114.72	395	115	74	112	73	108	71	27	28	1219
Blythe CO	Riverside	15	33.59	114.60	268	115	74	112	73	108	71	27	24	1312
Boca	Nevada	16	39.40	120.10	5575	92	58	89	57	84	55	46	-18	8340
Bodie	Mono	16	38.20	119.02	8370	83	50	80	49	76	48	42	-21	
Bonadella Ranchos –	Fresno	13	36.8		270	105	72	101	70	96	68	40	24	
Bonita	Madera	13	32.70	117.03	105	91	69	82	67	78	64	20	28	1864
Boron AFS	Kern	14	35.09	117.58	3015	106	70	103	69	98	68	35	18	3000
Borrego Desert PK	San Diego	15	33.20	116.40	805	112	76	107	74	101	72	36	25	
Bostonia	San Diego	10	32.8		600	96	70	91	69	81	67	30	29	
Boulder Creek	Santa Cruz	3	37.2		493	92	67	85	65	79	63	30	25	
Bowman Dam	Placer	11	39.40	120.65	5347	89	59	86	57	82	55	26	9	5964
Boyes Hot Sprgs	Sonoma	2	38.2		300	100	70	95	69	89	67	40	22	
Brannan Island	Sacramento	12	38.09	121.70	30	100	69	95	68	89	67	10	24	
Brawley 2 SW	Imperial	15	33	115.55	-100	113	74	110	73	105	73	32	25	1204
Brea Dam	Orange	8	33.90		275	100	69	94	68	86	66	29	30	
Brentwood	Contra Costa	12	37.9		71	102	70	97	68	89	65	34	27	
Bridgeport	Mono	16	38.20	119.22	6470	89	56	86	54	82	53	41	-20	
Broderick-Bryte	Yolo	12	38.59	121.50	20	104	71	100	69	94	67	36	25	
Brooks Ranch	Yolo	12	38.79	122.15	294	104	71	99	70	93	68	35	19	2968
Buena Park	Orange	8	33.90		75	98	69	92	68	85	67	25	31	
Burbank AP	Los Angeles	9	34.20	118.35	699	101	70	96	68	90	67	28	29	1701
Burbank Vly Pump	Los Angeles	9	34.20	118.35	655	101	69	96	68	90	66	28	29	1678
Burlingame	San Mateo	3	37.59	122.35	10	88	67	82	64	76	63	20	30	
Burney	Shasta	16	40.90	121.67	3127	95	64	92	63	88	61	42	0	6404
Butler Valley (Korbel)	Humboldt	1	40.7	123.93	420	91	66	86	64	81	62	22	20	
Buttonwillow	Kern	13	35.40	119.47	269	103	71	99	70	95	68	36	20	2621
Cabrillo NM	San Diego	7	32.70	117.23	410	89	69	84	68	80	67	12	39	
Cachuma Lake	Santa Barbara	5	34.59	119.98	781	97	69	92	67	87	65	19	26	
Calabasas	Los Angeles	9	34.20		1100	102	71	98	70	93	69	26	26	2348
Calaveras Big Trees	San Joaquin	12	38.29	120.32	4696	92	61	88	60	84	58	33	11	5848
Calexico	Imperial	15	32.70		12	114	74	110	73	106	71	28	26	
California City	Kern	14	35.1		2400	107	69	104	68	99	66	33	10	
Callahan	Siskiyou	16	41.29	122.80	3185	97	63	93	62	88	60	35	7	

City	County	Climate Zone	Latitude	Longitude	Elevation	SUMMER							Winter Median of Extremes	HDD*
						0.1% Dry Bulb	0.1% Wet Bulb	0.5% Dry Bulb	0.5% Wet Bulb	2% Dry Bulb	2% Wet Bulb	Outdoor Daily Range		
Calwa	Fresno	13	36.79		330	105	73	101	71	97	68	34	23	
Camarillo	Ventura	6	34.20	119.20	147	91	69	84	68	78	67	22	28	
Cambria AFS	San Luis Obispo	5	35.5	121.07	690	78	62	72	61	66	59	16	30	3646
Cameron Park	El Dorado	12	38.6		1800	101	67	98	66	93	65	42	20	
Camp Pardee	Calaveras	12	38.20	120.85	658	106	71	103	70	98	69	36	27	2812
Camp Pendleton	San Diego	10	33.4		50	88	69	85	68	80	67	12	34	
Camp Roberts	Monterey	4	35.79	120.75	765	106	72	101	71	95	69	45	16	2890
Campbell	Santa Clara	4	37.29	121.83	195	93	69	88	66	83	65	30	28	
Campo	San Diego	14	32.59	116.47	2630	101	67	95	66	90	66	41	16	3303
Canoga Park	Los Angeles	9	34.20	118.57	790	104	71	99	70	93	69	38	25	1884
Cantil	Kern	14	35.29	117.97	2010	111	71	107	71	103	70	32	12	
Canyon Dam	Plumas	16	40.09	121.08	4555	93	60	90	59	85	57	39	1	6834
Canyon Lake	Riverside	10	33.8		1500	105	70	101	69	97	68	39	22	
Capitola	Santa Cruz	3	37		64	94	67	88	66	81	63	24	27	
Cardiff-by-the-Sea	San Diego	7	33		80	87	68	83	67	77	65	12	35	
Carlsbad	San Diego	7	33.20		44	87	68	83	67	77	65	10	34	
Carmel Valley	Monterey	3	36.5	121.73	425	94	68	88	66	80	65	20	25	
Carmel-by-the-Sea	Monterey	3	36.5		20	87	65	78	62	71	61	20	30	
Carmichael	Sacramento	12	38.59	121.45	100	104	70	100	69	94	68	35	25	
Carpinteria	Santa Barbara	6	34.40		385	90	69	83	67	77	65	15	30	
Carson	Los Angeles	6	33.79		60	96	69	88	68	82	66	19	33	
Casa de Oro-Mount	San Diego	10	32.7		530	96	71	88	69	84	67	19	34	
Castle AFB	Merced	12	37.40	120.57	188	105	71	101	70	96	69	33	24	2590
Castro Valley	Alameda	3	37.59	122.20	177	93	67	87	67	80	65	25	24	
Castroville	Monterey	3	36.8		20	86	66	77	63	70	61	18	32	
Cathedral City	Riverside	15	33.8		400	117	74	113	73	109	72	33	26	
Catheys Valley	Mariposa	12	37.40	120.05	1000	102	69	99	68	94	67	38	21	
Cecilville	Siskiyou	16	41.09	123.13	3000	95	63	89	62	84	59	44	13	
Cedarville	Modoc	16	41.5	120.17	4670	97	61	94	60	89	58	35	1	6304
Centerville PH	Butte	11	39.79	121.67	522	105	70	100	68	96	67	40	25	2895
Ceres	Stanislaus	12	37.59		90	101	72	96	70	90	67	36	24	
Cerritos	Los Angeles	8	33.90		34	99	71	92	69	85	68	23	33	
Charter Oak	Los Angeles	9	34.1		600	101	70	97	69	91	68	34	29	
Chatsworth	Los Angeles	9	34.2		964	98	69	93	68	87	66	38	26	
Cherry Valley Dam	Tuolumne	10	38		4765	96	62	92	61	88	59	32	9	
Cherryland	Alameda	3	37.5		100	93	67	86	66	79	64	24	26	
Chester	Plumas	16	40.29	121.23	4525	94	62	91	61	86	59	33	-3	
Chico Exp Sta	Butte	11	39.70	121.78	205	105	70	102	69	96	68	37	22	2878
China Lake	San	14	35.70	117.68	2220	112	70	108	68	104	68	33	15	2560
Chino	San Bernardino	10	34		714	104	70	100	69	94	68	35	27	
Chino Hills	San Bernardino	10	34.1		800	104	70	100	69	94	68	35	27	
Chowchilla	Madera	13	37		200	104	72	101	70	96	68	38	22	
Chula Vista	San Diego	7	32.59	117.08	9	90	70	84	68	79	66	9	33	2072
Citrus Heights	Sacramento	12	38.70	121.45	138	104	71	100	70	94	68	36	24	
Claremont	Los Angeles	9	34.09	117.80	1201	101	69	97	68	91	66	34	29	2049
Clarksburg	Yolo	12	38.40	121.53	14	102	70	97	69	91	67	35	24	2971
Clayton	Contra Costa	12	38		60	102	70	97	68	89	65	34	27	
Clearlake Highlands	Lake	2	39	122.72	1360	101	69	97	68	89	65	36	15	
Cloverdale	Sonoma	2	38.79	122.98	320	102	70	97	69	89	66	37	26	2763
Clovis	Fresno	13	36.79	119.72	404	105	72	102	70	98	68	36	22	

City	County	Climate Zone	Latitude	Longitude	Elevation	SUMMER							Winter Median of Extremes	HDD*
						0.1% Dry Bulb	0.1% Wet Bulb	0.5% Dry Bulb	0.5% Wet Bulb	2% Dry Bulb	2% Wet Bulb	Outdoor Daily Range		
Coachella	Riverside	15	33.70		-76	114	74	110	73	106	73	28	25	
Coalinga	Fresno	13	36.20	120.35	671	103	70	98	70	93	69	34	23	2592
Colfax	Placer	11	39.09	120.95	2418	100	66	97	65	92	63	29	22	3424
Colton	San Bernardino	10	34.09		978	105	70	102	68	97	67	35	28	
Colusa	Colusa	11	39.20	122.02	60	103	72	100	70	94	68	36	23	2793
Commerce	Los Angeles	8	33.90		175	98	69	92	68	86	67	23	33	
Compton	Los Angeles	8	33.90	118.22	71	97	69	90	68	83	67	21	33	1606
Concord	Contra Costa	12	38	112.00	195	102	70	97	68	89	65	34	27	3035
Corcoran	Kings	13	36.09	119.70	200	106	72	102	71	98	70	36	22	2666
Corning	Tehama	11	39.9		487	106	71	103	70	98	67	33	23	
Corona	Riverside	10	33.90	117.57	710	104	70	100	69	92	67	35	26	1794
Coronado	San Diego	7	32.70	117.17	20	89	69	82	67	76	65	10	36	1500
Corte Madera	Marin	2	37.90		55	97	68	91	66	84	64	34	28	
Costa Mesa	Orange	6	33.70	117.88	100	88	68	81	66	73	65	16	31	1482
Cotati	Sonoma	2	38.3		100	99	69	94	68	89	66	32	24	
Country Club	San Joaquin	12	37.8		600	102	69	97	68	92	66	30	68	
Covelo	Mendocino	2	39.79	123.25	1385	99	67	93	65	87	63	43	15	4179
Covina	Los Angeles	9	34.09		575	101	70	97	69	91	68	34	29	
Crescent City	Del Norte	1	41.79	124.20	40	75	61	69	59	65	58	18	28	4445
Crestline	San Bernardino	16	34.2		4900	90	62	86	61	81	59	26	13	
Crockett	Contra Costa	12	38	122.22	9	96	68	90	66	85	64	23	28	
Crows Landing	Stanislaus	12	37.40	121.10	140	101	70	96	68	89	66	33	23	2767
Cucamonga	San Bernardino	10	34.09		1450	103	69	99	68	93	65	31	29	
Cudahy	Los Angeles	8	33.90		130	98	70	91	69	85	67	21	33	
Culver City	Los Angeles	8	34	118.40	106	96	70	88	69	83	67	18	35	1515
Cupertino	Santa Clara	4	37.29	122.00	70	96	68	88	67	80	64	30	28	
Cuyama	Santa Barbara	4	34.90	116.58	2255	99	68	96	67	89	66	42	13	
Cuyamaca	San Diego	7	33		4650	92	64	85	62	81	59	29	11	4848
Cypress	Orange	8	33.79		75	98	70	92	69	85	67	24	31	
Daggett AP	San Bernardino	14	34.90	116.78	1915	109	68	106	68	102	66	33	21	2203
Daly City	San Mateo	3	37.59	122.50	410	84	65	78	62	73	61	16	34	
Dana Point	Orange	6	33.5		100	91	69	84	68	78	66	13	30	
Danville	Contra Costa	12	37.8		368	102	69	97	68	92	66	30	23	
Davis	Yolo	12	38.5	121.77	60	103	72	99	70	93	68	41	24	2844
De Sabla	Butte	11	39.90	121.62	2713	97	66	94	64	88	62	35	18	4237
Death Valley	Inyo	14	36.5	116.87	-194	121	77	118	76	114	74	28	27	1147
Deep Springs Clg	Inyo	16	37.5	117.98	5225	98	60	95	59	92	58	35	-3	
Deer Creek PH	Nevada	16	39.29	120.85	4455	93	61	91	60	87	58	39	10	5863
Del Aire	Los Angeles	6	34		100	91	69	84	67	79	66	15	37	
Delano	Kern	13	35.79		323	106	71	102	70	98	69	36	22	
Denair	Stanislaus	12	37.59	120.78	137	100	70	95	69	89	67	38	22	2974
Desert Hot Springs	Riverside	15	34		1060	115	73	111	72	107	71	35	24	
Diamond Bar	Los Angeles	9	34		880	101	69	97	68	92	66	33	28	
Dinuba	Tulare	13	36.5		340	104	73	101	70	96	69	36	24	
Discovery Bay	Contra Costa	12	38.1		10	102	70	97	68	89	65	34	27	
Dixon	Solano	12	38.40	121.85	100	104	72	99	70	93	68	36	24	2826
Dobbins	Yuba	11	39.40	121.20	1640	104	70	101	68	96	67	31	24	
Donner Mem Stt Pk	Nevada/Placer	16	39.29	120.25	5937	85	56	82	56	77	54	40	-3	
Donner Summit	Placer	16	39.40	120.33	7239	80	53	77	53	72	50	40	-8	8290
Downey	Los Angeles	8	33.90	118.00	110	98	71	90	70	84	68	21	32	

City	County	Climate Zone	Latitude	Longitude	Elevation	SUMMER							Winter Median of Extremes	HDD*
						0.1% Dry Bulb	0.1% Wet Bulb	0.5% Dry Bulb	0.5% Wet Bulb	2% Dry Bulb	2% Wet Bulb	Outdoor Daily Range		
Downieville RS	Sierra	16	39.59	120.80	2895	98	64	95	63	90	61	42	13	
Doyle	Lassen	16	40	120.10	4390	96	63	93	62	88	59	42	0	
Dry Canyon Res	Ventura	16	34.5	118.53	1455	105	71	100	69	96	68	32	24	
Duarte	Los Angeles	9	34.09		500	100	69	96	68	90	67	33	31	
Dublin	Alameda	12	37.70	121.50	200	99	69	93	67	86	65	35	24	
Dudleys	Mariposa	12	37.70	120.10	3000	97	65	94	64	90	62	44	10	4959
Duttons Landing	Napa	2	38.2	122.30	20	96	68	91	66	84	64	31	26	
Eagle Mtn	Riverside	14	33.79	115.45	973	113	72	110	71	105	69	24	32	1138
Earlimart	Tulare	13	35.8		283	106	71	102	70	98	69	36	23	
East Compton	Los Angeles	8	34		71	97	69	90	68	83	67	21	33	
East Hemet	Riverside	10	33.7		1655	109	70	104	69	101	67	40	20	
East La Mirada	Los Angeles	9	33.9		115	99	70	91	69	85	68	26	31	
East Los Angeles	Los Angeles	9	34	118.25	250	99	69	92	68	86	67	21	38	
East Palo Alto	San Mateo	3	37.5		25	93	66	85	64	77	62	25	26	
East Park Res	Colusa	11	39.40	122.52	1205	101	69	97	68	92	66	38	19	3455
East Pasadena	Los Angeles	16	34.2		864	99	69	94	68	88	67	30	32	
East Porterville	Tulare	13	36.1		393	106	71	102	70	97	69	36	25	
East San Gabriel	Los Angeles	9	34.1		450	99	70	94	69	88	68	30	30	
Edwards AFB	Kern	14	34.90	117.87	2316	107	69	104	68	99	66	35	10	3123
El Cajon	San Diego	10	32.70	116.95	525	96	70	91	69	87	67	30	29	
El Capitan Dam	San Diego	14	32.90	116.82	600	105	71	98	70	93	68	35	29	1533
El Centro	Imperial	15	32.79	115.57	-30	115	74	111	73	107	73	34	26	1212
El Cerrito	Contra Costa	3	37.79		70	91	66	84	64	75	62	17	30	
El Dorado Hills	El Dorado	12	38.6		673	103	70	100	69	94	67	36	24	
El Mirage	San Bernardino	14	34.59		2910	105	69	101	68	97	66	31	9	
El Monte	Los Angeles	9	34.09		271	101	71	97	70	91	68	30	31	
El Paso de Robles	San Luis Obispo	4	35.6		721	102	65	95	65	90	65	44	16	
El Rio	Ventura	6	34.29		50	95	69	88	68	82	66	20	30	
El Segundo	Los Angeles	6	33.90		105	91	69	84	68	79	66	14	37	
El Sobrante	Contra Costa	3	37.9		55	91	66	87	65	82	64	25	30	
El Toro MCAS	Orange	8	33.70	117.73	380	96	69	89	69	82	68	26	34	1591
El Toro Station	Orange	8	33.7		380	96	69	89	69	82	68	26	34	
Electra PH	Amador	12	38.29	120.67	715	106	70	102	69	98	68	41	23	2858
Elk Grove	Sacramento	12	38.4		50	104	71	100	69	94	68	35	29	
Elk Valley	Del Norte	16	42	123.72	1705	96	65	90	63	84	61	39	16	5404
Elsinore	Riverside	10	33.70	117.33	1285	105	71	101	70	98	69	39	22	2128
Encinitas	San Diego	7	33		50	87	68	83	67	77	65	10	35	
Encino	Los Angeles	9	34.2		750	103	71	98	69	92	67	27	28	
Enterprise	Shasta	11	40.59		470	107	69	103	68	97	67	29	26	
Escondido	San Diego	10	33.09	117.08	660	97	69	90	68	84	67	29	26	2005
Eureka	Humboldt	1	40.79	124.17	43	75	61	69	59	65	58	11	30	4679
Exeter	Tulare	13	36.3		350	104	72	101	71	97	69	39	24	
Fair Oaks	Sacramento	12	38.70	121.27	50	104	70	100	69	94	69	36	23	
Fairfax	Marin	2	38		110	96	68	90	66	83	63	34	26	
Fairfield FS	Solano	12	38.29	122.03	38	103	69	98	68	91	66	34	24	2686
Fairmont	Los Angeles	14	34.70	118.43	3060	100	67	96	66	92	65	22	22	3330
Fairview	Tulare	16	35.9		3519	97	67	94	66	90	64	43	11	
Fallbrook	San Diego	10	33.59	117.25	660	94	68	89	67	85	66	29	26	2077
Farmersville	Tulare	13	36.3		350	104	72	101	72	97	69	39	24	
Felton	Santa Cruz	3	37		100	94	68	88	66	81	64	28	27	

City	County	Climate Zone	Latitude	Longitude	Elevation	SUMMER							Winter Median of Extremes	HDD*
						0.1% Dry Bulb	0.1% Wet Bulb	0.5% Dry Bulb	0.5% Wet Bulb	2% Dry Bulb	2% Wet Bulb	Outdoor Daily Range		
Ferndale	Humboldt	1	40.5	124.30	1445	76	57	66	56	62	54	12	28	
Fillmore	Ventura	9	34.40		435	100	70	94	69	87	67	30	28	
Five Points	Fresno	13	36.40	120.15	285	103	71	99	70	93	68	36	21	
Fleming Fish &	Lassen	16	40.40	120.32	4000	96	62	93	61	88	59	40	-3	
Florence-Graham	Los Angeles	8	34		175	98	69	90	68	84	67	19	35	
Florin	Sacramento	12	38.5		100	104	71	100	69	94	68	35	29	
Folsom Dam	Sacramento	12	38.70	121.17	350	104	70	101	69	95	67	36	25	
Fontana	San Bernardino	10	34.09	117.43	1090	105	70	101	69	97	67	33	30	1530
Foothill Farms	Sacramento	12	38.6		90	104	71	100	70	94	68	36	24	
Forest Glen	Trinity	16	40.40	123.33	2340	96	65	92	64	88	62	42	12	
Fort Baker	Marin	3	37.79	122.47	15	87	66	81	65	73	65	12	33	3080
Fort Bidwell	Modoc	16	41.90	120.13	4498	93	60	90	59	85	57	38	-2	6381
Fort Bragg	Mendocino	1	39.5	123.82	80	75	60	67	59	62	58	15	29	4424
Fort Jones RS	Siskiyou	16	41.59	122.85	2725	98	64	93	63	88	61	44	5	5590
Fort MacArthur	San Diego	7	33.70	118.30	200	92	69	84	68	78	66	13	35	1819
Fort Ord	Monterey	3	36.70	121.77	134	86	65	77	63	70	60	18	24	3818
Fort Ross	Sonoma	1	38.5	123.25	116	79	63	74	62	65	59	19	30	4127
Fortuna	Humboldt	1	40.6		100	75	61	69	59	65	58	11	30	
Foster City	San Mateo	3	37.5	122.73	20	92	67	84	65	76	63	22	29	
Fountain Valley	Orange	6	33.70		60	97	70	90	68	84	67	18	33	
Freedom	Santa Cruz	3	37		1495	89	67	85	64	79	62	22	27	
Fremont	Alameda	3	37.5	122.00	56	94	67	88	65	81	63	24	25	
Fresno AP	Fresno	13	36.79	119.72	328	104	73	101	71	97	68	34	24	2650
Friant Gov Camp	Fresno	13	37	119.72	410	106	72	103	70	100	68	40	23	2768
Fullerton	Orange	8	33.90		340	100	70	94	69	87	68	26	30	
Galt	Sacramento	12	38.2		40	101	70	97	68	91	67	38	23	
Garden Acres	San Joaquin	12	38		20	103	71	98	69	93	67	35	24	
Garden Grove	Orange	8	33.59		85	98	70	91	68	84	67	23	31	
Gardena	Los Angeles	8	33.90		40	92	69	85	68	80	66	18	32	
George AFB	San Bernardino	14	34.59	117.38	2875	105	67	102	65	98	62	31	19	2887
Georgetown RS	El Dorado	12	38.90	120.78	3001	98	64	95	63	90	61	31	18	
Giant Forest	Tulare	16	36.59	118.77	6412	84	56	81	55	77	53	26	5	
Gillespie Field	Solano	12	32.79		385	98	71	91	70	85	68	30	24	
Gilroy	Santa Clara	4	37	121.57	194	101	70	93	68	86	65	25	23	
Glen Avon	Riverside	10	34		827	105	70	101	69	95	67	35	28	
Glendale	Los Angeles	9	34.20		563	101	70	96	68	90	67	28	30	
Glendora	Los Angeles	9	34.09		822	102	69	98	68	92	67	35	30	
Glennville	Kern	16	35.70	118.73	3140	97	67	94	66	90	64	43	11	4423
Gold Rock Rch	Imperial	15	32.90		485	113	73	110	72	106	70	28	31	
Golden Hills	Kern	16	35.1		4000	97	66	93	65	89	64	33	13	
Granada Hills	Los Angeles	6	34.4	118.53	1032	100	70	95	68	89	66	37	28	
Grand Terrace	San Bernardino	10	34.1		1000	105	70	102	68	97	67	35	28	
Grant Grove	Tulare	16	36.70	118.97	6600	82	56	78	55	74	52	26	6	7044
Grass Valley	Nevada	11	39.20	121.07	2400	99	67	96	65	91	63	29	19	
Graton	Sonoma	2	38.40	122.87	200	95	68	91	67	82	64	34	22	3409
Greenacres	Kern	13	35.3		400	106	71	102	70	98	68	34	26	
Greenfield	Monterey	4	36.2		287	92	67	88	65	84	64	32	22	
Grossmont	San Diego	7	32.70		530	96	69	89	68	84	66	23	31	
Grover City	San Luis Obispo	5	35.09		100	93	69	86	64	80	62	18	30	
Guadalupe	Santa Barbara	5	35		85	92	66	86	64	79	62	18	28	

City	County	Climate Zone	Latitude	Longitude	Elevation	SUMMER							Winter Median of Extremes	HDD*
						0.1% Dry Bulb	0.1% Wet Bulb	0.5% Dry Bulb	0.5% Wet Bulb	2% Dry Bulb	2% Wet Bulb	Outdoor Daily Range		
Hacienda Hts	Los Angeles	9	34		300	100	69	96	68	90	67	28	31	
Haiwee	Inyo	16	36.09	117.95	3825	102	65	99	64	95	62	27	15	3700
Half Moon Bay	San Mateo	3	37.5	122.43	60	83	64	76	62	69	59	15	32	3843
Hamilton AFB	Marin	2	38.09	122.50	3	95	69	88	67	81	65	28	27	3311
Hanford	Kings	13	36.29	119.67	242	102	71	99	70	94	68	37	22	2736
Happy Camp RS	Siskiyou	16	41.79	123.37	1150	103	67	97	66	92	65	41	18	4263
Hat Creek PH 1	Shasta	16	40.90	121.55	3015	99	65	96	64	91	62	48	2	5689
Hawaiian Gardens	Los Angeles	8	33.79		75	97	70	91	69	84	67	23	32	
Hawthorne	Los Angeles	8	33.90		70	92	69	85	68	80	66	16	37	
Hayfield Pumps	Riverside	14	33.70	115.63	1370	112	71	108	70	104	68	31	24	1529
Hayward	Alameda	3	37.70	122.12	530	92	66	86	65	81	62	24	26	2909
Healdsburg	Sonoma	2	38.59	122.87	102	102	69	95	68	90	66	37	26	2572
Hemet	Riverside	10	33.70		1655	109	70	104	69	101	67	40	20	
Henshaw Dam	San Diego	10	33.20		2700	99	68	94	67	90	66	38	15	3708
Hercules	Contra Costa	3	38		15	91	66	87	65	82	64	25	30	
Hermosa Beach	Los Angeles	6	33.90		16	92	69	84	68	78	66	12	38	
Hesperia	San Bernardino	14	34.4		3191	105	67	101	65	97	63	38	14	
Hetch Hetchy	Tuolomne	16	38	119.78	3870	93	62	89	61	85	59	32	14	4816
Highland	San Bernardino	10	34.09		1315	106	70	102	69	97	68	36	26	
Hillcrest Center	Kern	16	35.40		500	106	71	102	70	98	68	34	26	
Hillsborough	San Mateo	3	37.59	122.30	352	90	66	82	65	74	64	23	30	
Hilt	Siskiyou	16	42	122.63	2900	97	64	93	62	89	60	39	5	
Hollister	San Benito	4	36.90	121.42	280	96	68	89	67	81	65	30	21	2725
Hollywood	Los Angeles	9	34	118.38	384	96	70	89	69	83	67	20	36	
Home Gardens	Riverside	10	33.9		678	104	70	100	69	92	67	35	26	
Hoopa	Humboldt	2	41	123.67	360	100	67	92	66	87	64	25	23	
Huntington Beach	Orange	6	33.70	117.80	40	91	69	83	67	76	66	14	34	
Huntington Lake	Fresno	16	37.20	119.22	7020	80	55	77	54	73	51	25	3	7632
Huntington Park	Los Angeles	8	34	118.00	175	98	70	90	69	84	67	20	38	
Idlewild	Del Norte	1	41.90	124.00	1250	103	68	96	66	92	65	40	18	
Idria	San Benito	4	36.40	120.67	2650	97	66	92	65	87	62	27	24	3128
Idyllwild	Riverside	16	33.70	116.72	5397	93	62	89	61	84	60	35	9	
Imperial AP	Imperial	15	32.79	115.57	-59	114	74	110	73	106	72	31	26	1060
Imperial Beach	San Diego	7	32.5	117.12	23	87	69	82	68	78	67	10	35	1839
Imperial CO	Imperial	15	32.90		-64	112	73	108	72	104	71	31	29	976
Independence	Inyo	16	36.79		3950	104	61	101	60	97	60	31	12	
Indio	Riverside	15	33.70	116.25	11	115	75	112	75	107	74	30	24	1059
Inglewood	Los Angeles	8	33.90	118.00	105	92	68	85	67	80	65	15	37	
Inyokern NAS	Kern	14	35.70	117.82	2440	110	71	106	68	102	66	37	15	2772
Ione	Amador	12	38.3		298	101	70	97	68	91	67	38	23	
Iron Mtn	Shasta	11	34.09	115.13	922	116	75	112	74	108	73	26	29	1251
Irvine	Orange	8	33.70	118.00	50	96	69	88	68	82	67	27	33	
Isla Vista	Santa Barbara	6	34.5		40	90	69	83	67	77	65	20	33	
Jess Valley	Modoc	16	41.29		5300	92	59	89	58	84	56	35	-7	7045
John Wayne AP	Orange	6	33.59		115	98	70	91	68	84	67	26	33	1496
Julian Wynola	San Diego	14	33.09	116.80	3650	96	66	91	64	87	62	39	20	4049
Kentfield	Marin	2	38	122.55	120	97	66	91	65	84	63	35	27	3009
Kerman	Fresno	13	36.6		216	105	73	101	71	97	68	34	24	
Kern River PH 1	Kings	13	35.5	118.78	970	106	72	103	71	99	69	26	30	1878
Kern River PH 3	Kern	16	35.79	118.57	2703	103	69	100	68	96	66	34	19	2891

City	County	Climate Zone	Latitude	Longitude	Elevation	SUMMER							Winter Median of Extremes	HDD*
						0.1% Dry Bulb	0.1% Wet Bulb	0.5% Dry Bulb	0.5% Wet Bulb	2% Dry Bulb	2% Wet Bulb	Outdoor Daily Range		
Kettleman Stn	Kings	13	36.09	120.08	508	104	71	100	70	93	68	31	26	2180
King City	Monterey	4	36.20	121.13	320	94	67	90	65	85	64	36	20	2639
Kingsburg	Fresno	13	36.4		297	104	73	101	71	97	69	36	24	
Klamath	Del Norte	1	41.5	124.08	25	79	62	71	60	66	58	18	26	4509
Knights Ferry	Stanislaus	12	37.79	120.57	315	103	70	99	68	94	67	37	19	
La Canada-Flintridge	Los Angeles	9	34.20	118.00	1365	99	69	95	68	88	66	30	32	
La Crescenta-	Los Angeles	9	34.20	118.00	1565	98	69	94	68	87	66	33	31	
La Habra	Orange	9	33.90	118.00	305	100	69	94	68	87	67	27	30	
La Habra Heights	Los Angeles	9	34		400	100	69	94	68	87	67	27	30	
La Mesa	San Diego	7	32.79	117.02	530	94	70	88	69	84	67	23	34	1567
La Mirada	Los Angeles	9	33.90	118.00	115	99	70	91	69	85	68	26	31	
La Palma	Orange	8	33.90	118.00	75	98	69	92	68	85	67	25	31	
La Puente	Los Angeles	9	34	118.00	320	101	71	97	70	91	69	28	31	
La Quinta	Riverside	15	33.8		400	116	74	112	73	108	72	34	26	
La Riviera	Sacramento	12	38.6		190	104	71	100	70	94	68	32	30	
La Verne	Los Angeles	9	34.09	118.00	1235	101	69	97	68	91	67	34	29	
Ladera Heights	Los Angeles	9	34.1		100	91	67	84	67	79	66	14	37	
Lafayette	Contra Costa	12	37.90	122.13	535	100	69	94	67	87	66	32	24	
Laguna Beach	Orange	6	33.5	117.78	35	91	69	83	68	76	66	18	30	2222
Laguna Niguel	Orange	6	33.6		500	95	67	87	66	81	63	22	33	
Lake Arrowhead	San Bernardino	16	34.2	117.18	5205	90	62	86	61	81	59	26	13	5310
Lake Elsinore	Riverside	10	33.7		1233	105	70	101	69	97	68	39	22	
Lake Los Angeles	Los Angeles	14	34.7		2300	106	68	102	67	98	66	35	12	
Lake Spaulding	Nevada	16	39.29	120.63	5156	89	58	86	57	83	55	34	3	6447
Lakeland Village	Riverside	10	33.6		1233	105	70	101	69	97	68	39	12	
Lakeport	Lake	2	39	122.92	1347	97	67	93	66	88	63	41	20	3728
Lakeshore	Fresno	16	40.90		1075	104	69	100	68	95	66	28	29	
Lakeside	San Diego	10	32.79	117.00	690	95	69	90	68	86	66	20	26	
Lakewood	Los Angeles	8	33.90	118.00	45	98	70	90	68	84	66	22	33	
Lamont	Kern	13	35.29	120.00	500	106	72	102	71	98	69	34	26	
Lancaster	Los Angeles	14	34.70	118.20	2340	106	68	102	67	98	66	35	12	
Larksfield-Wikiup	Sonoma	2	38.5		170	99	69	96	68	92	66	35	24	
Larkspur	Marin	2	37.90	122.50	20	97	68	91	66	84	64	34	28	
Las Plumas	Butte	11	39.70		506	104	71	101	70	96	68	32	24	
Lathrop	San Joaquin	12	37.8		22	103	71	98	69	93	67	35	24	
Lava Beds	Siskiyou	16	41.70	121.52	4770	93	59	89	58	84	56	41	-1	
Lawndale	Los Angeles	8	33.90	118.00	66	92	69	85	68	80	66	16	37	
Le Grand	Merced	12	37.20	120.25	255	101	70	96	68	91	66	38	23	2696
Lemon Grove	San Diego	7	32.70	117.20	437	96	71	88	69	84	67	19	34	
Lemoncove	Tulare	13	36.40	119.03	513	105	72	102	70	98	68	38	25	2513
Lemoore NAS	Kings	13	36.29	119.95	228	104	72	101	71	97	69	37	19	2960
Lennox	Los Angeles	8	33.90	117.75	71	92	69	85	68	80	66	16	37	
Lincoln Village	San Joaquin	12	38		12	101	70	96	68	91	67	37	24	
Linda	Yuba	11	39		60	105	72	102	70	97	68	30	27	
Lindsay	Tulare	13	36.20	119.07	395	105	72	101	71	97	69	40	24	2634
Little Panoche	Fresno	13	36.79		677	100	68	94	67	86	66	33	23	
Live Oak	Sutter	11	39.2		75	105	70	102	69	97	69	36	24	
Livermore	Alameda	12	37.70	121.95	490	100	69	95	68	88	67	35	22	3012
Livingston	Merced	12	37.3		165	103	72	100	70	95	68	39	24	
Llano Shawnee	Los Angeles	14	34.5	117.75	3820	104	68	99	67	95	65	31	21	

City	County	Climate Zone	Latitude	Longitude	Elevation	SUMMER							Winter Median of Extremes	HDD*
						0.1% Dry Bulb	0.1% Wet Bulb	0.5% Dry Bulb	0.5% Wet Bulb	2% Dry Bulb	2% Wet Bulb	Outdoor Daily Range		
Lodgepole	Lassen	16	36.59	118.72	6735	84	57	80	56	78	54	26	-4	
Lodi	San Joaquin	12	38.09	121.28	40	101	70	97	68	91	67	38	23	2859
Loma Linda	San Bernardino	10	34	117.50	1150	106	70	103	69	99	67	36	27	
Lomita	Los Angeles	6	33.79	119.00	56	95	69	87	68	81	66	18	33	
Lompoc	Santa Barbara	5	34.90	120.45	95	84	63	77	62	72	60	18	26	2888
Long Beach AP	Los Angeles	6	33.79	118.23	25	99	71	90	69	84	66	21	33	1606
Long Beach	Los Angeles	6	33.70	118.15	34	97	70	88	68	82	65	18	35	
Loomis	Placer	11	38.8		408	107	71	103	70	98	69	39	21	
Los Alamitos NAS	Orange	8	33.79	118.05	30	98	71	89	69	83	68	23	32	1740
Los Altos	Santa Clara	4	37.29	122.00	163	96	68	88	65	80	62	26	28	
Los Altos Hills	Santa Clara	4	37.3		183	93	67	85	64	77	63	25	28	
Los Angeles AP	Los Angeles	6	33.90	118.40	97	91	67	84	67	79	66	14	37	1819
Los Angeles CO	Los Angeles	9	34	118.23	270	99	69	92	68	86	67	21	38	1245
Los Banos	Merced	12	37	120.87	120	100	70	96	68	88	67	42	22	2616
Los Banos Res	Merced	12	37	120.87	407	101	70	97	68	89	67	42	23	
Los Gatos	Santa Clara	4	37.20	121.97	365	98	69	90	67	82	66	32	26	2741
Los Serranos	San Bernardino	10	34.1		714	104	70	100	69	94	68	35	27	
Lucas Vly -	Sonoma	2	38.3		20	79	63	74	62	65	59	12	30	
Lucerne Valley	San Bernardino	14	34.5	116.95	2957	105	67	101	66	98	64	38	12	
Lynwood	Los Angeles	8	33.90	118.00	88	98	70	90	69	83	67	21	32	
Madera	Madera	13	37	120.07	268	105	72	101	70	96	68	40	24	2673
Madera Acres	Madera	13	36.9		275	105	72	101	70	96	68	40	24	
Manhattan Beach	Los Angeles	6	33.90	118.00	120	91	69	84	68	79	66	12	38	
Manteca	San Joaquin	12	37.79	121.20	34	102	70	97	68	91	67	37	24	
Manzanita Lake	Shasta	16	40.5	121.57	5850	87	58	84	57	79	55	34	-3	7617
March AFB	Riverside	10	33.90	117.25	1511	103	70	99	68	94	65	34	23	2089
Maricopa	Kern	13	35.09	119.38	675	106	71	102	70	98	68	29	25	2302
Marina	Monterey	3	36.70		20	86	66	77	63	70	61	18	32	
Marina del Rey	Los Angeles	9	34.1		40	91	69	84	68	79	66	12	38	
Markley Cove	Napa	2	38.5	122.12	480	104	70	99	69	93	67	39	23	
Martinez-FS	Contra Costa	12	38	122.13	40	99	67	94	66	88	65	36	28	
Marysville	Yuba	11	39.20	121.58	60	105	72	102	70	97	68	36	27	2552
Mather AFB	Sacramento	12	38.59	121.30	96	104	71	100	70	94	68	35	28	
Maywood	Los Angeles	8	34	118.00	170	97	70	91	69	85	67	21	34	
McClellan AFB	Sacramento	12	38.70	121.40	86	105	71	102	70	96	68	35	23	2566
McCloud	Siskiyou	16	41.29	122.13	3300	96	63	93	62	87	60	42	5	5990
McFarland	Kern	13	35.6		350	106	71	102	70	98	69	36	22	
McKinleyville	Humboldt	1	40.9		33	75	61	69	59	65	58	11	28	
Mecca FS	Riverside	15	33.59	116.07	-180	115	75	111	75	107	74	30	24	1185
Mendota	Fresno	13	36.7		169	105	73	101	71	97	68	34	24	
Menlo Park	San Mateo	3	37.40	122.33	65	94	67	86	65	78	63	25	27	
Mentone	San Bernardino	10	34.1		1700	106	70	102	69	98	67	34	27	
Merced AP	Merced	12	37.29	120.57	153	103	71	100	69	95	67	36	21	2653
Mill Creek	Tehama	16	35.09	117.02	2940	102	67	97	66	94	65	28	28	
Mill Valley	Marin	3	37.90	122.58	80	97	68	91	66	84	64	28	28	3400
Millbrae	San Mateo	3	37.59	122.35	10	90	66	82	63	74	61	24	30	
Milpitas	Santa Clara	4	37.40	121.90	15	94	68	87	65	79	63	27	27	
Mineral	Tehama	16	40.40	121.60	4911	90	60	87	59	82	57	38	2	7257
Mira Loma	Riverside	10	34		700	105	70	101	69	95	66	34	25	

City	County	Climate Zone	Latitude	Longitude	Elevation	SUMMER							Winter Median of Extremes	HDD*
						0.1% Dry Bulb	0.1% Wet Bulb	0.5% Dry Bulb	0.5% Wet Bulb	2% Dry Bulb	2% Wet Bulb	Outdoor Daily Range		
Miramar AFS	San Diego	7	32.90	117.13	477	97	69	91	68	86	67	22	32	1532
Miramonte	Fresno	13	34.4		750	102	71	97	69	91	68	38	25	
Mission Viejo	Orange	8	33.59	118.00	350	95	67	87	66	81	63	22	33	
Mitchell Caverns	San Berardino	14	34.90		4350	102	64	98	63	94	61	29	21	
Modesto	Stanislaus	12	37.59	121.00	91	102	73	99	70	95	68	36	25	2671
Moffett Field NAS	Santa Clara	4	37.40	122.05	39	89	68	84	66	78	64	23	30	2511
Mojave	Kern	14	35.09	118.18	2735	106	68	102	67	98	66	35	16	3012
Mono Lake	Mono	16	38	119.15	6450	91	58	88	57	84	55	32	4	6518
Monrovia	Los Angeles	9	34.20	118.30	562	100	69	96	68	90	67	30	33	
Montague	Siskiyou	16	41.79	122.47	2648	99	66	95	65	90	63	39	3	5474
Montclair	San Bernardino	10	34	117.00	1220	104	69	100	68	94	66	35	28	
Montebello	Los Angeles	9	34	118.10	205	98	69	93	68	86	67	24	33	
Monterey AP	Monterey	3	36.59	121.87	245	86	65	77	62	70	61	20	30	3556
Monterey CO	Monterey	3	36.59	121.87	345	87	65	78	62	71	61	20	32	3169
Monterey Park	Los Angeles	9	34	118.00	380	99	69	94	68	87	67	23	30	
Monticello Dam	Solano	2	38.5	122.12	505	105	71	100	70	94	68	39	26	
Moraga	Contra Costa	12	37.79	122.17	600	99	68	93	66	86	64	27	21	
Moreno Valley	Riverside	10	33.9		1600	103	70	99	68	94	65	34	27	
Morgan Hill	Santa Clara	4	37.09	120.00	350	100	69	92	68	85	66	25	26	
Morro Bay FD	San Luis Obispo	5	35.40	120.85	115	88	65	82	64	76	62	14	31	
Mount Baldy Notch	San Bernardino	16	34.29	117.62	7735	80	58	76	57	71	54	32	4	
Mount Diablo	Contra Costa	12	37.90	121.92	2100	101	68	96	66	87	65	28	27	4600
Mount Hamilton	Santa Clara	4	37.29	121.65	4206	95	59	88	58	81	56	18	18	4724
Mount Hebron RS	Siskiyou	16	41.79	122.02	4250	92	60	88	59	82	57	42	-10	
Mount San Jacinto	Riverside	16	33.79	116.63	8417	82	56	77	55	73	53	35	-1	
Mount Shasta	Siskiyou	16	41.29	122.32	3535	93	62	89	61	84	59	34	8	5890
Mount Wilson	Los Angeles	16	34.20	118.07	5709	90	63	85	61	79	58	21	15	4296
Mountain Pass	San Bernardino	14	35.5	115.53	4730	100	65	96	64	92	63	29	11	
Mountain View	Santa Clara	4	37.5	121.90	95	93	67	85	64	77	62	25	28	
Muscoy	San Bernardino	10	34.2		1400	105	71	101	69	96	66	37	26	
Nacimiento Dam	San Luis Obispo	4	35.79	120.88	770	100	68	94	66	88	64	35	22	
Napa State Hospital	Napa	2	37.29	122.27	60	94	67	91	67	86	66	29	26	2749
National City	San Diego	7	32.70	117.00	34	87	70	82	68	78	66	10	36	
Needles AP	San Bernardino	15	34.79	114.62	913	117	73	114	72	110	71	26	27	1391
Nevada City	Nevada	11	39.29	121.02	2600	97	66	94	64	88	63	41	14	4900
Newark	Alameda	3	37.5	122.03	10	94	68	89	67	82	65	24	29	
Newhall Soledad	Los Angeles	9	34.40	118.55	1243	104	70	100	68	95	67	42	27	
Newman	Stanislaus	12	37.29	121.05	90	104	71	99	69	93	67	38	22	
Newport Beach	Orange	6	33.59	117.88	10	87	68	80	66	72	65	12	34	1952
Nipomo	San Luis Obispo	5	35		330	90	66	83	64	78	61	23	25	
Norco	Riverside	10	33.90	117.00	700	103	70	99	69	94	67	34	27	
North Auburn	Placer	11	38.9		1300	103	69	100	67	95	66	33	25	
North Fork RS	Madera	16	37.20	119.50	2630	98	66	95	65	92	62	36	15	
North Highlands	Sacramento	12	38.59	121.42	45	104	71	100	69	94	67	35	23	2566
North Hollywood	Los Angeles	9	34.20	118.38	619	102	70	97	69	91	67	31	28	
Northridge	Los Angeles	9	34.2		875	101	70	96	69	90	67	36	30	
Norwalk	Los Angeles	8	33.9		97	99	69	90	68	84	67	26	31	
Novato	Marin	2	38.09	122.52	370	94	64	87	63	80	61	30	25	
Oakdale	Stanislaus	12	37.79	120.87	215	102	71	99	69	93	67	37	22	
Oakland AP	Alameda	3	37.70	122.20	6	91	66	84	64	77	62	20	32	2909

City	County	Climate Zone	Latitude	Longitude	Elevation	SUMMER							Winter Median of Extremes	HDD*
						0.1% Dry Bulb	0.1% Wet Bulb	0.5% Dry Bulb	0.5% Wet Bulb	2% Dry Bulb	2% Wet Bulb	Outdoor Daily Range		
Oakland Museum	Alameda	3	37.79	122.17	30	96	68	89	66	82	63	20	31	
Oakley	Contra Costa	12	38		20	102	70	97	68	91	66	34	22	
Oceano	San Luis Obispo	5	35.1		20	93	69	86	64	80	62	18	30	
Oceanside	San Diego	7	33.20	117.40	10	84	69	80	67	74	65	10	33	
Oildale	Kern	13	35.5	119.00	450	106	71	102	70	98	68	34	26	
Ojai	Ventura	9	34.5	119.25	750	102	71	97	69	91	68	38	25	2145
Olivehurst	Yuba	11	39		64	105	72	102	70	97	68	36	27	
Ontario AP	San Bernardino	10	34	117.00	934	105	70	101	69	95	66	34	26	1710
Opal Cliffs	Santa Cruz	3	37		125	94	68	88	66	81	64	28	27	
Orange	Orange	8	33.59	118.00	194	99	70	92	68	85	67	27	33	
Orange Cove	Fresno	13	36.59	119.30	431	104	71	100	69	97	68	38	25	2684
Orangevale	Sacramento	12	38.70	121.20	140	105	72	102	70	96	68	36	24	
Orick Prairie Creek	Humboldt	1	41.40	124.02	161	80	61	75	60	70	59	23	25	4816
Orinda	Contra Costa	12	37.90	122.17	550	99	68	93	66	86	64	32	21	
Orland	Glenn	11	39.79	122.20	254	105	71	102	70	97	68	36	22	2824
Orleans	Humboldt	2	41.29	123.53	403	104	70	97	68	91	66	42	21	3628
Orosi	Tulare	13	36.5		400	104	73	101	70	96	69	36	24	
Oroville East	Butte	11	39.5		171	106	71	104	70	98	69	37	25	
Oroville RS	Butte	11	39.5	121.55	300	106	71	104	70	98	69	37	25	
Otay-Castle Pk	San Diego	7	32.59	117.00	500	87	68	81	66	74	63	10	33	
Oxnard AFB	Ventura	6	34.20	119.18	49	94	69	86	68	79	67	21	30	2068
Pacific Grove	Monterey	3	36.70	122.00	114	87	66	78	63	71	61	19	31	
Pacifica	San Mateo	3	37.59	122.00	13	87	65	79	62	71	60	16	31	
Pacoima	Los Angeles	16	34.26	118.43	895	104	71	99	70	94	68	35	29	
Palermo	Butte	11	39.4		154	106	71	104	70	98	69	37	25	
Palm Desert	Riverside	15	33.70	116.50	200	116	74	112	73	108	72	34	26	
Palm Desert Country	Riverside	15	33.7		243	116	74	112	73	108	72	34	26	
Palm Springs	Riverside	15	33.79	116.53	411	117	74	113	73	109	72	35	26	1109
Palmdale AP	Los Angeles	14	34.59	118.10	2517	107	67	103	67	98	64	33	12	2929
Palmdale CO	Los Angeles	14	34.59	118.10	2596	106	67	102	67	97	64	35	13	2908
Palo Alto	Santa Clara	4	37.5	122.13	25	93	66	85	64	77	62	25	26	2891
Palomar Obsy	San Diego	14	33.40	116.87	5545	90	62	85	61	80	59	22	16	4141
Palos Verdes	Los Angeles	6	33.79	119.00	216	92	69	84	68	78	66	14	38	
Panorama City	Los Angeles	9	34.22	118.45	801	103	71	98	69	92	67	32	28	
Paradise	Butte	11	39.79	121.60	1750	102	69	99	67	94	66	34	25	
Paramount	Los Angeles	8	33.90	117.00	70	98	70	90	69	84	67	22	32	
Parker Res	San Bernardino	15	34.29	114.17	738	115	74	112	73	108	72	26	32	1223
Parkway-South Sacramento	Sacramento	12	38.5		17	104	71	100	70	94	68	32	30	
Parlier	Fresno	13	36.6		320	104	73	101	71	97	68	38	24	
Pasadena	Los Angeles	9	34.20	118.15	864	99	69	94	68	88	67	30	32	1551
Paso Robles AP	San Luis Obispo	4	35.70	120.68	815	104	66	97	66	92	65	40	19	2973
Paso Robles CO	San Luis Obispo	4	35.59	120.68	700	102	65	95	65	90	65	44	16	2885
Patterson	Stanislaus	12	37.4		97	101	72	96	70	90	67	36	24	
Pedley	Riverside	10	34		718	105	70	101	69	95	66	34	26	
Pendleton MCB	San Diego	7	33.29	117.30	63	92	68	87	67	81	66	22	34	1532
Pendleton MCB	San Diego	7	33.20	117.4	24	84	69	80	67	75	65	10	39	1782
Perris	Riverside	10	33.79	117.22	1470	105	70	101	69	97	68	39	22	
Petaluma FS 2	Sonoma	2	38.20	122.63	16	98	69	92	67	85	66	31	24	2959
Pico Rivera	Los Angeles	9	34	118.00	180	98	70	91	69	85	67	24	31	

City	County	Climate Zone	Latitude	Longitude	Elevation	SUMMER							Winter Median of Extremes	HDD*
						0.1% Dry Bulb	0.1% Wet Bulb	0.5% Dry Bulb	0.5% Wet Bulb	2% Dry Bulb	2% Wet Bulb	Outdoor Daily Range		
Piedmont	Alameda	3	37.79	122.00	325	96	68	89	66	82	63	23	31	
Pinnacles NM	San Bernardino	14	36.5	121.18	1307	98	68	94	67	89	64	45	20	2956
Pinole	Contra Costa	3	38	122.30	10	91	66	87	65	82	64	25	30	
Pismo Beach	San Luis Obispo	5	35.09	120.62	80	92	66	85	64	80	62	16	30	2756
Pittsburg	Contra Costa	12	38	121.80	50	102	70	97	68	90	67	34	26	
Placentia	Orange	8	33.90	118.00	323	101	69	93	68	87	67	28	30	
Placerville	El Dorado	12	38.70	120.80	1890	101	67	98	66	93	65	42	20	4086
Placerville IFG	El Dorado	12	38.70	120.80	2755	100	66	97	65	92	64	42	23	
Platina	Shasta	11	40.40	122.88	2260	96	65	92	64	87	61	36	13	
Pleasant Hill	Contra Costa	12	37.90	122.00	102	96	68	93	67	88	65	34	25	
Pleasanton	Alameda	12	37.59	121.78	350	97	68	94	67	89	65	35	24	
Point Arena	Mendocino	1	38.90	123.73	100	76	62	72	60	67	58	19	29	4747
Point Arguello	Santa Barbara	5	34.59	120.67	76	75	64	71	63	65	59	17	29	3826
Point Mugu	Ventura	6	34.09	119.12	14	88	68	81	67	75	66	15	33	2328
Point Piedras	San Luis Obispo	5	35.70	121.28	59	73	60	67	59	61	57	10	36	3841
Pomona Cal Poly	Los Angeles	9	34.09	117.82	740	102	70	98	69	93	67	36	27	1971
Port Chicago ND	Contra Costa	12	38	122.02	50	98	69	94	68	88	66	34	28	
Port Hueneme	Ventura	6	34.20	119.00	13	88	68	81	67	75	66	15	33	2334
Porterville	Tulare	13	36.09	119.02	393	106	71	102	70	97	69	36	25	2456
Portola	Plumas	16	39.79	120.47	4850	92	63	89	61	84	59	48	-9	7111
Posey 3 E	Tulare	13	35.79	119.00	4960	89	62	86	61	82	59	26	9	
Potter Valley PH	Mendocino	2	39.40	123.13	1015	101	68	96	67	89	65	40	20	3276
Poway Valley	San Diego	10	33	117.00	500	100	70	94	69	89	68	26	29	
Priest Valley	Monterey	4	36.20	120.70	2300	97	66	93	65	88	63	34	13	4144
Prunedale	Monterey	3	36.6		260	86	66	83	65	79	62	20	26	
Quartz Hill	Los Angeles	14	34.6		2428	106	68	102	67	98	66	35	12	
Quincy	Plumas	16	39.90	120.93	3409	101	64	98	63	93	62	45	1	5763
Ramona Spaulding	San Diego	10	33.09	116.82	1480	103	70	97	69	92	68	40	22	
Rancho Bernardo	San Diego	10	33.02	117.06	500	96	69	91	68	85	67	26	29	
Rancho Cordova	Sacramento	12	38.59	121.30	190	104	72	100	69	94	68	35	26	
Rancho Mirage	Riverside	15	33.8		248	117	74	113	73	109	72	33	26	
Rancho Palos	Los Angeles	6	33.70	118.17	216	92	69	84	68	78	66	14	38	
Rancho San Diego	San Diego	10	32.8		300	94	69	86	68	82	66	30	34	
Rancho Santa	Orange	8	33.6		116	95	67	87	66	81	63	22	33	
Randsburg	Kern	14	35.29	117.65	3570	105	67	102	66	97	65	30	19	2922
Red Bluff AP	Tehama	11	40.20	122.25	342	107	70	104	69	98	66	31	24	2688
Redding FS 4	Shasta	11	40.59	122.40	470	107	69	103	68	97	67	30	26	2544
Redlands	San Bernadino	10	34.09	117.18	1318	106	70	102	69	98	67	34	27	1993
Redondo Beach	Los Angeles	6	33.79	118.32	45	92	69	84	68	78	66	12	37	
Redwood City	San Mateo	3	37.5	122.23	31	90	67	86	66	81	64	28	28	2599
Reedley	Fresno	13	36.59	119.70	344	104	71	101	70	96	68	40	24	
Reseda	Los Angeles	9	34.2		736	103	71	98	69	92	67	32	28	
Rialto	San Bernardino	10	34.09	117.00	1254	105	70	101	69	96	66	35	28	
Richardson Grove	Humbolt	2	40	123.78	500	96	67	92	66	87	64	28	25	
Richmond	Contra Costa	3	37.90	121.60	55	88	65	84	64	77	62	17	31	2684
Ridgecrest	Kern	14	35.59	117.80	2340	110	70	106	68	102	66	35	15	
Rio Del Mar	Santa Cruz	3	37		50	94	67	88	66	83	63	30	27	
Rio Linda	Sacramento	12	38.6		86	104	72	100	70	94	68	32	28	
Ripon	San Joaquin	12	37.7		61	102	70	97	68	91	67	37	23	
Riverbank	Stanislaus	12	37.7		133	102	73	99	70	95	68	36	25	

City	County	Climate Zone	Latitude	Longitude	Elevation	SUMMER							Winter Median of Extremes	HDD*
						0.1% Dry Bulb	0.1% Wet Bulb	0.5% Dry Bulb	0.5% Wet Bulb	2% Dry Bulb	2% Wet Bulb	Outdoor Daily Range		
Riverside Exp Sta	Riverside	10	34	117.38	986	106	71	102	69	97	67	36	29	
Riverside FS 3	Riverside	10	34	117.38	840	104	70	100	69	95	65	37	27	1818
Rocklin	Placer	11	38.79	121.23	239	108	72	104	70	99	69	39	20	3143
Rodeo	Contra Costa	3	38.1		15	93	67	90	66	84	64	23	28	
Rohnert Park	Sonoma	2	38.40	122.55	106	99	69	96	68	92	66	33	24	
Rolling Hills	Los Angeles	6	33.59	119.00	216	92	69	84	68	78	66	15	38	
Rosamond	Kern	14	34.8		2326	106	68	102	67	98	66	35	16	
Roseland	Sonoma	2	38.4		167	99	69	96	68	92	66	35	24	
Rosemead	Los Angeles	9	34	118.00	275	98	70	90	69	84	67	27	30	
Rosemont	Sacramento	12	38.3		190	104	71	100	70	94	68	32	30	
Roseville	Placer	11	38.70	121.22	160	105	71	102	70	96	68	36	24	
Rossmoor	Orange	8	33.79		20	92	67	85	64	79	62	19	32	
Rowland Hts	Los Angeles	9	33.90	118.00	540	99	70	93	69	86	68	27	29	
Rubidoux	Riverside	10	34	117.00	792	106	71	102	70	97	68	36	27	
Sacramento AP	Sacramento	12	38.5	121.50	17	104	72	100	70	94	68	35	26	2843
Sacramento CO	Sacramento	12	38.59	121.50	84	104	71	100	70	94	68	32	30	
Saint Helena	Napa	2	38.5	122.47	225	102	70	98	69	93	67	40	22	2878
Saint Mary's College	Contra Costa	12	37.79	122.12	623	98	69	93	68	86	66	28	21	3543
Salinas 3 E	Monterey	3	36.70	121.60	85	86	66	83	65	79	62	20	26	
Salinas AP	Monterey	3	36.70	121.60	69	85	67	82	65	78	62	20	28	2959
Salt Springs PH	Amador/Calavaras	16	38.5	120.22	3700	95	62	92	61	87	59	27	19	3857
Salyer RS	Trinity	16	40.90	123.57	623	102	69	95	67	87	64	33	22	
San Anselmo	Marin	2	38	122.00	50	95	67	89	66	82	65	32	26	
San Antonio Canyon	Los Angeles	16	34.20	117.67	2394	100	68	96	67	90	65	33	29	
San Antonio Mission	Monterey	4	36	117.67	1060	99	69	94	68	88	67	28	19	
San Bernardino	San Bernardino	10	34.1	117.32	1125	106	70	102	69	98	68	39	27	1777
San Bruno	San Mateo	3	37.7	122.42	20	86	66	80	64	73	62	23	30	3042
San Carlos	San Mateo	3	37.5		26	92	67	88	65	82	63	28	28	
San Clemente	Orange	6	33.40	118.58	208	91	68	85	67	80	66	12	31	
San Diego AP	San Diego	7	32.70	117.17	13	88	70	83	69	78	68	13	38	1507
San Dimas	Los Angeles	9	34		955	102	70	98	69	92	67	35	30	
San Fernando	Los Angeles	9	34.29	118.47	977	104	71	99	70	94	68	37	30	1800
San Francisco AP	San Francisco	3	37.59	122.38	8	89	66	83	64	74	61	20	31	3042
San Francisco CO	San Francisco	3	37.79	122.42	52	84	65	79	63	71	60	14	38	3080
San Gabriel FD	Los Angeles	9	34.09	118.10	450	99	70	94	69	88	68	30	30	1532
San Gregorio 2 SE	San Mateo	3	37.29		275	87	66	81	63	74	61	30	27	
San Jacinto	Riverside	10	33.79	116.97	1535	110	70	105	69	102	68	41	20	2376
San Jose	Santa Clara	4	37.40	121.93	67	94	68	86	66	78	64	26	29	2438
San Leandro	Alameda	3	37.70		45	89	67	83	64	76	62	22	28	
San Lorenzo	Alameda	3	37.70		45	89	67	83	64	76	62	23	28	
San Luis Dam	Merced	12	37.09		277	97	68	91	66	86	64	32	25	
San Luis Obispo	San Luis Obispo	5	35.29	120.72	320	94	63	87	63	81	62	26	30	2498
San Marcos	San Diego	10	33.1		567	97	69	98	68	84	67	29	26	
San Marino	Los Angeles	9	34.20		300	100	69	95	68	88	66	28	30	
San Mateo	San Mateo	3	37.5	122.30	21	92	67	84	65	76	63	24	31	2655
San Nicholas Island	Ventura	6	33.20	119.47	504	85	66	78	65	70	64	11	39	2454
San Pablo	Contra Costa	3	37.59		30	90	65	84	63	77	61	17	29	
San Pedro	Los Angeles	6	33.70	118.27	10	92	69	84	68	78	66	13	35	1819
San Rafael	Marin	2	38	122.55	40	96	67	90	65	83	63	29	30	2440
San Ramon	Contra Costa	12	37.7		360	99	69	93	67	86	65	35	24	

City	County	Climate Zone	Latitude	Longitude	Elevation	SUMMER							Winter Median of Extremes	HDD*
						0.1% Dry Bulb	0.1% Wet Bulb	0.5% Dry Bulb	0.5% Wet Bulb	2% Dry Bulb	2% Wet Bulb	Outdoor Daily Range		
Sandberg	Los Angeles	16	34.79	118.73	4517	95	63	91	61	87	59	32	17	4427
Sanger	Fresno	13	36.70		364	105	72	101	70	96	68	37	24	
Santa Ana FS	Orange	8	33.79	117.83	115	98	70	91	68	84	67	26	33	1430
Santa Barbara AP	Santa Barbara	6	34.40	119.83	9	90	69	83	67	77	65	20	29	2487
Santa Barbara CO	Santa Barbara	6	34.40	119.68	5	91	69	84	67	78	65	22	33	1994
Santa Clara Univ	Santa Clara	4	37.40	121.93	88	90	67	87	65	82	63	30	29	2566
Santa Clarita	Los Angeles	9	34.4		1300	103	71	98	70	93	68	36	30	
Santa Cruz	Santa Cruz	3	37	122.02	125	94	68	88	66	81	64	28	27	3136
Santa Fe Springs	Los Angeles	9	33.90		280	99	69	90	68	84	67	24	31	
Santa Maria AP	Santa Barbara	5	34.90	120.45	236	90	66	83	64	78	61	23	25	3053
Santa Monica	Los Angeles	6	34	118.50	15	85	67	78	66	72	64	15	39	1873
Santa Paula	Ventura	9	34.40		263	101	71	94	70	87	68	28	28	2030
Santa Rosa	Sonoma	2	38.5	122.82	167	99	69	96	68	92	66	35	24	2980
Santee	San Diego	10	32.79		400	96	69	91	68	87	67	20	25	
Saratoga	Santa Clara	4	37.29		500	96	67	88	66	80	65	31	27	
Sausalito	Sonoma	3	37.90		10	85	66	80	65	73	63	12	30	
Sawyer's Bar RS	Siskiyou	16	41.29		2169	100	66	95	65	88	62	38	14	4102
Scotia	Humboldt	1	40.5	124.37	139	78	61	74	60	69	58	19	28	3954
Scotts Valley	Santa Cruz	3	37		400	94	68	88	66	81	64	28	27	
Seal Beach	Orange	6	33.79	118.08	21	94	69	86	68	80	65	15	35	1519
Seaside	Monterey	4	36.59		17	85	66	79	64	73	62	20	30	
Sebastapol	Sonoma	2	38.4		102	99	69	96	68	92	66	35	24	
Selma	Fresno	13	36.59		305	104	73	101	71	97	68	38	24	
Sepulveda	Los Angeles	9	34.2		818	103	71	98	69	92	67	32	28	
Shafter	Kern	13	35.5	119.17	345	106	71	102	70	98	68	28	24	2185
Shasta Dam	Shasta	16	40.70		1076	105	69	101	68	95	67	27	29	2943
Shelter Cove	Humboldt	1	40	124.07	110	80	61	73	60	68	57	15	34	
Sherman Oaks	Los Angeles	9	34.2		657	103	71	98	69	92	67	28	29	
Sierra City	Sierra	16	39.59	120.12	4230	96	62	93	61	89	59	43	12	
Sierra Madre	Los Angeles	9	34.20		1153	102	69	96	68	90	67	27	32	
Sierraville RS	Sierra	16	39.59	120.37	4975	94	60	91	59	86	57	44	-10	6893
Signal Hill	Los Angeles	6	33.5		100	99	70	90	69	84	66	19	35	
Simi Valley	Ventura	9	34.40		500	98	70	93	68	87	66	30	28	
Solana Beach	San Diego	7	33		15	87	68	83	67	77	65	10	35	
Soledad	Monterey	3	36.4		200	90	67	87	65	82	64	23	24	
Sonoma	Sonoma	2	38.29		70	101	70	96	69	90	67	40	22	2998
Sonora RS	Tuolumne	12	38	120.38	1749	103	68	100	67	95	66	34	20	3537
Soquel	Santa Cruz	3	37		50	94	67	88	66	81	63	24	27	
South El Monte	Los Angeles	9	34		270	101	72	97	70	91	68	28	31	
South Entr Yosemite	Tuolumne	16	37.5	119.63	5120	92	61	88	60	84	59	36	8	5789
South Gate	Los Angeles	8	33.90		120	97	70	90	69	84	67	21	32	
South Laguna	Orange	6	33.6		100	91	69	83	68	78	66	18	30	
South Lake Tahoe	El Dorado	16	38.90		6200	85	56	82	55	71	54	33	-2	
South Oroville	Butte	11	39.5		174	106	71	104	70	98	69	37	25	
South Pasadena	Los Angeles	9	34		657	99	69	94	68	88	67	30	31	
South San Francisco	San Mateo	3	37.70		10	87	67	81	64	72	62	20	32	
South San Gabriel	Los Angeles	9	34.1		450	99	70	94	69	88	68	73	30	
South Whittier	Los Angeles	9	33.90		300	100	70	92	69	84	68	30	31	
South Yuba City	Sutter	11	39.1		59	105	69	101	69	96	68	36	24	
Spring Valley	San Diego	10	32.70		300	94	69	86	68	82	66	30	34	

City	County	Climate Zone	Latitude	Longitude	Elevation	SUMMER							Winter Median of Extremes	HDD*
						0.1% Dry Bulb	0.1% Wet Bulb	0.5% Dry Bulb	0.5% Wet Bulb	2% Dry Bulb	2% Wet Bulb	Outdoor Daily Range		
Squaw Valley	Placer	16	39.20		6235	88	57	85	56	80	54	40	-10	
Squirrel Inn	San Bernardino	14	34.20	117.23	5680	86	61	82	60	77	58	23	12	5175
Stanford	Santa Clara	4	37.5		23	93	66	85	64	77	62	25	26	
Stanton	Orange	8	33.59		45	98	69	91	68	84	67	24	31	
Stockton AP	San Joaquin	12	37.90	121.25	22	103	71	98	69	93	67	35	24	2806
Stockton FS 4	San Joaquin	12	38	121.32	12	101	70	96	68	91	67	37	24	2846
Stony Gorge Res	Glenn	11	39.59	122.53	791	104	70	99	69	93	67	37	21	3149
Strawberry Valley	Tuolumne	16	39.59		3808	96	63	93	62	88	60	32	14	5120
Studio City	Los Angeles	9	34.28	118.39	620	102	70	97	69	91	67	31	28	
Suisun City	Solano	12	38.2		72	103	71	98	69	91	66	35	24	
Sun City	Riverside	10	33.7		1420	105	70	101	69	97	68	39	22	
Sunland	Los Angeles	9	34.29		1460	107	71	102	70	96	68	36	28	
Sunnyvale	Santa Clara	4	37.29	122.03	97	96	68	88	66	80	64	26	29	2511
Susanville AP	Lassen	16	40.40	120.57	4148	98	62	95	61	90	59	38	-1	6233
Taft	Kern	13	35.1		987	106	71	102	70	98	68	34	26	
Tahoe City	Placer	16	39.20	120.13	6230	84	56	81	55	76	53	36	2	8085
Tahoe Valley AP	Placer	16	38.90		6254	85	56	82	55	77	53	38	-5	
Tamalpais-Homestead Valley	Marin	3	37.9		25	97	68	91	66	84	64	28	28	
Tarzana	Los Angeles	6	34.18	118.55	800	104	71	99	69	93	68	27	27	
Tehachapi	Kern	16	35.09		3975	97	66	93	65	89	64	33	13	4494
Tejon Rancho	Los Angeles	16	35	118.75	1425	107	71	103	70	99	68	27	24	2602
Temecula	Riverside	10	33.5		1006	101	69	96	68	91	67	34	24	
Temple City	Los Angeles	9	34.09		403	101	70	95	69	89	68	27	30	
Termo	Los Angeles	16	40.90		5300	95	60	92	59	87	57	37	-17	
Thermal AP	Riverside	15	33.59		-112	114	74	110	74	106	74	29	26	1154
Thermalito	Butte	11	37.9		25	106	71	104	70	98	69	37	25	
Thousand Oaks	Ventura	9	34.20		810	98	69	93	68	88	67	30	27	
Three Rivers PH 1	Tulare	13	36.5		1140	105	70	102	69	98	67	38	24	2642
Tiburon	Marin	3	37.90		90	85	66	80	65	73	63	12	30	
Tiger Creek PH	Amador	12	38.5	120.48	2355	100	66	96	55	92	63	36	20	3795
Torrance	Los Angeles	6	33.79	118.33	110	93	69	86	68	80	66	18	32	1859
Tracy Carbona	San Joaquin	12	37.70		140	102	70	97	68	90	67	38	24	2704
Tracy Pumps	San Joaquin	12	37.79		61	104	71	99	69	92	68	39	23	
Travis AFB	Sonoma	12	38.29	121.93	72	103	71	98	69	91	66	35	24	2725
Trinity Dam	Trinity	16	40.79		2500	99	65	94	64	88	62	37	17	
Trona	San Bernardino	14	35.79	117.38	1695	113	72	109	70	105	68	35	18	2415
Truckee RS	Nevada	16	39.29	120.18	5995	90	58	87	57	82	55	40	-10	8230
Tujunga	Los Angeles	9	34.29		1820	103	70	99	69	94	67	36	20	
Tulare	Tulare	13	36.20		290	105	72	101	71	96	69	39	24	
Tulelake	Siskiyou	16	42		4035	92	60	88	59	83	57	41	-5	6854
Turlock	Stanislaus	12	37.5		100	104	72	100	70	95	68	40	24	
Turntable Creek	Plumas	16	40.79		1067	105	69	101	68	95	66	28	24	
Tustin Foothills	Orange	8	33.8		500	99	71	92	69	85	68	27	28	
Tustin Irvine Rch	Orange	8	33.70	117.78	118	99	71	92	69	85	68	27	28	1856
Twentynine Palms	San Bernardino	14	34.09	116.05	1975	110	71	107	70	103	69	31	21	1973
Twin Lakes	Mono	16	38.70		7829	73	49	64	47	57	46	30	-7	9196
Twitchell Dam	San Luis Obispo	5	35		582	99	70	93	68	88	66	26	26	
UCLA	Los Angeles	9	34.09		430	93	69	86	68	80	66	20	39	1509
Ukiah	Mendocino	2	39.20	123.20	623	100	70	97	69	92	68	42	22	2958

City	County	Climate Zone	Latitude	Longitude	Elevation	SUMMER							Winter Median of Extremes	HDD*
						0.1% Dry Bulb	0.1% Wet Bulb	0.5% Dry Bulb	0.5% Wet Bulb	2% Dry Bulb	2% Wet Bulb	Outdoor Daily Range		
Union City	Alameda	3	37.6		5	90	67	87	66	81	63	20	25	
Upland	San Bernardino	10	34.1		1605	102	69	98	68	92	66	31	29	2175
Upper Lake RS	Lake	2	39.20	122.95	1347	98	68	95	67	91	64	39	18	
Upper San Leandro	Alameda	3	37.79		394	93	67	87	66	80	63	22	28	
Vacaville	Solano	12	38.40		105	103	71	100	70	94	68	40	23	2788
Valinda	Los Angeles	9	34		340	102	70	98	69	92	68	28	31	
Valle Vista	Riverside	10	33.8		1655	109	70	104	69	101	67	40	20	
Vallejo	Solano	3	38.09		85	93	67	90	66	84	64	23	28	
Valyermo RS	Los Angeles	14	34.5		3600	100	67	96	66	91	65	41	12	3870
Van Nuys	Los Angeles	9	34.2		708	103	71	98	69	92	67	30	28	
Vandenburg AFB	Santa Barbara	5	34.70	122.80	368	85	62	77	61	71	60	16	30	3451
Ventura	Ventura	6	34.29		341	89	68	82	67	76	66	15	29	
Victorville Pumps	San Bernardino	14	34.5		2858	105	67	101	65	97	62	39	14	3191
View Park	Los Angeles	6, 8	34		300	95	69	88	68	78	66	18	36	
Villa Park	Orange	8	33.8		300	99	70	92	68	85	67	27	33	
Vincent	Los Angeles	14	34.5		3135	105	67	101	65	96	64	33	10	
Visalia	Tulare	13	36.29		325	103	71	100	70	96	69	38	25	2459
Vista	San Diego	7	33.20		510	96	69	90	68	85	67	16	30	
Volta PH	Merced	12	40.5		2220	101	66	98	65	93	63	33	21	
Walnut	Los Angeles	9	34		550	101	70	97	69	92	69	30	28	
Walnut Creek	Contra Costa	12	37.90		245	100	69	94	67	87	66	32	23	
Walnut Grove	Sacramento	12	38.20		23	102	70	98	69	92	68	37	24	
Walnut Park	Los Angeles	8	33.9		45	92	69	84	68	78	66	12	37	
Warner Springs	San Diego	14	33.29		3180	100	67	95	66	91	65	40	15	3591
Wasco	Kern	13	35.59		333	105	71	101	70	97	68	36	23	2466
Watsonville	Santa Cruz	3	36.90		95	86	66	82	64	79	61	22	28	3418
Weaverville RS	Trinity	16	40.70		2050	100	67	95	66	89	63	46	10	4992
Weed FD	Siskiyou	16	41.40		3590	92	63	89	62	84	59	35	4	
West Athens	Los Angeles	8	33.9		25	92	69	85	68	80	66	18	32	
West Carson	Los Angeles	6	33.79		100	92	69	87	68	81	66	18	32	
West Compton	Los Angeles	8	33.9		71	97	69	90	68	83	67	21	33	
West Covina	Los Angeles	9	34		365	102	70	98	69	92	68	34	29	
West Hollywood	Los Angeles	9	34		290	95	70	89	69	82	67	20	38	
West Pittsburg	Contra Costa	12	38		12	102	70	97	68	90	67	34	26	
West Puente Valley	Los Angeles	9	34	117.93	500	101	71	97	70	91	68	26	31	
West Sacramento	Yolo	12	38.6		19	104	72	100	70	94	68	35	26	
West Whittier-Los	Los Angeles	9	34		320	99	69	90	68	84	67	24	31	
Westlake Village	Los Angeles	9	34.2		750	103	71	99	70	94	69	26	26	
Westminster	Orange	6	33.79		38	95	70	88	68	81	67	23	33	
Westmont	Los Angeles	8	33.9		110	96	70	89	69	83	67	20	36	
Whiskeytown Res	Shasta	11	40.59		1295	105	69	101	68	96	67	31	25	
White Mtn 1	Mono	16	37.5		1015	73	49	69	47	65	45	37	-15	
White Mtn 2	Mono	16	37.59		1247	61	42	58	41	54	40	38	-20	
Whittier	Los Angeles	9	34		320	99	69	90	68	84	67	24	31	
Wildomar	Riversie	10	33.6		1255	103	70	99	69	94	68	36	23	
Wildrose RS	Inyo	16	36.29		4100	100	64	97	63	93	61	33	13	
Williams	Colusa	11	39.20		85	104	71	100	70	94	68	36	24	
Willits	Mendocino	2	39.40	123.32	1350	95	66	89	65	82	62	38	18	
Willow Brook	Los Angeles	8	33.90		60	97	70	90	69	83	67	21	35	
Willow Creek	Humboldt	2	41	123	461	104	70	98	68	92	66	35	22	

City	County	Climate Zone	Latitude	Longitude	Elevation	SUMMER							Winter Median of Extremes	HDD*
						0.1% Dry Bulb	0.1% Wet Bulb	0.5% Dry Bulb	0.5% Wet Bulb	2% Dry Bulb	2% Wet Bulb	Outdoor Daily Range		
Willows	Colusa	11	39.5		140	104	71	100	70	94	68	36	22	2836
Windsor	Sonoma	2	38.5		130	99	69	96	68	92	66	35	24	
Winters	Yolo	12	38.5		135	104	71	99	70	93	68	38	24	2593
Winton	Merced	12	37.4		168	103	71	100	69	95	67	36	21	
Woodcrest	Riverside	10	33.9		1500	104	70	100	69	95	65	37	27	
Woodfords	Alpine	16	38.79		5671	92	59	89	58	84	56	32	0	6047
Woodlake	Tulare	13	36.3		500	103	71	100	70	96	69	38	25	
Woodland	Yolo	12	38.70		69	106	72	101	71	96	69	40	25	2708
Woodland Hills	Los Angeles	9	34.2		944	104	71	99	70	93	68	32	26	
Woodside	San Mateo	3	37.5		75	92	67	84	66	76	63	24	22	
Yorba Linda	Orange	8	33.90		350	102	70	94	69	88	68	31	30	1643
Yosemite Park Hq	Mariposa	16	37.70		3970	97	63	94	62	90	60	38	11	4785
Yreka	Siskiyou	16	41.70		2625	99	66	95	65	90	64	39	8	5395
Yuba City	Sutter	11	39.09		70	105	69	101	69	96	68	36	24	
Yucaipa	San Bernardino	10	34		2600	106	68	102	67	98	65	35	27	
Yucca Valley	San Bernardino	14	34.2		2600	108	71	105	70	101	69	32	19	

***Heating Degree Day** is a unit, based on temperature difference and time, used in estimating fuel consumption and specifying nominal annual heating load of a building For any one day when the mean temperature is less than 65°F (18°C), there exist as many degree days as there are Fahrenheit degrees difference in temperature between mean temperature for the day and 65°F (18°C).

ACM ND-2005

Appendix ND - Compliance Procedures for Relocatable Public School Buildings

ND.1 Purpose and Scope

This document describes the compliance procedures that shall be followed when the whole building performance approach is used for relocatable public school buildings. Relocatable public school buildings are constructed (manufactured) at a central location and could be shipped and installed in any California climate zone. Furthermore, once they arrive at the school site, they could be positioned so that the windows face in any direction. The portable nature of relocatable classrooms requires that a special procedure be followed for showing compliance when the whole building performance method is used. Compliance documentation for relocatable public school buildings will be reviewed by the Division of the State Architect.

ND.2 The Plan Check Process

The Division of the State Architect (DSA) is the building department for relocatable public school buildings. Since relocatables are manufactured in batches, like cars or other manufactured products, the plan check and approval process occurs in two phases. The first phase is when the relocatable manufacturer completes design of a model or modifies a model. At this point, complete plans and specifications are submitted to the DSA; DSA reviews the plans for compliance with the energy standards and other California Building Code (CBC) requirements; and a "pre-check" (PC) design approval is granted. Once the PC design is approved, a school district or the manufacturer may file an "over-the-counter" application with DSA to construct one or more relocatables . The over-the-counter application is intended to be reviewed quickly, since the PC design has already been pre-checked. The over-the-counter application is the building permit application for construction and installation of a relocatable at a specific site, and includes the approved PC design drawings as well as site development plans for the proposed site where the relocatable will be installed. An over-the-counter application also is required for the construction of a stockpile of one or more relocatables based on the approved PC design drawings. Stockpiled relocatables are stored typically at the manufacturer's yard until the actual school site is determined where the relocatable will be installed. Another over-the-counter application is required to install a previously stockpiled relocatable at which time site development plans for the proposed site are checked.

The effective date for all buildings subject to the energy standards is the date of permit application. If a building permit application is submitted on or after the effective date, then the new energy standards apply. For relocatable classrooms, the date of the permit application is the date of the over-the-counter application, not the date of the application for PC design approval. The PC design is only valid until the code changes.

ND.3 The Compliance Process

Like other nonresidential buildings, the standard design for relocatable public school buildings is defined by the prescriptive requirements. In the case of relocatables, there are two choices of prescriptive criteria:

- Table 143-C in the Standards may be used for relocatable school buildings that can be installed in any climate zone in the state. In this case, the compliance is demonstrated in climates 14, 15, and 16 and this is accepted as evidence that the classroom will comply in all

climate zones. These relocatables will have a permanent label that allows it to be used anywhere in the state.

- Table 143-A in the Standards may be used for relocatable school buildings that are to be installed in only specific climate zones. In this case, compliance is demonstrated in each climate zone for which the relocatable has been designed to comply. These relocatables will have a permanent label that identifies in which climate zones it may be installed. It is not lawful to install the relocatable in other climate zones.

The building envelope of the standard design has the same geometry as the proposed design, including window area and position of windows on the exterior walls, and meets the prescriptive requirements specified in §143. Lighting power for the standard design meets the prescriptive requirements specified in §146. The HVAC system for the standard design meets the prescriptive requirements specified in §144. The system typically installed in relocatables is a single-zone packaged heat pump or furnace. Most relocatable school buildings do not have water heating systems, so this component is neutral in the analysis. Other modeling assumptions such as equipment loads, are the same for both the proposed design and the standard design and are specified in the Nonresidential ACM Manual.

Manufacturers shall certify compliance with the standards and all compliance documentation shall be provided. If the manufacturer chooses to comply using Table 143-A for compliance in only specific climate zones, then the manufacturers shall indicate the climates zones for which the classroom will be allowed to be located.

Since relocatable public school buildings could be positioned in any orientation, it is necessary to perform compliance calculations for multiple orientations. Each model with the same proposed design energy features shall be rotated through 12 different orientations either in climate zones 14, 15 and 16 for relocatables showing statewide compliance or in the specific climate zones that the manufacturer proposes for the relocatable to be allowed to be installed, i.e., the building with the same proposed design energy features is rotated in 30 degree increments and shall comply in each case. Approved compliance programs shall automate the rotation of the building and reporting of the compliance results to insure it is done correctly and uniformly and to avoid unnecessary documentation.

ND.4 Documentation

The program shall present the results of the compliance calculations in a format similar to Table ND-1. For each of the cases (12 orientations times number of climates), the Time Dependent Valuation (TDV) energy for the *Standard Design* and the *Proposed Design* are shown (the energy features of the *Proposed Design* shall be the same for all orientations). The final column shows the compliance margin, which is the difference between the TDV energy for the *Proposed Design* and the *Standard Design*. Approved compliance programs shall scan the data presented in the Table ND-1 format and prominently highlight the case that has the smallest compliance margin. Complete compliance documentation shall be submitted for the building and energy features that achieve compliance in all of the climate zones and orientations as represented by the case with the smallest margin. DSA may require that compliance documentation for other cases also be submitted; showing that the *Proposed Design* building and energy features are identical to the case submitted, in each orientation and climate zone. Table ND-1 shows rows for climate zones 14, 15, and 16, which are the ones used when the criteria of Table 143-C is used to show compliance throughout the state. If the criteria of Table 143-A is used, then rows shall be added to the table for each climate zone for which the manufacturer wants the relocatable to be allowed to be installed.

Table ND-1 – Summary of Compliance Calculations Needed for Relocatable Classrooms

		TDV Energy		
Climate Zone	Azimuth	Proposed Design	Standard Design	Compliance Margin
14	0			
	30			
	60			
	90			
	120			
	150			
	180			
	210			
	240			
	270			
	300			
	330			
15	0			
	30			
	60			
	90			
	120			
	150			
	180			
	210			
	240			
	270			
	300			
	330			
16	0			
	30			
	60			
	90			
	120			
	150			
	180			
	210			
	240			
	270			
	300			
	330			

ND.5 Optional Features

Relocatable classrooms may come with a variety of optional features, like cars. A school district can buy the “basic model” or it can pay for options. Many of the optional features do not affect energy efficiency and are not significant from the perspective of energy code compliance. Examples include floor finishes (various grades of carpet or tiles), casework, and ceiling and wall finishes. Other optional features do affect energy performance such as window construction,

insulation, lighting systems, lighting controls, HVAC ductwork, HVAC equipment, and HVAC controls.

When a manufacturer offers a relocatable classroom model with a variety of options, it is necessary to identify those options that affect energy performance and to show that the model complies with any combination of the optional features. Most of the time, optional energy features are upgrades that clearly improve performance. If the basic model complies with the Standards, then adding any or all of the optional features would improve performance. The following are examples of optional features that are clear upgrades in terms of energy performance:

- HVAC equipment that has both a higher SEER and higher EER than the equipment in the basic model.
- Lighting systems that result in less power than the basic model.
- Lighting controls, such as occupancy sensors, that are recognized by the standards and for which power adjustment factors in Table 146-A~~B~~ are published in Section ~~§~~146 of the Standards.
- Windows that have both a lower SHGC and lower U-factor (limited to relocatables that do not take credit for daylighting).
- Wall, roof or floor construction options that result in a lower U-factor than the basic model.

For energy code compliance purposes, it is necessary to show that every variation of the relocatable classroom that is offered to customers will comply with the Standards. There are two approaches for achieving this, as defined below:

1) Basic Model Plus Energy Upgrades Approach The simplest approach is to show that the basic model complies with the Standards and that all of the options that are offered to customers are clear energy upgrades that would only improve performance. As long as each and every measure in the basic model is met or exceeded by the energy upgrades, the relocatable classroom will comply with the standards.

While clear upgrades are obvious in most cases, the following are some examples of options that are not energy upgrades, for which additional analysis would be needed to show compliance that every combination of options comply.

- HVAC equipment that has a higher SEER, but a lower EER.
- Windows that lower SHGC but increase U-factor, or vice versa.
- Insulation options that reduce the U-factor for say walls, but increase it for the roof.
- Any other combination of measures that results in the performance of anyone measure being reduced in comparison to a complying basic model.

2) Modeling of Every Combination Approach. A more complex whole building performance approach is required when a model is available with options which in combination may or may not comply. In this case every combination of options shall be modeled, and the specific combinations that comply shall be determined and only those combinations shall be allowed. This approach, while possible, requires considerably more effort on the part of the relocatable manufacturer and its energy consultant. It also places a greater burden on DSA when they issue the over-the-counter building permit for the PC design that only allows specific combinations of energy options.. DSA would have to examine the specific optional features that are proposed with the over-the-counter application and make sure that the proposed combination of measures achieves compliance.

The manufacturer or its energy consultant would need to prepare a table or chart that shows all of the acceptable combinations that achieve compliance. This chart could be quite complex, depending on the number of optional features that are offered.

Table ND-2 is intended to illustrate the complexity that could be involved in modeling of every combination of energy features. It shows a list of typical optional features that would affect energy performance. In this example, there are two possible for each of the eight options, e.g the feature is either there or not (in an actual case there could be a different number of options and a different number of states for any option). In the example any one of the features could be combined with any of the others. The number of possible combinations in this example is two (the number of states) to the eighth power (the number of measures that have two states). The number of possible options is then 2^8 or 256. This is the number of combinations that would need to be modeled in order to determine which combinations of optional features achieves compliance.

Table ND-2 – Examples of Optional Features for Relocatable Classrooms

	Options Offered	States
1	Efficient lighting option	Yes/No
2	High efficiency heat pump	Yes/No
3	Improved wall insulation	Yes/No
4	Improved roof insulation	Yes/No
5	Occupancy sensor for lighting	Yes/No
6	Low-e windows	Yes/No
7	Skylights	Yes/No
8	Daylighting Controls	Yes/No

~~Appendix D:~~

~~Glossary~~

~~Appendix D: Definitions~~

~~Terms, phrases, words, and their derivatives in Part 6 of the California State Building Code shall be defined as specified in Section 101 of that Code. Terms, phrases, words, and their derivatives not found in Section 101 shall be defined as specified in Title 24, Part 2, Chapter 2-4 of the California Code of Regulations. Terms, phrases, words, and their derivatives not found in either Title 24, Part 6 or Chapter 2-4 shall be defined as specified in Part II, Chapter 4 of the Uniform Building Code. Where terms, phrases, words, and their derivatives are not defined in any of the references above, they shall be defined as specified in Webster's Third New International Dictionary of the English Language, Unabridged (1987 ed.), unless the context requires otherwise.~~

~~**ACCA** is the Air-Conditioning Contractors of America.~~

~~**ACCESSIBLE** is having access thereto, but which first may require removal or opening of access panels, doors, or similar obstructions.~~

~~**ADDITION** is any change to a building that increases conditioned floor area and conditioned volume.~~

~~**AIR-TO-AIR HEAT EXCHANGER** is a device which will reduce the heat losses or gains which occur when a building is mechanically ventilated, by transferring heat between the conditioned air being exhausted and the unconditioned air being supplied.~~

~~**ALTERATION** is any change to a building's water heating system, space conditioning system, lighting system, or envelope that is not an addition.ALTERNATIVE CALCULATION METHODS (ACMs) are the Commission's Public Domain Computer Programs, one of the Commission's Simplified Calculation Methods, or any other calculation method approved by the Commission.~~

~~**ALTERNATIVE CALCULATION METHOD (ACM)** is a calculation method used to determine compliance with the building energy efficiency standards other than the reference method which (for the nonresidential building standards) uses the reference computer program, DOE 2.1E, as the computational engine. The current requirements limit ACMs to computer programs since there are specific requirements in this manual for required inputs, automated restrictive outputs, and automatic default assumptions.~~

~~**ANNUAL FUEL UTILIZATION EFFICIENCY (AFUE)** is a measure of the percentage of heat from the combustion of gas or oil which is transferred to the space being heated during a year, as determined using the applicable test method in the Appliance Efficiency Regulations or Section 112.~~

~~**ANNUNCIATED** is a visual signaling device that indicates the on, off, or other status of a load.~~

~~**ANSI** is the American National Standards Institute.~~

~~**APPLIANCE EFFICIENCY REGULATIONS** are the regulations in Title 20, Sections 1601 et. seq. of the California Code of Regulations.~~

~~**APPROVED BY THE COMMISSION** means approval under Section 25402.1 of the Public Resources Code.~~

~~**APPROVED CALCULATION METHOD** (See ALTERNATIVE CALCULATION METHODS).~~

~~**ARI** is the Air-conditioning and Refrigeration Institute.~~

~~**ASHRAE** is the American Society of Heating, Refrigerating, and Air-conditioning Engineers.~~

~~**ASME** is the American Society of Mechanical Engineers.~~

~~**ASTM** is the American Society for Testing and Materials.~~
~~**ATRIUM** is an opening through two or more floor levels other than enclosed stairways, elevators, hoistways, escalators, plumbing, electrical, air-conditioning, or other equipment which is enclosed space and not defined as a mall.~~

~~**ATTIC** is an enclosed unconditioned space directly below the roof and above the ceiling.~~

~~**AUTOMATIC** is capable of operating without human intervention.~~

~~**AUTOMATIC TIME SWITCH CONTROL DEVICES** are devices capable of automatically turning loads off and on based on time schedules.~~

~~**BELOW-GRADE WALL** is the portion of a wall, enclosing conditioned space, that is below the grade line.~~

~~**BUILDING** is any structure or space for which a permit is sought.~~

~~**BUILDING ENVELOPE** is the ensemble of exterior and demising partitions of a building that enclose conditioned space.~~

~~**CAPTIVE-KEY OVERRIDE** is a type of lighting control in which the key that activates the override cannot be released when the lights are in the on position.~~

~~**CEILING** is the interior upper surface of a space separating it from the attic, which has a slope less than 60 degrees from horizontal.~~

~~**CERTIFYING ORGANIZATION** is an independent organization recognized by the Commission to certify manufactured devices for performance values in accordance with procedures adopted by the Commission.~~

~~**CLIMATE CONTROL SYSTEM** (See SPACE CONDITIONING SYSTEM).~~

~~**CLIMATE ZONES** are the 16 geographic areas of California for which the Commission has established typical weather data, prescriptive packages and energy budgets. Climate zone boundary descriptions are in the document "California Climate Zone Descriptions" (July 1995), incorporated herein by reference. Figure 1-A is an approximate map of the 16 climate zones.~~

~~**CMC** means the 1998 California Mechanical Code prior to the effective date designated by the California Building Standards Commission for the 2000 California Mechanical Code. On and after the effective designated by the California Building Standards Commission for the 2000 California Mechanical Code, CMC shall mean the 2000 California Mechanical Code.~~

~~**COEFFICIENT OF PERFORMANCE (COP), COOLING**, is the ratio of the rate of net heat removal to the rate of total energy input, calculated under designated operating conditions and expressed in consistent units, as determined using the applicable test method in the Appliance Efficiency Regulations or Section 112.~~

~~**COEFFICIENT OF PERFORMANCE (COP), HEATING**, is the ratio of the rate of net heat output to the rate of total energy input, calculated under designated operating conditions and expressed in consistent units, as determined using the applicable test method in the Appliance Efficiency Regulations or Section 112.~~

~~**COMMISSION** is the California State Energy Resources Conservation and Development Commission.~~

~~**COMPLETE BUILDING** is an entire building with one occupancy making up 90 percent of the conditioned floor area (see also ENTIRE BUILDING).~~

~~**CONDITIONED FLOOR AREA (CFA)** is the floor area (in square feet) of enclosed conditioned space on all floors of a building, as measured at the floor level of the exterior surfaces of exterior walls enclosing the conditioned space.~~

~~**CONDITIONED SPACE** is space in a building that is either directly conditioned or indirectly conditioned.~~
~~**CONDITIONED VOLUME** is the total volume (in cubic feet) of the conditioned space within a building.~~

~~**CONSTRUCTION LAYERS** are layers of material that make up a construction assembly.~~

~~**COOL ROOF** is a roofing material with high solar reflectance and high emittance that reduces heat gain through the roof.~~

~~**COOLING EQUIPMENT** is equipment used to provide mechanical cooling for a room or rooms in a building.~~

~~**COURTYARD** is an open space through one or more floor levels surrounded by walls within a building.~~

~~**COVERED PRODUCT** is an appliance regulated by the efficiency standards established under the National Appliance Energy Conservation Act, 42 U.S.C. Section 6291 et seq.~~

~~**CRAWL SPACE** is a space immediately under the first floor of a building adjacent to grade.~~

~~**CTI** is the Cooling Tower Institute.~~

~~**C-VALUE** (also known as C-FACTOR) is the time rate of heat flow through unit area of a body induced by a unit temperature difference between the body surfaces, in Btu/hr-ft^2-°F. It is not the same as K-value or K-factor.~~

~~**DAYLIT AREA** is the space on the floor that is the larger of (a) plus (b), or (c);~~

~~(a) For areas daylit by vertical glazing, the daylit area has a length of 15 feet, or the distance on the floor, perpendicular to the glazing, to the nearest 60-inch or higher opaque partition, whichever is less; and a width of the window plus either 2 feet on each side, the distance to an opaque partition, or one-half the distance to the closest skylight or vertical glazing, whichever is least.~~

~~(b) For areas daylit by horizontal glazing, the daylit area is the footprint of the skylight plus, in each of the lateral and longitudinal dimensions of the skylight, the lesser of the floor-to-ceiling height, the distance to the nearest 60-inch or higher opaque partition, or one-half the horizontal distance to the edge of the closest skylight or vertical glazing.~~

~~(c) The daylit area calculated using a method approved by the Commission.~~

~~**DECORATIVE GAS APPLIANCE** is a gas appliance that is designed or installed for visual effect only, cannot burn solid wood, and simulates a fire in a fireplace.~~

~~**DEGREE DAY, HEATING** is a unit, based upon temperature difference and time, used in estimating fuel consumption and specifying nominal annual heating load of a building. For any one day, when the mean temperature is less than 65°F, there exist as many degree days as there are Fahrenheit degrees difference in temperature between the mean temperature for the day and 65°F. The number of degree days for specific geographical locations are those listed in the Residential Manual. For those localities not listed in the Residential Manual the number of degree days is as determined by the applicable enforcing agency.~~

~~**DEMISING PARTITIONS** are barriers that separate conditioned space from enclosed unconditioned space.~~

~~**DEMISING WALL** is a wall that is a demising partition.~~

~~**DENSITY** is the mass per unit volume of a construction material as documented in an ASHRAE handbook, a comparably reliable reference or manufacturer's literature.~~

~~**DESIGN CONDITIONS** are the parameters and conditions used to determine the performance requirements of space conditioning systems. Design conditions for determining design heating and cooling loads are specified in Section 144(b) for nonresidential, high-rise residential, and hotel/motel buildings and in Section 150(h) for low-rise residential buildings.~~

~~**DESIGN HEAT GAIN RATE** is the total calculated heat gain through the building envelope under design conditions.~~

~~**DESIGN HEAT LOSS RATE** is the total calculated heat loss through the building envelope under design conditions.~~

~~**DIRECTLY CONDITIONED SPACE** is an enclosed space that is provided with wood heating, is provided with mechanical heating that has a capacity exceeding 10 Btu/hr-ft^2, or is provided with mechanical cooling that has a capacity exceeding 5 Btu/hr-ft^2, unless the space conditioning system is designed and thermostatically controlled to maintain a process environment temperature less than 55°F or to maintain a process environment temperature greater than 90°F for~~

~~the whole space that the system serves, or unless the space conditioning system is designed and controlled to be incapable of operating at temperatures above 55°F or incapable of operating at temperatures below 90°F at design conditions.~~

~~**DISPLAY LIGHTING** is lighting confined to the area of a display that provides a higher level of illuminance than the level of surrounding ambient illuminance.~~

~~**DISPLAY PERIMETER** is the length of an exterior wall in a B, F-1, or M occupancy that immediately abuts a public sidewalk, measured at the sidewalk level for each story that abuts a public sidewalk.~~

~~**DISPLAY, PUBLIC AREA** are areas for the display of artwork, theme displays, and architectural surfaces in dining and other areas of public access, excluding restrooms and separate banquet rooms.~~

~~**DISPLAY, SALES FEATURE** is an item or items that requires special highlighting to visually attract attention and that is visually set apart from the surrounding area.~~

~~**DISPLAY, SALES FEATURE FLOOR** is a feature display in a retail store, wholesale store, or showroom that requires display lighting.~~

~~**DISPLAY, SALES FEATURE WALL** are the wall display areas, in a retail or wholesale space, that are in the vertical plane of permanent walls or partitions, and that are open shelving feature displays or faces of internally illuminated transparent feature display cases within the Gross Sales Wall Area.~~

~~**DUAL-GLAZED GREENHOUSE WINDOWS** are a type of dual-glazed fenestration product which adds conditioned volume but not conditioned floor area to a building.~~

~~**DUCT SEALING** is a procedure for installing a space conditioning distribution system that minimizes leakage of conditioned air. Minimum specifications for installation procedures, materials, diagnostic testing and field verification are contained in the Residential and Nonresidential ACM Approval Manuals.~~

~~**EAST-FACING** is oriented to within 45 degrees of true east, including 45°00'00" south of east (SE), but excluding 45°00'00" north of east (NE).~~

~~**ECONOMIZER, AIR** is a ducting arrangement and automatic control system that allows a cooling supply fan system to supply outside air to reduce or eliminate the need for mechanical cooling.~~

~~**ECONOMIZER, WATER** is a system by which the supply air of a cooling system is cooled directly or indirectly by evaporation of water, or other appropriate fluid, in order to reduce or eliminate the need for mechanical cooling.~~

~~**EFFECTIVE APERTURE (EA)** is (1) for windows, the visible light transmittance (VLT) times the window wall ratio; and (2) for skylights, the well index times the VLT times the skylight area times 0.85 divided by the gross exterior roof area.~~

~~**EFFICACY** is the ratio of light from a lamp to the electrical power consumed (including ballast losses), expressed in lumens per watt.~~

~~**ENCLOSED SPACE** is space that is substantially surrounded by solid surfaces.~~

~~**ENERGY BUDGET** is the maximum amount of source energy that a proposed building, or portion of a building, can be designed to consume, calculated with the approved procedures specified in Title 24, Part 6.~~

~~**ENERGY EFFICIENCY RATIO (EER)** is the ratio of net cooling capacity (in Btu/hr) to total rate of electrical energy (in watts), of a cooling system under designated operating conditions, as determined using the applicable test method in the Appliance Efficiency Regulations or Section 112.~~

~~**ENERGY FACTOR (EF)** is the ratio of energy output to energy consumption of a water heater, expressed in equivalent units, under designated operating conditions over a 24-hour use cycle, as determined using the applicable test method in the Appliance Efficiency Regulations.~~

~~**ENERGY OBTAINED FROM DEPLETABLE SOURCES** is electricity purchased from a public utility, or any energy obtained from coal, oil, natural gas, or liquefied petroleum gases.~~

~~**ENERGY OBTAINED FROM NONDEPLETABLE SOURCES** is energy that is not energy obtained from depletable sources.~~

~~**ENFORCING AGENCY** is the city, county, or state agency responsible for issuing a building permit.~~

~~**ENTIRE BUILDING** is the ensemble of all enclosed space in a building, including the space for which a permit is sought, plus all existing conditioned and unconditioned space within the structure.~~

~~**ENVELOPE** means BUILDING ENVELOPE.~~

~~**EXFILTRATION** is uncontrolled outward air leakage from inside a building, including leakage through cracks and interstices, around windows and doors, and through any other exterior partition or duct penetration.~~

~~**EXTERIOR DOOR** is a door through an exterior partition that is opaque or has a glazed area that is less than or equal to one-half of the door area. Doors with a glazed area of more than one-half of the door area are treated as a fenestration product.~~

~~**EXTERIOR FLOOR/SOFFIT** is a horizontal exterior partition, or a horizontal demising partition, under conditioned space. For low-rise residential occupancies, exterior floors also include those on grade.~~

~~**EXTERIOR PARTITION** is an opaque, translucent, or transparent solid barrier that separates conditioned space from ambient air or space that is not enclosed. For low-rise residential occupancies, exterior partitions also include barriers that separate conditioned space from unconditioned space, or the ground.~~

~~**EXTERIOR ROOF/CEILING** is an exterior partition, or a demising partition, that has a slope less than 60 degrees from horizontal, that has conditioned space below, and that is not an exterior door or skylight.~~

~~**EXTERIOR ROOF/CEILING AREA** is the area of the exterior surface of exterior roof/ceilings.~~

~~**EXTERIOR WALL** is any wall or element of a wall, or any member or group of memebers, which defines the exterior boundries or courts of a building and which has a slope of 60 degrees or greater with the horizontal plane. An exterior wall or partition is not an exterior floor/soffit, exterior door, exterior roof/ceiling, window, or skylight, or demising wall.~~

~~**EXTERIOR WALL AREA** is the area of the opaque exterior surface of exterior walls.~~

~~**FENESTRATION PRODUCT** is any transparent or translucent material plus any sash, frame, mullions, and dividers, in the envelope of a building, including, but not limited to: windows, sliding glass doors, french doors, skylights, curtain walls, garden windows, and other doors with a glazed area of more than one-half of the door area.~~

~~**FENESTRATION SYSTEM** means a collection of fenestration products included in the design of a building. (See "fenestration product")~~

~~**FIELD-FABRICATED FENESTRATION PRODUCT OR EXTERIOR DOOR** is a fenestration product or exterior door whose frame is made at the construction site of standard dimensional lumber or other materials that were not previously cut, or otherwise formed with the specific intention of being used to fabricate a fenestration product or exterior door. Field fabricated does not include site assembled frame components that were manufactured elsewhere with the intention of being assembled on site (such as knocked down products, sunspace kits and curtainwalls).~~

~~**FIREPLACE** is a hearth and firechamber or similar prepared place in which a solid fuel fire may be burned, as defined in UBC Section 3102.2 and as further clarified in UBC Section 3102.7; these include but are not limited to factory-built fireplaces, masonry fireplaces, and masonry heaters.~~

~~**FLOOR/SOFFIT TYPE** is a floor/soffit assembly having a specific heat capacity, framing type, and U-value~~U-factor~~.~~

~~**FRAMED PARTITION** or **ASSEMBLY** is a partition or assembly constructed using separate structural members spaced not more than 32 inches on center.~~

~~**FRAMING PERCENTAGE** is the fraction of the surface of a partition that is framed expressed in percentage.~~

~~**GAS HEATING SYSTEM** is a natural gas or liqueified petroleum gas heating system.~~

~~**GAS LOG** is a self-contained, free-standing, open-flame, gas-burning appliance consisting of a metal frame or base supporting simulated logs, and designed for installation only in a vented fireplace.~~

~~**GENERAL LIGHTING** is lighting designed to provide a substantially uniform level of illumination throughout an area, exclusive of any provision for special visual tasks or decorative effect. When designed for lower-than-task illuminance used in conjunction with other specific task lighting systems, it is also called "ambient" lighting.~~

~~**GLAZING** (See FENESTRATION PRODUCT).~~

~~**GOVERNMENTAL AGENCY** is any public agency or subdivision thereof, including, but not limited to, any agency of the state, a county, a city, a district, an association of governments, or a joint power agency.~~

~~**GROSS EXTERIOR ROOF AREA** is the sum of the skylight area and the exterior roof/ceiling area.~~

~~**GROSS EXTERIOR WALL AREA** is the sum of the window area, door area, and exterior wall area.~~

~~**GROSS SALES FLOOR AREA** is the total area (in square feet) of retail store floor space that is (1) used for the display and sale of merchandise; or (2) associated with that function, including, but not limited to, sales transactions areas, fitting rooms, and circulation areas and entry areas within the space used for display and sale.~~

~~**GROSS SALES WALL AREA** is the area (in square feet) of the inside of exterior walls and permanent full height interior partitions within the gross sales floor area of a retail store that is used for the presentation of merchandise for sale, less the area of openings, doors, windows, baseboards, wainscots, mechanical or structural elements, and other obstructions preventing the use of the area for the presentation of merchandise.~~

~~**HABITABLE STORY** is a story that contains space in which humans may work or live in reasonable comfort, and that has at least 50 percent of its volume above grade.~~

~~**HEAT CAPACITY (HC)** of an assembly is the amount of heat necessary to raise the temperature of all the components of a unit area in the assembly one degree F. It is calculated as the sum of the average thickness times the density times the specific heat for each component, and is expressed in Btu per square foot per degree F.~~

~~**HEAT PUMP** is a device that is capable of heating by refrigeration, and that may include a capability for cooling.~~

~~**HEATING EQUIPMENT** is equipment used to provide mechanical heating for a room or rooms in a building.~~

~~**HEATING SEASONAL PERFORMANCE FACTOR (HSPF)** is the total heating output of a heat pump (in British thermal units) during its normal use period for heating divided by the total electrical energy input (in watt-hours) during the same period, as determined using the applicable test method in the Appliance Efficiency Regulations.~~

~~**HI** is the Hydronics Institute.~~

~~**HIGH BAY** is a space with luminaires 25 feet or more above the floor.~~

~~**HIGH-RISE RESIDENTIAL BUILDING** is a building, other than a hotel/motel, of occupancy group R-1 with four or more habitable stories.~~

~~**HORIZONTAL GLAZING** (See SKYLIGHT).~~

~~**HOTEL/MOTEL** is a building or buildings incorporating six or more guest rooms or a lobby serving six or more guest rooms, where the guest rooms are intended or designed to be used, or which are used, rented, or hired out to be occupied, or which are occupied for sleeping purposes by guests, and all conditioned spaces within the same building envelope. Hotel/motel also includes all conditioned spaces which are (1) on the same property as the hotel/motel, (2) served by the same central HVAC system as the hotel/motel, and (3) integrally related to the functioning of the hotel/motel as such, including, but not limited to, exhibition facilities, meeting and conference facilities, food service facilities, lobbies, and laundries.~~

~~**HVAC SYSTEM** (see SPACE CONDITIONING SYSTEM).~~

~~**ILLUMINATED FACE** is a side of an exit sign that has the word "EXIT" on it.~~

~~**INDIRECTLY CONDITIONED SPACE** is enclosed space including, but not limited to, unconditioned volume in atria, that (1) is not directly conditioned space; and (2) either (a) has an area-weighted heat transfer coefficient to directly conditioned space exceeding that to the outdoors or to unconditioned space, or (b) is a space through which air from directly conditioned spaces is transferred at a rate exceeding 3 air changes per hour.~~

~~**INFILTRATION** is uncontrolled inward air leakage from outside a building, or unconditioned space, including leakage through cracks and interstices, around windows and doors, and through any other exterior or demising partition or pipe or duct penetration.~~

~~**INTEGRATED PART LOAD VALUE (IPLV)** is a single number figure of merit based on part load EER or COP expressing part load efficiency for air-conditioning and heat pump equipment on the basis of weighted operation at various load capacities for the equipment as determined using the applicable test method in the Appliance Efficiency Regulations or Section 112.~~

~~**ISOLATION DEVICE** is a device that prevents the conditioning of a zone or group of zones in a building while other zones of the building are being conditioned.~~

~~**LOW BAY** is a space with luminaires less than 25 feet above the floor.~~

~~**LOW-RISE RESIDENTIAL BUILDING** is a building, other than a hotel/motel, that is of occupancy group R-1 and is three stories or less, or that is of occupancy group R-3.~~

~~**LPG** is Liqueified Petroleum Gas.~~

~~**LUMEN MAINTENANCE DEVICE** is a device capable of automatically adjusting the light output of a lighting system throughout a continuous range to provide a preset level of illumination.~~

~~**LUMINAIRE** is a complete lighting unit consisting of a lamp and the parts designed to distribute the light, to position and protect the lamp, and to connect the lamp to the power supply; commonly referred to as "lighting fixtures" or "instruments."~~
~~**MANUAL** is capable of being operated by personal intervention.~~

~~**MANUFACTURED DEVICE** is any heating, cooling, ventilation, lighting, water heating, refrigeration, cooking, plumbing fitting, insulation, door, fenestration product, or any other appliance, device, equipment, or system subject to Sections 110 through 119 of Title 24, Part 6.~~

~~**MANUFACTURED FENESTRATION PRODUCT** is a fenestration product typically assembled before delivery to a job site. "Knocked down" or partially assembled products sold as a fenestration product must be considered a manufactured fenestration product and meet the rating and labeling requirements for manufactured fenestration products.~~

~~**MECHANICAL COOLING** is lowering the temperature within a space using refrigerant compressors or absorbers, desiccant dehumidifiers, or other systems that require energy from depletable sources to directly condition the space. In nonresidential, high-rise residential, and hotel/motel buildings cooling of a space by direct or indirect evaporation of water alone is not considered mechanical cooling.~~

~~**MECHANICAL HEATING** is raising the temperature within a space using electric resistance heaters, fossil fuel burners, heat pumps, or other systems that require energy from depletable sources to directly condition the space.~~

~~**MODELING ASSUMPTIONS** are the conditions (such as weather conditions, thermostat settings and schedules, internal gain schedules, etc.) that are used for calculating a building's annual energy consumption and that are in the Alternative Calculation Methods Manuals.~~

~~**MOVABLE SHADING DEVICE** (See OPERABLE SHADING DEVICE).~~

~~**MULTI-SCENE DIMMING SYSTEM** is a lighting control device that has the capability of setting light levels throughout a continuous range, and that has pre-established settings within the range.~~

~~**NEWLY CONDITIONED SPACE** is any space being converted from unconditioned to directly conditioned or indirectly conditioned space. Newly conditioned space must comply with the requirements for an addition. See Section 149 for nonresidential occupancies and Section 152 for residential occupancies.~~

~~**NONRESIDENTIAL BUILDING** is any building which is of occupancy group A, B, E, or H.~~

~~NOTE: Requirements for high-rise residential buildings and hotels/motels are included in the nonresidential sections of Title 24, Part 6.~~

~~**NONRESIDENTIAL MANUAL** is the manual developed by the Commission, under Section 25402.1(e) of the Public Resources Code, to aid designers, builders and contractors in meeting the energy efficiency requirements for nonresidential, high-rise residential, and hotel/motel buildings.~~

~~**NORTH-FACING** is oriented to within 45 degrees of true north, including 45°00'00" east of north (NE), but excluding 45°00'00' west of north (NW).~~

~~**OCCUPANCY SENSOR, LIGHTING** is a device that automatically turns lights off soon after an area is vacated.~~

~~**OCCUPANCY TYPE** is one of the following:~~

~~*AUDITORIUM:* The part of a public building where an audience sits in fixed seating, or a room, area, or building with fixed seats used for public meetings or gatherings not specifically for the viewing of dramatic performances.~~

~~*AUTO REPAIR:* The portion of a building used to repair automotive equipment and/or vehicles, exchange parts, and may include work using an open flame or welding equipment.~~

~~*BANK/FINANCIAL INSTITUTION:* An area in a public establishment for conducting financial transactions including the custody, loan, exchange, or issue of money, for the extension of credit, and for facilitating the transmission of funds.~~

~~*CLASSROOM, LECTURE, OR TRAINING:* A room or area where an audience or class receives instruction.~~

~~*COMMERCIAL AND INDUSTRIAL STORAGE:* A room, area, or building used for storing items.~~

~~*CONVENTION, CONFERENCE, MULTIPURPOSE AND MEETING CENTERS:* An assembly room, area, or building that is used for meetings, conventions and multiple purposes including, but not limited to, dramatic performances, and that has neither fixed seating nor fixed staging.~~

~~*CORRIDOR:* A passageway or route into which compartments or rooms open.~~

~~*DINING:* A room or rooms in a restaurant or hotel/motel (other than guest rooms) where meals that are served to the customers will be consumed.~~

~~*ELECTRICAL/MECHANICAL ROOM:* A room in which the building's electrical switchbox or control panels, and/or HVAC controls or equipment is located.~~

~~*EXERCISE CENTER/GYMNASIUM:* A room or building equipped for gymnastics, exercise equipment, or indoor athletic activities.~~

~~*EXHIBIT:* A room or area that is used for exhibitions that has neither fixed seating nor fixed staging.~~

~~*GENERAL COMMERCIAL AND INDUSTRIAL WORK:* A room, area, or building in which an art, craft, assembly or manufacturing operation is performed.~~

~~*HIGH BAY:* Luminaires 25 feet or more above the floor.~~

~~*LOW BAY:* Luminaires less than 25 feet above the floor.~~

~~*GROCERY STORE:* A room, area, or building that has as its primary purpose the sale of foodstuffs requiring additional preparation prior to consumption.~~

~~*HOTEL FUNCTION AREA:* A hotel room or area such as a hotel ballroom, meeting room, exhibit hall, or conference room, together with prefunction areas and other spaces ancillary to its function.~~

~~*HOTEL LOBBY:* The contiguous spaces in a hotel/motel between the main entrance and the front desk, including waiting and seating areas, and other spaces encompassing the activities normal to a hotel lobby function.~~

~~*KITCHEN/FOOD PREPARATION:* A room or area with cooking facilities and/or an area where food is prepared.~~

~~*LAUNDRY:* A place where laundering activities occur.~~

~~*LIBRARY:* A repository for literary materials, such as books, periodicals, newspapers, pamphlets and prints, kept for reading or reference.~~

~~*LOCKER/DRESSING ROOM:* A room or area for changing clothing, sometimes equipped with lockers.~~

~~*LOUNGE/RECREATION:* A room used for leisure activities which may be associated with a restaurant or bar.~~

~~*MAIN ENTRY LOBBY/RECEPTION/WAITING:* The lobby of a building that is directly located by the main entrance of the building and includes the reception area, sitting areas, and public areas.~~

~~*MALLS, ARCADES AND ATRIA:* A public passageway or concourse that provides access to rows of stores or shops.~~

~~*MEDICAL AND CLINICAL CARE:* A room, area, or building that does not provide overnight patient care and that is used to promote the condition of being sound in body or mind through medical, dental, or psychological examination and treatment, including, but not limited to, laboratories and treatment facilities.~~

~~*MUSEUM:* A space in which works of artistic, historical, or scientific value are cared for and exhibited.~~

~~*OFFICE:* A room, area, or building of UBC group B occupancy other than restaurants.~~

~~*PRECISION COMMERCIAL OR INDUSTRIAL WORK:* A room, area, or building in which an art, craft, assembly or manufacturing operation is performed involving visual tasks of small size or fine detail such as electronic assembly, fine woodworking, metal lathe operation, fine hand painting and finishing, egg processing operations, or tasks of similar visual difficulty.~~

~~*RECEPTION/WAITING AREA:* An area where customers or clients are greeted prior to conducting business.~~

~~*RELIGIOUS WORSHIP:* A room, area, or building for worship.~~

~~*RESTAURANT:* A room, area, or building that is a food establishment as defined in Section 27520 of the Health and Safety Code.~~

~~*RESTROOM:* A room or suite of rooms providing personal facilities such as toilets and washbasins.~~

~~*RETAIL AND SALES:* A room, area, or building in which the primary activity is the sale of merchandise.~~

~~*SCHOOL:* A building or group of buildings that is predominately classrooms and that is used by an organization that provides instruction to students.~~

~~*STAIRS, ACTIVE/INACTIVE:* A series of steps providing passage from one level of a building to another~~

~~*SUPPORT AREAS:* A room or area used as a passageway, utility room, storage space, or other type of space associated with or secondary to the function of an occupancy that is listed in these regulations.~~

~~*THEATER, MOTION PICTURE:* An assembly room, hall, or building with tiers of rising seats or steps for the showing of motion pictures.~~

~~*THEATER, PERFORMANCE:* An assembly room, hall, or building with tiers of rising seats or steps for the viewing of dramatic performances, lectures, musical events and similar live performances.~~

~~*VOCATIONAL ROOM:* A room used to provide training in a special skill to be pursued as a trade.~~

~~*WHOLESALE SHOWROOM:* A room where samples of merchandise are displayed.~~

~~**OPERABLE SHADING DEVICE** is a device at the interior or exterior of a building or integral with a fenestration product, which is capable of being operated, either manually or automatically, to adjust the amount of solar radiation admitted to the interior of the building.~~

~~**OPTIMAL OVERHANG** is an overhang that completely shades the glazing at solar noon on August 21 and substantially exposes the glass at solar noon on December 21.~~

~~**ORNAMENTAL CHANDELIERS** are ceiling-mounted, close-to-ceiling, or suspended decorative luminaires that use glass, crystal, ornamental metals, or other decorative material and that typically are used in hotel/motels, restaurants, or churches as a significant element in the interior architecture.~~

~~**OUTDOOR AIR** (Outside air) is air taken from outdoors and not previously circulated in the building.~~

~~**OVERALL HEAT GAIN** is the value obtained in Section 143(b)2 for determining compliance with the component envelope approach.~~

~~**OVERALL HEAT LOSS** is the value obtained in Section 143(b)1 for determining compliance with the component envelope approach.~~

~~**PLENUM** is an air compartment or chamber, including uninhabited crawl space, areas above a ceiling or below a floor, including air spaces below raised floors of computer/data processing centers, or attic spaces, to which one or more ducts are connected and which forms part of either the supply-air, return-air or exhaust air system, other than the occupied space being conditioned.~~

~~**POOR QUALITY LIGHTING TASKS** are visual tasks that require illuminance category "E" or greater, because of the choice of a writing or printing method that produces characters that are of small size or lower contrast than good quality alternatives that are regularly used in offices.~~

~~**PRIVATE OFFICE** or **WORK AREA** is an office bounded by 30-inch or higher partitions and is no more than 200 square feet.~~

~~**PROCESS** is an activity or treatment that is not related to the space conditioning, lighting, service water heating, or ventilating of a building as it relates to human occupancy.~~

~~**PROCESS LOAD** is a load resulting from a process.~~

~~**PUBLIC AREAS** are spaces generally open to the public at large, customers, congregation members, or similar spaces, where occupants need to be prevented from controlling lights for safety, security, or business reasons.~~

~~**PUBLIC FACILITY RESTROOM** is a restroom designed for use by the public.~~

~~**RAISED FLOOR** is a floor (partition) over a crawl space, or an unconditioned space, or ambient air.~~

~~**RADIANT BARRIER** is any reflective material that has an emittance of 0.05 or less, tested in accordance with ASTM C-1371-98, and that is certified to the California Department of Consumer Affairs.~~

~~**READILY ACCESSIBLE** is capable of being reached quickly for operation, repair, or inspection, without requiring climbing or removing obstacles, or resorting to access equipment.~~

~~**RECOOL** is the cooling of air that has been previously heated by space conditioning equipment or systems serving the same building.~~

~~**RECOVERED ENERGY** is energy used in a building that (1) is mechanically recovered from space conditioning, service water heating, lighting, or process equipment after the energy has performed its original function; (2) provides space conditioning, service water heating, or lighting; and (3) would otherwise be wasted.~~

~~**REDUCED FLICKER OPERATION** is the operation of a light, in which the light has a visual flicker less than 30% for frequency and modulation.~~

~~**REFERENCE COMPUTER PROGRAM** is the DOE 2.1E program, version 86. Note that the ***reference computer program*** is only part of the ***reference method*** which is the official set of procedures and additional calculational algorithms, that uses the the official rules and assumptions along with the ***reference computer program*** to manipulate required inputs to:~~

~~1) describe the salient, energy-consuming features of a proposed building design; and to~~

~~2) create and describe relevant energy-consuming aspects of a standard building design that meets the prescriptive building energy efficiency standards; and to~~

~~3) simulate both proposed and standard building designs and determine if the energy consumption of the proposed building is less than the standard building; and to~~

~~4) print a specific set of required compliance forms if and only if the calculated energy budget for the standard building design is greater than the proposed building design.~~

~~In the absence of other information to the contrary, the ***reference method*** is described in the most detail in the ***reference method*** input files in the Supplement to this manual.~~

~~**REHEAT** is the heating of air that has been previously cooled by cooling equipment or systems or an economizer.~~

~~**RELATIVE SOLAR HEAT GAIN** is the ratio of solar heat gain through a fenestration product (corrected for external shading) to the incident solar radiation. sSolar heat gain includes directly transmitted solar heat and absorbed solar radiation, which is then reradiated, conducted, or convected into the space.~~

~~**REPAIR** is the reconstruction or renewal of any part of an existing building for the purpose of its maintenance. Note: Repairs to low-rise residential buildings are not within the scope of these standards.~~

~~**RESIDENTIAL BUILDING** (See HIGH-RISE RESIDENTIAL BUILDING and LOW-RISE RESIDENTIAL BUILDING).~~

~~**RESIDENTIAL MANUAL** is the manual developed by the Commission, under Section 25402.1(c) of the Public Resources Code, to aid designers, builders, and contractors in meeting energy efficiency standards for low-rise residential buildings.~~

~~**ROOF** is the exterior surface on the top of a building, which has a slope less than 60 degrees from horizontal.~~

~~**ROOF/CEILING TYPE** is a roof/ceiling assembly having a specific framing type and U-factor U-value.~~

~~**ROOM CAVITY RATIO (RCR)** is:~~

~~(a) for rectangular rooms~~ $\frac{5 \times H \times (L + W)}{L \times W}$

~~or~~

~~(b) for irregular shaped rooms~~ $\frac{2.5 \times H \times P}{A}$

~~Where:~~

~~L = Length of room~~
~~W = Width of room~~
~~H = Vertical distance from the work plane to the center line of the lighting fixture~~
~~P = Perimeter of room~~
~~A = Area of room~~

~~**RUNOUT** is piping that is no more than 12 feet long and that is connected to a fixture or an individual terminal unit.~~

~~**SCONCE** is a wall mounted decorative light fixture.~~

~~**SEASONAL ENERGY EFFICIENCY RATIO (SEER)** means the total cooling output of a central air conditioner in British thermal units during its normal usage period for cooling divided by the total electrical energy input in watt-hours during the same period, as determined using the applicable test method in the Appliance Efficiency Regulations.~~

~~**SEMI-CONDITIONED SPACE** is an enclosed nonresidential space that is provided with wood heating, cooling by direct or indirect evaporation of water, mechanical heating that has a capacity of 10 Btu/(hr-ft²) or less, mechanical cooling that has a capacity of 5 Btu/(hr-ft²) or less, or is maintained for a process environment as set forth in the definition of DIRECTLY CONDITIONED SPACE.~~

~~**SERVICE WATER HEATING** is heating of water for sanitary purposes for human occupancy, other than for comfort heating.~~

~~**SHADING** is the protection from heat gains because of direct solar radiation by permanently attached exterior devices or building elements, interior shading devices, glazing material, or adherent materials. Permanently attached means (a) attached with fasteners that require additional tools to remove (as opposed to clips, hooks, latches, snaps, or ties); or (b) required by the UBC for emergency egress to be removable from the interior without the use of tools.~~

~~**SHADING COEFFICIENT (SC)** is the ratio of the solar heat gain through a fenestration product to the solar heat gain through an unshaded 1/8 inch thick clear double strength glass under the same set of conditions. For nonresidential, high-rise residential, and hotel/motel buildings, this shall exclude the effects of mullions, frames, sashes, and interior and exterior shading devices.~~

~~**SITE-ASSEMBLED FENESTRATION** includes both field-fabricated fenestration and site-built fenestration.~~

~~**SITE-BUILT FENESTRATION PRODUCTS** are fenestration products designed to be field-glazed or field assembled units comprised of specified framing and glazing components. Site-built fenestration is eligible for certification under NFRC 100-SB, and may include both vertical glazing and horizontal glazing.~~

~~**SITE SOLAR ENERGY** is natural daylighting, or thermal, chemical, or electrical energy derived from direct conversion of incident solar radiation at the building site.~~

~~**SKYLIGHT** is glazing having a slope less than 60 degrees from the horizontal with conditioned space below, except for purposes of complying with Section 151(f), where a skylight is glazing having a slope not exceeding 4.76 degrees (1:12) from the horizontal.~~

~~**SKYLIGHT AREA** is the area of the surface of a skylight, plus the area of the frame, sash, and mullions.~~

~~**SKYLIGHT TYPE** is a type of skylight assembly having a specific solar heat gain coefficient, whether translucent or transparent, and U-value U-factor, whether glass mounted on a curb, glass not mounted on a curb or plastic (assumed to be mounted on a curb).~~

~~**SMACNA** is the Sheet Metal and Air-conditioning Contractors National Association.~~

~~**SOLAR HEAT GAIN COEFFICIENT (SHGC)** is the ratio of the solar heat gain entering the space through the fenestration area to the incident solar radiation. Solar heat gain includes directly transmitted solar heat and absorbed solar radiation, which is then reradiated, conducted, or convected into the space.~~

~~**SOURCE ENERGY** is the energy that is used at a site and consumed in producing and in delivering energy to a site, including, but not limited to, power generation, transmission, and distribution losses, and that is used to perform a specific function, such as space conditioning, lighting or water heating. Table 1-B contains the conversion factors for converting site to source energy.~~

~~**SOUTH-FACING** is oriented to within 45 degrees of true south including 45°00'00" west of south (SW), but excluding 45°00'00" east of south (SE).~~

~~**SPA** is a vessel that contains heated water, in which humans can immerse themselves, is not a pool, and is not a bathtub.~~

~~**SPACE CONDITIONING SYSTEM** is a system that provides either collectively or individually heating, ventilating, or cooling within or associated with conditioned spaces in a building.~~

~~**SPECIFIC HEAT** is the quantity of heat that must be supplied to a unit mass of the material to increase its temperature by one degree as documented in an ASHRAE handbook, a comparably reliable reference or manufacturer's literature.~~

~~**SYSTEM** is a combination of equipment, controls, accessories, interconnecting means, or terminal elements, by which energy is transformed to perform a specific function, such as space conditioning, service water heating, or lighting.~~

~~**TASK-ORIENTED LIGHTING** is lighting that is designed specifically to illuminate a task location, and that is generally confined to the task location.~~

~~**THERMAL CONDUCTIVITY** is the quantity of heat that will flow through a unit area of the material per hour when the temperature difference through the material is one degree as documented in an ASHRAE handbook, a comparably reliable reference or manufacturer's literature.~~

~~**THERMAL MASS** is solid or liquid material used to store heat for later heating use or for reducing cooling requirements.~~

~~**THERMAL RESISTANCE (R)** is the resistance of a material or building component to the passage of heat in hr-ft^2-°F/Btu.~~

~~**THERMOSTATIC EXPANSION VALVE (TXV)** is a refrigerant metering valve, installed in an air conditioner or heat pump, which controls the flow of liquid refrigerant entering the evaporator in response to the superheat of the gas leaving it.~~

~~**THROW DISTANCE** is the distance between the luminaire and the center of the plane lit by the luminaire on a display.~~

~~**TUNING** is a lighting control device that allows authorized personnel only to select a single light level within a continuous range.~~

~~**UBC** is the 1994 edition of the state-adopted Uniform Building Code, Title 24.~~

~~**UL** is the Underwriters Laboratory.~~

~~**UMC** is the 1997 edition of the state-adoted Uniform Mechanical Code.~~

~~**UNCONDITIONED SPACE** is enclosed space within a building that is not directly conditioned, indirectly conditioned, or semi-conditioned space.~~

~~**UNIT INTERIOR MASS CAPACITY (UIMC)** is the amount of effective heat capacity per unit of thermal mass, taking into account the type of mass material, thickness, specific heat, density and surface area.~~

~~**U-VALUE** **U-FACTOR** is the overall coefficient of thermal transmittance of a construction assembly, in Btu/h-ft^2-°F, including air film resistance at both surfaces.~~

~~**VAPOR BARRIER** is a material that has a permeance of one perm or less and that provides resistance to the transmission of water vapor.~~

~~**VARIABLE AIR VOLUME (VAV) SYSTEM** is a space conditioning system that maintains comfort levels by varying the volume of conditioned air to the zones served.~~

~~**VERTICAL GLAZING** (See "window")~~

~~**VERY VALUABLE MERCHANDISE** is rare or precious objects, including, but not limited to, jewelry, coins, small art objects, crystal, china, ceramics, or silver, the selling of which involves customer inspection of very fine detail from outside of a locked case.~~

~~**VISIBLE LIGHT TRANSMITTANCE (VLT)** is the ratio (expressed as a decimal) of visible light that is transmitted through a glazing material to the light that strikes the material.~~

~~**WALL TYPE** is a wall assembly having a specific heat capacity, framing type, and U-value U-factor.~~

~~**WELL INDEX** is the ratio of the amount of visible light leaving a skylight well to the amount of visible light entering the skylight well and is calculated as follows:~~

~~(a) for rectangular wells:~~

~~or~~

~~(b) for irregular shaped wells:~~

~~Where the length, width, perimeter, and area are measured at the bottom of the well, and R is the weighted average reflectance of the walls of the well.~~

~~**WEST-FACING** is oriented to within 45 degrees of true west, including 45°00'00" north of due west (NW), but excluding 45°00'00" south of west (SW).~~

~~**WINDOW** is glazing that is not a skylight.~~

~~**WINDOW AREA** is the area of the surface of a window, plus the area of the frame, sash, and mullions.~~

~~**WINDOW TYPE** is a window assembly having a specific solar heat gain coefficient, relative solar heat gain, and U-value U-factor.~~

~~**WINNDOW WALL RATIO** is the ratio of the window area to the gross exterior wall area.~~

~~**WOOD HEATER** is an enclosed wood burning appliance used for space heating and/or domestic water heating, and which meets the definition in Federal Register, Volume 52, Number 32, February 18, 1987.~~

~~**WOOD STOVE** (See WOOD HEATER).~~

~~**ZONE, LIGHTING** is a space or group of spaces within a building that has sufficiently similar requiremnts so that lighting can be automatically controlled in unison throughout the zone by an illumination controlling device or devices, and does not exceed one floor.~~

~~Appendix E:~~

~~Approved Forms~~

~~Appendix E: Approved Forms~~

PERFORMANCE CERTIFICATE OF COMPLIANCE (Part 1 of 3) PERF-1

PROJECT NAME		DATE
PROJECT ADDRESS		Building Permit #
PRINCIPAL DESIGNER-ENVELOPE	TELEPHONE	
DOCUMENTATION AUTHOR	TELEPHONE	Checked by/Date Enforcement Agency Use

GENERAL INFORMATION

DATE OF PLANS	BUILDING CONDITIONED FLOOR AREA	CLIMATE ZONE

BUILDING TYPE	☐ NONRESIDENTIAL	☐ HIGH RISE RESIDENTIAL		☐ HOTEL/MOTEL GUEST ROOM
PHASE OF CONSTRUCTION	☐ NEW CONSTRUCTION	☐ ADDITION	☐ ALTERATION	☐ EXISTING + ADDITION

STATEMENT OF COMPLIANCE

This Certificate of Compliance lists the building features and performance specifications needed to comply with Title 24, Parts 1 and 6 of the State Building Code. This certificate applies only to a building using the performance compliance approach.

DOCUMENTATION AUTHOR	SIGNATURE	DATE

The Principal Designers hereby certify that the proposed building design represented in the construction documents and modeled for this permit application are consistent with all other forms and worksheets, specifications, and other calculations submitted with this permit application. The proposed building as designed meets the energy efficiency requirements of the State Building Code, Title 24, Part 6.

ENV.	LTG.	MECH.	
☐	☐	☐	1. I hereby affirm that I am eligible under the provisions of Division 3 of the Business and Professions Code to sign this document as the person responsible for its preparation; and that I am licensed in the State of California as a civil engineer, mechanical engineer (envelope & mechanical only), or electrical engineer (lighting only) or I am a licensed architect.
☐	☐	☐	2. I affirm that I am eligible under the provisions of Division 3 of the Business and Professions Code Section 5537.2 or 6737.3 to sign this document as the person responsible for its preparation; and that I am a licensed contractor performing this work.
☐	☐	☐	3. I affirm that I am eligible under Division 3 of the Business and Professions Code to sign this document because it pertains to a structure or type of work described as exempt pursuant to Business and Professions Code Sections 5537, 5538 and 6737.1. (These sections of the Business and Professions Code are printed in full in the Nonresidential Manual.)

ENVELOPE COMPLIANCE

Indicate location on plans of Note Block for Mandatory Measures:

Required Forms:		TELEPHONE	
LICENSED ENGINEER/ARCHITECT/CONTRACTOR – NAME	SIGNATURE	LIC. NO.	DATE

LIGHTING COMPLIANCE

Indicate location on plans of Note Block for Mandatory Measures:

Required Forms:		TELEPHONE	
LICENSED ENGINEER/ARCHITECT/CONTRACTOR – NAME	SIGNATURE	LIC. NO.	DATE

MECHANICAL COMPLIANCE

Indicate location on plans of Note Block for Mandatory Measures:

Required Forms:		TELEPHONE	
LICENSED ENGINEER/ARCHITECT/CONTRACTOR – NAME	SIGNATURE	LIC. NO.	DATE

Run Initiation Time: **Run Code:**

PERFORMANCE CERTIFICATE OF COMPLIANCE (Part 2 of 3) PERF-1

PROJECT NAME	DATE

ANNUAL SOURCE ENERGY USE SUMMARY (kBtu/sqft-yr)

ENERGY COMPONENT	Standard Design	Proposed Design	Compliance Margin
Space Heating			
Space Cooling			
Indoor Fans			
Heat Rejection			
Pumps			
Domestic Hot Water			
Lighting			
Receptacle			
Process			
TOTALS:			

BUILDING COMPLIES

GENERAL INFORMATION

Building Orientation		Conditioned Floor Area	
Number of Stories		Unconditioned Floor Area	
Number of Systems			
Number of Zones			

	Orientation	Gross Area		Glazing Area		Glazing Ratio
Front Elevation			sqft		sqft	
Left Elevation			sqft		sqft	
Rear Elevation			sqft		sqft	
Right Elevation			sqft		sqft	
Total			sqft		sqft	
Roof			sqft		sqft	

	Standard		Proposed	
Lighting Power Density		W/sqft		W/sqft
Perscriptive Env. Heat Loss				
Perscriptive Env. Heat Gain				

PERFORMANCE CERTIFICATE OF COMPLIANCE (Part 3 of 3) PERF-1

PROJECT NAME	DATE

ZONE INFORMATION

System Name	Zone Name	Occupancy Type	Floor Area (sqft.)	Installed LPD (W/sf)[1]	Control Credits (W/sf)[1]	Tailored		Process Loads (W/sf)[3]
						LPD (W/sf)[2]	Vent. (cfm/sf)[3]	

Notes: 1. See LTG-1 **2.** Provide Tailored Lighting Forms & Lighting Plans for Tailored LPD **3.** Provide Supporting Documentation

EXCEPTIONAL CONDITIONS COMPLIANCE CHECKLIST

The local enforcement agency should pay special attention to this checklist. These items require special written justification and documentation, and special verification to be used with the performance approach. The local enforcement agency determines the adequacy of the justification, and may reject a building or design that otherwise complies based on the adequacy of the special justification and documentation submitted.

	PLAN	FIELD

The exceptional features listed in this performance approach application have specifically been reviewed. Adequate written justification and documentation for their use have been provided by the applicant.

Authorized Signature or Stamp _____

Run Initiation Time: **Run Code:**

ENVELOPE COMPLIANCE SUMMARY Performance ENV-1

PROJECT NAME	DATE

OPAQUE SURFACES

#	Surface Type	Construction Type (e.g., Block, Wood, Metal)	Area	U-factor	Azimuth	Tilt	Solar Gains Y/N	Form 3	Location / Comments (e.g., Suspended Ceiling, Demising, etc.)
							☐ ☐		
							☐ ☐		
							☐ ☐		
							☐ ☐		
							☐ ☐		
							☐ ☐		
							☐ ☐		
							☐ ☐		
							☐ ☐		
							☐ ☐		
							☐ ☐		

FENESTRATION SURFACES

Site Assembled Glazing

☐ – Check box if Building is ≥100,000 ft² of CFA and ≥10,000 ft² of vertical glazing then NFRC Certification is required. Follow NFRC 100-SB Procedures and submit NFRC Label Certificate Form.

Fenestration Type	Area	U-factor	Azimuth	SHGC	Glazing Type	Location / Comments	NOTES TO FIELD – For Bldg. Dept. Use Only

EXTERIOR SHADING

Fenestration #	Exterior Type	SHGC	Window		Overhang				Left Fin			Right Fin		
			Height	Width	Length	Height	LExt.	RExt.	Dist.	Length	Height	Dist.	Length	Height

CERTIFICATE OF COMPLIANCE SUMMARY Performance (Part 1 of 2) MECH-1

PROJECT NAME	DATE

SYSTEM FEATURES

SYSTEM NAME	MECHANICAL SYSTEMS			NOTE TO FIELD Bldg. Dept. Use
TIME CONTROL				
SETBACK CONTROL				
ISOLATION ZONES				
HEAT PUMP THERMOSTAT?				
ELECTRIC HEAT?				
FAN CONTROL				
VAV MINIMUM POSITION CONTROL?				
SIMULTANEOUS HEAT/COOL?				
HEAT AND COOL SUPPLY RESET?				
HEAT REJECTION CONTROL				
VENTILATION				
OUTDOOR DAMPER CONTROL?				
ECONOMIZER TYPE				
DESIGN O.A. CFM (MECH-3, COLUMN H)				
HEATING EQUIPMENT TYPE				
HIGH EFFICIENCY? / IF YES ENTER EFF. #				
MAKE AND MODEL NUMBER				
COOLING EQUIPMENT TYPE				
HIGH EFFICIENCY? / IF YES ENTER EFF. #				
MAKE AND MODEL NUMBER				
PIPE INSULATION REQUIRED?				
PIPE/DUCT INSULATION PROTECTED?				
HEATING DUCT LOCATION / R-VALUE				
COOLING DUCT LOCATION / R-VALUE				
VERIFIED SEALED DUCTS IN CEILING/ROOF SPACE / %FAN FLOW				

CODE TABLES: Enter code from table below into columns above.

	Y:Yes	N:No
HEAT PUMP THERMOSTAT?		
ELECTRIC HEAT?		
VAV MINIMUM POSITION CONTROL?		
SIMULTANEOUS HEAT/COOL?		
HEAT AND COOL SUPPLY RESET?		
HIGH EFFICIENCY?		
PIPE INSULATION REQUIRED?		
PIPE/DUCT INSULATION PROTECTED?		
SEALED DUCTS IN CEILING/ROOF SPACE?		

TIME CONTROL	SETBACK CTRL.	ISOLATION ZONES	FAN CONTROL
S: Prog. Switch O: Occupancy Sensor M: Manual Timer	H: Heating C: Cooling B: Both	Enter number of Isolation Zones	: Inlet Vanes P: Variable Pitch V: VFD O: Other C: Curve
VENTILATION	**OUTDOOR DAMPER**	**ECONOMIZER**	**O.A. CFM**
B: Air Balance C: Outside Air Cert. M: Outside Air Measure D: Demand Control N: Natural	A: Auto G: Gravity	A: Air W: Water N: Not Required EC: Economizer Control See Section	Enter Design Outdoor Air CFM. Note: This shall be no less than Column H on

Run Initiation Time: **Run Code:**

NOTES TO FIELD – For Building Department Use Only

		144(c)3	MECH-3.

MECHANICAL COMPLIANCE SUMMARY Performance (Part 2 of 2) MECH-1

PROJECT NAME	DATE

DUCT INSULATION

SYSTEM NAME	HEATING DUCTS		COOLING DUCTS	
	LOCATION	R-VAL	LOCATION	R-VAL

NOTES TO FIELD - For Building Department Use Only

PIPE INSULATION

DUCT TAPE ALLOWED?	
Y	N

I	
R	

~~PIPE TYPE~~ ~~(Supply, Return, etc.)~~

Run Initiation Time: **Run Code:**

MECHANICAL EQUIPMENT SUMMARY Performance (Part 1 of 2) MECH-2

PROJECT NAME	DATE

CHILLER AND TOWER SUMMARY

					PUMPS					
Equipment Name	Equipment Type	Qty.	Efficiency	Tons	Total Qty.	GPM	BHP	Motor Eff.	Drive Eff.	Pump Control

DHW / BOILER SUMMARY

						Energy Factor or Recovery Efficiency	Standby Loss or Pilot	TANK INSUL.
System Name	System Type	Distribution Type	Qty.	Rated Input	Vol. (Gals.)			Ext. R-Val

CENTRAL SYSTEM RATINGS

			HEATING			COOLING			
System Name	System Type	Qty.	Output	Aux. kW	Efficiency	Output	Sensible	Efficiency	Economizer type

CENTRAL FAN SUMMARY

			SUPPLY FAN				RETURN FAN			
System Name	Fan Type	Motor Location	CFM	BHP	Motor Eff.	Drive Eff.	CFM	BHP	Motor Eff.	Drive Eff.

MECHANICAL EQUIPMENT SUMMARY Performance (Part 2 of 2) MECH-2

PROJECT NAME	DATE

VAV SUMMARY

	VAV					FAN					BASEBOARD	
Zone Name	System Type	Qty.	Min. CFM Ratio	Reheat? Type	DT	Flow Ratio	CFM	BHP	Motor Eff.	Drive Eff.	Type	Output

EXHAUST FAN SUMMARY

EXHAUST FAN						EXHAUST FAN					
Room Name	Qty.	CFM	BHP	Motor Eff.	Drive Eff.	Room Name	Qty.	CFM	BHP	Motor Eff.	Drive Eff.

Run Initiation Time: **Run Code:**

MECHANICAL COMPLIANCE SUMMARY Performance MECH-3

PROJECT NAME	DATE

MECHANICAL VENTILATION

A	B	C	D	E	F	G	H	I	J	K
	AREA BASIS			OCCUPANCY BASIS			REQ'D. O.A. (MAX. OF D OR G)	DESIGN OUTDOOR AIR CFM	VAV MIN. CFM	TRANFER AIR CFM
ZONE/SYSTEM	COND AREA (SF)	CFM PER SF	MIN. CFM (B X C)	NO. OF PEOPLE	CFM PER PERSON	MIN. CFM (E X F)				

C Minimum ventilation rate per Section § 121, Table 1-F.

E Based on expected number of occupants or at least 50% of Chapter 10 1997 UBC occupant density

T Must be greater than or equal to H, or use Transfer Air. Design outdoor air includes ventilation from supply air system & exhaust fans which operate at design conditions.

K Must be greater than or equal to (H - I), and, for VAV, greater than or equal to (H - J).

MECHANICAL DISTRIBUTION SUMMARY PERFORMANCE USE ONLY MECH-5

PROJECT NAME	DATE
SITE ADDRESS	PERMIT NUMBER

VERIFIED DUCT TIGHTNESS BY INSTALLER

☐ **DUCT LEAKAGE REDUCTION Pressurization Test Results (Aerosol or Manual Sealing) CFM @ 25 PA**

	Measured Values
Test Leakage (CFM)	

Fan Flow

If Fan Flow is Calculated as 400 cfm/ton x number of tons, or as 21.7 x Heating Capacity in Thousands of Btu/hr, enter calculated value here	
If Fan Flow is Measured, enter measured value here	
Leakage Fraction = Test Leakage / (Calculated or Measured Fan Flow)	
Check Box for Pass or Fail (Pass = 6% or less of Leakage Fraction)	☐ Pass ☐ Fail

Tests Performed	Signature Date	Installing Subcontractor (Co. Name) **OR** General Contractor (Co. Name)

HERS RATER COMPLIANCE STATEMENT

☐ BUILDING TESTED Pressurization Test Results (Aerosol or Manual Sealing) CFM @ 25 PA

As the HERS rater providing diagnostic testing and field verification, I certify that the building identified on this form complies with the diagnostic tested compliance requirements as checked on this form.

Supply Duct R-value _____(R-value 4.2 or greater)
Return Duct R-value _____(R-value 4.2 or greater)

☐ Distribution system is fully ducted (i.e., does not use building cavities as plenums or platform returns in lieu of ducts)

☐ Where cloth backed, rubber adhesive duct tape is installed, mastic and drawbands are used in combination with cloth backed, rubber adhesive duct tape to seal leaks at duct connections.

☐ Minimum Requirements for Duct Leakage Reduction Compliance Credit

	Measured Values
Test Leakage (CFM)	

Fan Flow

If Fan Flow is Calculated as 400 cfm/ton x number of tons, or as 21.7 x Heating Capacity in Thousands of Btu/hr, enter calculated value here	
If Fan Flow is Measured, enter measured value here	
Leakage Fraction = Test Leakage / (Calculated or Measured Fan Flow)	
Check Box for Pass or Fail (Pass = 6% or less of Leakage Fraction)	☐ Pass ☐ Fail

Tests Performed	Signature Date	HERS Rater (Name)

Run Initiation Time: **Run Code:**

~~**COPY TO**: Building Department, HERS Provider (if applicable), and Building Owner at Occupancy~~

CERTIFICATE OF COMPLIANCE Performance (Part 1 of 2) LTG-1

PROJECT NAME	DATE

INSTALLED LIGHTING SCHEDULE

		LAMPS			BALLAST		LUMINAIRE		TOTAL WATTS
Name	LUMINAIRE DESCRIPTION	Type DESCRIPTION	No. of Lamps	Watts Per Lamp	Type DESCRIPTION	No. of Ballast	No. of Lumin.	Watts/ Lumin.	

Lighting Schedule on Plans Shows Exterior Lighting Meets

☐ Efficacy and Control Requirement of § 130(c)

☐ Control Requirements of § 131(f)

SUBTOTAL FROM THIS PAGE	
PLUS SUBTOTAL FROM CONTINUATION PAGE	
PORTABLE LIGHTING (From LTG-1 Part 3 of 3)	
LESS CONTROL CREDIT WATTS (From LTG-3)	
ADJUSTED ACTUAL WATTS	

MANDATORY AUTOMATIC CONTROLS

CONTROL LOCATION (Room #)	CONTROL IDENTIFICATION	CONTROL TYPE (Auto Time Switch, Exterior, etc.)	SPACE CONTROLLED	NOTE TO FIELD

CONTROLS FOR CREDIT

CONTROL LOCATION (Room # or Dwg. #)	CONTROL IDENTIFICATION	CONTROL TYPE (Occupant, Daylight, Dimming, etc.)	LUMINAIRES CONTROLLED		NOTE TO FIELD
			TYPE	# OF LUMINAIRES	

NOTES TO FIELD - For Building Department Use Only

Run Initiation Time: **Run Code:**

PORTABLE LIGHTING WORKSHEET Performance (Part 2 of 2) LTG-1

PROJECT NAME	DATE

TABLE 1A - PORTABLE LIGHTING NOT SHOWN ON PLANS FOR OFFICE AREAS > 250 SQUARE FEET

A	B	C	D
ROOM # OR ZONE ID	DEFAULT	AREA (SF)	TOTAL WATTS (B X C)
	0.2		
	0.2		
	0.2		
	0.2		
	0.2		
	0.2		
	TOTAL		

TABLE 1B - PORTABLE LIGHTING SHOWN ON PLANS FOR OFFICE AREAS > 250 SQUARE FEET

A	B	C	D	E	F	G
ROOM # OR ZONE ID	PORTABLE LIGHTING DESCRIPTION(S) PER TASK AREA	LUMINAIRE(S) WATTS PER TASK AREA	TASK AREA (SF)	NUMBER OF TASK AREAS	TOTAL AREA (SF) (D X E)	TOTAL WATTS (C X E)
				TOTAL		

TABLE 1C - PLANS SHOW PORTABLE LIGHTING IS NOT REQUIRED FOR OFFICE AREAS > 250 SQUARE FEET

ROOM # OR ZONE ID	TOTAL AREA (SF)	Designer needs to provide detailed documentation that the lighting level provided by the overhead lighting meets the needs of the space. The details include luminaire types, CU, and mounting locations relative to work areas.
TOTAL		

BUILDING SUMMARY - PORTABLE LIGHTING

BUILDING SUMMARY	TOTAL AREA (SF) (FROM TABLES 1A+1B+1C)	TOTAL WATTS (FROM TABLES 1A+1B)
BUILDING TOTAL		

Enter on LTG-1 and 2: Portable Lighting

ACM NF-2005

Appendix NF - Technical Databases for Test Runs

Table NF-1 – ACM MATERIAL LIBRARY
Table NF-2 – ACM LAYERS LIBRARY
Table NF-3 – ACM CONSTRUCTION LIBRARY
Table NF-4 – ACM VAV BOX LIBRARY
Table NF-5 – ACM PIU EQUIPMENT LIBRARY
Table NF-6 – ACM SMALL PACKAGE SPLIT AIR CONDITIONER
Table NF-7 – ACM LARGE PACKAGE SPLIT AIR CONDITIONER LIBRARY
Table NF-8 – ACM FAN COIL EQUIPMENT LIBRARY
Table NF-9 – ACM HEAT ONLY LIBRARY
Table NF-10 – ACM HEAT PUMP EQUIPMENT LIBRARY
Table NF-11 – ACM WATER LOOP EQUIPMENT LIBRARY
Table NF-12 – ACM EVAPORATIVE EQUIPMENT LIBRARY
Table NF-13 – ACM SYSTEM EQUIPMENT LIBRARY
Table NF-14 – ACM ELECTRICAL CHILLER LIBRARY
Table NF-15 – ACM ABSORPTION CHILLER LIBRARY
Table NF-16 – ACM TOWER LIBRARY
Table NF-17 – ACM BOILER LIBRARY
Table NF-18 – ACM VAV BOX SELECTED
Table NF-19 – ACM PACKAGE UNITS SELECTED
Table NF-20 – ACM WATER LOOP HEAT PUMP SELECTED
Table NF-21 – ACM EVAPORATIVE COOLING EQUIPMENT SELECTED
Table NF-22 – FAN COIL UNITS SELECTED
Table NF-23 – ACM HEAT PUMP EQUIPMENT SELECTED
Table NF-24 – ACM SYSTEM EQUIPMENT SELECTED
Table NF-25 – ACM CENTRAL COOLING EQUIPMENT SELECTED
Table NF-26 – ACM BOILER SELECTION

Table NF-1 – ACM MATERIAL LIBRARY

NAME	THICKNESS (feet)	CONDUCT.	DENSITY	SP-HEAT	R-VALUE
2X4	0.2917	0.0842	35.00	0.39	
2X6	0.4583	0.0842	35.00	0.39	
AIRWALL-MAT					1.00
CARPET2					2.00
CEL-2.5	0.2083	0.0333	5.00	0.32	
EARTH	1.0000	0.5000	85.00	0.20	
~~HC1.42U057-MAT~~	~~1.0000~~	~~0.0601~~	~~7.11~~	~~0.20~~	
~~HC1.42U078-MAT~~	~~1.0000~~	~~0.0839~~	~~7.11~~	~~0.20~~	
~~HC19R2.375~~	~~0.9500~~	~~0.4000~~	~~100.00~~	~~0.20~~	
~~HC9.67R1.209~~	~~0.4835~~	~~0.4000~~	~~100.00~~	~~0.20~~	
ISO-3.0	0.2500	0.0142	1.50	0.38	
PERIM	1.3330	0.9300	82.00	0.22	
R1.60					1.60
R1.95					1.95
R10-RIGID-INS	0.1667	0.0167	14.00	0.17	
R11-INS	0.2917	0.0265	0.60	0.20	
R13-INS	0.2917	0.0224	0.60	0.20	
R19-INS	0.5035	0.0265	0.60	0.20	
R30-INS	0.7500	0.0265	0.60	0.20	
R4-RIGID-INS	0.0833	0.0218	14.00	0.17	
R4.76					4.76
R5.93					5.93
R7-RIGID-INS	0.0833	0.0119	14.00	0.17	
~~RHC6U057-MAT~~	~~1.0000~~	~~0.0597~~	~~30.00~~	~~0.20~~	
~~RHC6U078-MAT~~	~~1.0000~~	~~0.0831~~	~~30.00~~	~~0.20~~	
SC2A	0.0729	0.4288	166.00	0.20	
SPANDREL-R10-MAT	1.0000	0.0100	25.00	0.20	
SPANDREL-R15-MAT	1.0000	0.0667	30.00	0.20	
~~W1A-R11~~	~~0.2950~~	~~0.0952~~	~~5.50~~	~~0.13~~	
~~W1B-R13~~	~~0.2950~~	~~0.0894~~	~~5.50~~	~~0.13~~	
~~W1D-R17~~	~~0.2950~~	~~0.0720~~	~~5.50~~	~~0.13~~	
~~W2A-R11~~	~~0.2917~~	~~0.0265~~	~~5.50~~	~~0.13~~	
~~W2B-R13~~	~~0.2917~~	~~0.0224~~	~~5.50~~	~~0.13~~	
~~W2C-R18~~	~~0.4583~~	~~0.0257~~	~~5.50~~	~~0.13~~	
~~W2D-R21~~	~~0.4583~~	~~0.0218~~	~~5.50~~	~~0.13~~	
~~W3A-MAT~~	~~0.3333~~	~~0.2259~~	~~168.00~~	~~0.20~~	
~~W3B-MAT~~	~~0.3333~~	~~0.1595~~	~~168.00~~	~~0.20~~	
~~W4A-MAT~~	~~0.5000~~	~~0.8333~~	~~162.00~~	~~0.20~~	

NAME	THICKNESS (feet)	CONDUCT.	DENSITY	SP-HEAT	R-VALUE
~~W4B-MAT~~	~~0.5000~~	~~0.7257~~	~~162.00~~	~~0.20~~	
~~W4C-MAT~~	~~0.5000~~	~~0.3030~~	~~162.00~~	~~0.20~~	
~~W4D-MAT~~	~~0.5000~~	~~0.2591~~	~~162.00~~	~~0.20~~	
~~WD4C~~	~~0.2917~~	~~0.0667~~	~~32.00~~	~~0.33~~	
~~WD6C~~	~~0.4583~~	~~0.0667~~	~~32.00~~	~~0.33~~	
~~WHC2.4U084-MAT~~	~~1.0000~~	~~0.0905~~	~~12.00~~	~~0.20~~	
~~WHC2.4U092-MAT~~	~~1.0000~~	~~0.0991~~	~~12.00~~	~~0.20~~	
~~WHC5U084-MAT~~	~~1.0000~~	~~0.0905~~	~~25.00~~	~~0.20~~	
~~WHC5U092-MAT~~	~~1.0000~~	~~0.0998~~	~~25.00~~	~~0.20~~	

Table NF-2 – ACM LAYERS LIBRARY

Name	Mat[1]	Mat[2]	Mat[3]	Mat[4]	Mat[5]	I-F-R
AIRWALL-LAY	AIRWALL-MAT					0.68
CONC-SPANDEL-LAY	CC22	W1B-R13	GP02			0.68
DEMISING-LAY	GP01	W1A-R11	GP01			0.68
DOORC-LAY	AS01	WD11	AS01			0.68
~~FHC19U097-LAY~~	~~R4.76~~	~~HC19R2.375~~	~~CP01~~			~~0.92~~
~~FHC19U158-LAY~~	~~R1.60~~	~~HC19R2.375~~	~~CP01~~			~~0.92~~
~~FHC9.67U097-LAY~~	~~R5.93~~	~~HC9.67R1.209~~	~~CP01~~			~~0.92~~
~~FHC9.67U158-LAY~~	~~R1.95~~	~~HC9.67R1.209~~	~~CP01~~			~~0.92~~
FLR-CONC-CAV-LAY	CEL-2.5	CC03	CP01			0.92
FLR-CONC-RAK-LAY	CEL-2.5	CC05	CP01			0.92
~~FX02X6-FRM-LAY~~	~~2X6~~	~~PW04~~	~~CARPET2~~			~~0.92~~
~~FX02X6-INS-LAY~~	~~PW04~~	~~CARPET2~~				~~0.92~~
~~FX112X6-FRM-LAY~~	~~2X6~~	~~PW04~~	~~CARPET2~~			~~0.92~~
~~FX112X6-INS-LAY~~	~~W2A-R11~~	~~PW04~~	~~CARPET2~~			~~0.92~~
~~FX132X6-FRM-LAY~~	~~2X6~~	~~PW04~~	~~CARPET2~~			~~0.92~~
~~FX132X6-INS-LAY~~	~~W2B-R13~~	~~PW04~~	~~CARPET2~~			~~0.92~~
INTWALL-LAY	GP03	GP03	GP03			0.68
RF-INTERIOR-LAY	CC04	CP01				0.61
RF-ISO3.0-LAY	BR01	ISO-3.0	PW04			0.61
~~RF1B-NR-LAY~~	~~BR01~~	~~PW04~~	~~AL23~~	~~W2A-R11~~	~~GP01~~	~~0.61~~
~~RF1B-NRF-LAY~~	~~BR01~~	~~PW04~~	~~2X6~~	~~GP01~~		~~0.61~~
~~RF1C-NR-LAY~~	~~BR01~~	~~PW04~~	~~W2C-R18~~	~~GP01~~		~~0.61~~
~~RF1C-NRF-LAY~~	~~BR01~~	~~PW04~~	~~WD6C~~	~~GP01~~		~~0.61~~
~~RF1D-NR-LAY~~	~~BR01~~	~~R7-RIGID-INS~~	~~PW04~~	~~W2C-R18~~	~~GP01~~	~~0.61~~
~~RF1D-NRF-LAY~~	~~BR01~~	~~R7-RIGID-INS~~	~~PW04~~	~~2X6~~	~~GP01~~	~~0.61~~
~~RHC1.42U057-LAY~~	~~HC1.42U057-MAT~~					~~0.61~~
~~RHC1.42U078-LAY~~	~~HC1.42U078-MAT~~					~~0.61~~
~~RHC6U057-LAY~~	~~RHC6U057-MAT~~					~~0.61~~
~~RHC6U078-LAY~~	~~RHC6U078-MAT~~					~~0.61~~
ROOFI-F-LAY	CC32	PW05	WD05	WD05		0.61
ROOFI-LAY	CC32	PW05				0.61
SLAB-LAY	EARTH	CC14				0.92
SLABC-LAY	EARTH	CC14	CP01			0.92
SLABP-LAY	EARTH	CC14	CP01			0.92
SPANDREL-R10-LAY	SPANDREL-R10-MAT					0.68
SPANDREL-R15-LAY	SPANDREL-R15-MAT					0.61
~~W1A-LAY~~	~~SC2A~~	~~PW03~~	~~W1A-R11~~	~~GP02~~		~~0.68~~
~~W1B-LAY~~	~~SC2A~~	~~PW03~~	~~W1B-R13~~	~~GP02~~		~~0.68~~
~~W1D-LAY~~	~~SC2A~~	~~IN33~~	~~PW03~~	~~W1D-R17~~	~~GP01~~	~~0.68~~

Name	Mat[1]	Mat[2]	Mat[3]	Mat[4]	Mat[5]	I-F-R
~~W2A-FRM-LAY~~	~~PW03~~	~~BP01~~	~~WD04~~	~~GP01~~		~~0.68~~
~~W2A-INS-LAY~~	~~PW03~~	~~BP01~~	~~W2A-R11~~	~~GP01~~		~~0.68~~
~~W2B-FRM-LAY~~	~~PW03~~	~~BP01~~	~~WD04~~	~~GP01~~		~~0.68~~
~~W2B-INS-LAY~~	~~PW03~~	~~BP01~~	~~W2B-R13~~	~~GP01~~		~~0.68~~
~~W2D-FRM-LAY~~	~~PW03~~	~~BP01~~	~~WD6C~~	~~GP01~~		~~0.68~~
~~W2D-INS-LAY~~	~~PW03~~	~~BP01~~	~~W2D-R21~~	~~GP01~~		~~0.68~~
~~W3A-LAY~~	~~W3A-MAT~~					~~0.68~~
~~W3B-LAY~~	~~W3B-MAT~~					~~0.68~~
~~W4A-LAY~~	~~W4A-MAT~~					~~0.68~~
~~W4B-LAY~~	~~W4B-MAT~~					~~0.68~~
~~W4C-LAY~~	~~W4C-MAT~~					~~0.68~~
~~W4D-LAY~~	~~W4D-MAT~~					~~0.68~~
~~WHC2.4U084-LAY~~	~~WHC2.4U084-MAT~~					~~0.68~~
~~WHC2.4U092-LAY~~	~~WHC2.4U092-MAT~~					~~0.68~~
~~WHC5U084-LAY~~	~~WHC5U084-MAT~~					~~0.68~~
~~WHC5U092-LAY~~	~~WHC5U092-MAT~~					~~0.68~~
WIZ-LAY	GP02	W1A-R11	GP02			0.68

Table NF-3– ACM CONSTRUCTION LIBRARY

Construction	Layers	ABS	RO
AIRWALL	AIRWALL-LAY	0.7	3
CONC-SPANDEL	CONC-SPANDEL-LAY	0.7	3
DEMISING	DEMISING-LAY	0.7	3
DOORC	DOORC-LAY	0.7	3
~~FHC19U097~~	~~FHC19U097-LAY~~	~~0.7~~	~~3~~
~~FHC19U158~~	~~FHC19U158-LAY~~	~~0.7~~	~~3~~
~~FHC9.67U097~~	~~FHC9.67U097-LAY~~	~~0.7~~	~~3~~
~~FHC9.67U158~~	~~FHC9.67U158-LAY~~	~~0.7~~	~~3~~
FLR-CONC-CAV	FLR-CONC-CAV-LAY	0.7	3
FLR-CONC-RAK	FLR-CONC-RAK-LAY	0.7	3
~~FX02X6-FRM~~	~~FX02X6-FRM-LAY~~	~~0.7~~	~~3~~
~~FX02X6-INS~~	~~FX02X6-INS-LAY~~	~~0.7~~	~~3~~
~~FX112X6-FRM~~	~~FX112X6-FRM-LAY~~	~~0.7~~	~~3~~
~~FX112X6-INS~~	~~FX112X6-INS-LAY~~	~~0.7~~	~~3~~
~~FX132X6-FRM~~	~~FX132X6-FRM-LAY~~	~~0.7~~	~~3~~
~~FX132X6-INS~~	~~FX132X6-INS-LAY~~	~~0.7~~	~~3~~
INTWALL	INTWALL-LAY	0.7	3
RF-INTERIOR	RF-INTERIOR-LAY	0.7	3
RF-ISO3.0	RF-ISO3.0-LAY	0.7	3
~~RF1B-NR~~	~~RF1B-NR-LAY~~	~~0.7~~	~~3~~
~~RF1B-NRF~~	~~RF1B-NRF-LAY~~	~~0.7~~	~~3~~
~~RF1C-NR~~	~~RF1C-NR-LAY~~	~~0.7~~	~~3~~
~~RF1C-NRF~~	~~RF1C-NRF-LAY~~	~~0.7~~	~~3~~
~~RF1D-NR~~	~~RF1D-NR-LAY~~	~~0.7~~	~~3~~
~~RF1D-NRF~~	~~RF1D-NRF-LAY~~	~~0.7~~	~~3~~
~~RHC1.42U057~~	~~RHC1.42U057-LAY~~	~~0.7~~	~~3~~
~~RHC1.42U078~~	~~RHC1.42U078-LAY~~	~~0.7~~	~~3~~
~~RHC6U057~~	~~RHC6U057-LAY~~	~~0.4~~	~~3~~
~~RHC6U078~~	~~RHC6U078-LAY~~	~~0.4~~	~~3~~
ROOFI	ROOFI-LAY	0.7	3
ROOFI-F	ROOFI-F-LAY	0.7	3
SLAB	SLAB-LAY	0.1	3
SLABC	SLABC-LAY	0.1	3
SLABP	SLABP-LAY	0.1	3
SPANDREL-R10	SPANDREL-R10-LAY	0.7	3
SPANDREL-R15	SPANDREL-R15-LAY	0.4	3
~~W1A~~	~~W1A-LAY~~	~~0.7~~	~~3~~
~~W1B~~	~~W1B-LAY~~	~~0.7~~	~~3~~
~~W1D~~	~~W1D-LAY~~	~~0.7~~	~~3~~

Construction	Layers	ABS	RO
~~W2A-FRM~~	~~W2A-FRM-LAY~~	~~0.7~~	~~3~~
~~W2A-INS~~	~~W2A-INS-LAY~~	~~0.7~~	~~3~~
~~W2B-FRM~~	~~W2B-FRM-LAY~~	~~0.7~~	~~3~~
~~W2B-INS~~	~~W2B-INS-LAY~~	~~0.7~~	~~3~~
~~W2D-FRM~~	~~W2D-FRM-LAY~~	~~0.7~~	~~3~~
~~W2D-INS~~	~~W2D-INS-LAY~~	~~0.7~~	~~3~~
~~W3A~~	~~W3A-LAY~~	~~0.7~~	~~3~~
~~W3B~~	~~W3B-LAY~~	~~0.7~~	~~3~~
~~W4A~~	~~W4A-LAY~~	~~0.7~~	~~3~~
~~W4B~~	~~W4B-LAY~~	~~0.7~~	~~3~~
~~W4C~~	~~W4C-LAY~~	~~0.7~~	~~3~~
~~W4D~~	~~W4D-LAY~~	~~0.7~~	~~3~~
~~WHC2.4U084~~	~~WHC2.4U084-LAY~~	~~0.7~~	~~3~~
~~WHC2.4U092~~	~~WHC2.4U092-LAY~~	~~0.7~~	~~3~~
~~WHC5U084~~	~~WHC5U084~~	~~0.7~~	~~3~~
~~WHC5U092~~	~~WHC5U092-LAY~~	~~0.7~~	~~3~~
WIZ	WIZ-LAY	0.7	3

Table NF-4 – ACM VAV BOX LIBRARY

MODEL	CFM	MIN RATIO	REHEAT CAP
VAV1200A	1200	0.35	21000
VAV1200H	1200	0.30	18000
VAV1200L	1200	0.40	24000
VAV1500A	1500	0.35	26250
VAV1500H	1500	0.30	22500
VAV1500L	1500	0.40	30000
VAV2000A	2000	0.35	35000
VAV2000H	2000	0.30	30000
VAV2000L	2000	0.40	40000
VAV2500A	2500	0.35	43750
VAV2500H	2500	0.30	37500
VAV2500L	2500	0.40	50000
VAV3000A	3000	0.35	52500
VAV3000H	3000	0.30	45000
VAV3000L	3000	0.40	60000
VAV300A	300	0.35	5250
VAV300H	300	0.30	4500
VAV300L	300	0.40	6000
VAV3500A	3500	0.35	61250
VAV3500H	3500	0.30	52500
VAV3500L	3500	0.40	70000
VAV4000A	4000	0.35	70000
VAV4000H	4000	0.30	60000
VAV4000L	4000	0.40	80000
VAV4500A	4500	0.35	78750
VAV4500H	4500	0.30	67500
VAV4500L	4500	0.40	90000
VAV450A	450	0.35	7875
VAV450H	450	0.30	6750
VAV450L	450	0.40	9000
VAV5000A	5000	0.35	87500
VAV5000H	5000	0.30	75000
VAV5000L	5000	0.40	100000
VAV600A	600	0.35	10500
VAV600H	600	0.30	9000
VAV600L	600	0.40	12000
VAV900A	900	0.35	15750

MODEL	CFM	MIN RATIO	REHEAT CAP
VAV900H	900	0.30	13500
VAV900L	900	0.40	18000

Table NF-5 – ACM PIU EQUIPMENT LIBRARY

Model	TYP	Cfm	M-C-R	F-C-R	FPI	ReheatCap
PIU300AP	P	300	0.3	0.60	0.33	8100
PIU300AS	S	300	0.3	1.00	0.33	8100
PIU300HP	P	300	0.3	0.90	0.28	12000
PIU300HS	S	300	0.3	1.00	0.28	12000
PIU300LP	P	300	0.3	0.40	0.35	5400
PIU300LS	S	300	0.3	1.00	0.35	5400
PIU450AP	P	450	0.3	0.60	0.33	12000
PIU450AS	S	450	0.3	1.00	0.33	12000
PIU450HP	P	450	0.3	0.90	0.28	18200
PIU450HS	S	450	0.3	1.00	0.28	18200
PIU450LP	P	450	0.3	0.40	0.35	8100
PIU450LS	S	450	0.3	1.00	0.35	8100
PIU600AP	P	600	0.3	0.60	0.33	16200
PIU600AS	S	600	0.3	1.00	0.33	16200
PIU600HP	P	600	0.3	0.90	0.28	24300
PIU600HS	S	600	0.3	1.00	0.28	24300
PIU600LP	P	600	0.3	0.40	0.35	10800
PIU600LS	S	600	0.3	1.00	0.35	10800
PIU750AP	P	750	0.3	0.60	0.33	20250
PIU750AS	S	750	0.3	1.00	0.33	20250
PIU750HP	P	750	0.3	0.90	0.28	30400
PIU750HS	S	750	0.3	1.00	0.28	20250
PIU750LP	P	750	0.3	0.40	0.35	13500
PIU750LS	S	750	0.3	1.00	0.35	13500
PIU900AP	P	900	0.3	0.60	0.33	24300
PIU900AS	S	900	0.3	1.00	0.33	24300
PIU900HP	P	900	0.3	0.90	0.28	36500
PIU900HS	S	900	0.3	1.00	0.28	36500
PIU900LP	P	900	0.3	0.40	0.35	16200
PIU900LS	S	900	0.3	1.00	0.35	16200

Table NF-6– ACM SMALL PACKAGE SPLIT AIR CONDITIONER

Model	Cap95	Cap82	EER	SEER	CFM	Cd	FPIcv	FPIvav	HCAP	AFUE
ACSP17A	17000	18850	9.60	9.90	500	0.15	0.50	1.00	25000	82
ACSP17H	17000	17860	9.70	10.00	500	0.20	0.35	0.75	25000	84
ACSP17L	17000	20200	9.50	9.90	500	0.10	0.90	1.30	25000	80
ACSP22A	22000	24270	9.60	9.90	600	0.15	0.50	1.00	30000	82
ACSP22H	22000	24700	10.40	12.00	600	0.20	0.35	0.75	30000	84
ACSP22L	22000	24640	9.50	9.90	600	0.10	0.90	1.30	30000	82
ACSP28A	28000	31310	9.60	9.90	800	0.15	0.50	1.00	40000	84
ACSP28H	28000	31320	10.60	12.00	800	0.20	0.35	0.75	40000	80
ACSP28L	28000	31420	9.50	9.90	800	0.10	0.90	1.30	40000	82
ACSP34A	34000	36850	9.60	9.90	1100	0.15	0.50	1.00	55000	84
ACSP34H	34000	37770	10.50	12.00	1100	0.20	0.35	0.75	55000	80
ACSP34L	34000	38370	9.50	9.90	1100	0.10	0.90	1.30	55000	82
ACSP40A	40000	43360	9.60	9.90	1200	0.15	0.50	1.00	60000	84
ACSP40H	40000	42530	10.80	12.00	1200	0.20	0.35	0.75	60000	80
ACSP40L	40000	46820	9.50	9.90	1200	0.10	0.90	1.30	60000	82
ACSP46A	46000	49770	9.60	9.90	1600	0.15	0.50	1.00	80000	84
ACSP46H	46000	51400	10.50	12.00	1600	0.20	0.35	0.75	80000	80
ACSP46L	46000	49660	9.50	9.90	1600	0.10	0.90	1.30	80000	82
ACSP52A	52000	55500	9.60	9.90	1700	0.15	0.50	1.00	85000	84
ACSP52H	52000	56280	11.10	12.50	1700	0.20	0.35	0.75	85000	80
ACSP52L	52000	56650	9.50	9.90	1700	0.10	0.90	1.30	85000	82
ACSP58A	58000	62520	9.60	9.90	1800	0.15	0.50	1.00	90000	84
ACSP58H	58000	62290	10.80	12.00	1800	0.20	0.35	0.75	90000	80
ACSP58L	58000	63360	9.50	9.90	1800	0.10	0.90	1.30	90000	82
ACSP63A	63000	67460	9.60	9.90	1900	0.15	0.50	1.00	95000	84
ACSP63H	63000	68000	10.50	12.10	1900	0.20	0.35	0.75	95000	80
ACSP63L	63000	67830	9.50	9.90	1900	0.10	0.90	1.30	95000	82

Table NF-7– ACM LARGE PACKAGE SPLIT AIR CONDITIONER LIBRARY

Model	Cap95	Cfm	BHPari	MotorEff	FPIcv	FPIvav	EER	HCap	AFUE
ACLP007A	80150	3100	0.23	0.810	0.50	1.00	9.00	93000	82
ACLP007H	79100	2800	0.21	0.875	0.35	0.75	9.20	84000	84
ACLP007L	77350	2500	0.18	0.810	0.90	1.30	8.90	75000	80
ACLP010A	114500	4500	0.41	0.850	0.50	1.00	9.00	135000	82
ACLP010H	113000	4000	0.34	0.917	0.35	0.75	9.20	120000	84
ACLP010L	110500	3500	0.30	0.850	0.90	1.30	8.90	105000	80
ACLP015A	171750	6750	0.85	0.850	0.50	1.00	8.70	202500	82
ACLP015H	169500	6000	0.67	0.917	0.35	0.75	9.00	180000	84
ACLP015L	165750	5250	0.38	0.850	0.90	1.30	8.50	157500	80
ACLP020A	229000	9000	1.60	0.850	0.50	1.00	8.70	270000	82
ACLP020H	226000	8000	1.23	0.917	0.35	0.75	9.00	240000	84
ACLP020L	221000	7000	0.92	0.850	0.90	1.30	8.50	210000	80
ACLP025A	292000	8750	1.34	0.850	0.50	1.00	8.70	262500	82
ACLP025H	281000	7000	0.79	0.917	0.35	0.75	9.00	210000	84
ACLP025L	271500	6000	0.50	0.850	0.90	1.30	8.50	180000	80
ACLP030A	352000	12000	2.13	0.850	0.50	1.00	8.70	360000	82
ACLP030H	345000	10500	1.40	0.917	0.35	0.75	9.00	315000	84
ACLP030L	337000	9000	1.09	0.850	0.90	1.30	8.50	270000	80
ACLP040A	483000	18000	4.13	0.860	0.50	0.75	8.70	540000	82
ACLP040H	476000	16000	3.02	0.910	0.35	0.75	9.00	480000	84
ACLP040L	467000	14000	2.12	0.860	0.90	1.30	8.50	420000	80
ACLP050A	589000	22500	7.60	0.860	0.50	1.00	8.70	675000	82
ACLP050H	580000	20000	5.49	0.910	0.35	0.75	9.00	600000	84
ACLP050L	569000	17500	3.75	0.860	0.90	1.30	8.50	525000	80
ACLP060A	723000	27000	7.26	0.880	0.50	1.00	8.70	810000	82
ACLP060H	712000	24000	5.41	0.930	0.35	0.75	9.00	720000	84
ACLP060L	698000	21000	3.91	0.880	0.90	1.30	8.50	630000	80
ACLP070A	811000	26000	6.60	0.880	0.50	1.00	8.50	780000	82
ACLP070H	801000	24000	5.41	0.930	0.35	0.75	8.80	720000	84
ACLP070L	815000	27000	7.26	0.880	0.90	1.30	8.20	810000	80
ACLP075A	883000	26000	6.60	0.880	0.50	1.00	8.50	780000	82
ACLP075H	873000	24000	5.41	0.930	0.35	0.75	8.80	720000	84
ACLP075L	862000	22000	3.91	0.880	0.90	1.30	8.20	660000	80
ACLP090A	1062000	42000	15.03	0.880	0.50	1.00	8.70	1260000	82
ACLP090H	1044000	37000	10.82	0.930	0.35	0.75	8.80	1110000	84
ACLP090L	1021000	32000	7.52	0.880	0.90	1.30	8.20	960000	80
ACLP105A	1229000	43000	15.99	0.890	0.50	1.00	8.50	1290000	82
ACLP105H	1213000	39000	12.39	0.941	0.35	0.75	8.80	1170000	84
ACLP105L	1193000	35000	9.40	0.880	0.90	1.30	8.20	1050000	80

Table NF-8– ACM FAN COIL EQUIPMENT LIBRARY

MODEL	COOLCAP	HEATCAP	CFM	FPI
FC008A	8400	12000	300	0.50
FC008H	8400	12000	300	0.35
FC008L	8400	12000	300	0.90
FC013A	12600	18000	450	0.50
FC013H	12600	18000	450	0.35
FC013L	12600	18000	450	0.90
FC017A	16800	24000	600	0.50
FC017H	16800	24000	600	0.35
FC017L	16800	24000	600	0.90
FC021A	21000	30000	750	0.50
FC021H	21000	30000	750	0.35
FC021L	21000	30000	750	0.90
FC028A	28000	40000	1000	0.50
FC028H	28000	40000	1000	0.35
FC028L	28000	40000	1000	0.90
FC035A	35000	50000	1250	0.50
FC035H	35000	50000	1250	0.35
FC035L	35000	50000	1250	0.90
FC042A	42000	60000	1500	0.50
FC042H	42000	60000	1500	0.35
FC042L	42000	60000	1500	0.90
FC056A	56000	80000	2000	0.50
FC056H	56000	80000	2000	0.35
FC056L	56000	80000	2000	0.90
FC070A	70000	100000	2500	0.50
FC070H	70000	100000	2500	0.35
FC070L	70000	100000	2500	0.90
FC084A	84000	120000	3000	0.50
FC084H	84000	120000	3000	0.35
FC084L	84000	120000	3000	0.90
FC098A	98000	140000	3500	0.50
FC098H	98000	140000	3500	0.35
FC098L	98000	140000	3500	0.90
FC112A	112000	160000	4000	0.50
FC112H	112000	160000	4000	0.35
FC112L	112000	160000	4000	0.90
FC126A	126000	180000	4500	0.50
FC126H	126000	180000	4500	0.35
FC126L	126000	180000	4500	0.90

MODEL	COOLCAP	HEATCAP	CFM	FPI
FC140A	140000	200000	5000	0.50
FC140H	140000	200000	5000	0.35
FC140L	140000	200000	5000	0.90
FC168A	168000	240000	6000	0.50
FC168H	168000	240000	6000	0.35
FC168L	168000	240000	6000	0.90
FC196A	196000	280000	7000	0.50
FC196H	196000	280000	7000	0.35
FC196L	196000	280000	7000	0.90
FC224A	224000	320000	8000	0.50
FC224H	224000	320000	8000	0.35
FC224L	224000	320000	8000	0.90
FC252A	252000	360000	9000	0.50
FC252H	252000	360000	9000	0.35
FC252L	252000	360000	9000	0.90
FC280A	280000	400000	10000	0.50
FC280H	280000	400000	10000	0.35
FC280L	280000	400000	10000	0.90
FC350A	350000	500000	12500	0.50
FC350H	350000	500000	12500	0.35
FC350L	350000	500000	12500	0.90
FC420A	420000	600000	15000	0.50
FC420H	420000	600000	15000	0.35
FC420L	420000	600000	15000	0.90
FC490A	490000	700000	17500	0.50
FC490H	490000	700000	17500	0.35
FC490L	490000	700000	17500	0.90
FC560A	560000	800000	20000	0.50
FC560H	560000	800000	20000	0.35
FC560L	560000	800000	20000	0.90
FC700A	700000	1000000	25000	0.50
FC700H	700000	1000000	25000	0.35
FC700L	700000	1000000	25000	0.90
FC840A	840000	1200000	30000	0.50
FC840H	840000	1200000	30000	0.35
FC840L	840000	1200000	30000	0.90

Table NF-9– ACM HEAT ONLY LIBRARY

Model	HeatCap	CFM	FPI	AFUE
HEAT045A	45000	1000	0.50	82
HEAT045H	45000	1000	0.35	84
HEAT045L	45000	1000	0.90	80
HEAT063A	63000	1500	0.50	82
HEAT063H	63000	1500	0.35	84
HEAT063L	63000	1500	0.90	80
HEAT090A	90000	2000	0.50	82
HEAT090H	90000	2000	0.35	84
HEAT090L	90000	2000	0.90	80
HEAT108A	108000	2500	0.50	82
HEAT108H	108000	2500	0.35	84
HEAT108L	108000	2500	0.90	80
HEAT135A	135000	3000	0.50	82
HEAT135H	135000	3000	0.35	84
HEAT135L	135000	3000	0.90	80
HEAT153A	153000	3500	0.50	82
HEAT153H	153000	3500	0.35	84
HEAT153L	153000	3500	0.90	80
HEAT180A	180000	4000	0.50	82
HEAT180H	180000	4000	0.35	84
HEAT180L	180000	4000	0.90	80
HEAT215A	215000	5000	0.50	82
HEAT215H	215000	5000	0.35	84
HEAT215L	215000	5000	0.90	80
HEAT323A	323000	7500	0.50	82
HEAT323H	323000	7500	0.35	84
HEAT323L	323000	7500	0.90	80
HEAT450A	450000	10000	0.50	82
HEAT450H	450000	10000	0.35	84
HEAT450L	450000	10000	0.90	80
HEAT538A	538000	12500	0.50	82
HEAT538H	538000	12500	0.35	84
HEAT538L	538000	12500	0.90	80
HEAT665A	665000	15000	0.50	82
HEAT665H	665000	15000	0.35	84
HEAT665L	665000	15000	0.90	80
HEAT900A	900000	20000	0.50	82
HEAT900H	900000	20000	0.35	84
HEAT900L	900000	20000	0.90	80

Table NF-10– ACM HEAT PUMP EQUIPMENT LIBRARY

Model	Cap 95	Cap 82	Hcap 47	Hcap 17	EER	SEER	HSPF	COP 47	COP 17	Cfm	Cd	Fpi
HPSP108A	108000		110000	58700	9.00		7.32	3.00	2.00	3300		0.50
HPSP108H	108000		109800	56300	9.20		7.32	3.00	2.00	3300		0.35
HPSP108L	108000		109800	59000	8.90		7.68	3.10	2.00	3300		0.90
HPSP126A	126000		123400	68100	9.00		7.32	3.00	2.00	4300		0.50
HPSP126H	126000		111700	59900	9.60		7.32	3.00	2.00	4300		0.35
HPSP126L	126000		128100	68900	8.90		7.68	3.10	2.00	4300		0.90
HPSP162A	162000		150600	80200	8.90		7.00	2.90	2.00	5400		0.50
HPSP162H	162000		146400	77600	9.40		7.00	2.90	2.00	5400		0.35
HPSP162L	162000		148800	77200	8.50		7.00	2.90	2.00	5400		0.90
HPSP222A	222000		224200	115400	8.60		7.32	3.00	2.00	6400		0.50
HPSP222H	222000		215900	115000	8.80		7.32	3.00	2.00	6400		0.35
HPSP222L	222000		227700	123500	8.50		7.32	3.00	2.10	6400		0.90
HPSP22A	22000	24150	21600	11900	9.60	10.50	7.32	3.00	2.00	600	0.15	0.50
HPSP22H	22000	24050	20800	10900	11.10	12.00	8.40	3.30	2.00	600	0.20	0.35
HPSP22L	22000	23390	22000	12300	9.50	10.00	7.32	3.00	2.00	600	0.10	0.90
HPSP28A	28000	30420	27500	15400	9.60	10.40	7.32	3.00	2.00	800	0.15	0.50
HPSP28H	28000	30040	25400	13900	11.20	12.00	7.32	3.00	2.00	800	0.20	0.35
HPSP28L	28000	30800	28000	15800	9.50	9.90	7.32	3.00	2.00	800	0.10	0.90
HPSP34A	34000	36980	33500	18600	9.60	10.20	7.32	3.00	2.00	1100	0.15	0.50
HPSP34H	34000	37600	31100	18000	10.70	12.00	8.40	3.30	2.20	1100	0.20	0.35
HPSP34L	34000	37790	36300	19600	9.50	9.90	7.32	3.00	2.00	1100	0.10	0.90
HPSP40A	40000	43500	39600	22000	9.60	10.00	7.32	3.00	2.00	1200	0.15	0.50
HPSP40H	40000	44140	37200	20700	10.30	12.00	8.04	3.20	2.00	1200	0.20	0.35
HPSP40L	40000	44930	41400	24000	9.50	9.90	7.32	3.00	2.00	1200	0.10	0.90
HPSP46A	46000	50000	46200	25700	9.60	10.00	7.32	3.00	2.00	1600	0.15	0.50
HPSP46H	46000	51400	46500	25600	10.40	12.00	8.04	3.20	2.10	1600	0.20	0.35
HPSP46L	46000	49830	48100	26200	9.50	9.90	7.68	3.10	2.10	1600	0.10	0.90
HPSP52A	52000	56060	51300	28000	9.60	10.00	7.32	3.00	2.00	1700	0.15	0.50
HPSP52H	52000	56820	49300	28900	9.90	12.30	8.04	3.20	2.00	1700	0.20	0.35
HPSP52L	52000	56280	51400	30000	9.50	9.90	7.32	3.00	2.00	1700	0.10	0.90
HPSP58A	58000	62530	59000	33800	9.60	10.00	7.68	3.10	2.10	1800	0.15	0.50
HPSP58H	58000	64710	58000	31500	10.10	12.00	8.40	3.30	2.20	1800	0.20	0.35
HPSP58L	58000	62140	60000	33900	9.50	9.90	7.32	3.00	2.10	1800	0.10	0.90
HPSP63A	63000	66900	60800	34300	9.60	10.00	7.32	3.00	2.00	1900	0.15	0.50
HPSP63H	63000	67260	58900	32100	9.70	10.50	7.32	3.00	2.00	1900	0.20	0.35
HPSP63L	63000	67190	59400	32600	9.50	9.90	7.32	3.00	2.00	1900	0.10	0.90
HPSP72A	72000		70600	38200	9.00		7.32	3.00	2.00	2400		0.50
HPSP72H	72000		71600	44400	9.50		7.68	3.10	2.00	2400		0.35
HPSP72L	72000		72000	35400	8.90		7.32	3.00	2.00	2400		0.90

Model	Cap 95	Cap 82	Hcap 47	Hcap 17	EER	SEER	HSPF	COP 47	COP 17	Cfm	Cd	Fpi
HPSP90A	90000		90500	49300	9.00		7.32	3.00	2.00	2600		0.50
HPSP90H	90000		83400	54100	9.40		7.32	3.00	2.10	2600		0.35
HPSP90L	90000		88900	44400	8.90		7.32	3.00	2.00	2600		0.90

Table NF-11– ACM WATER LOOP EQUIPMENT LIBRARY

MODEL	COOLCAP	EER	HEATCAP	COP	CFM	FPI
WHP007A	7000	11.50	8050	4.00	230	0.50
WHP007H	7000	15.00	8050	4.50	230	0.35
WHP007L	7000	10.00	8050	3.80	230	0.85
WHP009A	9000	11.50	10350	4.00	300	0.50
WHP009H	9000	15.00	10350	4.50	300	0.35
WHP009L	9000	10.00	10350	3.80	300	0.85
WHP012A	12000	11.50	13800	4.00	400	0.50
WHP012H	12000	15.00	13800	4.50	400	0.35
WHP012L	12000	10.00	13800	3.80	400	0.85
WHP015A	15000	11.50	17250	4.00	500	0.50
WHP015H	15000	15.00	17250	4.50	500	0.35
WHP015L	15000	10.00	17250	3.80	500	0.85
WHP018A	18000	11.50	20700	4.00	600	0.50
WHP018H	18000	15.00	20700	4.50	600	0.35
WHP018L	18000	10.00	20700	3.80	600	0.85
WHP024A	24000	11.50	27600	4.00	800	0.50
WHP024H	24000	15.00	27600	4.50	800	0.35
WHP024L	24000	10.00	27600	3.80	800	0.85
WHP030A	30000	11.50	34500	4.00	1000	0.50
WHP030H	30000	15.00	34500	4.50	1000	0.35
WHP030L	30000	10.00	34500	3.80	1000	0.85
WHP036A	36000	11.50	41400	4.00	1200	0.50
WHP036H	36000	15.00	41400	4.50	1200	0.35
WHP036L	36000	10.00	41400	3.80	1200	0.85
WHP042A	42000	11.50	48300	4.00	1400	0.50
WHP042H	42000	15.00	48300	4.50	1400	0.35
WHP042L	42000	10.00	48300	3.80	1400	0.85
WHP048A	48000	11.50	55200	4.00	1600	0.50
WHP048H	48000	15.00	55200	4.50	1600	0.35
WHP048L	48000	10.00	55200	3.80	1600	0.85
WHP060A	60000	11.50	69000	4.00	2000	0.50
WHP060H	60000	15.00	69000	4.50	2000	0.35
WHP060L	60000	10.00	69000	3.80	2000	0.85

MODEL	COOLCAP	EER	HEATCAP	COP	CFM	FPI
WHP072A	72000	11.50	82800	4.00	2400	0.50
WHP072H	72000	15.00	82800	4.50	2400	0.35
WHP072L	72000	10.50	82800	3.80	2400	0.85
WHP084A	84000	11.50	96600	4.00	2800	0.50
WHP084H	84000	15.00	96600	4.50	2800	0.35
WHP084L	84000	10.50	96600	3.80	2800	0.85
WHP096A	96000	11.50	110400	4.00	3200	0.50
WHP096H	96000	15.00	110400	4.50	3200	0.35
WHP096L	96000	10.50	110400	3.80	3200	0.85
WHP108A	108000	11.50	124200	4.00	3600	0.50
WHP108H	108000	15.00	124200	4.50	3600	0.35
WHP108L	108000	10.50	124200	3.80	3600	0.85
WHP120A	120000	11.50	138000	4.00	4000	0.50
WHP120H	120000	15.00	138000	4.50	4000	0.35
WHP120L	120000	10.50	138000	3.80	4000	0.85
WHP132A	132000	11.50	151800	4.00	4400	0.50
WHP132H	132000	15.00	151800	4.50	4400	0.35
WHP132L	132000	10.50	151800	3.80	4400	0.85

Table NF-12– ACM EVAPORATIVE EQUIPMENT LIBRARY

Model	Cfm	IndirEff	DirEff	FPI	FPIsup	ACbackUp
EVAP1000AIB	1000	85		0.696	0.500	ACSP58A
EVAP1000AID	1000	85	78	0.696	0.500	
EVAP1000HIB	1000	85		0.546	0.240	ACSP58H
EVAP1000HID	1000	85	78	0.546	0.240	
EVAP1000LIB	1000	85		0.996	0.600	ACSP58L
EVAP1000LID	1000	85	78	0.996	0.600	
EVAP1300AIB	1300	85		0.696	0.500	ACSP63A
EVAP1300AID	1300	85	78	0.696	0.500	
EVAP1300HIB	1300	85		0.546	0.240	ACSP63H
EVAP1300HID	1300	85	78	0.546	0.240	
EVAP1300LIB	1300	85		0.996	0.600	ACSP63L
EVAP1300LID	1300	85	78	0.996	0.600	
EVAP1500AIB	1500	85		0.696	0.500	ACLP007A
EVAP1500AID	1500	85	78	0.696	0.500	
EVAP1500HIB	1500	85		0.546	0.240	ACLP007H
EVAP1500HID	1500	85	78	0.546	0.240	
EVAP1500LIB	1500	85		0.996	0.600	ACLP007L
EVAP1500LID	1500	85	78	0.996	0.600	

Model	Cfm	IndirEff	DirEff	FPI	FPIsup	ACbackUp
EVAP2000AIB	2000	85		0.696	0.500	ACLP007A
EVAP2000AID	2000	85	78	0.696	0.500	
EVAP2000HIB	2000	85		0.546	0.240	ACLP007H
EVAP2000HID	2000	85	78	0.546	0.240	
EVAP2000LIB	2000	85		0.996	0.600	ACLP007L
EVAP2000LID	2000	85	78	0.996	0.600	
EVAP2500AIB	2500	85		0.696	0.500	ACLP007A
EVAP2500AID	2500	85	78	0.696	0.500	
EVAP2500HIB	2500	85		0.546	0.240	ACLP007H
EVAP2500HID	2500	85	78	0.546	0.240	
EVAP2500LIB	2500	85		0.996	0.600	ACLP007L
EVAP2500LID	2500	85	78	0.996	0.600	

Table NF-13– ACM SYSTEM EQUIPMENT LIBRARY

MODEL	COOLCAP	HEATCAP	CFM	FPIcv	FPIvav
SYS0025A	25000	33929	893	0.50	1.00
SYS0025H	25000	33929	893	0.35	0.75
SYS0025L	25000	33929	893	0.90	1.35
SYS0038A	38000	51571	1357	0.50	1.00
SYS0038H	38000	51571	1357	0.35	0.75
SYS0038L	38000	51571	1357	0.90	1.35
SYS0050A	50000	67857	1786	0.50	1.00
SYS0050H	50000	67857	1786	0.35	0.75
SYS0050L	50000	67857	1786	0.90	1.35
SYS0063A	63000	85500	2250	0.50	1.00
SYS0063H	63000	85500	2250	0.35	0.75
SYS0063L	63000	85500	2250	0.90	1.35
SYS0075A	75000	101786	2679	0.50	1.00
SYS0075H	75000	101786	2679	0.35	0.75
SYS0075L	75000	101786	2679	0.90	1.35
SYS0088A	88000	119429	3143	0.50	1.00
SYS0088H	88000	119429	3143	0.35	0.75
SYS0088L	88000	119429	3143	0.90	1.35
SYS0100A	100000	135714	3571	0.50	1.00
SYS0100H	100000	135714	3571	0.35	0.75
SYS0100L	100000	135714	3571	0.90	1.35
SYS0125A	125000	169643	4464	0.50	1.00
SYS0125H	125000	169643	4464	0.35	0.75
SYS0125L	125000	169643	4464	0.90	1.35

MODEL	COOLCAP	HEATCAP	CFM	FPIcv	FPIvav
SYS0188A	188000	255143	6714	0.50	1.00
SYS0188H	188000	255143	6714	0.35	0.75
SYS0188L	188000	255143	6714	0.90	1.35
SYS0250A	250000	339286	8929	0.50	1.00
SYS0250H	250000	339286	8929	0.35	0.75
SYS0250L	250000	339286	8929	0.90	1.35
SYS0380A	380000	515714	13571	0.50	1.00
SYS0380H	380000	515714	13571	0.35	0.75
SYS0380L	380000	515714	13571	0.90	1.35
SYS0500A	500000	678571	17857	0.50	1.00
SYS0500H	500000	678571	17857	0.35	0.75
SYS0500L	500000	678571	17857	0.90	1.35
SYS0625A	625000	848214	22321	0.50	1.00
SYS0625H	625000	848214	22321	0.35	0.75
SYS0625L	625000	848214	22321	0.90	1.35
SYS0750A	750000	1017857	26786	0.50	1.00
SYS0750H	750000	1017857	26786	0.35	0.75
SYS0750L	750000	1017857	26786	0.90	1.35
SYS1000A	1000000	1357143	33000	0.50	1.00
SYS1000H	1000000	1357143	33000	0.35	0.75
SYS1000L	1000000	1357143	33000	0.90	1.35

Table NF-14– ACM ELECTRICAL CHILLER LIBRARY

Model	CoolCap	COP
COOL0180A	180000	4.00
COOL0180H	180000	4.20
COOL0180L	180000	3.80
COOL0240A	240000	4.00
COOL0240H	240000	4.20
COOL0240L	240000	3.80
COOL0300A	300000	4.00
COOL0300H	300000	4.20
COOL0300L	300000	3.80
COOL0360A	360000	4.00
COOL0360H	360000	4.20
COOL0360L	360000	3.80
COOL0480A	480000	4.00
COOL0480H	480000	4.20
COOL0480L	480000	3.80

Model	CoolCap	COP
COOL0900A	900000	4.00
COOL0900H	900000	4.20
COOL0900L	900000	3.80
COOL1200A	1200000	4.00
COOL1200H	1200000	4.20
COOL1200L	1200000	3.80
COOL1800A	1800000	4.40
COOL1800H	1800000	4.60
COOL1800L	1800000	4.20
COOL2100A	2100000	4.40
COOL2100H	2100000	4.60
COOL2100L	2100000	4.20
COOL2400A	2400000	4.40
COOL2400H	2400000	4.60
COOL2400L	2400000	4.20
COOL3000A	3000000	4.40
COOL3000H	3000000	4.60
COOL3000L	3000000	4.20
COOL3600A	3600000	5.60
COOL3600H	3600000	5.80
COOL3600L	3600000	5.20
COOL4200A	4200000	5.60
COOL4200H	4200000	5.80
COOL4200L	4200000	5.20

Table NF-15– ACM ABSORPTION CHILLER LIBRARY

Model	Cooling Capacity	HIR	EIR
ABSOR10180A	180000	1.60	0.0040
ABSOR10180H	180000	1.55	0.0035
ABSOR10180L	180000	1.65	0.0045
ABSOR10240A	240000	1.60	0.0040
ABSOR10240H	240000	1.55	0.0035
ABSOR10240L	240000	1.65	0.0045
ABSOR10300A	300000	1.60	0.0040
ABSOR10300H	300000	1.55	0.0035
ABSOR10300L	300000	1.65	0.0045
ABSOR10360A	360000	1.60	0.0040
ABSOR10360H	360000	1.55	0.0035
ABSOR10360L	360000	1.65	0.0045

Model	Cooling Capacity	HIR	EIR
ABSOR10480A	480000	1.60	0.0040
ABSOR10480H	480000	1.55	0.0035
ABSOR10480L	480000	1.65	0.0045
ABSOR10900A	900000	1.60	0.0040
ABSOR10900H	900000	1.55	0.0035
ABSOR10900L	900000	1.65	0.0045
ABSOR11200A	1200000	1.60	0.0040
ABSOR11200H	1200000	1.65	0.0035
ABSOR11200L	1200000	1.55	0.0045
ABSOR11800A	1800000	1.60	0.0040
ABSOR11800H	1800000	1.55	0.0035
ABSOR11800L	1800000	1.65	0.0045
ABSOR12100A	2100000	1.60	0.0040
ABSOR12100H	2100000	1.55	0.0035
ABSOR12100L	2100000	1.65	0.0045
ABSOR12400A	2400000	1.60	0.0040
ABSOR12400H	2400000	1.55	0.0035
ABSOR12400L	2400000	1.65	0.0045
ABSOR13000A	3000000	1.60	0.0040
ABSOR13000H	3000000	1.55	0.0035
ABSOR13000L	3000000	1.65	0.0045
ABSOR13600A	3600000	1.60	0.0040
ABSOR13600H	3600000	1.55	0.0035
ABSOR13600L	3600000	1.65	0.0045
ABSOR14200A	4200000	1.60	0.0040
ABSOR14200H	4200000	1.55	0.0035
ABSOR14200L	4200000	1.65	0.0045
ABSOR20180A	180000	1.00	0.0070
ABSOR20180H	180000	1.00	0.0065
ABSOR20180L	180000	1.00	0.0075
ABSOR20240A	240000	1.00	0.0070
ABSOR20240H	240000	1.00	0.0065
ABSOR20240L	240000	1.00	0.0075
ABSOR20360A	360000	1.00	0.0070
ABSOR20360H	360000	1.00	0.0065
ABSOR20360L	360000	1.00	0.0075
ABSOR20480A	480000	1.00	0.0070
ABSOR20480H	480000	1.00	0.0065
ABSOR20480L	480000	1.00	0.0075
ABSOR20900A	900000	1.00	0.0070

Model	Cooling Capacity	HIR	EIR
ABSOR20900H	900000	1.00	0.0065
ABSOR20900L	900000	1.00	0.0075
ABSOR21200A	1200000	1.00	0.0070
ABSOR21200H	1200000	1.00	0.0065
ABSOR21200L	1200000	1.00	0.0075
ABSOR21800A	1800000	1.00	0.0070
ABSOR21800H	1800000	1.00	0.0065
ABSOR21800L	1800000	1.00	0.0075
ABSOR22100A	2100000	1.00	0.0070
ABSOR22100H	2100000	1.00	0.0065
ABSOR22100L	2100000	1.00	0.0075
ABSOR22400A	2400000	1.00	0.0070
ABSOR22400H	2400000	1.00	0.0065
ABSOR22400L	2400000	1.00	0.0075
ABSOR23000A	3000000	1.00	0.0070
ABSOR23000H	3000000	1.00	0.0065
ABSOR23000L	3000000	1.00	0.0075
ABSOR23600A	3600000	1.00	0.0070
ABSOR23600H	3600000	1.00	0.0065
ABSOR23600L	3600000	1.00	0.0075
ABSOR24200A	4200000	1.00	0.0070
ABSOR24200H	4200000	1.00	0.0065
ABSOR24200L	4200000	1.00	0.0075
ABSORG0180A	180000	1.00	0.0071
ABSORG0180H	180000	1.00	0.0066
ABSORG0180L	180000	1.00	0.0076
ABSORG0240A	240000	1.00	0.0071
ABSORG0240H	240000	1.00	0.0066
ABSORG0240L	240000	1.00	0.0076
ABSORG0360A	360000	1.00	0.0071
ABSORG0360H	360000	1.00	0.0066
ABSORG0360L	360000	1.00	0.0076
ABSORG0480A	480000	1.00	0.0071
ABSORG0480H	480000	1.00	0.0066
ABSORG0480L	480000	1.00	0.0076
ABSORG0900A	900000	1.00	0.0071
ABSORG0900H	900000	1.00	0.0066
ABSORG0900L	900000	1.00	0.0076
ABSORG1200A	1200000	1.00	0.0071
ABSORG1200H	1200000	1.00	0.0066

Model	Cooling Capacity	HIR	EIR
ABSORG1200L	1200000	1.00	0.0076
ABSORG1800A	1800000	1.00	0.0071
ABSORG1800H	1800000	1.00	0.0066
ABSORG1800L	1800000	1.00	0.0076
ABSORG2100A	2100000	1.00	0.0071
ABSORG2100H	2100000	1.00	0.0066
ABSORG2100L	2100000	1.00	0.0076
ABSORG2400A	2400000	1.00	0.0071
ABSORG2400H	2400000	1.00	0.0066
ABSORG2400L	2400000	1.00	0.0076
ABSORG3000A	3000000	1.00	0.0071
ABSORG3000H	3000000	1.00	0.0066
ABSORG3000L	3000000	1.00	0.0076
ABSORG3600A	3600000	1.00	0.0071
ABSORG3600H	3600000	1.00	0.0066
ABSORG3600L	3600000	1.00	0.0076
ABSORG4200A	4200000	1.00	0.0071
ABSORG4200H	4200000	1.00	0.0066
ABSORG4200L	4200000	1.00	0.0076

Table NF-16– ACM TOWER LIBRARY

Model	CoolCap
TOWER0220	220000
TOWER0260	260000
TOWER0330	330000
TOWER0390	390000
TOWER0500	500000
TOWER0930	930000
TOWER1250	1250000
TOWER1870	1870000
TOWER2160	2160000
TOWER2480	2480000
TOWER3100	3100000
TOWER3700	3700000
TOWER4300	4300000

Table NF-17– ACM BOILER LIBRARY

Model	Size	Afue
BOILER00100A	100000	82
BOILER00100H	100000	84
BOILER00100L	100000	80
BOILER00250A	250000	82
BOILER00250H	250000	84
BOILER00250L	250000	80
BOILER00500A	500000	82
BOILER00500H	500000	84
BOILER00500L	500000	80
BOILER00750A	750000	82
BOILER00750H	750000	84
BOILER00750L	750000	80
BOILER01000A	1000000	82
BOILER01000H	1000000	84
BOILER01000L	1000000	80
BOILER01500A	1500000	82
BOILER01500H	1500000	84
BOILER01500L	1500000	80
BOILER02000A	2000000	82
BOILER02000H	2000000	84
BOILER02000L	2000000	80
BOILER02500A	2500000	82
BOILER02500H	2500000	84
BOILER02500L	2500000	80
BOILER03000A	3000000	82
BOILER03000H	3000000	84
BOILER03000L	3000000	80

Table NF-18– ACM VAV BOX SELECTED

Test	System	Zone	Model
A12B13	SYS-1	EAST1	VAV900A
A12B13	SYS-1	EAST2	VAV1200A
A12B13	SYS-1	NORTH1	VAV900A
A12B13	SYS-1	NORTH2	VAV900A
A12B13	SYS-1	SOUTH1	VAV1500A
A12B13	SYS-1	SOUTH2	VAV1500A
A12B13	SYS-1	WEST1	VAV1200A
A12B13	SYS-1	WEST2	VAV1200A
A13B06	SYS-1	EAST1	VAV900A
A13B06	SYS-1	EAST2	VAV1200A
A13B06	SYS-1	NORTH1	VAV600A
A13B06	SYS-1	NORTH2	VAV900A
A13B06	SYS-1	SOUTH1	VAV1200A
A13B06	SYS-1	SOUTH2	VAV1500A
A13B06	SYS-1	WEST1	VAV1200A
A13B06	SYS-1	WEST2	VAV1200A
A14B16	SYS-1	EAST1	VAV900A
A14B16	SYS-1	EAST2	VAV900A
A14B16	SYS-1	NORTH1	VAV600A
A14B16	SYS-1	NORTH2	VAV900A
A14B16	SYS-1	SOUTH1	VAV1200A
A14B16	SYS-1	SOUTH2	VAV1500A
A14B16	SYS-1	WEST1	VAV900A
A14B16	SYS-1	WEST2	VAV1200A
A17B16	SYS-1	EAST1	VAV900A
A17B16	SYS-1	EAST2	VAV900A
A17B16	SYS-1	NORTH1	VAV600A
A17B16	SYS-1	NORTH2	VAV600A
A17B16	SYS-1	SOUTH1	VAV900A
A17B16	SYS-1	SOUTH2	VAV900A
A17B16	SYS-1	WEST1	VAV900A
A17B16	SYS-1	WEST2	VAV900A
B11B13	SYS-1	EAST1	VAV1500L
B11B13	SYS-1	EAST2	VAV2000L
B11B13	SYS-1	NORTH1	VAV1200L
B11B13	SYS-1	NORTH2	VAV1200L
B11B13	SYS-1	SOUTH1	VAV2000L
B11B13	SYS-1	SOUTH2	VAV2000L

Test	System	Zone	Model
B11B13	SYS-1	WEST1	VAV2000L
B11B13	SYS-1	WEST2	VAV2000L
B12B13	SYS-1	EAST1	VAV2000L
B12B13	SYS-1	EAST2	VAV2000L
B12B13	SYS-1	NORTH1	VAV1200L
B12B13	SYS-1	NORTH2	VAV1500L
B12B13	SYS-1	SOUTH1	VAV2000L
B12B13	SYS-1	SOUTH2	VAV2500L
B12B13	SYS-1	WEST1	VAV2000L
B12B13	SYS-1	WEST2	VAV2000L
B13B13	SYS-1	EAST1	VAV2000L
B13B13	SYS-1	EAST2	VAV2000L
B13B13	SYS-1	NORTH1	VAV1200L
B13B13	SYS-1	NORTH2	VAV1200L
B13B13	SYS-1	SOUTH1	VAV2500L
B13B13	SYS-1	SOUTH2	VAV2500L
B13B13	SYS-1	WEST1	VAV2000L
B13B13	SYS-1	WEST2	VAV2500L
B14B06	SYS-1	EAST1	VAV2000H
B14B06	SYS-1	EAST2	VAV2000H
B14B06	SYS-1	NORTH1	VAV1200H
B14B06	SYS-1	NORTH2	VAV1200H
B14B06	SYS-1	SOUTH1	VAV2000H
B14B06	SYS-1	SOUTH2	VAV2500H
B14B06	SYS-1	WEST1	VAV2000H
B14B06	SYS-1	WEST2	VAV2000H
B15B16	SYS-1	EAST1	VAV2000H
B15B16	SYS-1	EAST2	VAV2000H
B15B16	SYS-1	NORTH1	VAV900H
B15B16	SYS-1	NORTH2	VAV1200H
B15B16	SYS-1	SOUTH1	VAV2000H
B15B16	SYS-1	SOUTH2	VAV2500H
B15B16	SYS-1	WEST1	VAV2000H
B15B16	SYS-1	WEST2	VAV2500H
B21B12	SYS-1	EAST1	VAV1500A
B21B12	SYS-1	EAST2	VAV1500A
B21B12	SYS-1	NORTH1	VAV1200A
B21B12	SYS-1	NORTH2	VAV1200A
B21B12	SYS-1	SOUTH1	VAV1500A
B21B12	SYS-1	SOUTH2	VAV2000A

Test	System	Zone	Model
B21B12	SYS-1	WEST1	VAV2000A
B21B12	SYS-1	WEST2	VAV2000A
B22B12	SYS-1	EAST1	VAV1200A
B22B12	SYS-1	EAST2	VAV1200A
B22B12	SYS-1	NORTH1	VAV1200A
B22B12	SYS-1	NORTH2	VAV1200A
B22B12	SYS-1	SOUTH1	VAV1500A
B22B12	SYS-1	SOUTH2	VAV1500A
B22B12	SYS-1	WEST1	VAV1500A
B22B12	SYS-1	WEST2	VAV1500A
B23B12	SYS-1	EAST1	VAV1200A
B23B12	SYS-1	EAST2	VAV1200A
B23B12	SYS-1	NORTH1	VAV900A
B23B12	SYS-1	NORTH2	VAV1200A
B23B12	SYS-1	SOUTH1	VAV1500A
B23B12	SYS-1	SOUTH2	VAV1500A
B23B12	SYS-1	WEST1	VAV1500A
B23B12	SYS-1	WEST2	VAV1500A
B24B03	SYS-1	EAST1	VAV1200A
B24B03	SYS-1	EAST2	VAV1200A
B24B03	SYS-1	NORTH1	VAV900A
B24B03	SYS-1	NORTH2	VAV900A
B24B03	SYS-1	SOUTH1	VAV1200A
B24B03	SYS-1	SOUTH2	VAV1200A
B24B03	SYS-1	WEST1	VAV1200A
B24B03	SYS-1	WEST2	VAV1500A
C21B10	SYS-1	EAST2	VAV2000A
C21B10	SYS-1	NORTH1	VAV1500A
C21B10	SYS-1	NORTH2	VAV1200A
C21B10	SYS-1	SOUTH1	VAV2500A
C21B10	SYS-1	SOUTH2	VAV2500A
C21B10	SYS-1	WEST2	VAV2000A
C21B10	SYS-2	INT1	VAV600A
C21B10	SYS-2	INT2	VAV900A
C22C16	SYS-1	ZONE1E	VAV1500A
C22C16	SYS-1	ZONE1I	VAV900A
C22C16	SYS-1	ZONE1N	VAV1200A
C22C16	SYS-1	ZONE1S	VAV1500A
C22C16	SYS-1	ZONE3I	VAV900A
C22C16	SYS-1	ZONE3S	VAV1200A

Test	System	Zone	Model
C22C16	SYS-2	ZONE1W	VAV1500A
C22C16	SYS-2	ZONE3E	VAV2000A
C22C16	SYS-2	ZONE3N	VAV1200A
C22C16	SYS-2	ZONE3W	VAV2000A
E21B16	SYS-1	EAST1	VAV1200A
E21B16	SYS-1	EAST2	VAV1200A
E21B16	SYS-1	INT1	VAV900A
E21B16	SYS-1	INT2	VAV900A
E21B16	SYS-1	NORTH1	VAV600A
E21B16	SYS-1	NORTH2	VAV900A
E21B16	SYS-1	SOUTH1	VAV1500A
E21B16	SYS-1	SOUTH2	VAV1500A
E21B16	SYS-1	WEST1	VAV1200A
E21B16	SYS-1	WEST2	VAV1200A
E22B16	SYS-1	EAST1	VAV1200A
E22B16	SYS-1	EAST2	VAV1200A
E22B16	SYS-1	INT1	VAV900A
E22B16	SYS-1	INT2	VAV900A
E22B16	SYS-1	NORTH1	VAV900A
E22B16	SYS-1	NORTH2	VAV900A
E22B16	SYS-1	SOUTH1	VAV1500A
E22B16	SYS-1	SOUTH2	VAV1500A
E22B16	SYS-1	WEST1	VAV1200A
E22B16	SYS-1	WEST2	VAV1500A
E23B16	SYS-1	EAST1	VAV1200A
E23B16	SYS-1	EAST2	VAV1200A
E23B16	SYS-1	INT1	VAV900A
E23B16	SYS-1	INT2	VAV1200A
E23B16	SYS-1	NORTH1	VAV900A
E23B16	SYS-1	NORTH2	VAV900A
E23B16	SYS-1	SOUTH1	VAV1500A
E23B16	SYS-1	SOUTH2	VAV1500A
E23B16	SYS-1	WEST1	VAV1500A
E23B16	SYS-1	WEST2	VAV1500A
E24B12	SYS-1	EAST1	VAV1200H
E24B12	SYS-1	EAST2	VAV1200H
E24B12	SYS-1	INT1	VAV900H
E24B12	SYS-1	INT2	VAV900H
E24B12	SYS-1	NORTH1	VAV900H
E24B12	SYS-1	NORTH2	VAV900H

Test	System	Zone	Model
E24B12	SYS-1	SOUTH1	VAV2000H
E24B12	SYS-1	SOUTH2	VAV2000H
E24B12	SYS-1	WEST1	VAV1500H
E24B12	SYS-1	WEST2	VAV2000H
E25B12	SYS-1	EAST1	VAV1200H
E25B12	SYS-1	EAST2	VAV1500H
E25B12	SYS-1	INT1	VAV900H
E25B12	SYS-1	INT2	VAV900H
E25B12	SYS-1	NORTH1	VAV900H
E25B12	SYS-1	NORTH2	VAV1200H
E25B12	SYS-1	SOUTH1	VAV2000H
E25B12	SYS-1	SOUTH2	VAV2000H
E25B12	SYS-1	WEST1	VAV1500H
E25B12	SYS-1	WEST2	VAV2000H
E26B12	SYS-1	EAST1	VAV1500H
E26B12	SYS-1	EAST2	VAV1500H
E26B12	SYS-1	INT1	VAV900H
E26B12	SYS-1	INT2	VAV1200H
E26B12	SYS-1	NORTH1	VAV1200H
E26B12	SYS-1	NORTH2	VAV1200H
E26B12	SYS-1	SOUTH1	VAV2000H
E26B12	SYS-1	SOUTH2	VAV2000H
E26B12	SYS-1	WEST1	VAV1500H
E26B12	SYS-1	WEST2	VAV2000H
F13B12	SYS-1	EAST1	VAV2000H
F13B12	SYS-1	EAST2	VAV2000H
F13B12	SYS-1	NORTH1	VAV1200H
F13B12	SYS-1	NORTH2	VAV1500H
F13B12	SYS-1	SOUTH1	VAV2000H
F13B12	SYS-1	SOUTH2	VAV2500H
F13B12	SYS-1	WEST1	VAV2000H
F13B12	SYS-1	WEST2	VAV2000H
F14B12	SYS-1	EAST1	VAV1500H
F14B12	SYS-1	EAST2	VAV2000H
F14B12	SYS-1	NORTH1	VAV1200H
F14B12	SYS-1	NORTH2	VAV1200H
F14B12	SYS-1	SOUTH1	VAV2000H
F14B12	SYS-1	SOUTH2	VAV2000H
F14B12	SYS-1	WEST1	VAV2000H
F14B12	SYS-1	WEST2	VAV2000H

Test	System	Zone	Model
G15B03	SYS-1	EAST1	VAV3000A
G15B03	SYS-1	EAST2	VAV3500A
G15B03	SYS-1	NORTH1	VAV2000A
G15B03	SYS-1	NORTH2	VAV2000A
G15B03	SYS-1	SOUTH1	VAV3500A
G15B03	SYS-1	SOUTH2	VAV4000A
G15B03	SYS-1	WEST1	VAV3500A
G15B03	SYS-1	WEST2	VAV3500A
G15B03	SYS-2	INT1	VAV300A
G15B03	SYS-2	INT2	VAV450A
G16B16	SYS-1	EAST1	VAV600A
G16B16	SYS-1	EAST2	VAV900A
G16B16	SYS-1	NORTH1	VAV450A
G16B16	SYS-1	NORTH2	VAV450A
G16B16	SYS-1	SOUTH1	VAV900A
G16B16	SYS-1	SOUTH2	VAV900A
G16B16	SYS-1	WEST1	VAV900A
G16B16	SYS-1	WEST2	VAV900A
G16B16	SYS-2	INT1	VAV1200A
G16B16	SYS-2	INT2	VAV1500A
O21B13	SYS-1	EAST1	VAV2000A
O21B13	SYS-1	EAST2	VAV2000A
O21B13	SYS-1	INT1	VAV900A
O21B13	SYS-1	INT2	VAV1200A
O21B13	SYS-1	NORTH1	VAV1200A
O21B13	SYS-1	NORTH2	VAV1500A
O21B13	SYS-1	SOUTH1	VAV2000A
O21B13	SYS-1	SOUTH2	VAV2500A
O21B13	SYS-1	WEST1	VAV2000A
O21B13	SYS-1	WEST2	VAV2000A
O22B13	SYS-1	EAST1	VAV2000A
O22B13	SYS-1	EAST2	VAV2000A
O22B13	SYS-1	INT1	VAV900A
O22B13	SYS-1	INT2	VAV1200A
O22B13	SYS-1	NORTH1	VAV1200A
O22B13	SYS-1	NORTH2	VAV1500A
O22B13	SYS-1	SOUTH1	VAV2000A
O22B13	SYS-1	SOUTH2	VAV2500A
O22B13	SYS-1	WEST1	VAV2000A
O22B13	SYS-1	WEST2	VAV2000A

Test	System	Zone	Model
O23B13	SYS-1	EAST1	VAV2000A
O23B13	SYS-1	EAST2	VAV2000A
O23B13	SYS-1	INT1	VAV900A
O23B13	SYS-1	INT2	VAV1200A
O23B13	SYS-1	NORTH1	VAV1200A
O23B13	SYS-1	NORTH2	VAV1500A
O23B13	SYS-1	SOUTH1	VAV2000A
O23B13	SYS-1	SOUTH2	VAV2500A
O23B13	SYS-1	WEST1	VAV2000A
O23B13	SYS-1	WEST2	VAV2000A
O24B13	SYS-1	EAST1	VAV2000A
O24B13	SYS-1	EAST2	VAV2000A
O24B13	SYS-1	INT1	VAV900A
O24B13	SYS-1	INT2	VAV1200A
O24B13	SYS-1	NORTH1	VAV1200A
O24B13	SYS-1	NORTH2	VAV1500A
O24B13	SYS-1	SOUTH1	VAV2000A
O24B13	SYS-1	SOUTH2	VAV2500A
O24B13	SYS-1	WEST1	VAV2000A
O24B13	SYS-1	WEST2	VAV2000A
O41B13	SYS-1	EAST1	VAV2000L
O41B13	SYS-1	EAST2	VAV2000L
O41B13	SYS-1	INT1	VAV900L
O41B13	SYS-1	INT2	VAV1200L
O41B13	SYS-1	NORTH1	VAV1200L
O41B13	SYS-1	NORTH2	VAV1500L
O41B13	SYS-1	SOUTH1	VAV2000L
O41B13	SYS-1	SOUTH2	VAV2500L
O41B13	SYS-1	WEST1	VAV2000L
O41B13	SYS-1	WEST2	VAV2000L
O61B11	SYS-1	EAST1	VAV2000A
O61B11	SYS-1	EAST2	VAV2000A
O61B11	SYS-1	INT1	VAV900A
O61B11	SYS-1	INT2	VAV1200A
O61B11	SYS-1	NORTH1	VAV1200A
O61B11	SYS-1	NORTH2	VAV1500A
O61B11	SYS-1	SOUTH1	VAV2000A
O61B11	SYS-1	SOUTH2	VAV2500A
O61B11	SYS-1	WEST1	VAV2000A
O61B11	SYS-1	WEST2	VAV2000A

Test	System	Zone	Model
O62B11	SYS-1	EAST1	VAV2000A
O62B11	SYS-1	EAST2	VAV2000A
O62B11	SYS-1	INT1	VAV900A
O62B11	SYS-1	INT2	VAV1200A
O62B11	SYS-1	NORTH1	VAV1200A
O62B11	SYS-1	NORTH2	VAV1500A
O62B11	SYS-1	SOUTH1	VAV2000A
O62B11	SYS-1	SOUTH2	VAV2500A
O62B11	SYS-1	WEST1	VAV2000A
O62B11	SYS-1	WEST2	VAV2000A
O63B11	SYS-1	EAST1	VAV2000A
O63B11	SYS-1	EAST2	VAV2000A
O63B11	SYS-1	INT1	VAV900A
O63B11	SYS-1	INT2	VAV1200A
O63B11	SYS-1	NORTH1	VAV1200A
O63B11	SYS-1	NORTH2	VAV1500A
O63B11	SYS-1	SOUTH1	VAV2000A
O63B11	SYS-1	SOUTH2	VAV2500A
O63B11	SYS-1	WEST1	VAV2000A
O63B11	SYS-1	WEST2	VAV2000A
O64B11	SYS-1	EAST1	VAV2000A
O64B11	SYS-1	EAST2	VAV2000A
O64B11	SYS-1	INT1	VAV900A
O64B11	SYS-1	INT2	VAV1200A
O64B11	SYS-1	NORTH1	VAV1200A
O64B11	SYS-1	NORTH2	VAV1500A
O64B11	SYS-1	SOUTH1	VAV2000A
O64B11	SYS-1	SOUTH2	VAV2500A
O64B11	SYS-1	WEST1	VAV2000A
O64B11	SYS-1	WEST2	VAV2000A
O65B11	SYS-1	EAST1	VAV2000A
O65B11	SYS-1	EAST2	VAV2000A
O65B11	SYS-1	INT1	VAV900A
O65B11	SYS-1	INT2	VAV1200A
O65B11	SYS-1	NORTH1	VAV1200A
O65B11	SYS-1	NORTH2	VAV1500A
O65B11	SYS-1	SOUTH1	VAV2000A
O65B11	SYS-1	SOUTH2	VAV2500A
O65B11	SYS-1	WEST1	VAV2000A
O65B11	SYS-1	WEST2	VAV2000A

Test	System	Zone	Model
O66B12	SYS-1	EAST1	VAV2000A
O66B12	SYS-1	EAST2	VAV2000A
O66B12	SYS-1	INT1	VAV900A
O66B12	SYS-1	INT2	VAV1200A
O66B12	SYS-1	NORTH1	VAV1200A
O66B12	SYS-1	NORTH2	VAV1500A
O66B12	SYS-1	SOUTH1	VAV2000A
O66B12	SYS-1	SOUTH2	VAV2500A
O66B12	SYS-1	WEST1	VAV2000A
O66B12	SYS-1	WEST2	VAV2000A

Table NF-19 – ACM PACKAGE UNITS SELECTED

Test	System	Model
A11B13	SYS-1	ACSP34L
A11B13	SYS-2	ACSP34L
A11B13	SYS-3	ACSP34L
A11B13	SYS-4	ACSP34L
A11B13	SYS-5	ACSP34L
A11B13	SYS-6	ACSP34L
A11B13	SYS-7	ACSP34L
A11B13	SYS-8	ACSP34L
A12B13	SYS-1	ACLP025A
A13B06	SYS-1	ACLP020A
A14B16	SYS-1	ACLP020A
A15B03	SYS-1	ACSP28L
A15B03	SYS-2	ACSP28L
A15B03	SYS-3	ACSP28L
A15B03	SYS-4	ACSP28L
A15B03	SYS-5	ACSP28L
A15B03	SYS-6	ACSP28L
A15B03	SYS-7	ACSP28L
A15B03	SYS-8	ACSP28L
A16B13	SYS-1	ACSP28L
A16B13	SYS-2	ACSP28L
A16B13	SYS-3	ACSP28L
A16B13	SYS-4	ACSP28L
A16B13	SYS-5	ACSP28L
A16B13	SYS-6	ACSP28L
A16B13	SYS-7	ACSP28L

Test	System	Model
A16B13	SYS-8	ACSP28L
A17B16	SYS-1	ACLP015A
B11B13	SYS-1	ACLP040L
B12B13	SYS-1	ACLP040L
B13B13	SYS-1	ACLP040L
B14B06	SYS-1	ACLP040H
B15B16	SYS-1	ACLP040H
B21B12	SYS-1	ACLP030A
B22B12	SYS-1	ACLP025A
B23B12	SYS-1	ACLP030A
B24B03	SYS-1	ACLP025A
B31D12	SYS-1	ACLP007A
B32D12	SYS-1	ACLP007A
C11A10	SYS-1	ACLP015A
C12A10	SYS-1	ACLP015A
C13A10	SYS-1	ACLP025A
C14A10	SYS-1	ACLP010A
C15A10	SYS-1	ACLP010A
C21B10	SYS-1	ACLP030A
C21B10	SYS-2	ACSP46A
C21B10	SYS-3	HEAT045A
C21B10	SYS-4	HEAT063A
D11D12	SYS-1	ACSP63A
D12D12	SYS-1	ACSP63A
D13D07	SYS-1	ACSP52A
D14D07	SYS-1	ACSP52A
E11D16	SYS-1	ACSP22A
E12D16	SYS-1	ACSP28A
E13D16	SYS-1	ACSP28A
E14D14	SYS-1	ACSP40A
E15D14	SYS-1	ACSP40A
E16D14	SYS-1	ACSP52A
E21B16	SYS-1	ACLP025A
E22B16	SYS-1	ACLP030A
E23B16	SYS-1	ACLP030A
E24B12	SYS-1	ACLP030H
E25B12	SYS-1	ACLP040H
E26B12	SYS-1	ACLP040H
F13B12	SYS-1	ACLP040H
F14B12	SYS-1	ACLP040H

Test	System	Model
G11A11	SYS-1	ACLP025A
G12A11	SYS-1	ACLP007A
G15B03	SYS-1	ACLP015A
G15B03	SYS-2	ACLP007A
G16B16	SYS-1	ACLP060A
G16B16	SYS-2	ACSP22A
O31A12	SYS-1	ACLP015A
O32A12	SYS-1	ACLP010H
O33A12	SYS-1	ACLP010H
O41B13	SYS-1	ACLP040L
O81A11	SYS-1	ACLP015A
O82A15	SYS-1	ACLP015A
OC1A09	SYS-1	NOHVAC
OC2A09	SYS-1	NOHVAC
OC3A09	SYS-1	ACLP015H
OC4A09	SYS-1	ACLP010A
OC4A09	SYS-2	ACLP010A

Table NF-20 – ACM WATER LOOP HEAT PUMP SELECTED

Test	System	Zone	Model
O71B12	SYS-1	EAST1	WHP060A
O71B12	SYS-1	EAST2	WHP060A
O71B12	SYS-1	INT1	WHP036A
O71B12	SYS-1	INT2	WHP042A
O71B12	SYS-1	NORTH1	WHP042A
O71B12	SYS-1	NORTH2	WHP042A
O71B12	SYS-1	SOUTH1	WHP072A
O71B12	SYS-1	SOUTH2	WHP072A
O71B12	SYS-1	WEST1	WHP060A
O71B12	SYS-1	WEST2	WHP072A

Table NF-21 – ACM EVAPORATIVE COOLING EQUIPMENT SELECTED

Test	System	Model
O91A13	SYS-1	EVAP2500AIB
O92A11	SYS-1	EVAP2500AID
O93A11	SYS-1	EVAP2500AID
O94A13	SYS-1	EVAP2500AID

Table NF-22 – FAN COIL UNITS SELECTED

Test	System	Zone	Model
C22C16	SYS-3	ZONE2E	FC035A
C22C16	SYS-3	ZONE2I	FC013A
C22C16	SYS-3	ZONE2N	FC021A
C22C16	SYS-3	ZONE2S	FC056A
C22C16	SYS-3	ZONE2W	FC042A

Table NF-23 – ACM HEAT PUMP EQUIPMENT SELECTED

Test	System	Model
F11A07	SYS-1	HPSP126H
F12A13	SYS-1	HPSP162A
G13A11	SYS-1	HPSP222H
G14A11	SYS-1	HPSP90A

Table NF-24 – ACM SYSTEM EQUIPMENT SELECTED

Test	System	Model
C22C16	SYS-1	SYS0250A
C22C16	SYS-2	SYS0250A
O21B13	SYS-1	SYS0500A
O22B13	SYS-1	SYS0500A
O23B13	SYS-1	SYS0500A
O24B13	SYS-1	SYS0500A
O61B11	SYS-1	SYS0625A
O62B11	SYS-1	SYS0625A
O63B11	SYS-1	SYS0625A
O64B11	SYS-1	SYS0625A
O65B11	SYS-1	SYS0625A
O66B12	SYS-1	SYS0500A

Table NF-25 – ACM CENTRAL COOLING EQUIPMENT SELECTED

Test	Model
C22C16	COOL0900A
C22C16	TOWER0930
O21B13	COOL0480A
O21B13	TOWER0930
O22B13	COOL0480A
O22B13	TOWER0930
O23B13	COOL0480A
O23B13	TOWER0930
O24B13	COOL0480A
O24B13	TOWER0930
O61B11	ABSOR10480A
O61B11	TOWER1250
O62B11	ABSOR20480A
O62B11	TOWER0930
O63B11	ABSORG0480A
O63B11	TOWER0930
O64B11	COOL0480A
O64B11	TOWER0930
O65B11	COOL0480A
O65B11	TOWER0930
O66B12	COOL0480A
O66B12	TOWER0930
O71B12	TOWER0220
O71B12	TOWER0930
O71B12	TOWER4300

Table NF-26 – ACM BOILER SELECTION

Test	Model
A12B13	BOILER00250A
A13B06	BOILER00250A
A14B16	BOILER00250A
A17B16	BOILER00250A
B11B13	BOILER00500L
B12B13	BOILER00500L
B13B13	BOILER00500L
B14B06	BOILER00250H
B15B16	BOILER00250H
B21B12	BOILER00250A
B22B12	BOILER00250A
B23B12	BOILER00250A
B24B03	BOILER00250A
C21B10	NOBOILER
C22C16	BOILER01000A
E21B16	BOILER00250A
E22B16	BOILER00250A
E23B16	BOILER00500A
E24B12	BOILER00250H
E25B12	BOILER00250H
E26B12	BOILER00250H
F13B12	NOBOILER
F14B12	NOBOILER
G15B03	NOBOILER
G16B16	NOBOILER
O21B13	BOILER00500A
O22B13	BOILER00500A
O23B13	BOILER00500A
O24B13	BOILER00500A
O41B13	BOILER00500L
O61B11	BOILER01500A
O62B11	BOILER00750A
O63B11	BOILER00500A
O64B11	BOILER00500A
O65B11	BOILER00500A
O66B12	BOILER00500A
O71B12	BOILER00500A

ACM NG-2005

Appendix NG - Standard Procedure for Determining the ~~Seasonal~~ Energy Efficiencies of Single-Zone Nonresidential Air Distribution Systems in Buffer Spaces or Outdoors~~the Space Between an Insulated Ceiling and the Roof~~

NG.1 Purpose and Scope

ACM NG contains procedures for measuring the air leakage in single zone, nonresidential air distribution systems and for calculating the annual and hourly duct system efficiency for energy calculations. The methods described here apply to single zone, constant volume heating and air conditioning systems serving zones with 5000 ft^2 of floor area or less, with duct systems located in unconditioned or semi-conditioned buffer spaces or outdoors. These calculations apply to new buildings or new air conditioning systems applied to existing buildings.

~~NG.1 Introduction~~

~~This appendix describes the measurement and calculation methods for determining air distribution system efficiency for single-zone non-residential air distribution systems in the space between an insulated ceiling and the roof.~~

NG.2 Definitions

aerosol sealant closure system: A method of sealing leaks by blowing aerosolized sealant particles into the duct system ~~and~~ which must include minute-by-minute documentation of the sealing process.

buffer space: an unconditioned or indirectly conditioned space located between a ceiling and the roof.

~~***floor area :***The floor area of enclosed conditioned space on all floors of a building, as measured at the floor level of the exterior surfaces enclosing the conditioned space.~~

cool roof~~-~~: a roofing material with high thermal emittance and high solar reflectance, or lower thermal emittance and exceptionally high solar reflectance as specified in Standards § 118 (i) that reduces heat gain through the roof.

delivery effectiveness~~-~~: The ratio of the thermal energy delivered to the conditioned space and the thermal energy entering the distribution system at the equipment heat exchanger.

distribution system efficiency~~-~~: The ratio of the thermal energy consumed by the equipment with the distribution system to the energy consumed if the distribution system had no losses or impact on the equipment or building loads.

equipment efficiency~~-~~: The ratio between the thermal energy entering the distribution system at the equipment heat exchanger and the energy being consumed by the equipment.

equipment factor : F_{equip} is the ratio of the equipment efficiency including the effects of the distribution system to the equipment efficiency of the equipment in isolation.

fan flowmeter device: A device used to measure air flow rates under a range of test pressure differences.

floor area: The floor area of enclosed conditioned space on all floors of a building, as measured at the floor level of the exterior surfaces enclosing the conditioned space.

***Flow capture hood*:** A device used to capture and measure the airflow at a register.

load factor : F_{load} is the ratio of the building energy load without including distribution effects to the load including distribution system effects.

pressure pan : a device used to seal individual forced air system registers and to measure the static pressure from the register.

~~***radiant barrier*** : a surface of low emissivity (less than 0.05) placed inside an attic or roof space to reduce radiant heat transfer.~~

recovery factor : F_{recov} is the fraction of energy lost from the distribution system that enters the conditioned space.

thermal regain: The fraction of delivery system losses that are returned to the building.

NG.3 Nomenclature

a_r = duct leakage factor (1-return leakage) for return ducts

a_s = duct leakage factor (1-supply leakage)~~p~~ for supply ducts

$A_{duct,buffer}$ = total supply plus return duct area in buffer space, ft^2

$A_{duct,outdoor}$ = total supply plus return duct area located outdoors, ft^2

$A_{duct,n}$ = total supply plus return duct area in space n, ft^2

A_{floor} = -conditioned floor area of building , ft^2

~~$A_{r,out}$ = surface area of return duct outside conditioned space ,ft^2~~

$A_{r,buffer}$ = return duct surface area in buffer space, ft^2

$A_{r,total}$ = total return duct surface area, ft^2

~~$A_{r,attic}$ = return duct area in attic , ft^2~~

~~$A_{r,base}$ = return duct area in basement , ft^2~~

~~$A_{r,crawl}$ = return duct area in crawlspace, ft^2~~

~~$A_{r,gar}$ = return duct area inside garage, ft^2~~

~~$A_{s,out}$ = surface area of supply duct outside conditioned space,ft^2~~

$A_{s,buffer}$ = supply duct surface area in buffer space, ft^2

$A_{s,total}$ = total supply duct surface area, ft^2

~~$A_{s,attic}$ = supply duct area in attic , ft^2~~

~~$A_{s,base}$ = supply duct area in basement , ft^2~~

~~$A_{s,crawl}$ = supply duct area in crawlspace,ft^2~~

~~$A_{s,gar}$ = supply duct area inside garage, ft^2~~

~~$A_{s,in}$ = supply duct area inside conditioned space, ft^2~~

A_{walls} = area of buffer space exterior walls, ft^2

A_{roof} = area of buffer space roof, ft^2

B_r = conduction fraction for return

B_s = conduction fraction for supply

C_p = specific heat of air = 0.24 Btu/(lb·°F)

C_{DT}, C_0, C_R, C_L regression coefficients for hourly model

DE = delivery effectiveness

~~DE_{design} = design delivery effectiveness~~

$DE_{seasonal}$ = seasonal delivery effectiveness

E_{equip} = rate of energy exchanged between equipment and delivery system, Btu/hour

E_{hr} = hourly HVAC system energy input (kW for electricity, therms for gas)

$F_{cycloss}$ = cyclic loss factor

F_{equip} = load factor for equipment

~~F_{flow} = load factor for fan flow effect on equipment efficiency~~

F_{leak} = fraction of system fan flow that leaks out of supply or return ducts

F_{load} = load factor for delivery system

F_{recov} = thermal loss recovery factor

F_{regain} = thermal regain factor

h_o = outside roof surface convection coefficient, = 3.4 Btu/hr ft^2°F

I_{hor} = global solar radiation on horizontal surface, Btu/hr ft^2

K_r = return duct surface area coefficient

K_s = supply duct surface area coefficient

N_{story} = number of stories of the building

P_{sp} = pressure difference between supply plenum and conditioned space [Pa]

P_{test} = test pressure for duct leakage [Pa]

Q_{buffer} = buffer space infiltration rate, cfm

Q_e = ~~Flow through air handler fan at operating conditions, cfm~~Flow through air handler at 400 cfm/rated ton with rated tons defined by unit scheduled capacity at the conditions the unit's ARI rating standard from Section 112 of the Standard. Airflow through heating only furnaces shall be based on a 21.7 cfm/kBtuh rated output capacity.

$Q_{total,25}$ = total duct leakage at 25 Pascal, cfm

R_r = thermal resistance of return duct, h ft^2°F/Btu

R_s = thermal resistance of supply duct, h ft^2°F/Btu

$T_{amb,cool}$ = cooling season ambient temperature, °F

$T_{amb,heat}$ = heating season ambient temperature, °F

$T_{amb,r}$ = ambient temperature for return-, °F

$T_{amb,s}$ = ambient temperature for supply-, °F

~~T_{attic} = attic air temperature , F~~

~~T_{base} - return duct temperature in basement, F~~

~~T_{crawl} - return duct temperature in crawlspace,F~~

~~T_{design} = outdoor air design temperature , F~~

~~T_{ground} = ground temperature , F~~

~~T_{gar} = temperature of garage air , F~~

T_{in} = temperature of indoor air-, °F

~~T_{rp} = return plenum air temperature , F~~

~~$T_{seasonal}$ = outdoor air seasonal temperature, F~~

T_{solair} = sol-air temperature, °F

T_{sp} = supply plenum air temperature-, °F

UA_c = UA value for the interface between the conditioned space and the buffer space, Btu/°F

UA_{walls} = UA value for the buffer space exterior walls, Btu/°F

UA_{roof} = UA value for the buffer space exterior roof, Btu/°F

UA_c = UA value for the interface between the conditioned space and the buffer space, Btu/°F

ZLC_c = zone loss coefficient for the interface between the conditioned space and the buffer space, Btu/°F

ZLC_{total} = sum of all the zone loss coefficients for the buffer space , Btu/°F

α = solar absorptivity of roof, = 0.70 for standard roof; 0.45 for cool roof, 0.0 for ducts located (outdoors)

ΔT_e = temperature rise across heat exchanger-, °F

ΔT_r = temperature difference between indoors and the ambient for the return-, °F

ΔT_s = temperature difference between indoors and the ambient for the supply, °F

ΔT_{sky} = reduction of sol-air temperature due to sky radiation, = 6.5°F for standard roof and cool roof, 0.0°F for ducts located outdoors, °F.

$\Delta T_{sol,hr}$ = hourly difference between sol-air and indoor temperatures, °F

$\Delta T_{sol,\,season}$ = energy weighted seasonal average difference between sol-air and indoor temperatures, °F

$h_{adj,hr}$ = hourly distribution efficiency adjustment factor

$\eta_{dist,seasonal}$ = seasonal distribution system efficiency

$h_{dist,hr}$ = hourly distribution system efficiency

ρ = density of air = 0.075, lb/ft^3

NG.4 Air Distribution Diagnostic Measurement and Default Assumptions

NG.4.1 Instrumentation Specifications

The instrumentation for the air distribution diagnostic measurements shall conform to the following specifications:

NG.4.1.1 Pressure Measurements

All pressure measurements shall be measured with measurement systems (i.e. sensor plus data acquisition system) having an accuracy of ± 0.2 Pa. All pressure measurements within the duct system shall be made with static pressure probes.

~~NG.4.1.2 Fan Flow Measurements~~

~~All measurements of distribution fan flows shall be made with measurement systems (i.e. sensor plus data acquisition system) having an accuracy of ±5% reading or ±5 cfm whichever is greater.~~

NG.4.1.2~~3~~ Duct Leakage Measurements

The measurement of air flows during duct leakage testing shall have an accuracy of ±3% of measured flow using digital gauges.

All instrumentation used for ~~fan flow and~~ duct leakage diagnostic measurements shall be calibrated according to the manufacturer's calibration procedure to conform to the above accuracy requirement. All testers performing diagnostic tests shall obtain evidence from the manufacturer that the equipment meets the accuracy specifications. The evidence shall include equipment model, serial number, the name and signature of the person of the test laboratory verifying the accuracy, and the instrument accuracy. All diagnostic testing equipment is subject to re-calibration when the period of the manufacturer's guaranteed accuracy expires.

NG.4.2 Apparatus

NG.4.2.1 Duct ~~Leakage~~Pressurization

The apparatus for fan pressurization duct leakage measurements shall consist of a duct pressurization and flow measurement device meeting the specifications in Section NG.4.1.2~~3~~.

NG.4.3 Procedure

The following sections identify input values for building and HVAC system (including ducts) using either default or diagnostic information.

NG.4.3.1 Building Information and Defaults

The calculation procedure for determining air distribution efficiencies requires the following building information:

1. climate zone for the building,
2. conditioned floor area, ~~and~~
3. number of stories,
4. areas and U-values of surfaces enclosing space between the roof and a ceiling, and
5. surface area of ductwork if ducts are located outdoors or in multiple spaces.

~~NG4.3.1.1 Default Input~~

Using default values rather than diagnostic procedures produce relatively low air distribution-system efficiencies.

Default values shall be obtained from following sections:

1. the location of the duct system in Section NG.4.3.4,
2. the surface area and insulation level of the ducts in Sections NG.4.3.3, NG.4.3.4 and (NG).4.3.6,
3. the system fan flow in Section NG.4.3.7, and
4. the leakage of the duct system in Section NG.4.3.8.

NG.4.3.2 Diagnostic Input

Diagnostic inputs are used for the calculation of improved duct efficiency. The diagnostics include observation of various duct characteristics and measurement of duct leakage and system fan flows as described in Sections NG.4.3.5 through NG.4.3.8. These observations and measurements replace those assumed as default values.

The diagnostic procedures include:

- M~~m~~easurement of total duct system leakage as described in Section NG.4.3.8.
- Measurement of duct surface area if ducts are located outdoors or in multiple spaces as described in Section 4.3.3.
- ~~Observe~~ Observation of the insulation level for the supply (R_s) and return (R_r) ducts outside the conditioned space as described in Section NG.4.3.6.
- Observ~~e~~ation of the presence of a cool roof.
- Observation of the~~e~~ presence of an outdoor air economizer.

NG.4.3.3 Duct Surface Area

The supply-side and return-side duct surface areas shall be calculated separately. If the supply or return duct is located in more than one ~~zone~~space, the area of that duct in each ~~zone~~space ~~shall may~~ shall be calculated separately. The duct surface area shall be determined using one of the following methods.

NG.4.3.3.1 Default Duct Surface Area

The default duct surface area for supply and return shall be calculated as follows:

For supplies:

Equation NG-1 $$A_{s,total} = K_s A_{floor}$$

Where K_s (supply duct surface area coefficient) shall be ~~1~~ 0.25 for systems serving the top~~one~~ story ~~buildings~~only, 0.125 for systems serving the top story plus one other~~two story buildings~~, and 0.083~~33~~ for systems servings three or more stories~~story buildings~~.

For returns:

Equation NG-2 $$A_{r,total} = K_r \quad A_{floor}$$

Where K_r (return duct surface area coefficient) shall be 0.1~~0~~5 for systems serving the top story only, 0.125 for systems serving the top story plus one other, and 0.08 for systems servings three or more stories.~~for one story building and 0.1 for two or more stories.~~

If ducts are located outdoors, the outdoor duct surface area shall be calculated from the duct layout on the plans using measured duct lengths and nominal inside diameters (for round ducts) or inside perimeters (for rectangular ducts) of each outdoor duct run in the building that is within the scope of the calculation procedure. When using the default duct area, outdoor supply duct surface area shall be less than or equal to the default supply duct surface area; outdoor return duct surface area shall be less than or equal to the default return duct surface area.

The surface area of ducts located in the buffer space between ceilings and roofs shall be calculated from:

Equation NG-3 $$A_{s,buffer} = A_{s,total} - A_{s,outdoors}$$

Equation NG-4 $$A_{r,buffer} = A_{r,total} - A_{r,outdoors}$$

NG4.3.3.2 Measured Duct Surface Area

Measured duct surface areas shall be used when the outdoor duct surface area measured from the plans is greater than default duct surface area for either supply ducts or return ducts. If a duct system passes through multiple spaces that have different ambient temperature conditions as specified in Section 4.3.5, the duct surface area shall be measured for each space individually. The duct surface area shall be calculated from measured duct lengths and nominal inside diameters (for round ducts) or inside perimeters (for rectangular ducts) of each duct run located in buffer spaces or outdoors.

NG.4.3.4 Duct Location

Duct systems covered by this procedure are those specified in the Standards § 144(k)3.

~~Ducts shall be considered to be installed in spaces between ceilings and roofs or building exteriors if more than 50 lineal feet of duct or 75 percent of the duct surface area is located in a space between an insulated ceiling and the roof, and that space is either a) vented to the outdoors, and/or b) insulated from the indoors.~~

NG.4.3.5 Climate and Duct Ambient Conditions ~~for Ducts in the Space Between an Insulated Ceiling and the Roof~~

Duct ambient temperatures for both heating and cooling shall be obtained from Tables NG-1a to NG-1e. The duct ambient temperatures for the cool roofs from Table NG-1c shall be used for ducts located in unconditioned spaces other than attics and outside. Indoor dry-bulb (T_{in}) temperature for cooling is 78°F. The indoor dry-bulb temperature for heating is 70°F.

Table NG-1a ~~Default~~ Assumptions for Duct Ceiling/Roof Space Ambient Temperature, Ceiling Insulation, No roof insulation, Non-vented Attic

~~**TABLES ARE NOT YET POPULATED, AS RESULTS ARE STILL BEING REVIEWED.**~~

Climate zone	Duct Ambient Temperature for Heating, T amb, heat ~~Theat,amb~~	Duct Ambient Temperature for Cooling, T amb,, cool Standard roof without economizer~~Tcool, amb~~	Duct Ambient Temperature for Cooling, T amb,, cool Cool roof without economizer	Duct Ambient Temperature for Cooling, T,amb, cool Standard roof with economizer	Duct Ambient Temperature for Cooling, T amb,, cool Cool roof with economizer
1	47.3~~52.0~~	78.0~~60.0~~	72.4	81.4	75.3
2	41.8~~48.0~~	93.2~~87.0~~	84.8	97.1	88.2
3	47.8~~55.0~~	83.5~~80.0~~	77.1	86.6	79.8
4	43.9~~53.0~~	89.1~~79.0~~	82.0	92.0	84.5
5	46.2~~49.0~~	83.8~~74.0~~	77.5	86.0	79.3
6	50.8~~57.0~~	85.4~~81.0~~	79.4	87.3	81.1
7	49.3~~62.0~~	86.8~~74.0~~	80.7	88.7	82.3
8	47.3~~58.0~~	91.3~~80.0~~	84.2	93.1	85.9
9	48.7~~53.0~~	92.5~~87.0~~	85.4	94.4	87.2
10	45.7~~53.0~~	95.9~~91.0~~	87.9	98.2	90.0
11	43.9~~48.0~~	95.5~~95.0~~	88.1	98.4	90.5
12	44.2~~50.0~~	94.3~~91.0~~	86.7	97.3	89.3
13	43.3~~48.0~~	100.9~~92.0~~	92.5	103.6	94.9
14	37.2~~39.0~~	99.0~~99.0~~	90.6	102.7	93.8
15	47.2~~50.0~~	102.9~~102.~~	95.8	104.3	97.1
16	37.9~~32.0~~	92.0~~80.0~~	83.8	96.3	87.5

Table NG-1b Default Assumptions for Duct Ceiling/Roof Space Ambient Temperature, Ceiling Insulation, No roof insulation, Vented Attic

~~TABLES ARE NOT YET POPULATED, AS RESULTS ARE STILL BEING REVIEWED.~~

Climate zone	Duct Ambient Temperature for Heating, $T_{amb, heat}$	Duct Ambient Temperature for Cooling, $T_{amb., cool}$ Standard roof without economizer	Duct Ambient Temperature for Cooling, $T_{amb., cool}$ Cool roof without economizer	Duct Ambient Temperature for Cooling, $T_{amb, cool}$ Standard roof with economizer	Duct Ambient Temperature for Cooling, $T_{amb., cool}$ Cool roof with economizer
1	48.6	73.7	69.8	76.7	72.5
2	43.4	87.9	82.2	91.7	85.7
3	48.9	79.2	74.8	82.1	77.4
4	45.1	84.4	79.5	87.1	81.9
5	47.7	79.7	75.4	81.9	77.3
6	51.8	81.0	76.8	81.0	78.5
7	50.6	82.4	78.1	84.1	79.7
8	48.7	86.4	81.5	88.2	83.2
9	49.3	88.4	83.4	90.2	85.1
10	47.1	90.9	85.4	93.2	87.6
11	44.8	90.9	85.8	93.7	88.3
12	45.2	89.6	84.4	92.5	87.0
13	44.5	95.1	89.3	97.7	91.7
14	38.6	93.7	87.8	97.2	91.0
15	48.4	98.6	93.7	100.1	95.1
16	38.7	86.9	81.1	91.1	84.9

Table NG-1c Default Assumptions for Duct Ceiling/Roof Space Ambient Temperature, Ceiling Insulation, Roof insulation, Non-vented Attic

~~TABLES ARE NOT YET POPULATED, AS RESULTS ARE STILL BEING REVIEWED.~~

Climate zone	Duct Ambient Temperature for Heating, $T_{amb, heat}$	Duct Ambient Temperature for Cooling, $T_{amb., cool}$ Standard roof without economizer	Duct Ambient Temperature for Cooling, $T_{amb., cool}$ Cool roof without economizer	Duct Ambient Temperature for Cooling, $T_{amb, cool}$ Standard roof with economizer	Duct Ambient Temperature for Cooling, $T_{amb., cool}$ Cool roof with economizer
1	56.4	77.6	74.8	79.9	76.9
2	54.8	86.9	82.8	89.7	85.4
3	56.4	81.1	77.9	83.3	79.9
4	54.6	84.9	81.3	87.0	83.3
5	56.6	81.3	78.2	82.9	79.6
6	57.1	83.9	80.1	85.5	81.6
7	55.7	84.9	81.1	86.5	82.5
8	54.5	88.0	83.6	89.5	85.0
9	59.9	83.6	81.6	84.2	82.1
10	55.9	89.4	85.6	91.2	87.2
11	53.1	89.7	86.1	91.8	87.9
12	53.7	88.7	84.8	90.9	86.8
13	53.6	93.1	89.0	95.2	90.9
14	48.7	91.9	87.6	94.7	90.1
15	56.1	95.9	92.3	97.0	93.4
16	48.5	86.6	82.4	89.6	85.1

Table NG-1d Default Assumptions for Duct Ceiling/Roof Space Ambient Temperature, Roof Insulation, No Ceiling Insulation, Non-vented Attic

~~TABLES ARE NOT YET POPULATED, AS RESULTS ARE STILL BEING REVIEWED.~~

Climate zone	Duct Ambient Temperature for Heating, $T_{amb, heat}$	Duct Ambient Temperature for Cooling, $T_{amb., cool}$ Standard roof without economizer	Duct Ambient Temperature for Cooling, $T_{amb., cool}$ Cool roof without economizer	Duct Ambient Temperature for Cooling, $T_{amb, cool}$ Standard roof with economizer	Duct Ambient Temperature for Cooling, $T_{amb., cool}$ Cool roof with economizer
1	59.8	78.5	77.3	79.3	78.0
2	59.0	82.5	80.8	83.5	81.6
3	60.1	80.0	78.6	80.7	79.3
4	58.9	81.6	80.1	82.3	80.7
5	60.0	80.0	78.6	80.6	79.1
6	60.4	81.2	79.5	81.8	80.0
7	59.7	81.7	79.9	82.2	80.5
8	58.8	83.1	81.1	83.7	81.7
9	59.9	83.6	81.6	84.2	82.1
10	58.5	83.4	81.8	84.0	82.3
11	58.5	83.7	82.1	84.3	82.7
12	58.3	83.2	81.6	83.8	82.1
13	58.3	85.1	83.3	85.7	83.9
14	54.5	84.5	82.8	85.4	83.5
15	58.6	86.1	84.6	86.5	84.9
16	55.6	82.4	80.7	83.4	81.5

Table NG-1e Default Assumptions for Duct Ambient Temperature, Ducts Located Outdoors

~~**TABLES ARE NOT YET POPULATED, AS RESULTS ARE STILL BEING REVIEWED.**~~

Climate zone	Duct Ambient Temperature for Heating, $T_{amb, heat}$	Duct Ambient Temperature for Cooling, $T_{amb., cool}$ Without economizer	Duct Ambient Temperature for Cooling, $T_{amb., cool}$ With economizer
1	47.7	62.7	65.4
2	42.5	76.0	79.7
3	47.6	68.5	71.3
4	43.5	73.3	75.8
5	47.1	69.5	71.7
6	50.7	70.0	71.8
7	50.2	71.6	73.2
8	48.3	74.6	76.4
9	47.0	78.1	80.0
10	46.7	79.9	82.1
11	42.8	81.3	83.8
12	43.4	79.4	82.0
13	43.0	83.2	85.4
14	36.4	81.8	85.1
15	48.1	90.7	92.2
16	35.7	73.5	78.1

NG.4.3.6 Duct Wall Thermal Resistance

NG.4.3.6.1 Default Duct Insulation R value

Default duct wall thermal resistance for new buildings is R-8.0~~4.2~~, the mandatory requirement for ducts installed in newly constructed buildings, additions and new or replacement ducts installed in existing buildings. Default duct wall thermal resistance for existing ducts in existing buildings is R-4.2. An air film resistance of 0.7 [h ft^2 ^{o}F/BTU] shall be added to the duct insulation R value to account for external and internal film resistance.

NG.4.3.6.2 Diagnostic Duct Wall Thermal Resistance

Duct wall thermal resistance shall be determined from the manufacturer's specification observed during diagnostic inspection. If ducts with multiple R values are installed, the lowest duct R value shall be used. If a duct with a higher R value than 8.0~~4.2~~ is installed, the R-value shall be clearly stated on the building plans and a visual inspection of the ducts must be performed to verify the insulation values. ~~In case the space on top of the duct boot is limited and can not be inspected, the insulation R value within two feet of the boot to which the duct is connected may be excluded from the determination of the overall system R value.~~

NG.4.3.7 ~~System~~ Total Fan Flow

~~*NG.4.3.7.1 Default Fan Flow*~~

The ~~default cooling~~ total fan flow ~~with~~ for an air conditioner ~~and for heating with~~ or a heat pump for **all climate zones** shall be ~~calculated as follows:~~

~~$Q_e = 1.25\ A_{floor}$ (4.3)~~

equal to 400 cfm/rated ton with rated tons defined by unit scheduled capacity at the conditions the unit's ARI rating standard from Section 112 of the Standard. Airflow through heating only furnaces shall be based on 21.7 cfm/kBtuh rated output capacity.

NG.4.3.8 Duct Leakage

NG.4.3.8.1 Duct Leakage Factor for Delivery Effectiveness Calculations

Default duct leakage factors for the Proposed Design shall be obtained from Table NG-2, using the "not Tested" values.

Duct leakage factors for the Standard Design shall be obtained from Table NG-2, using the appropriate "Tested" value.

Duct leakage factors shown in Table NG-2 shall be used in calculations of delivery effectiveness.

Table NG-2 Duct Leakage Factors

	~~Duct Leakage Diagnostic Test Performed using Section 4.3.8.2 Procedures~~	as = ar =
~~Untested dDuct systems in buildings built prior to June 1, 2001~~	~~Not tested~~	~~0.86~~
Untested d~~D~~uct systems ~~in buildings built after June 2, 2001~~	~~Not tested~~	0.82~~89~~
~~Duct systems in buildings of all ages, System tested after HVAC system completion~~	~~(Q_{total} 25) Total leakage is less than 0.06 Qe~~	~~0.96~~
Sealed and tested duct systems in existing buildings, System tested after HVAC equipment and/or duct -installation		0.915
Sealed and tested ~~duct systems in~~ new ~~buildings~~duct systems.~~,~~ System tested after HVAC system installation	~~(Q_{total} 25) Total leakage is less than 0.06 Qe~~	0.96

NG.4.3.8.2 Diagnostic Duct Leakage

~~**Diagnostic duct leakage measurement is used to quantify total leakage for the calculation of air distribution efficiency. To obtain the improved duct efficiency for sealing the duct system, a diagnostic leakage test as described in section NG.4.3.8.2.1 or NG.4.3.8.2.2 must be performed.**~~

Diagnostic duct leakage measurement is used by installers and raters to verify that total leakage meets the criteria for any sealed duct system specified in the compliance documents. Table NG-3 shows the leakage criteria and test procedures that may be used to demonstrate compliance. In addition to the minimum tests shown, existing duct systems may be tested to show they comply with the criteria for new duct systems.

Table NG-3 Duct Leakage Tests

Case	User and Application	Leakage criteria, % of total fan flow	Procedure
Sealed and tested new duct systems	Installer Testing HERS Rater Testing	6%	NG 4.3.8.2.1
Sealed and tested altered existing duct systems	Installer Testing HERS Rater Testing	15% Total Duct Leakage	NG 4.3.8.2.1
	Installer Testing and Inspection HERS Rater Testing and Verification	60% Reduction in Leakage and Visual Inspection	NG 4.3.8.2.2 RC4.3.6 and RC4.3.7
	Installer Testing and Inspection HERS Rater Testing and Verification	Fails Leakage Test but All Accessible Ducts are Sealed And Visual Inspection	NG 4.3.8.2.3 RC4.3.6 and RC4.3.7

NG.4.3.8.2.1 ~~Diagnostic~~ Total Duct Leakage Test from Fan Pressurization of Ducts

The objective of this procedure is for an installer to determine or a rater to verify the total leakage of a new or altered duct system. The total duct leakage shall be determined by pressurizing both the supply and return ducts to 25 Pascals with all ceiling diffusers/grilles and HVAC equipment installed. When existing ducts are to be altered, this test shall be performed prior to and after duct sealing. The following procedure shall be used for the fan pressurization tests:

1. Verify that the air handler, supply and return plenums and all the connectors, transition pieces, duct boots and registers are installed. The entire system shall be included in the test.
2. For newly installed or altered ducts, verify that cloth backed rubber adhesive duct tape has not been used.
3. Seal all the supply and return registers, except for one return register or the system fan access. Verify that all outside air dampers and /or economizers are sealed prior to pressurizing the system.
2. Attach the fan flowmeter device to the duct system at the unsealed register or access door.
3. Install a static pressure probe at a supply.
4. Adjust the fan flowmeter to produce a 25 Pascal (0.1 in water) pressure difference between the supply duct and the outside or the building space with the entry door open to the outside.
5. Record the flow through the flowmeter ($Q_{total,25}$) - this is the total duct leakage flow at 25 Pascals.
6. Divide the leakage flow by the total fan flow and convert to a percentage. If the leakage flow percentage is less than 6% for new duct systems or less than 15% for altered duct systems, the system passes.

Duct systems that have passed this total leakage test will be sampled by a HERS rater to show compliance.

~~When the diagnostic leakage test is performed and the measured total duct leakage is less than 6% of the total fan flow, the duct leakage factor shall be 0.96 as shown in Table NG-2.~~

~~*NG.4.3.8.2.2 Diagnostic Duct Leakage Using An Aerosol Sealant Closure System*~~

~~Same procedure as for other closure systems.~~

3

NG 4.3.8.2.2 Leakage Improvement from Fan Pressurization of Ducts

For altered existing duct systems which have a higher lekage percentage than the Total Duct leakage criteria in Section NG 4.3.8.2.1, the objective of this test is to show that the original leakage is reduced through duct sealing as specified in Table NG-3. The following procedure shall be used:.

1. Use the procedure in NG 4.3.8.2.1 to measure the leakage before commencing duct sealing.
2. After sealing is complete use the same procedure to measure the leakage after duct sealing.
3. Subtract the sealed leakage from the original leakage and divide the remainder by the original leakage. If the leakage reduction is 60% or greater of the original leakage, the system passes.
4. Complete the Visual Inspection specified in NG 4.3.8.2.4.

Duct systems that have passed this leakage reduction test and the visual inspection test will be sampled by a HERS rater to show compliance.

NG 4.3.8.2.3 Sealing of All Accessible Leaks

For altered existing duct systems that do not pass the Total Leakage test (NG 4.3.8.2.1), the objective of this test is to show that all accessible leaks are sealed and that excessively damaged ducts have been replaced. The following procedure shall be used:

1. Complete each of the leakage tests
1. Complete the Visual Inspection as specified in NG 4.3.8.2.4.

All duct systems that could not pass either the total leakage test or the leakage improvement test will be tested by a HERS rater to show compliance. This is a sampling rate of 100%.

NG 4.3.8.2.4 Visual Inspection of Accessible Duct Sealing

For altered existing duct systems that fail to be sealed to 15% of total fan flow, the objective of this inspection is to confirm that all accessible leaks have been sealed and that excessively damaged ducts have been replaced. The following procedure shall be used:

1. Visually inspect to verify that the following locations have been sealed:

- Connections to plenums and other connections to the forced air unit
- Refrigerant line and other penetrations into the forced air unit
- Air handler door panel (do not use permanent sealing material, metal tape is acceptable)
- Register boots sealed to surrounding material
- Connections between lengths of duct, as well as connections to takeoffs, wyes, tees, and splitter boxes.

2. Visually inspect to verify that portions of the duct system that are excessively damaged have been replaced. Ducts that are considered to be excessively damaged are:

- Flex ducts with the vapor barrier split or cracked with a total linear split or crack length greater than 12 inches
- Crushed ducts where cross-sectional area is reduced by 30% or more
- Metal ducts with rust or corrosion resulting in leaks greater than 2 inches in any dimension
- Ducts that have been subject to animal infestation resulting in leaks greater than 2 inches in any dimension

NG 4.3.8.4 Labeling requirements for tested systems

A sticker shall be affixed to the exterior surface of the air handler access door with the following text in 14 point font:

"The leakage of the air distribution ducts was found to be CFM @ 25 Pascals or % of total fan flow.

This system (check one):

*• Has a leakage rate that is **equal to or lower** than the prescriptive requirement of 6% leakage for new duct systems or 15% leakage for alterations to existing systems. It meets the prescriptive requirements of California Title 24 Energy Efficiency Standards.*

*• Has a leakage rate **higher than** 6% leakage for new duct systems or 15% leakage for altered existing systems. It does NOT meet the meet or exceed the prescriptive requirements of the Title 24 standards. However, all accessible ducts were sealed.*

Signed:

Print name:

Print Company Name:

Print Contractor License No:

Print Contractor Phone No:

Do not remove sticker"

NG.4.4 Delivery Effectiveness (DE) Calculations

Seasonal delivery effectiveness shall be calculated using the seasonal design temperatures from Table NG-1.

NG.4.4.1 Calculation of Duct Zone Temperatures

The temperatures of the duct zones outside the conditioned space are determined in Section NG.4.3.5 for seasonal conditions for both heating and cooling.

For heating:

Equation NG-5 $T_{amb,s} = T_{amb,r} = T_{amb,heat}$

For cooling:

Equation NG-6 $T_{amb,s} = T_{amb,r} = T_{amb,cool}$

Where

Tamb,heat and Tamb,cool are determined from values in Table NG.4.1.

If the ducts are not all in the same location, the duct ambient temperature for use in the delivery effectiveness and distribution system efficiency calculations shall be determined using an area weighted average of the duct ambient temperatures for heating and cooling:

Equation NG-7 $$T_{amb,heat} = \frac{A_{duct,buffer} \times T_{amb\,heat,buffer} + A_{duct,outdoors} \times T_{amb\,heat,outdoors}}{A_{duct,buffer} + A_{duct,outdoors}}$$

Equation NG-8 $$T_{amb,cool} = \frac{A_{duct,buffer} \times T_{ambcool,buffer} + A_{duct,outdoors} \times T_{ambcool,outdoors}}{A_{duct,buffer} + A_{duct,outdoors}}$$

where the buffer space ambient temperature shall correspond to the location yielding the lowest seasonal delivery (effectiveness).

Alternatively, the duct ambient temperature for use in the delivery effectiveness and distribution system efficiency calculations can be determined using an area weighted average of the duct zone temperatures for heating and cooling in all (spaces):

Equation NG-9 $$T_{amb,heat} = \frac{A_{duct,1} \times T_{ambheat,1} + A_{duct,2} \times T_{ambheat,2} + \ldots + A_n \times T_{ambheat,n}}{A_{duct,1} + A_{duct,2} + \ldots + A_{duct,n}}$$

Equation NG-10 $$T_{amb,cool} = \frac{A_{duct,1} \times T_{ambcool,1} + A_{duct,2} \times T_{ambcool,2} + \ldots + A_n \times T_{ambcool,n}}{A_{duct,1} + A_{duct,2} + \ldots + A_{duct,n}}$$

NG.4.4.2 Seasonal Delivery Effectiveness (DE)

The supply and return conduction fractions, B_s and B_r, shall be calculated as follows:

Equation NG-11 $$B_s = \exp\left(\frac{-A_{s,out}}{1.08\, Q_e\, R_s}\right)$$

Equation NG-12 $$B_r = \exp\left(\frac{-A_{r,out}}{1.08\, Q_e\, R_r}\right)$$

The temperature difference across the heat exchanger in the following equation is used:

for heating:

Equation NG-13 $\Delta T_e = 55$ ~~(4.8)~~

for cooling:

Equation NG-14 $\Delta T_e = -20$ ~~(4.9)~~

The temperature difference between the building conditioned space and the ambient temperature surrounding the supply, ΔT_s, and return, ΔT_r, shall be calculated using the indoor and the duct ambient temperatures.

Equation NG-15 $\Delta T_s = T_{in} - T_{amb,s}$ ~~(4.10)~~

Equation NG-16 $\Delta T_r = T_{in} - T_{amb,r}$ ~~(4.11)~~

The seasonal delivery effectiveness for heating or cooling systems shall be calculated using:

Equation NG-17 $$DE_{seasonal} = a_s B_s - a_s B_s (1 - B_r a_r) \frac{\Delta T_r}{\Delta T_e} - a_s (1 - B_s) \frac{\Delta T_s}{\Delta T_e}$$

NG.4.5 Seasonal Distribution System Efficiency

Seasonal distribution system efficiency shall be calculated using delivery effectiveness, equipment, load, and recovery factors calculated for seasonal conditions.

NG.4.5.1 Equipment Efficiency Factor (F_{equip})

F_{equip} is 1.

NG.4.5.2 Thermal Regain (F_{regain})

The reduction in building load due to regain of duct losses shall be calculated using the thermal regain factor. ~~The default thermal regain factors are provided in Table NG-3.~~

~~*Table NG-3 Thermal Regain Factors*~~

~~**Supply Duct Location**~~	~~**Thermal Regain Factor [F_{regain}]**~~
~~Ceiling/Roof Space~~	~~0.10~~

Equation NG-18

$$F_{regain} = \frac{ZLC_c}{ZLC_{total}}$$

where:

Equation NG-19

$$ZLC_c = UA_c + 60Q_e(1-a_r)rCp$$

Equation NG-20

$$ZLC_{total} = \sum_{buffer\,spaces\,surfaces} UA + Q_{buffer}\,rCp + 60Q_e(1-a_r)rCp$$

Equation NG-21 $UA_{buffer\ spaces\ surfaces} = UA_c + UA_{walls} + UA_{roof}$

Equation NG-22 $Q_{buffer} = 0.038(60)A_{walls}\rho c_p$ for non-vented buffer spaces

Equation NG-23 $Q_{buffer} = 0.25(60)A_{roof}\rho c_p$ for -vented buffer spaces

Thermal regain for ducts located outdoors shall be equal to 0.0. If the ducts are not all in the same location, the regain shall be determined using an area weighted average of the regain for heating and cooling:

Equation NG-24

$$F_{regain} = \frac{A_{duct,1} \times F_{regain,1} + A_{duct,2} \times F_{regain,2} + \ldots + A_{duct,n} \times F_{regain,n}}{A_{duct,1} + A_{duct,2} + \ldots + A_{duct,n}}$$

NG.4.5.3 Recovery Factor (F_{recov})

The recovery factor, F_{recov}, is calculated based on the thermal regain factor, F_{regain}, and the duct losses without return leakage.

Equation NG-25 $$F_{recov} = 1 + F_{regain}\left(\frac{1 - a_s B_s + a_s B_s (1 - B_r)\frac{\Delta T_r}{\Delta T_e} + a_s (1 - B_s)\frac{\Delta T_s}{\Delta T_e}}{DE_{seasonal}}\right)$$

NG.4.5.4 Seasonal Distribution System Efficiency

The seasonal distribution system efficiency shall be calculated using the seasonal delivery effectiveness from section NG.4.4.2, the equipment efficiency factor from section NG.4.5.1, and the recovery factor from section NG.4.5.3. Note that $DE_{seasonal}$, F_{equip}, F_{recov} must be calculated separately for cooling and heating conditions. Distribution system efficiency shall be determined using the following equation:

Equation NG-26 $$h_{dist,seasonal} = 0.98\, DE_{seasonal}\, F_{equip}\, F_{recov}$$

where 0.98 accounts for the energy losses from heating and cooling the duct thermal mass.

NG.4.6 Hourly Distribution System Efficiency

The hourly duct efficiency shall be calculated for each hour using the following equation:

Equation NG-27 $$h_{dist,hr} = \frac{h_{dist,seasonal}}{h_{adj,hr}}, \quad \eta_{dist,hr} \le 1$$

where the hourly efficiency is calculated from the seasonal efficiency and an hourly efficiency adjustment factor. The hourly distribution efficiency shall be less than or equal to 1.0. The hourly duct efficiency adjustment factor shall be calculated from the following equation:

Equation NG-28 $$h_{adj,hr} = 1 + C_{DT} \times \left(\Delta T_{sol,hr} - ?\, T_{sol,season}\right)$$

where the hourly efficiency adjustment factor is calculated from the difference between the hourly roof sol-air temperature and the hourly indoor temperature; the difference between the seasonal average difference between the roof sol-air temperature and the indoor temperature; and a constant derived from regression analysis.

The hourly difference between the roof sol-air temperature and the indoor temperature shall be calculated from the following equation:

Equation NG-29 $$\Delta T_{sol,hr} = T_{solair,hr} - T_{in,hr}$$

The seasonal difference between the roof sol-air temperature and the indoor temperature shall be a load-weighted average of the hourly roof sol-air temperature and the indoor temperature, and shall be calculated from the following equation:

Equation NG-30 $$?\, T_{sol,season} = \frac{\sum_{season} (T_{solair,hr} - T_{in,hr}) E_{hr}}{\sum_{season} E_{hr}}$$

The hourly roof sol-air temperature is a function of the hourly ambient temperature, hourly horizontal solar radiation and the roof surface absorptance; and shall be calculated from the following equation:

Equation NG-31 $$T_{solair,hr} = T_{amb,hr} + \left(\frac{a}{h_o}\right) I_{hor,hr} - ? T_{sky}$$

The hourly efficiency adjustment factor regression coefficient shall be calculated from the following equation:

Equation NG-3~~3~~2 $$C_{DT} = C_0 + {C_R}/{R_s} + C_L Q_{total,25}$$; $C_{DT,cooling} \geq 0.0$; $C_{DT,heating} \leq 0.0$

where coefficients~~constants~~ C_o, C_R, and C_L shall be taken from Table NG-4~~3~~ according to the season (heating or cooling), and the roof type for ducts in the buffer space (Standard or Cool roof) or duct location (if outdoors). The calculated value of C_{DT} for cooling shall be greater than or equal to zero, and the calculated value of C_{DT} for heating shall be less than or equal to zero.

NG.4.6.3 Hourly Efficiency Adjustment Regression Coefficients ~~and Data~~

~~**TABLES ARE NOT YET POPULATED, AS RESULTS ARE STILL BEING REVIEWED.**~~

Table NG-4~~3~~ Coefficients

	Cooling			Heating		
	Standard roof	Cool roof	Outdoors	Standard roof	Cool roof	Outdoors
Co	0.000486	0.000538	-0.002763	-0.000430	-0.000418	0.000677
CR	0.002810	0.003207	0.008702	-0.003978	-0.003659	-0.002614
CL	0.002143	0.003386	0.031009	-0.012079	-0.011277	-0.012190

ACM NH-2005

Appendix NH - ~~Seasonal Energy Efficiencies of Single-Zone Non-Residential Air Distribution Systems in the Space Between an Insulated Ceiling and the Roof in California Climate Zones~~ Test Nonresidential Air Distribution Systems

	Input Assumptions for Non-Residential Duct Systems		
CASE CODE	Total duct Leakage, %	Supply duct R Value	Return duct R value
1001	22	4.2	4.2
1002	22	8	8
1003	8	4.2	4.2
1004	8	8	8

~~CASE~~	~~Climate Zone 1~~				~~Climate Zone 2~~			
~~CODE~~	~~1 Story~~		~~2 Story~~		~~1 Story~~		~~2 Story~~	
	~~Heating,%~~	~~Cooling,%~~	~~Heating,%~~	~~Cooling,%~~	~~Heating,%~~	~~Cooling,%~~	~~Heating,%~~	~~Cooling,%~~
~~1001~~	~~0.750~~	~~0.810~~	~~0.779~~	~~0.812~~	~~0.737~~	~~0.674~~	~~0.767~~	~~0.702~~
~~1002~~	~~0.793~~	~~0.813~~	~~0.810~~	~~0.814~~	~~0.783~~	~~0.717~~	~~0.800~~	~~0.734~~
~~1003~~	~~0.820~~	~~0.866~~	~~0.852~~	~~0.869~~	~~0.811~~	~~0.744~~	~~0.843~~	~~0.775~~
~~1004~~	~~0.868~~	~~0.869~~	~~0.886~~	~~0.871~~	~~0.861~~	~~0.792~~	~~0.880~~	~~0.810~~
	~~Climate Zone 3~~				~~Climate Zone 4~~			
	~~1 Story~~		~~2 Story~~		~~1 Story~~		~~2 Story~~	
	~~Heating,%~~	~~Cooling,%~~	~~Heating,%~~	~~Cooling,%~~	~~Heating,%~~	~~Cooling,%~~	~~Heating,%~~	~~Cooling,%~~
~~1001~~	~~0.759~~	~~0.730~~	~~0.788~~	~~0.755~~	~~0.753~~	~~0.738~~	~~0.782~~	~~0.763~~
~~1002~~	~~0.801~~	~~0.763~~	~~0.817~~	~~0.778~~	~~0.795~~	~~0.770~~	~~0.812~~	~~0.784~~
~~1003~~	~~0.827~~	~~0.786~~	~~0.858~~	~~0.813~~	~~0.822~~	~~0.792~~	~~0.854~~	~~0.818~~
~~1004~~	~~0.873~~	~~0.822~~	~~0.891~~	~~0.837~~	~~0.869~~	~~0.826~~	~~0.888~~	~~0.841~~
	~~Climate Zone 5~~				~~Climate Zone 6~~			
~~CODE~~	~~1 Story~~		~~2 Story~~		~~1 Story~~		~~2 Story~~	
	~~Heating,%~~	~~Cooling,%~~	~~Heating,%~~	~~Cooling,%~~	~~Heating,%~~	~~Cooling,%~~	~~Heating,%~~	~~Cooling,%~~
~~1001~~	~~0.740~~	~~0.760~~	~~0.770~~	~~0.779~~	~~0.766~~	~~0.722~~	~~0.794~~	~~0.747~~
~~1002~~	~~0.785~~	~~0.784~~	~~0.803~~	~~0.795~~	~~0.806~~	~~0.757~~	~~0.822~~	~~0.771~~
~~1003~~	~~0.813~~	~~0.813~~	~~0.845~~	~~0.834~~	~~0.832~~	~~0.780~~	~~0.863~~	~~0.807~~
~~1004~~	~~0.863~~	~~0.839~~	~~0.882~~	~~0.851~~	~~0.876~~	~~0.818~~	~~0.894~~	~~0.834~~
	~~Climate Zone 7~~				~~Climate Zone 8~~			
	~~1 Story~~	~~2 Story~~	~~1 Story~~	~~2 Story~~				
	~~Heating,%~~	~~Cooling,%~~	~~Heating,%~~	~~Cooling,%~~	~~Heating,%~~	~~Cooling,%~~	~~Heating,%~~	~~Cooling,%~~
~~1001~~	~~0.781~~	~~0.760~~	~~0.809~~	~~0.779~~	~~0.769~~	~~0.752~~	~~0.797~~	~~0.770~~
~~1002~~	~~0.819~~	~~0.784~~	~~0.835~~	~~0.795~~	~~0.808~~	~~0.776~~	~~0.825~~	~~0.786~~
~~1003~~	~~0.844~~	~~0.813~~	~~0.873~~	~~0.834~~	~~0.834~~	~~0.809~~	~~0.865~~	~~0.829~~
~~1004~~	~~0.884~~	~~0.839~~	~~0.901~~	~~0.851~~	~~0.878~~	~~0.835~~	~~0.895~~	~~0.847~~
	~~Climate Zone 9~~				~~Climate Zone 10~~			
	~~1 Story~~		~~2 Story~~		~~1 Story~~		~~2 Story~~	
	~~Heating,%~~	~~Cooling,%~~	~~Heating,%~~	~~Cooling,%~~	~~Heating,%~~	~~Cooling,%~~	~~Heating,%~~	~~Cooling,%~~
~~1001~~	~~0.753~~	~~0.702~~	~~0.782~~	~~0.723~~	~~0.753~~	~~0.674~~	~~0.782~~	~~0.696~~
~~1002~~	~~0.795~~	~~0.734~~	~~0.812~~	~~0.746~~	~~0.795~~	~~0.710~~	~~0.812~~	~~0.723~~
~~1003~~	~~0.822~~	~~0.775~~	~~0.854~~	~~0.798~~	~~0.822~~	~~0.756~~	~~0.854~~	~~0.780~~
~~1004~~	~~0.869~~	~~0.811~~	~~0.888~~	~~0.824~~	~~0.869~~	~~0.797~~	~~0.888~~	~~0.811~~

~~CASE CODE~~	~~Climate Zone 11~~				~~Climate Zone 12~~			
	~~1 Story~~		~~2 Story~~		~~1 Story~~		~~2 Story~~	
	~~Heating,%~~	~~Cooling,%~~	~~Heating,%~~	~~Cooling,%~~	~~Heating,%~~	~~Cooling,%~~	~~Heating,%~~	~~Cooling,%~~
~~1001~~	~~0.737~~	~~0.645~~	~~0.767~~	~~0.669~~	~~0.743~~	~~0.674~~	~~0.773~~	~~0.696~~
~~1002~~	~~0.783~~	~~0.686~~	~~0.800~~	~~0.700~~	~~0.788~~	~~0.710~~	~~0.805~~	~~0.723~~
~~1003~~	~~0.811~~	~~0.737~~	~~0.843~~	~~0.762~~	~~0.815~~	~~0.756~~	~~0.848~~	~~0.780~~
~~1004~~	~~0.861~~	~~0.783~~	~~0.880~~	~~0.798~~	~~0.864~~	~~0.797~~	~~0.883~~	~~0.811~~
	~~Climate Zone 13~~				~~Climate Zone 14~~			
	~~1 Story~~		~~2 Story~~		~~1 Story~~		~~2 Story~~	
	~~Heating,%~~	~~Cooling,%~~	~~Heating,%~~	~~Cooling,%~~	~~Heating,%~~	~~Cooling,%~~	~~Heating,%~~	~~Cooling,%~~
~~1001~~	~~0.737~~	~~0.667~~	~~0.767~~	~~0.689~~	~~0.709~~	~~0.617~~	~~0.740~~	~~0.642~~
~~1002~~	~~0.783~~	~~0.704~~	~~0.800~~	~~0.717~~	~~0.759~~	~~0.663~~	~~0.778~~	~~0.677~~
~~1003~~	~~0.811~~	~~0.751~~	~~0.843~~	~~0.776~~	~~0.789~~	~~0.717~~	~~0.824~~	~~0.745~~
~~1004~~	~~0.861~~	~~0.793~~	~~0.880~~	~~0.807~~	~~0.846~~	~~0.768~~	~~0.866~~	~~0.784~~
	~~Climate Zone 15~~				~~Climate Zone 16~~			
	~~1 Story~~		~~2 Story~~		~~1 Story~~		~~2 Story~~	
	~~Heating,%~~	~~Cooling,%~~	~~Heating,%~~	~~Cooling,%~~	~~Heating,%~~	~~Cooling,%~~	~~Heating,%~~	~~Cooling,%~~
~~1001~~	~~0.743~~	~~0.596~~	~~0.773~~	~~0.622~~	~~0.686~~	~~0.730~~	~~0.719~~	~~0.755~~
~~1002~~	~~0.788~~	~~0.645~~	~~0.805~~	~~0.660~~	~~0.742~~	~~0.763~~	~~0.761~~	~~0.778~~
~~1003~~	~~0.815~~	~~0.703~~	~~0.848~~	~~0.731~~	~~0.773~~	~~0.786~~	~~0.809~~	~~0.813~~
~~1004~~	~~0.864~~	~~0.758~~	~~0.883~~	~~0.775~~	~~0.835~~	~~0.822~~	~~0.856~~	~~0.837~~

ACM NI–2005

Appendix NI - Alternate Default Fenestration Thermal Properties

Scope

This appendix applies to fenestration excepted from Section 116 (a) 2 and Section 116 (a) 3 of the Standard.

> "***EXCEPTION to Section 116 (a) 2**: If the fenestration product is site-built fenestration in a building covered by the nonresidential standards with less than 10,000 square feet of site-built fenestration or is a skylight, the default U-factor may be the applicable U-factor as set forth in the Nonresidential ACM Manual.*"
>
> "***EXCEPTION to Section 116 (a) 3:** If the fenestration product is site-built fenestration in a building covered by the nonresidential standards with less than 10,000 square feet of site-built fenestration or is a skylight, the default SHGC may be calculated according to Equation 116-A.*"

Purpose

To present alternate default U-factors and the calculation method for determining an alternate default SHGC, and to describe the responsibilities of energy consultants, designers, architects, builders, installers, and building departments when an alternate default value is used for determining compliance.

NI.1 Solar Heat Gain Coefficient

~~Determination of Solar Heat Gain Coefficients for Fenestration without Certified NFRC Values~~

~~This section describes the calculation method, eligibility criteria, and documentation requirements for determining the SHGC of fenestration for which there is no certified NFRC value.~~

~~Site-Assembled Fenestration Products and Field-fabricated Fenestration~~

This section describes the alternative calculation method for determining compliance for ~~site-assembled and field-fabricated products similar to~~ eligible site-built -products.

~~**Site-assembled** fenestration includes both field-fabricated fenestration and fenestration whose frame is previously cut or formed by a manufacturer with the specific intention of being used with a glazing assembly to create a complete fenestration product.~~

~~**Field-fabricated** fenestration is a fenestration product whose frame is made at the construction site of standard dimensional lumber or other materials that were not previously cut or otherwise formed with the specific intention of being used to fabricate a fenestration product.~~

~~For site-assembled and field-fabricated fenestration, use t~~The following equation may be used to calculate the fenestration product's SHGC ~~for fenestration that is~~ used to determine compliance. Convert the center of glass SHGC, $SHGC_c$, from the manufacturer's documentation to a value for the fenestration product with framing, $SHGC_{fen,}$

$SHGC_{fen}$ = 0.08 + 0.86 X $SHGC_c$

Where:

$SHGC_{fen}$ is the SHGC for the fenestration including glass and frame.

$SHGC_c$ is the SHGC for the center of glass alone, and

~~$SHGC_{fen}$ is the SHGC for the fenestration including glass and frame.~~

~~**Manufactured Fenestration Products**~~

~~This section describes the alternative calculation method for determining compliance for manufactured products that do not have SHGC values published by the National Fenestration Rating Council (NFRC) in the *NFRC Certified Products Directory*.~~

~~Manufactured Fenestration Products without a SHGC certified to the NFRC are similar to those that have an SHGC certified to NFRC. They are complete products, shipped from the manufacturer with the frame and glazing already assembled. These products may be listed in the directory with their U-factors, but without an SHGC. As of January 1, 2001, the number of these products is very small and includes only those with non-planar or translucent glazing. To determine compliance with the building efficiency standards, the center of glass SHGC from the manufacturer's documentation must be converted to an SHGC that includes the framing effect. Use the following equation:~~

~~**$SHGC_{fen}$ = 0.11 + 0.81 x $SHGC_c$**~~

~~Where:~~

~~$SHGC_c$ is the SHGC for the center of glass alone, and~~

~~$SHGC_{fen}$ is the SHGC for the fenestration including glass and frame.~~

NI.1.2 Responsibilities for SHGC Compliance

This section describes the responsibilities of energy consultants, designers, architects, builders, installers, and building departments when this alternative calculation method is used for determining compliance with SHGC requirements.

NI.1.2.1 Energy Consultants, Designers, Architects

~~*Products with SHGCs Certified to NFRC*~~

~~SHGCs can be found in the NFRC *Certified Products Directory*, SV section. Contact NFRC at 301-589-6372 for a copy of the directory or go to NFRC's website at www.nfrc.org for an online database of the directory.~~

~~*Field-Fabricated Fenestration, Site-Assembled Fenestration and*~~ *Site-Built Fenestration Products without SHGC* ~~*Certified to*~~ *Rated Using NFRC Procedures*

The procedure described below applies only to skylights and to site-built fenestration in buildings with less than 10,000 ft^2 of site-built fenestration.

~~does not apply to site-assembled vertical glazing in buildings with (a) 100,000 sf or more of conditioned floor area and (b) 10,000 sf or more of vertical fenestration area. For these glazing assemblies, use the NFRC 100SB Label Certificate procedure described above. (For projects where the building has 100,000 sf or more~~

~~of conditioned space and there is 10,000 sf or more of fenestration area, the SHGC of the vertical glazing must be obtained using NFRC 100SB and must be verified by a Label Certificate for Site-Built Products. The Label Certificate must be included with the plans or be provided on site at the time of inspection.~~)

To determine compliance with the efficiency standards, the center of glass SHGC from the manufacturer's documentation for the proposed glazing must be converted to an $SHGC_{fen}$ for the fenestration that includes the framing effect.

For the Prescriptive compliance method, the $SHGC_{fen}$ is then entered into the prescriptive ENV-1 form, Part 2 of 2 and must appear on the building plans.

For the Performance compliance method, the $SHGC_{fen}$ output information printed on the Performance ENV-1 form must be listed on the building plans. The PERF-1 and Performance ENV-1 forms must appear on the plans. The building plan window schedule list must indicate the proposed total $SHGC_{fen}$ values for each fenestration assembly, and these values must be equal to the SHGCs listed on the Performance ENV-1 computer form. (Note: an under-calculation of space conditioning energy can result from entering either too low or too high an $SHGC_{fen}$ for the product.) ~~The proposed design $SHGC_{fen}$ values are entered into the computer program to automatically generate the energy budget of the standard design and the energy use of the proposed design. The building complies if the total energy use of the proposed design is the same or less than the standard design energy budget.~~

Permit applications must include heat gain documentation for the Building Plan Checker. This documentation must include a copy of the manufacturer's documentation showing the $SHGC_c$, center of glass alone and the calculation used to determine the $SHGC_{fen}$. If the proposed design uses multiple fenestration products or site-assembled fenestration products, a calculation for each different $SHGC_{fen}$ must be attached to the plans along with each glass unit manufacturer's documentation.

Building plans shall identify all site-built fenestration and all site-built fenestration without SHGCs rated using NFRC procedures.

Mixed Fenestration Types

If mixed fenestration is included in the compliance analysis, then the compliance submittal must demonstrate which are certified fenestration products and which are non-certified fenestration or site-built ~~assembled~~ fenestration products. The manufacturer's documentation and calculations for each product must be included in the submittal, and either the ENV-1 or PERF-1 form must be included on the building plans.

NI.1.2.2 Builder and Installer Responsibilities

The builder is responsible for ~~as~~ensuring that the glass documentation showing the SHGC used for determining compliance is provided to the installer. The builder is responsible for obtaining an NFRC Label Certificate for Site-Built Products for the building's site-built fenestration ~~vertical glazing~~ if the building ~~is 100,000 sf or more and~~ has 10,000 ~~sf~~ ft^2 or more of site-built fenestration. ~~vertical glazing.~~

The builder is also responsible for ~~as~~ensuring that the persons preparing compliance documentation are specifying products that the builder intends to install. The builder must ~~as~~ensure ~~-~~that the glazing contractor installs the glass with the same $SHGC_c$ as used for compliance and that the building inspector is provided with manufacturers' documentation showing the $SHGC_c$ for the actual glass product installed. The builder should verify that these fenestration products are clearly shown on the building plans before fenestration products are purchased and installed.

NI.1.2.3 Building Department Responsibilities

Plan Checker

The building department plan checker is responsible for ~~as~~ensuring that the plans identify all site-built fenestration ~~which fenestration is site-assembled and which is not~~.

The plan-checker is responsible for verifying that for skylights and site-built fenestration using the alternate default SHGC calculation:

1. the $SHGC_{fen}$ and $SHGC_c$ ~~for non-certified fenestration products or site-assembled products is~~ are identified on the plans, ~~that~~

2. calculations have been provided showing the conversion from $SHGC_c$ to $SHGC_{fen}$, ~~and that~~

3. manufacturer documentation of the $SHGC_c$ has been provided for each of the fenestration products using alternate default SHGC calculations, ~~to be installed~~and

4. the building has less than 10,000 ft^2 of site-built fenestration.

Plans should be consistent with the compliance documentation, the calculations showing the conversion from $SHGC_c$ to $SHGC_{fen}$, and Prescriptive ENV-1 Part 2 of 2 or Performance ENV-1.

Building Inspector

The building department field inspector is responsible for ~~as~~ensuring that the building using an alternate default SHGC calculation has less than 10,000 ft^2 of site-built fenestration.

~~manufacturer's documentation has been provided for the installed fenestration. The inspector is responsible for checking the NFRC label for manufactured fenestration products, or the NFRC 100SB Label Certificate for site-built products where appropriate as described below [see "Energy Consultants, Designers, Architects: Products with SHGCs Certified to NFRC" above].~~

~~1.All manufactured fenestration products must have either an NFRC label or manufacturer's label with default SHGCs from Table 1-E.~~

~~2.All site-assembled fenestration products in buildings 100,000 sf of conditioned floor area or more and 10,000 sf of vertical fenestration area or more must have either an NFRC Label Certificate for Site-Built Fenestration Products or a manufacturer's certificate with a default SHGC from Table 1-E.~~

~~3.Site- assembled vertical fenestration products in buildings less than 100,000 sf, or buildings with less than 10,000 sf of vertical glazing, may use either of the rating/labeling methods described in (b) above, or the $SHGC_{fen}$ calculation method described in this section.~~

~~4.Horizontal glazing that does not have a certified NFRC SHGC may use any of the above methods for determining and labeling or certifying the SHGC.~~

The field inspector is responsible for ~~as~~ensuring that the ~~certified SHGC, or~~ $SHGC_c$ and $SHGC_{fen}$~~,~~ for the installed fenestration is consistent with the plans, the Prescriptive ENV-1 Part 2 of 2 or the Performance PERF-1 and Performance ENV-1, and that manufacturer documentation is consistent with the product installed in the building. ~~Plans shall indicate which fenestration is site-assembled or is a fenestration product without SHGCs certified to the NFRC.~~

NI.2 Thermal Transmittance (U-Factor)

Table NI-1 provides default U-factors for skylights and for site-built fenestration in buildings with less than 10,000 ft^2 of site-built fenestration. ~~covered by the Nonresidential Energy Standards. The default table may be used only for the following:~~

~~? Site-assembled and field-fabricated glazed wall systems in buildings covered by the Nonresidential Energy Standards that have less than 100,000 square feet of conditioned floor area and less than 10,000 square feet of vertical glazing.~~

~~? Skylights in buildings covered by the Nonresidential Energy Standards.~~

~~2~~ The default Table NI-1 is consistent with default U-factors published in Table 4~~5~~, Chapter 30~~29~~, ASHRAE Fundamentals Handbook, 2001~~(1997)~~, which is referenced in the Energy Standards. Fenestration products fitting the two descriptions above may still use U-factors obtained through NFRC if available.

NI.2.1 Responsibilities for U-factor Compliance

This section describes the responsibilities of energy consultants, designers, architects, builders, installers, and building departments when Table NI-1 is used for determining compliance with the U-factor requirements of the Efficiency Standards.

NI.2.1.1 Energy Consultants, Designers, Architects

~~*Products with U-factor Certified to NFRC*~~

~~U-factor values can be found in the NFRC *Certified Products Directory.* Contact NFRC at 301-589-6372 for a copy of the directory or go to NFRC's website at www.nfrc.org for an online database of the directory.~~

~~*Field-Fabricated Fenestration, Site-Assembled Fenestration and Fenestration Products*~~ *Site-Built Fenestration without U-factor* ~~*Certified to*~~ *Rated Using NFRC Procedures*

The procedure described below applies only to skylights and to site-built fenestration in buildings with less than 10,000 ft^2 of site-built fenestration. To determine compliance with the efficiency standards, the Glazing Type and Frame Type shown in Table NI-1 must be identified from the manufacturer's documentation for the proposed glazing.

For the Prescriptive compliance method, the U-factor must be selected from Table NI-1 for this Glazing Type and Frame Type and entered into the prescriptive ENV-1 form, Part 2 of 2, and must appear on the building plans.

For the Performance compliance method, the U-factor output information printed on the Performance ENV-1 form must be listed on the building plans. The PERF-1 and Performance ENV-1 forms must appear on the plans. The building plan window schedule list must indicate the proposed total U-factors for each fenestration assembly, and these values must be equal to or less than the U-factors listed on the Performance ENV-1 computer form. ~~The proposed design U-factors are entered into the computer program to automatically generate the energy use of the proposed design. The building complies if the total energy use of the proposed design is the same or less than the standard design energy budget.~~

Permit applications must include fenestration U-factor documentation for the Building Plan Checker. This documentation must include a copy of the manufacturer's documentation showing the Glazing Type information – number of panes, spacing of panes, glass type, gas fill type, coating emissivity and location – and the Frame Type – frame material type, presence of thermal breaks, and identification of structural glazing (glazing with no frame) that is used to determine the U-factor. If the proposed design uses multiple fenestration products or site-assembled fenestration products, manufacturer's documentation for each different U-factor for each glass unit must be attached to the plans ~~for each glass unit~~. Manufacturer's documentation must be provided for each U-factor used for compliance.

Building plans shall identify all site-built fenestration and all site-built fenestration without U-factors rated using NFRC procedures.

Mixed Fenestration Types

If mixed fenestration is included in the compliance analysis, then the compliance submittal must demonstrate which are certified fenestration products and which are non-certified fenestration or site-assembled fenestration products. The manufacturer's documentation and calculations for each product must be included in the submittal, and either the ENV-1 or PERF-1 form must be included on the building plans.

NI.2.1.2 Builder and Installer Responsibilities

The builder is responsible for ~~as~~ensuring that the glass documentation showing the U-factor used for determining compliance is provided to the installer. The builder is responsible for ~~as~~ensuring that the persons preparing compliance documentation are specifying products that the builder intends to install. The builder is also responsible for ~~as~~ensuring that the installer installs glass with U-factors the same or lower than the U-factors ~~as~~ used for compliance and ~~as~~ensuring that the field inspector for the building department is provided with manufacturer's documentation showing the U-factor and method of determining U-factor for the actual fenestration product installed. The builder should verify that these fenestration products are clearly shown on the building plans before fenestration products are purchased and installed.

NI.2.1.3 Building Department Responsibilities

Plan Checker

The building department plan checker is responsible for ~~as~~ensuring that the plans identify all site-built fenestration. ~~which fenestration is site-assembled and which is not. The plan-checker is responsible for verifying that the U-factor~~

The plan checker shall ensure that for skylights and site-built fenestration using alternate default U-factors: ~~non-certified fenestration products or site-assembled products is~~

1. U-factors are identified on the plans, ~~that~~
2. the Glazing Type and Frame Type and Table NI-1 have been provided ~~showing~~ documenting the method of determining the U-factor, ~~and that~~
3. manufacturer documentation of the ~~U-factor~~ Glazing Type and Frame Type has been provided for the each of the fenestration products using alternate default U-factors, and ~~to be installed.~~
4. the building has less than 10,000 ft^2 of site-built fenestration.

Plans should be consistent with the compliance documentation, the Glazing Type and Frame Type and Table NI-1 values, and Prescriptive ENV-1 Part 2 of 2 or Performance ENV-1.

Building Inspector

The building department field inspector is responsible for ensuring that the building using an alternate default U-factor has less than 10,000 ft^2 of site-built fenestration.

The building department field inspector is responsible for ~~assuring~~ ensuring that manufacturer's documentation has been provided for the installed fenestration. The field inspector is responsible for ~~as~~ensuring that the U-factor for the installed fenestration is consistent with the plans, the Prescriptive ENV-1 Part 2 of 2 or the Performance PERF-1, and Performance ENV-1, and that manufacturer documentation is consistent with the product installed in the building.

~~Plans shall indicate which fenestration is site-assembled or is a fenestration product without U-factor certified to NFRC.~~

Table NI-1 – ~~Assembly~~ Alternate U-Factors for Skylights and Eligible[1] Site-Built Fenestration ~~Unlabeled Glazed Wall Systems (Site-Built Windows) and Unlabeled Skylights~~

Product Type		**Vertical Installation**				**Sloped Installation**						
		Unlabeled Glazed Wall Systems (Site Built Windows) (includes site assembled fixed windows only, does not include operable windows)				**Unlabeled Skylight with Curb** (includes glass/plastic, flat/domed, fixed/operable)				**Unlabeled Skylight without Curb** (includes glass/plastic, flat/domed, fixed/operable)		
Frame Type		Aluminum without Thermal Break	Aluminum with Thermal Break	Wood/Vinyl	Structural Glazing	Aluminum without Thermal Break	Aluminum with Thermal Break	Reinforced Vinyl/ Aluminum Clad Wood	Wood/Vinyl	Aluminum without Thermal Break	Aluminum with Thermal Break	Structural Glazing
ID	**Glazing Type**											
	Single Glazing											
1	1/8" glass	1.22	1.11	0.98	1.11	1.98	1.89	1.75	1.47	1.36	1.25	1.25
2	1/4" acrylic/polycarb	1.08	0.96	0.84	0.96	1.82	1.73	1.60	1.31	1.21	1.10	1.10
3	1/8" acrylic/polycarb	1.15	1.04	0.91	1.04	1.90	1.81	1.68	1.39	1.29	1.18	1.18
	Double Glazing											
4	1/4" airspace	0.79	0.68	0.56	0.63	1.31	1.11	1.05	0.84	0.82	0.70	0.66
5	1/2" airspace	0.73	0.62	0.50	0.57	1.30	1.10	1.04	0.84	0.81	0.69	0.65
6	1/4" argon space	0.75	0.64	0.52	0.60	1.27	1.07	1.00	0.80	0.77	0.66	0.62
7	1/2" argon space	0.70	0.59	0.48	0.55	1.27	1.07	1.00	0.80	0.77	0.66	0.62
	Double Glazing, *e*=0.60 on surface 2 or 3											
8	1/4" airspace	0.76	0.65	0.53	0.61	1.27	1.08	1.01	0.81	0.78	0.67	0.63
9	1/2" airspace	0.69	0.58	0.47	0.54	1.27	1.07	1.00	0.80	0.77	0.66	0.62
10	1/4" argon space	0.72	0.61	0.49	0.56	1.23	1.03	0.97	0.76	0.74	0.63	0.58
11	1/2" argon space	0.67	0.56	0.44	0.51	1.23	1.03	0.97	0.76	0.74	0.63	0.58
	Double Glazing, *e*=0.40 on surface 2 or 3											
12	1/4" airspace	0.74	0.63	0.51	0.58	1.25	1.05	0.99	0.78	0.76	0.64	0.60
13	1/2" airspace	0.66	0.55	0.44	0.51	1.24	1.04	0.98	0.77	0.75	0.64	0.59
14	1/4" argon space	0.69	0.57	0.46	0.53	1.18	0.99	0.92	0.72	0.70	0.58	0.54
15	1/2" argon space	0.63	0.51	0.40	0.47	1.20	1.00	0.94	0.74	0.71	0.60	0.56
	Double Glazing, *e*=0.20 on surface 2 or 3											
16	1/4" airspace	0.70	0.59	0.48	0.55	1.20	1.00	0.94	0.74	0.71	0.60	0.56
17	1/2" airspace	0.62	0.51	0.39	0.46	1.20	1.00	0.94	0.74	0.71	0.60	0.56
18	1/4" argon space	0.64	0.53	0.42	0.49	1.14	0.94	0.88	0.68	0.65	0.54	0.50
19	1/2" argon space	0.57	0.46	0.35	0.42	1.15	0.95	0.89	0.68	0.66	0.55	0.51
	Double Glazing, *e*=0.10 on surface 2 or 3											

Product Type		Vertical Installation				Sloped Installation						
		Unlabeled Glazed Wall Systems (Site Built Windows) (includes site assembled fixed windows only, does not include operable windows)				**Unlabeled Skylight with Curb** (includes glass/plastic, flat/domed, fixed/operable)				**Unlabeled Skylight without Curb** (includes glass/plastic, flat/domed, fixed/operable)		
Frame Type		Aluminum without Thermal Break	Aluminum with Thermal Break	Wood/Vinyl	Structural Glazing	Aluminum without Thermal Break	Aluminum with Thermal Break	Reinforced Vinyl/ Aluminum Clad Wood	Wood/Vinyl	Aluminum without Thermal Break	Aluminum with Thermal Break	Structural Glazing
20	1/4" airspace	0.68	0.57	0.45	0.52	1.18	0.99	0.92	0.72	0.70	0.58	0.54
21	1/2" airspace	0.59	0.48	0.37	0.44	1.18	0.99	0.92	0.72	0.70	0.58	0.54
22	1/4" argon space	0.62	0.51	0.39	0.46	1.11	0.91	0.85	0.65	0.63	0.52	0.47
23	1/2" argon space	0.55	0.44	0.33	0.39	1.13	0.93	0.87	0.67	0.65	0.53	0.49
	Double Glazing, *e*=0.05 on surface 2 or 3											
24	1/4" airspace	0.67	0.56	0.44	0.51	1.17	0.97	0.91	0.70	0.68	0.57	0.52
25	1/2" airspace	0.57	0.46	0.35	0.42	1.17	0.98	0.91	0.71	0.69	0.58	0.53
26	1/4" argon space	0.60	0.49	0.38	0.44	1.09	0.89	0.83	0.63	0.61	0.50	0.45
27	1/2" argon space	0.53	0.42	0.31	0.38	1.11	0.91	0.85	0.65	0.63	0.52	0.47
	Triple Glazing											
28	1/4" airspaces	0.63	0.52	0.41	0.47	1.12	0.89	0.84	0.64	0.64	0.53	0.48
29	1/2" airspaces	0.57	0.46	0.35	0.41	1.10	0.87	0.81	0.61	0.62	0.51	0.45
30	1/4" argon spaces	0.60	0.49	0.38	0.43	1.09	0.86	0.80	0.60	0.61	0.50	0.44
31	1/2" argon spaces	0.55	0.45	0.34	0.39	1.07	0.84	0.79	0.59	0.59	0.48	0.42
	Triple Glazing, *e*=0.20 on surface 2,3,4, or 5											
32	1/4" airspaces	0.59	0.48	0.37	0.42	1.08	0.85	0.79	0.59	0.60	0.49	0.43
33	1/2" airspaces	0.52	0.41	0.30	0.35	1.05	0.82	0.77	0.57	0.57	0.46	0.41
34	1/4" argon spaces	0.54	0.44	0.33	0.38	1.02	0.79	0.74	0.54	0.55	0.44	0.38
35	1/2" argon spaces	0.49	0.38	0.28	0.33	1.01	0.78	0.73	0.53	0.54	0.43	0.37
	Triple Glazing, *e*=0.20 on surfaces 2 or 3 and 4 or 5											
36	1/4" airspaces	0.55	0.45	0.34	0.39	1.03	0.80	0.75	0.55	0.56	0.45	0.39
37	1/2" airspaces	0.48	0.37	0.26	0.31	1.01	0.78	0.73	0.53	0.54	0.43	0.37
38	1/4" argon spaces	0.50	0.39	0.29	0.34	0.99	0.75	0.70	0.50	0.51	0.40	0.35
39	1/2" argon spaces	0.45	0.34	0.24	0.29	0.97	0.74	0.69	0.49	0.50	0.39	0.33
	Triple Glazing, *e*=0.10 on surfaces 2 or 3 and 4 or 5											
40	1/4" airspaces	0.54	0.43	0.32	0.37	1.01	0.78	0.73	0.53	0.54	0.43	0.37
41	1/2" airspaces	0.46	0.35	0.25	0.29	0.99	0.76	0.71	0.51	0.52	0.41	0.36
42	1/4" argon spaces	0.48	0.38	0.27	0.32	0.96	0.73	0.68	0.48	0.49	0.38	0.32
43	1/2" argon spaces	0.42	0.32	0.21	0.26	0.95	0.72	0.67	0.47	0.48	0.37	0.31

	Product Type	**Vertical Installation**				**Sloped Installation**						
		Unlabeled Glazed Wall Systems (Site Built Windows) (includes site assembled fixed windows only, does not include operable windows)				**Unlabeled Skylight with Curb** (includes glass/plastic, flat/domed, fixed/operable)				**Unlabeled Skylight without Curb** (includes glass/plastic, flat/domed, fixed/operable)		
	Frame Type	Aluminum without Thermal Break	Aluminum with Thermal Break	Wood/Vinyl	Structural Glazing	Aluminum without Thermal Break	Aluminum with Thermal Break	Reinforced Vinyl/ Aluminum Clad Wood	Wood/Vinyl	Aluminum without Thermal Break	Aluminum with Thermal Break	Structural Glazing
	Quadruple Glazing, *e*=0.10 on surfaces 2 or 3 and 4 or 5											
44	1/4" airspaces	0.49	0.38	0.28	0.33	0.97	0.74	0.69	0.49	0.50	0.39	0.33
45	1/2" airspaces	0.43	0.32	0.22	0.27	0.94	0.71	0.66	0.46	0.47	0.36	0.30
46	1/4" argon spaces	0.45	0.34	0.24	0.29	0.93	0.70	0.65	0.45	0.46	0.35	0.30
47	1/2" argon spaces	0.41	0.30	0.20	0.24	0.91	0.68	0.63	0.43	0.44	0.33	0.28
48	1/4" krypton spaces	0.41	0.30	0.20	0.24	0.88	0.65	0.60	0.40	0.42	0.31	0.25

[1] To be eligible, the site-built fenestration must be in a building with less than 10,000 ft^2 of site-built fenestration.

ACM NJ-2005

Appendix NJ - Acceptance Requirements for Nonresidential Buildings

NJ.1 Purpose and Scope

ACM NJ defines acceptance procedures that must be completed before credit can be claimed for certain compliance measures. The procedures apply to nonresidential, high-rise residential and hotel/motel buildings as defined by the California Energy Commission's Energy Efficiency Standards for Nonresidential Buildings.

NJ.2 Introduction

Acceptance Requirements are defined as the application of targeted inspection checks and functional and performance testing conducted to determine whether specific building components, equipment, systems, and interfaces between systems conform to the criteria set forth in the Standards and to related construction documents (plans or specifications). Acceptance Requirements can effectively improve code compliance and help determine whether equipment meets operational goals and whether it should be adjusted to increase efficiency and effectiveness.

This section describes the process for completing the Acceptance Requirements. The steps include the following:

- Document plans showing sensor locations, devices, control sequences and notes,
- Review the installation, perform acceptance tests and document results, and
- Document the operating and maintenance information, complete installation certificate and indicate test results on the Certificate of Acceptance, and submit the Certificate to the building department prior to receive a final occupancy permit.

Acceptance testing is not intended to take the place of commissioning or test and balance procedures that a building owner might incorporate into a building project. It is an adjunct process focusing only on demonstrating compliance with the Standards.

The installing contractor, engineer of record or owners agent shall be responsible for reviewing the plans and specifications to assure they conform to the Acceptance Requirements. This is typically done prior to signing a Certificate of Compliance.

The installing contractor, engineer of record or owners agent shall be responsible for providing all necessary instrumentation, measurement and monitoring, and undertaking all required acceptance requirement procedures. They shall be responsible for correcting all performance deficiencies and again implementing the acceptance requirement procedures until all specified systems and equipment are performing in accordance with the Standards.

The installing contractor, engineer of record or owners agent shall be responsible for documenting the results of the acceptance requirement procedures including paper and electronic copies of all measurement and monitoring results. They shall be responsible for performing data analysis, calculation of performance indices and crosschecking results with the requirements of the Standard. They shall be responsible for issuing a Certificate of Acceptance. Building departments shall not release a final Certificate of Occupancy until a Certificate of Acceptance is submitted that demonstrates that the specified systems and equipment have been shown to be performing in accordance with the Standards. The installing contractor, engineer of record or owners agent upon completion of undertaking all required acceptance requirement procedures shall record their State of California

Contractor's License number or their State of California Professional Registration License Number on each Certificate of Acceptance that they issue.

NJ.3 Outdoor Air

NJ.3.1 Variable Air Volume Systems Outdoor Air Acceptance

NJ.3.1.1 Construction Inspection

Prior to Acceptance Testing, verify and document the following:

- Outside air flow station is calibrated *OR* a calibration curve of outside air vs. outside air damper position, inlet vane signal, or VFD signal was completed during system TAB procedures.

NJ.3.1.2 Equipment Testing~~Start-up~~

Step 1: If the system has an outdoor air economizer, force the economizer high limit to disable economizer control (e.g. for a fixed drybulb high limit, lower the setpoint below the current outdoor air temperature)

Step 2: Drive all VAV boxes to the greater of the minimum airflow or 30% of the total design airflow. Verify and document the following:

- Measured outside airflow CFM corresponds to no less than 90% of the total value found on the Standards Mechanical Plan Check document MECH-3, Column H or Column I (which ever is greater).
- System operation stabilizes within 15 minutes after test procedures are initiated (no hunting).

Step 3: Drive all VAV boxes to achieve design airflow. Verify and document the following:

- Measured outside airflow CFM corresponds to no less than 90% of the total value found on Standards Mechanical Plan Check document MECH-3, Column H or Column I (which ever is greater).
- System operation stabilizes within 15 minutes after test procedures are initiated (no hunting).

NJ.3.2 Constant Volume System Outdoor Air Acceptance

NJ.3.2.1 Construction Inspection

Prior to Acceptance Testing, verify and document the following:

- The system has a fixed or motorized minimum outdoor air damper, or an economizer capable of maintaining a minimum outdoor air damper position.

NJ.3.2.2 Equipment Testing

Step 1: If the system has an outdoor air economizer, force the economizer high limit to disable economizer control (e.g. for a fixed drybulb high limit, lower the setpoint below the current outdoor air temperature)

- Measured outside airflow CFM with damper at minimum position corresponds to no less than 90% of the total value found on the Standards Mechanical Plan Check document MECH-3, Column H or Column I (which ever is greater).

NJ.4 Packaged HVAC Systems

Acceptance requirements apply only to constant volume, direct expansion (DX) packaged systems with gas furnaces or heat pumps.

NJ.4.1 Constant Volume Packaged HVAC Systems Acceptance

NJ.4.1.1 Construction Inspection

Prior to Performance Testing, verify and document the following:

- Thermostat is located within the zone that the HVAC system serves.
- Space temperature thermostat is factory-calibrated (proof required) or field-calibrated.
- Appropriate temperature deadband has been programmed.
- Appropriate occupied, unoccupied, and holiday schedules have been programmed.
- Appropriate pre-occupancy purge has been programmed per Standards Section 121(c)2.
- Economizer lockout control sensor, if applicable, is factory-calibrated (proof required) or field-calibrated and setpoint properly set (refer to the *ECONOMIZERS* acceptance requirements section for detail).
- Demand control ventilation controller, if applicable, is factory-calibrated (proof required) or field-calibrated and setpoint properly set (refer to the *DEMAND CONTROL VENTILATION* acceptance requirements section for detail).

NJ.4.1.2 Equipment Testing

Step 1: Simulate heating load during occupied condition (e.g. by setting time schedule to include actual time and placing thermostat heating setpoint above actual temperature). Verify and document the following:

- Supply fan operates continually during occupied condition.
- Gas-fired furnace, heat pump or electric heater, if applicable, stages on.
- No cooling is provided by the unit.
- Outside air damper is open to the minimum position.

Step 2: Simulate “no-load” during occupied condition (e.g. by setting time schedule to include actual time and placing thermostat heating setpoints below actual temperature and cooling setpoint below actual temperature). Verify and document the following:

- Supply fan operates continually during occupied condition.
- Neither heating or cooling is provided by the unit.
- Outside air damper is open to the minimum position.

Step 3: If there is an economizer, simulate cooling load and economizer operation, if applicable, during occupied condition (e.g. by setting time schedule to include actual time and placing thermostat cooling setpoint below actual temperature). Verify and document the following:

- Supply fan operates continually during occupied condition.
- Refer to the *ECONOMIZERS* acceptance requirements section for testing protocols.
    - No heating is provided by the unit.

Step 4: If there is no economizer, simulate cooling load during occupied condition (e.g. by setting time schedule to include actual time and placing thermostat cooling setpoint below actual temperature). Verify and document the following:

- Supply fan operates continually during occupied condition.
- Compressor(s) stage on.
- No heating is provided by the unit.

- Outside air damper is open to the minimum position.

Step 5: Change the time schedule force the unit into unoccupied mode. Verify and document the following:

- Supply fan turns off.
- Outside air damper closes completely.

Step 6: Simulate heating load during setback conditions (e.g. by setting time schedule to exclude actual time and placing thermostat setback heating setpoint above actual temperature). Verify and document the following:

- Supply fan cycles on.
- Gas-fired furnace, heat pump or electric heater, if applicable, stages on.
- No cooling is provided by the unit.
- Supply fan cycles off when heating equipment is disabled.

Step 7: If there is an economizer, simulate cooling load and economizer operation, if applicable, during unoccupied condition (e.g. by setting time schedule to exclude actual time and placing thermostat setup cooling setpoint below actual temperature). Verify and document the following:

- Supply fan cycles on.
- Refer to the *ECONOMIZERS* acceptance requirements section for testing protocols.
- Supply fan cycles off when call for cooling is satisfied (simulated by lowering the thermostat setpoint to below actual temperature).
- Outside air damper closes when unit cycles off.

Step 8: If there is no economizer, simulate cooling load during setup condition (e.g. by setting time schedule to exclude actual time and placing thermostat setup cooling setpoint above actual temperature). Verify and document the following:

- Supply fan cycles on.
- Compressor(s) stage on to satisfy cooling space temperature setpoint.
- No heating is provided by the unit.
- Supply fan cycles off when cooling equipment is disabled.

Step 9: Simulate manual override during unoccupied condition (e.g. by setting time schedule to exclude actual time or by pressing override button). Verify and document the following:

- System reverts to “occupied” mode and operates as described above to satisfy a heating, cooling, or no load condition.
- System turns off when manual override time period expires.

NJ.5. Air Distribution Systems

Acceptance requirements apply only to systems covered by Section 144(k).

NJ.5.1 Air Distribution Acceptance

NJ.5.1.1 Construction Inspection

Prior to Performance Testing, verify and document the following:

- Drawbands are either stainless steel worm-drive hose clamps or UV-resistant nylon duct ties.

- Flexible ducts are not constricted in any way (for example pressing against immovable objects or squeezed through openings).
- Duct leakage tests shall be performed before access to ductwork and associated connections are blocked by permanently installed construction material.
- Joints and seams are not sealed with a cloth back rubber adhesive tape unless used in combination with mastic and drawbands.
- Duct R-values are verified.
- Insulation is protected from damage and suitable for outdoor service if applicable.

NJ.5.1.2 Equipment Testing

Step 1: Perform duct leakage test per 2003 Nonresidential ACM Approved Manual, Appendix NG, Section 4.3.8.2. Certify the following:

- Duct leakage conforms to the requirements of Section 144(k)..

Step 2: Obtain HERS Rater field verification as required by Chapter 7 and Appendix NG.

NJ.6. Lighting Control Systems

Lighting control testing is performed on:

- Manual Daylighting Controls.
- Automatic Daylighting Controls.
- Occupancy Sensors.
- Automatic Time-switch Control.

NJ.6.1 Automatic Daylighting Controls Acceptance

NJ.6.1.1 Construction Inspection

Prior to Performance Testing, verify and document the following:

- All control devices (photocells) have been properly located, factory-calibrated (proof required) or field-calibrated and set for appropriate set points and threshold light levels.
- Installer has provided documentation of setpoints, setting and programming for each device.
- Luminaires located in either a horizontal daylit area(s) or a vertical daylit area(s) are powered by a separate lighting circuit from non-daylit areas.

NJ.6.1.2 Equipment Testing

Continuous Dimming Control Systems

Step 1: Simulate bright conditions for a continuous dimming control system. Verify and document the following:

- Lighting power reduction is at least 65% under fully dimmed conditions.
- At least one control step reduces the lighting power by at least 30%.
- Only luminaires in daylit zone are affected by daylight control.
- Automatic daylight control system reduces the amount of light delivered to the space uniformly.

- Dimming control system provides reduced flicker operation over the entire operating range per Standards Section 119(e)2.
- Lumen measurements in the space, location of measurements and specific device settings, program settings and other measurements are documented.

Step 2: Simulate dark conditions for a continuous dimming control system. Verify and document the following:

- Automatic daylight control system increases the amount of light delivered to the space uniformly.
- Dimming control system provides reduced flicker operation over the entire operating range per Standards Section 119(e)2.
- Lumen measurements in the space, location of measurements and specific device settings, program settings and other measurements are documented.

Stepped Dimming Control Systems

Step 1: Simulate bright conditions for a stepped dimming control system. Verify and document the following:

- Lighting power reduction is at least 50% under fully dimmed conditions.
- Only luminaires in daylit zone are affected by daylight control.
- Automatic daylight control system reduces the amount of light delivered to the space relatively uniformly as per Section 131(b).
- Automatic daylight control system reduces the amount of light delivered to the space per manufacturer's specifications for power level verses light level.
- Minimum time delay between step changes is 3 minutes to prevent short cycling.
- Lumen measurements in the space, location of measurements and specific device settings, program settings and other measurements are documented.

Step 2: Simulate dark conditions for a stepped dimming control system. Verify and document the following:

- Automatic daylight control system increases the amount of light delivered to the space per manufacturer's specifications for power level verses light level.
- Stepped dimming control system provides reduced flicker over the entire operating range per Standards Section 119(e)2.
- Minimum time delay between step changes is 3 minutes to prevent short cycling.
- Lumen measurements in the space, location of measurements and specific device settings, program settings and other measurements are documented.

Stepped Switching Control Systems

Step 1: Simulate bright conditions for a stepped switching control system. Verify and document the following:

- Lighting power reduction is at least 50% under fully switched conditions per Standards Section 119(e)1.
- Only luminaires in daylit zone are affected by daylight control.
- Automatic daylight control system reduces the amount of light delivered to the space relatively uniformly as per Section 131(b).
- Automatic daylight control system reduces the amount of light delivered to the space per manufacturer's specifications for power level verses light level.
- Single- or multiple-stepped switching controls provide a dead band of at least three minutes between switching thresholds to prevent short cycling.
- Lumen measurements in the space, location of measurements and specific device settings, program settings and other measurements are documented.

Step 2: Simulate dark conditions for a stepped switching control system. Verify and document the following:

- Automatic daylight control system increases the amount of light delivered to the space per manufacturer's specifications for power level verses light level.
- Single- or multiple-stepped switching controls provide a dead band of at least three minutes between switching thresholds to prevent short cycling.
- Lumen measurements in the space, location of measurements and specific device settings, program settings and other measurements are documented.

NJ.6.2 Occupancy Sensor Acceptance

NJ.6.2.1 Construction Inspection

Prior to Performance Testing, verify and document the following:

- Occupancy sensor~~sensitivity~~ has been located to minimize false signals.
- Occupancy sensors do not encounter any obstructions that could adversely affect desired performance.
- Ultrasound occupancy sensors do not emit audible sound.

NJ.6.2.2 Equipment Testing

Step 1: For a representative sample of building spaces, simulate an unoccupied condition. Verify and document the following:

- Lights controlled by occupancy sensors turn off within a maximum of 30 minutes from the start of an unoccupied condition per Standard Section 119(d).
- The occupant sensor does not trigger a false "on" from movement in an area adjacent to the controlled space or from HVAC operation.
- Signal sensitivity is adequate to achieve desired control.

Step 2: For a representative sample of building spaces, simulate an occupied condition. Verify and document the following:

- Status indicator or annunciator operates correctly.
- Lights controlled by occupancy sensors turn on immediately upon an occupied condition, *OR* sensor indicates space is "occupied" and lights are turned on manually (automatic OFF and manual ON control strategy).

NJ.6.3 Manual Daylighting Controls Acceptance

NJ.6.3.1 Construction Inspection

Prior to Performance Testing, verify and document the following:

- If dimming ballasts are specified for light fixtures within the daylit area, make sure they meet all the Standards requirements, including "reduced flicker operation" for manual dimming control systems.

NJ.6.3.2 Equipment Testing

Step 1: Perform manual switching control. Verify and document the following:

- Manual switching or dimming achieves a lighting power reduction of at least 50%.
- The amount of light delivered to the space is uniformly reduced.

NJ.6.4 Automatic Time Switch Control Acceptance

NJ.6.4.1 Construction Inspection

Prior to Performance Testing, verify and document the following:

- Automatic time switch control is programmed with acceptable weekday, weekend, and holiday (if applicable) schedules.
- Document for the owner automatic time switch programming including weekday, weekend, holiday schedules as well as all set-up and preference program settings.
- Verify the correct time and date is properly set in the time switch.
- Verify the battery is installed and energized.
- Override time limit is no more than 2 hours.

NJ.6.4.2 Equipment Testing

Step 1: Simulate occupied condition. Verify and document the following:

- All lights can be turned on and off by their respective area control switch.
- Verify the switch only operates lighting in the ceiling-height partitioned area in which the switch is located.

Step 2: Simulate unoccupied condition. Verify and document the following:

- All non-exempt lighting turn off per Section 131 (d)1.
- Manual override switch allows only the lights in the selected ceiling height partitioned space where the override switch is located, to turn on or remain on until the next scheduled shut off occurs.
- All non-exempt lighting turns off.

NJ.7. Air Economizer Controls

Economizer testing is performed on all built-up systems and on packaged systems per Standards Section 144 (e)1. Air economizers installed by the HVAC system manufacturer and certified to the commission as being factory calibrated and tested do not require field testing.

NJ.7.1 Economizer Acceptance

NJ.7.1.1 Construction Inspection

Prior to Performance Testing, verify and document the following:

- Economizer lockout setpoint complies with Table 144-C per Standards Section 144 (e) 3.
- System controls are wired correctly to ensure economizer is fully integrated (i.e. economizer will operate when mechanical cooling is enabled).
- Economizer lockout control sensor location is adequate (open to air but not exposed to direct sunlight nor in an enclosure; away from sources of building exhaust; at least 25 feet away from cooling towers).
- Relief fan or return fan~~system~~ (if applicable) operates as necessary~~only~~ when the economizer is enabled to control building pressure.
- If no relief fan or return fan~~system~~ is installed, barometric relief dampers are installed to relieve building pressure when the economizer is operating.

NJ.7.1.2 Equipment Testing

Step 1: Simulate a cooling load and enable the economizer by adjusting the lockout control (fixed or differential dry-bulb or enthalpy sensor depending on system type) setpoint. Verify and document the following:

- Economizer damper modulates opens per Standards Section 144 (e)1A to maximum position to satisfy cooling space temperature setpoint.
- Return air damper modulates closed and is completely closed when economizer damper is 100% open.
- Economizer damper is 100% open before mechanical cooling is enabled.
- Relief fan or return fan (if applicable) is operating or barometric relief dampers freely swing open.
- Mechanical cooling is only enabled if cooling space temperature setpoint is not met with economizer at 100% open.
- Doors are not pushed ajar from over pressurization.

Step 2: Continue from Step 1 and disable the economizer by adjusting the lockout control (fixed or differential dry-bulb or enthalpy sensor depending on system type) setpoint. Verify and document the following:

- Economizer damper closes to minimum position.
- Return air damper opens to normal operating position.
- Relief fan (if applicable) shuts off or barometric relief dampers close. Return fan (if applicable) may still operate even when economizer is disabled.
- Mechanical cooling remains enabled until cooling space temperature setpoint is met.

NJ.8. Demand Control Ventilation (DCV) Systems

Demand control ventilation is tested on package systems per Standards Section 121 (c)3.

NJ.8.1 Packaged Systems DCV Acceptance

NJ.8.1.1 Construction Inspection

Prior to Performance Testing, verify and document the following:

- Carbon dioxide control sensor is factory calibrated (proof required) or field-calibrated with an accuracy of no less than 75 ppm.
- The sensor is located in the room between 1ft and 6 ft above the floor.
- System controls are wired correctly to ensure proper control of outdoor air damper system.

NJ.8.1.2 Equipment Testing

Step 1: Simulate a high CO2 load and enable the demand control ventilation by adjusting the demand control ventilation controller setpoint below ambient CO2 levels. Verify and document the following:

- Outdoor air damper modulates opens per Standards to maximum position to satisfy outdoor air requirements specified in Section 121 (c) 4~~, Equation 121-A~~.

Step 2: Continue from Step 1 and disable demand control ventilation by adjusting the demand control ventilation controller setpoint above ambient CO2 levels. Verify and document the following:

- Outdoor air damper closes to minimum position.

NJ.9. Variable Frequency Drive Systems

NJ.9.1 Supply Fan Variable Flow Controls

NJ.9.1.1 Construction Inspection

Prior to Performance Testing, verify and document the following:

- Discharge static pressure sensor is factory calibrated (proof required) or field-calibrated with secondary source.
- Disable discharge static pressure reset sequences to prevent unwanted interaction while performing tests.

NJ.9.1.2 Equipment Testing

Step 1: Drive all VAV boxes to achieve design airflow. Verify and document the following:

- Witness proper response from supply fan (e.g. VFD ramps up to full speed; inlet vanes open full).
- Supply fan maintains discharge static pressure within +/-10% of setpoint.
- Measured maximum airflow corresponds to design and/or TAB report within +/-10%.
- System operation stabilizes within a reasonable amount of time after test procedures are initiated (no hunting).

Step 2: Drive all VAV boxes to minimum flow or to achieve 30% total design airflow whichever is larger. Verify and document the following:

- Witness proper response from supply fan (VFD slows fan speed; inlet vanes close).
- Supply fan maintains discharge static pressure within +/-10% of setpoint.
- System operation stabilizes within a reasonable amount of time after test procedures are initiated (no hunting).

NJ.10. Hydronic System Controls Acceptance

Hydronic controls Acceptance Testing will be performed on:

- Variable Flow Controls
- Automatic Isolation Controls
- Supply Water Temperature Reset Controls
- Water-loop Heat Pump Controls
- Variable Frequency Drive Control

NJ.10.1 Variable Flow Controls

NJ.10.1.1 Construction Inspection

Prior to Acceptance Testing, verify and document the following:

- Valve and piping arrangements were installed per the design drawings to achieve flow reduction requirements.
- Installed valve and hydronic connection pressure ratings meet specifications.

- Installed valve actuator torque characteristics meet specifications.

NJ.10.1.2 Equipment Testing

Step 1: Open all control valves. Verify and document the following:

- System operation achieves design conditions.

Step 2: Initiate closure of control valves. Verify and document the following:

- The design pump flow control strategy achieves flow reduction requirements.
- Ensure all valves operate correctly against the minimum flow system pressure condition.

NJ.10.2 Automatic Isolation Controls

NJ.10.2.1 Construction Inspection

Prior to Acceptance Testing, verify and document the following:

- Valve and piping arrangements were installed per the design drawings to achieve equipment isolation requirements.
- Installed valve and hydronic connection pressure ratings meet specifications.
- Installed valve actuator torque characteristics meet specifications.

NJ.10.2.2 Equipment Testing

Step 1: Open all control valves. Verify and document the following:

- System operation achieves design conditions.

Step 2: Initiate shut-down sequence on individual pieces of equipment. Verify and document the following:

- The design control strategy meets isolation requirements automatically upon equipment shut-down.
- Ensure all valves operate correctly at shut-off system pressure conditions.

NJ.10.3 Supply Water Temperature Reset Controls

NJ.10.3.1 Construction Inspection

Prior to Acceptance Testing, verify and document the following:

- ALL SENSORS HAVE BEEN CALIBRATED.
- Sensor locations are adequate to achieve accurate measurements.
- Installed sensors comply with specifications.

NJ.10.3.2 Equipment Testing

Step 1: Manually change design control variable to maximum setpoint. Verify and document the following:

- Chilled or hot water temperature setpoint is reset to appropriate value.
- Actual supply temperature changes to meet setpoint.

Step 2: Manually change design control variable to minimum setpoint. Verify and document the following:

- Chilled or hot water temperature setpoint is reset to appropriate value.
- Actual supply temperature changes to meet setpoint.

NJ.10.4 Water-loop Heat Pump Controls

NJ.10.4.1 Construction Inspection

Prior to Acceptance Testing, verify and document the following:

- Valves were installed per the design drawings to achieve equipment isolation requirements.
- Installed valve and hydronic connection pressure ratings meet specifications.
- Installed valve actuator torque characteristics meet specifications.
- All sensor locations comply with design drawings.
- All sensors are calibrated.
- VFD minimum speed setpoint exceeds motor manufacturer's requirements.
- VFD minimum speed setpoint should not be set below the pumping energy curve inflection point (i.e. combination of pump-motor-VFD efficiency at reduced load may cause power requirements to increase upon further reduction in load).

NJ.10.4.2 Equipment Testing

Step 1: Open all control valves. Verify and document the following:

- System operation achieves design conditions +/- 5%.
- VFD operates at 100% speed at full flow conditions.

Step 2: Initiate shut-down sequence on each individual heat pumps. Verify and document the following:

- Isolation valves close automatically upon unit shut-down.
- Ensure all valves operate correctly at shut-off system pressure conditions.
- Witness proper response from VFD (speed decreases as valves close).
- System operation stabilizes within 5 minutes after test procedures are initiated (no hunting).

Step 3: Adjust system operation to achieve 50% flow. Verify and document the following:

- VFD input power less than 30% of design.

Step 4: Adjust system operation to achieve a flow rate that would result in the VFD operating below minimum speed setpoint. Verify and document the following:

- Ensure VFD maintains minimum speed setpoint regardless of system flow operating point.

NJ.10.5 Variable Frequency Drive Controls

NJ.10.5.1 Construction Inspection

Prior to Acceptance Testing, verify and document the following:

- All valves, sensors, and equipment were installed per the design drawings.
- All installed valves, sensors, and equipment meet specifications.
- All sensors are calibrated.
- VFD minimum speed setpoint exceeds motor manufacturer's requirements.
- VFD minimum speed setpoint should not be set below the pumping energy curve inflection point (i.e. combination of pump-motor-VFD efficiency characteristics at reduced load may cause input power to increase upon further reduction in load).

NJ.10.5.2 Equipment Testing

Step 1: Open all control valves. Verify and document the following:

- System operation achieves design conditions +/- 5%.
- VFD operates at 100% speed at full flow conditions.

Step 2: Modulate control valves closed. Verify and document the following:

- Ensure all valves operate correctly at system operating pressure conditions.
- Witness proper response from VFD (speed decreases as valves close).
- System operation stabilizes within 5 minutes after test procedures are initiated (no hunting).

Step 3: Adjust system operation to achieve 50% flow. Verify and document the following:

- VFD input power less than 30% of design.

Step 4: Adjust system operation to achieve a flow rate that would result in the VFD operating below minimum speed setpoint. Verify and document the following:

- Ensure VFD maintains minimum speed setpoint regardless of system flow operating point.