MANUAL

RESIDENTIAL MANUAL

FOR COMPLIANCE WITH THE 1998 ENERGY EFFICIENCY STANDARDS
(FOR LOW-RISE RESIDENTIAL BUILDINGS)

Gray Davis, *Governor*

JULY 1999

CALIFORNIA ENERGY COMMISSION

P400-98-002

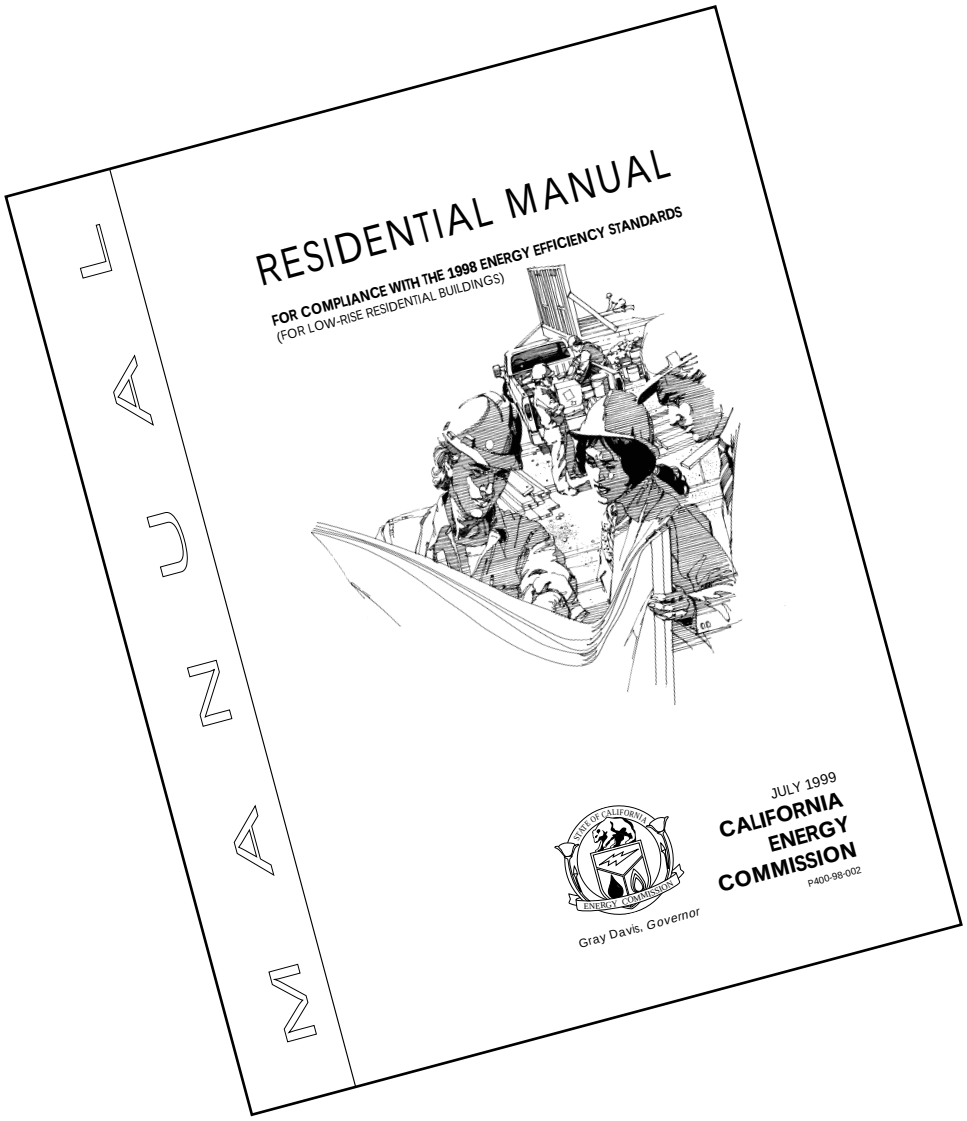

CALIFORNIA ENERGY COMMISSION

William J. Keese, *Chairman*
David A. Rohy, Ph.D., *Vice Chairman*

Commissioners:
Michal C. Moore
Robert A. Laurie
Robert Pernell

Valerie Hall, *Manager*

RESIDENTIAL BUILDINGS & APPLIANCES OFFICE

Scott Matthews, *Deputy Director*

ENERGY EFFICIENCY DIVISION

Acknowledgments

Efficiency Standards Committee

Commissioner Robert A. Laurie, Presiding Member

Commissioner Michal C. Moore, Associate Member

Principal Authors/Editors

Dee Anne Ross, Energy Commission

Bruce T. Maeda, Energy Commission

Jonathan Leber, Energy Commission

Bill Pennington, Energy Commission

Technical Assistance

The authors are grateful to many people and organizations that contributed to the development and production of this manual. The manual reflects, to a large extent, the comments made by the many people who took time to carefully review earlier versions. This assistance has been most helpful to us during the revision of the 1998 Residential Manual.

Lastly, so many others contributed helpful suggestions, comments and criticism that are impossible to show a complete list. However, their assistance is acknowledge and greatly appreciated.

In spite of all our efforts, omissions and errors are certain to occur; these, of course, are attributed to the authors alone. If a Manual user discovers an error or has a suggestion, we ask that it be brought to our attention of the Energy Efficiency Hotline and they can be reached at 1-800-772-3300 (California Only) or 916-654-5106.

Additional Reviewers/Contributors

Bill Mattinson, Sol*Data,
Ken Nittler, Enercomp, Inc.
Martyn Dodd, Gabel Dodd/EnergySoft LLC
Mike Gabel, Gabel Associates, LLC
Bob Fiock, County of Siskiyou

Energy Commission Staff:
Valerie Hall
Chris Fultz
Nelson Pena
Debbie Friese
Payam Bozorgchami
Joseph Estepa
Dean Samuelson
Tav Commins

Table of Contents

Part	Topic	Page
CHAPTER 1: INTRODUCTION		
1.0	Summary	1-1
1.1	Reasons for Energy Standards	1-1
1.2	Purpose and Organization of this Manual	1-3
1.3	Current Standards: All Occupancies	1-5
1.4	Residential Standards	1-9
1.5	Code Decisions: Case Studies	1-21
1.6	Where To Get Help	1-23
CHAPTER 2: MANDATORY MEASURES		
2.0	Summary	2-1
2.1	Introduction	2-1
2.2	Compliance	2-2
2.3	Building Envelope Mandatory Measures	2-2
2.4	Space Conditioning, Water Heating and Plumbing System Measures	2-26
2.5	Lighting	2-47
2.6	Sample forms	2-51
CHAPTER 3: PRESCRIPTIVE PACKAGES		
3.0	Summary	3-1
3.1	Introduction	3-1
3.2	Package Requirements	3-2
3.3	Prescriptive Compliance Documentation	3-24
3.4	Package Requirements for All Climate Zones	3-27
CHAPTER 4: COMPLIANCE THROUGH QUALITY CONSTRUCTION		
4.0	Summary	4-1
4.1	Duct Efficiency	4-2
4.2	Infiltration and Ventilation	4-5
4.3	Diagnostics/Field Verification	4-7
4.4	Procedures for HVAC System Design and Installation	4-13
CHAPTER 5: COMPUTER METHODS		
5.0	Summary	5-1
5.1	Introduction	5-1
5.2	Compliance with a Computer Method	5-3
5.3	General Compliance Procedures	5-4
5.4	Proposed Design Modeling	5-6

5.5 Computer Method Documentation 5-35
5.6 Standard Design Assumptions 5-36

CHAPTER 6: WATER HEATING

6.0 Summary 6-1
6.1 Introduction 6-1
6.2 Basic Approach 6-10
6.3 Instructions, Forms & Tables 6-12
6.4 Case Studies 6-27
6.5 Combined Hydronic Space and Water Heating 6-35
6.6 System Descriptions: Water 6-35

CHAPTER 7: ADDITIONS AND ALTERATIONS

7.0 Summary 7-1
7.1 Introduction 7-1
7.2 Compliance Analysis of an Addition Alone 7-5
7.3 Compliance Analysis Using the Existing-Plus-Addition Method 7-11
7.4 Space-conditioning Equipment for Additions 7-18
7.5 Alterations 7-19
7.6 Repairs 7-24

CHAPTER 8: SPECIAL COMPLIANCE TOPICS

8.0 Summary 8- 1
8.1 Multi-Family Buildings 8- 2
8.2 Mixed Occupancy Buildings 8- 4
8.3 Change in Occupancy 8- 4
8.4 Subdivisions & Master Plans 8- 5
8.5 Fenestration Products 8- 7
8.6 Wood Space Heating 8- 12
8.7 Controlled Ventilation Crawl Space (CVC) 8- 14
8.8 Zonal Control 8- 15
8.9 Hydronic/Combined Hydronic Space Heating 8- 18
8.10 Evaporative Cooling 8- 22
8.11 Geothermal (Ground Source) Heat Pumps 8- 23
8.12 Duct Credits 8- 23
8.13 Radiant Barriers 8- 26
8.14 Infiltration Reduction Credit–Air Retarders/Housewraps 8- 26
8.15 Log Homes 8- 27
8.16 Solar Energy Systems 8- 28
8.17 Straw Bale Construction 8- 30

APPENDICES:

APPENDIX A: Compliance Forms
APPENDIX B: Materials References
APPENDIX C: California Design Location Data
APPENDIX D: Climate Zone Descriptions
APPENDIX E: List of Publications
APPENDIX F: List of Approved Computer Programs
APPENDIX G: Glossary and Explanation of Key Terms
APPENDIX H: Construction Assemblies
APPENDIX I: Framing Calculations/Tables/Forms
APPENDIX J: Procedure for Determining the Seasonal Energy Efficiencies of Residential Air Distribution Systems
APPENDIX K: Procedures For HVAC System Design and Installation

Chapter 1: Introduction

1.0 SUMMARY

This chapter is an introduction to *the 1998 Energy Efficiency Standards* (standards) for low-rise residential buildings. The parts of this chapter discuss:

- The legal, historical, comfort, economic and environmental reasons for having energy standards
- Which set of standards applies to buildings based upon their occupancy type and number of stories
- Basic approaches for building compliance under the standards
- Case studies illustrating how the standards are applied in a variety of permit situations
- The organization of this ***Residential Manual*** (Manual)
- Where to obtain additional help beyond the information contained here

A sample of the Certificate of Compliance (CF-1R), the form that summarizes compliance, is included in Appendix A and explained in Part 1.4.

CHAPTER OVERVIEW:

Part	Topic	Page
1.1	**Reasons for Energy Standards**	**1-1**
	Legal Requirements	1-1
	Benefits of Energy Conservation	1-2
1.2	**Purpose and Organization of this Manual**	**1-3**
1.3	**Current Standards: All Occupancies**	**1-5**
	Changes for 1998 Residential Standards	1-5
	History of the Standards	1-6
	Which Standards Apply?	1-7
1.4	**Residential Standards**	**1-9**
	Mandatory Measures	1-9
	California Climate Zones	1-9
	Compliance With an Energy Budget	1-11
	How to Comply With the Standards	1-12
	Responsibility for Signing	1-15
	Field Verification and Diagnostic Testing	1-15
	Certificate of Compliance	1-15
	Installation and Insulation Certificates	1-16
	California Guide to Home Comfort and Energy Savings	1-18
	Compliance and Enforcement Phases of the Building Process and the Roles of the Building Community	1-21
1.5	**Code Decisions: Case Studies**	**1-21**
1.6	**Where To Get Help**	**1-23**
	Publications	1-24
	Appliance Certification	1-24
	Insulation Certification	1-24
	Training Opportunities	1-24

Applicable sections of California Code of Regulations Title 24, Part 1: 10-103.

1.1 REASONS FOR ENERGY STANDARDS

Legal Requirements

All new buildings in California must meet the standards contained in Title 24, Part 6 of the California Code of Regulations. All new construction must comply with the standards in effect on the date a building permit application is made (not issued).

Section 25402 of the Public Resources Code directs the California Energy Commission to:

> *"Prescribe, by regulation. . . building design and construction standards which increase the efficiency in the use of energy for new residential and new nonresidential buildings.*

"The standards shall be cost effective, when taken in their entirety, and when amortized over the economic life of the structure when compared with historical practice."

Section 25402 also states that:

The commission shall periodically update the standards and adopt any revision which, in its judgment, it deems necessary. Six months after the commission certifies an energy conservation manual . . . , no city, county, city and county, or state agency shall issue a permit for any building unless the building satisfies the standards prescribed by the commission . . .

Changes to the standards occur periodically to account for improvements in conservation technologies, changes in the cost of fuels and energy-conserving strategies, and improved capabilities in analyzing building energy performance. In addition, modifications are also made to further improve compliance and enforcement.

Benefits of Energy Conservation

Comfort

Compelling reasons exist for more efficient energy use in buildings. Comfort is an important reason. If a house is drafty, even a large, modern furnace will not keep it comfortable on a winter day. On a hot summer day no reasonable amount of air conditioning can maintain an appropriate sense of coolness in a room surrounded by clear glass windows without shading. The mechanical heating and cooling equipment are only part of the overall system that maintains a pleasantly comfortable indoor environment. The building shell (or envelope) is equally important and energy efficiency helps ensure that new homes maintain a reasonable level of comfort.

Economics

A second reason for energy efficiency is economics. For the homeowner, investing in building energy conservation helps to ensure that energy use in residences is affordable both now and into the future. Providers of financing recognize the impact of efficiency through energy efficient mortgages.

From a larger perspective, the less the state economy depends on depletable resources such as natural gas, coal and oil, the stronger and more stable it will remain in the face of increases in costs of those resources. Cost-effective investment in energy efficiency helps everyone.

Environment

A third benefit of energy efficiency is to the local environment. In many parts of the world, the need for more energy has led to oil spills, acid rain, smog and other forms of environmental pollution that have ruined the beauty people sought to enjoy. California is not immune to these problems, but they would be worse today without appliance standards, building standards and utility programs in effect since the late 1970s. The benefits of reducing environmental damage also include less destruction of natural habitats, which in turn helps protect animals, plants and the natural systems. By the year 2009, existing building standards will save more energy since their inception than seven enormous, multi-billion dollar coal plants could have produced—and without the air pollution accompanying those power plants.

Global Warming

Finally, the state faces a major uncertainty—global climate change or global warming. One of the contributors to global warming is a by-product from burning fossil fuel. Every time a fossil fuel is burned, no matter how cleanly, carbon dioxide is added to an atmosphere already containing 25 percent more than it did two centuries ago. Those extra gasses add an insulating layer to the earth that may lead to global climate change.

Most scientists agree that the effects of global warming will be significant. According to California Energy Commission (hereafter Energy Commission) research, most of the sectors of the state economy could face significant risk from climate change including water resources, agriculture, forests and the natural habitats of a number of indigenous plants and animals.

Many scientists recommend that actions be taken to reduce emissions of carbon dioxide and other greenhouse gasses. While adding *scrubbers* to power plants and catalytic converters to cars is a step in the right direction, those actions do not limit the carbon dioxide we emit into the atmosphere. Using energy efficiently is a far-reaching strategy that can make an important contribution to the reduction of greenhouse gasses. The National Academy of Sciences urged the whole country to follow California's lead on such efforts, saying that we should *make conservation and efficiency the chief element in energy policy*. Their first efficiency recommendation was simple: *Adopt nationwide energy efficient building codes*. Energy conservation will not only increase comfort levels and save homeowners money, it will also play a vital role in creating and maintaining a healthy environment.

1.2 PURPOSE AND ORGANIZATION OF THIS MANUAL

The purpose of this ***Manual*** is to explain clearly how to comply with and enforce the current standards for residential buildings. The Manual is written as both a reference source and an instructional guide, and it can be used by architects, builders, building owners, designers, energy consultants, enforcement agency personnel, engineers, mechanical contractors and others directly or indirectly involved in the compliance process.

An increased focus on building quality to improve comfort is scattered throughout the manual. Chapters 2 includes diagrams and guidelines for HVAC systems and ducts. Included in Chapter 2 are graphic representation of a well constructed duct using diagrams from Uniform Mechanical Code (UMC) and the Air Diffusion Council. Chapter 4 includes criteria for obtaining energy credit for ducts constructed more efficient than typical construction. Chapters 3 and 8 include diagrams and guidelines for building a better envelope, from Energy Efficiency Build America (a program sponsored by the federal Department of Energy).

The Manual is organized into chapters, each of which covers an important topic, or set of topics, regarding energy compliance and energy conservation in residential buildings. There are also several appendices including an extensive glossary.

Using the following icons, this Manual is organized, where appropriate, to:

Energy Code

(1) Present the relevant language (in italics) from the 1998 *Energy Efficiency Standards;*

(2) provide explanations or other direction to the:

Compliance/ Plan Check

(a) energy consultant and plan checker,

Construction

(b) the builder, and

Inspection

(c) the inspector

followed by:

Examples

(3) Examples and newsletter excerpts.

Scattered throughout are also:

Introduction

General information and concepts;

Useful Information

Information about how products or materials use and conserve energy; and

Quality Construction

Tools for improving the quality of construction to increase comfort and potentially reduce liability.

As a result of this new format, that should make it easier to use the manual as a reference, there is some duplication. For example, when information applies to both the builder and the inspector it will appear in both places.

Refer to Parts 1.3 and 1.4 to learn which steps to take and which information is relevant in a variety of compliance and enforcement situations.

Chapter 1, this ***Introduction***, serves as an overview of the standards. It explains how the standards apply to various building occupancies and highlights key aspects of compliance.

Chapter 2 discusses the ***Mandatory Measures*** called out in the standards relating to insulation levels, infiltration controls, HVAC and plumbing systems, lighting and appliance features.

Chapter 3 presents a detailed explanation of how to comply using the ***Prescriptive*** *(Alternative Component)* ***Packages***; a description of each package; an example of package compliance documentation; and a listing of the prescriptive package requirements for all 16 climate zones.

Chapter 4 details the compliance process using newly approved ***Quality Construction Options***, including high quality, efficient ducts and reduced building envelope infiltration. These compliance options are available through the performance (computer) compliance approach subject to installer certification and field verification and diagnostic testing by a certified HERS Rater.

Chapter 5 details the compliance process using approved ***Computer Methods***; outlines computer modeling guidelines and restricted inputs; and illustrates computer compliance documentation.

Chapter 6 covers ***Water Heating*** energy use, calculations and compliance documentation. It includes required water heating forms and worksheets.

Chapter 7 explains ***Additions and Alterations***, including compliance of additions with the prescriptive and the performance approaches.

Chapter 8 illustrates several ***Special Compliance Topics***: Multi-family buildings, mixed occupancy buildings, subdivision master plans, wood heat, log homes, solar energy systems, zonal control, hydronic space heating and radiant barriers.

The ***Appendices*** contain general reference tables, charts and lists relating to the implementation of the standards, including California Design Location Data and Climate Zone Descriptions. Appendix G, Glossary and Explanation of Key Terms, is an extensive source that explains compliance terminology applicable to all chapters.

The ***Index*** includes all applicable terms used in explaining residential building energy conservation, the low-rise Residential Standards and related compliance calculations.

1.3 CURRENT STANDARDS: ALL OCCUPANCIES

Changes for 1998 Residential Standards

Thermal Mass

Thermal mass is no longer required for compliance with prescriptive package D (Package E was eliminated because the only difference between the two was the thermal mass requirement). Homes designed for passive solar can use Package A or computer compliance to account for the benefits of a significant amount of thermal mass.

Water Heating

An R-12 water heater insulation blanket is mandatory for water heaters with an energy factor that is below 0.58. No compliance credit is given for water heater insulation. Compliance with the water heating budget is achieved with a non-recirculating, storage gas water heater, with a 0.53 energy factor.

Fenestration

All manufactured products must have a label with the U-value and Solar Heat Gain Coefficient (SHGC). All references to shading are now in terms of SHGC instead of Shading Coefficient (SC).

Only field-fabricated fenestration does not need to be labeled. The term field-fabricated replaces site-built, and refers to products where the frame is made from materials not previously cut or formed with the intention of being used for a fenestration product. Field fabricated does not include site assembled frame components that were manufactured elsewhere with the intention of being assembled on site (such as knocked down products, sunspace kits and curtainwalls).

Shading

In prescriptive compliance, shading must be provided by a fenestration product with the required SHGC (e.g., low-e^2), an exterior shading device or an overhang. Interior shading devices cannot be used to show compliance with prescriptive SHGC requirements.

SHGC (instead of SC) are fixed at 0.68 for draperies, 0.47 for blinds and 0.47 for roller shades until December 31, 2001. Beginning January 1, 2002, roller shades cannot be used for compliance. These are the only acceptable values for interior shading devices.

Ducts

All pressure-sensitive tapes, mastics, aerosol sealants or other closure systems must meet applicable UL 181A and B requirements

Drawbands Used with Flexible Duct shall:

- be either stainless-steel worm-drive hose clamps or uv-resistant nylon duct ties.
- have a minimum tensile strength rating of 150 pounds.
- be tightened as recommended by the manufacturer with an adjustable tensioning tool.

Credit for tight ducts, verified through diagnostic testing, is allowed with a computer compliance approach.

Lighting

The general lighting in kitchens must provide sufficient light for basic kitchen tasks and provide a uniform pattern of illumination. A light in a corner of the kitchen, whether efficient or not, will no longer meet the requirement.

The control for the general lighting in kitchens must be on a readily accessible switch at one of the entrances to the kitchen. This eliminates the need for determining what is the most accessible switch. Readily accessible means that it can be reached quickly without removing obstacles.

The bathroom lighting requirements were changed to require a high efficacy light source in each room with a shower or bathtub (no reference to water closet).

An alternative to the bathroom lighting is to install *both* of the following:

- A high efficacy lamp in a utility room, laundry room or garage; and
- All luminaires permanently mounted to the exterior of the residence for outdoor lighting must either have high efficacy lamps or be equipped with a motion sensor.

Raised Floor Insulation

R-8 insulation for concrete raised floor (e.g., apartments with underground parking) is no longer a mandatory requirement. Prescriptive Package D requires R-8 in climate zones 1, 2, 11, 13, 14 and 16, R-4 is required in zones 12 and 15, no concrete raised floor insulation is required in zones 3-10.

Space Conditioning

Prescriptive compliance with Package D can be achieved with any type of space heating, such as a wall furnace or space cooling system that complies with applicable appliance efficiency requirements. A setback thermostat is required.

Alterations

When space conditioning or water heating equipment is changed, it is limited to natural gas, liquefied petroleum gas or the existing fuel type. This prevents changeouts to less efficient fuel sources.

A new computer compliance provision for existing-plus-alteration allows trade-offs in alterations. This provision is primarily for an applicant who: (1) cannot or does not want to meet the 0.75 U-value for windows, or (2) wants to change from gas or LP to electric heating or water heating.

History of the Standards

The OPEC oil embargo of 1973 brought about an awareness of the need for an effective state energy conservation policy. The Legislature created the Energy Commission in 1974 to deal with energy-related problems, and it mandated that the Energy Commission adopt conservation standards for new buildings. The Energy Commission first adopted such standards in 1977.

The *First Generation* standards for nonresidential and residential buildings took effect in 1978. *First Generation* standards remained in effect for all nonresidential occupancies until January 1987, when a new set of *Second Generation* standards adopted in December of 1983 and January of 1984 became mandatory for office occupancies. *Second Generation* standards for retail and wholesale occupancies took effect in July 1988, when lighting requirements switched to the *Second Generation* format for all nonresidential occupancies.

Envelope and Heating, Ventilating and Air Conditioning (HVAC) compliance requirements for nonresidential occupancies, except office and retail/wholesale, remained the same from 1978 until the 1992 nonresidential standards took effect. However, permit applicants had the option of showing compliance on *First Generation* occupancies using a *Second Generation* compliance method from July 1988 until July 1992.

Second Generation Residential Standards took effect for single family dwellings in June 1983, and took effect for multi-family buildings in January 1984. Those standards included a Point System, and for the first time allowed the use of approved computer methods to demonstrate compliance. Additional legislation (AB 163) allowed the permit applicant to use a computer method to generate a *custom energy budget* based on the features prescribed in the Alternative Component Packages D (slab floor) or E (raised floor).

Revised *Second Generation* Residential Standards for low-rise residential occupancies took effect in July 1988. The Energy Commission provided a revised Point System with greater flexibility and accuracy. For computer compliance methods, the Energy Commission specified required capabilities including an automatic custom budget generator based on a standard design with the prescriptive features of Alternative Component Packages D or E. In addition, the computer methods were required to print out standardized forms.

High-rise residential and hotel/motel occupancies were covered under the 1978 *First Generation* Residential Standards until July 1992, when they come under the Nonresidential Standards. A relatively small set of revisions constituted the changes for the 1995 standards focusing on compliance and implementation issues rather than developing new standards. The 1998 revisions again focused on compliance and implementation issues.

Table 1-1 summarizes the Standards in effect since 1978, and lists the name of the compliance manual used in conjunction with that set of Standards.

Which Standards Apply?

The current standards (1998 Edition) generally apply to all *Uniform Building Code (UBC)* occupancies of Group A, B, E, F, H, M, R and S buildings that are *mechanically heated or mechanically cooled* resulting in *directly* or *indirectly conditioned space*. Nonresidential buildings that have space conditioning, but do not meet the criteria of a directly or indirectly conditioned building, must comply with the lighting requirements only. Group I or U occupancies are exempt from the standards. The exempt occupancies include buildings such as hospitals, prisons and residential garages.

Two different sets of standards apply to the UBC occupancies mentioned above, with each type pertaining to specific occupancy categories.

Nonresidential Standards

Current Nonresidential Standards have an effective date of July 1, 1999. These standards cover all nonresidential occupancies (Group A, B, E, F, H, M or S), as well as high-rise residential (Groups R-1 and R-2 with four or more habitable stories), and all hotel and motel occupancies. (The standards define a habitable story as one that contains space in which humans may live or work in reasonable comfort, and that has at least 50 percent of its volume above grade.) These buildings include:

- Offices
- Retail and wholesale stores
- Grocery stores
- Restaurants
- Assembly and conference areas
- Industrial work buildings
- Commercial or industrial storage
- Schools and churches
- Theaters
- Hotels and motels
- Apartment and multi-family buildings, and long-term care facilities (group R-2), with four or more habitable stories

Applicable compliance manual: *Nonresidential Manual for Compliance with the Energy Efficiency Standards*, P400-98-005 (July 1999).

Residential Standards

The 1998 Residential Standards have an effective date of July 1, 1999. These standards cover all low-rise residential occupancies including:

- All single family dwellings of any number of stories (Group R-3)
- All duplex (two-dwelling) buildings of any number of stories (Group R-3)
- All multi-family buildings with three or fewer habitable stories (Groups R-1 and R-2)
- Additions and alterations to all of the above buildings

NOTE:

All hotels and motels comply with the nonresidential standards.

Applicable compliance manual: This *Residential Manual for Compliance with the Energy Efficiency Standards*, P400-98-002 (July 1999).

Copies of the compliance manuals and other relevant publications may be obtained from the Energy Commission (see Part 1.6).

Table 1-1: History of the Standards

Effective Date	Set of Standards	Compliance Manual
March 1978	First Generation Residential included Hotels & High-rise)	*Energy Conservation Design Manual for New Residential Buildings* (2/78)
March 1978	First Generation Nonresidential	*Energy Conservation Manual for New Nonresidential Buildings* (10/77)
June 1983 (single-family), January 1984 (multi-family)	Second Generation Residential (excluded Hotels & High-rise)	*Energy Conservation Manual for New Residential Buildings* (Fall, 1984)
January 1987	Second Generation Nonresidential (Only Office)	*Energy Efficiency Manual, Designing for Compliance* (12/86)
July 1988	Second Generation Nonresidential (Office and Retail/Wholesale)	*Energy Efficiency Manual, Designing for Compliance* (9/88)
July 1988	Second Generation Residential (excluded Hotels & High-rise)	*Energy Conservation Manual for New Residential Buildings* (7/88)
July 1992	Nonresidential Standards (includes Hotels & High-rise Residential)	*Nonresidential Manual for Compliance with Energy Efficiency Standards* (7/92)
July 1992	Residential Standards (excludes Hotels & High-rise)	*Residential Manual for Compliance with Energy Efficiency Standards* (7/92)
July 1995	Nonresidential Standards (includes Hotels and High-rise Residential)	*Nonresidential Manual for Compliance with Energy Efficiency Standards* (7/95)
July 1995	Residential Standards (excludes Hotels & High-rise)	*Residential Manual for Compliance with Energy Efficiency Standards* (7/95)

NOTE: The *Uniform Building Code* defines a "guest room" as "any room or rooms used or intended to be used by a guest for sleeping purposes. *Every 100 square feet of superficial floor area in a dormitory shall be considered to be a guest room*" (italics added). Therefore, congregate residences, or any building with dormitory-style sleeping quarters, with six or more "guest rooms" is considered a hotel/motel for purposes of standards compliance (Section 101(b)). Hotels/motels, regardless of the number of stories, comply with the requirements found in the *Nonresidential Manual*.

When is a historical building exempt from the Energy Efficiency Standards (Title 24, Part 6)? Are additions to historical buildings also exempt?

A building is exempt from Part 6 when it is a "qualified historical building." This term is defined in Section 8-302 of Title 24, Part 8 as a "structure or collection of structures, and their associated sites, deemed of importance to the history, architecture, or culture of an area by an appropriate local, state or federal governmental jurisdiction. This shall include

designated structures on official existing or future national, state or local historical registers or official inventories, such as the National Register of Historic Places, State Historical Landmarks, State Points of Historical Interest, and officially adopted city or county registers or inventories of historical or architecturally significant sites, places or landmarks."

"Additions which are structurally separated" from the historical building are not exempt from the *Energy Efficiency Standards* and must comply with current building codes (*Historical Building Code*, Title 24, Part 8, Section 8-504).

Do the standards in Title 24, Part 6, apply to an addition to a mobile home?

No. Title 25 requirements, not Title 24, govern mobile homes, including additions to the unit. Jurisdiction in a mobile home park comes under the authority of Housing and Community Development. Jurisdiction of a mobile home on private property may come under the authority of the local building department.

Parts 1 and 6 of Title 24

References to Part 6 of Title 24 mean the Energy Efficiency Standards, also called the Energy Code. References to Part 1 of Title 24 mean the Administrative Regulations, of which Sections 10-101 through 10-112 pertain to Part 6. The Administrative Regulations contain information about the documentation requirements, procedural information and other administrative requirements.

1.4 RESIDENTIAL STANDARDS

To comply with the low-rise Residential Standards, a building must be shown to meet two basic requirements:

- Installation of several *mandatory measures* representing minimum conservation features and devices; and
- Demonstration that the building's predicted annual energy use meets the designated *energy budget* for space heating and cooling, and for water heating.

Mandatory Measures

Minimum ceiling, wall and raised floor insulation levels; minimum HVAC (heating, ventilating and air conditioning) and water heating equipment efficiencies, explained in Appendix G, the Glossary, are required features that apply to all low-rise residential buildings even if those features are not sufficient to show that a specific building meets the energy budget.

For example, R-13 insulation in wood frame walls is a mandatory measure. However, a building may be designed with R-19 walls in order to meet the energy budget. In that case, the R-19 supersedes the R-13 minimum requirement, and the R-19 must be installed for the building to comply. The same holds true for the other mandatory minimum insulation levels and equipment efficiencies (see Chapter 2, Part 2.1).

NOTE:

All low-rise residential buildings must have the mandatory measures installed. Compliance with the energy budget may not be required. Exceptions to the requirement of meeting the energy budget include:

(a) Seasonally occupied agricultural housing limited by state or federal agency contract to occupancy not more than 180 days in any calendar year.

(b) Low-rise residential buildings that use no energy obtained from a depletable source for either lighting or water heating and obtain heat from wood heating or other non-mechanical system.

California Climate Zones

Since energy use depends partly upon weather conditions which differ throughout the state, the Energy Commission has established 16 climate zones representing distinct climates within California (see Figure 1-1). These 16 climate zones are used with both the low-rise Residential and the Nonresidential Standards.

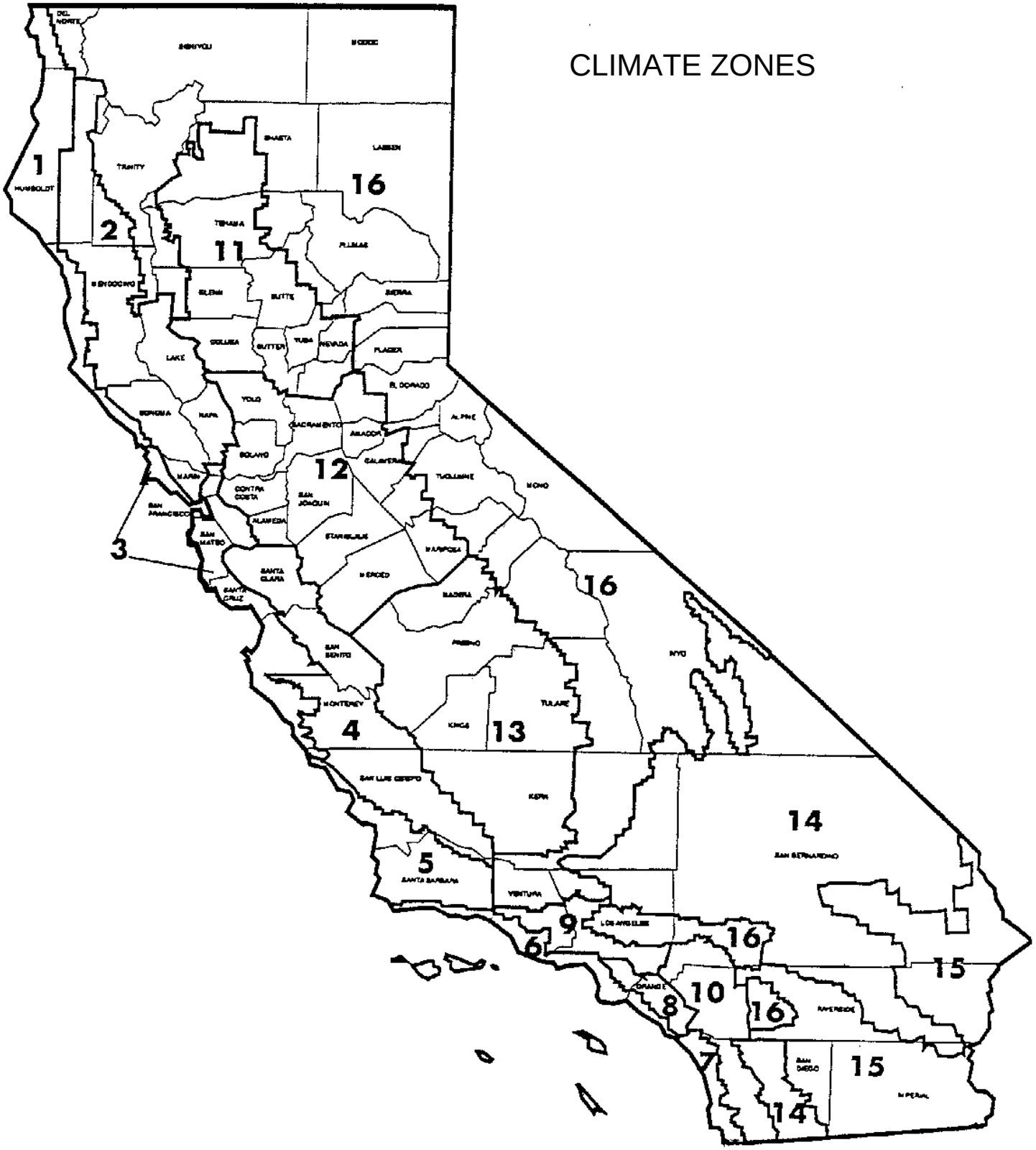

Figure 1-1: California Climate Zones

Detailed climate zone boundary descriptions and lists of locations within each zone are available in the Energy Commission publication *California Climate Zone Descriptions for New Buildings, July 1995*, (P400-95-041) an abridged version of which is contained in Appendix D.

NOTE:

Cities may occasionally straddle two climate zones. In these instances, the exact building location and correct climate zone should be verified before any calculations are performed.

If a single building development is split by a climate zone boundary line, it must be designed to the requirements of the climate zone in which 50 percent or more of the dwelling units are contained (see also Chapter 7).

Compliance With an Energy Budget

Two general options demonstrate that a residential building meets the energy budget defined in the standards:

- ***Prescriptive Packages*** *("Alternative Component Packages").* The simplest approach in which each individual component of the proposed building must meet a prescribed minimum energy requirement.

- ***Performance Methods*** *("Alternative Calculation Methods")*. Computer or hand-calculated performance methods provide the most flexibility and accuracy in calculating energy use. The most detailed accounting of energy *trade-offs* between measures is possible with the computer programs.

With any of these compliance paths, mandatory measures must be installed. Where superseded by a more stringent requirement to achieve compliance with the energy budget or prescriptive package, the more stringent feature becomes mandatory.

Prescriptive Packages

The standards provide a prescriptive approach to compliance using an *alternative component package* or *prescriptive package* of building conservation features. This approach is the least flexible yet simplest compliance path. It is simple because an applicant need only show that a building meets each minimum or maximum level prescribed in the set of requirements contained in a package; few calculations, if any, are needed to demonstrate compliance.

Four prescriptive packages are designated by the letters A, B, C or D for each climate zone. Buildings constructed according to any of the packages are deemed to meet the energy budget. There is no flexibility within any given package: *Every single feature* must be met in order for the building to comply. The only flexibility is in the selection of which package to choose, each package representing a different combination of building conservation features (see Chapter 3, Part 3.4).

Compliance documentation to be submitted with this approach:

- *CF-1R , Certificate of Compliance (required)*
- *MF-1R, Mandatory Measures Checklist (required)*
- *Form 3R, Construction Assembly U-Value (if applicable)*
- *Form 3RM, Masonry Wall Assembly (if applicable)*
- *Form CF-4R, Field Verification and Diagnostic Testing (if applicable)*
- *Form S, Solar Heat Gain Coefficient Worksheet (if applicable)*
- *Water Heating Calculations (if applicable)*

Two additional forms, the Installation Certificate (CF-6R) and the Insulation Certificate (IC-1) will be required to be provided during construction for the building inspection.

Refer to Chapter 3 for a full discussion of compliance with a prescriptive package. Refer to Chapter 7 for details on how the prescriptive approach is used with additions.

Performance Methods

Energy Commission-approved *alternative calculation methods* (ACMs) or *computer method*s represent the most detailed and sophisticated performance approach to compliance. While calculating or *modeling* the energy performance of a building may require the most effort, this method provides the greatest flexibility to demonstrate compliance.

In using an approved computer method, the *energy budget* for space conditioning is first automatically established by the computer program for the particular building being analyzed. This budget is derived by the program modeling the *standard design*, a version of the building which assumes all the prescriptive Package D conservation features.

The result is an energy budget for space conditioning expressed in kBtu per square foot per year. The program also calculates the budget for water heating energy use in kBtu per dwelling unit (see Chapter 6). The water heating budget is translated into a kBtu per square foot per year value and automatically added to the space conditioning budget to yield the *combined energy budget*. ***To comply with the standards, the predicted combined "Energy Use" of the Proposed Design cannot exceed the combined "Energy Budget" of the Standard Design.***

Compliance documentation to be submitted with this approach includes:

- *CF-1R , Certificate of Compliance (required)*
- *MF-1R, Mandatory Measures Checklist (required)*
- *C-2R, Computer Method Summary (required)*
- *Form 3R, Construction Assembly U-Value (if applicable)*

The Installation Certificate (CF-6R) and Insulation Certificate (IC-1) are required during construction.

Refer to Chapter 5 for a detailed explanation of compliance using approved computer methods.

If features are used for compliance that require field verification and diagnostic testing a CF-4R, as detailed in Chapter 4, will also be required at the completion of construction.

How to Comply With the Standards

Energy Code

Documentation (Section 10-103(a)(2))

(B) Plans and specifications submitted with each application for a building permit shall show the characteristics of each feature, material, component, and manufactured device proposed to be installed in order to have the building meet the requirements of Part 6, and of any other feature, material, component, or manufactured device that Part 6 requires be indicated on the plans and specifications. If any characteristic is materially changed before final construction and installation, such that the building may no longer comply with Part 6, the building must be brought back into compliance, and so indicated on amended plans, specifications, and Certificate(s) of Compliance and shall be submitted to the enforcement agency. Such characteristics shall include the efficiency (or other characteristic regulated by Part 6) of each device.

(C) All documentation necessary to demonstrate compliance for the building, and of the sections of Part 6 with which the building is intended to comply shall be submitted with each application for a building permit. The forms used to demonstrate compliance shall be readily legible and of substantially similar format and informational order and content to the appropriate forms in the Residential or Nonresidential Manual, as defined in Part 6.

Compliance/
Plan Check

How to Comply with the Standards

Title 24, Part 6 contains the Energy Efficiency Standards that must be complied with, Part 1 contains administrative, documentation, and procedural requirements for complying with the standards.

To comply with the Residential Standards, the permit applicant follows these general steps:

- Verify that the low-rise Residential Standards apply and that the correct climate zone is used for the building location.

- Demonstrate that the building meets the standards with one of the two compliance options: prescriptive packages or approved performance method.

- Include all appropriate mandatory features and provisions applicable to the building design.

- Document and coordinate all calculations, plans and specifications. This includes completing a *Certificate of Compliance (CF-1R)* which must appear on the drawings. See below for additional information on the CF-1R. (Blank forms are in Appendix A.)

- Install all specified measures in the building. The person responsible for construction or the installer of equipment must either post the installation certificate (Form CF-6R) or keep it with the plans and make it available to the inspector. This form, or several forms that together contain all the required information, must identify and provide the relevant energy efficiency data for each HVAC system, water heater system, fenestration product, faucet and showerhead, and any other manufactured device regulated by the standards.

  In addition, an Insulation Certificate (IC-1) must also either be posted by the insulation installer in a conspicuous location or kept with the plans and made available to the inspector. See below for additional information about the CF-6R and IC-1 forms. (Blank forms are in Appendix A).

- With a new dwelling unit: Deliver a *California Guide to Home Comfort and Energy Savings* or an equivalent document (see below) to the building owner at the time of occupancy along with copies of the CF-1R, MF-1R, CF-6R and IC-1. See below for additional information about the *California Guide to Home Comfort and Energy Savings* (formerly the Home Energy Manual).

The enforcement agency may require the person with overall responsibility for the construction to provide any other reasonable information to determine that the building as constructed is consistent with approved plans and specifications and complies with Part 6. (See Figure 1-2)

Examples

How to Comply with the Standards

What is a CF-6R and why is it required?

The CF-6R is an installation certificate for manufactured devices regulated by the appliance standards (see Part 6 of Title 24, Section 111) and a certification of installer tests for duct efficiency and reduced envelope leakage credits. The certification must include a statement indicating that installed devices conform to appliance and building standards and to any additional requirements contained in the plans and specifications. The certificate must be signed by the person with overall responsibility for construction or the person(s) responsible for installing the certified devices and/or appliances. This certificate must either be posted adjacent to the building permit or made available to the inspector during construction.

Information required on the CF-6R such as manufacturer, model number and efficiency helps to ensure that installed devices conform to specifications on the CF-1R and meet or

exceed minimum efficiency requirements. It also serves to advise the home owner what devices were installed in their home.

Responsibility for Signing

Energy Code

Certificate of Compliance
Section 10-103(a)(1)

The Certificate(s) of Compliance described in Section 10-103 shall be signed by the person(s) responsible for the building design to certify conformance with Part 6. The signer(s) shall be eligible under Division 3 of the Business and Professions Code to sign such documents. If more than one person has responsibility for building design, each person may sign the document or documents applicable to that portion of the design for which the person is responsible. Alternatively, the person with chief responsibility for design may prepare and sign the document for the entire design.

Subject to the preceding paragraph, persons who prepare energy compliance documentation shall sign a statement that the documentation is accurate and complete.

Compliance/
Plan Check

Signatures on Certificates

Certificate of Compliance

The signature on the Certificate of Compliance of the "Designer" is the person who takes responsibility for the building design being in compliance with the standards. This person must have the authority given by the *Business and Professions Code* for the type of construction.

NOTE:

The documentation author is not subject to the limitations and restrictions of the *Business and Professions Code*. The documentation author's signature is to verify that the documentation is accurate and complete.

Section 5537(a) and 6737.1 of the *Business and Professions Code* specifically exclude the following building types from requiring a licensed architect and engineer to design the building:

"5537 [and 6737.1]. (a) This chapter does not prohibit any person from preparing plans, drawings, or specifications for any of the following:

"(1) Single-family dwellings of woodframe construction not more than two stories and basement in height.

"(2) Multiple dwellings containing no more than four dwelling units of woodframe construction not more than two stories and basement in height. However, this paragraph shall not be construed as allowing an unlicensed person to design multiple clusters of up to four dwelling units each to form apartment or condominium complexes where the total exceeds four units on any lawfully divided lot.

"(3) Garages or other structures appurtenant to buildings described under subdivision (a), of woodframe construction not more than two stories and basement in height.

"(4) Agricultural and ranch buildings of woodframe construction, unless the building official having jurisdiction deems that an undue risk to the public health, safety, or welfare is involved.

"(b) If any portion of any structure exempted by this section deviates from substantial compliance with conventional framing requirements for woodframe construction found in the most recent edition of Title 24 of the California Code of Regulations or tables of limitation for woodframe construction, as defined by the applicable building code duly adopted by the local jurisdiction or the state, the building official having jurisdiction shall require the preparation of plans, drawings, specifications, or calculations for that portion by, or under the responsible control of, a licensed architect or registered engineer. The documents for that portion shall bear the stamp and signature of the licensee who is responsible for their preparation. Substantial compliance

for purposes of this section is not intended to restrict the ability of the building officials to approve plans pursuant to existing law and is only intended to clarify the intent of Chapter 405 of the Statutes of 1985."

If the building type requires that a licensed individual take responsibility for design under the *Business and Professions Code*, then that individual signs as designer and lists his or her license number above the signature. When the building type does not require the signature of a licensed individual, another individual may take responsibility as designer.

When the CF-1R is submitted for a single building plan to be built in multiple orientations (see Chapter 7, Part 7.4), the signature requirements may be met in one of two ways at the option of the document author:

- Indicate *all* shading variations on *one* signed CF-1R form which must appear on the plans. Include all CF-1R and C-2R forms with the calculation submittal; *or*,

- A signed CF-1R form for *each* shading variation must appear on the plans. Include C-2R forms with the calculation submittal.

The person who signs as the designer certifies that he or she has either:

- Directly prepared and coordinated the compliance documents; *or*

- Delegated responsibility to an energy documentation author who has provided the compliance analysis and documentation under their direction.

The documentation author also signs the CF-1R to indicate their responsibility for the accuracy and completeness of the compliance documentation.

Field Verification and Diagnostic Testing Certificate

HERS Provider/Rater

When compliance documentation indicates field verification and diagnostic testing of specific energy efficiency improvements as a condition for those improvements to qualify for Title 24 compliance credit, an approved HERS provider and certified rater must be used to conduct the field verification and diagnostic testing.

The HERS rater providing the diagnostic testing and verification shall sign and date a *Certificate of Field Verification and Diagnostic Testing* (CF-4R) certifying that they have verified that the requirements for compliance credit have been met. The HERS rater shall provide this certificate to the builder and the HERS provider. Raters shall provide a separate *Certificate of Field Verification and Diagnostic Testing* for each house the rater determines has met the diagnostic requirements for compliance. The HERS rater shall not sign a *Certificate of Field Verification and Diagnostic Testing* for a house that does not have a CF-6R signed by the installer.

Installation and Insulation Certificates

The standards require that the CF-6R be signed by the installer of each device (heating, cooling, water heating/plumbing equipment, heating and cooling distribution systems, air infiltration reduction systems, and fenestration products) or alternatively, the person with chief responsibility for construction.

The insulation installer must sign the IC-1.

Persons signing these forms are verifying that the installed efficiencies meet or exceed those used for compliance with the standards as shown on the CF-1R.

Certificate of Compliance

Energy Code

Certificate of Compliance
(Section 10-103(a)(2))

(A) For all new buildings designated to allow a conditioned use of an occupancy group or type regulated by Part 6 the applicant shall file the appropriate Certificate(s) of Compliance on the plans. The

Certificate(s) shall indicate the features and performance specifications needed to comply with Part 6, and shall be approved by the local enforcement agency by stamp or authorized signature. The Certificate(s) of Compliance and supporting documentation shall be readily legible and of substantially similar format and informational order and content to the appropriate Certificate(s) of Compliance and supporting documentation in the appropriate Residential or Nonresidential Manual, as defined in Part 6.

Compliance/
Plan Check

Certificate of Compliance (CF-1R)

All building permit applicants *shall file a certificate of compliance* ***on the plans*** as required by Title 24, Part 1, Section 10-103(a)2A of the Code of Regulations.

The items listed in the CF-1R form represent a set of minimum energy performance specifications, including the results of the heating load calculation. While a performance method analysis may be used to show compliance on a particular combination of conservation measures, the building must be constructed to meet or exceed the performance level established by all of the features and specifications contained in the CF-1R.

The requirement that the certificate be *on the plans* may be met by placing a transparency of the CF-1R on the drawings, taping a CF-1R to the drawings or printing the CF-1R information directly on the drawings. Verify with the local enforcement agency which is acceptable.

A blank copy of the recommended CF-1R form is contained in Appendix A. The same information is submitted regardless of which compliance approach is used. Completed examples of the CF-1R form are contained in the compliance documentation parts of Chapters 3 and 4.

Mandatory Measures Checklist: Residential

Compliance/
Plan Check

Mandatory Measures Checklist (MF-1R)

The Mandatory Measures Checklist for Residential Buildings is provided as a convenient summary of the mandatory measures required for low-rise residential buildings.

The items listed on the MF-1R form represent must be installed at or above the efficiency levels specified. In some cases, a specific compliance approach have requirements that supercede and go beyond the mandatory measure requirement. For example, Package D requires R-30 ceiling insulation which is more than the mandatory measure minimum of R-19. While the performance approach allows the standards to be met with more flexibility, the mandatory measures must always be met or exceeded regardless of the compliance approach.

Installation and Insulation Certificates

Energy Code

Installation and Insulation Certificates (Section 10-103(a) (3) and (4))

(3) Installation Certificate.

(A) The person with overall responsibility for construction or the person or persons responsible for the installation of regulated manufactured devices shall post, or make available with the building permit(s) issued for the building, the installation certificate(s) for manufactured devices regulated by the appliance standards or Part 6. Such installation certificate(s) shall be made available to the enforcement agency for all appropriate inspections.

These certificates shall:

1. *Identify features required to verify compliance with the appliance standards and Part 6.*

2. *Include a statement indicating that the installed devices conform to the appliance standards and Part 6 and the requirements for such devices given in the plans and specifications approved by the local enforcement agency.*

3. *State the number of the building permit under which the construction or installation was performed.*

4. *Be signed by the individual eligible under Division 3 of the Business and Professions Code to accept responsibility for construction, or their authorized representative. If more than one person has responsibility for building construction, each person may prepare and sign the part of the document applicable to the portion of construction for which they are responsible; alternatively, the person with chief responsibility for construction may prepare and sign the document for the entire construction).*

(B) The enforcement agency may require the person with overall responsibility for the construction to provide any other reasonable information to determine that the building as nconstructed is consistent with approved plans and specifications and complies with Part 6.

(C) If construction on any portion of the building subject to Part 6 will be impossible to inspect because of subsequent construction, the enforcement agency may require the installation certificate(s) to be posted upon completion of that portion.

(4) Insulation Certificate.

After installing wall, ceiling, or floor insulation, the installer shall make available to the enforcement agency or post in a conspicuous location in the building a certificate signed by the installer stating that the installation is consistent with the plans and specifications described in Section 10-103(a)2.A and for which the building permit was issued and conforms with the requirements of Part 6. The certificate shall also state the manufacturer's name and material identification, the installed R-value, and (in applications of loose fill insulation) the minimum installed weight per square foot consistent with the manufacturer's labeled installed design density for the desired R-value.

Construction

Installation and Insulation Certificates (CF-6R and IC-1)

The Installation Certificate (CF-6R) and Insulation Certificate (IC-1) are required to be posted at the job site or made available with the building permit during the construction phase of the project. The CF-6R is used to document all equipment and fenestration products installed in the building and installer test results for duct efficiency and reduced infiltration measures. The installer is responsible for verifying and complying with the efficiencies used to achieve compliance, as indicated on the CF-1R. These efficiencies (such as AFUE or HSPF for heating equipment, SEER for cooling equipment, energy factor for water heating, and U-value for fenestration products) must meet or exceed each value shown on the CF-1R. This means that the AFUE, HSPF, SEER or EF must be greater than or equal to the CF-1R value and the U-value and SHGC must be equal to or less than the CF-1R value.

NOTE: In a cold climate where heating loads significantly dominate cooling loads, a lower SHGC may be worse for the overall energy efficient operation of the home.

The IC-1 must be posted at the job site in a conspicuous location (e.g., in the garage) or

kept with the building permit and made available to the enforcement agency. The IC-1 must document the actual value of the installed insulation.

Both forms must be provided to the building owner at occupancy.

Examples

Installation and Insulation Certificates (CF-6R and IC-1)

What are the plan checking/field inspection requirements related to the CF-6R?

The CF-6R (Installation Certificate) is not required to be submitted with other compliance documentation at the time of permit application, but rather is posted or made available for field inspection. A field inspector will want to check the equipment installed against what is listed on the CF-6R *and* compare the CF-6R and CF-1R for consistent equipment characteristics.

For a performance approach that relies on duct efficiency improvements or reduced envelope leakage, the field inspector should check the *Special Features and Modeling Assumptions* and *HERS Required Verification* listings on the CF-1R for required installer tests for reduced duct leakage or building pressurization and verify that these tests were performed and documented on the Installation Certificate CF-6R.

California Code of Regulations Section 10-103(a)(3)(B) allows the enforcement agency to request additional information to determine that the building is constructed consistent with approved plans and specifications. When equipment efficiencies above the minimum requirements are shown on the CF-1R (e.g., 12 SEER cooling equipment; 0.63 energy factor water heater), the building department should have procedures in place to verify efficiency. Requiring proof of efficiency from the installer, such as a copy of the appropriate page from a directory of certified equipment, is one possibility. Another possibility is to require that the applicant send a duplicate of the CF-6R through plan check for verification.

What happens to the CF-6R after the final inspection?

California Code of Regulations Section 10-103(b) requires that the builder provide to the "building owner, manager, and the *original occupants* the appropriate Certificate(s) of Compliance and a list of the features, materials, components, and mechanical devices installed in the building, and instructions on how to use them efficiently" (italics added). At a minimum, the information on the CF-6R and CF-1R must be provided to the original building occupants as well as operating and maintenance information such as is contained in the *California Guide to Home Comfort and Energy Savings* (see below).

California Guide to Home Comfort and Energy Savings

Energy Code

Operating and Maintenance Information (Section 10-103(b)

Operating and Maintenance Information to be Provided by Builder.

(1) Operating Information. The builder shall provide the building owner at occupancy the appropriate Certificate(s) of Compliance and a list of the features, materials, components, and mechanical devices installed in the building and instructions on how to operate them efficiently. The instructions shall be consistent with specifications set forth by the Executive Director.

For residential buildings, such information shall, at a minimum, include information indicated on forms Certificate of Compliance (CF-1R), Mandatory Measures (MF-1R), Installation Certificate (CF-6R), Insulation Certificate (IC-1), and a manual which provides all information specified in this Section 10-103(b). The California Guide to Home Comfort and Energy Savings (P400-99-031) may be used to

meet the requirement for providing this manual.

For dwelling units, buildings or tenant spaces which are not individually owned and operated, or are centrally operated, such information shall be provided to the person(s) responsible for operating the feature, material, component or mechanical device installed in the building.

(2) *Maintenance Information. The builder shall provide to the building owner at occupancy maintenance information for all features, materials, components, and manufactured devices that require routine maintenance for efficient operation. Required routine maintenance actions shall be clearly stated and incorporated on a readily accessible label. The label may be limited to identifying, by title and/or publication number, the operation and maintenance manual for that particular model and type of feature, material, component, or manufactured device.*

For dwelling units, buildings or tenant spaces which are not individually owned and operated, or are centrally operated, such information shall be provided to the person(s) responsible for maintaining the feature, material, component, or mechanical device installed in the building.

Construction

California Guide to Home Comfort and Energy Savings and Forms to First Occupant

The owner of the residence when it is first occupied must receive a *California Guide to Home Comfort and Energy Savings (or =)* and the following compliance forms (signed copies, where applicable) for their building:

- CF-1R
- MF-1R
- CF-6R
- IC-1

The Energy Commission has prepared a *California Guide to Home Comfort and Energy Savings* that provides information to the homeowner regarding energy saving features and energy efficient operation and maintenance of their home. This guide is the type of guide that must be provided to fulfill the requirements of the standards. The Energy Commission's California Guide to Home Comfort and Energy Savings may be used to meet these requirements or can be used as a sample for developing one.

- The *California Guide to Home Comfort and Energy Savings* (formerly the Home Energy Manual) is available from the Energy Commission's publication unit, as publication number P400-99-031.

In multi-family buildings or where central systems provide space conditioning or water heating, the information is provided to whoever is responsible for operating and maintaining the building or equipment.

Examples

California Guide to Home Comfort and Energy Savings and Forms to First Occupant

As a general contractor, when I have finished building a residence, is there a list of materials I am supposed to give to the building owner?

The "owner at occupancy" must receive a copy of the following completed forms for that dwelling unit:

- Certificate of Compliance (CF-1R)
- Mandatory Measures Checklist (MF-1R)
- Installation Certificate (CF-6R)
- Insulation Certificate (IC-1)

In addition, they must receive either:

- A manual which contains instructions for operating and maintaining the features of their building efficiently, or

- The *California Guide to Home Comfort and Energy Savings* published by the Energy Commission.

(*Administrative Regulations*, Section 10-103(b)(1)-(2)).

I build some multi-family buildings and have some questions about the information I must provide (as required by Administrative Regulations, Section 10-103). Specifically:

(1) If the building is a condominium, can I photocopy the same information for all units?

Photocopied information is acceptable. It must be obvious that the documentation applies to that dwelling unit—that is, the features installed must match the features shown on the Installation Certificate. If compliance documentation is for a "building," a photocopy of the compliance forms for that building must be provided. If individual compliance is shown for each unique dwelling unit, a photocopy of the documentation which applies to that dwelling unit must be provided.

(2) When the building is an apartment complex (not individually owned units), who gets the documentation?

The documentation and operating information is provided to whomever is responsible for *operating* the feature, equipment or device (typically the occupant). Maintenance information is provided to whomever is responsible for *maintaining* the feature, equipment or device. This is either the owner or a building manager. (Section 10-103(b)(1)-(2).)

(3) If an apartment is converted to condominiums, does each owner/ occupant receive copies of the documentation?

If, during construction, the building changes from an apartment to condominiums, each owner at occupancy would receive the documentation. If an existing apartment building changes to condominiums at a later date, the documentation requirements are triggered only by a building permit application requiring compliance with the *Energy Efficiency Standards*. (Changing occupancy does not trigger compliance with the standards.)

What is my responsibility with respect to the CF-6R (Installation Certificate) (a) as an inspector? and (b) as a builder?

The building inspector is responsible for checking the CF-6R at appropriate inspections to be sure it is filled out and signed for the completed work. Inspectors can verify that the installed features are "consistent with approved plans," as indicated on the Certificate of Compliance (CF-1R) form. Since the CF-6R may be posted at the job site or kept with the building permit, the inspector can request that this form be made available for each appropriate inspection. It is not advisable to wait until the final inspection to check the CF-6R. (Section 10-103(d)(2).)

The general contractor, or his/her agent (such as the installing contractor), takes responsibility for completing and signing the form for the work performed. (A homeowner acting as the general contractor for a project may sign the CF-6R.) The compliance statement for their signature indicates that the equipment or feature: is what was installed; is equivalent or more efficient than required by the approved plans (as indicated on the CF-1R); and meets any certification or performance requirements. (Section 10-103(a)(3)(A).)

Compliance and Enforcement Phases of the Building Process and the Roles of the Building Community

The goals set by any building standard are no better than the level of cooperation and communication among the parties involved in the building process. These parties may include some or all of the following: architect or designer, builder/developer, purchasing agent, general contractor, subcontractor/installer, energy consultant, plan checker, inspector, realtor and owner/first occupant. To help resolve potential energy compliance issues, the standards specify detailed reporting requirements that are intended to provide design, construction, and enforcement parties with needed information to complete the building process and insure the energy features are installed. The above parties are accountable for insuring the building's energy features are installed in their phase of responsibility.

Design

This phase generally sets the stage for the type and style of building to be constructed. In addition to issues concerning zoning, lot orientation and infrastructure layout, the building's overall design and energy features are conveyed to working drawings of the building for construction. Parties associated with this phase must insure the energy features meet compliance with the standards and that these features are detailed on the construction plans.

Plan Check

Local building departments check plans for conformance to building standards. This includes health and safety requirements, such as fire and structural, along with energy requirements. Vague and/or missing details on the construction plans must be changed or clarified by parties involved in the design phase of the building process.

Construction

Upon receiving a building permit from the local building department, parties associated with this phase construct the building according to the approved construction plans. It is not unusual for changes to be made "in the field". Field changes which may result in non-compliance require building department approval of revised plans and energy compliance documentation demonstrating that the building is still in compliance.

Site Inspection

Local building departments, or their representatives, inspect all new buildings to insure conformance to building standards. Field construction changes and non complying energy features require parties associated with previous phases to repeat and revise their original efforts.

Occupancy

The standards require that the building owner at occupancy receive information indicated on forms:

- Certificate of Compliance (CF-1R)
- Mandatory Measures Checklist (MF-1R)
- Installation Certificate (CF-1R)
- Insulation Certificate (IC-1)

They must also receive either:

- A manual which contains instructions for operating and maintaining the features of their building efficiently, or
- The *California Guide to Home Comfort and Energy Savings* (P400-99-031).

For individually owned units in a multi-family building the documentation is provided to the owner of the dwelling unit or to the individual(s) responsible for operating the feature, equipment or device. The maintenance information is provided to whomever is responsible for maintaining the feature, equipment or device. Information must be for the appropriate dwelling unit or building (photocopies are acceptable).

1.5 CODE DECISIONS: CASE STUDIES

The first step in any project is to establish which standards apply and which compliance requirements must be met. Once that is done, compliance options can be considered and appropriate documentation prepared (or, in

the case of enforcement, forms reviewed and data verified).

Be sure that basic code decisions are correct; otherwise a considerable waste of effort may be expended attempting to meet the standards using an incorrect compliance approach. If in doubt, verify fundamental assumptions about the applicability of the standards for a specific project with the local enforcement agency before performing calculations to demonstrate compliance. The Energy Commission Energy Hotline is also available for assistance as explained in Part 1.6.

The following examples present several residential building scenarios and explain each in the context of which standards, if any, apply.

Example 1-1: Sunspace Addition

A sunspace addition is designed with no mechanical heating or cooling and a glass sliding door separating it from all existing conditioned space. The standards do not apply if the space is *unconditioned* (see Appendix G Glossary). This is the case if:

- The new space is not provided with heating or cooling (or supply ducts);
- The new space can be closed off from the existing house with weather-stripped doors; and,
- The addition is not *indirectly conditioned space* (see Appendix G Glossary).

Example 1-2: High-rise Mixed Occupancy

Three stories of residential dwelling units are planned over a first story that includes retail and restaurant occupancies. The residential apartments must comply with the Nonresidential (High-rise Residential) Standards since the structure contains four habitable stories and, as a whole structure, is a high-rise building. See Mixed Occupancy Buildings in Chapter 8, Part 8.2 to determine whether all four stories can be treated as the dominant occupancy.

Example 1-3: Four-Story Single Family Dwelling

A four-story single family townhouse is built. As a group R-3 occupancy, the Residential Standards apply. The building is not an apartment house (which, according to the UBC, must be at least three dwelling units).

Example 1-4: One Dwelling in Mixed Occupancy

A 1200 ft^2 manager's residence is being constructed as part of a new conditioned warehouse building with 14,000 ft^2. The whole building can comply with the Nonresidential Standards, and the residential unit is not required to comply separately since it is a subordinate occupancy containing less than 10 percent of the total conditioned floor area (see Chapter 8, Part 8.2). However, the residential dwelling unit must meet all low-rise residential mandatory measures (see Chapter 2).

Example 1-5: One Dwelling Addition

Assume the same scenario as in Example 1-4, except that the dwelling unit is new and the remainder of the building is existing. Since 100 percent of the addition being permitted is a low-rise residential occupancy, compliance under the Residential Standards is required (see Chapter 7).

Example 1-6: Alteration

An existing duplex is remodeled without increasing the amount of conditioned space. Even though no new conditioned space is being created, the remodel must comply with applicable mandatory measures, as explained in Chapter 7, Part 7.5 (also see Chapter 2).

Example 1-7: Alteration

An existing house is remodeled without increasing conditioned space. New windows are replacing old ones, and a new window is being added. Several exterior walls are being opened up in order to install new wiring. The house must meet the compliance requirements explained in Chapter 7, Part 7.5 (see *Example 7-3*) (new window 0.75 maximum U-value), as well as the mandatory measures applicable to the windows and wall insulation described in Chapter 2.

Example 1-8: Small Addition

A 95 ft^2 family room is being added to an existing 2800 ft^2 house. The addition alone must comply with the Residential Standards (see Chapter 6, Part 6.2) or the existing-plus-addition must comply as explained in Chapter 7, Part 7.3. If the prescriptive compliance approach is used for the addition alone, special prescriptive requirements apply (see Chapter 7, Table 7-1).

Example 1-9: Relocated Building

A residence is being moved to a different location. Since this is existing conditioned space, the requirements applicable to alterations would apply to any alterations being made (Chapter 7, Part 7.5). The building does not need to show compliance with the current energy standards applicable to new buildings or additions.

Example 1-10: Change of Occupancy

A previously conditioned retail space is remodeled to become a residential dwelling. The residential dwelling is treated as if it were previously a residential occupancy. In this case, the rules that apply to residential alterations (Chapter 7, Part 7.5) are applied.

Example 1-11: Mixed Occupancy

A 10,000 ft^2, 16 unit motel is constructed with an attached 950 ft^2 manager's residence. The manager's unit is less than 10 percent of the total floor area, so compliance of the whole building as the *predominant* motel occupancy satisfies the requirements of the standards (see Chapter 8, Part 8.2). The entire building may comply with the Nonresidential (High-Rise Residential and Hotel/Motel) Standards; or the manager's residence must comply with the low-rise Residential Standards *and* the motel occupancy portion of the building must comply with the Nonresidential Standards.

Example 1-12: Multiple Orientations

A subdivision of detached homes includes several unit types, each of which may be constructed in any orientation. The low-rise Residential Standards are applied to each building type. All four cardinal orientations may be shown to comply or each individual unit in its planned orientation must comply (see Chapter 8, Part 8.4).

Example 1-13: Apartment Building

A four-story apartment building has three stories of apartments and a garage on the first floor. For standards compliance, the low-rise Residential Standards apply since the building has fewer than four *habitable* stories. NOTE: The UBC considers this a four-story building. As a high-rise building for compliance with other building codes, different health and safety regulations apply.

1.6 WHERE TO GET HELP

If the information contained in the standards or this manual is not sufficient to answer a specific question concerning compliance or enforcement technical assistance is available from the Energy Commission's Energy Hotline, weekdays from 8 a.m. - noon and 1 p.m. - 4 p.m.:

(800) 772-3300
(916) 654-5106

Publications

Publications may be ordered from:

Publications Unit
California Energy Commission
1516 Ninth Street, MS-13
Sacramento, CA 95814
(916) 654-5200 (no phone orders)

Appendix F contains a list of available publications.

Forms and pages of publications can be faxed by an automated system at any time. This system is available by calling (916) 653-6830. You must enter a document number (a list of documents and document numbers is available on the system) and your fax number.
Some publications are accessible on the Energy Commission's Web Site www.energy.ca.gov/efficiency.

Appliance Certification Information

The Gas Appliance Manufacturers Association (GAMA) *Consumers' Directory of Certified Efficiency Ratings for Residential Heating and Water Heating Equipment* directory can be used to verify certification on *some* residential appliances. The GAMA directory (Sections I and II) can be used for gas furnaces, boilers and water heaters. Specifically *excluded* from this agreement are Gas Vented Direct Heating Equipment and Combination Water Heaters/ Space Heaters (Section II).

The Air Conditioning and Refrigeration Institute (ARI) Directory of Certified Unitary Products and Directory of Certified Applied Air-Conditioning Products can be used to verify certification of air-conditioning equipment.

The Appliance Efficiency Regulations require that a split system efficiency be based on the condenser/coil combination with the highest sales volume. ARI will prominently display in their directory a statement such as "In determining the efficiency of split systems, use the listed efficiency of the highest sales volume tested condenser/coil combinations indicated in the listings."

The Energy Hotline (see above) can verify certification of appliances not found in the above directories.

The Energy Commission's Web Site now includes listings of the most energy efficient appliances for several appliance types. The web site address is www.energy.ca.gov/efficiency/appliances/.

The complete appliance databases can be downloaded from the Energy Commission's internet FTP site (ftp://sna.com/pub/users/eff-tech/appliances). This requires database software (spreadsheet programs cannot handle some of the larger files). To use the data, a user must download the database file (or files), download a brand file and a manufacturer file and then decompress these files. Then download a description file that provides details on what is contained in each of the data fields. With these files, and using database software, the data can be sorted and manipulated.

Insulation Certification

Manufacturers whose insulating materials are certified for sale in California are listed in the Department of Consumer Affair's *Consumer Guide and Directory of Certified Insulation Material*. Each building department receives a copy of this directory. If an insulating product is not listed in the directory, or to purchase a directory, contact the Department of Consumer Affairs, Thermal Insulation Program, at (916) 574-2065.

Training Opportunities

If you are interested in attending a training seminar on the Residential Standards:

- Sign up to receive a free subscription to the *Blueprint*, a quarterly newsletter that answers questions on the standards not covered elsewhere, updated information on technical assistance and computer compliance programs, and lists training opportunities offered throughout the state. An order form is provided at the front of this *Manual*.
- Some colleges provide classes on building energy conservation and the energy

standards. Information about these classes should be obtained directly from the college.

- Energy consulting firms, organizations of energy consultants, building industry and trade associations, and organizations that serve building officials will often sponsor or conduct classes on compliance and enforcement of the Title 24 building energy efficiency standards. These classes are often listed in the *Blueprint* or posted on the Commission's website at http://www.energy.ca.gov/efficiency.

- Program vendors conduct seminars on the use of approved point system programs and approved computer methods. To contact program vendors for further information, refer to Appendix F or call the Energy Hotline for a listing of vendors who offer classes.

Chapter 2: Mandatory Measures

2.0 SUMMARY

This chapter discusses the conservation features and devices mandated by the *Energy Efficiency Standards* (standards). The Introduction (Part 2.1) explains the relationship of mandatory measures to the other building features that can be used for compliance with the standards. Part 2.2 discusses "proof of compliance." Parts 2.3, 4 and 5 cover each mandatory measure, grouped into building envelope, HVAC and hot water systems, and lighting and appliances. Each mandatory measure discussion includes, at a minimum, the language from the standards followed by compliance and enforcement guidelines and information. Part 2.6 contains sample forms used for mandatory measure compliance.

CHAPTER OVERVIEW:

Part	Topic	Page
2.1	**Introduction**	**2-1**
2.2	**Compliance**	**2-2**
2.3	**Building Envelope Mandatory Measures**	**2-2**
	Installation of Certified Insulating Material	2-3
	Ceiling Insulation	2-4
	Loose Fill Insulation	2-7
	Wall Insulation	2-7
	Raised Floor Insulation	2-11
	Slab Edge Insulation	2-12
	Insulation in Existing Buildings	2-14
	Fenestration/Exterior Doors	2-15
	Joints and Other Openings	2-20
	Vapor Barrier	2-22
	Special Infiltration Barrier	2-23
	Fireplaces, Decorative Gas Appliances and Gas Logs	2-24
2.4	**Space Conditioning, Water Heating and Plumbing System Measures**	**2-26**
	Systems and Equipment Certification, Appliance Efficiency Regulations	2-26
	Space Conditioning Sizing	2-29
	Setback Thermostats	2-30
	Heat Pump Controls	2-32
	Water Heater Tank Insulation	2-32
	Pipe Insulation	2-33
	Solar Water Heating	2-35
	Ducts, Plenums and Fans	2-36
	Pool/Spa Equipment	2-45
	Pilot Lights Prohibited	2-46
2.5	**Lighting**	**2-47**
	Kitchen Lighting	2-47
	Bathroom Lighting	2-49
	Recessed Lighting	2-50
2.6	**Sample forms**	**2-51**

Applicable sections of the California Code of Regulations, Title 24, Part 6: 101(b), 110-111, 112(b), 114-116, 117(a), 118., 150.

2.1 INTRODUCTION

All new residential construction covered by the standards and explained in this manual must meet or exceed certain minimum conservation levels, regardless of the compliance approach. These minimum requirements are referred to in the standards as ***mandatory measures.***

The building envelope includes the foundation, floor, walls, doors, windows, roofs and skylights. The building envelope measures regulate the levels and quality of insulation in the building, the amount of air leaking into or out of the building through various components such as door and window frames, and the labeling of windows and other fenestration products for their rated overall U-value and solar heat gain coefficient (SHGC).

An energy efficient building envelope will minimize the heat losses out of and heat gains into the dwelling. As a result, the space-conditioning system will use less energy to control the indoor temperature. This section discusses the mandatory features required to assure that the building envelope meets a minimum thermal performance level. Figure 2-1 graphically illustrates many of the mandatory measures required to be installed.

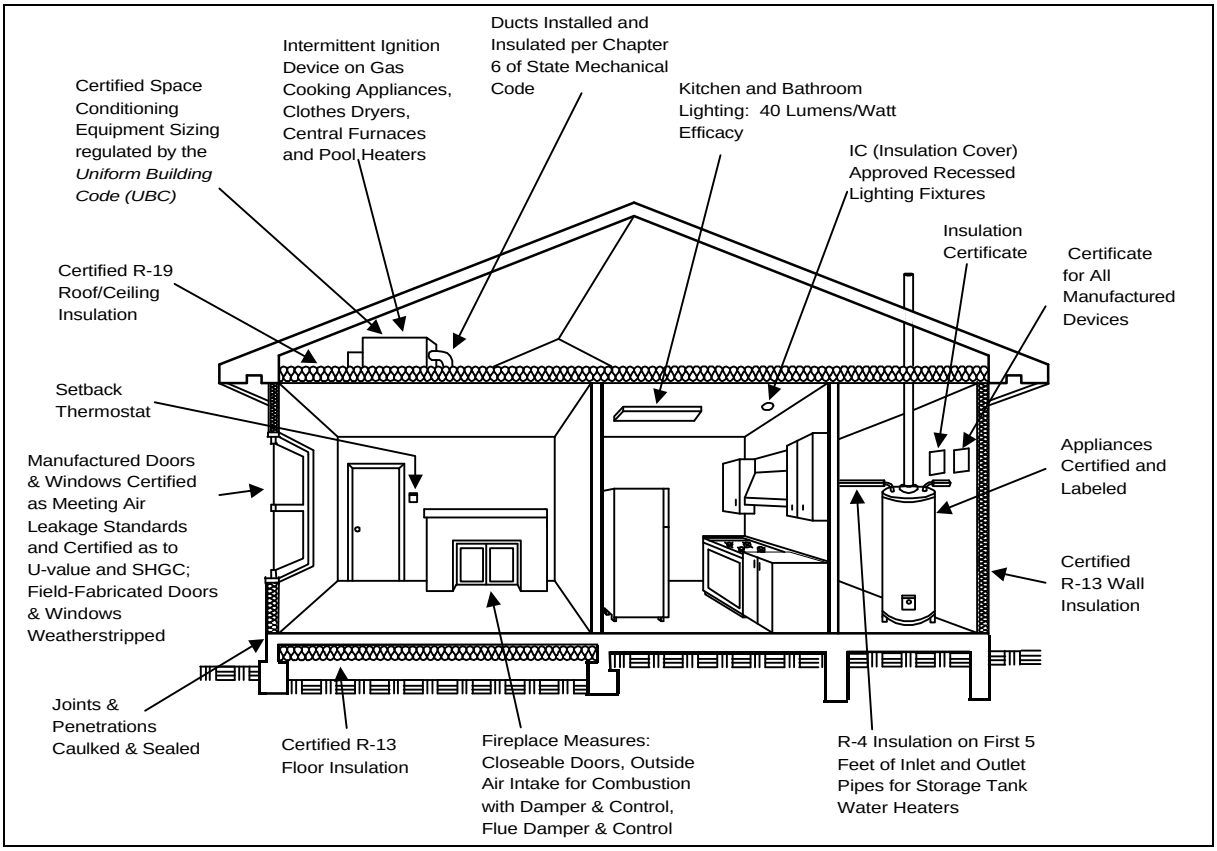

Figure 2-1: Installed Mandatory Measures

The mandatory measures represent a minimum level of conservation that may be in addition to or superseded by features required for compliance if more stringent.

2.2 COMPLIANCE

Introduction

Compliance

Proof of compliance with mandatory measures at the documentation stage is shown by including a Mandatory Measures Checklist (see MF-1R form in Part 2.6 or Appendix A) along with other compliance documentation.

Proof of compliance at the construction phase is shown by completing an Installation Certificate or insulation Certificate (see the CF-6R and IC-1 forms in Part 2.6 or Appendix A).

Both of these forms must be made available to the inspector during appropriate inspections, and copies must be provided to the original occupants of the building. See Chapter 1 for a full discussion of the Energy Code documentation requirements.

2.3 BUILDING ENVELOPE MANDATORY MEASURES

Introduction

Insulation

The R-value of insulation (or any material or building component) is the measure of its thermal resistance expressed in ft^2-hr-°F/Btu. This value may be obtained from Appendix B or from manufacturer's literature.

The rated R-value of mineral fiber (batt) insulation is based upon its fully expanded thickness. When the insulation is compressed, the R-value is reduced. For example, an R-19 batt of insulation expands to a thickness of six inches. If it is compressed into 2x6 framing with an actual depth of 5.5 inches, the insulation R-Value is lowered to R-17.8. See Table 2-1 for some common compressed insulation values.

Table 2-1: R-Values for Compressed Mineral Fiber Batt Insulation[1]

Standard R-Value	Nominal Lumber Size	Actual Cavity Depth	Compressed R-Value
13 (3.625")	2x4	3.5"	13
15 (3.5")	2x4	3.5	15
19 (6.25")	2x6	5.5"	17.8
21 (5.5")	2x6	5.5	21
22 (6.75")	2x6	5.5"	20
30 (9.5")[2]	2x10	9.25"	30
38 (12")[2]	2x12	11.25"	37

1. Based on manufacturer's data.

2. Note that batt insulation with these R-values is available in smaller thicknesses. R-30 may be achieved with an 8.25-inch to 8.5-inch batt, and R-38 may be achieved with a 10.25-inch to 10.5-inch batt. If this thinner insulation is used in the framing sizes listed here, the insulation would retain its full rated R-value because it would not be compressed.

The R-value of loose fill insulation depends on proper installation. See page 2-11.

Energy Code

Installation of Certified Insulating Material (Section 118)

(a) ***Certification by Manufacturers.*** *Any insulation of the type and form listed below may be installed only if the manufacturer has certified that the insulation complies with the California Quality Standards for Insulating Material, Title 20, Chapter 4, Article 3. See Appendix 1-A for availability of directories of certified insulating material.*

Type	*Form*
Aluminum foil	*reflective foil*
Cellular glass	*board form*
Cellulose fiber	*loose fill and spray applied*
Mineral aggregate	*board form*
Mineral fiber	*blankets, board form, loose fill*
Perlite	*loose fill*
Phenolic	*board form*
Polystyrene	*board form, molded extruded*
Polyurethane	*board form and field applied*
Polyisocyanurate	*board form and field applied*
Urea formaldehyde	*foam field applied*
Vermiculite	*loose fill*

(b) ***Installation of Urea Formaldehyde Foam Insulation.*** *Urea formaldehyde foam insulation may be applied or installed only if:*

1. *It is installed in exterior sidewalls; and*

2. *A four mil thick plastic polyethylene vapor barrier or equivalent plastic sheeting vapor barrier is installed between the urea formaldehyde foam insulation and the interior space in all applications.*

(c) ***Flamespread rating.*** *All insulating material shall be installed in compliance with the flamespread rating and smoke density requirements of Sections 2602 and 707 of the Title 24, Part 2.*

Compliance/ Plan Check

Installation of Certified Insulating Material

The California Quality Standards for Insulating Materials, which became effective on January 1, 1982, ensure that insulation sold or installed in the state performs according to the stated R-value and meets minimum quality, health and safety standards.

Manufacturers must certify all insulating materials to comply with California Quality Standards for Insulating Materials. Builders may not install the types of insulating materials indicated in Section 118(a) unless the product has been certified by the manufacturer. Builders and enforcement agencies should use the Department of Consumer

Affair's *Consumer Guide and Directory of Certified Insulation Material* to check compliance. Building departments receive a copy of the current directory. If an insulating product is not listed in the most recent edition of the directory, or to purchase a directory, contact the Department of Consumer Affairs Thermal Insulation Program at (916) 574-2065.

NOTE:

Urea Formaldehyde is restricted by Section 1553 of Title 20. If such products are certified, this is verification that the restrictions of Section 1553 were met. The restrictions in Section 118 also apply.

California Quality Standards for Insulating Materials also require that all exposed installations of faced mineral fiber and mineral aggregate insulations must use fire retardant facings. Exposed installations are those where the insulation facings do not touch a ceiling, wall or floor surface, and faced batts on the underside of roofs with an air space between the ceiling and facing. These installations require insulation that has been tested and certified not to exceed a flame spread of 25 and a smoke development rating of 450.

Inspection

Installation of Certified Insulating Material

Flame spread ratings and smoke development ratings are shown on the insulation or packaging material or may be obtained from the manufacturer.

An Insulation Certificate (IC-1) signed by the insulation installer must be posted in a conspicuous location or made available with the building permit at the time of installation and inspections.

Energy Code

Ceiling Insulation (Section 150(a))

(a) ***Ceiling Insulation.*** *The opaque portions of ceilings separating conditioned spaces from unconditioned spaces or ambient air shall meet the requirements of either 1 or 2 below:*

1. *Ceilings shall be insulated between wood framing members with insulation resulting in an installed thermal resistance of R-19 or greater for the insulation alone.*

   ALTERNATIVE to Section 150(a)1.: Insulation which is not penetrated by framing members may meet an R-value equivalent to installing R-19 insulation between wood framing members and accounting for the thermal effects of framing members.

2. *The weighted average U-value of ceilings shall not exceed the U-value that would result from installing R-19 insulation between wood framing members in the entire ceiling and accounting for the effects of framing members.*

Compliance/ Plan Check

Ceiling Insulation

R-19 is a mandatory *minimum* level of insulation in a wood frame assembly. This minimum level is typically superseded by requirements of the compliance approach. The insulation may be of greater insulating value in certain areas of the ceiling and of lesser insulating value in other areas of the ceiling provided the overall weighted average U-value does not exceed the equivalent R-19 framed value (maximum U-value less than or equal to 0.051) as documented on a Form 3R, explained in Appendix G, *Glossary*, *R-Value*.

Insulation not penetrated by framing, such as rigid insulation, can comply with this insulation requirement if the assembly U-value is less than or equal to 0.051. Compliance can be documented with a Form 3R.

Metal or steel frame assemblies cannot use a Form 3R but have several options available. Use precalculated U-values from Appendix G, precalculated metal frame assemblies from Appendix I, calculate the assembly U-values using form ENV-3 for metal frame assemblies (see Appendix I), or use EZFRAME (see Appendix E) or another method based on the ASHRAE zonal method (1993 *ASHRAE Handbook of Fundamentals*).

Insulation must be certified in compliance with Section 118 (see page 2-3). Ceiling insulation should extend far enough to the outside walls to cover the top plate. However, insulation should not block eave vents in attics because if the flow of air is blocked, water vapor may condense on the underside of the roof, reducing the insulation's effectiveness and possibly cause structural damage. (See Figures 2-2 and 2-3.)

Where a roof slopes down, insulation may be tapered at the wall. An elevated truss or similar treatment is not needed for full insulation depth at the outside of the wall, but may be desirable. If insulation is tapered for more than three feet from the outside wall, this must be reflected in a weighted average U-value calculation for the ceiling assembly as shown in the compliance documentation.

Ceiling insulation levels should correspond to levels specified on the CF-1R and IC-1 (insulation certificate) forms. Although R-19 between wood framing is the minimum mandatory level for ceiling insulation between wood framing members, the package or performance requirement may establish a higher level.

Fiberglass insulation levels are labeled on the insulation face and should be verified against the levels required by the CF-1R.

Clearances: Incandescent recessed fixtures must be approved for zero-clearance insulation cover (IC-rated). Alternatively, a box built over a recessed fixture to provide clearance between the fixture and the insulation is acceptable. Insulation clearances from appliances should meet manufacturer specifications and local code restrictions should be verified.

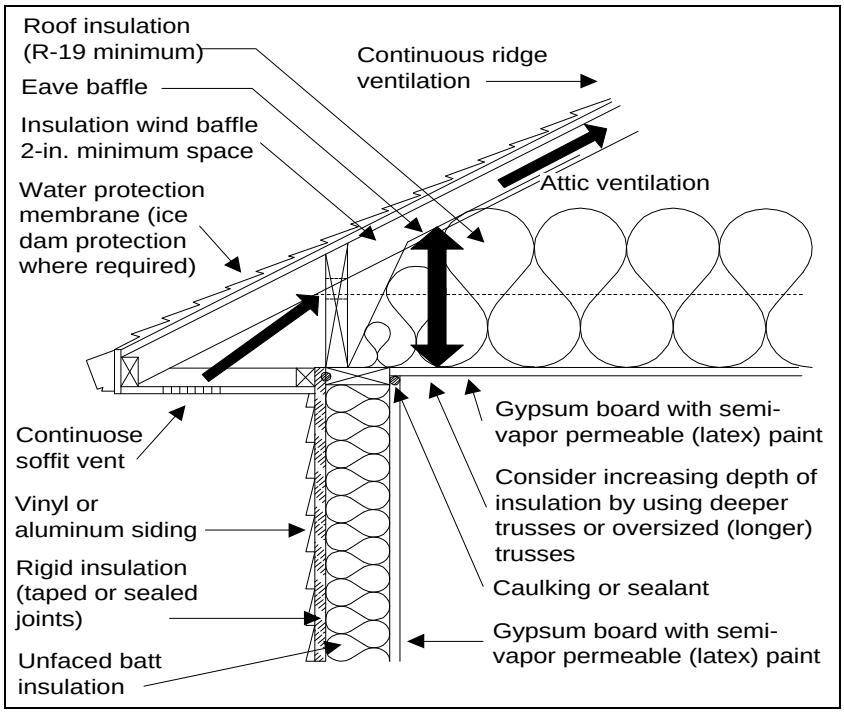

Figure 2-2: Ceiling Insulation Construction Detail

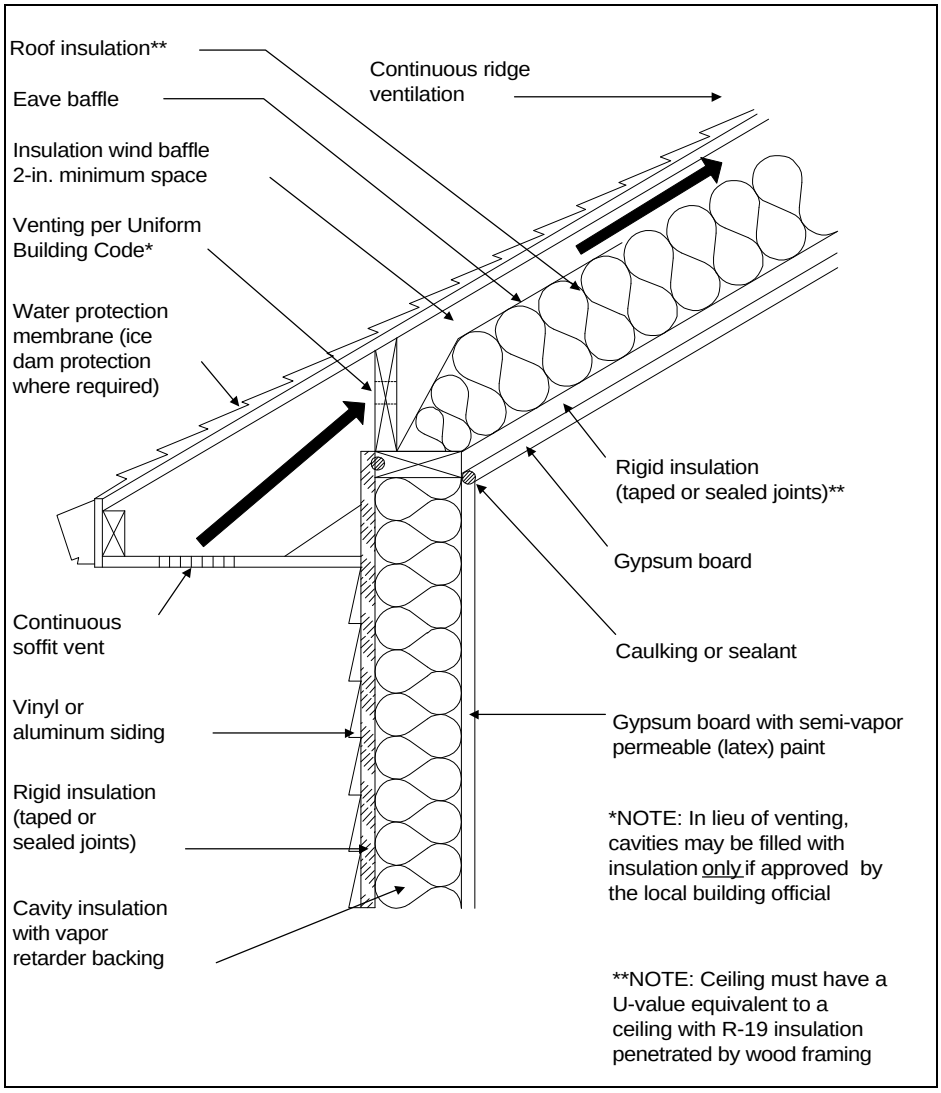

Figure 2-3: Cathedral Ceiling

Where ceiling insulation is installed next to eave or soffit vents, a rigid baffle should be installed at the top plate to direct ventilation air up and over the ceiling insulation. The baffle should extend beyond the height of the ceiling insulation and should have sufficient clearance between the baffle and roof deck at the top (see Figures 2-2 and 2-3).

Loose fill insulation should be blown in evenly and insulation levels can be verified by checking that the depth of insulation conforms to the manufacturer's coverage chart for the listed R-value. Additionally, three criteria the installer must consider are: 1) roof slope, 2) ceiling slope and 3) clearance. The installer should follow the guidelines shown in the construction portion for loose fill insulation (see below).

Incandescent recessed fixtures must be approved for a zero-clearance insulation cover. Insulation clearances from appliances should meet manufacturer specifications and local code restrictions should be verified.

The Insulation Certificate (IC-1) must be completed and signed by the insulation contractor or general contractor. This form is either posted at the job site or made available during inspection and when completed, a copy of this form must be provided to the first occupant of the building.

Examples

Ceiling Insulation

Example 2-1

A computer method analysis shows that a new house requires R-30 ceiling insulation to comply using the performance approach, but the minimum mandatory insulation level for ceiling insulation is only R-19. The higher insulation level must be installed for the building to comply.

Example 2-2

A small addition to an existing house appears to comply with only R-15 ceiling insulation using a performance approach. However, R-15 would not be sufficient because the required minimum ceiling insulation level established by the mandatory measures is R-19.

Energy Code

Loose Fill Insulation (Section 150(b))

(b) ***Loose Fill Insulation.*** *When loose fill insulation is installed, the minimum installed weight per square foot shall conform with the insulation manufacturer's installed design weight per square foot at the manufacturer's labeled R-value.*

Construction

Loose Fill Insulation

When loose fill insulation is installed, it should be blown in evenly. The minimum installed weight per square foot and the minimum depth must conform to the insulation manufacturer's coverage chart for the listed R-value. Three criteria to consider are: (1) roof slope, (2) ceiling slope, and (3) clearance (all criteria are recommendations to ensure even distribution and that insulation installed on a sloped surface does not settle to the extent that it becomes ineffective as a barrier between the conditioned and unconditioned space):

1. For a fairly typical situation where the ceiling is flat and the roof is sloped, the recommendation is that the roof slope be at minimum a 2-1/2 foot rise in a 12-foot run. This is to allow enough room between the ceiling and roof for sufficient insulation thickness.

2. If the ceiling is sloped, loose fill can be used if the slope is no more than a six foot rise in a 12 foot run and manufacturer's restrictions are not exceeded. If, however, the ceiling slope is steep (greater than six feet in 12 feet), loose fill insulation should not be used unless it incorporates non-water soluble adhesive binder.

3. The recommendation of a 30 inch clearance, from the top of the bottom chord of the truss or ceiling joists to the underside of the roof sheathing, is to facilitate installation and inspection.

When eave vents are installed, adequate baffling of vent openings shall be provided to deflect the incoming air above the surface of the material and shall be installed at the soffit. Baffles shall be in place at the time of framing inspection.

Inspection

Loose Fill Insulation

Follow the above guidelines when inspecting loose fill insulation to ensure adequate coverage, baffling at eave vents and installation in accordance with manufacturer specifications.

Energy Code

Wall Insulation (Section 150(c))

(c) ***Wall Insulation.*** *The opaque portions of frame walls separating conditioned spaces from unconditioned spaces or ambient air shall meet the requirements of either 1 or 2 below:*

1. Wood framed walls shall be insulated between framing members with insulation having an installed thermal resistance of R-13 or greater. Framed foundation walls of heated basements or heated crawl spaces shall be insulated above the adjacent outside ground line with insulation having an installed thermal resistance of at least R-13.

ALTERNATIVE to Section 150(c)1.: Insulation which is not penetrated by framing members may meet an R-value

equivalent to installing R-13 insulation between wood framing members and accounting for the thermal effects of framing members.

2. *The weighted average U-value of walls shall not exceed the U-value that would result from installing R-13 insulation between wood framing members and accounting for the effects of framing members.*

Compliance/ Plan Check

Wall Insulation

Compliance for wood frame walls can be met by specifying at least R-13 insulation between framing members (the compliance approach may require a higher level). A U-value can be determined by using standard values from Appendix G, Table G-14 (no Form 3R is required when these values are used). Appendix I contains pre-calculated Form 3Rs for assemblies with rigid insulation (a copy of the form may be submitted with compliance documentation). An assembly U-value may also be calculated using the directions for completing a Form 3R (see Appendix G).

Metal or steel frame assemblies cannot use a Form 3R but have several other options. Use precalculated values from Appendix G, precalculated metal frame assemblies from Appendix I, calculate the assembly U-values using form ENV-3 for metal frame assemblies (see Appendix I), or use EZFRAME or another method based on the ASHRAE zonal method (1993 *ASHRAE Handbook of Fundamentals*).

Walls that have no framing, such as masonry or concrete exterior walls, do not have to be insulated with R-13 insulation (see Figure 2-4A), but will have to meet the minimum heavy or light mass requirements if using a prescriptive approach.

Framed foundation walls of heated basements or heated crawl spaces must be insulated above the adjacent outside ground line with at least R-13 insulation. Also, alternative component package D in Climate Zone 16 requires R-13 insulation on below grade concrete walls (see Chapter 3).

Insulation not penetrated by framing members, such as rigid insulation over the face of framing, may meet an R-value equivalent to a wall with R-13 insulation adjusted for the effects of wood framing 16" o.c. (maximum U-value 0.088). Documenting equivalency for a wall assembly may also be shown on the Form-3R (see G*lossary, R-Value)*.

Insulation may be of greater insulating value in certain areas of the wall and of lesser insulating value in other areas of the wall provided that the overall weighted average U-value does not exceed the equivalent R-13 framed value (maximum U-value less than or equal to 0.088).

As an alternative, U-values for concrete and masonry walls can be determined using the simplified masonry calculation method and Form 3R (see Appendix H).

NOTE:

An existing structure, such as a garage, with R-11 framed walls that is showing compliance with a performance approach, need not comply with the mandatory R-13 wall insulation. The addition must achieve compliance under an energy budget approach with R-11 insulation in these walls.

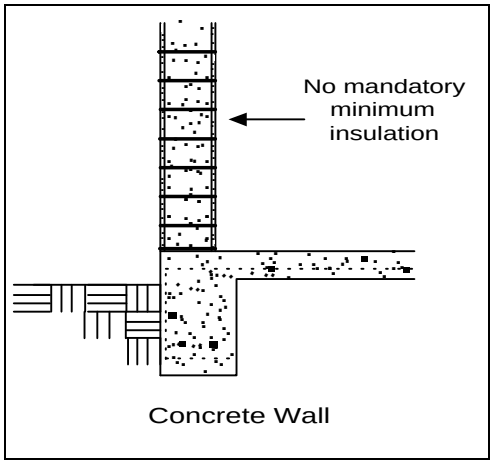

Figure 2-4A: Concrete Wall Insulation

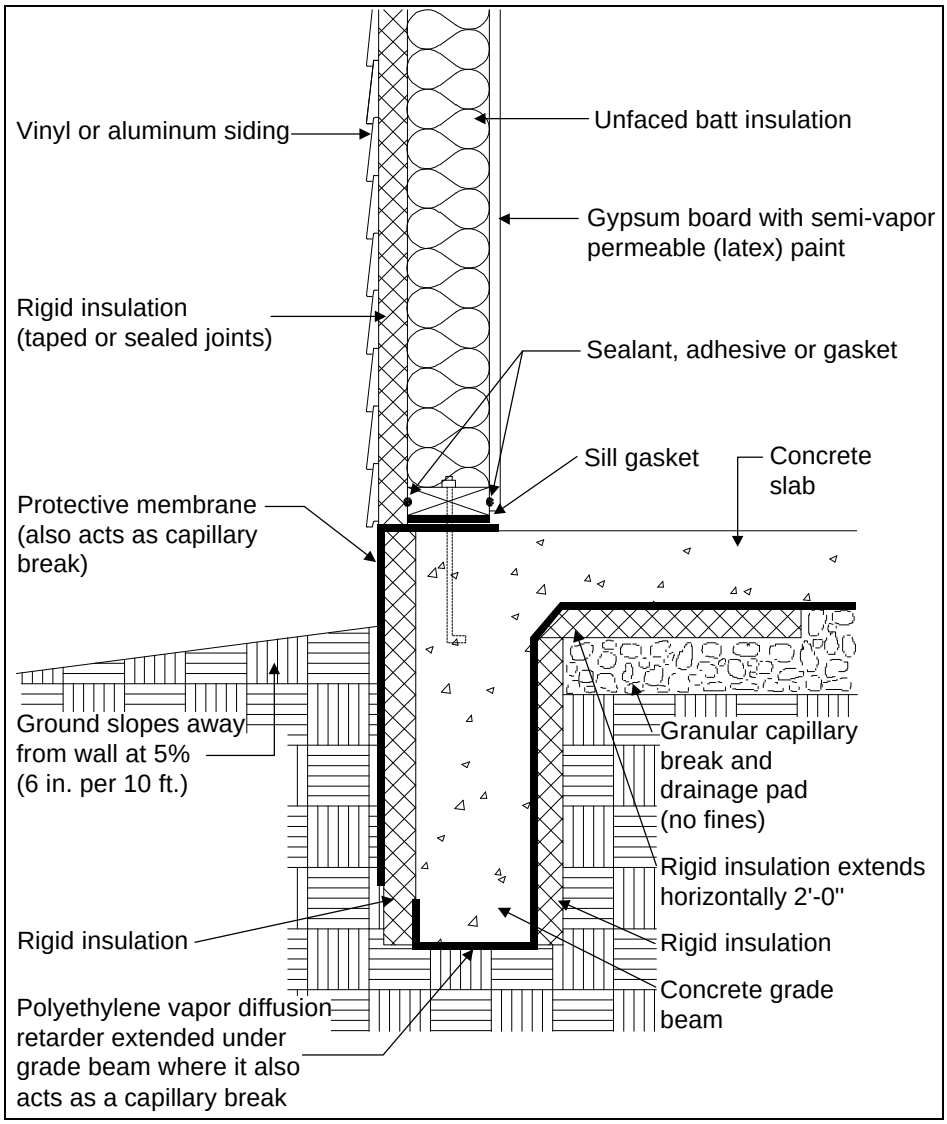

Figure 2-4B: Construction Details, Wood-Framed Wall with Vinyl or Aluminum Siding, Mandatory Minimum R-13 Insulation or U-value ≤ 0.088

Construction

Wall Insulation

A change from wood framing to metal framing can significantly affect compliance. These two framing types are not interchangeable. Metal frame wall construction requires rigid insulation in order to meet the mandatory minimum wall insulation level (U-value less than or equal to 0.088), Therefore, if compliance calculations indicate wood frame construction, either the compliance calculations must be redone with the correct assembly, or a metal frame construction with an equivalent U-value is required (R-5 rigid insulation with R-15 batt in 2x4 metal framing, 24" o.c.; R-4 rigid insulation with R-19 batt in a 2x6, 24" o.c.).

Rim joists between the stories of a multi-story building are part of the wall and must be insulated to the same level as the wall.

Wall insulation levels should correspond to levels specified on the CF-1R and IC-1 (Insulation Certificate) forms.

R-13 between wood framing is the minimum mandatory requirement; the package or performance requirement may establish a higher level. This requirement can be met with R-13 cavity insulation in a wood framed wall or with a weighted average U-value that is equivalent (maximum U-value 0.088).

Metal framed walls will require rigid insulation to achieve the maximum 0.088 U-value.

Walls that have no framing, such as masonry or concrete, are not required to meet this minimum requirement but may have other insulation requirements as indicated on the CF-1R.

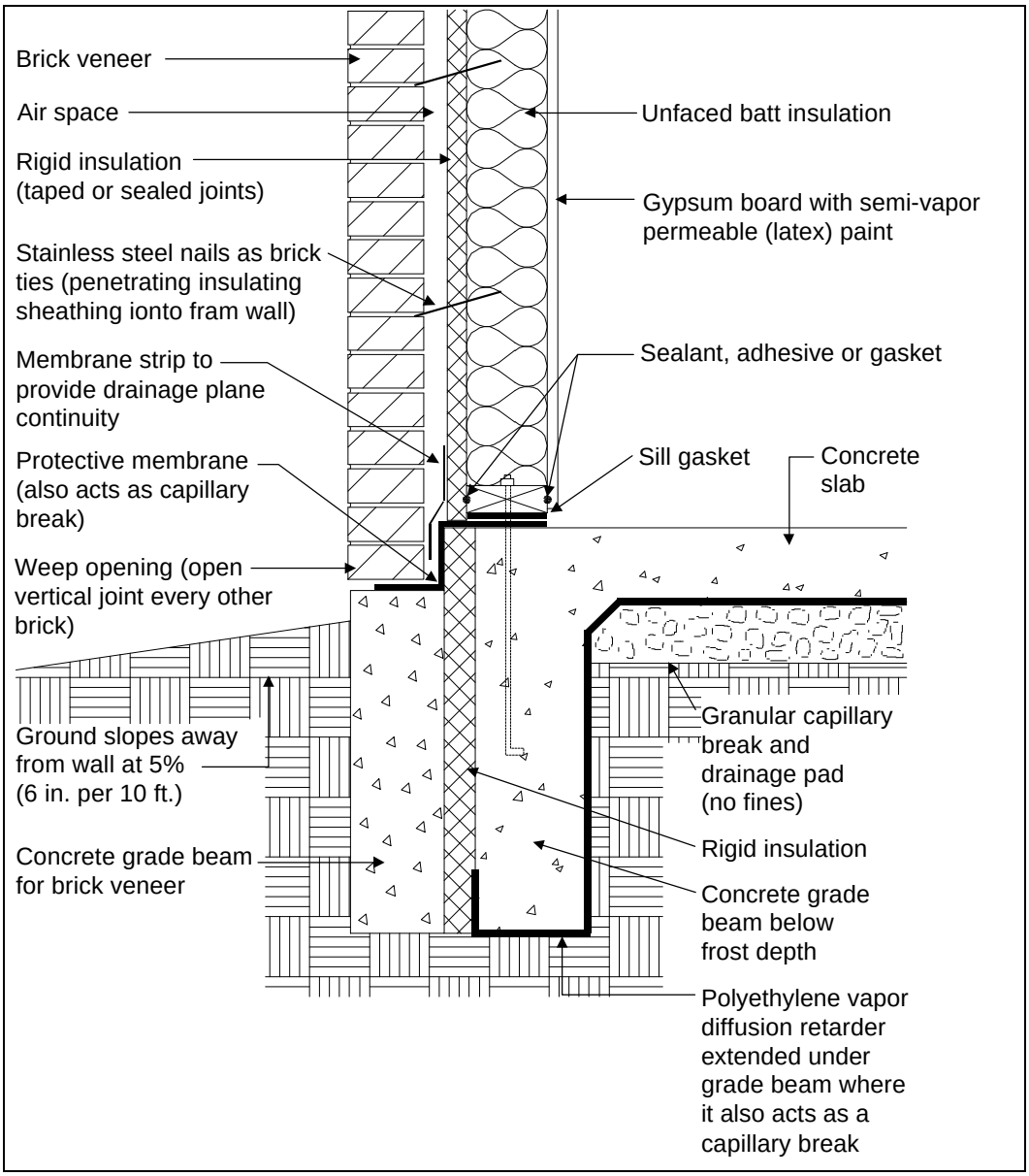

Figure 2-4C: Construction Details, Wood-Framed Wall with Brick Veneer, Mandatory Minimum R-13 Insulation or U-value ≤ 0.088

The Insulation Certificate (IC-1) must also be completed, signed by the insulation contractor or general contractor. The insulation levels, including rigid insulation, must be consistent with information on the CF-1R. This form is either posted at the job site or made available during inspection and when completed, a copy of this form must be provided to the first occupant of the building.

The R-value of different types of rigid insulation can vary significantly. If rigid insulation is specified on the plans, verify that the type installed is consistent with those specifications.

Because it is difficult to inspect wall insulation between tub/shower enclosures after the enclosure is installed, insulation of these wall sections should be inspected during the framing inspection.

Batt insulation should fill the wall cavity evenly and the kraft facing should be installed per manufacturer recommendations to minimize air leakage and avoid sagging in the insulation.

Wall insulation should extend into the perimeter floor joist (rim joist) cavities along the same plane as the wall.

If a vapor barrier is required, it must face the conditioned space on all installations.

Examples

Wall Insulation

Do new residential buildings or additions consisting of block walls (for example, converting a garage into living space) have to comply with the R-13 minimum wall insulation requirement? If not, what insulation R-value do they need?

No, the mandatory wall insulation requirement for R-13 applies to frame walls only. The amount of insulation needed, if any, will vary depending on the compliance approach selected. Performance compliance (computer) with the standards may not require any additional insulation if the overall compliance is achieved without insulation in that space. Prescriptive compliance may require some level of insulation, depending on the climate zone, package selected, and whether the walls are light (block) or heavy mass. Use *Residential Manual* Appendix B, Materials Reference, to determine the R-value of the mass wall alone. If additional insulation is required, it must be integral with the wall or installed on the outside of the mass wall (*Energy Efficiency Standards*, Section 151(f), Tables No. 1-Z1 through 1-Z16, Note 2).

If I build a steel framed wall with R-13 insulation between the framing, does this comply with mandatory wall insulation requirements?

No. The wall must have the equivalent U-value as a wood framed wall with R-13 insulation, which is 0.088 U-value or better (lower) (Section 150(c)2). To determine if a steel frame assembly meets this U-value, you have several options.

- Use one of the pre-calculated assemblies found in Appendix I of the *Residential Manual*.
- Calculate the U-value using an ENV-3 for steel frame construction (from Appendix I or from the *Nonresidential Manual*.
- Calculate the U-value using EZFRAME or another method based on ASHRAE zone method.

You *cannot* use any of the following to document the U-value of a steel frame wall:

- Form 3R or any parallel path method,
- values from Chapter 4, Table 4-4, in the *Residential Manual* which exceed 0.088 U-value, or
- any U-value which is more than 10 percent different than values found in or calculated using one of the above referenced sources.

Energy Code

Raised Floor Insulation (Section 150(d))

(d) ***Raised Floor Insulation.*** *Raised floors separating conditioned space from unconditioned space shall meet the requirements of either 1 or 2 below:*

1. *Floors shall be insulated between wood framing members with insulation having an installed thermal resistance of R-13 or greater.*

2. *The weighted average U-value of floor assemblies shall not exceed the U-value that would result from installing R-13 insulation between wood framing members and accounting for the effects of framing members.*

ALTERNATIVE to Section 150(d) 1. and 2.: Raised floor insulation may be omitted if the foundation walls are insulated to meet the wall insulation minimums shown in Tables No. 1-Z1 through 1-Z16, a vapor barrier is placed over the entire floor of the crawl space, and vents are fitted with automatically operated louvers that are temperature actuated.

Compliance/ Plan Check

Raised Floor Insulation

The raised floor insulation may be of greater insulating value in some areas and of lesser insulating value in other areas of the raised floor, provided the overall weighted average U-value does not exceed the equivalent R-13 framed value (maximum U-value less than or equal to 0.064).

Insulation that is not penetrated by framing members, such as rigid insulation over the face of framing, may meet a U-value equivalent to a wood framed floor with R-13 insulation adjusted for the effects of wood framing (U-value less than or equal to 0.064). Documenting equivalence may also be shown using Form-3R (see *Glossary*, *R-Value)*.

NOTE:

The approved computer methods (see Chapter 4) provide a thermal credit equivalent to R-6 insulation in raised floors over crawl spaces. The maximum raised floor U-value of 0.064 cannot be met by including the effects of the R-6 crawl space.

NOTE:

An alternative to meeting the minimum raised floor insulation level is to meet all criteria of *Controlled Ventilation Crawl Spaces* described in the Chapter 7, Part 7.7. If all eligibility and installation criteria for a controlled ventilated crawl space are met, raised floors above the controlled ventilation crawl space need not meet the minimum insulation requirement.

Inspection

Raised Floor Insulation

If the building has a wood raised floor, a minimum of R-13 insulation is required (see Figure 2-5). Check the CF-1R for the required insulation level.

The IC-1 must be completed and signed by the installing contractor or the project's general contractor. The insulation levels specified on both forms must be consistent.

For proper installation, floor insulation should be installed flush against the subfloor, stapled to the floor joists and supported with netting stapled to the underside of floor joists, or supported with wires running perpendicular to the joists. Floor insulation should not cover foundation vents.

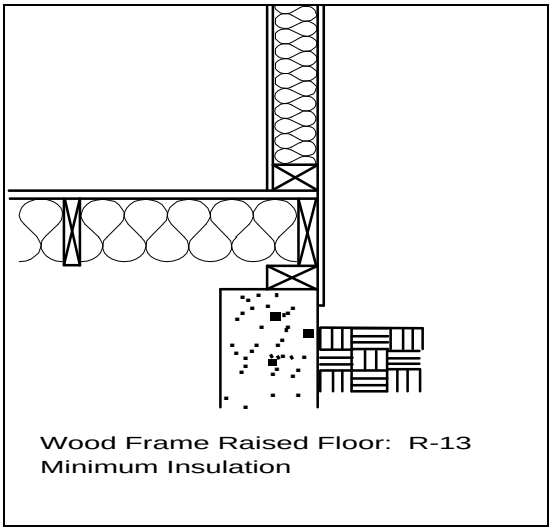

Figure 2-5: Raised Floor Insulation

Energy Code

Slab Edge Insulation (Section 150(l))

(l) ***Slab Edge Insulation.*** *Material used for slab edge insulation shall meet the following minimum specifications:*

1. *Water absorption rate no greater than 0.3 percent when tested in accordance with ASTM-C-271-94.*

2. *Water vapor permeance no greater than 2.0 perm/inch when tested in accordance with ASTM-E-96-95.*

2. *Concrete slab perimeter insulation must be protected from physical damage and ultra violet light deterioration.*

Slab Edge Insulation

Compliance/
Plan Check

Slab edge insulation is not a mandatory requirement for typical slab-on-grade construction, however, it may be required by the prescriptive package (see Chapter 3), or used for credit in the compliance calculations.

Slab edge insulation (R-10) is mandatory with hydronic heating systems with the distribution piping in the slab. As with other mandatory requirements, it is not modeled or assumed as part of the compliance calculations.

Construction

Slab Edge Insulation

Slab edge insulation reduces heat loss through the slab perimeter. When required, as indicated on the CF-1R, the material used must meet the above specifications.

An example of an insulating material that meets these specifications is smooth-skin extruded polystyrene.

See Figure 2-6 and Chapter 3 for installation criteria.

Slab Edge Insulation

Inspection

If slab edge insulation is indicated on the CF-1R, it is inspected during the foundation inspection. The IC-1 must also be completed and signed by the installing contractor or the project's general contractor. The insulation levels specified on both forms must be consistent.

The R-value and water absorption/permeance properties should be stamped on the insulation, or the installing contractor should provide manufacturer's literature to verify these requirements

The slab edge must be protected from physical damage and ultra-violet light deterioration when installed on the exterior footing. Slab edge is not required around the garage, between the house and the porch, or between the garage and the house.

Slab edge insulation is not required around the garage, between the house and the porch, or between the garage and the house.

NOTE:

In a building with a hydronic radiant slab floor heating system, R-10 slab edge insulation must be installed.

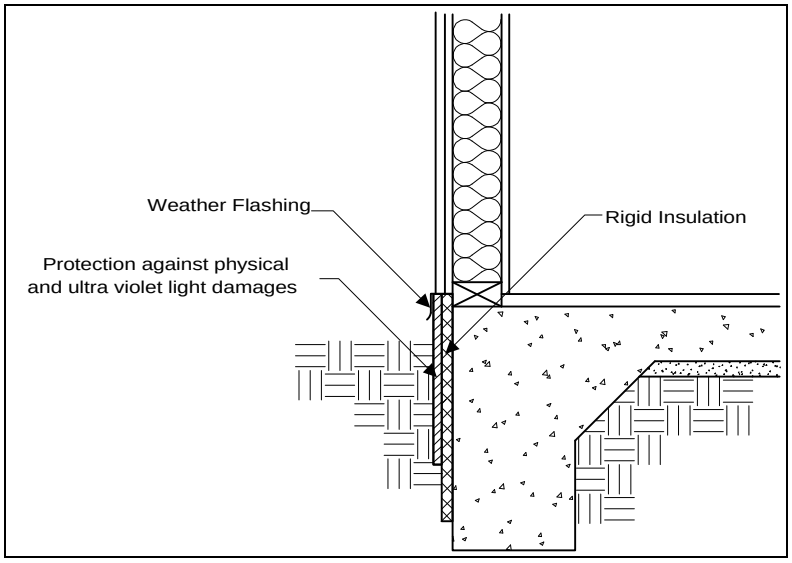

Figure 2-6: Slab Edge Insulation

Examples

Slab Edge Insulation

What are the slab edge insulation requirements for a hydronic heating system with the hot water pipes in the slab?

The requirements for slab edge insulation can be found in *Energy Efficiency Standards*, Sections 150(l) and 151(f)1., as described and in Chapter 3, and 3.2 of this manual.

Material and installation specifications:

- R-10 installed to a depth of 16 inches or to the depth of the footing, whichever is less,
- protected from physical damage and ultraviolet light deterioration,
- water absorption rate no greater than 0.3 percent (ASTM-C-271), and
- water vapor permeance no greater than 2.0 per/inch (ASTM-E-96-90).

Modeling assumptions:

- Do not model or calculate R-10 insulation; it is a mandatory requirement for this type of heating system. Instead assume R-0 in climate zones 1-15 or R-7 in climate zone 16.

Energy Code

Insulation in Existing Buildings (Section 118(d))

(d) ***Installation of Insulation in Existing Buildings****. Insulation installed in an existing attic, or on an existing duct or water heater, shall comply with the applicable requirements of this subsection. If a contractor installs the insulation, the contractor shall certify to the customer, in writing, that the insulation meets the applicable requirements of this subsection.*

1. ***Attics****. If insulation is installed in the existing attic of a low-rise residential building, the R-value of the total amount of insulation (after addition of insulation to the amount, if any, already in the attic) shall be at least R-30, if the building is located in an area that has less than 5,000 heating degree days, or R-38 if the building is located in an area that has 5,000 heating degree days or more.*

EXCEPTION to Section 118(d)1.: Where the accessible space in the attic is not large enough to accommodate the required R-value, the entire accessible space shall be filled with insulation provided such installation does not violate Section 1505.3 of Title 24, Part 2.

2. Water Heaters. If external insulation is installed on an existing unfired water storage tank or on an existing back up tank for a solar water heating systems, it shall have an R-value of at least R-12, or the heat loss of the tank surface based on an 80°F water-air temperature difference shall be less than 6.5 Btus per hour per square foot.

3. Ducts. If insulation is installed on an existing space conditioning duct, it shall comply with Section 604 of the UMC.

Compliance/ Plan Check

Insulation in Existing Buildings

EXISTING ATTIC

When insulation is being installed in an existing, accessible attic it must meet or exceed:

- **R-30** if the building is located in an area that has less than 5,000 heating degree days; or
- **R-38** if the building is located in an area that has 5,000 heating degree days or more.

Heating degree days for 641 California locations can be found in Appendix C.

EXISTING STORAGE TANKS

There are no requirements for typical storage water heaters. If a permit applicant is adding insulation to an unfired water heater (e.g., holding tank for a boiler) or an existing back-up tank for a solar water heating system, at least R-12 must be added.

EXISTING DUCT SYSTEM

When a permit applicant is adding insulation to an existing duct system, R-4.2 insulation is required, unless cooling system ducts are installed on the roof or heating system ducts are installed on the roof in an area with more than 8,000 heating degree days where a minimum of R-6.3 insulation is required by the UMC. Heating degree days for 641 California locations can be found in Appendix C. See Part 2.4 for installation guidelines.

Inspection

Insulation in Existing Buildings

Installation of ceiling insulation should match guidelines contained in discussions under “ceiling insulation,” “loose fill insulation” and “certified insulating materials” in this chapter.

An Insulation Certificate (IC-1) must be completed, signed by the insulation contractor or general contractor. This form can either be posted at the job site or given to the building owner.

Energy Code

Fenestration Products and Exterior Doors (Section 116, 101(b)

(a) ***Certification of Fenestration Products and Exterior Doors.*** *Any fenestration product and exterior door, other than field-fabricated fenestration products and field-fabricated exterior doors, may be installed only if the manufacturer has certified to the Commission, or if an independent certifying organization approved by the Commission has certified, that the product complies with all of the applicable requirements of this subsection.*

1. ***Air Leakage.*** *Manufactured fenestration products and exterior doors shall have air infiltration rates not exceeding 0.3 cfm/ft² of window area, 0.3 cfm/ft² of door area for residential doors, 0.3 cfm/ft² of door area for nonresidential single doors (swinging and sliding), and 1.0 cfm/ft² for nonresidential double doors (swinging), when tested according to NFRC-400-95 or ASTM E283-91 at a pressure differential of 75 pascals or 1.57 pounds/ft², incorporated herein by reference.*

2. ***U-value and SHGC.*** *Fenestration products shall:*

   A. *Be certified for overall U-values as rated in accordance with the National Fenestration Rating Council's NFRC-100-91 (1991), or NFRC 100 (1997) and be certified for overall SHGC, as rated in accordance with the National Fenestration Rating Council's NFRC 200 (1995), incorporated herein by reference, or such values shall be certified in accordance with a default table method set forth in Section 10-111; and*

   B. *Have a temporary label meeting the requirements of Section 10-111(a)(1), not to be removed before inspection by the enforcement agency, listing the certified U-value and SHGC, and certifying that the air infiltration requirements of Section 116(a)1. are met for each product line; and*

   C. *Have a permanent label meeting the requirements of Section 10-111(a)(2) if the product is rated using NFRC procedures.*

EXCEPTION to Section 116(a): Fenestration products removed and reinstalled as part of a building alteration or addition.

EXCEPTION to Section 116(a)2: Glazed wall systems and overhead glazing in buildings covered by the nonresidential standards shall have SHGC and U-values determined in accordance with NFRC procedures or default values set forth in Section 116(a)2.A. Temporary and permanent labels are not required.

(b) ***Installation of Field-Fabricated Fenestration Products and Exterior Doors.*** *Field-fabricated fenestration products and exterior doors shall be caulked between the fenestration products or exterior door and the building, and shall be weatherstripped.*

EXCEPTION to Section 116(b): Unframed glass doors and fire doors.

Table No. 1-D
DEFAULT FENESTRATION PRODUCT U-VALUES

Frame Type[1]	***Product Type***	***Single Pane U-value***	***Double Pane U-value[2]***
Metal	*Operable*	*1.28*	*0.87*
Metal	*Fixed*	*1.19*	*0.72*
Metal	*Greenhouse/Garden window*	*2.26*	*1.40*
Metal	*Doors*	*1.25*	*0.85*
Metal	*Skylight*	*1.72*	*0.94*
Metal, Thermal Break	*Operable*		*0.71*
Metal, Thermal Break	*Fixed*		*0.60*
Metal, Thermal Break	*Greenhouse/Garden window*		*1.12*
Metal, Thermal Break	*Doors*		*0.64*
Metal, Thermal Break	*Skylight*		*0.80*
Non-Metal	*Operable*	*0.99*	*0.60*
Non-Metal	*Fixed*	*1.04*	*0.57*
Non-Metal	*Doors*	*0.99*	*0.55*
Non-Metal	*Greenhouse/Garden windows*	*1.94*	*1.06*
Non-Metal	*Skylight*	*1.47*	*0.68*

[1] Metal includes any field-fabricated product with metal cladding. Non-metal framed manufactured fenestration products with metal cladding must add 0.04 to the listed U-value. Non-Metal frame types can include metal fasteners, hardware, and door thresholds. Thermal break product design characteristics are:

- *a. The material used as the thermal break must have a thermal conductivity of not more than 3.6 Btu-inch/hr/ft^2/°F,*
- *b. The thermal break must produce a gap of not less than 0.210", and*
- *c. All metal members of the fenestration product exposed to interior and exterior air must incorporate a thermal break meeting the criteria in (a) and (b) above.*

In addition, the fenestration product must be clearly labeled by the manufacturer that it qualifies as a thermally broken product in accordance with this standard.

[2]For all dual glazed fenestration products, adjust the listed U-values as follows:

- *a. Subtract 0.05 for spacers of 7/16" or wider.*
- *b. Subtract 0.05 for products certified by the manufacturer as low-E glazing.*
- *c. Add 0.05 for products with dividers between panes if spacer is less than 7/16" wide.*
- *d. Add 0.05 to any product with true divided lite (dividers through the panes).*

Table No. 1-E
DEFAULT SOLAR HEAT GAIN COEFFICIENT

			Total Window SHGC	
			Single	Double
Frame Type	***Product***	***Glazing***	***Pane***	***Pane***
Metal	*Operable*	*Uncoated*	*0.80*	*0.70*
Metal	*Fixed*	*Uncoated*	*0.83*	*0.73*
Metal	*Operable*	*Tinted*	*0.67*	*0.59*
Metal	*Fixed*	*Tinted*	*0.68*	*0.60*
Metal, Thermal Break	*Operable*	*Uncoated*	*0.72*	*0.63*
Metal, Thermal Break	*Fixed*	*Uncoated*	*0.78*	*0.69*
Metal, Thermal Break	*Operable*	*Tinted*	*0.60*	*0.53*
Metal, Thermal Break	*Fixed*	*Tinted*	*0.65*	*0.57*
Non-Metal	*Operable*	*Uncoated*	*0.74*	*0.65*
Non-Metal	*Fixed*	*Uncoated*	*0.76*	*0.67*
Non-Metal	*Operable*	*Tinted*	*0.60*	*0.53*
Non-Metal	*Fixed*	*Tinted*	*0.63*	*0.55*

SC = Shading Coefficient
SHGC = Solar Heat Gain Coefficient

Section 101(b):

DUAL-GLAZED GREENHOUSE WINDOWS are a type of dual-glazed fenestration product which adds conditioned volume but not conditioned floor area to a building.

EXTERIOR DOOR is a door through an exterior partition that is opaque or has a glazed area that is less than or equal to one-half of the door area. Doors with a glazed area of more than one-half of the door area are treated as a fenestration product.

FENESTRATION PRODUCT is any transparent or translucent material plus any sash, frame, mullions, and dividers, in the envelope of a building, including, but not limited to: windows, sliding glass doors, french doors, skylights, curtain walls, garden windows, and other doors with a glazed area of more than one-half of the door area.

FIELD-FABRICATED FENESTRATION PRODUCT OR EXTERIOR DOOR is a fenestration product or exterior door whose frame is made at the construction site of standard dimensional lumber or other materials that were not previously cut, or otherwise formed with the specific intention of being used to fabricate a fenestration product or exterior door. Field fabricated does not include site assembled frame components that were manufactured elsewhere with the intention of being assembled on site (such as knocked down products, sunspace kits and curtainwalls).

SKYLIGHT is glazing having a slope less than 60 degrees from the horizontal with conditioned space below, except for purposes of complying with Section 151(f), where a skylight is glazing having a slope not exceeding 4.76 degrees (1:12) from the horizontal.

SKYLIGHT AREA is the area of the surface of a skylight, plus the area of the frame, sash, and mullions.

SOLAR HEAT GAIN COEFFICIENT (SHGC) is the ratio of the solar heat gain entering the space through the fenestration area to the incident solar radiation. Solar heat gain includes directly transmitted solar heat and absorbed solar radiation, which is then reradiated, conducted, or convected into the space.

WINDOW is glazing that is not a skylight.

WINDOW AREA is the area of the surface of a window, plus the area of the frame, sash, and mullions.

Compliance/
Plan Check

Fenestration Products and
Exterior Doors

The National Fenestration Rating Council (NFRC) publishes the Certified Product Directory, containing NFRC certified U-Values and SHGC for thousands of products. The directory can be purchased by contacting:

NFRC
1300 Spring Street, Suite 120
Silver Springs, MD 20901
(301) 589-6372

Compliance calculations can use actual product data or default SHGC and U-values. Field-fabricated products should use default values.

Construction

Fenestration Products and
Exterior Doors

FIELD-FABRICATED PRODUCTS

Field-fabricated products are required to limit air leakage by weatherstripping, caulking, or some other appropriate means as described below in "Joints and Other Openings."

EXTERIOR DOORS

Exterior doors are required to meet the following requirements of the standards:

- Manufactured exterior doors must be certified as meeting an air leakage rate of 0.3 cfm/ft² of door area.
- Comply with the requirements of Section 117, as described below in "Joints and Other Openings."
- Any door with more than one half of the door area consisting of glass is a fenestration product.

MANUFACTURED FENESTRATION

Fenestration products must have a temporary label indicating the U-value and SHGC based on either the *CEC Default* or *NFRC Rating Procedures.* Only field-fabricated products are not required to be labeled.

Each manufactured fenestration product must:

- have a temporary label, not to be removed before inspection by the enforcement agency, listing the certified U-value, SHGC, and certifying that the requirements of air infiltration requirements of Section 116 are met (see Figure 2-7); and
- have a permanent label listing, the U-value, certifying organization, and rating procedures or a label to allow tracking back to the original certification information on file with the certifying organization.

Only field-fabricated products, as defined above, are exempt from the labeling requirements.

The U-value and SHGC values on the window label must be less than, or equal to, the values on the CF-1R. The CF-6R must be completed by the installer.

Inspection

Fenestration Products and
Exterior Doors

Fenestration and shading products play a major role in not only the building's energy use but can affect the operation of the HVAC system. Check the orientation and size of all installed fenestration including windows, doors with over one-half glass, and glazed skylights. Any increase in fenestration areas or changes in fenestration orientation can affect the energy compliance of a building and must be approved by the building plan checker. Homes in subdivisions are sometimes designed to allow for rotation in all four cardinal directions. However, this information needs to be verified on the CF-1R.

Check the CF-1R for any overhang requirement and refer to the plans for required dimensions.

Check the CF-6R completed by the installer and compare it to the temporary label. All fenestration products must have a temporary label indicating the U-value, Solar Heat Gain Coefficient (SHGC) and certification of air infiltration requirements (only field-fabricated products, as defined above, are exempt from labeling requirements).

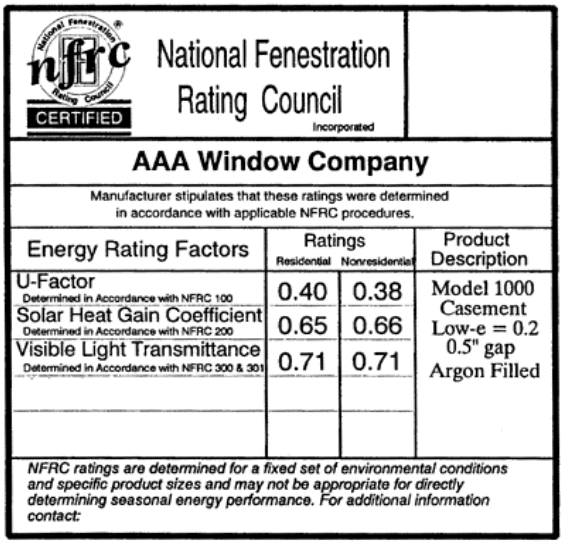

National Fenestration Rating Council Incorporated

CERTIFIED

AAA Window Company

Manufacturer stipulates that these ratings were determined in accordance with applicable NFRC procedures.

Energy Rating Factors	Ratings Residential	Ratings Nonresidential	Product Description
U-Factor Determined in Accordance with NFRC 100	0.40	0.38	Model 1000 Casement Low-e = 0.2 0.5" gap Argon Filled
Solar Heat Gain Coefficient Determined in Accordance with NFRC 200	0.65	0.66	
Visible Light Transmittance Determined in Accordance with NFRC 300 & 301	0.71	0.71	

NFRC ratings are determined for a fixed set of environmental conditions and specific product sizes and may not be appropriate for directly determining seasonal energy performance. For additional information contact:

Figure 2-7: Temporary Label

The label may list two different sizes, "AA" (for residential) and "BB" (for nonresidential).

Values shown on the labels should be equal or lower than the values on the CF-1R, however, these values are often an average of the U-values and SHGCs that are to be installed. Compare the installed products to the CF-6R completed by the installer. The installer is responsible for ensuring compliance with the requirements of the CF-1R.

Examples

Fenestration Products and Exterior Doors

Can I use single-pane windows or skylights?

New buildings or additions using a *performance* approach (computer) may be able to achieve compliance with single-pane glass. How easy or difficult it is to make up the lost energy efficiency will depend on the climate zone and building design.

New buildings, additions or alterations showing compliance using *prescriptive* standards are limited to a maximum U-value for fenestration products which prevents the use of single pane glass.

My home will have a combination of fixed and operable windows. In determining the appropriate U-value for fenestration products, can I assume all windows are "fixed" in my compliance calculations?

You may assume the more conservative of the default values listed for fixed and operable windows. (Operable windows generally have a more conservative default value but this is not always the case with site built fenestration products.) Alternatively, you may calculate a weighted average U-value based on the actual condition of the windows. NOTE: Typical windows with a fixed portion and an operable portion are *operable*.

When modeling/accounting for greenhouse windows, which compliance approach allows the use of the "assumed" U-value of 0.75 for skylights and greenhouse windows? Do I use the entire glass area?

In prescriptive *additions* and *alterations* only, you can use a 0.75 U-value for dual-glazed greenhouse windows or skylights with any compliance method. In new construction, the actual U-value of fenestration products is used for compliance documentation/calculations. For greenhouse windows, the area of glass is considered to be the area of the rough opening.

When windows are labeled with a default value, are there any special requirements that apply to the label?

There are two criteria that apply to fenestration products labeled with default values. First, the *Administrative Regulations* (Section 10-111) require that the words "CEC Default U-Value" and "CEC Default SHGC" appear on the temporary label *in front of* or *before* the U-value or SHGC (i.e., not in a footnote). Second, the U-value and SHGC for the specific product must be listed. If multiple values are listed on the label, the manufacturer must identify, in a permanent manner, the appropriate value for the labeled product. Marking the correct value may be done in the *following ways only*:

- Circle the correct U-value and SHGC (*permanent ink*).
- Black out all values *except* the correct U-value and SHGC (*permanent ink*).
- Make a hole punch next to the appropriate values.

What U-value do I use for glass block? Does it need a label?

The default U-value for an unframed product is 0.57 (if the product is operable, the U-value is 0.60); for a product with metal framing the default U-value is 0.72 (if the product is operable, the U-value is 0.87).

A product label is required.

What solar heat gain coefficient do I use for glass block?

Either (1) use a default value from Table No. 1-E, for dual glazing with the appropriate frame type (for no frame use "non-metal"), or (2) obtain the manufacturer's published SHGC for the product.

Is there a default U-value for the glass in sunrooms?

For the horizontal portion of the sunroom, use the U-value for skylights. For the vertical portion, use the U-values for either fixed, operable or patio doors, as appropriate. Use either default or NFRC-rated U-values. As a simplifying alternative, the manufacturer may label the entire sunroom with the highest U-value of any of the individual fenestration types within the assembly.

How are French doors treated in compliance documentation, for example the U-value and dimensions?

French doors are fenestration products and are covered by the National Fenestration Rating Council (NFRC) Rating and Certification Program. You may use either an NFRC-rated U-value or a default (patio doors) U-value. The fenestration area for compliance documentation is the entire rough opening of the door (not just the glass area).

How can I determine a solar heat gain coefficient for French doors?

The solar heat gain coefficient (SHGC) for French doors may be determined in one of two ways:

1. Refer to Table 1-E. The SHGCs in this table have been pre-calculated based upon glazing type, framing type, and interior shade type.
2. Calculate the SHGC using a Solar Heat Gain Coefficient (SHGC) Worksheet (Form S). The Form S calculation allows the user to account for French doors with dividers and/or more than 50 percent glazing area.

As a manufacturer of fenestration products, I place a temporary label with the air infiltration rates on my products (Section 116(a)). Can you clarify which products must be tested and certified?

Each product line must be tested and certified for air infiltration rates. Features such as weather seal, frame design, operator type, and direction of operation all effect air leakage. Every product must have a temporary label certifying that the air infiltration requirements are met. This temporary label may be combined with the temporary U-value label.

Is a custom window "field-fabricated" for purposes of meeting air infiltration requirements?

No. Most custom windows are manufactured and delivered to the site either completely assembled or knocked down, which means they are a manufactured product. A window is considered field fabricated when the windows are assembled at the building site from the various elements *which are not sold together as a fenestration product* (i.e., glazing, framing and weatherstripping). As stated in the definition, "field fabricated does not include site assembled frame components that were manufactured elsewhere with the intention of being assembled on site (such as knocked down products, sunspace kits and curtainwalls)."

Energy Code

Joints and Other Openings (Section 117(a))

(a) Joints and other openings in the building envelope that are potential sources of air leakage shall be caulked, gasketed, weatherstripped, or otherwise sealed to limit infiltration and exfiltration.

Compliance/
Plan Check

Joints and Other Openings

Air leakage through cracks around windows, doors, walls, roofs and floors generally accounts for about one-third of the energy used for home heating and cooling. The standards contain a number of requirements to control infiltration and exfiltration.

Construction

Joints and Other Openings

The following openings in the building envelope must be caulked, gasketed, weather-stripped or otherwise sealed (see Figure 2-8):

- exterior joints around window and door frames, including doors between the house and garage, between interior HVAC closets and unconditioned space, between attic access and conditioned space, and between wall sole plates, floors, exterior panels and all siding materials;
- openings for plumbing, electricity, and gas lines in exterior walls, ceilings and floors;
- openings in the attic floor (such as where ceiling panels meet interior and exterior walls and masonry fireplaces); and
- all other such openings in the building envelope.

Alternative approved techniques may be used to meet the mandatory caulking requirements for exterior walls. These include, but are not limited to:

- continuous stucco
- caulking and taping all joints between wall components (e.g., between slats in wood slat walls)
- building wraps
- rigid wall insulation

Inspection

Joints and Other Openings

Openings in exterior walls are common to accommodate gas, plumbing or electrical lines. Any openings in the building envelope separating conditioned space from unconditioned space must be sealed to prevent air leakage. A proper seal can be verified by checking that the opening is continuously caulked all around and that no light can be seen around the opening. Caulking must also be applied between the bottom plate of the wall framing and the subfloor (see Figure 2-8).

Weather-stripping is required on all operable windows and doors. This includes doors between the garage and the house, between interior HVAC closets and conditioned space, and between the attic access and conditioned space.

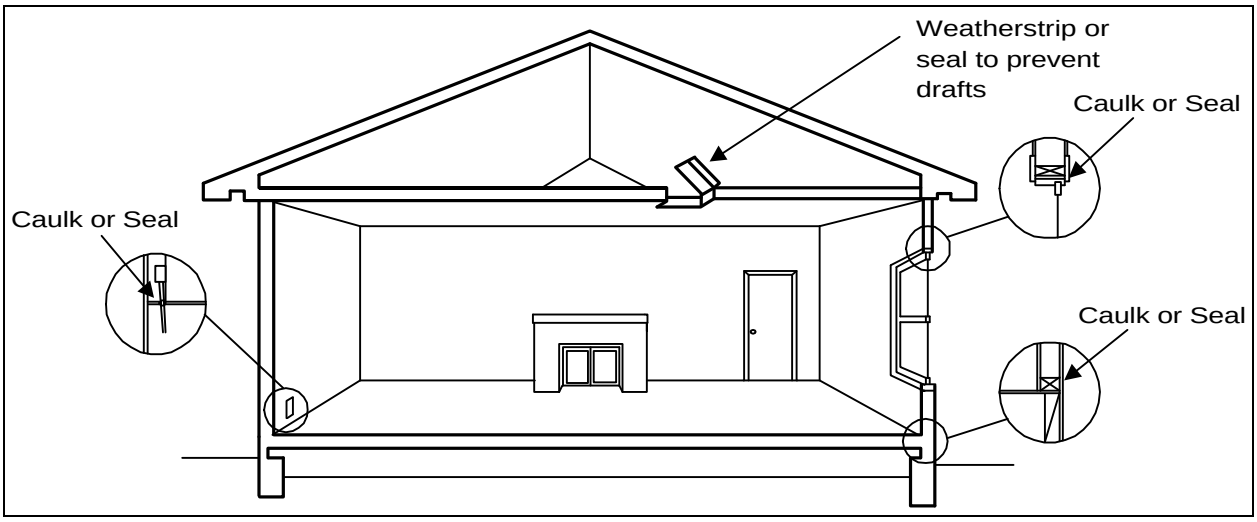

Figure 2-8: Caulking and Weatherstripping

Energy Code

Vapor Barrier (Sections 150(g), 101(b))

(g) ***Vapor Barriers.*** *In Climate Zones 14 and 16 as shown in Figure No. 1-A, a vapor barrier shall be installed on the conditioned space side of all insulation in all exterior walls, unvented attics, and unvented crawl spaces to protect insulation from condensation.*

If a building has a controlled ventilation crawl space (CVC), a vapor barrier shall be placed over the earth floor of the crawl space to reduce moisture entry and protect insulation from condensation, as specified in the ALTERNATIVE to Section 150(d).

Section 101(b):

VAPOR BARRIER is a material that has a permeance of one perm or less and that provides resistance to the transmission of water vapor.

Introduction

Vapor Barrier/Vapor Retarder

A vapor barrier or retarder is a special covering over framing and insulation that protects the wall assembly components from possible damage due to moisture buildup. When moisture gravitates from inside the house toward the outdoors, if it condenses against the exterior wall and in the insulation, the insulation loses its effectiveness.

Construction

Vapor Barrier/Vapor Retarder

In Climate Zones 14 and 16 only, a continuous vapor barrier, lapped or joint sealed, must be installed on the conditioned space side of all insulation in all exterior walls, on the floors of unvented attics, and on floors over unvented crawl spaces to protect insulation from condensation. If a building has a controlled ventilation crawl space (see Chapter 7, Part 7.7), a vapor barrier shall be placed over the earth floor of the crawl space to reduce moisture entry and protect insulation from condensation.

The standards define a vapor barrier as material with a permeance of one perm or less, a measure of resistance to the transmission of water vapors. A perm is equal to one grain of water vapor transmitted per square foot per hour per inch of mercury pressure difference.

Products such as a continuous polyethylene sheet or wall board with foil backing may meet this requirement, as well as any other product that, according to the appropriate testing procedure, meets the vapor barrier permeance rating of one perm or less. Kraft paper backing on batt insulation may qualify if the paper backing meets the vapor barrier permeance rating, and is properly installed. For proper installation, the Kraft paper should be installed per manufacturer instructions.-

See also Special Infiltration Barrier below.

Inspection

Vapor Barrier/Vapor Retarder

If a building is being constructed in climate zone 14 or 16, a continuous vapor barrier is required. One of several products should be indicated on the plans to comply with this requirement. Acceptable products include:

- Continuous polyethylene sheet,
- Wall board with foil backing,
- Kraft facing, or
- Any product that has appropriate test results verifying the permeance of one perm or less.

Kraft paper backing on batt insulation, under certain circumstances, may be used to meet the continuous vapor barrier requirement. Specifically, the paper backing must meet the vapor barrier permeance rating and the product must be installed properly.

For proper installation of batt insulation with Kraft paper backing:

1. Kraft paper should *not* be stapled to the sides of framing members; instead, the Kraft paper tabs on each side of the insulation batt must be fastened to the face of the conditioned side of the framing member, and

2. At the ends of the insulated cavity, the Kraft paper must overlap the framing members to create a continuous barrier at the wall cavity.

Energy Code

Special Infiltration Barrier (Section 150(f), 151(f)5.)

Infiltration Barrier. If an infiltration barrier is installed to meet the requirements of Section 151, it must have an air porosity of less than 5 ft³ per hour per square foot per inch of mercury pressure difference when tested in accordance with the requirements of ASTM E283-91. If a vapor barrier functions as an infiltration barrier it shall be located on the conditioned side of the exterior framing.

Section 151(f)5.:

Continuous Infiltration Barrier. Continuous infiltration barriers required in Tables No. 1-Z1 through 1-Z16 shall be installed over the inside face of framing in ceilings and over the inside or outside face of framing in exterior walls. Where ceilings are plank and beam construction exposed to the conditioned space, the barrier shall be placed on top of the planking, and the wall/ceiling joints shall be sealed with caulking or sealant. All openings in the building envelope for plumbing, electrical conduits and boxes, gas lines and valves, luminaires, ducts, flues and other elements which penetrate the infiltration barrier, shall be sealed with permanent tape or sealant.

Compliance/ Plan Check

Special Infiltration Barrier

Special or continuous infiltration barriers are required only for compliance with Alternative Component Package B in Climate Zones 1, 14, 15 and 16.

There is a new compliance option for "air-retarding wraps" that allows an energy credit. See Chapter 8, Part 8.14 for installation criteria.

Construction

Special Infiltration Barrier

If the compliance approach chosen requires a continuous infiltration barrier on ceilings and walls, that infiltration barrier must have an *air porosity* of less than 5 cubic feet per hour per square foot per inch of mercury pressure difference when tested in accordance with the requirements of the American Society of Testing and Materials ASTM E283-84.

If an infiltration barrier also functions as a vapor barrier (in Climate Zones 14 and 16), note that the material must meet the requirements of both a vapor barrier and infiltration barrier. The product shall be located on the inside of the wall framing or another approved location consistent with the testing of the product. (See also Chapter 8 for air-retarding wraps.)

Inspection

Special Infiltration Barrier

Special or continuous infiltration barriers are required only for compliance with Alternative Component Package B in Climate Zones 1, 14, 15 and 16 and will be indicated on the CF-1R and on the plans.

When required, the infiltration barrier must:

- be installed and ceilings and walls, and
- have an *air porosity* of less than 5 cubic feet per hour per square foot per inch of mercury pressure difference when tested in accordance with the requirements of the American Society of Testing and Materials ASTM E283-84.

If an infiltration barrier also functions as a vapor barrier (in Climate Zones 14 and 16), the material must meet the requirements of both a vapor barrier and infiltration barrier. The product shall be located on the inside of the wall framing or another approved location consistent with the testing of the product.

Energy Code

Fireplaces, Decorative Gas Appliances and Gas Logs (Section 150(e))

1. *If a masonry or factory-built fireplace is installed, it shall have the following:*

   A. *Closable metal or glass doors covering the entire opening of the firebox;*

   B. *A combustion air intake to draw air from the outside of the building directly into the firebox, which is at least 6-square inches in area and is equipped with a readily accessible, operable, and tight-fitting damper or combustion air control device; and*

   EXCEPTION to Section 150(e)1.B.: An outside combustion air intake is not required if the fireplace will be installed over concrete slab flooring and the fireplace will not be located on an exterior wall.

   C. *A flue damper with a readily accessible control.*

   EXCEPTION to Section 150(e)1.C.: When a gas log, log lighter, or decorative gas appliance is installed in a fireplace, the flue damper shall be blocked open if required by the manufacturer's installation instructions or the California Mechanical Code.

2. *Continuous burning pilot lights and the use of indoor air for cooling a firebox jacket, when that indoor air is vented to the outside of the building, are prohibited.*

Construction

Fireplaces, Decorative Gas Appliances and Gas Logs

Because conditioned air can escape through a fireplace chimney, fireplace efficiency can be greatly improved through proper air control which the standards require in the form of specific air control measures.

Installation of factory-built or masonry fireplaces (see Figure 2-9) must include:

- Doors covering the entire opening of the firebox that can be closed when the fire is burning.
- A combustion air intake that is at least 6 square inches equipped with a readily accessible, operable and tight-fitting damper.
- A flue damper with a readily accessible control.

These requirements do not apply to decorative gas appliances.

Two prohibitions for fireplaces, decorative gas appliances and gas logs are:

- continuously burning pilot lights in fireplaces, decorative gas appliances and gas logs; and
- indoor air vented to the outside to cool a firebox jacket.

NOTE:

If a gas log, log lighter, or decorative gas appliance is installed in a fireplace, the flue damper shall be blocked open per manufacturer's installation instructions or the Uniform Mechanical Code.

Inspection

Fireplaces, Decorative Gas Appliances and Gas Logs

Fireplace requirements:

- closable metal or glass doors;
- combustion air intake (six square inch) for all fireplaces over a raised floor;
- combustion air intake (six square inch) for all fireplaces on exterior walls of slab on grade floors (NOTE: The UMC requires outside combustion air for all buildings, see note above);

readily accessible flue damper control;

- no continuously burning pilot light; and
- no use of indoor air to cool firebox jacket.

NOTE:

When a gas log, log lighter or decorative gas appliance is installed in a fireplace, the flue damper shall be blocked open to the minimum amount required by the manufacturer's installation instructions or the Uniform Mechanical Code.

Decorative gas appliance requirements:

- no continuously burning pilot light; and
- no use of indoor air to cool firebox jacket

Gas log requirement:

- no continuously burning pilot light.

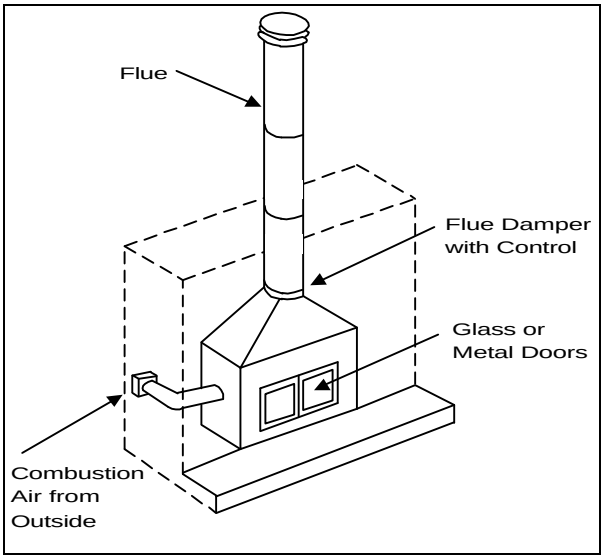

Figure 2-9: Fireplace Installation

Examples

Fireplaces, Decorative Gas Appliances and Gas Logs

Are closable glass or metal doors required for decorative gas appliances?

No. The only requirement of standards Section 150(e) that applies to decorative gas appliances is the prohibition on continuously burning pilot lights (Section 150(e)2). If there is a question about whether a device is a fireplace, which requires glass doors, the distinction is that a fireplace has a hearth, chamber or other place in which a solid fuel fire or a decorative gas log set may be burned, while a decorative gas appliance is for visual effect only and merely simulates a fire in a fireplace (Section 101.)

Although decorative gas appliances with continuously burning pilot lights are prohibited by the standards (Section 150(e)2), are they legal to sell in California?

Yes. These appliances can be sold for installation in existing residential buildings, hotels/motels, high-rise residential buildings and nonresidential buildings.

If I want to have a gas log or some other device in the fireplace of my home, can I block open the damper? Can it have a standing pilot light?

Section 150(e)1 (which contains the requirements for fireplaces, decorative gas appliances, and gas logs), allows the flue damper to be blocked open as required by either the manufacturer's instructions or the *Uniform Mechanical Code*. Continuously burning pilot lights in these appliances are prohibited by Section 150(e)2.

Section 150(e)2 of the standards states that no fireplace, decorative gas appliance or gas log can be installed if it has a continuously burning pilot light. The Uniform Mechanical Code requires all gas appliances installed in California have a manually operated shut-off valve, accessible to the inhabited space. Does this shut-off valve meet the intent of this section?

Not if the pilot light must be *manually extinguished* when the appliance is off. A unit that meets the intent of this section is one with a pilot light that *cannot* stay on when the unit is off.

Do decorative gas appliances need glass or metal doors?

As defined in Section 101 of the standards, decorative gas appliances do not need doors. The door requirement applies to masonry or factory-built fireplaces only (Section 150(e)1). NOTE: If a decorative gas appliance is installed *inside a fireplace*, the fireplace needs doors. Consult the manufacturer of the decorative gas appliance regarding combustion air requirements.

2.4 SPACE CONDITIONING, WATER HEATING AND PLUMBING SYSTEM MEASURES

The design and installation of a building's space-conditioning, water-heating and plumbing systems have a significant impact on the building's energy consumption. In view of this, the standards set a number of minimum requirements for these systems. The specific areas covered by the regulations include:

- HVAC equipment efficiency and certification,
- HVAC equipment controls,
- HVAC equipment sizing,
- duct construction,
- water heater and hot water pipe insulation,
- water heater and plumbing equipment efficiency and certification, and
- pool and spa heater efficiency.

The following section discusses each of the relevant mandatory measures in detail.

Energy Code

Systems and Equipment Certification, Appliance Efficiency Regulations (Sections 110-111)

Section 110: Systems and Equipment – General.

Sections 111 through 119 establish requirements for the manufacture, construction, and installation of certain systems, equipment, and building components that are installed in buildings regulated by Title 24, Part 6. Systems, equipment, and building components listed below may be installed only if:

(a) The manufacturer has certified that the system, equipment, or building component complies with the applicable manufacture provisions of Sections 111 through 119; and

(b) The system, equipment, or building component complies with the applicable installation provisions of Sections 111 through 119.

No system, equipment, or building component covered by the provisions of Section 111 through Section 119 that is not certified or that fails to comply with the applicable installation requirements may be installed in a building regulated by Title 24, Part 6.

The systems, equipment, and building components covered are:

Appliances regulated by the Appliance Efficiency Regulations. (Section 111)
Other space conditioning equipment. (Section 112)
Other service water heating systems and equipment. (Section 113)
Pool and spa heating systems and equipment. (Section 114)
Gas appliances. (Section 115)
Doors, windows, and fenestration products. (Section 116)
Joints and other openings. (Section 117)
Insulation. (Section 118)
Lighting control devices. (Section 119)

Section 111. Mandatory Requirements for Appliances Regulated by the Appliance Efficiency Regulations.

Any appliance for which there is a California standard established in the Appliance Efficiency Regulations may be installed only if the manufacturer has certified to the Commission, as specified in those regulations, that the appliance complies with the applicable standard for that appliance. See Appendix 1-A for availability of directories of certified appliances.

Only HVAC, water heating and plumbing system equipment certified by manufacturers as complying with applicable *Appliance Efficiency Regulations* at the time of manufacture may be installed. Equipment subject to certification may not be sold in California unless it is certified. This includes the following equipment types:

- Room air conditioners
- Room air conditioning heat pumps
- Central air conditioners with a cooling capacity of less than 135,000 Btu/hr
- Central air conditioning heat pumps
- Gas-fired central furnaces
- Gas-fired boilers
- Gas-fired furnaces
- Gas-fired floor furnaces
- Gas-fired room heaters
- Gas-fired duct furnaces
- Gas-fired unit heaters
- Gas water heaters
- Heat pump water heaters
- Electric storage water heaters
- Oil-fired water heaters
- Shower heads and faucets

A summary of appliance efficiency regulations for gas-fired space heaters, air conditioners and heat pumps is given under the definition of the efficiency descriptors in Appendix G, *Glossary*, under *AFUE, SEER* and *HSPF.*

The standards do *not* require certification for:

- Infrared heaters
- Nonstorage-type electric water heaters.
- Electric resistance heaters
- Oil-fired furnaces (some are voluntarily listed with certified gas-fired furnaces)

There are several sources of certification information for appliances (see Chapter 1, Part 1.6).

Federal appliance efficiency standards require that:

1. Gas fan type central furnaces with an input rate less than 225,000 Btu/hr and manufactured on or after January 1, 1992, must be certified by the manufacturer to have an Annual Fuel Utilization Efficiency (AFUE) of 78 percent or greater.

2. Boilers with an input rate less than 300,000 Btu/hr and manufactured on or after January 1, 1992, must be certified by the manufacturer to have an AFUE of 75 percent or greater for gas steam type boilers and 80 percent or greater for all other boilers.

3. Split system air source air conditioners or heat pumps with an output rate less than 65,000 Btu/hr and manufactured on or after January 1, 1992, must be certified by the manufacturer to have a Seasonal Energy Efficiency Ratio (SEER) of 10.0 or greater.

4. Single packaged air source air conditioners or heat pumps with an output rate less than 65,000 Btu/hr and manufactured on or after January 1, 1993, must be certified by the manufacturer to have an SEER of 9.7 or greater.

California efficiency requirements for larger capacity equipment than covered above are listed in Section 112 of the standards.

When an appliance is of a size or type not regulated by the Appliance Efficiency Regulations, it may be regulated by the standards (Section 112). Efficiency information for appliances not subject to certification can be obtained from the manufacturer, as listing such appliances with a certifying organizations is voluntary.

If any equipment does not meet the federal appliance efficiency standards, it may not be sold in California. Any equipment covered by the *Appliance Efficiency Regulations* and sold in California must have the date of manufacture permanently displayed in an accessible place on that equipment. This date is frequently included as part of the serial number.

NOTE:

Equipment manufactured before the effective date of a new standard may be sold and installed in California indefinitely, as long as a performance approach demonstrates compliance of the building (see Chapter 4) using the lower efficiency appliances.

Construction

Systems and Equipment

The person who signs off on the Installation Certificate (CF-6R) is required to certify that the actual equipment installed meets or exceeds the requirements of the *Appliance Efficiency Regulations* and that the equipment is equivalent to or more efficient than the equipment described on the Certificate of Compliance attached to the plans.

WATER HEATING

The number and types of water-heater systems installed must correspond to the approved CF-1R. The location of the water heater, adding a recirculating system, a hot water-recovery system are all factors of the distribution system and plays a significant role in water heating compliance. The distribution system must correspond to plan specifications.

The installation criteria for water heating distribution systems are described in Chapter 5, Table 5-1c.

FAUCETS AND SHOWER HEADS

Faucets and shower heads are limited by a federal standard to 2.5 gallons per minute. If equipped with a flow restrictor, it must be mechanically retained which means it requires eight pounds or more of pulling force to remove.

NOTE:

A reduced flow rate saves in two ways: (1) water-heating energy makes up about one-quarter of all energy in residences, so less water means less hot water; and (2) a 10 percent cut in water use means $100,000 in electricity savings from reduced pumping costs theoretically for one water district.

Inspection

Systems and Equipment

HEATING & AIR-CONDITIONING SYSTEMS

Verify the make and model number of the installed unit matches that listed on the Installation Certificate (CF-6R). For furnaces, the make and model number can be verified by removing the front plate and checking the nameplate data. For cooling units, the nameplate data is typically located on the unit's case (cowling).

The person who signs off on the Installation Certificate (CF-6R) is certifying that the actual equipment installed meets or exceeds the requirements of the *Appliance Efficiency Regulations* and that it is equivalent to, or more efficient than, the equipment described on the Certificate of Compliance attached to the plans. Compare the CF-6R data to the CF-1R data shown on the plans.

The equipment complies if, compared to what is shown on the CF-1R, it is of the same equipment type, equal or higher efficiency, same distribution type and location, has equal or higher duct (or piping) R-value and has a heating capacity greater than the heating load (to meet UBC requirements).

For cooling equipment sizing and equipment selection, the Mandatory Measures requirements for sizing and equipment selection should have been followed.

WATER HEATING

Check that the number and types of water-heater systems installed, as indicated on the CF-6R, and check to see that this corresponds to the approved CF-1R. The distribution system is also significant and must correspond to plan specifications. For example:

- If the plans indicate the presence of a hot water recovery system, it must be installed.
- If a recirculation system is installed, verify that it was accounted for in the compliance documentation (CF-1R) and check for any required controls (e.g., demand pump, timer).

- If a point of use credit is specified, the water heater must be no further than eight feet from all hot water outlets (excluding washing machines).

See Chapter 5, Part 5.1, for a summary of the different distribution system types and whether each one is a credit or a penalty as compared with the standard distribution system.

Verify that the make and model number of the installed water-heater unit matchthose listed on the Installation Certificate (CF-6R).

If the water heater has an energy factor (EF) of less than 0.58, an R-12 water-heater blanket is required (internal insulation cannot be used to satisfy this mandatory requirement). For water heaters with 0.58 EF or higher or large storage (typically commercial size) water heaters whose rated input is greater than 75,000 Btuh, that are not rated using an energy factor, no insulation blanket is required. The blanket should be securely attached around the water heater. The top of the water heater should not be insulated and a cutout in the blanket should be provided for combustion air intake.

FAUCETS AND SHOWER HEADS

Faucets and shower heads are limited by a federal standard to 2.5 gallons-per-minute. If equipped with a flow restrictor, it must be mechanically retained which means it requires eight pounds or more of pulling force to remove.

Energy Code

Space Conditioning Sizing (Section 150(h))

(h) ***Space Conditioning Sizing***

1. *Building design heat loss rate and design heat gain rate, shall be determined using a method based on any one of the following:*

   A. *The American Society of Heating, Refrigeration, and Air-Conditioning Engineers (ASHRAE) Handbook and Product Directory, Equipment Volume (1996), HVAC Applications Volume (1995), and Fundamentals Volume (1993), or*

   B. *The Sheet Metal Air Conditioning Contractors National Association (SMACNA) Installation Standards for Residential Heating and Air Conditioning Systems, or*

   C. *The Air Conditioning Contractors Of America (ACCA) Manual J.*

   The design heat loss rate and design heat gain rate are two of the criteria that shall be used for equipment sizing and selection.

   NOTE to Section 150(h)1.: Heating Systems must meet the minimum heating capacity required by UBC Section 310.11. The furnace output capacity and other specifications are published in the Commission's directory of certified equipment or other directories approved by the Commission.

2. *Design Conditions.*

   For the purpose of sizing the space conditioning (HVAC) system, the indoor design temperatures shall be 70 degrees Fahrenheit for heating and 78 degrees for cooling. The outdoor design temperatures for heating shall be no lower than the Winter Median of Extremes column. The outdoor design temperatures for cooling shall be from the 0.5 percent Summer Design Dry Bulb and the 0.5 percent Wet Bulb columns for cooling, based on percent-of-year in ASHRAE publication SPCDX: Climate Data for Region X, Arizona, California, Hawaii, and Nevada, 1982, incorporated herein by reference.

Compliance/ Plan Check

Space Conditioning Sizing

The sizing of residential heating systems is regulated by the *Uniform Building Code (UBC)* and the standards. The UBC requires that the heating system be capable of maintaining a temperature of 70º F three feet above the floor throughout the conditioned space of the building.

Indoor Design Temperatures for Sizing Calculations

Heating	**Cooling**
70º F	78º F

If the actual city location for a project is not included in the ASHRAE listing, or if the data given for a particular city does not match the conditions at the actual site as well as that given for another nearby city, consult the local building department for guidance.

Design conditions for 641 California locations, from the ASHRAE publication *Climatic Data For Region X: Arizona, California, Hawaii, Nevada by ASHRAE* (Fifth Edition, May 1982, supplement November 1994), are contained in Appendix C.

The load calculations must be submitted with compliance documentation.

Construction

Space Conditioning Sizing

The mechanical contractor who installs the equipment, completes and signs the Installation Certificate (CF-6R) and is ultimately responsible for proper sizing and equipment selection.

The calculated heat gain and heat loss rates (load calculations) are just two of the criteria for sizing and selecting equipment. The load calculations may be prepared by: (1) the documentation author and submitted to the mechanical contractor, (2) a mechanical engineer, or (3) the mechanical contractor who is installing the equipment.

The load calculations do not need to be submitted with compliance documentation unless requested by the building department.

Energy Code

Setback Thermostats
Section 150(i))

(i) ***Setback Thermostats.*** *All heating and/or cooling systems other than wood stoves shall have an automatic thermostat with a clock mechanism or other setback mechanism approved by the Executive Director that shuts the system off during periods of non-use and that allows the building occupant to automatically set back the thermostat set points for at least 2 periods within 24 hours.*

EXCEPTION to Section 150(i): Gravity gas wall heaters, gravity floor heaters, gravity room heaters, non-central electric heaters, room air conditioners, and room air conditioner heat pumps need not comply with this requirement. Additionally, room air conditioner heat pumps need not comply with Section 112(b). The resulting increase in energy use due to elimination of the setback thermostat shall be factored into the compliance analysis in accordance with a method prescribed by the Executive Director.

Compliance/
Plan Check

Setback Thermostats

All heating and/or cooling systems must have an automatic setback thermostat with a clock mechanism that shuts the system off during periods of non-use and that allows the building occupant to automatically set back the thermostat set points for at least two periods within 24 hours.

An exception applies only when computer performance compliance with a “nonsetback” control modeled on the listed noncentral space-conditioning systems.

If more than one piece of heating equipment is installed in a residence or dwelling unit, the setback requirement may be met either by controlling all heating units by one setback thermostat or by controlling each unit with a separate setback thermostat. Separate heating equipment units may be provided with a separate on/off control capable of overriding the setback thermostat if desired.

Unless the elimination of the setback thermostat is factored into the compliance analysis for the following systems, the setback thermostat must be installed *(compliance with a prescriptive package always requires a setback thermostat):*

- Non-central electric heaters
- Room air conditioners
- Room air conditioner heat pumps
- Gravity gas wall heaters
- Gravity floor heaters
- Gravity room heaters
- Room air conditioners

Construction

Setback Thermostats

Automatic setback thermostats add both comfort and convenience to a home. Occupants can wake up to a warm house in the winter and come home

to a cool house in the summer without using unnecessary energy.

All heating and/or cooling systems must have an automatic setback thermostat with a clock mechanism that shuts the system off during periods of non-use and that allows the building occupant to automatically set back the thermostat set points for at least two periods within 24 hours.

The only exception is if the HVAC system on the CF-1R shows the thermostat type as "non-setback" for a building using computer performance compliance. This exception is not allowed for the alternative component packages because this approach cannot factor into the compliance the lack of setback capabilities. The exception also only applies to non-central systems as identified above.

Inspection

Setback Thermostats

Check the CF-1R for automatic setback thermostat requirements. A setback thermostat is a mandatory for central systems. The exception is twofold for non-central systems: (1) the building complied using a computer performance approach with a nonsetback thermostat; and (2) the system is one of the following non-central types:

- Non-central electric heaters
- Room air conditioners
- Room air conditioner heat pumps
- Gravity gas wall heaters
- Gravity floor heaters
- Gravity room heaters
- Room air conditioners

This exception is not allowed for alternative component packages because this approach cannot factor into the compliance the lack of setback capabilities.

Setback is typically achieved with a timeclock on the thermostat or with a digital readout.

Examples

Setback Thermostats

Am I exempt from the requirement for a setback thermostat if I have a gravity wall heater or any of the equipment types listed in the exception to Section 150(i)?

Exemption from the requirement depends on the compliance approach you are using. The latter part of the exception indicates that "the resulting increase in energy use due to the elimination of the setback thermostat shall be factored into the compliance analysis." The only compliance approach which can model this condition is the computer performance compliance approach. To be exempt from the setback thermostat requirement, the building/space must be modeled with "non-setback." Any time the alternative component packages are used for compliance, a setback thermostat is required, regardless of the type of heating/cooling system (except wood stoves).

Energy Code

Heat Pump Controls
(Section 112(b))

(b) ***Controls for Heat Pumps with Supplementary Electric Resistance Heaters****. Heat pumps with supplementary electric resistance heaters shall have controls:*

1. *That prevent supplementary heater operation when the heating load can be met by the heat pump alone; and*

2. *In which the cut-on temperature for compression heating is higher than the cut-on temperature for supplementary heating, and the cut-off temperature for compression heating is higher than the cut-off temperature for supplementary heating.*

EXCEPTION to Section 112(b): The controls may allow supplementary heater operation during:

I. *Defrost; and*

II. *Transient periods such as start-ups and following room thermostat setpoint advance, if the controls provide preferential rate control, intelligent recovery, staging, ramping, or another control mechanism designed to preclude the unnecessary operation of supplementary heating.*

Construction

Heat Pump Controls

Any heat pump with supplementary electric resistance heating must have controls that have two capabilities to limit the electric resistance heating. The first capability of the control is to set the cut-on and cut-off temperatures for compression and supplementary heating at different levels.

For example, if the heat pump begins heating when the inside temperature reaches 68ºF, the electric resistance heating is set to come on if the temperature gets below 65ºF; and the opposite off mode so that if the heat pump shuts off when the temperature reaches 72ºF, the back-up heating shuts off at 68ºF.

The second function of the control prevents the supplementary electric resistance heater from operating when the heat pump alone can meet the heating load, except during defrost.

There is a limited exception to this second function for "smart thermostats" that provide:

- intelligent recovery,
- staging,
- ramping, or
- another control mechanism that prevents the unnecessary operation of supplementary electric resistance heating when the heat pump alone can meet the heating load.

With such controls supplementary heater operation is permitted during defrost and transient periods such as start-ups, and following room thermostat setpoint advance.

NOTE:

Room air conditioner heat pumps are not required to comply with these requirements.

Energy Code

Water Heater Tank Insulation (Section 150(j)1)

A. Storage gas water heaters with an energy factor < 0.58 shall be externally wrapped with insulation having an installed thermal resistance of R-12 or greater.

B. Unfired hot water tanks, such as storage tanks and backup storage tanks for solar water heating systems, shall be externally wrapped with insulation having an installed thermal resistance of R-12 or greater or have internal insulation of at least R-16 and a label on the exterior of the tank showing the insulation R-value.

Compliance/ Plan Check

Water Heater Insulation

Insulation is not a factor in the compliance calculations, but is a mandatory requirement for some units. For storage water heaters with an energy factor of less than 0.58, an R-12 insulation wrap is required. Any unfired tanks (used as a back-up for solar water heating or as storage for a boiler) must either be insulated externally with R-12 or have a label indicating the tank is internally insulated with R-16.

Construction

Water Heater Insulation

Storage water heaters with an efficiency of less than 0.58 energy factor must be wrapped with an R-12 insulation blanket. Internal insulation cannot be substituted for this insulation. Large storage water heaters with a rated input greater than 75,000 Btuh that are not rated with an energy factor (EF) are not required to have an external R-12 insulation blanket.

Unfired tanks used as a back-up for solar water heating, or as storage for a boiler, must either be insulated externally with R-12 or have a label indicating that the tank is internally insulated with R-16. Alternatively, proof that the heat loss of the tank surface, based on an 80ºF water-air temperature difference, is less than 6.5 Btu/hr-ft^2.

Inspection

Water Heater Insulation

In most common situations a water heater blanket is not required. There are only two cases where an R-12 wrap is required:

- *Storage* water heater with an energy factor of less than 0.58.

- *Unfired* water heater without a label specifying R-16 internal insulation.

Energy Code

Pipe Insulation
(Section 150(j)2)

Piping, whether buried or unburied, for recirculating sections of domestic hot water systems, piping from the heating source to the storage tank for an indirect-fired domestic water heating system, cooling system piping below 55 degrees Fahrenheit, and the first five feet of hot and cold water pipes from the storage tank for non-recirculating systems shall be thermally insulated in accordance with Table No. 1-T.

EXCEPTIONS to Section 150(j)2.: The following piping does not have to be thermally insulated: (1) factory-installed piping within space conditioning equipment; and (2) piping that conveys fluids that have a design operating temperature range between 55 degrees and 105 degrees Fahrenheit.

NOTE to Section 150(j)2.: Where the Executive Director approves a water heater calculation method for a particular water heating recirculation system, piping insulation requirements shall be those specified in the approved calculation method.

Compliance/
Plan Check

Pipe Insulation

Pipe insulation is usually a mandatory requirement; however, in some cases credit for piping insulation is given. For more specific information about gaining credit for pipe insulation, see Chapter 5.

TABLE NO. 1-T
PIPE INSULATION REQUIREMENTS
MINIMUM R-VALUE

System	*Pipe Diameter*	
	Less than or equal to 2"	*Greater than 2"*
Domestic Hot Water	*R-4*	*R-6*
Hydronic Heating Supply Lines	*R-4*	*R-6*
Cooling Systems (pipes below 55°F)	*R-3*	*R-4*

Construction

Pipe Insulation

The following piping must be insulated in accordance with Table 1-T above:

- Storage tanks for a non-recirculating system must have pipe insulation on both hot and cold water pipes for a length of five feet. There is no exception for water heater piping in the conditioned space. Insulate the cold water pipe close to the storage tank since the cold water pipe draws heat from the tank and loses some of that heat convectively to the air.
- Recirculating sections of domestic hot water systems (the entire length of piping, whether buried or exposed).
- Indirect fired domestic hot water system piping from the heating source to the storage tank.
- Cooling system piping below 55ºF.

Other installation information:

- No insulation should be installed closer than six inches from the flue. If possible bend the pipe away from the flue, otherwise, it may be necessary to stop pipe insulation short of the storage tank (see *1994 Uniform Mechanical Code*, Section 304, Table 3C).
- All pipe insulation seams should be sealed.
- Installed piping should not be located in supply or return air plenums.
- Hot and cold water piping, when installed in parallel runs should be a minimum of six inches apart.
- If the pipe is interrupted by a wall, the wall insulation can, if it surrounds the pipe as shown in Figure 2-10, be used to meet the mandatory requirements in place of pipe insulation. The full five feet must be insulated.
- If a fire wall interrupts the first five feet of pipe, the insulation may be interrupted at the wall and continued on the other side.

Piping *exempt* from this insulation requirement includes:

- Factory installed piping within space conditioning equipment; and
- Piping that conveys fluids that have a design operating temperature range between 55ºF and 105ºF.

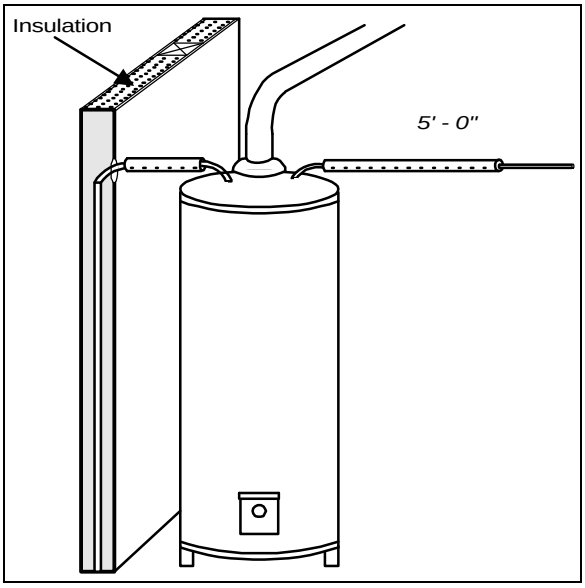

Figure 2-10: Meeting Pipe Insulation Requirements for Storage Tank Water Heaters

Inspection

Pipe Insulation

The following insulation is required (insulation values are for two inches or less pipes):

- R-4 on the first five feet of hot and cold water pipes for storage, non-recirculating system. There is no exception for water heater piping in the conditioned space.
- R-4 on the entire length of hot water recirculating piping on a recirculating system, regardless of the location of the piping.
- R-4 on piping from the heating source to the storage tank for boilers or solar water heating;
- R-3 on cooling system piping below 55ºF; and,
- Other insulation shown on the CF-1R is being used for a credit and must be installed as indicated on the plans.

I thought I was supposed to insulate the water heater pipes for either the first five feet or the length of piping before coming to a wall, whichever is greater. Did I misunderstand?

Yes. The requirement is that you must insulate the entire length of the first five feet, regardless of whether there is a wall (standards, Section 150(j)2). You have two options: (1) interrupt insulation for a fire wall and continue it on the other side of the wall, or (2) run the pipe through an insulated wall, making sure that the wall insulation completely surrounds the pipe.

When insulating the water heater piping, do I need to put insulation on the first five feet of cold water pipe?

Yes. Section 150(j)2 requires insulation on the cold water pipe also. When heated, the water expands and pushes hot water out the cold water line. This can start thermosyphoning, which continues to remove heat from the stored water. The insulation helps reduce this effect.

If the energy calculations show R-4 pipe insulation, is this a credit? What are the installation requirements for obtaining credit?

If R-4 pipe insulation is indicated on any form other than the MF-1R it is being used to obtain credit. (The MF-1R form indicates only mandatory insulation requirements—the first ***five*** feet of piping for a non-recirculating system or the entire length of recirculating sections of hot water piping for a circulating system.) If R-4 is indicated on the Computer Summary (C-2R) or the Certificate of Compliance (CF-1R) it is being calculated as a credit.

The installation requirements for receiving the R-4 piping insulation *credit* are:

- A non-recirculating water-heating system
- R-4 (or greater) insulation
- Insulation applied to all 3/4 inch or larger hot water mains
- Neither attic, wall nor underfloor insulation can be used as a substitute for this insulation.
- These requirements are in addition to mandatory insulation requirements of Section 150(j).

Can I get pipe insulation credit for a recirculating water-heating system?

No. Recirculating water-heating systems have a mandatory insulation requirement for the recirculating sections of hot water pipes. Pipes less than 2 inches must be insulated to R-4 and pipes greater than 2 inches need R-6 insulation.

When I'm insulating the pipes for a recirculating water-heating system, I insulate the entire length of hot water pipes. Do I need to insulate the runouts?

No. Since the water in runouts does not recirculate, they do not need to be insulated.

Energy Code

Solar Water Heating
(Section 150(j)3)

Solar water heating systems and/or collectors shall be certified by the Solar Rating and Certification Corporation.

Compliance/
Plan Check

Solar Water Heating

Solar water-heating systems and/or collectors must be certified by the Solar Rating and Certification Corporation (SRCC) as explained in Chapter 5.

Inspection

Solar Water Heating

- Certification of solar system and/or collectors by the Solar Rating and Certification Corporation (SRCC)
- Piping insulation from the indirect fired hot water system to the heat source
- Tank insulation on an indirect fired water heater without a label specifying R-16 internal insulation.

Introduction

Ducts, Plenums and Fans

The discussion of ducts contained in this chapter focuses on minimum mandatory requirements for duct construction, including excerpts from the *Uniform Mechanical Code* and construction details from the Air Diffusion Council. Chapter 4 and Appendicies J and K contain additional details on constructing tight ducts to eliminate potentially significant energy losses created by leaky ducts. Criteria for obtaining compliance credit for tight duct systems is also outlined in Chapter 4.

Energy Code

Ducts, Plenums and Fans (Section 150(m))

1. *UMC Compliance. All air distribution system ducts and plenums, including but not limited to building cavities, mechanical closets, air handler boxes and support platforms used as ducts or plenums, shall be installed, sealed and insulated to meet the requirement of the ICBO 1997 UMC Sections 601, 603, 604 and Standard 6-3, incorporated herein by reference. Portions conveying conditioned air shall either be insulated to a minimum installed level of R-4.2 (or any higher level required by UMC Section 604) or be enclosed entirely in conditioned space. Connections of metal ducts and the inner core of flexible ducts shall be mechanically fastened. Openings shall be sealed with mastic, tape, aerosol sealant or other duct closure system that meets the applicable requirements of UL 181, UL 181A or UL 181B. If mastic or tape is used to seal openings greater than 1/4 inch, the combination of mastic and either mesh or tape shall be used.*

***NOTE:** If the requirements of UL181, UL181A, or UL181B do **not** apply to the particular tape, aerosol sealant, or duct closure system being used, then those requirements are met for that particular application.*

2. *Factory-Fabricated Duct Systems.*

   A. *All factory-fabricated duct systems shall comply with UL 181 for ducts and closure systems, including collars, connections and splices.*

   B. *All pressure-sensitive tapes, heat-activated tapes, and mastics used in the manufacture of rigid fiberglass ducts shall comply with UL 181.*

   C. *All pressure-sensitive tapes, mastics used with flexible ducts shall comply with UL 181 or UL 181B.*

3. *Field-Fabricated Duct Systems.*

   A. *Factory-made rigid fiberglass and flexible ducts for field-fabricated duct systems shall comply with UL 181. All pressure-sensitive tapes, mastics, aerosol sealants or other closure systems used for installing field-fabricated duct systems shall meet the applicable requirements of UL 181, UL 181A or UL 181B. Note: If these requirements do not apply then they are met.*

   B. *Mastic Sealants and Mesh.*

      i. *Sealants shall comply with UL 181, UL 181A, or UL 181B, and be non-toxic and water resistant.*

      ii. *Sealants for interior applications shall pass ASTM tests C 731(extrudability after aging) and D 2202 (slump test on vertical surfaces), incorporated herein by reference.*

      iii. *Sealants for exterior applications shall pass ASTM tests C 731, C 732 (artificial weathering test) and D 2202, incorporated herein by reference.*

      iv. *Sealants and meshes shall be rated for exterior use.*

   C. *Pressure-Sensitive Tape. Pressure-sensitive tapes shall comply with UL 181, UL 181A, or UL 181B.*

   D. *Drawbands Used with Flexible Duct.*

      i. *Drawbands shall be either stainless-steel worm-drive hose clamps or uv-resistant nylon duct ties.*

ii. Drawbands shall have a minimum tensile strength rating of 150 pounds.

iii. Drawbands shall be tightened as recommended by the manufacturer with an adjustable tensioning tool.

E. Aerosol-Sealant Closures.

*i. Aerosol sealants shall meet the **applicable** requirements of UL 181, 181A or 181B and be applied according to manufacturer specifications. If the requirements of UL181, UL181A, or UL181B do not apply then these requirements are met.*

ii. Tapes or mastics used in combination with aerosol sealing shall meet the requirements of this section.

4. All duct insulation product R-values shall be based on insulation only (excluding air films, vapor barriers, or other duct components) and tested C-values at 75°F mean temperature at the installed thickness, in accordance with ASTM C518-85 or ASTM C177-85, incorporated herein by reference, and certified pursuant to Section 118.

5. The installed thickness of duct insulation used to determine its R-value shall be determined as follows:

A. For duct board, duct liner and factory-made rigid ducts not normally subjected to compression, the nominal insulation thickness shall be used.

B. For duct wrap, installed thickness shall be assumed to be 75 percent (25 percent compression) of nominal thickness.

C. For factory-made flexible air ducts, the installed thickness shall be determined by dividing the difference between the actual outside diameter and nominal inside diameter by 2.

6. Insulated flexible duct products installed to meet this requirement must include labels, in maximum intervals of 3 feet, showing the thermal performance R-value for the duct insulation itself (excluding air films, vapor barriers, or other duct components), based on the tests in Section 150(m)2. and the installed thickness determined by Section 150(m)3.C.

7. All fan systems, regardless of volumetric capacity, that exhaust air from the building to the outside shall be provided with backdraft or automatic dampers to prevent air leakage.

8. All gravity ventilating systems that serve conditioned space shall be provided with either automatic or readily accessible, manually operated dampers in all openings to the outside except combustion inlet and outlet air openings and elevator shaft vents.

EXCEPTION to Section 150(m)1.: The requirements do not apply to ducts and fans integral to a wood heater or fireplace.

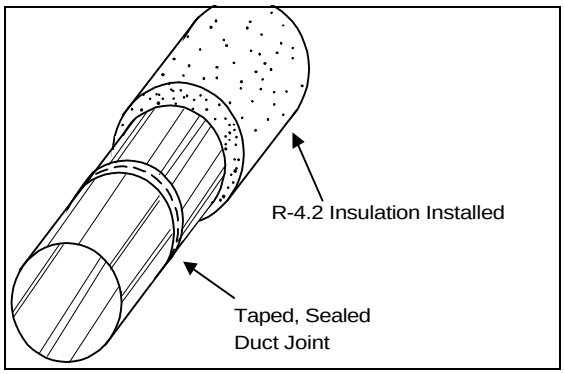

Figure 2-11: Duct Requirements

Compliance/
Plan Check

Ducts, Plenums and Fans

Ducts conveying conditioned air must either be insulated to a minimum installed level of R-4.2 (or any higher level required by the UMC Section 604) or be enclosed entirely in conditioned space (see Figure 2-11).

All duct insulation product R-values shall be based on insulation only (excluding air films, vapor barriers or other duct components) and tested c-values as specified above in Section 150(m)4. and certified pursuant to Section 118.

The installed thickness of duct insulation used to determine its R-value shall be determined in accordance with Section 150(m)5.

INSULATION AND INSTALLATION

Air handling ducts and plenums, and any building spaces used as a duct or plenum, must meet UMC Section 601 (material) and 603 (installation) requirements, and Standard 6-3 (See figures 2-12 through 2-18 for duct construction requirements from the UMC.)

Ducts conveying conditioned air must either be enclosed entirely in conditioned space or insulated to a minimum installed level of R-4.2 (unless a higher level is required by the UMC). In two situations Section 604 of the UMC requires R-6.3 duct insulation instead of R-4.2:

1. When cooling system ducts are installed on the roof or exterior of the building.
2. When heating system ducts are installed on the roof (exterior) of the building in an area with greater than 8,000 heating degree days (see Appendix C heating degree days (HDD)).

NOTE:

- The insulation levels of the UMC are mandatory *minimum* levels. If compliance calculations show a higher R-value is being used for credit, the higher value is required.
- The duct location must match the location showed on the Certificate of Compliance (CF-1R).

Additional duct construction requirements include:

1. Mechanical fastening of connections of metal ducts and the inner core of flexible ducts is required.
2. Openings must be sealed with mastic, tape, aerosol sealant or other duct closure systems that meet the applicable requirements of UL 181.
3. Openings larger than 1/4 inch must be sealed with a combination of mastic and either mesh or tape.

Ducts and fans integral to a wood heater or fireplace are exempt from these insulation and installation requirements.

FACTORY-FABRICATED DUCT SYSTEMS

1. Duct systems comply with UL 181 for ducts and closure systems, including collars, connections and splices.
2. All pressure-sensitive tapes, heat-activated tapes (for fiberglass ducts only), and mastics used to make rigid fiberglass or flexible ducts must comply with UL 181 or UL 181B.

FIELD-FABRICATED DUCT SYSTEMS

1. Factory-made fiberglass and flexible ducts must comply with UL 181.
2. All pressure-sensitive tapes, mastics, aerosol sealants or other closure systems must meet applicable UL 181, UL 181A or UL 181B requirements.

Pressure-Sensitive Tape

- Pressure-sensitive tapes shall comply with applicable UL 181, UL 181A or UL 181B requirements.

Mesh and Mastic Sealants

Mesh and mastic sealants must:

- Be UL 181, UL 181A or UL 181B complying, non-toxic and water resistant.
- Pass appropriate ASTM tests specified in Section 150(m)3.B above for either interior or exterior use.

Aerosol-Sealant Closures

- Aerosol sealants must meet applicable UL 181, UL 181A or UL 181B requirements and be applied as specified by the manufacturer.
- If tapes or mastics are used in combination with aerosol sealing, they must meet the requirements specified above.

Drawbands Used with Flexible Duct

Drawbands shall:

- Be either stainless-steel worm-drive hose clamps or uv-resistant nylon duct ties.
- Have a minimum tensile strength rating of 150 pounds.

- Be tightened as recommended by the manufacturer with an adjustable tensioning tool.

PRODUCT MARKINGS

Insulated flexible duct products installed to meet this requirement must include labels, in maximum intervals of three feet, showing the R-value for the duct insulation (excluding air films, vapor barriers or other duct components), based on the tests and thickness specified in Section 150(m) above.

FAN, EXHAUST AND VENTILATION

Fan systems that exhaust air from the building to the outside must be provided with back draft or automatic dampers.

Gravity ventilating systems must have an automatic or readily accessible, manually operated damper in all openings to the outside, except combustion inlet and outlet air openings and elevator shaft vents. This includes clothes dryer exhaust when installed in conditioned space.

Inspection

Ducts, Plenums and Fans

INSTALLATION AND INSULATION

Any building spaces used as a duct or plenum, must meet UMC Section 601 (material) and 603 (installation) requirements, and Standard 6-3.

Ducts in unconditioned spaces must be insulated to a minimum installed level of R-4.2 unless a higher level is required by the UMC or by the compliance calculations. All duct insulation and all insulated flexible ducts must have labels specifying tested R-values at installed thicknesses. These R-values must correspond to those specified on the CF-1R form.

Additionally,

- Mechanical fastening of connections of metal ducts and the inner core of flexible ducts is required.
- Openings must be sealed with mastic, tape, aerosol sealant or other duct closure systems that meet the applicable requirements of UL 181.
- Opening larger than 1/4 inch sealed with mastic or tape must be sealed with a combination of mastic and either mesh or tape.

Ducts and fans integral to a wood heater or fireplace are exempt from these insulation and installation requirements.

DUCT LOCATION

Duct location should be as specified on the CF-1R. Compliance can be dependent on the duct location assumed in the calculations. For example, if ducts are specified in conditioned space but installed in the attic, the plan checker will need to approve the change.

FACTORY-FABRICATED DUCT SYSTEMS

1. Duct systems comply with UL 181.
2. All pressure-sensitive tapes, heat-activated tapes, and mastics must comply with UL 181.

FIELD-FABRICATED DUCT SYSTEMS

1. Ducts must comply with UL 181.
2. All pressure-sensitive tapes, mastics, aerosol sealants or other closure systems must meet applicable UL requirements.

   Pressure-sensitive tapes shall comply with applicable UL 181 requirements.

   Mastic and mesh sealants must:

   - Be UL complying, non-toxic and water resistant.
   - Pass appropriate ASTM tests for their specific use.

   Aerosol-sealant closures:

   - Must meet applicable UL 181 requirements and be applied as specified by the manufacturer.
   - When used in combination with tapes or mastics, the tape or mastic must meet the requirements specified above.

   Drawbands used with flexible duct shall:

   - Be either stainless-steel worm-drive hose clamps or uv-resistant nylon duct ties.
   - Have a minimum tensile strength rating of 150 pounds.

- Be tightened as recommended by the manufacturer with an adjustable tensioning tool.

FAN, EXHAUST AND VENTILATION

Fans that exhaust air from the building to the outside must be provided with back draft or automatic dampers.

Gravity ventilating systems must have either an automatic or readily accessible, manually operated damper in all openings to the outside. This includes clothes dryer exhaust when installed in conditioned space. Exception: combustion inlet and outlet air openings, and elevator shaft vents.

Credit for quality constructed ducts that go beyond minimum mandatory requirements is available as detailed in Chapter 4Sections 4.xx through 4.yy.

Chapter 9 also contains a detailed listing for inspecting quality constructed ducts and Section 6.310 of Standard 6-3 of the UMC has an enforcement checklist for flexible duct installations

Duct Installation Standards
Uniform Mechanical Code (Standard 6-3)

These standards from the UMC are based on the descriptions given in *Flexible Duct Performance and Installation Standards.* published by the Air Diffusion Council, 104 South Michigan avenue, Suite 1500, Chicago, Illinois 60603, telephone (312) 201-0101.

Note: These are minimum standards. Compliance with these standards is not sufficient to qualify for compliance credits for quality-constructed duct systems. These compliance credits are not allowed for duct systems that use fabricated, rubber adhesive duct tape unless it is installed in combination with mastic and drawbands. Also, these compliance credits are not allowed if building space s are used as a duct or plenum. These compliance credits are only allowed for duct systems that are carefully designed and installed.

Ducts shall be installed fully extended as shown in Figure 2-12. If compressed or with excess lengths, as shown in Figure 2-13, friction losses are increased.

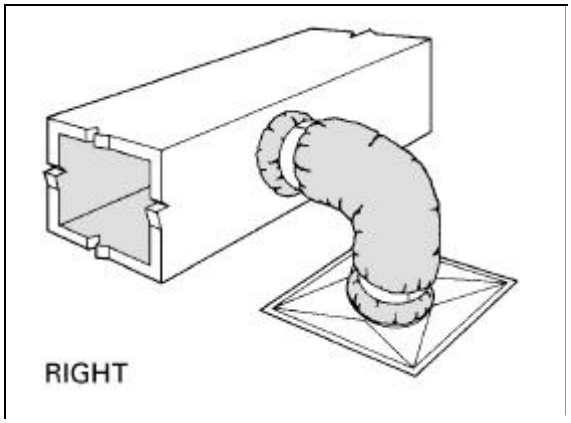

Figure 2-12: Duct Installation (Right)

Avoid bending ducts across sharp corners or incidental contact with metal fixtures, pipes or conduits. Also avoid installing the duct near hot equipment such as furnaces, boilers, or steam pipes, that is above the recommended flexible duct use temperature.

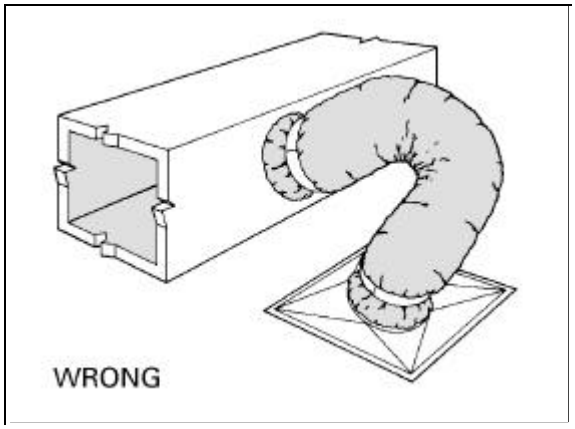

Figure 2-13: Duct Installation (Wrong)

Connecting, Joining and Splicing Flexible Duct

All connections, joints and splices shall be made in accordance with the manufacturer's installation instructions.

For flexible ducts with plain ends, standardized installation instructions are shown in Figures 2-14A-C for nonmetallic ducts and Figures 2-15A-C for metallic ducts. Because of the variety of ducts and duct assemblies with special end treatments, no standardized installation instructions are shown. Instead, consult the manufacturer's installation instructions.

Sheet metal collars to which the flexible ducts with plain ends are attached shall be a minimum of 2 inches in length.

Sheet metal sleeves used for joining two sections of flexible ducts with plain ends shall be a minimum of 4 inches in length.

Sheet metal collars and sleeves should be beaded for pressures exceeding 2 inches w.g. (500 Pa) and for diameters 12 inches and larger when used with metallic ducts.

Nonmetalic Air Ducts and Air Connectors

Cut completely around and through duct with knife or scissors. Cut wire with wire cutters (Figure 2-14A).

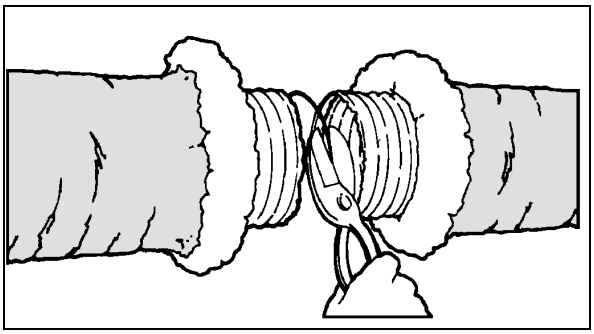

Figure 2-14A: Connections for Nonmetallic Air Ducts and Air Connectors

Pull jacket and insulation back from core. Slide at least 1 inch of core over collar, pipe or fitting. Tape core with at least two wraps of duct tape. Secure with a clamp (Figure 2-14B**)**.

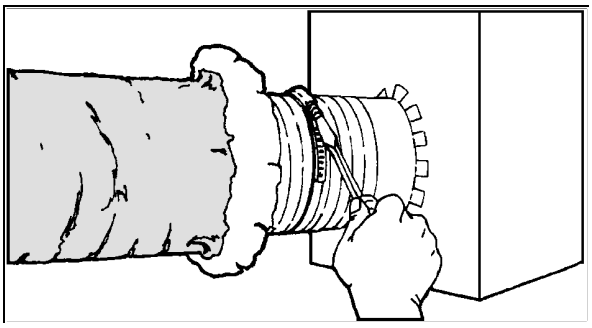

Figure 2-14B: Connections for Nonmetallic Air Ducts and Air Connectors

Pull jacket and insulation back over core. Tape jacket with at least two wraps of duct tape. A clamp may be used in place or in combination with the duct tape (Figure 2-14C).

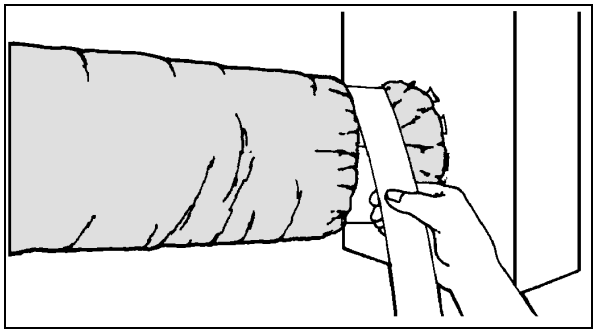

Figure 2-14C: Connections for Nonmetallic Air Ducts and Air Connectors

Peel back jacket and insulation from core. Butt two cores together on a standard 4-inch metal sleeve (Figure 2-15A).

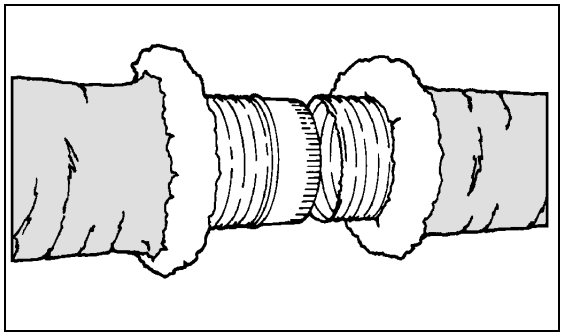

Figure 2-15A: Splices for Nonmetallic Air Ducts and Air Connectors

Tape core with at least two wraps of duct tape. Secure with two clamps (Figure 2-15B).

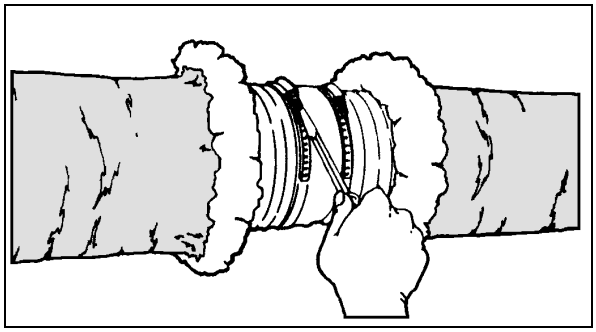

Figure 2-15B: Splices for Nonmetallic Air Ducts and Air Connectors

Pull jacket and insulation back over cores. Tape jacket. Tape jacket with at least two wraps of duct tape (Figure 2-15C).

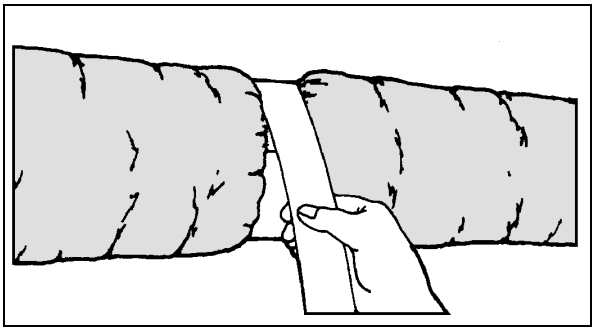

Figure 2-15C: Splices for Nonmetallic Air Ducts and Air Connectors

NOTES (for Figures 2-14 and 2-15):

1. Use beaded fittings for pressures exceeding 2 inches w.g. (500 Pa) and for diameters 12 inches and larger.
2. Use tapes listed and labeled to Standard UL 181B and marked 181B-FX.
3. Use clamps as specified on manufacturer's UL 181 installation instructions.

After cutting duct to desired length, fold back jacket and insulation exposing core. Trim core ends squarely using metal shears (Figure 2-16A). Determine optional sealing method (Figure 2-16B or 2-16E) before proceeding.

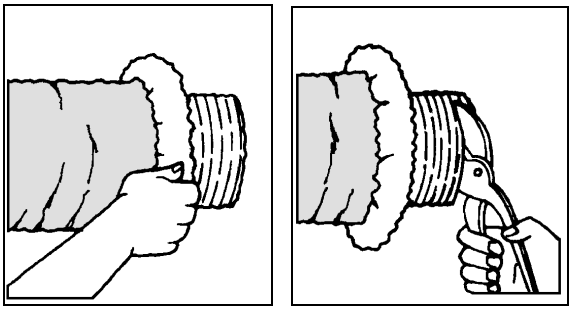

Figure 2-16A: Connections and Splices for Metallic Air Ducts and Air Connectors

When mastics are required, and for pressures 4 inches w.g. (1000 Pa) and over, seal joint with mastic applied uniformly to the outside surface of collar/sleeve (Figure 2-16B). Disregard this step when not using mastics and proceed to Figure 2-16C.

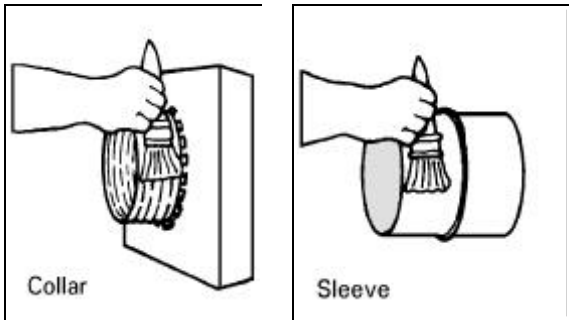

Figure 2-16B: Connections and Splices for Metallic Air Ducts and Air Connectors

Slide at least 1 inch of core over metal collar for attaching duct to take off or over ends of a 4-inch metal sleeve for splicing two lengths of duct (Figure 2-16C).

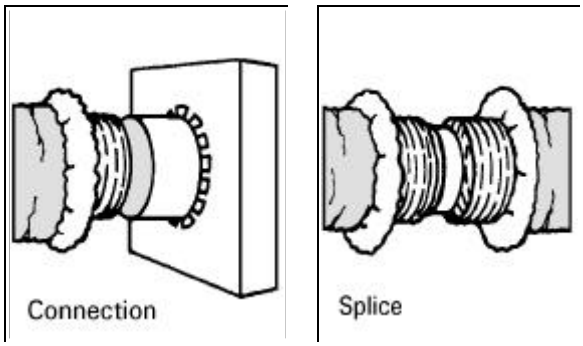

Figure 2-16C Connections and Splices for Metallic Air Ducts and Air Connectors

Secure to collar/sleeve using #8 sheet metal screws spaced equally around circumference. Use three screws for diameters under 12 inches and five screws for diameters 12 inches and over (Figure 2-16D).

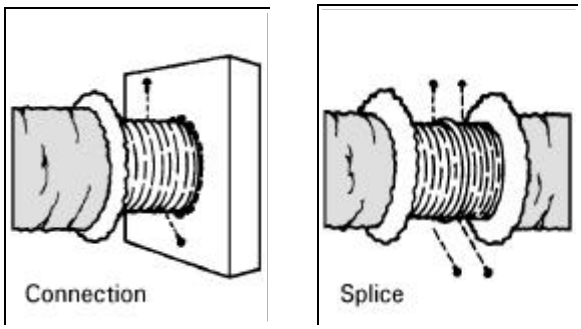

Figure 2-16D: Connections and Splices for Metallic Air Ducts and Air Connectors

For pressures under 4 inches w.g. (1000 Pa) and over, seal joint with mastic applied uniformly to the outside surface of collar/sleeve (Figure 2-16E). Disregard this step when not using mastics and proceed to Figure 2-16C.

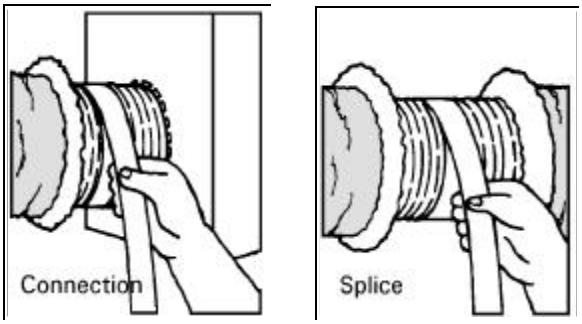

Figure 2-16E: Connections and Splices for Metallic Air Ducts and Air Connectors

Pull jacket and insulation back over core. Tape jacket with two wraps of duct tape. A clamp may be used in place or in combination with the duct tape (Figure 2-16F).

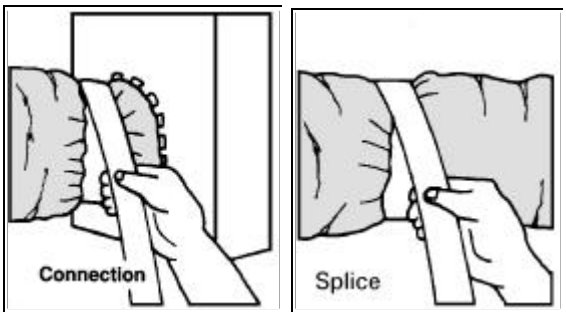

Figure 2-16F: Connections and Splices for Metallic Air Ducts and Air Connectors

NOTES (for Figures 2-16A through F):

1. For uninsulated air ducts and air connectors, disregard references to insulation and jacket.
2. Use mastics listed and labeled to Standard UL 181B and marked 181B-M on container.
3. Use tapes listed and labeled to Standard UL 181B and marked 181B-FX.
4. Use clamps as specified on manufacturer's UL 181 installation instructions.

Supporting Flexible Duct

Flexible duct shall be supported at manufacturers recommended intervals, but no greater than a distance of five feet (see Figure 2-17). Maximum permissible sag is 1/2 inch per foot of space between supports.

A connection to rigid duct or equipment shall be considered a support joint. Long horizontal duct runs with sharp bends shall have additional supports before and after the bend approximately one duct diameter from the center line of the bend.

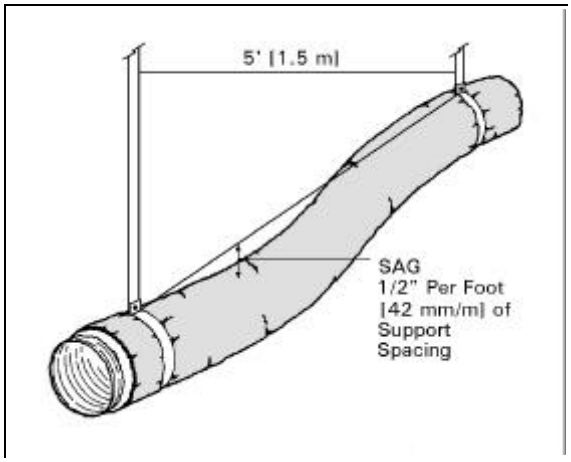

Figure 2-17: Flexible Duct Support

Hanger or saddle material in contact with the flexible duct shall be of sufficient width to prevent any restriction of the internal diameter of the duct when the weight of the supported section rests on the hanger or saddle material. In no case will the material in contact with the flexible duct be less than 1-1/2 inches wide (see Figure 2-18).

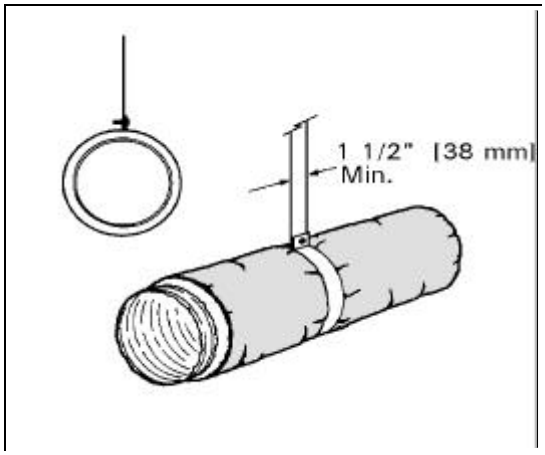

Figure 2-18: Hanger or Saddle Material

Suggested Installation Restrictions and Use Limitations

The Air Diffusion Council's publication for flexible ducts notes that there are specific restrictions and limitations related to the use of flexible duct. Some are due to National Fire Protection Association Standard, model codes and various state/local codes. Others are due to end use performance where the product was not designed for that specific use. Some (not all inclusive) are:

- Cannot be used for vertical risers serving more than two stories in height.
- Cannot be used in systems with entering air temperature higher than 250°F.
- Must be installed in accordance with conditions of listing.
- When installed in a fire-rated floor/roof ceiling assembly, ducts shall conform with the design of the tested fire-resistive assembly.
- Should be interrupted at the immediate area of operation of electric, fossil fuel or solar energy collection heat sources to meet listed equipment clearances specified.
- Air connectors (does not apply to air ducts) shall not be installed in lengths greater than 04 feet for any given run; shall not pass through any wall, partition or enclosure of a vertical shaft with a 1 hour or more fire resistive rating; shall not pass through floors.
- Should not penetrate walls where fire dampers are required.
- Should not be used outdoors unless specifically designed to withstand exposure to direct sunlight and the weathering elements.
- Should not be used to vent appliances for cooking, heating and clothes drying unless approved and recommended by the appliance manufacturer.
- Should not be installed in concrete, buried below grade or in contact with the ground.

Suggested Duct Sizing Guidelines

The combined friction and dynamic pressure losses must be taken into consideration to properly size any duct. Pressure losses caused by the roughness of the duct wall resisting air movement are known as friction losses. Pressure losses when air flow changes direction, as caused by bends or when air flows across other system components, are known as dynamic losses.

To prevent undersizing or oversizing of flexible ducts and achieve the designed air delivery performance:

- Have an understanding of and properly use the air friction chart.
- Use a proven method of duct sizing, one that has taken into consideration both friction and dynamic losses.
- Use friction loss data characteristic of flexible duct. Do not use data for round sheet metal duct.
- Since all flexible duct is not alike, use the published data from the manufacturer of the specific flexible duct being used.

Suggestions for Avoiding Duct Leakage

To assure low leakage rate in flexible duct, the following practices are recommended:

- Reference industry manuals (SMACNA, NAIMA) for making round tap-ins into and sealing fitting joints to rigid ducts, plenums, etc.
- Make flexible duct connections/splices in accordance with manufacturer's recommended installation instructions.
- Seal flexible duct connections with sealing materials listed and labeled to UL 181B. Mechanically secure connections with approved clamping material.
- Repair any rip, tear or hole in the air barrier using materials listed and labeled to Standard UL 181B and methods recommended by the manufacturer.

Energy Code

Pool and Spa Equipment (Section 114)

Mandatory Requirements for Pool and Spa Heating Systems and Equipment.

(a) ***Certification by Manufacturers****. Any pool or spa heating system or equipment may be installed only if the manufacturer has certified that the system or equipment has all of the following:*

1. ***Efficiency****. A thermal efficiency for gas-fired systems of at least 78%, when tested according to ANSI Standard Z21.56-1994; and*

2. ***On-Off Switch****. A readily accessible on-off switch, mounted on the outside of the heater, that allows shutting off the heater without adjusting the thermostat setting; and*

3. ***Instructions****. A permanent, easily readable, and weatherproof plate or*

card that gives instruction for the energy efficient operation of the pool or spa and for the proper care of pool or spa water when a cover is used; and

4. ***Electric Resistance Heating**. No electric resistance heating; and*

EXCEPTION No. 1 to Section 114(a)4.: Listed package units with fully insulated enclosures, and with tight-fitting covers that are insulated to at least R-6.

EXCEPTION No. 2 to Section 114(a)4.: Pools or spas deriving at least 60% of the annual heating energy from site solar energy or recovered energy.

5. ***Pilot Light**. No pilot light.*

(b) ***Installation**. Any pool or spa heating system or equipment shall be installed with all of the following:*

1. ***Piping**. At least 36" of pipe between the filter and the heater, to allow for the future addition of solar heating equipment; and*

2. ***Covers**. A cover for outdoor pools or outdoor spas; and*

EXCEPTION to Section 114(b)2.: Pools or spas deriving at least 60% of the annual heating energy from site solar energy or recovered energy.

3. ***Directional Inlets and Time Switches for Pools**. If the system or equipment is for a pool:*

A. The pool shall have directional inlets that adequately mix the pool water; and

B. The circulation pump shall have a time switch that allows the pump to be set to run in the off-peak electric demand period, and for the minimum time necessary to maintain the water in the condition required by applicable public health standards.

EXCEPTION to Section 114(b)3.B.: Where applicable public health standards require on-peak operation.

Compliance/ Plan Check

Pool and Spa Equipment

Before any pool or spa heating system or equipment may be installed, the manufacturer must certify to the Commission that the system or equipment complies with Section 114. The requirements include minimum heating efficiency, an on-off switch, permanent operating instructions, no pilot light and no electric resistance heating, with two exceptions. Electric resistance heating may be installed for:

1. Listed package units with fully insulated enclosures (e.g., hot tubs), and with tight-fitting covers, insulated to at least R-6.

2. Pools or spas getting 60 percent or more of their annual heating from site solar energy or recovered energy.

Construction

Pool and Spa Equipment

Any pool or spa must be installed with all of the following:

- At least 36 inches of pipe between the filter and heater to allow for the future addition of solar heating equipment;

- A cover for outdoor pools or outdoor spas except for pools or spas deriving at least 60 percent of the annual heating energy from site solar energy or recovered energy;

- If the heating system or equipment is for a pool:

  a. The pool must have directional inlets to adequately mix the pool water; and

  b. The circulation pump must be capable of being set to run for the minimum number of hours to maintain the water in an acceptable condition and to run at off-peak electric demand periods.

Inspection

Pool and Spa Equipment

EQUIPMENT

Gas:

1. Thermal efficiency 78 percent,
2. Accessible shut-off switch (independent of temperature),
3. Permanent and readable instructions for efficient operation and maintenance, and
4. No pilot light.

Electric:

NOT ALLOWED except when:

1. At least 60 percent solar heating or site recovered energy provided, and
2. Package unit has fully insulated enclosure with tight-fitting, R-6 cover (e.g., hot tub).

INSTALLATION

1. At least 36-inch pipe length between filter/ heater (for future solar),
2. Cover (except if solar heating),
3. Ability to mix pool water, and
4. Time switch for pool pump (allows control of length of time and time of day)

Energy Code

Pilot Lights Prohibited (Section 115)

Natural Gas Central Furnaces, Cooking Equipment, and Pool and Spa Heaters: Pilot Lights Prohibited.

Any natural gas system or equipment listed below may be installed only if it does not have a continuously burning pilot light:

(a) Fan type central furnaces.

(b) Household cooking appliances.

EXCEPTION to Section 115(b): Household cooking appliances without an electrical supply voltage connection and in which each pilot consumes less than 150 Btu/hr.

(c) Pool heaters.

(d) Spa heaters.

Construction

Pilot Lights Prohibited

Any of the following natural gas systems or equipment may be installed only if it does *not* have a continuously burning pilot light:

- Fan type central furnaces
- Household cooking appliances, except cooking appliances without an electrical supply voltage connection and in which each pilot consumes less than 150 Btu/hr
- Pool heaters
- Spa heaters
- Fireplace*
- Decorative gas appliance*
- Gas log*

*Section 150(e) specifies that a fireplace, decorative gas appliance, gas log cannot have a continuously burning pilot light.

Inspection

Pilot Lights Prohibited

The following natural gas appliances cannot have a standing or continuously burning pilot light:

- Fan type central furnaces
- Household cooking appliances, except cooking appliances without an electrical supply voltage connection and in which each pilot consumes less than 150 Btu/hr
- Pool heaters
- Spa heaters
- Fireplace
- Decorative gas appliance
- Gas log

Examples

Pilot Lights Prohibited

Under what circumstances is a constantly (or continuously) burning pilot light prohibited on certain appliances?

For compliance with the standards, Section 115 prohibits continuously burning pilot lights for some natural gas burning equipment (this does not include liquefied petroleum gas burning appliances). The equipment types are:

- Household cooking appliances with an electrical supply voltage connection in which each pilot consumes 150 Btu/hr or more
- Pool heaters
- Spa heaters
- Fan type central furnaces

Section 150(e) prohibits continuously burning pilot lights for:

- Fireplaces
- Decorative gas appliances
- Gas logs

For compliance with federal and state appliance regulations (which apply to any appliance sold or offered for sale in California), a constant burning pilot light is prohibited on:

- Gas kitchen ranges and ovens with an electric supply cord
- Pool heaters, except those that burn liquefied petroleum gas

2.5 LIGHTING

Energy Code

Kitchen Lighting (Section 150(k)1, 3)

1. *Luminaires for general lighting in kitchens shall have lamps with an efficacy of not less than 40 lumens per watt. General lighting must provide a sufficient light level for basic kitchen tasks and provide a uniform pattern of illumination. A luminaire(s) that is(are) the only lighting in a kitchen will be considered general lighting. General lighting shall be controlled by a switch on a readily accessible lighting control panel at an entrance to the kitchen.*

   Additional luminaires to be used only for specific decorative effects need not meet this requirement.

3. *Luminaires installed to meet the 40 lumens per watt requirements of Section 150(k) 1. or 2. shall not contain medium base incandescent lamp sockets, and shall be on separate switches from any incandescent lighting.*

Construction

Kitchen Lighting

Installing energy-efficient lamps and fixtures can reduce lighting energy costs without sacrificing the quality or quantity of light available. As indicated in Table 2-2, a 40-watt standard fluorescent lamp is over four times as efficient as a 100-watt standard incandescent lamp.

The general lighting in kitchens must:

- Have an efficacy of *at least 40 lumens/watt* (see Table 2-2).
- Provide a uniform pattern of lighting, such as a fixture in the center of the kitchen or around the perimeter (not a fixture in the corner).
- Provide a light level sufficient for performing basic kitchen tasks such as preparing meals and washing dishes.
- Be controlled on a readily accessible switch at an entrance to the kitchen (not in a cupboard or beside the kitchen sink).
- Be switched independent of incandescent lighting.
- Shall not contain medium-base incandescent lamp sockets. This prevents the occupant from replacing the efficient light source with an incandescent bulb.

If there is only one light in the kitchen, it is general lighting.

Additional luminaires for decorative effect do not need to meet these requirements

Incandescent lighting fixtures recessed into insulated ceilings must be approved for zero-

clearance insulation cover (IC-rated) in compliance with Section 150(k)4 (see below).

Inspection

Kitchen Lighting

The lighting in the kitchen, either general or the only lighting, must:

- Be fluorescent or another product that has at least 40 lumens/watt (see Table 2-2).
- Provide a uniform pattern of lighting, such as a fixture in the center of the kitchen or around the perimeter (not a fixture in the corner).
- Provide a light level sufficient for performing basic kitchen tasks such as preparing meals and washing dishes.
- Be controlled on a readily accessible switch at an entrance to the kitchen (not in a cupboard or beside the kitchen sink).
- Be switched separately from incandescent lighting and on a control panel at an entrance to the kitchen.
- Not contain medium-base incandescent lamp sockets. This prevents the occupant from replacing the efficient light source with an incandescent bulb.

Table 2-2. Typical Efficacy of Luminaries

Light Source	Type	Rated Lamp Watts	Typical Efficacy Lumens/Watt[1]
Incandescent	Standard	40 - 100	14 - 18
Incandescent	Halogen	40 - 250	20[2]
Incandescent	Halogen IR	See footnote [3]	Up to 30
Fluorescent (Lamp/Ballast Systems)[4]	Full-Size, 4' Long	32 - 40	69 - 91
	U-Shaped T-8 Bipin	16 - 31	78 - 90
	Compact Fluorescent	5 - 9	26 - 38
	Compact Fluorescent	13 +	42 - 58
Metal Halide	Metal Halide	32 - 175	50 - 90
High Pressure Sodium	White High Pressure Sodium	35 - 100	36 - 55

[1] Includes power consumed by ballasts where applicable.

[2] Halogen capsule incandescent lamps may be the most efficient light source for highlighting applications. Most halogen lamps are designed to produce a beam of directed light. Manufacturer's data typically list the "candlepower" intensity of that beam, rather than lumens (lumens measure total light output in all directions).

[3] A new technology using infrared reflecting films on the halogen capsules has increased output up to 30 lumens/watt for some high wattage lamps.

[4] Efficacy of fluorescent lighting varies depending on lamp and ballast types.

Kitchen Lighting

Would one fluorescent light in a kitchen, installed over the sink or under one cabinet, meet the "general lighting" requirements?

No. The general lighting must evenly light the entire kitchen. Two *examples* of acceptable lighting configurations are (1) fluorescent lighting (or other light source with at least 40-lumens/watt) around the perimeter of the kitchen (under or over cabinets), or (2) a fluorescent in the center of the kitchen.

If a customer asks me not to install fluorescent lights in their home, are there any other light sources I can use to meet the kitchen lighting requirements?

Yes, although they may not be readily available, there are products other than fluorescent which meet the lighting requirements of the standards, Section 150(k). The two criteria for the kitchen and bathroom general lighting are (1) a lamp with an efficacy of 40 lumens/watt or more, and (2) the fixtures cannot contain a medium base incandescent lamp socket. Table 2-2 indicates the typical lumens/watt of several common products, some of which meet the required lumens/watt. Specifications from a product's manufacturer can also be used to verify that a product has at least 40 lumens/watt.

Energy Code

Bathroom Lighting (Section 150(k)2 - 3)

2. *Each room containing a shower or bathtub shall have at least one luminaire with lamp(s) with an efficacy of 40 lumens per watt or greater. If there is more than one luminaire in the room, the high efficacy luminaire shall be switched at an entrance to the room.*

   ALTERNATIVE to Section 150(k)2.: A high efficacy luminaire need not be installed in a bathroom if:

   A. *A luminaire with lamps with an efficacy of 40 lumens per watt or greater is installed in a utility room, laundry room, or garage; and*

   B. *All luminaires permanently mounted to the residence providing outdoor lighting shall be installed with the following characteristics:*

      (1) *Luminaires with lamps with 40 lumens per watt or greater; or*

      (2) *Luminaires with lamps with an efficacy of less than 40 lumens per watt shall be equipped with a motion sensor.*

   Note: When using this alternative for multiple bathrooms, after complying with B. for the first bathroom, each additional bathroom in which a high efficacy luminaire is not installed must comply with A. alone.

3. *Luminaires installed to meet the 40 lumens per watt requirements of Section 150(k) 1. or 2. shall not contain medium base incandescent lamp sockets, and shall be on separate switches from any incandescent lighting.*

Construction

Bathroom Lighting

Each room with a shower or bathtub must have at least one luminaire with lamps with an efficacy of at least 40 lumens/watt.

If there is more than one luminaire in the room, the high-efficacy luminaire must be switched at an entrance to the room.

As an alternative, both of the following are required:

1. A luminaire with 40 lumens/watt lamps must be installed in another room with utilitarian functions such as a laundry room, utility room or garage; and
2. All permanently mounted outside lighting must either be at least 40 lumens/watt or equipped with a motion sensor.

When using this alternative for two or more rooms with showers or bathtubs, compliance with item 1. above is sufficient for the second or third rooms since the outside lighting is already in compliance with item 2 above.

Luminaires installed to meet the 40 lumens/watt requirements cannot contain medium base incandescent lamp sockets, and must be on separate switches from incandescent lighting.

Incandescent lighting fixtures recessed into insulated ceilings must be approved for zero-clearance insulation cover (IC-rated) in compliance with Section 150(k)4 (see below).

Installing energy-efficient lamps and fixtures can reduce lighting energy costs without sacrificing the quality or quantity of light available. As indicated in Table 2-2, a 40 watt standard fluorescent lamp is over four times as efficient as a 100 watt standard incandescent lamp.

Inspection

Bathroom Lighting

Each room with a shower or bathtub (no requirement in a half-bath) must have at least one luminaire with lamps with an efficacy of at least 40 lumens/watt, which may be fluorescent or another efficient technology (see Table 2-2 above).

When there is more than one luminaire in the room, the high-efficacy luminaire (greater than or equal to 40 lumens/watt) must be switched at an entrance to the room.

As an alternative, both of the following are required:

1. A luminaire with 40 lumens/watt lamps must be installed in a laundry room, utility room or garage; and
2. All permanently mounted outside lighting must either be at least 40 lumens/watt or equipped with a motion sensor.

Luminaires installed to meet the 40 lumens/watt requirements cannot contain medium base incandescent lamp sockets, and must be on separate switches from incandescent lighting.

Incandescent lighting fixtures recessed into insulated ceilings must be IC-rated in compliance with Section 150(k)4 (see below).

Examples

Bathroom Lighting

If a customer asks me not to install fluorescent lights in their home, are there any other light sources I can use to meet the bathroom and kitchen lighting requirements?

Yes, although they may not be readily available, there are products other than fluorescent which meet the lighting requirements of the standards, Section 150(k). The two criteria for the kitchen and bathroom general lighting are (1) a lamp with an efficacy of 40 lumens/watt or more, and (2) the fixtures cannot contain a medium base incandescent lamp socket. Table 2-2 indicates the typical lumens/watt of several common products, some of which meet the required lumens/watt. Specifications from a product's manufacturer can also be used to verify that a product has at least 40 lumens/watt.

Energy Code

Recessed Lighting (Section 150(k)4)

All incandescent lighting fixtures recessed into insulated ceilings shall be approved for zero-clearance insulation cover (I.C.) by Underwriters Laboratories or other testing/rating laboratories recognized by the International Conference of Building Officials.

Construction

Recessed Lighting

All incandescent lighting fixtures recessed into insulated ceilings must be approved for zero-clearance insulation cover (IC-rated) in compliance with Section 150(k)4.

Although this requirement does not apply to fluorescent fixtures, recessed lighting fixtures left uninsulated significantly increase the heat loss through the roof/ceiling area reducing the effectiveness of the insulation.

Heat lamps are not required to be IC-rated.

Examples

Recessed Lighting

I'd like to know if it is possible to use non-IC rated incandescent fixtures recessed in an insulated ceiling. Although I've never been able to find a bulb heater (heat lamp) that is IC-rated [approved for insulation cover], they are very popular with my customers. Can I use this product?

It is possible to build a box of gypsum board or wire mesh over the fixture in the attic, which can then be insulated. By separating the insulation from the fixture, the fixture is not recessed into the insulated ceiling. As long as there is sufficient clearance between the fixture and the insulation to prevent a fire hazard, this assembly is acceptable for meeting Section 150(k)4 of the standards. **NOTE**: Recessed fluorescent fixtures do not need to be IC-rated).

If insulation is installed between floors of an apartment building (sound-proofing), can I install incandescent fixtures that are not IC-rated?

No. Although this isn't part of the building envelope, standards Section 150(k) states that any incandescent fixtures recessed into an insulated ceiling must be approved for zero-clearance insulation cover.

2.6 SAMPLE FORMS

Compliance/ Plan Check

Mandatory Measures Checklist

A sample of the recommended Mandatory Measures Checklist (MF-1R) is included here. More information about the form are included in Chapter 1. Blank forms are contained in Appendix A.

Compliance/ Plan Check

Installation Certificate

A sample of the recommended Installation Certificate (CF-6R) is included here. More information about filling out the form or inspections tied to the form are included in Chapter 1. Blank forms are contained in Appendix A.

Compliance/ Plan Check

Insulation Certificate

A sample of the recommended Insulation Certificate (IC-1) is included here. More information about filling out the form or inspections tied to the form are included in Chapter 1. Blank forms are contained in Appendix A.

Chapter 3
Prescriptive Packages

3.0 SUMMARY

This chapter details the use of the *Prescriptive Packages* (referred to as *Alternative Component Packages*) to show compliance with the *Energy Efficiency Standards* (standards). The prescriptive approach is one of the paths available for compliance. The other approach, the computer method, is a performance approach and is explained in Chapters 4 and 5.

The introductory Part 3.1 defines the structure of the prescriptive packages and how they are used for compliance. Part 3.2 explains how each package component is applied to the building design. Part 3.3, on compliance documentation, explains the type of forms submitted with this approach. A listing of all package requirements in each climate zone is included at the end of the chapter (Tables No. 1-Z1 through Z16 in Part 3.4).

Additions to existing buildings demonstrating compliance with the prescriptive package approach are discussed in Chapter 7.

CHAPTER OVERVIEW:

Part	Topic	Page
3.1	**Introduction**	**3-1**
3.2	**Package Requirements**	**3-2**
	Insulation	3-3
	Glazing/Fenestration	3-7
	Shading	3-8
	Thermal Mass	3-10
	Continuous Infiltration Barrier	3-17
	Air-to-Air Heat Exchanger	3-18
	Space Conditioning	3-18
	Water Heating Systems	3-20
	Package D, Reference House	3-23
3.3	**Prescriptive Compliance Documentation**	**3-24**
3.4	**Package Requirements for All Climate Zones**	**3-27-3-44**

Applicable sections of California Code of Regulations, Title 24, Part 6: Sections 101(b), 150(f), 151(b), 151(e), 151(f), and Tables No. 1-Z1 through 1-Z16.

3.1 INTRODUCTION

Energy Code

Prescriptive Standards/
Alternative Component Packages
(Section 151(f))

Buildings that comply with the prescriptive standards shall be designed, constructed and equipped to meet all of the requirements of one of the alternative packages of components shown in Tables No. 1-Z1 through 1-Z16 for the appropriate climate zone shown in Figure No. 1-A [see Chapter 1, Figure 1-1]*. Installed components shall meet the following requirements:*

Compliance/
Plan Check

Prescriptive Standards

You can comply with the standards by installing a package of building conservation components and measures making up an *Alternative Component Package*. In this *prescriptive approach*, a building is shown to meet pre-defined levels of various building conservation features. Each measure in the package must be installed in the building to meet or exceed a minimum conservation level.

The packages are the simplest and least flexible compliance path. The only choice involved in the prescriptive approach is the selection of which package to use within the designated climate zone. Each package is generally described by the conservation strategy it emphasizes.

Energy Code

Prescriptive Packages (Section 151(f), footnote 1 to Tables No. 1-Z1 through 1-Z16)

Package A is a passive solar design requiring a significant amount of south facing glazing, a small amount of non-south facing glazing, and a large area of thermal mass. Package B allows a small area of glazing, with light and heavy mass wall alternatives; some zones require continuous infiltration barriers and air-to-air heat exchangers. Package C is the only package that allows electric resistance space heating. Package C may be used only if the building is in an area (1) where natural gas is not currently available and (2) where extension of natural gas service is impractical, as determined by the natural gas utility. Package D allows more glazing area in some zones with moderately high insulation levels; slab edge insulation is required in climate zone 16.

Compliance/
Plan Check

Prescriptive Packages

Package A employs a passive solar strategy requiring a significant amount of south glass, a small amount of nonsouth glass and a large area of exposed thermal mass. It is also characterized by moderate insulation levels and shading in several climate zones.

Package B was originally designed as a package that would not require minimum amounts of thermal mass. It allows a fairly small area of fenestration and requires shading in some climate zones. Most climate zones require R-19 wall insulation. Light mass and heavy mass wall R-value requirements are available as alternatives to the frame wall insulation requirements. Continuous infiltration barriers and air-to-air heat exchangers are also required in Climate Zones 1, 14, 15 and 16.

Package C is the only package that allows electric-resistance space heating. The package may be used *only* where natural gas is not available and where the natural gas utility has determined that providing natural gas service is impractical. It requires very high insulation levels and other features to offset the inefficiency of the electric-resistance space heating. Among its other features are high performance fenestration products with maximum U-values of either 0.50 or 0.40, plus additional shading. Electric-resistance water heating may be used in conjunction with a solar water-heating system or a wood stove boiler.

Package D requires moderately high insulation levels for more window area in most climate zones. Maximum U-values for fenestration products (windows + framing) are either 0.75, 0.65 or 0.60 with colder climates requiring the lower U-value. Shading requirements vary from no shading required in mild-to-cool climates to a maximum 0.40 solar heat gain coefficient (SHGC) for the fenestration product on some or all nonnorth-facing windows in warm climates. Only climate zone 16 requires slab edge insulation.

Package E no longer exists. It was originally designed as a package tailored to raised floor buildings with a lower amount of thermal mass required than for a slab floor building. With the elimination of thermal mass requirements for Package D, Package E was identical to Package D and was therefore eliminated.

3.2 PACKAGE REQUIREMENTS

Energy Code

Insulation (Section 151(f)1.)

A. Ceiling, wall, slab floor perimeter, and raised floor insulation shall be installed which has an R-value equal to or higher than that shown in Tables No. 1-Z1 through 1-Z16. The minimum opaque ceiling, wall (including heated basements and crawl spaces), and raised floor R-values shown are for insulation installed between wood framing members.

ALTERNATIVE to Section 151(f)1.A: *The insulation requirements of Tables No. 1-Z1 through 1-Z16 may also be met by ceiling, wall, or floor assemblies that meet equivalent minimum R-values that consider the effects of all elements of the assembly, using a calculation method approved by the Executive Director.*

EXCEPTION to Section 151(f)1.A: *Raised floor insulation may be omitted if the foundation walls are insulated to meet the wall insulation minimums shown in Tables No. 1-Z1 through 1-Z16, a vapor barrier is placed over the entire floor of the crawl space, and the vents are fitted with automatically operated louvers.*

B. The minimum depth of concrete-slab floor perimeter insulation shall be 16 inches or the depth of the footing of the building, whichever is less.

EXCEPTION to Section 151(f)1.B: *Perimeter insulation is not required along the slab edge between conditioned space and the concrete slab of an attached unconditioned enclosed space, covered porches, or covered patios.*

Compliance/
Plan Check

Insulation

The minimum insulation requirements for the packages assume insulation, such as batt insulation, penetrated by wood framing. If the insulation used is not penetrated by framing (e.g., rigid insulation applied to the outside of an assembly), the assembly may comply with the minimum requirements by meeting a U-value equivalent to an assembly with batt insulation. For example, an R-19 wall may be achieved with either R-19 batt insulation set within 2 x 6 framing, or with R-11 batt insulation placed between 2 x 4 framing plus a minimum of R-4.61 rigid insulation applied to the outside of the framing (see Appendix H, page H-12, Reference Name: W.19.EQ1).

NOTE:

R-value is a minimum; U-value (the inverse of R) is a maximum. The higher the R-value the more energy efficient; the lower the U-value the more energy efficient.

See the *Glossary* for definition of *R-Value* and *U-Value*.

Ceiling Insulation

Prescriptive compliance of a wood-frame ceiling can be shown by specifying the minimum R-value indicated in the selected package.

For metal framing or as an alternative to meeting the installed R-value, document the U-value as specified in Chapter 2, Part 2.3. The U-value of the proposed ceiling assembly must be *less than or equal to* the U-value of a wood-frame ceiling assembly with the minimum R-value installed.

Ceiling Assembly U-values, Wood Frame

Insulation	Framing/Spacing	U-value
R-30	2 x 12 / 16” o.c.	0.034
R-30	2 x 10 / 16” o.c.	0.036
R-30	2 x 4 / 24“ o.c.	0.031
R-38	2 x 14 / 16” o.c.	0.028
R-38	2 x 12 / 16” o.c.	0.030
R-38	2 x 4 / 24” o.c.	0.024
R-49	2 x 4 / 16” o.c.	0.019
R-49	2 x 4 / 24” o.c.	0.019

Framed Wall Insulation

Prescriptive compliance of a wood-frame wall can be shown by specifying the minimum R-value indicated in the selected package.

For metal or steel frame, or as an alternative to meeting the installed R-value, document the U-value as specified in Chapter 2, Part 2.3. The U-value of the proposed wall assembly must be *less than or equal to* the U-value of a wood-frame wall assembly with the minimum R-value installed.

Wall Assembly U-values, Wood Frame

Insulation	Framing/Spacing	U-value
R-13	2 x 4 / 16” o.c.	0.088
R-13	2 x 4 / 24” o.c.	0.085
R-19	2 x 6 / 16“ o.c.	0.065
R-19	2 x 6 / 24” o.c.	0.063
R-21	2 x 6 / 16” o.c.	0.059
R-21	2 x 6 / 24” o.c.	0.056
R-25	2 x 6 / 16” o.c.	0.046
R-29	2 x 4 / 16” o.c.	0.035

Straw bales that are 23 inches by 16 inches and that have stucco or plaster on the inside and outside vertical surfaces are assumed to have a thermal resistance of R-30. Performance data on other sizes of bales was not available at the time of publication of this manual.

Metal framed assemblies will require rigid insulation in order to meet the maximum U-value.

Steel Frame Wall U-values*

Wall	Rigid Insulation	Framing/ Spacing	U-value
R-13	0	2 x 4 / 16	0.195
R-13	7	2 x 4 / 16	0.081
R-13	5.25	2 x 4 / 24	0.087
R-15	7	2 x 4 / 24	0.074
R-19	5.25	2 x 6 / 16	0.064
R-19	5.25	2 x 6 / 24	0.060

*Additional assemblies in Appendices G and H.

Energy Code

Mass Wall Insulation (Section 151(f), footnote 2 to Tables No. 1-Z1 through 1-Z16)

The heavy mass wall R-value in parentheses is the minimum R-value for the entire wall assembly if the wall weight exceeds 40 pounds per square foot. The light mass wall R-value in brackets is the minimum R-value for the entire assembly if the heat capacity of the wall meets or exceeds the result of multiplying the bracketed minimum R-value by 0.65. Any insulation installed on heavy or light mass walls must be integral with or installed on the outside of the exterior mass. The inside surface of the thermal mass, including plaster or gypsum board in direct contact with the masonry wall, shall be exposed to the room air. The exterior wall used to meet the R-value in parentheses cannot also be used to meet the thermal mass requirement.

Compliance/ Plan Check

Mass Wall Insulation

Mass Wall Insulation

Mass walls meet the specified R-value depending on the weight of the wall (unframed walls are not required to meet the minimum mandatory wall insulation requirements of Section 150(c)). The R-value listed in Tables No. 1-Z1 through 1-Z16 is the minimum R-value for the entire wall assembly, including insulation and both interior and exterior air films.

Footnote 2 to the Alternative Component Packages, describes the installation requirements. Specifically, the insulation must be integral with or part of the masonry material or installed on the outside of the exterior mass. The inside surface of thermal mass, including plaster or gypsum board in direct contact with the masonry wall, must be exposed to the room air. The exterior wall used to meet the specified R-value cannot also be used to meet the thermal mass requirements of Package A or C.

Footnote 2 also describes how to differentiate between a heavy and light mass wall to determine the required R-value. The values in parenthesis or brackets are for the entire wall assembly.

- A heavy mass wall has a weight exceeding 40 pounds per square foot.
- A light mass wall is one where the *heat capacity* of the wall meets or exceeds the result of multiplying the bracketed minimum R-value by 0.65.

Energy Code

Heat Capacity (HC) (Section 101(b))

" . . . the amount of heat necessary to raise the temperature of all the components of a unit area in the assembly one degree F. It is calculated as the sum of the average thickness times the density times the specific heat for each component, and is expressed in Btu per square foot per degree F.

Thermal Mass Properties		
Material	Density (lb/ft^3)	Specific Heat (Btu/lb-ºF)
Adobe	120	0.20
Heavy Concrete	140	0.20
Lightweight Concrete	85	0.20
Gypsum	50	0.26
Masonry Veneer	127	0.20
Masonry Infill	120	0.20
Concrete Masonry Unit	105	0.20
Grouted Concrete Masonry Unit	134	0.20
Stucco	105	0.20
Tile in Mortar	120	0.20
Solid Wood (fir)	32	0.33

Where the Package indicates "N/A" for a mass wall, the assembly must comply with insulation requirements described above for "framed wall insulation."

Examples

Mass Wall Insulation

Example 3-1

As defined above

HC = average thickness (in feet) x density x specific heat

A log wall with an average thickness of 6 inches (= 0.5 ft.) has a heat capacity of:

HC = 0.5 ft x 32 lb/ft^3 x 0.33 Btu/lb-°F = 5.28 Btu/ft^2-°F

For compliance with Alternative Component Package B in climate zone 16, a light mass wall is one with a required R-value of 7.5 and a heat capacity more than or equal to (see above footnote 2 to Tables No. 1-Z1 through 1-Z16):

HC_{min} = 0.65 x 7.5 = 4.875

Since this wall has 5.28 heat capacity, which is more than 4.875, it qualifies as light mass. It must have a 7.5 overall R-value for the wall in order to comply with Package B in climate zone 16 (see Table No. 1-Z16 in Part 3.4).

See Appendix B for a listing of materials to determine the R-value of the wood and whether additional insulation is required to meet the R-7.5.

Compliance/ Plan Check

Insulation (continued)

Raised Floor Insulation

Prescriptive compliance of a wood-frame raised floor can be shown by specifying the minimum R-value indicated in the selected package.

For metal framing, or as an alternative to meeting the installed R-value, document the U-value as specified in Chapter 2, Part 2.3. The U-value of the proposed floor assembly must be *less than or equal to* the U-value of a wood-frame floor assembly with the minimum R-value installed.

Floor Assembly U-values, Wood Frame			
Insulation	Framing/Spacing	Crawl Space	U-value
R-13	2 x 6 / 16" o.c.	NO	0.064
R-13	2 x 6 / 16" o.c.	YES	0.046
R-19	2 x 8 / 16" o.c.	NO	0.048
R-19	2 x 8 / 16" o.c.	YES	0.037
R-21	2 x 8 / 16" o.c.	NO	0.045
R-21	2 x 8 / 16" o.c.	YES	0.035
R-30	2 x 10 / 16" o.c.	NO	0.034
R-30	2 x 10 / 16" o.c.	YES	0.028

Concrete Raised Floor Insulation

When the selected Alternative Component Package requires raised-floor insulation, the requirement may be met by installing insulation with the required R-value or by meeting an equivalent U-value for all components of the floor assembly.

Where the package indicates "N/A" for concrete raised floor insulation, no insulation is required.

Below Grade Wall Insulation

When a conditioned space will have concrete walls that are below grade, Alternative Component Package D in climate zone 16 requires R-13 insulation. (Unframed walls do not meet the minimum mandatory insulation requirements of Section 150(c).)

Where the package indicates “N/A” for concrete raised floor insulation, no insulation is required.

Construction Insulation

- All insulation levels must meet or exceed the levels indicated on the CF-1R form, which must be on the plans. Insulation levels must also be indicated on the plans independently of the CF-1R.
- The frame type of the envelope must match that specified on the CF-1R form.
- After installing the insulation, it is the installing contractor’s responsibility to complete the Insulation Certificate (IC-1) and either post it at the job site or make it available to the inspector at appropriate inspections.

Raised Floor Insulation

Exterior raised-floor insulation shall be installed between floor joists with a means of support that prevents the insulation from falling, sagging or deteriorating. Two approaches that accomplish this are:

- Nailing insulation hangers 18 inches apart prior to rolling out the insulation. Hangers are heavy wires up to 48 inches long with pointed ends which provide positive wood penetration.
- Attaching wire mesh to form a basket between joists to support the insulation. The mesh is nailed or stapled to the underside of the joists.

The standards exempt the installation of raised-floor insulation if three conditions are met: (1) the foundation walls are insulated to meet the wall insulation minimums of the package, (2) a vapor barrier is placed over the entire floor of the crawl space and (3) the vents are fitted with automatically operated louvers. (See also *Controlled Ventilation Crawl Space* in Appendix G, the *Glossary*.)

Slab Floor Perimeter Insulation

When slab-edge insulation is required, the insulation must be installed to a maximum depth of 16 inches or to the bottom of the footing, whichever is less. The depth is measured from the top of the insulation, as near the floor line as practical, to the bottom edge of the insulation.

Perimeter insulation is not required along the slab edge between conditioned space and the concrete slab of an attached unconditioned enclosed space, covered porches or covered patios. Neither would it be practical or necessary to insulate concrete steps attached to the outside slab edge.

In situations where the slab is below grade and slab-edge insulation is being applied to a basement or retaining wall, the top of the slab-edge insulation should be placed as near to ground level as possible and extended down 16 inches. In situations where slab is above grade and slab edge is being applied, the top of the slab-edge insulation should be placed at the top of the slab.

Slab-edge insulation should be protected from physical damage and ultraviolet light exposure. Protection of the slab-edge insulation is important because deterioration from moisture, pest infestation, ultraviolet light exposure and other physical degradation can significantly reduce the effectiveness of the insulation.

The insulating material must meet the specifications of Section 150(l) as explained in Chapter 2, Part 2.3.

Inspection Insulation

Check the Certificate of Compliance (CF-1R) form for the required insulation levels and frame type. Check the Insulation Certificate (IC-1) for consistency with the CF-1R. Check that

insulation is installed in all wall cavities including narrow cavities between framing members at windows and doors. Check for complete and uniform installation of insulation in all parts of ceilings.

Energy Code

Glazing/Fenestration U-value (Sections 101(b), 151(f)2.A. and 151(e)5)

Section 101(b)

FENESTRATION PRODUCT is any transparent or translucent material plus any sash, frame, mullions, and dividers, in the envelope of a building, including, but not limited to: windows, sliding glass doors, french doors, skylights, curtain walls, garden windows, and other doors with a glazed area of more than one-half of the door area.

Section 151(f)2.A.

Installed fenestration products shall have U-values equal to or lower than those shown in Tables No. 1-Z1 through 1-Z16. The U-value of installed fenestration products shall be determined pursuant to Section 151(e)5.

Section 151(e)5

The U-value of installed manufactured fenestration products shall be those certified by an approved independent certification organization in accordance with Section 116. The U-value of field-fabricated fenestration products shall be those values from Section 116, Table No. 1-D, based on an approved method that determines the area weighted average U-value for generic types of products.

Compliance/ Plan Check

Glazing/Fenestration U-value

Each Alternative Component Package establishes a maximum U-value for all the fenestration products in the building. This includes skylights, doors with more than one-half the door area as glass, and windows. Weight averaging of U-values is not permitted.

Each window, glass door or skylight must have a U-value less than or equal to that specified in the selected package. If any of the fenestration products has a higher U-value, the building does not comply with the prescriptive approach.

Refer to Chapter 2, Part 2.3 for a full discussion of mandatory requirements and default U-values of fenestration products.

Construction

Glazing/Fenestration U-value

The U-value of fenestration being installed must be *equal or lower than* what is specified on the plans and CF-1R. In the prescriptive approach, weight averaging is not permitted. All products must be *less than or equal to* the value specified in the Alternative Component Package selected.

An Installation Certificate (CF-6R) is completed for the fenestration products installed.

Inspection

Glazing/Fenestration U-Value

Check the Certificate of Compliance (CF-1R) form for the required fenestration U-value. Compare this against the CF-6R for the U-value of installed products.

Energy Code

Maximum Glazing Area (Section 151(f)2.)

B. Total glazing area shall not exceed the percentage of conditioned floor area specified in Tables No. 1-Z1 through 1-Z16.

C. For Package A, the south-facing glazing area percentage (glass area/conditioned floor area) shall not be less than the percentage in Tables No. 1-Z1 through 1-Z16. South-facing glazing includes glazing in ceilings which is horizontal, tilted to the south, or tilted in any other direction at a pitch less than 1:12. North, east and west-facing glazing includes glazing in ceilings

which is tilted at a pitch of 1:12 or greater to the north, east and west, respectively

Compliance/
Plan Check

Maximum Glazing Area

Alternative Component Packages B, C and D, limit the total area of fenestration products in the building without regard for the orientation of the glass. This maximum is expressed as a percent (%) representing the total area of fenestration products (in square feet) divided by the total conditioned floor area, then multiplying by 100 (see *Fenestration Area* in the *Glossary*).

$$\frac{\text{Fenestration (sq.ft.)}}{\text{Floor Area (sq.ft.)}} \times 100 = \%\ \text{fenestration}$$

Package A has no maximum for fenestration area, but instead has fenestration orientation requirements.

Maximum Total Nonsouth-Facing Area

Only Package A places a limit on the total area of fenestration that does *not* face south. This value is fixed at 9.6 percent of the floor area in all climate zones, and is not applicable to the other packages.

Minimum South-Facing Area

Only Package A requires a *minimum* of 6.4 percent of the floor area as fenestration facing south in all climate zones. The *maximum* amount of south-facing area is limited by the amount of thermal mass in the building, as defined in Section 151(f)4 of the standards. This requirement is not applicable to the other packages.

Skylights

Within Package A only, a skylight with a slope equal to or less than 1 in 12 (less than 15°) is considered horizontal but is treated as south facing for shading and glazing area requirements. For other packages, glazing installed on a slope of 1:12 or less is part of the total glazing area and has a vertical orientation. For all packages, a skylight installed on a surface with a pitch or tilt of greater than 1 in 12 (greater than or equal to 4.76° from horizontal) is treated as having the orientation of the tilted surface.

Construction

Maximum Glazing Area

The area of glass shown on the CF-1R is the maximum amount that can be installed without demonstrating that the total area of glass in the building is within the percentage allowed by the package used for compliance. (With Package A, south-facing glass cannot be less than specified on the CF-1R.)

Complete the fenestration portion of the CF-6R.

Inspection

Maximum Glazing Area

Compare the installed glass area both visually and as indicated on the CF-6R with the allowed glass areas indicated on the CF-1R. If more glass is installed, it must be demonstrated that the building does not exceed the glass area allowed by the prescriptive approach. Without such proof, the building is not in compliance with the standards.

With Package A, south-facing glass cannot be less than specified on the CF-1R.

Energy Code

Shading (Section 151(f)3)

Where Tables No. 1-Z1 through 1-Z16 require a solar heat gain coefficient of 0.40 or lower for south-facing, east-facing, or west-facing shading, the requirements shall be met by either:

A. A fenestration product listed by the manufacturer to have the required solar heat gain coefficient; or

B. An exterior operable louver or other exterior shading device that meets the required solar heat gain coefficient; or

C. A combination of exterior shading device and fenestration product to achieve the same performance as achieved in A.

D. The shading requirements for south-facing glazing may also be met by optimal overhangs installed so that the south-facing glazing is fully shaded at solar noon on August 21 and substantially exposed to direct sunlight at solar noon on December 21.

Except where the UBC requires emergency egress, exterior shading devices must be permanently attached to the outside of the structure with fasteners that require additional tools to remove (as opposed to clips, hooks, latches, snaps or ties).

Introduction

Shading

The solar heat gain coefficient (SHGC) is a measure of the effectiveness of a glass and shade assembly in stopping heat gain from solar radiation (see *Shading* in the *Glossary*). SHGCs are fractional values that range between 0 and 1. A *higher value indicates less shading effectiveness* with a greater amount of solar radiation penetrating the combined glazing/ frame/shade assembly and absorbed as heat. *A lower SHGC value corresponds to better shading effectiveness* with less solar gain making its way into the building.

Compliance/
Plan Check

Shading

Shading is required in some climate zones in certain orientations. SHGCs listed for the prescriptive packages represent maximum values not to be exceeded, for movable shading devices or intrinsic shading properties of the fenestration product. In some packages, “NR” is indicated. No specific shading needs to be installed.

The requirements for SHGCs of 0.40 or less may be met by a window, skylight or other fenestration unit that the manufacturer certifies to have the required SHGC, or by installing an exterior shading device, or by some combination of the two.

> NOTE:
>
> Interior shading devices may *not* be used to achieve compliance with the required SHGC.

To determine compliance with prescriptive requirements for a maximum SHGC, options include constructing an optimal overhang (see below) or using a value from:

- Chapter 2, Table 1-E, of this manual for default SHGC values for fenestration products.
- Product literature for the proposed fenestration product(s) showing a value equal or lower than required by the Alternative Component Package selected.
- Table 3-1 for SHGC values of exterior shading devices.
- Form S calculations showing the combined $SHGC_{shade\ open}$ is less than the target value of 0.39 for the proposed fenestration and one of the exterior devices listed in Table 3-1. This target value is determined from a Form S calculation for an $SHGC_{fenestration}$ of 0.40 with default bugscreen exterior shading. Refer to *Shading* in the *Glossary* for an explanation of how to calculate a Form S SHGC for different combinations of exterior devices and glass types.

> NOTE:
>
> To gain credit for exterior shades, they must be permanently attached to the outside of the residence with fasteners that require additional tools to remove (as opposed to clips, hooks, latches, snaps or ties). Exterior shades on windows or skylights that are prohibited by the UBC from being permanently attached for emergency egress reasons are exempt from this requirement.

Table 3-1: Allowed Solar Heat Gain

Coefficients Used for Form S

Exterior Shading Device	SHGC
Bug Screen (default)	0.76
Woven SunScreen	0.30
Louvered SunScreen	0.27
Low Sun Angle Sunscreen	0.13
Roll-down Awning	0.13
Roll -down Blinds or Slats	0.13
None (skylights only/skylight default)	1.00

Optimal Overhangs

Shading requirements for south glazing can also be met by installing any overhang that completely shades the glazing at solar noon on August 21st and substantially exposes the glazing to direct sunlight at solar noon on December 21st. Any well-designed overhang, designed to meet this performance specification, may be used when shading is required for south glazing.

Skylights

Within Package A only, a skylight with a slope equal to or less than 1 in 12 (less than 15°) is considered horizontal and is treated as south facing for shading and glazing area requirements. For all packages a skylight with a pitch of greater than 1 in 12 (greater than or equal to 4.76° from horizontal) is treated as having the orientation of the tilted surface.

Construction

Shading

When shading is required, it is specified on the CF-1R form which must be on the plans and must be constructed or installed as specified for the building to be in compliance with the prescriptive approach. The only alternative to installing an exterior shading device or constructing an overhang used to achieve compliance is to install a fenestration product with an equal or lower SHGC value as specified on the CF-1R.

Inspection

Shading

With the prescriptive approach, there are two options for compliance:

- Shading devices or overhangs specified on the CF-1R must be installed.
- Install a fenestration product with an equal or lower SHGC value as shown on the CF-1R.

Energy Code

Thermal Mass (Section 151(f)4)

Thermal mass required for Packages A and C in Tables No. 1-Z1 through 1-Z16 shall meet or exceed the minimum interior mass capacity specified in Table No. 1-U.

TABLE NO. 1-U
Interior Mass Capacity Requirements for Packages A and C

Package	***Minimum Interior Mass Capacity***
A	*35.9 X South Glazing Area (ft²)*
C (slab floor)	*2.36 X Ground Floor Area (ft²)*
C (raised floor)	*0.18 X Ground Floor Area (ft²)*

The mass requirements in Table No. 1-U may be met by calculating the combined interior mass capacity of the mass materials using Equation No. 1-P.

EQUATION NO. 1-P
CALCULATION OF INTERIOR MASS CAPACITY

$$IMC = [(A_1 \times UIMC_1) + (A_2 \times UIMC_2) .....+ (A_n \times UIMC_n)]$$

Where,

A_n = *Area of mass material n, and*
$UIMC_n$ = *Unit Interior Mass Capacity of mass material n*

NOTE: *The Commission's Residential Manual lists the Unit Interior Mass Capacity (UIMC) of various mass materials.*

Introduction

Thermal Mass

Thermal mass stores heat as a house warms and slowly releases the stored heat as the house cools. This helps moderate temperature variations within the space and reduces the need to use heating and cooling equipment. Typical materials that are most effective as thermal mass include: concrete, tile, brick and other materials with high ***Unit Interior Mass Capacities (UIMC)*** as listed in Tables 3-2a, 3-2b and 3-3.

Compliance/ Plan Check

Thermal Mass

Thermal Mass is NOT required for Package D, but thermal mass is required for compliance with Packages A and C. Table No. 1-U above lists the minimum Interior Mass Capacity required for these packages.

Note that the Package A mass requirement is based on the south fenestration area and does not vary by floor type, while Package C requirements are based on the building Ground Floor Area and the floor type. See the *Glossary* for the definition of *Ground Floor Area* for slab and raised-floor buildings.

The *Interior Mass Capacity (IMC)* of a material is calculated by multiplying its *Area* times its *Unit Interior Mass Capacity (UIMC)*. Tables 3-2a and 3-2b list the UIMCs for a number of thermal mass materials. The prescriptive thermal mass requirements may be met by adding the IMCs of all mass elements in the building.

This method allows for multiple mass types in both raised-floor and slab-on-grade construction. The Thermal Mass Worksheet (WS-1R) works through Equation No. 1-P to calculate the IMC. On the WS-1R, describe each interior mass surface and enter its area and UIMC value. (See Tables 3-2a, 3-2b and 3-3). For each surface, multiply the surface area by the UIMC and add the results of all mass elements.

NOTE:

The inside surface of an exterior mass wall is counted as interior thermal mass and is included as part of the IMC calculation using Table 3-3.

Slab Floor Interior Mass

The interior mass requirement for Package C slab-floor buildings is comparable to having 20 percent of the *ground floor slab area* exposed to the conditioned space. This assumes a standard 140 lb/ft^3 concrete slab at least 3.5 inches thick. A Package C slab-floor building may meet its thermal mass requirement by either calculating the IMC of all of the mass elements in the building, or by exposing 20 percent of a 3.5-inch concrete slab.

Table G-15 contains a complete list of floor coverings that qualify as *exposed* mass. This list includes brick, ceramic tile, stamped concrete (acceptable in any location) and vinyl tile, sheet vinyl and unfinished concrete (only when located in kitchens, dining areas, pantries, bathrooms, laundry rooms, service porches and entries).

Raised Floor Interior Mass

The interior mass requirement for Package C raised-floor buildings is based on having mass equivalent in performance to five percent of the ground floor area consisting of exposed two-inch thick concrete slab with a volumetric heat capacity of 28, a conductivity of 0.98, a surface conductance of 1.3 and no thermal resistance on the surface. The heat capacity and conductivity performance equivalent referred to is that of standard 140 lb/ft^3 concrete.

Table 3-2a: Interior Mass UIMC Values:
Interior Mass[11] - Surfaces Exposed on One Side[13]

Material	Surface Condition	Mass Thickness (inches)	Unit Interior Mass Capacity
Concrete Slab-on-Grade and Raised Concrete Floors	Exposed[1]	2.00	3.6
		3.50	4.6
		6.00	5.1
	Covered[2]	2.00	1.6
		3.50	1.8
		6.00	1.9
Lightweight Concrete[9]	Exposed	0.75	1.0
		1.00	1.4
		1.50	2.0
		2.00	2.5
	Covered	0.75	0.9
		1.00	1.0
		1.50	1.2
		2.00	1.4
Solid Wood[9]	Exposed	1.50	1.2
		3.00	1.6
Tile[3,9]	Exposed	0.50	0.8
		1.00	1.7
		1.50	2.4
		2.00	3.0
Masonry[4,9]	Exposed	1.00	2.0
		2.00	2.7
		4.00	4.2
Adobe[9]	Exposed	4.00	3.8
		6.00	3.9
		8.00	3.9
Framed Wall	0.50" Gypsum	na	0.0
	0.63" Gypsum	na	0.1
	1.00" Gypsum	na	0.5
	0.88" Stucco	na	1.1
Masonry Infill[7]	0.50" Gypsum	3.50	1.3

Table 3-2 continued on next page.

Table 3-2b: Interior Mass UIMC Values:
Interior Mass[11] - Surfaces Exposed on Two Sides[5, 13]

Material	Surface Condition	Mass Thickness (inches)	Unit Interior Mass Capacity
Partial Grout Masonry[4]	Exposed[1]	4.00	6.9
		6.00	7.4
		8.00	7.4
Solid Grout Masonry[4,6]	Exposed	4.00	8.3
		6.00	9.2
		8.00	9.6
Adobe	Exposed	4.00	7.6
		12.00	7.8
		16.00	7.6
Solid Wood/ Logs	Exposed	3.00	3.3
		4.00	3.3
		6.00	3.3
		8.00	3.3
Framed Wall	0.50" Gypsum	na	0.0
	0.63" Gypsum	na	0.2
	1.00" Gypsum	na	0.9
	0.88" Stucco	na	2.1
Masonry Infill[7]	0.50" Gypsum	3.50	2.6

Notes follow Table 3-3.

Table 3-3: Exterior Wall Mass UIMC Values and Exterior Mass Factors[13]

Material	Surface Condition	Mass Thickness (inches)	Wall U-value	Unit Interior Mass Capacity	Exterior[8] Mass Factor
Partial Grout Masonry[4]	Exposed[1]	4.00	0.68	0.9	1.1
			0.58	1.0	1.0
		6.00	0.54	1.3	1.3
			0.44	1.5	1.1
		8.00	0.49	1.5	1.3
			0.38	1.7	1.2
	Furred[10]	4.00	0.40	0.5	0.9
			0.30	0.5	0.7
			0.20	0.5	0.5
			0.10	0.5	0.3
			0.08	0.5	0.2
		6.00	0.40	0.9	1.2
			0.30	0.6	1.0
			0.20	0.5	0.7
			0.10	0.5	0.4
			0.08	0.5	0.3
		8.00	0.30	0.8	1.0
			0.20	0.5	0.7
			0.10	0.5	0.4
			0.08	0.5	0.3
Solid Grout Masonry[4,6]	Exposed	4.00	0.79	1.0	1.4
		6.00	0.68	1.5	1.9
		8.00	0.62	1.8	2.1
	Furred[10]	4.00	0.40	0.5	1.0
			0.30	0.5	0.8
			0.20	0.5	0.6
			0.10	0.5	0.3
			0.08	0.5	0.3
		6.00	0.40	0.7	1.4
			0.30	0.5	1.1
			0.20	0.5	0.7
			0.10	0.5	0.4
			0.08	0.5	0.3
		8.00	0.40	0.8	1.5
			0.30	0.6	1.2
			0.20	0.5	0.8
			0.10	0.5	0.4
			0.08	0.5	0.3

Table 3-3 continued on next page

Table 3-3: Exterior Wall Mass UIMC Values and Exterior Mass Factors[13]

Material	Surface Condition	Mass Thickness (inches)	Wall U-value	Unit Interior Mass Capacity	Exterior[9] Mass Factor
Solid Wood/ Logs	Exposed[1]	3.00	0.22	0.7	0.5
		4.00	0.17	0.9	0.6
		6.00	0 .12	1.1	0.6
		8.00	0.093	1.2	0.4
		10.00	0.075	1.3	0.3
		12.00	0.063	1.3	0.3
Wood Cavity Wall[12]	Exposed	3.00[12]	0.11	1.1	0.5
			0.065	1.3	0.3
			0.045	1.4	0.2
Adobe	Exposed	8.00	0.35	2.1	1.5
		16.00	0.21	2.8	0.8
		24.00	0.15	3.1	0.5
Masonry Veneer[4]	Framed Wall	4.00	0.10	na	0.3
			0.08	na	0.3
			0.06	na	0.2
Adobe Veneer	Framed Wall	4.00	0.10	na	0.4
			0.08	na	0.3
			0.06	na	0.2

Notes For Tables 3-2 and 3-3

1. "Exposed" means that the mass is directly exposed to room air or covered with a conductive material such as ceramic tile.
2. "Covered" includes carpet, cabinets, closets or walls.
3. The indicated thickness includes both the tile and the mortar bed, when applicable.
4. Masonry includes brick, stone, concrete masonry units, hollow clay tile and other masonry materials.
5. The unit interior mass capacity for surfaces exposed on two sides is based on the area of one side only.
6. "Solid Grout Masonry" means that all the cells of the masonry units are filled with grout.
7. The indicated thickness for masonry infill is for the masonry material itself.
8. Use the Exterior Mass value for calculating Exterior Wall Mass.
9. Mass located inside exterior walls or ceilings may be considered interior mass (exposed one side) when it is insulated on the exterior with at least R-11 insulation, or a total resistance of R-9 including framing effects.
10. "Furred" means that 0.50-inch gypsum board is placed on the inside of the mass wall separated from the mass with insulation or an air space.
11. When mass types are layered, e.g. tile over slab-on-grade or lightweight concrete floor, only the mass type with the greatest interior mass capacity may be accounted for, based on the total thickness of both layers.
12. This wall consists of 3 inches of wood on each side of a cavity. The cavity may be insulated as indicated by the U-value column.
13. Values based on properties of materials listed in 1993 *ASHRAE Handbook of Fundamentals.*

Examples

Thermal Mass

Example 3-2: Package A Thermal Mass

A 2,000 ft^2 residence in Climate Zone 12 meets most of the requirements needed to comply with Package A, but the owner still needs to determine whether or not the proposed design has enough thermal mass.

It has 160 ft^2 of south fenestration (a minimum of 6.4 percent or 128 ft^2 is required), so the required minimum IMC (using the equation from Section 151(f)4, Table No. 1-U above) is:

$IMC_{Required} = 35.9 \times 160 = 5744$

The house is a one-story, slab on grade construction with 700 ft^2 of 3.5" thick slab on grade finished with 1/4" wood veneer glued directly to the concrete. This counts as exposed slab (see Table G-15) and has a UIMC of 4.6 from Table 3-2a. The remaining 1300 ft^2 of the slab is carpeted, or covered with cabinets or walls, and is counted as covered slab on grade. It has a UIMC of 1.8. The IMC for the entire slab on grade equals:

$IMC_{Proposed} = (700 \times 4.6) + (1300 \times 1.8)$
$= 5560$

This does not meet the IMC requirement, but if the exposed mass area is increased to 800 ft^2 then:

$IMC_{Proposed} = (800 \times 4.6) + (1200 \times 1.8)$
$= 5840$

5840 is greater than the required 5744, so the building meets the Package A thermal mass requirements. Additional mass credit could also be gained by adding other mass materials, such as tile in a mortar base on the kitchen counters.

Example 3-3: Package C Thermal Mass

A 2,000 ft^2, two-story residence in Climate Zone 16 meets all the requirements needed to comply with Package C, but the designer must determine whether the house meets the thermal mass requirement. There are 1,200 ft^2 on the ground floor, and 800 ft^2 on the second floor. The required minimum interior mass capacity is:

$IMC_{Required} = 0.18 \times 1200 = 216$

The living room has fireplace with 115 ft^2 of one-inch thick masonry veneer. This counts as exposed interior mass and has a UIMC of 2.0 from Table 3-2a. So the interior mass capacity of the exposed masonry veneer is:

$IMC_{Proposed} = 115 \times 2.0 = 230$

Since 230 is grreater than or equal to 216, the masonry veneer meets the IMC requirement.

Construction

Thermal Mass

Check the CF-1R for any thermal mass requirements.

When the CF-1R shows thermal mass was used to achieve compliance with Packages A or C, it is important that the material type and area are consistent with those shown on the form. Changes could result in the building not complying with the prescriptive approach. If this occurs, it is not possible to verify that the building is in compliance with the standards without recalculating the thermal mass compliance or recalculating compliance for the entire building with a different compliance approach.

Inspection

Thermal Mass

With the prescriptive approach, there are three possibilities:

- Thermal mass is consistent with the specifications on the CF-1R for mass materials, including floors covered or exposed, or
- The “as built” thermal mass conditions are checked for compliance with the prescriptive package selected; or

- The calculations are resubmitted to check compliance with a different compliance approach.

Energy Code

Continuous Infiltration Barrier (Sections 151(f)5 and 150(f))

Continuous infiltration barriers required in Tables No. 1-Z1 through 1-Z16 shall be installed over the inside face of framing in ceilings and over the inside or outside face of framing in exterior walls. Where ceilings are plank and beam construction exposed to the conditioned space, the barrier shall be placed on top of the planking, and the wall/ceiling joints shall be sealed with caulking or sealant. All openings in the building envelope for plumbing, electrical conduits and boxes, gas lines and valves, luminaires, ducts, flues and other elements which penetrate the infiltration barrier, shall be sealed with permanent tape or sealant.

Section 150(f)

If an infiltration barrier is installed to meet the requirements of Section 151, it must have an air porosity of less than 5 ft³ per hour per square foot per inch of mercury pressure difference when tested in accordance with the requirements of ASTM E283-91. If a vapor barrier functions as an infiltration barrier it shall be located on the conditioned side of the exterior framing.

Compliance/ Plan Check

Continuous Infiltration Barrier

Package B in Climate Zones 1, 14, 15 and 16 requires the installation of continuous infiltration barriers.

Construction

Continuous Infiltration Barrier

When the CF-1R calls for a continuous infiltration barrier or special infiltration barrier, it must be placed over the inside face of framing in ceilings and over the inside or outside face of framing in exterior walls. Where ceilings are plank and beam construction exposed to the conditioned space, the barrier must be placed on top of the planking; in addition, ceiling joints must be sealed with caulking or other sealant.

Seal, with permanent tape or a sealant, all openings in the infiltration barrier, including spaces around plumbing, electrical conduits and boxes, gas lines and valves, light fixtures, ducts, flues and other elements which penetrate the infiltration barrier.

When a continuous infiltration barrier acts as a vapor barrier, it must be placed on the inside of the insulation. If an infiltration barrier is intended to act as a vapor barrier in Climate Zones 14 and 16, verify that the material and installation procedures used meet the requirements explained in Chapter 2, Part 2.2.

The infiltration barrier must have an air porosity of less than five cubic feet per hour per square foot per inch of mercury pressure difference when tested according to ASTM E-283-91 requirements. See Chapter 2, Part 2.2 for more information on material specifications required by Section 150(f).

Inspection

Continuous Infiltration Barrier

If the CF-1R shows Package B is being used in Climate Zones 1, 14, 15 or 16, an infiltration barrier is required. Installation criteria include:

- In ceilings, the material must be placed over the inside face of framing. Ceiling joints must be sealed with caulking or other sealant. If the ceiling is plank and beam construction, exposed to the conditioned space, the barrier must be placed on top of the planking.
- In exterior walls, the material must be placed over the inside or outside face of framing.
- All penetrations must be permanently sealed or taped.
- The barrier material must be tested to ASTM E-283-91.

Energy Code

Air-to-Air Heat Exchanger (Section 151(f)6)

The air-to-air heat exchanger required in Tables No. 1-Z1 through 1-Z16 shall be capable of ventilating the dwelling unit at a rate equal to at least 0.7 times the volume of the conditioned space per hour.

This requirement may be met by a central mechanical ventilation system with an integral air-to-air heat exchanger or by one or more single package room mechanical ventilators with an integral air-to-air heat exchanger.

Introduction

Air-to-Air Heat Exchanger

An air-to-air heat exchanger uses a mechanical ventilation process in which heat is transferred between the conditioned air being exhausted and the fresh unconditioned air being supplied. This reduces heat losses in the winter and heat gains in the summer.

Compliance/ Plan Check

Air-to-Air Heat Exchanger

Package B in Climate Zones 1, 14, 15 and 16 requires the installation of a mechanical ventilation system with an air-to-air heat exchanger.

Construction

Air-to-Air Heat Exchanger

If the compliance requires an air-to-air heat exchanger, the requirement may be met by a central mechanical ventilation system with an integral air-to-air heat exchanger between intake and exhaust ducts or by one or more single-package room mechanical ventilators, each with an integral air-to-air heat exchanger.

Energy Code

Space Conditioning (Section 151(f)7, 8,and 10)

7. *Heating System Type. Heating system types shall be installed as required in Tables No. 1-Z1 through 1-Z16. A gas heating system is a natural or liquefied petroleum gas heating system. All supply ducts shall either be in conditioned space or be insulated to a minimum installed level of R-4.2.*

8. *Space Heating and Space Cooling. All space heating and space cooling systems must comply with minimum appliance efficiency standards as specified in Sections 110-112.*

10. *Setback Thermostats. All heating systems shall have an automatic thermostat with a clock mechanism or other setback mechanism approved by the Executive Director which the building occupant can manually program to automatically set back the thermostat set points for at least 2 periods within 24 hours. The exception to Section 150(i) shall not apply to any heating system installed in conjunction with the packages specified in Tables No. 1-Z1 through 1-Z16.*

Compliance/ Plan Check

Space Conditioning

All heating systems must also comply with the mandatory measures explained in Chapter 2, including sizing according to design heating loads (see Chapter 2, Part 2.4).

Gas Systems

All packages require that gas space-heating systems meet the minimum *Appliance Efficiency Regulations.* Packages A, B and C additionally specify a minimum of 78 percent Annual Fuel Utilization Efficiency (AFUE). Package D does not specify a minimum efficiency, allowing any gas space-heating device, including noncentral furnaces, to be installed. See *AFUE* in the *Glossary* for a discussion of gas heating efficiency requirements.

Heat-Pump Systems

All heat pumps installed with the prescriptive packages must meet minimum appliance efficiency requirements. Packages A, B and C limit split system air source heat pumps to a Heating Seasonal Performance Factor (HSPF) rating of 6.8 or higher. Single package air source heat pumps must have an HSPF rating of at least 6.6. Package D does not specify a minimum efficiency, allowing any heat pump, including noncentral, to be installed.

Electric Resistance Heating

Electric resistance and electric radiant heating systems are allowed only in Package C. Package C may only be used for compliance if:

- The building is located in an area where natural gas is not currently available; and
- The local natural gas utility determines it is not practical to extend natural gas service to the site.

There are no minimum appliance efficiency standards for electric-resistance or electric-radiant heating systems.

Other Space-Heating Systems

Solar space-heating systems are not recognized within the prescriptive packages.

Wood heat is allowed with prescriptive compliance, provided all conditions as explained in Chapter 8, Part 8.6 are met.

Space Cooling System Type

Air conditioners and the cooling cycle of heat pumps must meet or exceed the Seasonal Energy Efficiency Ratio (SEER) required by Packages A, B and C. The values listed are the minimum established by the *Appliance Efficiency Regulations* for both split system and single package air conditioners or heat pumps. Split system air conditioners must have a minimum SEER of at least 10.0. The minimum SEER requirement for single package air conditioners is 9.7. Package D does not specify a minimum efficiency, allowing any space cooling device, including non-central units, to be installed.

Setback Thermostat

An automatic setback thermostat is required for all heating systems installed with prescriptive compliance. The setback thermostat must be designed so that the building occupant can program different temperature settings for at least two different time periods each day. For example, 68°F during the day and 60°F at night.

NOTE:

There are no exceptions to the automatic setback thermostat requirement with prescriptive compliance.

Ducts

All supply ducts for ducted space-conditioning systems installed with Packages A, B and D must be insulated to a minimum installed level of R-4.2. All ducts installed for Package C must be insulated to a minimum installed level of R-8.

Construction — Space Conditioning

Install:

- Equipment type as specified on the CF-1R
- Equipment efficiency as specified on the CF-1R
- Duct insulation as specified on the CF-1R
- Ducts in accordance with mandatory construction requirements from Chapter 2, Part 2.4

Complete:

Installation Certificate (CF-6R) for installed equipment.

Inspection

Space-Conditioning System

Check the CF-1R for required measures and the CF-6R for installation information. The following are acceptable changes:

- Installing a heat pump instead of gas-heating equipment (Packages A-C have minimum efficiencies).
- Installing gas heating equipment instead of a heat pump (Packages A-C have minimum efficiencies).

Energy Code

Water-Heating Systems
(Sections 151(b)1 and (f)9)

Section 151(f)9:

All water heating systems must meet the water heating budgets calculated from Equation No. 1-N.

NOTE to Section 151(f)8.: Any gas type domestic water heater of 50 gallons or less, which is certified as meeting the Appliance Efficiency Standards, and which meets tank insulation requirements of 150(j) may be assumed to meet the water heating budget.

Section 151(b)1:

The annual water heating budget calculated from Equation No. 1-N may be met by either:

A. Calculating the energy consumption of the proposed water heating system using an approved calculation method without an external insulation wrap or

B. Installing any gas storage type non-recirculating water heating system that does not exceed 50 gallons of capacity, and that meets the minimum standards specified in the Appliance Efficiency Standards.

NOTE: Storage gas water heaters with an energy factor of less than 0.58 must be externally wrapped with insulation having an installed thermal resistance of R-12 or greater in accordance with Section 150(j).

Compliance/ Plan Check

Water Heating Systems

All packages, except Package C, require that the installed water-heating system meet the water-heating energy budget. This means one 50-gallon or less, gas storage type water heater, nonrecirculating. If the energy factor is below 0.58 (i.e., 0.53 - 0.579) an R-12 external insulation blanket is a mandatory requirement.

If the water-heating system is other than described in the previous paragraph, Table 3-4 lists other water-heating systems that have been pre-calculated to meet the water-heating budget for residences of different sizes. Those systems which comply are designated with a "Y"; systems that do not comply are designated with an "N".

NOTE:

Interpolation is not allowed when using Table 3-4. If a water-heating efficiency falls between values on the table, use the lower value.

The remaining alternative is to show compliance with the water-heating budget as explained in Chapter 6. Part 6.3 of Chapter 6 contains forms, instructions, and installation criteria for various water heating and distribution system types.

Package C water-heating system complies if it meets the budget as explained above or by installing an electric-resistance water heater that is:

- Located within the building envelope; and
- Supplemented by either a solar water-heating system or a wood stove boiler which provides at least 25 percent of the residence's water heating requirements. See Chapter 6 for documentation requirements and installation criteria for active and passive solar water-heating systems and wood stove boilers. The wood stove boiler credit is not allowed in Climate Zones 8, 10 or 15, or in other jurisdictions which do not allow wood stoves.

Table 3-4: Water Heating Systems that Meet Package Requirements[1]

One Water Heater - No Auxiliary Credits

Water Heater Type[2]	CZ	Energy Factor	Distribution[3]			Recirc Systems		
			STD	HWR POU	Pipe Insul	No Ctrl	Temp/ Timer	Demd/ Temp
SG50	All	0.53	Y[4]	Y	Y	N[4]	N	Y
		0.63	Y	Y	Y	N	Y	Y
		0.73	Y	Y	Y	Y	Y	Y
SG75	All	0.48	N	Y	N	N	N	N
		0.58	Y	Y	Y	N	N	Y
		0.68	Y	Y	Y	Y	Y	Y
SE	All	0.87	N	N	N	N	N	N
		0.93	N	N	N	N	N	N
IG[6]	All	0.80	Y	Y	Y			
IE	All	0.93	N	N				
H	1,14	1.80	Y	Y	Y	N	N	Y
		2.20	Y	Y	Y	N	Y	Y
		2.60	Y	Y	Y	Y	Y	Y
HP	2-5,12	1.80	Y	Y	Y	N	N	Y
		2.20	Y	Y	Y	N	Y	Y
		2.60	Y	Y	Y	Y	Y	Y
HP	6-11 & 13, 15	1.80	Y	Y	Y	N	N	Y
		2.20	Y	Y	Y	Y	Y	Y
		2.60	Y	Y	Y	Y	Y	Y
HP	16	1.80	N	N	N	N	N	N
		2.20	N	N	N	N	N	N
		2.60	Y	Y	Y	N	N	Y

One Water Heater - Solar Credits

Water Heater Type[2]	CZ	Energy Factor	Distribution[3]			Recirc Systems		
			STD	HWR POU	Pipe Insul	No Ctrl	Temp/ Timer	Demd/ Temp
SG50	All	0.53	Y	Y	Y	Y	Y	Y
		0.63	Y	Y	Y	Y	Y	Y
		0.73	Y	Y	Y	Y	Y	Y
SG75	All	0.48	Y	Y	Y	Y	Y	Y
		0.58	Y	Y	Y	Y	Y	Y
		0.68	Y	Y	Y	Y	Y	Y
SE	All	0.87	N	Y	Y	N	N	Y
		0.93	Y	Y	Y	N	N	Y
IG	All	0.80	Y	Y	Y			
IE	All	0.93	Y	Y				
HP	1,14	1.80	Y	Y	Y	Y	Y	Y
		2.20	Y	Y	Y	Y	Y	Y
		2.60	Y	Y	Y	Y	Y	Y
HP	2-5,12	1.80	Y	Y	Y	Y	Y	Y
		2.20	Y	Y	Y	Y	Y	Y
		2.60	Y	Y	Y	Y	Y	Y
HP	6-11& 13, 15	1.80	Y	Y	Y	Y	Y	Y
		2.20	Y	Y	Y	Y	Y	Y
		2.60	Y	Y	Y	Y	Y	Y
HP	16	1.80	Y	Y	Y	N	N	Y
		2.20	Y	Y	Y	N	Y	Y
		2.60	Y	Y	Y	Y	Y	Y

Two Water Heaters - No Auxiliary Credits

SG50	All	0.53	N	N	N	N	N	N
		0.63	Y	Y	Y	N	N	Y
		0.73	Y	Y	Y	Y	N	Y
SG75	All	0.48	N	N	N	N	N	N
		0.58	N	Y	Y	N	Y	Y
IE	All	0.93	N	N				
HP	1,14	1.80	N	N	N	N	N	N
		2.20	Y	Y	Y	N	N	Y
		0.68	Y	Y	Y	N	Y	Y
SE	All	0.87	N	N	N	N	N	N
		0.93	N	N	N	N	N	N
IG6	All	0.80	N	N	N			
I		2.60	Y	Y	Y	N	Y	Y
HP	4,5,12	1.80	N	Y	N	N	N	Y
		2.20	Y	Y	Y	N	N	Y
		2.60	Y	Y	Y	N	N	Y
HP	6-11 & 13, 15	1.80	N	Y	Y	N	N	Y
		2.20	Y	Y	Y	N	Y	Y
		2.60	Y	Y	Y	Y	Y	Y
HP	16	1.80	N	N	N	N	N	N
		2.20	N	N	N	N	N	N
		2.60	N	N	N	N	N	N

Two Water Heaters - Solar Credit

SG50	All	0.53	Y	Y	Y	N	N	Y
		0.63	Y	Y	Y	Y	Y	Y
		0.73	Y	Y	Y	Y	Y	Y
SG75	All	0.48	N	N	N	N	N	N
		0.58	Y	Y	Y	Y	Y	Y
IE	All	0.93	Y	Y				
HP	1,14	1.80	Y	Y	Y	N	Y	Y
		2.20	Y	Y	Y	Y	Y	Y
		0.68	Y	Y	Y	Y	Y	Y
SE	All	0.87	N	Y	Y	N	N	Y
		0.93	Y	Y	Y	N	N	Y
IG	All	0.80	Y	Y	Y			
		2.60	Y	Y	Y	Y	Y	Y
HP	2-5,12	1.80	Y	Y	Y	Y	Y	Y
		2.20	Y	Y	Y	Y	Y	Y
		2.60	Y	Y	Y	Y	Y	Y
HP	6-11 & 13, 15	1.80	Y	Y	Y	N	Y	Y
		2.20	Y	Y	Y	Y	Y	Y
		2.60	Y	Y	Y	Y	Y	Y
HP	16	1.80	N	N	N	N	N	N
		2.20	N	Y	N	N	N	N
		2.60	Y	Y	Y	N	N	Y

NOTES:

1. The water-heating systems listed here have been pre-calculated to determine compliance with the water-heating budgets (see Note 4). See Chapter 6 for the complete method, including definitions and installation criteria for all system components. **NOTE: All storage tank water heaters with less than 0.58 energy factor are assumed to have R-12 external tank insulation. This insulation is a mandatory requirement for storage tank water heaters with an energy factor between 0.53 and 0.579.** Notes for **Table 3-4** continued on next page

Notes for Table 3-4: (continued) Water Heating Systems that Meet Package Requirements

2. Water heater types: SG50 = Storage gas, 50 gallons or less; SG75 = Storage gas, 51 to 75 gallons, less than 75,000 Btu/hr input; HP = Heat Pump, 50 gallons or less; IG = Instantaneous Gas, pilot loss may not exceed 600 Btu/hr; SE = Storage electric, 50 gallons or less. Note that compliance of heat pump water heaters varies by climate zone. See Chapter 7??.

3. Distribution Systems: STD = Standard; HWR = Hot water recovery; POU = Point of use; Pipe Insul = Pipe insulation credit; Recirculation: NoCtrl = Recirculation system with no controls; Temp/Timer = Recirculation system with either temperature or timer controls; Demand/Temp = Recirculation system with either demand controls, or with a combination time/temperature control. Pipe insulation is required on the entire length of recirculating piping, except when equipped with demand control. See Chapter 6 for installation criteria and definitions.

4. Water-heater systems listed with a "Y" meet the water-heating budget and must be installed with the applicable efficiency and distribution devices used to receive credits. Water heater systems listed with an "N" do not meet standard water-heating budget.

5. Solar credit requires 50 percent solar contribution. See Chapter 7.

6. For instantaneous gas water heaters (IG), the value listed in the Energy Factor column is the Recovery Efficiency (RE).

Construction

Water Heating

Install:

- Equipment type as specified on the CF-1R
- Equipment efficiency as specified on the CF-1R
- Distribution type specified on the CF-1R
- Pipe insulation:
  - » R-2 on the first 5 feet hot and cold for nonrecirculating systems
  - » Entire length of recirculating piping (mandatory except when equipped with demand control)
  - » If “pipe insulation” is indicated, it was used for credit and the entire length of hot water piping must be insulated to R-4 (R-6 if pipe > 2”)

Complete:

Installation Certificate (CF-6R) for installed equipment.

Inspection

Water Heating

Check the CF-1R for required measures and the CF-6R for installation information.

Useful Information

Reference House

Package D is considered the reference house for performance compliance. Approved computer programs model a house with the features of Package D to determine the space-conditioning and water-heating budgets.

Table 3-5 provides the Package D requirements for all 16 climate zones into one table. This can be used as a guide for assessing how a proposed design compares to this package of features.

TABLE 3-5
ALTERNATIVE COMPONENT
PACKAGE D

COMPONENT	Zones 1/16	Zones 2/5	Zones 3-4,6-7	Zones 8-10	Zones 11-13	Zones 14/15
BUILDING ENVELOPE						
Insulation Minimums[2]						
Ceiling	R38	R30	R30	R30	R38	R38
Wood Frame Walls	R21	R13	R13	R13	R19	R21
"Heavy Mass" Walls	(R4.76)	(R2.44)	(R2.44)	(R2.44)	(R4.76)	(R4.76)
"Light Mass" Walls	NA	NA	NA	NA	NA	NA
Below Grade Walls	R0/R13	R0	R0	R0	R0	R0
Slab Floor Perimeter	NR/R7	NR	NR	NR	NR	NR
Raised Floors	R19	R19	R19	R19	R19	R19
Concrete Raised Floors	R8	*	R0	R0	*	*
GLAZING						
Maximum U-value[3]	0.65/0.60	0.65/0.75	0.75	0.75	0.65	0.65
Maximum Total Area	16%	16%	20%	20%	16%	16%
SOLAR HEAT GAIN COEFFICIENT[4]						
South Facing Glazing	NR	NR	NR	NR	NR	NR/0.40
West Facing Glazing	NR	NR	NR	0.40	0.40	0.40
East Facing Glazing	NR	NR	NR	0.40	0.40	0.40
North Facing Glazing	NR	NR	NR	NR	NR	NR
THERMAL MASS[5]	NR	NR	NR	NR	NR	NR
INFILTRATION CONTROL						
Continuous Barrier	NR	NR	NR	NR	NR	NR
Air-to-Air Heat Exchanger	NR	NR	NR	NR	NR	NR
SPACE HEATING						
Electric Rsistant Allowed	NO	NO	NO	NO	NO	NO
If Gas, AFUE =	MIN	MIN	MIN	MIN	MIN	MIN
If Heat Pump HSPF[8] =	MIN	MIN	MIN	MIN	MIN	MIN
SPACE COOLING SYSTEM						
SEER =	MIN	MIN	MIN	MIN	MIN	MIN
DOMESTIC WATER						
System must meet budget, see 151(b)1 and 151(f)9	MEET BDGT	MEET BDGT	MEET BDGT	MEET BDGT	MEET BDGT	MEET BDGT

Concrete Raised Floor = R8 in zones 1, 2, 11, 13, 14 and 16, R4 in zones 12 and 15, R0 in zones 3-9

SEE NOTES FOLLOWING TABLE NO. 1-Z16

3.3 PRESCRIPTIVE COMPLIANCE DOCUMENTATION

Compliance/
Plan Check

Documentation

Documentation of the prescriptive compliance approach is simple. In many cases, the only requirement is to complete a residential Certificate of Compliance (CF-1R) form as explained in Chapter 1, Part 1.3, as well as submit a Mandatory Measures Checklist (MF-1R).

A Form 3R is required to document equivalent assembly R-values if the proposed R-value is not the same or higher than the R-value listed in the package.

Form S, Solar Heat Gain Coefficient (SHGC) Worksheet, is required to document fenestration and exterior shading combinations. When a fenestration product has an SHGC equal or lower to that required by the package, or an exterior device listed in Table 3-1 has an SHGC equal or lower to that required by the package, Form S is not required. Only exterior devices and SHGCs from Table 3-1 may be used in SHGC combination calculations for Form S.

On the CF-1R form, the climate zone and package selected for compliance should be specified. The building features and devices needed to be installed to meet the package requirements are also indicated.

An example of a completed CF-1R is presented in Figures 3-1 and 3-2. Blank copies of the CF-1R and other forms, which can be used with any compliance path, are included in Appendix A.

CERTIFICATE OF COMPLIANCE: RESIDENTIAL (Page 1 of 2) CF-1R

Garcia Residence — Project Title
July 1, 1999 — Date
5432 State Street, Fresno, CA — Project Address
FRED JONES — Documentation Author
(916)654-5106 — Telephone
PACKAGE D — Compliance Method (Package or Computer)
13 — Climate Zone

Building Permit #
Plan Check / Date
Field Check / Date
Enforcement Agency Use Only

GENERAL INFORMATION

Total Conditioned Floor Area 2010 ft²
Conditioned Slab Floor Area 1710 ft²
Average Ceiling Height: 9.2 ft

Building Type: (check one or more)
X Single Family
____ Multi-Family
____ Addition
____ Existing-Plus-Addition

Front Orientation: 160° North / (South) / East / West / All Orientations
(input front orientation in degrees from True North and circle one)

Number of Stories 2
Number of Dwelling Units: 1
Floor Construction Type: (Slab/Raised Floor) (circle one or both)

BUILDING SHELL INSULATION

Component Type	Frame Type wd = wood stl = steel	Cavity Insulation R-Value	Sheathing Insulation R-Value	Total R-Value[1]	Assembly U-Value[1]	Location/Comments (attic, garage, typical, etc.)
Wall	wd 2x6.24	R-19		16.75	0.060	House Frame Walls
Wall	Conc. Block		R-5	6.60	0.152	Solid Grout/"Heavy Mass"
Roof	wd 2x4.24	R-38		41.667	0.024	2x4 trusses with R-38 insul.
Roof						
Floor	wd 2x8.16	R-19		20.408	0.049	2x8 floor joists 16" o.c. w/R-19
Floor						
Slab Edge						

FENESTRATION

Fenestration #/Type/Pos.	Orientation	Area (ft²)	Fenestration U-Value	Fenestration SHGC	Shading Devices: Interior Shading Att.[2]	Shading Devices: Exterior Shading Att.	Shading Devices: Overhangs /Fins
Front	South	100	0.65	0.68	Standard	Standard	Overhang
Front					Standard		
Left	West	50	0.55	0.68	Standard	Sunscreen	None
Left					Standard		
Rear	North	80	0.65	0.70	Standard	Standard	None
Rear					Standard		
Right	East	50	0.65	0.68	Standard	Sunscreen	None
Right					Standard		
Skylight					Standard		
Skylight					Standard		

[1] For prescriptive compliance, Total R-Value and Assembly U-Value are not required for a wood-framed wall that meets cavity R-value insulation requirement for the Prescriptive Package.
[2] For prescriptive compliance, there are no credits for any interior shading except the default or "Standard" drapery. These default interior shading devices (draperies) need not be installed for compliance purposes.

March 31, 1999

Figure 3-2: Example Certificate of Compliance CF-1R Form (Page 1) With a Prescriptive Package

CERTIFICATE OF COMPLIANCE: RESIDENTIAL (Page 2 of 2) CF-1R

GARCIA RESIDENCE — Project Title

July 1, 1999 — Date

HVAC SYSTEMS

Note: Input hydronic or combined hydronic data under Water Heating Systems, except Design Heating Load.

Heating Equipment Type (furnace, heat pump, etc.)	Minimum Efficiency (AFUE or HSPF)	Distribution Type and Location (ducts, attic, etc.)	Duct or Piping R-Value	Thermostat Type	Heat Pump Configuration (split or package)
Gas Furnace	78%	Attic/Crawlspace	R-4.2	Setback	Split System

Cooling Equipment Type (air conditioner, heat pump, evap. cooling)	Minimum Efficiency (SEER)	Duct Location (attic, etc.)	Duct R-Value	Thermostat Type	Heat Pump Configuration (split or package)
Air Conditioner	10.0	Attic/Crawlspace	R-4.2	Setback	Split System

WATER HEATING SYSTEMS

Water Heater Type	Distribution Type	Number in System	Rated[1] Input (kW or Btu/hr)	Tank Capacity (gallons)	Energy[1] Factor or Recovery Efficiency	Standby[1] Loss (%)	External Tank Insulation R-Value
Storage Gas	Hot Water Recovery	1	70,000	75	0.58	NA	None

1. For small gas storage water heaters (rated inputs of less than or equal to 75,000 Btu/hr), electric resistance, and heat pump water heaters, list Energy Factor. For large gas storage water heaters (rated input of greater than 75,000 Btu/hr), list Rated Input, Recovery Efficiency and Standby Loss. For instantaneous gas water heaters, list rated input and recovery efficiencies.

SPECIAL FEATURES and MODELING ASSUMPTIONS (Add extra sheets if necessary)

Including Thermal Mass (thermal mass type, covering, thickness, and description)

None

COMPLIANCE STATEMENT

This certificate of compliance lists the building features and performance specifications needed to comply with Title 24, Parts 1 and 6 of the California Code of Regulations, and the administrative regulations to implement them. This certificate has been signed by the individual with overall design responsibility. When this certificate of compliance is submitted for a single building plan to be built in multiple orientations, any shading feature that is varied is indicated in the Special Features / Remarks section.

Designer or Owner (per Business and Professions Code)

Name:
Title/Firm:
Address:
Telephone:
Lic. #:

(signature) (date)

Documentation Author

Name:
Title/Firm:
Address:
Telephone:

(signature) (date)

Enforcement Agency

Name:
Title:
Agency:
Telephone:

(signature / stamp) (date)

March 31, 1999

Figure 3-3: Example Certificate of Compliance CF-1R Form (Page 2) With a Prescriptive Package

3.4 PACKAGE REQUIREMENTS FOR ALL CLIMATE ZONES

The following Tables No. 1-Z1 through 1-Z16 are from Section 151 of the standards. These tables list all of the requirements for Packages A, B, C and D in all 16 climate zones. See Part 3.3 for more information on general prescriptive compliance requirements.

TABLE NO. 1-Z1

ALTERNATIVE COMPONENT PACKAGES
FOR CLIMATE ZONE 1

COMPONENT	*PACKAGE*[1] *A*	*B*	*C*	*D*
BUILDING ENVELOPE				
Insulation Minimums[2]				
Ceiling	*R30*	*R30*	*R49*	*R38*
Wood Frame Walls	*R19*	*R19*	*R29*	*R21*
"Heavy Mass" Walls	*(R8.5)*	*(R5.0)*	*NA*	*(R4.76)*
"Light Mass" Walls	*[R8.5]*	*[R6.0]*	*NA*	*NA*
Below Grade Walls	*NA*	*NA*	*NA*	*R0*
Slab Floor Perimeter	*R7*	*R7*	*R7*	*NR*
Raised Floors	*R19*	*R19*	*R30*	*R19*
Concrete Raised Floors	*NA*	*NA*	*NA*	*R8*
GLAZING				
Maximum U-value[3]	*0.65*	*0.65*	*0.40*	*0.65*
Maximum Total Area	*NR*	*16%*	*14%*	*16%*
Maximum Total Nonsouth Facing Area	*9.6%*	*NR*	*NR*	*NR*
Minimum South Facing Area	*6.4%*	*NR*	*NR*	*NR*
SOLAR HEAT GAIN COEFFICIENT[4]				
South Facing Glazing	*NR*	*NR*	*NR*	*NR*
West Facing Glazing	*NR*	*NR*	*NR*	*NR*
East Facing Glazing	*NR*	*NR*	*NR*	*NR*
North Facing Glazing	*NR*	*NR*	*NR*	*NR*
THERMAL MASS[5]	*REQ*	*NR*	*REQ*	*NR*
INFILTRATION CONTROL				
Continuous Barrier	*NR*	*REQ*	*NR*	*NR*
Air-to-Air Heat Exchanger	*NR*	*REQ*	*NR*	*NR*
SPACE HEATING SYSTEM[6]				
Electric Resistant Allowed	*NO*	*NO*	*YES*[7]	*NO*
If Gas, AFUE =	*78%*	*78%*	*78%*	*MIN*
If Heat Pump,				
Split System HSPF[8] *=*	*6.8*	*6.8*	*6.8*	*MIN*
Single Package System HSPF =	*6.6*	*6.6*	*6.6*	*MIN*
SPACE COOLING SYSTEM				
If Split System A/C, SEER =	*10.0*	*10.0*	*10.0*	*MIN*
If Single Package A/C, SEER[9] *=*	*9.7*	*9.7*	*9.7*	*MIN*
DOMESTIC WATER HEATING TYPE				
System must meet budget, see 151(b)1 and 151(f)(9)	*ANY*	*ANY*	*ANY*[9]	*ANY*

LEGEND: NR = Not Required; NA = Not Applicable; REQ = Required; MIN = Minimum
SEE NOTES FOLLOWING TABLE NO. 1-Z16

TABLE NO. 1-Z2
ALTERNATIVE COMPONENT PACKAGES
FOR CLIMATE ZONE 2

COMPONENT	PACKAGE[1] A	B	C	D
BUILDING ENVELOPE				
Insulation Minimums[2]				
Ceiling	R30	R30	R49	R30
Wood Frame Walls	R13	R19	R29	R13
"Heavy Mass" Walls	(R2.3)	(R2.2)	NA	(R2.44)
"Light Mass" Walls	[R4.5]	[R4.5]	NA	NA
Below Grade Walls	NA	NA	NA	R0
Slab Floor Perimeter	R7	R7	R7	NR
Raised Floors	R13	R19	R30	R19
Concrete Raised Floors	NA	NA	NA	R8
GLAZING				
Maximum U-value[3]	1.10	0.65	0.40	0.65
Maximum Total Area	NR	14%	16%	16%
Maximum Total Nonsouth Facing Area	9.6%	NR	NR	NR
Minimum South Facing Area	6.4%	NR	NR	NR
SOLAR HEAT GAIN COEFFICIENT[4]				
South Facing Glazing	NR	NR	NR	NR
West Facing Glazing	NR	NR	NR	NR
East Facing Glazing	NR	NR	NR	NR
North Facing Glazing	NR	NR	NR	NR
THERMAL MASS[5]	REQ	NR	REQ	NR
INFILTRATION CONTROL				
Continuous Barrier	NR	NR	NR	NR
Air-to-Air Heat Exchanger	NR	NR	NR	NR
SPACE HEATING SYSTEM[6]				
Electric Rsistant Allowed	NO	NO	YES[7]	NO
If Gas, AFUE =	78%	78%	78%	MIN
If Heat Pump,				
Split System HSPF[8] =	6.8	6.8	6.8	MIN
Single Package System HSPF =	6.6	6.6	6.6	MIN
SPACE COOLING SYSTEM				
If Split System A/C, SEER =	10.0	10.0	10.0	MIN
If Single Package A/C, SEER[9] =	9.7	9.7	9.7	MIN
DOMESTIC WATER HEATING TYPE				
System must meet budget, see 151(b)1 and 151(f)(9)	ANY	ANY	ANY[9]	ANY

LEGEND: NR = Not Required; NA = Not Applicable; REQ = Required; MIN = Minimum
SEE NOTES FOLLOWING TABLE NO. 1-Z16

TABLE NO. 1-Z3
ALTERNATIVE COMPONENT PACKAGES
FOR CLIMATE ZONE 3

COMPONENT	*PACKAGE*[1] *A*	*B*	*C*	*D*
BUILDING ENVELOPE				
Insulation Minimums[2]				
Ceiling	*R30*	*R30*	*R38*	*R30*
Wood Frame Walls	*R13*	*R19*	*R25*	*R13*
"Heavy Mass" Walls	*(R4.5)*	*(R3.5)*	*NA*	*(R2.44)*
"Light Mass" Walls	*[R5.0]*	*[R5.0]*	*NA*	*NA*
Below Grade Walls	*NA*	*NA*	*NA*	*R0*
Slab Floor Perimeter	*R7*	*R7*	*R7*	*NR*
Raised Floors	*R13*	*R19*	*R30*	*R19*
Concrete Raised Floors	*NA*	*NA*	*NA*	*R0*
GLAZING				
Maximum U-value[3]	*1.10*	*0.65*	*0.40*	*0.75*
Maximum Total Area	*NR*	*16%*	*14%*	*20%*
Maximum Total Nonsouth Facing Area	*9.6%*	*NR*	*NR*	*NR*
Minimum South Facing Area	*6.4%*	*NR*	*NR*	*NR*
SOLAR HEAT GAIN COEFFICIENT[4]				
South Facing Glazing	*NR*	*NR*	*NR*	*NR*
West Facing Glazing	*NR*	*NR*	*NR*	*NR*
East Facing Glazing	*NR*	*NR*	*NR*	*NR*
North Facing Glazing	*NR*	*NR*	*NR*	*NR*
THERMAL MASS[5]	*REQ*	*NR*	*REQ*	*NR*
INFILTRATION CONTROL				
Continuous Barrier	*NR*	*NR*	*NR*	*NR*
Air-to-Air Heat Exchanger	*NR*	*NR*	*NR*	*NR*
SPACE HEATING SYSTEM[6]				
Electric Rsistant Allowed	*NO*	*NO*	*YES*[7]	*NO*
If Gas, AFUE =	*78%*	*78%*	*78%*	*MIN*
If Heat Pump,				
Split System HSPF[8] *=*	*6.8*	*6.8*	*6.8*	*MIN*
Single Package System HSPF =	*6.6*	*6.6*	*6.6*	*MIN*
SPACE COOLING SYSTEM				
If Split System A/C, SEER =	*10.0*	*10.0*	*10.0*	*MIN*
If Single Package A/C, SEER[9] *=*	*9.7*	*9.7*	*9.7*	*MIN*
DOMESTIC WATER HEATING TYPE				
System must meet budget, see 151(b)1 and 151(f)(9)	*ANY*	*ANY*	*ANY*[9]	*ANY*

LEGEND: NR = Not Required; NA = Not Applicable; REQ = Required; MIN = Minimum
SEE NOTES FOLLOWING TABLE NO. 1-Z16

TABLE NO. 1-Z4
ALTERNATIVE COMPONENT PACKAGES
FOR CLIMATE ZONE 4

COMPONENT	PACKAGE[1] A	B	C	D
BUILDING ENVELOPE				
Insulation Minimums[2]				
Ceiling	R30	R30	R38	R30
Wood Frame Walls	R13	R19	R25	R13
"Heavy Mass" Walls	(R3.5)	(R3.5)	NA	(R2.44)
"Light Mass" Walls	[R5.0]	[R5.0]	NA	NA
Below Grade Walls	NA	NA	NA	R0
Slab Floor Perimeter	R7	R7	R7	NR
Raised Floors	R13	R19	R30	R19
Concrete Raised Floors	NA	NA	NA	R0
GLAZING				
Maximum U-value[3]	1.10	0.65	0.40	0.75
Maximum Total Area	NR	16%	14%	20%
Maximum Total Nonsouth	9.6%	NR	NR	NR
Minimum South Facing Area	6.4%	NR	NR	NR
SOLAR HEAT GAIN COEFFICIENT[4]				
South Facing Glazing	NR	NR	NR	NR
West Facing Glazing	NR	NR	NR	NR
East Facing Glazing	NR	NR	NR	NR
North Facing Glazing	NR	NR	NR	NR
THERMAL MASS[5]	REQ	NR	REQ	NR
INFILTRATION CONTROL				
Continuous Barrier	NR	NR	NR	NR
Air-to-Air Heat Exchanger	NR	NR	NR	NR
SPACE HEATING SYSTEM[6]				
Electric Rsistant Allowed	NO	NO	YES[7]	NO
If Gas, AFUE =	78%	78%	78%	MIN
If Heat Pump,				
Split System HSPF[8] =	6.8	6.8	6.8	MIN
Single Package System HSPF =	6.6	6.6	6.6	MIN
SPACE COOLING SYSTEM				
If Split System A/C, SEER =	10.0	10.0	10.0	MIN
If Single Package A/C, SEER[9] =	9.7	9.7	9.7	MIN
DOMESTIC WATER HEATING TYPE				
System must meet budget, see 151(b)1 and 151(f)(9)	ANY	ANY	ANY[9]	ANY

LEGEND: NR = Not Required; NA = Not Applicable; REQ = Required; MIN = Minimum
SEE NOTES FOLLOWING TABLE NO. 1-Z16

TABLE NO. 1-Z5
ALTERNATIVE COMPONENT PACKAGES
FOR CLIMATE ZONE 5

COMPONENT	*PACKAGE*[1] *A*	*B*	*C*	*D*
BUILDING ENVELOPE				
Insulation Minimums[2]				
Ceiling	*R30*	*R30*	*R38*	*R30*
Wood Frame Walls	*R13*	*R19*	*R25*	*R13*
"Heavy Mass" Walls	*(R2.4)*	*(R2.3)*	*NA*	*(R2.44)*
"Light Mass" Walls	*[R4.5]*	*[R4.5]*	*NA*	*NA*
Below Grade Walls	*NA*	*NA*	*NA*	*R0*
Slab Floor Perimeter	*R7*	*R7*	*R7*	*NR*
Raised Floors	*R13*	*R19*	*R30*	*R19*
Concrete Raised Floors	*NA*	*NA*	*NA*	*R0*
GLAZING				
Maximum U-value[3]	*1.10*	*0.65*	*0.40*	*0.75*
Maximum Total Area	*NR*	*14%*	*16%*	*16%*
Maximum Total Nonsouth Facing Area	*9.6%*	*NR*	*NR*	*NR*
Minimum South Facing Area	*6.4%*	*NR*	*NR*	*NR*
SOLAR HEAT GAIN COEFFICIENT[4]				
South Facing Glazing	*NR*	*NR*	*NR*	*NR*
West Facing Glazing	*NR*	*NR*	*NR*	*NR*
East Facing Glazing	*NR*	*NR*	*NR*	*NR*
North Facing Glazing	*NR*	*NR*	*NR*	*NR*
THERMAL MASS[5]	*REQ*	*NR*	*REQ*	*NR*
INFILTRATION CONTROL				
Continuous Barrier	*NR*	*NR*	*NR*	*NR*
Air-to-Air Heat Exchanger	*NR*	*NR*	*NR*	*NR*
SPACE HEATING SYSTEM[6]				
Electric Rsistant Allowed	*NO*	*NO*	*YES*[7]	*NO*
If Gas, AFUE =	*78%*	*78%*	*78%*	*MIN*
If Heat Pump,				
Split System HSPF[8] *=*	*6.8*	*6.8*	*6.8*	*MIN*
Single Package System HSPF =	*6.6*	*6.6*	*6.6*	*MIN*
SPACE COOLING SYSTEM				
If Split System A/C, SEER =	*10.0*	*10.0*	*10.0*	*MIN*
If Single Package A/C, SEER[9] *=*	*9.7*	*9.7*	*9.7*	*MIN*
DOMESTIC WATER HEATING TYPE				
System must meet budget, see 151(b)1 and 151(f)(9)	*ANY*	*ANY*	*ANY*[9]	*ANY*

LEGEND: NR = Not Required; NA = Not Applicable; REQ = Required; MIN = Minimum
SEE NOTES FOLLOWING TABLE NO. 1-Z16

TABLE NO. 1-Z6
ALTERNATIVE COMPONENT PACKAGES
FOR CLIMATE ZONE 6

COMPONENT	PACKAGE[1] A	B	C	D
BUILDING ENVELOPE				
Insulation Minimums[2]				
Ceiling	R19	R30	R38	R30
Wood Frame Walls	R13	R19	R21	R13
"Heavy Mass" Walls	(R1.5)	(R1.6)	NA	(R2.44)
"Light Mass" Walls	[R4.0]	[R4.5]	NA	NA
Below Grade Walls	NA	NA	NA	R0
Slab Floor Perimeter	NR	R7	R7	NR
Raised Floors	R13	R19	R21	R19
Concrete Raised Floors	NA	NA	NA	R0
GLAZING				
Maximum U-value[3]	1.10	0.65	0.50	0.75
Maximum Total Area	NR	16%	14%	20%
Maximum Total Nonsouth Facing Area	9.6%	NR	NR	NR
Minimum South Facing Area	6.4%	NR	NR	NR
SOLAR HEAT GAIN COEFFICIENT[4]				
South Facing Glazing	NR	NR	NR	NR
West Facing Glazing	NR	NR	NR	NR
East Facing Glazing	NR	NR	NR	NR
North Facing Glazing	NR	NR	NR	NR
THERMAL MASS[5]	REQ	NR	REQ	NR
INFILTRATION CONTROL				
Continuous Barrier	NR	NR	NR	NR
Air-to-Air Heat Exchanger	NR	NR	NR	NR
SPACE HEATING SYSTEM[6]				
Electric Rsistant Allowed	NO	NO	YES[7]	NO
If Gas, AFUE =	78%	78%	78%	MIN
If Heat Pump,				
Split System HSPF[8] =	6.8	6.8	6.8	MIN
Single Package System HSPF =	6.6	6.6	6.6	MIN
SPACE COOLING SYSTEM				
If Split System A/C, SEER =	10.0	10.0	10.0	MIN
If Single Package A/C, SEER[9] =	9.7	9.7	9.7	MIN
DOMESTIC WATER HEATING TYPE				
System must meet budget, see 151(b)1 and 151(f)(9)	ANY	ANY	ANY[9]	ANY

LEGEND: NR = Not Required; NA = Not Applicable; REQ = Required; MIN = Minimum
SEE NOTES FOLLOWING TABLE NO. 1-Z16

TABLE NO. 1-Z7
ALTERNATIVE COMPONENT PACKAGES
FOR CLIMATE ZONE 7

COMPONENT	*PACKAGE*[1] *A*	*B*	*C*	*D*
BUILDING ENVELOPE				
Insulation Minimums[2]				
Ceiling	*R19*	*R30*	*R38*	*R30*
Wood Frame Walls	*R13*	*R13*	*R21*	*R13*
"Heavy Mass" Walls	*(R1.7)*	*(R1.4)*	*NA*	*(R2.44)*
"Light Mass" Walls	*[R4.0]*	*[R3.5]*	*NA*	*NA*
Below Grade Walls	*NA*	*NA*	*NA*	*R0*
Slab Floor Perimeter	*NR*	*R7*	*R7*	*NR*
Raised Floors	*R13*	*R13*	*R21*	*R19*
Concrete Raised Floors	*NA*	*NA*	*NA*	*R0*
GLAZING				
Maximum U-value[3]	*1.10*	*0.65*	*0.50*	*0.75*
Maximum Total Area	*NR*	*14%*	*14%*	*20%*
Maximum Total Nonsouth Facing Area	*9.6%*	*NR*	*NR*	*NR*
Minimum South Facing Area	*6.4%*	*NR*	*NR*	*NR*
SOLAR HEAT GAIN COEFFICIENT[4]				
South Facing Glazing	*NR*	*NR*	*NR*	*NR*
West Facing Glazing	*NR*	*NR*	*NR*	*NR*
East Facing Glazing	*NR*	*NR*	*NR*	*NR*
North Facing Glazing	*NR*	*NR*	*NR*	*NR*
THERMAL MASS[5]	*REQ*	*NR*	*REQ*	*NR*
INFILTRATION CONTROL				
Continuous Barrier	*NR*	*NR*	*NR*	*NR*
Air-to-Air Heat Exchanger	*NR*	*NR*	*NR*	*NR*
SPACE HEATING SYSTEM[6]				
Electric Rsistant Allowed	*NO*	*NO*	*YES*[7]	*NO*
If Gas, AFUE =	*78%*	*78%*	*78%*	*MIN*
If Heat Pump,				
Split System HSPF[8] *=*	*6.8*	*6.8*	*6.8*	*MIN*
Single Package System HSPF =	*6.6*	*6.6*	*6.6*	*MIN*
SPACE COOLING SYSTEM				
If Split System A/C, SEER =	*10.0*	*10.0*	*10.0*	*MIN*
If Single Package A/C, SEER[9] *=*	*9.7*	*9.7*	*9.7*	*MIN*
DOMESTIC WATER HEATING TYPE				
System must meet budget, see 151(b)1 and 151(f)(9)	*ANY*	*ANY*	*ANY*[9]	*ANY*

LEGEND: NR = Not Required; NA = Not Applicable; REQ = Required; MIN = Minimum
SEE NOTES FOLLOWING TABLE NO. 1-Z16

TABLE NO. 1-Z8
ALTERNATIVE COMPONENT PACKAGES
FOR CLIMATE ZONE 8

COMPONENT	PACKAGE[1] A	B	C	D
BUILDING ENVELOPE				
Insulation Minimums[2]				
Ceiling	R30	R30	R38	R30
Wood Frame Walls	R13	R19	R21	R13
"Heavy Mass" Walls	(R1.6)	(R1.6)	NA	(R2.44)
"Light Mass" Walls	[R4.0]	[R4.5]	NA	NA
Below Grade Walls	NA	NA	NA	R0
Slab Floor Perimeter	NR	R7	R7	NR
Raised Floors	R13	R19	R21	R19
Concrete Raised Floors	NA	NA	NA	R0
GLAZING				
Maximum U-value[3]	1.10	0.65	0.50	0.75
Maximum Total Area	NR	14%	14%	20%
Maximum Total Nonsouth Facing Area	9.6%	NR	NR	NR
Minimum South Facing Area	6.4%	NR	NR	NR
SOLAR HEAT GAIN COEFFICIENT[4]				
South Facing Glazing	0.40	0.40	NR	NR
West Facing Glazing	0.40	0.40	0.40	0.40
East Facing Glazing	NR	NR	0.40	0.40
North Facing Glazing	NR	NR	NR	NR
THERMAL MASS[5]	REQ	NR	REQ	NR
INFILTRATION CONTROL				
Continuous Barrier	NR	NR	NR	NR
Air-to-Air Heat Exchanger	NR	NR	NR	NR
SPACE HEATING SYSTEM[6]				
Electric Rsistant Allowed	NO	NO	YES[7]	NO
If Gas, AFUE =	78%	78%	78%	MIN
If Heat Pump,				
Split System HSPF[8] =	6.8	6.8	6.8	MIN
Single Package System HSPF =	6.6	6.6	6.6	MIN
SPACE COOLING SYSTEM				
If Split System A/C, SEER =	10.0	10.0	10.0	MIN
If Single Package A/C, SEER[9] =	9.7	9.7	9.7	MIN
DOMESTIC WATER HEATING TYPE				
System must meet budget, see 151(b)1 and 151(f)(9)	ANY	ANY	ANY[9]	ANY

LEGEND: NR = Not Required; NA = Not Applicable; REQ = Required; MIN = Minimum
SEE NOTES FOLLOWING TABLE NO. 1-Z16

TABLE NO. 1-Z9
ALTERNATIVE COMPONENT PACKAGES
FOR CLIMATE ZONE 9

COMPONENT	*PACKAGE*[1] *A*	*B*	*C*	*D*
BUILDING ENVELOPE				
Insulation Minimums[2]				
Ceiling	*R30*	*R30*	*R38*	*R30*
Wood Frame Walls	*R13*	*R19*	*R21*	*R13*
"Heavy Mass" Walls	*(R1.4)*	*(R1.5)*	*NA*	*(R2.44)*
"Light Mass" Walls	*[R4.0]*	*[R4.0]*	*NA*	*NA*
Below Grade Walls	*NA*	*NA*	*NA*	*R0*
Slab Floor Perimeter	*R7*	*R7*	*R7*	*NR*
Raised Floors	*R13*	*R19*	*R21*	*R19*
Concrete Raised Floors	*NA*	*NA*	*NA*	*R0*
GLAZING				
Maximum U-value[3]	*1.10*	*0.65*	*0.50*	*0.75*
Maximum Total Area	*NR*	*14%*	*14%*	*20%*
Maximum Total Nonsouth Facing Area	*9.6%*	*NR*	*NR*	*NR*
Minimum South Facing Area	*6.4%*	*NR*	*NR*	*NR*
SOLAR HEAT GAIN COEFFICIENT[4]				
South Facing Glazing	*0.40*	*0.40*	*NR*	*NR*
West Facing Glazing	*0.40*	*0.40*	*0.40*	*0.40*
East Facing Glazing	*NR*	*NR*	*0.40*	*0.40*
North Facing Glazing	*NR*	*NR*	*NR*	*NR*
THERMAL MASS[5]	*REQ*	*NR*	*REQ*	*NR*
INFILTRATION CONTROL				
Continuous Barrier	*NR*	*NR*	*NR*	*NR*
Air-to-Air Heat Exchanger	*NR*	*NR*	*NR*	*NR*
SPACE HEATING SYSTEM[6]				
Electric Rsistant Allowed	*NO*	*NO*	*YES*[7]	*NO*
If Gas, AFUE =	*78%*	*78%*	*78%*	*MIN*
If Heat Pump,				
Split System HSPF[8] *=*	*6.8*	*6.8*	*6.8*	*MIN*
Single Package System HSPF =	*6.6*	*6.6*	*6.6*	*MIN*
SPACE COOLING SYSTEM				
If Split System A/C, SEER =	*10.0*	*10.0*	*10.0*	*MIN*
If Single Package A/C, SEER[9] *=*	*9.7*	*9.7*	*9.7*	*MIN*
DOMESTIC WATER HEATING TYPE				
System must meet budget, see 151(b)1 and 151(f)(9)	*ANY*	*ANY*	*ANY*[9]	*ANY*

LEGEND: NR = Not Required; NA = Not Applicable; REQ = Required; MIN = Minimum
SEE NOTES FOLLOWING TABLE NO. 1-Z16

TABLE NO. 1-Z10
ALTERNATIVE COMPONENT PACKAGES
FOR CLIMATE ZONE 10

COMPONENT	PACKAGE[1] A	B	C	D
BUILDING ENVELOPE				
Insulation Minimums[2]				
Ceiling	R30	R30	R49	R30
Wood Frame Walls	R13	R19	R25	R13
"Heavy Mass" Walls	(R1.9)	(R2.0)	NA	(R2.44)
"Light Mass" Walls	[R4.5]	[R4.5]	NA	NA
Below Grade Walls	NA	NA	NA	R0
Slab Floor Perimeter	R7	R7	R7	NR
Raised Floors	R13	R19	R30	R19
Concrete Raised Floors	NA	NA	NA	R0
GLAZING				
Maximum U-value[3]	1.10	0.65	0.40	0.75
Maximum Total Area	NR	16%	16%	20%
Maximum Total Nonsouth Facing Area	9.6%	NR	NR	NR
Minimum South Facing Area	6.4%	NR	NR	NR
SOLAR HEAT GAIN COEFFICIENT[4]				
South Facing Glazing	0.40	0.40	NR	NR
West Facing Glazing	0.40	0.40	0.40	0.40
East Facing Glazing	NR	NR	0.40	0.40
North Facing Glazing	NR	NR	NR	NR
THERMAL MASS[5]	REQ	NR	REQ	NR
INFILTRATION CONTROL				
Continuous Barrier	NR	NR	NR	NR
Air-to-Air Heat Exchanger	NR	NR	NR	NR
SPACE HEATING SYSTEM[6]				
Electric Rsistant Allowed	NO	NO	YES[7]	NO
If Gas, AFUE =	78%	78%	78%	MIN
If Heat Pump,				
Split System HSPF[8] =	6.8	6.8	6.8	MIN
Single Package System HSPF =	6.6	6.6	6.6	MIN
SPACE COOLING SYSTEM				
If Split System A/C, SEER =	10.0	10.0	10.0	MIN
If Single Package A/C, SEER[9] =	9.7	9.7	9.7	MIN
DOMESTIC WATER HEATING TYPE				
System must meet budget, see 151(b)1 and 151(f)(9)	ANY	ANY	ANY[9]	ANY

LEGEND: NR = Not Required; NA = Not Applicable; REQ = Required; MIN = Minimum
SEE NOTES FOLLOWING TABLE NO. 1-Z16

TABLE NO. 1-Z11
ALTERNATIVE COMPONENT PACKAGES
FOR CLIMATE ZONE 11

COMPONENT	*PACKAGE*[1] *A*	*B*	*C*	*D*
BUILDING ENVELOPE				
Insulation Minimums[2]				
Ceiling	*R30*	*R30*	*R49*	*R38*
Wood Frame Walls	*R13*	*R19*	*R29*	*R19*
"Heavy Mass" Walls	*(R5.0)*	*(R5.5)*	*NA*	*(R4.76)*
"Light Mass" Walls	*[R6.0]*	*[R6.5]*	*NA*	*NA*
Below Grade Walls	*NA*	*NA*	*NA*	*R0*
Slab Floor Perimeter	*R7*	*R7*	*R7*	*NR*
Raised Floors	*R13*	*R19*	*R30*	*R19*
Concrete Raised Floors	*NA*	*NA*	*NA*	*R8*
GLAZING				
Maximum U-value[3]	*0.65*	*0.65*	*0.40*	*0.65*
Maximum Total Area	*NR*	*14%*	*16%*	*16%*
Maximum Total Nonsouth Facing Area	*9.6%*	*NR*	*NR*	*NR*
Minimum South Facing Area	*6.4%*	*NR*	*NR*	*NR*
SOLAR HEAT GAIN COEFFICIENT[4]				
South Facing Glazing	*0.40*	*0.40*	*NR*	*NR*
West Facing Glazing	*0.40*	*0.40*	*0.40*	*0.40*
East Facing Glazing	*NR*	*NR*	*0.40*	*0.40*
North Facing Glazing	*NR*	*NR*	*NR*	*NR*
THERMAL MASS[5]	*REQ*	*NR*	*REQ*	*NR*
INFILTRATION CONTROL				
Continuous Barrier	*NR*	*NR*	*NR*	*NR*
Air-to-Air Heat Exchanger	*NR*	*NR*	*NR*	*NR*
SPACE HEATING SYSTEM[6]				
Electric Rsistant Allowed	*NO*	*NO*	*YES*[7]	*NO*
If Gas, AFUE =	*78%*	*78%*	*78%*	*MIN*
If Heat Pump,				
Split System HSPF[8] *=*	*6.8*	*6.8*	*6.8*	*MIN*
Single Package System HSPF =	*6.6*	*6.6*	*6.6*	*MIN*
SPACE COOLING SYSTEM				
If Split System A/C, SEER =	*10.0*	*10.0*	*10.0*	*MIN*
If Single Package A/C, SEER[9] *=*	*9.7*	*9.7*	*9.7*	*MIN*
DOMESTIC WATER HEATING TYPE				
System must meet budget, see 151(b)1 and 151(f)(9)	*ANY*	*ANY*	*ANY*[9]	*ANY*

LEGEND: NR = Not Required; NA = Not Applicable; REQ = Required; MIN = Minimum
SEE NOTES FOLLOWING TABLE NO. 1-Z16

TABLE NO. 1-Z12
ALTERNATIVE COMPONENT PACKAGES
FOR CLIMATE ZONE 12

COMPONENT	PACKAGE[1] A	B	C	D
BUILDING ENVELOPE				
Insulation Minimums[2]				
Ceiling	R30	R30	R49	R38
Wood Frame Walls	R13	R19	R29	R19
"Heavy Mass" Walls	(R3.5)	(R3.5)	NA	(R4.76)
"Light Mass" Walls	[R5.0]	[R5.5]	NA	NA
Below Grade Walls	NA	NA	NA	R0
Slab Floor Perimeter	NR	R7	R7	NR
Raised Floors	R13	R19	R30	R19
Concrete Raised Floors	NA	NA	NA	R4
GLAZING				
Maximum U-value[3]	0.65	0.65	0.40	0.65
Maximum Total Area	NR	14%	16%	16%
Maximum Total Nonsouth Facing Area	9.6%	NR	NR	NR
Minimum South Facing Area	6.4%	NR	NR	NR
SOLAR HEAT GAIN COEFFICIENT[4]				
South Facing Glazing	0.40	0.40	NR	NR
West Facing Glazing	0.40	0.40	0.40	0.40
East Facing Glazing	NR	NR	0.40	0.40
North Facing Glazing	NR	NR	NR	NR
THERMAL MASS[5]	REQ	NR	REQ	NR
INFILTRATION CONTROL				
Continuous Barrier	NR	NR	NR	NR
Air-to-Air Heat Exchanger	NR	NR	NR	NR
SPACE HEATING SYSTEM[6]				
Electric Rsistant Allowed	NO	NO	YES[7]	NO
If Gas, AFUE =	78%	78%	78%	MIN
If Heat Pump,				
Split System HSPF[8] =	6.8	6.8	6.8	MIN
Single Package System HSPF =	6.6	6.6	6.6	MIN
SPACE COOLING SYSTEM				
If Split System A/C, SEER =	10.0	10.0	10.0	MIN
If Single Package A/C, SEER[9] =	9.7	9.7	9.7	MIN
DOMESTIC WATER HEATING TYPE				
System must meet budget, see 151(b)1 and 151(f)(9)	ANY	ANY	ANY[9]	ANY

LEGEND: NR = Not Required; NA = Not Applicable; REQ = Required; MIN = Minimum
SEE NOTES FOLLOWING TABLE NO. 1-Z16

TABLE NO. 1-Z13
ALTERNATIVE COMPONENT PACKAGES
FOR CLIMATE ZONE 13

COMPONENT	*PACKAGE*[1] *A*	*B*	*C*	*D*
BUILDING ENVELOPE				
Insulation Minimums[2]				
Ceiling	*R30*	*R30*	*R49*	*R38*
Wood Frame Walls	*R13*	*R19*	*R29*	*R19*
"Heavy Mass" Walls	*(R4.0)*	*(R4.0)*	*NA*	*(R4.76)*
"Light Mass" Walls	*[R5.5]*	*[R6.0]*	*NA*	*NA*
Below Grade Walls	*NA*	*NA*	*NA*	*R0*
Slab Floor Perimeter	*NR*	*R7*	*R7*	*NR*
Raised Floors	*R13*	*R19*	*R30*	*R19*
Concrete Raised Floors	*NA*	*NA*	*NA*	*R8*
GLAZING				
Maximum U-value[3]	*0.65*	*0.65*	*0.40*	*0.65*
Maximum Total Area	*NR*	*14%*	*16%*	*16%*
Maximum Total Nonsouth Facing Area	*9.6%*	*NR*	*NR*	*NR*
Minimum South Facing Area	*6.4%*	*NR*	*NR*	*NR*
SOLAR HEAT GAIN COEFFICIENT[4]				
South Facing Glazing	*0.40*	*0.40*	*NR*	*NR*
West Facing Glazing	*0.40*	*0.40*	*0.40*	*0.40*
East Facing Glazing	*NR*	*NR*	*0.40*	*0.40*
North Facing Glazing	*NR*	*NR*	*NR*	*NR*
THERMAL MASS[5]	*REQ*	*NR*	*REQ*	*NR*
INFILTRATION CONTROL				
Continuous Barrier	*NR*	*NR*	*NR*	*NR*
Air-to-Air Heat Exchanger	*NR*	*NR*	*NR*	*NR*
SPACE HEATING SYSTEM[6]				
Electric Rsistant Allowed	*NO*	*NO*	*YES*[7]	*NO*
If Gas, AFUE =	*78%*	*78%*	*78%*	*MIN*
If Heat Pump,				
Split System HSPF[8] *=*	*6.8*	*6.8*	*6.8*	*MIN*
Single Package System HSPF =	*6.6*	*6.6*	*6.6*	*MIN*
SPACE COOLING SYSTEM				
If Split System A/C, SEER =	*10.0*	*10.0*	*10.0*	*MIN*
If Single Package A/C, SEER[9] *=*	*9.7*	*9.7*	*9.7*	*MIN*
DOMESTIC WATER HEATING TYPE				
System must meet budget, see 151(b)1 and 151(f)(9)	*ANY*	*ANY*	*ANY*[9]	*ANY*

LEGEND: NR = Not Required; NA = Not Applicable; REQ = Required; MIN = Minimum
SEE NOTES FOLLOWING TABLE NO. 1-Z16

TABLE NO. 1-Z14
ALTERNATIVE COMPONENT PACKAGES
FOR CLIMATE ZONE 14

COMPONENT	PACKAGE[1] A	B	C	D
BUILDING ENVELOPE				
Insulation Minimums[2]				
Ceiling	R38	R38	R49	R38
Wood Frame Walls	R19	R19	R29	R21
"Heavy Mass" Walls	(R7.0)	(R5.5)	NA	(R4.76)
"Light Mass" Walls	[R8.0]	[R6.5]	NA	NA
Below Grade Walls	NA	NA	NA	R0
Slab Floor Perimeter	R7	R7	R7	NR
Raised Floors	R19	R19	R30	R19
Concrete Raised Floors	NA	NA	NA	R8
GLAZING				
Maximum U-value[3]	0.65	0.65	0.40	0.65
Maximum Total Area	NR	16%	14%	16%
Maximum Total Nonsouth Facing Area	9.6%	NR	NR	NR
Minimum South Facing Area	6.4%	NR	NR	NR
SOLAR HEAT GAIN COEFFICIENT[4]				
South Facing Glazing	0.15	0.15	NR	NR
West Facing Glazing	0.15	0.15	0.40	0.40
East Facing Glazing	NR	NR	0.40	0.40
North Facing Glazing	NR	NR	NR	NR
THERMAL MASS[5]	REQ	NR	REQ	NR
INFILTRATION CONTROL				
Continuous Barrier	NR	REQ	NR	NR
Air-to-Air Heat Exchanger	NR	REQ	NR	NR
SPACE HEATING SYSTEM[6]				
Electric Rsistant Allowed	NO	NO	YES[7]	NO
If Gas, AFUE =	78%	78%	78%	MIN
If Heat Pump,				
Split System HSPF[8] =	6.8	6.8	6.8	MIN
Single Package System HSPF =	6.6	6.6	6.6	MIN
SPACE COOLING SYSTEM				
If Split System A/C, SEER =	10.0	10.0	10.0	MIN
If Single Package A/C, SEER[9] =	9.7	9.7	9.7	MIN
DOMESTIC WATER HEATING TYPE				
System must meet budget, see 151(b)1 and 151(f)(9)	ANY	ANY	ANY[9]	ANY

LEGEND: NR = Not Required; NA = Not Applicable; REQ = Required; MIN = Minimum
SEE NOTES FOLLOWING TABLE NO. 1-Z16

TABLE NO. 1-Z15
ALTERNATIVE COMPONENT PACKAGES
FOR CLIMATE ZONE 15

COMPONENT	*PACKAGE*[1] *A*	*B*	*C*	*D*
BUILDING ENVELOPE				
Insulation Minimums[2]				
Ceiling	*R30*	*R38*	*R49*	*R38*
Wood Frame Walls	*R19*	*R19*	*R29*	*R21*
"Heavy Mass" Walls	*(R5.5)*	*(R4.5)*	*NA*	*(R4.76)*
"Light Mass" Walls	*[R7.0]*	*[R6.0]*	*NA*	*NA*
Below Grade Walls	*NA*	*NA*	*NA*	*R0*
Slab Floor Perimeter	*R7*	*R7*	*R7*	*NR*
Raised Floors	*R19*	*R19*	*R21*	*R19*
Concrete Raised Floors	*NA*	*NA*	*NA*	*R4*
GLAZING				
Maximum U-value[3]	*0.65*	*0.65*	*0.40*	*0.65*
Maximum Total Area	*NR*	*16%*	*16%*	*16%*
Maximum Total Nonsouth Facing Area	*9.6%*	*NR*	*NR*	*NR*
Minimum South Facing Area	*6.4%*	*NR*	*NR*	*NR*
SOLAR HEAT GAIN COEFFICIENT[4]				
South Facing Glazing	*0.15*	*0.15*	*0.40*	*0.40*
West Facing Glazing	*0.15*	*0.15*	*0.40*	*0.40*
East Facing Glazing	*NR*	*NR*	*0.40*	*0.40*
North Facing Glazing	*NR*	*NR*	*NR*	*NR*
THERMAL MASS[5]	*REQ*	*NR*	*REQ*	*NR*
INFILTRATION CONTROL				
Continuous Barrier	*NR*	*REQ*	*NR*	*NR*
Air-to-Air Heat Exchanger	*NR*	*REQ*	*NR*	*NR*
SPACE HEATING SYSTEM[6]				
Electric Rsistant Allowed	*NO*	*NO*	*YES*[7]	*NO*
If Gas, AFUE =	*78%*	*78%*	*78%*	*MIN*
If Heat Pump,				
Split System HSPF[8] *=*	*6.8*	*6.8*	*6.8*	*MIN*
Single Package System HSPF =	*6.6*	*6.6*	*6.6*	*MIN*
SPACE COOLING SYSTEM				
If Split System A/C, SEER =	*10.0*	*10.0*	*10.0*	*MIN*
If Single Package A/C, SEER[9] *=*	*9.7*	*9.7*	*9.7*	*MIN*
DOMESTIC WATER HEATING TYPE				
System must meet budget, see 151(b)1 and 151(f)(9)	*ANY*	*ANY*	*ANY*[9]	*ANY*

LEGEND: NR = Not Required; NA = Not Applicable; REQ = Required; MIN = Minimum
SEE NOTES FOLLOWING TABLE NO. 1-Z16

TABLE NO. 1-Z16
ALTERNATIVE COMPONENT PACKAGES
FOR CLIMATE ZONE 16

COMPONENT	PACKAGE[1] A	B	C	D
BUILDING ENVELOPE				
Insulation Minimums[2]				
Ceiling	R38	R38	R49	R38
Wood Frame Walls	R19	R19	R29	R21
"Heavy Mass" Walls	(R9.5)	(R7.0)	NA	(R4.76)
"Light Mass" Walls	[R9.5]	[R7.5]	NA	NA
Below Grade Walls	NA	NA	NA	R13
Slab Floor Perimeter	R7	R7	R7	R7
Raised Floors	R19	R19	R30	R19
Concrete Raised Floors	NA	NA	NA	R8
GLAZING				
Maximum U-value[3]	0.65	0.65	0.40	0.60
Maximum Total Area	NR	16%	14%	16%
Maximum Total Nonsouth Facing Area	9.6%	NR	NR	NR
Minimum South Facing Area	6.4%	NR	NR	NR
SOLAR HEAT GAIN COEFFICIENT[4]				
South Facing Glazing	NR	NR	NR	NR
West Facing Glazing	NR	NR	NR	NR
East Facing Glazing	NR	NR	NR	NR
North Facing Glazing	NR	NR	NR	NR
THERMAL MASS[5]	REQ	NR	REQ	NR
INFILTRATION CONTROL				
Continuous Barrier	NR	REQ	NR	NR
Air-to-Air Heat Exchanger	NR	REQ	NR	NR
SPACE HEATING SYSTEM[6]				
Electric Rsistant Allowed	NO	NO	YES[7]	NO
If Gas, AFUE =	78%	78%	78%	MIN
If Heat Pump,				
Split System HSPF[8] =	6.8	6.8	6.8	MIN
Single Package System HSPF =	6.6	6.6	6.6	MIN
SPACE COOLING SYSTEM				
If Split System A/C, SEER =	10.0	10.0	10.0	MIN
If Single Package A/C, SEER[9] =	9.7	9.7	9.7	MIN
DOMESTIC WATER HEATING TYPE				
System must meet budget, see 151(b)1 and 151(f)(9)	ANY	ANY	ANY[9]	ANY

LEGEND: NR = Not Required; NA = Not Applicable; REQ = Required; MIN = Minimum
SEE NOTES FOLLOWING TABLE NO. 1-Z16

NOTES TO THE LOW-RISE RESIDENTIAL PACKAGES IN TABLES NO. 1-Z1 THROUGH 1-Z16

1. *Package A is a passive solar design requiring a significant amount of south facing glazing, a small amount of non-south facing glazing, and a large area of thermal mass. Package B allows a small area of glazing, with light and heavy mass wall alternatives; some zones require continuous infiltration barriers and air-to-air heat exchangers. Package C is the only package that allows electric resistance space heating. Package C may be used only if the building is in an area (1) where natural gas is not currently available and (2) where extension of natural gas service is impractical, as determined by the natural gas utility. Package D allows more glazing area in some zones with moderately high insulation levels; slab edge insulation is required in climate zone 16.*

2. *The R-values shown for ceiling, wood frame wall and raised floor are for wood frame construction with insulation installed between the framing members. For alternative construction assemblies, see Section 151(f)1.A.*

   The heavy mass wall R-value in parentheses is the minimum R-value for the entire wall assembly if the wall weight exceeds 40 pounds per square foot. The light mass wall R-value in brackets is the minimum R-value for the entire assembly if the heat capacity of the wall meets or exceeds the result of multiplying the bracketed minimum R-value by 0.65. Any insulation installed on heavy or light mass walls must be integral with or installed on the outside of the exterior mass. The inside surface of the thermal mass, including plaster or gypsum board in direct contact with the masonry wall, shall be exposed to the room air. The exterior wall used to meet the R-value in parentheses cannot also be used to meet the thermal mass requirement.

3. *For glazing U-value rating procedures and labeling requirements see Section 116(a)2.*

4. *If the package specifies a solar heat gain coefficient the builder shall meet the requirements of Section 151(f)3.*

5. *If the package requires thermal mass, meet the requirements of Section 151(f)4.*

6. *Automatic setback thermostats must be installed in conjunction with all space heating systems, in accordance with Section 151(f)9.*

7. *Ducts in Package C shall be insulated to an installed value of at least R-8.*

8. *HSPF means "heating seasonal performance factor."*

9. *Electric resistance water heating is allowed as the main water heating source in Package C only if the water heater is located within the building envelope and a minimum of 25 percent of the energy for water heating is provided by a passive or active solar system or a wood stove boiler. The wood stove boiler credit is not allowed in climate zones 8, 10, and 15, nor in localities that do not allow wood stoves.*

Chapter 4: Compliance Through Quality Construction

4.0 SUMMARY

This chapter introduces the new features for the 1998 Energy Efficiency Standards (standards) that award compliance credit for improvements in the quality of design and installation of ducts and of construction of less leaky building envelopes. These new features include improved computer modeling methods and new compliance credit options. Many of the compliance credit options require installer diagnostic testing and certification, and independent diagnostic testing and field verification by a certified Home Energy Rater.

This chapter also brings attention to the *Procedures for HVAC System Design and Installation* given in Appendix K. These procedures comprehensively address all aspects of quality installation of HVAC equipment and duct systems. These procedures are intended to produce duct systems that are well designed, installed and performance tested to verify their effectiveness in delivering comfort and energy efficiency to home occupants. By following these procedures and the complementary compliance requirements, substantial compliance credit can be earned for reduced duct leakage, ACCA Manual D design, and possibly reduced duct surface area.

CHAPTER OVERVIEW:

Part	Topic	Page
4.0	**Summary**	**4-1**
4.1	**Duct Efficiency**	**4-2**
	A. Overview	4-2
	B. Duct Location	4-2
	C. Ducts in Conditioned Space	4-3
	D. Ducts in Attics with Radiant Barriers	4-3
	E. Duct R-Value	4-3
	F. Duct Surface Area	4-4
	G. Duct Leakage	4-4
	H. ACCA Manual D Design	4-4
4.2	**Infiltration and Ventilation**	**4-5**
	A. Overview	4-5
	B. Indoor Air Quality	4-5
	C. Optimal Building Envelope Leakage	4-5
	D. New Algorithms	4-5
	E. Blower Door Testing	4-6
	F. Mechanical Supply Ventilation Requirements for Unusually Tight Buildings	4-6
	G. Mechanical Ventilation Requirements for Low Leakage Designs	4-6
	H. Envelope Leakage Credit for Reduced Duct Leakage	4-7
	I. Air Retarding Wrap Credit	4-7
	J. Envelope Leakage Credit for Reduced Duct Leakage in Combination with Air Retarding Wrap	4-7
4.3	**Diagnostics/Field Verification**	**4-7**
	A. Overview	4-7
	B. California Home Energy Rating Systems	4-8
	C. HERS Required Verification & Diagnostic Testing	4-8
	D. Installer Certification	4-9
	E. Sampling Procedures	4-9
	F. Responsibilities & Documentation	4-11
4.4	**Procedures for HVAC System Design and Installation**	**4-13**

4.1 DUCT EFFICIENCY

A. Overview

For the 1998 standards, the Commission has approved new algorithms and procedures for determining duct efficiency, and has created new options for compliance credit for improvements that can be made that will increase duct efficiency. Duct efficiency can be impacted by the following parameters

1. The location of the duct system (attic, crawlspace, basement or other).
2. The installation of the duct system inside conditioned space.
3. The installation of a radiant barrier in attics with ducts.
4. The insulation level of the ducts.
5. The surface area of the ducts.
6. The air leakage level of the duct system.
7. The design of the duct system to ACCA Manual D.

There are two calculation procedures to determine seasonal air distribution efficiency using either (1) default input assumptions or (2) diagnostic measurement values (see also Part 4.3). The computer program will use default assumptions for the proposed design when the user does not intend to make improvements in duct efficiency. For low-rise, single-family buildings compliance credit can be taken for proposed designs that make any duct efficiency improvement. For dwellings other than low-rise, single-family buildings compliance credit can be taken for increased duct insulation only. The program otherwise will use default assumptions for all proposed designs of dwellings that are not low-rise, single-family dwellings.

Compliance credit for many of the duct efficiency improvements require diagnostic testing and verification by a Commission approved HERS provider/rater (see section 4.3 for Diagnostics and Field Verification procedures and requirements). Required methods for conducting diagnostic testing and field verification for duct efficiency improvements are described in detail in *Appendix F* of the *Alternative Calculation Method Approval Manual* which is included in the *Residential Energy Conservation Manual* as Appendix J.

Compliance credit can not be taken for any duct efficiency improvement unless the duct system is a fully ducted system. Duct efficiency credits may not be taken for any system that uses building cavities such as plenums or platform returns.

Also, when any duct efficiency credit is claimed, the duct connections and leaks shall not be sealed with cloth back rubber adhesive tapes (i.e., duct tapes) unless such tape is used in combination with mastic and drawbands. This requirement must be specified in the HERS Required Verification listings on the CF-1R and the CF-2R.

When more than one HVAC system serves the building or dwelling, the duct efficiency is determined for each system based on the improvements made to the each duct system, and a conditioned floor area-weighted average of the efficiencies of each separate system is determined.

B. Duct Location

Where ducts are installed has a significant effect on the efficiency of distributing heated or cooled air. Therefore, the location of ducts affects the way the program models the overall efficiency of space conditioning equipment. Ducts are typically installed in attics. This is the location that results in the greatest energy loss. This is the default location for compliance purposes. Ducts located in crawlspaces, basements or in conditioned space can be significantly more efficient. Ducts in other spaces (i.e., not in crawlspaces, basements or in conditioned space; e.g., in garages) are assumed to perform the same as ducts in attics. When compliance credit is being taken for improved duct location, the installer must certify on the CF-6R that the ducts are installed in that location.

A default compliance credit for ducts located in crawlspaces or basements may be approved by the local enforcement agency without HERS rater verification. The default assumptions for ducts installed in crawl-

spaces or basements apply only to buildings with all supply ducts installed in the crawl-space or basement. A duct layout must be included in the plans that show that all of the supply registers are located in the floor. If any story of a building has any supply registers located more than two feet above the floor, the duct location for that story must be modeled as 100% in the attic. The computer program will automatically specify that all supply registers for each story are located in the floor in the *Special Features and Modeling Assumptions* listing to aid the local enforcement agency's inspections.

Proposed duct systems with a complete ACCA Manual D design, including the duct layout and design on the plans, may allocate duct surface areas in more detail in the computer program. The distribution of duct surface areas by location must appear on the *HERS Required Verification* list for verification by an approved HERS rater.

C. Ducts Inside Conditioned Space

Credit is given when most or all of the ducts of a ducted HVAC system are installed inside conditioned space. Credit can be taken for ducts inside the conditioned space for two situations: 1) Less than 12 lineal feet of ducts within unconditioned space; and 2) all ducts (and the air handler) within the conditioned space. The first situation would typically apply to a ducted furnace or heat pump inside a garage with a relatively short duct run from the air handler to the conditioned space.

Compliance credit can also be taken for duct systems where all ducts including the air handler are installed inside conditioned space. Ducted, central gas furnaces installed in this manner will need to have provisions for supplying outdoor air for combustion and combustion product venting without using draft relief openings. These ducts in conditioned space options must be specified on the *HERS Required Verification* list for verification by an approved HERS rater.

Non-central gas furnaces [those listed in Table G-1 of Appendix G in this manual] such as wall furnaces are compared to a *Standard Design* using a non-central gas furnace with no ducts and the minimum allowed efficiency for the type of furnace used in the *Proposed Design*. Similarly, non-central air conditioners [those listed in Table G-3 of Appendix G of this manual] are compared to a similar non-central air conditioner without ducts in the *Standard Design*. Other systems, such as hydronic heating systems with a central heater or boiler and multiple terminal units, are considered central HVAC systems that are compared to a ducted system in the *Standard Design* and may receive compliance credit for "less than 12 lineal feet of ducts in conditioned space." Electric baseboard heating systems may be modeled as "all ducts in conditioned space."

D. Ducts in Attics with Radiant Barriers

Installation of a radiant barrier in the attic increases the duct efficiency by lowering attic summer temperatures. Compliance credit for radiant barriers requires listing of the radiant barrier in the *Special Features and Modeling Assumptions* listings to aid the local enforcement agency's inspections. Compliance credit for a radiant barrier does not require HERS rater verification.

E. Duct R-Value

The R-value of duct insulation is specified for ducts in unconditioned space. R-4.2 is a mandatory feature and is the default R-value. Compliance credit can be taken for additional duct insulation. If ducts with multiple R-values are installed, the lowest duct R-value shall be used for the entire duct system. In some cases the space on top of the duct boot is limited and can not be inspected. For this reason, the insulation R-value within two feet of the boot may be excluded from the determination of the overall system R-value. When the modeled R-value is greater than 4.2, the computer program must report the specified R-value in the *Special Features and Modeling* Assumptions listing to aid the local enforcement agency's inspections. Compliance

credit for Increased duct insulation does not require HERS rater verification.

F. Duct Surface Area

The default values for duct surface areas outside of conditioned space are 27% of conditioned floor area (CFA) for supply duct surface area; 5% of CFA for return duct surface area in single story dwellings and 10% of CFA for return duct surface area in dwellings with two or more stories. Compliance credit can be taken for proposed designs with reduced duct surface areas outside of conditioned space. The proposed design can specify field measured reduced duct surface area. If compliance credit is taken for reduced surface area, the installer must certify the installed surface area on the CF-6R.

Reduced duct surface areas must be shown to preserve adequate airflow to receive duct efficiency credit. Consequently, compliance credit for measured reduced duct surface area can only be taken in conjunction with ducts, which are designed to conform to ACCA manual D (including duct layout and design specifications on the plans). The total speci fied measured surface area and its subcom ponent allocation by duct location must be in the *HERS Required Verification* listing, and be verified by a certified HERS rater. Credit for measured reduced duct surface area also requires that the HERS rater verify the consitency of the actual duct system with the ACCA Manual D design as specified in section H below.

G. Duct Leakage

The default duct air leakage is set at 22% of fan flow. Compliance credit can be taken for reduced duct leakage if duct leakage is diagnostically measured and verified to be less than 6% of fan flow.

The target duct leakage is determined as a percentage of the installed system capacity or from default calculations as a percentage of the conditioned floor area when the HVAC equipment is not installed at the time of testing by the duct installer. If the HVAC system is installed at the time of installer testing, the leakage target is 6% of the supply fan capacity, calculated as 400 CFM per ton of air conditioning or 21.7 CFM per 1,000 Btu/hour of furnace capacity, whichever is larger. If the HVAC equipment is installed but the size is not known at the time of installer testing, the leakage target is 6% of 0.70 CFM per square foot of conditioned floor area for climate zones 8 to 15 and 0.50 CFM per square foot of conditioned floor area for the remaining climate zones.

If the HVAC equipment is not installed at the time of installer testing, the leakage target is 4% of 0.70 CFM per square foot of conditioned floor area for climate zones 8 to 15 and 0.50 CFM per square foot of conditioned floor area for the remaining climate zones.

In addition to installer leakage testing and certification, compliance credit for duct leakage reduction requires diagnostic testing and verification by a certified HERS rater. The *HERS Required Verification* listing and the CF-6R must specify the target duct leakage(s) for verification by the HERS rater.

H. ACCA Manual D Design -- Duct Layout and System Fan Flow

The default condition assumes that the duct system has not been designed to meet ACCA manual D. Compliance credit can be taken if the duct system is designed to meet ACCA manual D, and a duct layout, engineering calculations, and duct system specifications are in the plans. The plans must specify either the system fan flow determined by the ACCA manual D design or the installation of a thermostatic expansion valve. The installation of a thermostatic expansion valve must be verifiable through installation of a removable access panel on the cooling coil.

Compliance credit for ACCA manual D design requires diagnostic testing and verification by an approved HERS rater. The system fan flow or the installation of a thermostatic expansion valve must be specified on the *HERS Required Verification* listing. The HERS rater must verify the existence of the ACCA man-

ual D design, specifications and layout, and verify the consistency of the actual HVAC distribution system with the design. This consistency check includes verifying that space-by-space load and supply air calculations were done for each space, that duct runs are no longer than the design, that the ducts are not compressed or constricted, and that duct sizes and insulation R-values match the design. The HERS rater also must either 1) diagnostically test the system fan flow and verify that the fan flow specified by the ACCA manual D design is achieved or 2) remove the access panel and verify the installation of the thermostatic expansion valve.

4.2 INFILTRATION & VENTILATION

A. Overview

For the 1998 standards, the Commission has approved new algorithms for infiltration and ventilation, and has created new options and procedures for compliance for reduced building envelope air leakage. The replacement of conditioned indoor air by unconditioned outdoor air creates heat gains and heat losses for a conditioned building. Infiltration is the unintentional replacement of conditioned air with unconditioned air through leaks or cracks in the building envelope. Ventilation is the intentional replacement of conditioned air with unconditioned air through opening windows or mechanical ventilation.

Ventilation in residential buildings is typically achieved by opening windows either to provide natural ventilation for cooling purposes or to reduce stuffiness or odors. The use of continuous mechanical ventilation provides a greater degree of control of the rate of exchange of conditioned and unconditioned air. Continuous mechanical ventilation can be provided through either supply fans or exhaust fans. Providing **supply** fan ventilation is also a means to avoid building depressurization, which otherwise can lead to backdrafting of combustion appliances in “unusually tight” buildings.
Reduction in building envelope air leakage decreases infiltration and can result in significant energy savings especially in climates with more severe winter and summer conditions. It also can result in improved building comfort, reduced moisture intrusion, and can avoid introduction of air pollutants due to leakage from garages or attics.

B. Indoor Air Quality

ASHRAE Standard 62-89 *Ventilation for Acceptable Indoor Air Quality* specifies a minimum effective annual air exchange rate. This minimum rate is the combination of infiltration, ventilation through window opening and continuous mechanical ventilation if supplied. For typical California homes infiltration is excessive and the ASHRAE 62 standard is met or exceeded with occasional window opening. As building envelope leakage is reduced, the frequency for when windows need to be opened slightly to relieve stuffiness, remove odors and provide indoor air quality increases.

C. Optimal Building Envelope Leakage

From an energy standpoint there is an optimal level of reduced building envelope air leakage if additional ventilation is provided through opening windows alone. Below that optimal building envelope air leakage, the energy penalty of increased frequency of window opening exceeds the energy savings of the reduction in infiltration. If building envelope leakage is reduced substantially below the optimal energy savings level, a level that the Commission considers to be “unusually tight” per the Uniform Mechanical Code can be reached where it is necessary to provide continuous mechanical supply ventilation.

D. New Algorithms

The new algorithms approved by the Commission keep track of the combination of infiltration, ventilation through opening windows, and continuous mechanical ventilation, if any, to model conformance with the ASHRAE 62 standard and determine the energy consequences. Approved computer programs can be used to determine optimal building enve-

lope leakage levels that can be specified for compliance purposes.

Approved computer programs use a default building envelope air leakage (expressed in terms of Specific Leakage Area, SLA) for proposed designs when the user does not intend to take compliance credit for building envelope sealing. The default is set at 4.9 SLA. Careful attention to building envelope sealing would result in significantly lower SLA levels.

E. Blower Door Testing

Compliance credit can be taken for reduced building envelope leakage verified through diagnostic blowerdoor testing as specified by ASTM E-779-87, *Standard Test Method for Determining Air Leakage Rate by Fan Pressurization*. Users of approved computer programs can determine the compliance credit available for specific SLA levels (or target blowerdoor test results). The program will automatically convert that SLA level to the target $CFM50_H$ required for the blowerdoor testing to achieve the modeled SLA, and specify that target $CFM50_H$.level in the *HERS Required Verification* listing on the CF-1R and C-2R. The installer must do testing to demonstrate that building envelope leakage has been reduced below the target $CFM50_H$ level, and document the blowerdoor test results on the CF-6R. An approved HERS rater must do blowerdoor testing to verify that the target $CFM50_H$ has been achieved (see section 4.3 for Diagnostics and Field Verification procedures and requirements).

F. Mechanical Supply Ventilation Requirements for Unusually Tight Buildings

The program will also report in the *HERS Required Verification* section the minimum allowed $CFM50_H$ (corresponding to an SLA of 1.5) unless continuous mechanical **supply** ventilation is installed. This minimum allowed value without continuous mechanical supply ventilation is considered by the Commission to be “unusually tight” per the requirements of the Uniform Mechanical Code.

The *HERS Required Verification* section of the CF-1R must state that when the minimum blowerdoor testing reveals that the $CFM50_H$ is less than the minimum allowed value, corrective action must be taken either to intentionally increase the infiltration or provide for continuous mechanical **supply** ventilation adequate to maintain the residence at a pressure greater than -5 Pascal relative to the outside air pressure with other continuous ventilation fans operating. Blowerdoor testing must be done by both the installer and the HERS rater to verify compliance with these requirements.

The total power consumption of the continuous supply ventilation fans and continuous exhaust fans are required inputs when compliance credit is taken for reduced building envelope leakage and mechanical ventilation is installed.

G. Mechanical Ventilation Requirements for Low Leakage Designs

When the user of compliance programs chooses the proposed design envelope leakage to be below 3.0 SLA, continuous mechanical ventilation (either exhaust or supply ventilation) must be installed. Whenever continuous mechanical ventilation is installed, a minimum capacity of 0.047 CFM per square foot of conditioned floor area is required. This requirement for installation of continuous mechanical ventilation is reported automatically by the program in the *HERS Required Verification* section of the CF-1R and C-2R. The installer and the HERS rater must confirm compliance with these requirements.

When reduced building envelope leakage or continuous mechanical ventilation is specified for compliance, the computer program will automatically include in the *Special Features and Modeling Assumptions* section a statement that the homeowner’s manual provided by the builder to the homeowner must include instructions that describe how to use the operable windows or continuous mechanical ventilation for proper ventilation.

The total power consumption of the continuous supply ventilation fans and continuous exhaust fans are required inputs when compliance credit is taken for reduced building envelope leakage and mechanical ventilation is installed.

H. Envelope Leakage Credit for Reduced Duct Leakage

If compliance credit is **not** taken for reduced building envelope air leakage through diagnostic testing, a special "default" compliance credit can be taken for building envelope leakage reduction resulting from reduced duct leakage. To qualify for this credit all requirements of section 4.4.I4 *Duct Leakage* must be met. A "default" reduction in Specific Leakage Area of 0.50 is allowed for this credit.

I. Air Retarding Wrap Credit

If compliance credit is **not** taken for reduced building envelope air leakage through diagnostic testing, a special "default" compliance credit can be taken for building envelope leakage reduction resulting from installation of an air retarding wrap (i.e., housewrap). To qualify for the "default" compliance credit, an air retarding wrap must be tested and labeled by the manufacturer to comply with ASTM E1677-95, *Standard Specification for an Air Retarder (AR) Material or System for Low-Rise Framed Building* Walls, and have a minimum perm rating of 10. Insulative sheathing and building paper do not qualify as air retarding wraps.

The air-retarding wrap must be installed per the manufacturer's specifications that must be provided to comply with ASTM E1677-95. In particular, the air-retarding wrap must meet the following installation requirements:

- The air retarding wrap must be applied continuously;
- All tears or breaks must be repaired with manufacturer approved tape.
- All horizontal seams must be lapped in a shingle-like manner and taped.
- All vertical seams must be lapped and.
- All windows and penetrations must be taped or caulked.
- The air-retarding wrap must be taped or otherwise sealed at the slab junction.

When compliance credit is taken for an air-retarding wrap, the computer program will automatically include the air retarding wrap and the above specifications in the *Special Features and Modeling* Assumptions section of the CF-1R and C-2 to facilitate inspection by the local enforcement agency. Compliance credit for an air retarding wrap does not require HERS rater verification.

Compliance credit is provided for a "default" reduction in Specific Leakage Area of 0.50.

J. Envelope Leakage Credit for Reduced Duct Leakage in Combination with Air Retarding Wrap

The default credits in **G** and **H** may be added when both measures are installed and the criteria in **G** and **H** are both met.

4.3 DIAGNOSTICS AND FIELDVERIFICATION

A. Overview

The new algorithms and credits for reduced building envelope leakage and for improved HVAC distribution (duct) efficiency require special enforcement procedures. All credits for improved efficiency for these measures are listed either in the *Special Features and Modeling Assumptions* listings or the *HERS Required Verification listings* of the CF-1R Certificate of Compliance Form and the CF-2 Form. The information on the CF-1R, including these listings, is required to be on the plans. In addition, the CF-4 Form and some of the information on the CF-6R, Installation Certificate document the qualifications for the use of these energy credits.

The information that is only in the *Special Features and Modeling Assumptions* listings,

such as credit for air retarding wraps or duct insulation above R=4.2, is verified by the local enforcement agency. Information found in the *HERS Required Verification* must be verified by a HERS rater certified by a Commission-approved HERS provider.

B. California Home Energy Rating Systems

The Commission approves home energy rating system (HERS) providers in California who conform with *California HERS* regulations (Title 20, Chapter 4, Article 8, Sections 1670-1676). Approved HERS providers are authorized to certify raters and maintain quality control over ratings. Ratings are based on visual inspection and diagnostic testing of the physical characteristics and energy efficiency features of houses, as constructed.

When compliance documentation indicates field verification and diagnostic testing of specific energy efficiency improvements as a condition for those improvements to qualify for Title 24 compliance credit, an approved HERS provider and certified rater must be used to conduct the field verification and diagnostic testing. HERS providers and raters are considered special inspectors by building departments, and must demonstrate competence, to the satisfaction of the building official, for the visual inspections and diagnostic testing. The HERS provider and rater must be independent entities from the builder or subcontractor installer of the energy efficiency improvements being tested and verified, and can have no financial interest in the installation of the improvements. The procedures for HERS required field verification and diagnostic testing are specified in this chapter and in the *Alternative Calculation Method Approval Manual*.

Duct Efficiency Improvements and Building Envelope Air Sealing that Require HERS Verification and Testing are:

Duct Efficiency Improvements

- Duct sealing (duct leakage testing)
- Duct design (ACCA Manual D verification and fan flow testing)
- Duct location (verification)
- Duct surface area (verification)

Building envelope Air Sealing using diagnostic blowerdoor testing—includes reduced infiltration and continuous mechanical ventilation installation

Duct Efficiency Improvements and Building Envelope Air Sealing that Do Not Require HERS Verification and Testing, Only Building Department Inspection are:

- Duct insulation
- Radiant barriers
- Supply duct location in crawlspaces or basements when all supply registers are in the floor (default compliance credit)
- Building envelope air sealing associated with duct sealing (default compliance credit)
- Building envelope air sealing associated with air retarding wrap installation (default compliance credit)

C. HERS Required Verification and Diagnostic Testing

Calculation of the energy consumption associated with increased duct efficiency and reduced building envelope leakage requires a computer compliance method. Improvements in duct efficiency resulting from duct air sealing, ACCA Manual D design and installation, and building envelope sealing beyond improvements covered by default assumptions, require diagnostic testing and field verification. Improvements in duct efficiency resulting from duct surface area reductions and duct location improvements beyond those covered by default assumptions require field verification. For compliance credit to be claimed for these features, they must be listed as *HERS Verification Required* features on the *Certificate of Compliance* (CF-1R) and the *Computer Method Summary* (C-2R). Such verification constitutes “eligibility and installation criteria” for these features. Diagnostic testing and field verification shall be per-

formed as specified in Chapters 3 and 4, and Appendix F of the *Alternative Calculation Method Approval Manual* (also included in the *Residential Energy Conservation Manual* as `Appendix J)

D. Installer Certification

When compliance credit is claimed for duct sealing, ACCA Manual D design and installation, or envelope sealing, builder employees or subcontractors must

- complete diagnostic testing, and
- certify the diagnostic test results and that the work meets the requirements for compliance credit on the CF-6R.

For duct sealing completed at the rough-in stage of construction using aerosol sealant closures, builder employees or subcontractors must:

- at rough-in, complete the fan pressurization test and certify on the CF-6R the diagnostic results,
- after installation of the interior finishing wall, verify sealing of the ducts using either the house pressure test or the pressure pan test or by visual inspection of all duct connections (in cluding duct to air handler connections), and
- certify on the CF-6R the diagnostic results and that the work meets the requirements for compliance credit.

When compliance credit is claimed for duct surface area reductions and duct location improvements beyond those covered by default assumptions, builder employees or subcontractors must

- record on the CF-6R the duct surface area in each duct location, and
- certify on the CF-6R that the duct surface area and locations match those on the plans, and that the work meets the requirements for compliance credit. Installer certifications are required for each and every house.

E. Sampling Procedures

At the builder's option HERS field verification and diagnostic testing shall be completed either for each house or for a sample of houses of the same model. To be considered the same model, houses shall be in the same subdivision and have the same energy designs and features, including the same floor area and volume, as shown on the CF-1R except that a house may differ in its shading.

Field verification and diagnostic testing for compliance credit for duct sealing must use the diagnostic duct leakage from fan pressurization of the ducts (see section 4.3.8.2.1 of *Appendix F* of the *Alternative Calculation Method Approval Manual -- Appendix J* of the *Residential Energy Conservation Manual).*

The builder must provide the HERS provider a copy of the CF-6R containing the installer certifications. Prior to completing field verification and diagnostic testing, the HERS rater must first verify that the installer certifications have been completed.

If the builder chooses the sampling option, the procedures described in this section shall be followed.

Initial Field Verification and Testing

Initial testing allows the builder to identify and correct any potential construction flaws or practices in the build out of each model.

The HERS rater must diagnostically test and field verify the first house of each model. If field verification and diagnostic testing determines that the requirements for compliance are met, the HERS rater will provide a signed and dated *Certificate of Field Verification and Diagnostic Testing* (CF-4R) for that house to the builder and the HERS provider.

Sample Field Verification and Testing

After the initial testing is complete, the builder must identify a group of houses of the same model from which a sample will be selected for testing, and notify the HERS provider. The group of houses must include those houses expected to be ready for diag-

nostic testing within a 180-day period. The builder must identify these houses by location of County, City and either the street address or the subdivision and lot number, and the names and license numbers of subcontractors responsible for the duct installation, duct sealing or envelope sealing that requires diagnostic testing or field verification. The builder may add additional houses during the 180-day period by notifying the HERS provider.

The HERS provider must select a minimum of one out of every seven sequentially completed houses in the group, rounded up to the next whole number, for diagnostic testing and field verification. When several houses are ready for testing at the same time, the HERS provider must randomly select the houses to be tested. The HERS rater must diagnostically test and field verify the houses selected by the HERS provider.

If field verification and diagnostic testing determines that the requirements for compliance are met, the HERS rater provides a signed and dated *Certificate of Field Verification and Diagnostic Testing* (CF-4R) to the builder and the HERS provider. The *Certificate* will report the successful diagnostic testing results and conclusions regarding compliance for the tested house.

The HERS rater must also provide a signed and dated *Certificate of Field Verification and Diagnostic Testing* to the builder and the HERS provider for up to six additional houses from the group. The *Certificate* must not be provided for houses in which the feature requiring field verification and diagnostic testing is not installed, sealed or completed.

The 180 day period officially begins on the date of the first *Certificate of Field Verification and Diagnostic* Testing for the group. The HERS provider must determine the date the 180 day period ends, and must notify the builder and rater. Houses within the group for which a *Certificate of Field Verification and Diagnostic Testing* is not complete within 180 days from the date of the first *Certificate* for the group, as determined by the HERS provider, shall either be individually tested or be included in a group of houses in a subsequent sample period.

Whenever the builder changes subcontractors responsible for the feature that is being diagnostically field verified and tested, the builder must notify the rater of any subcontractors who have changed, and terminate sampling for the identified group. The rater shall cease certification. Whenever the builder changes HERS providers, the builder shall terminate sampling.

All houses using *HERS Required Verification* features for compliance that were installed by previous subcontractors or were subject to verification and testing under the supervision of a previous HERS provider, for which the builder does not have a completed *Certificate of Field Verification and Diagnostic Testing* must either be individually tested or included in a new group for sampling. Houses with installations completed by new subcontractors must either be individually tested or be included in a new sampling group following a new *Initial Field Verification and Testing*.

The HERS provider must not notify the builder when sample testing is going to occur before the work to be tested is complete. After the builder is notified by the HERS provider as to when testing will occur, the builder cannot perform additional work on the features that will be tested.

Re-sampling, Full Testing and Corrective Action

When a failure is encountered during sample testing, the HERS rater must conduct re-sampling to assess whether the failure is unique or the rest of the houses are likely to have similar failings. The HERS provider must select for re-sampling one out of seven (rounded up to the next whole number) of all of the untested houses in the group that have been constructed since the beginning of the 180-day time period.

If testing in all houses in the re-sample confirms that the requirements for compliance credit are met, then the house with the failure is not considered an indication of failure in the other houses in the group. The builder must take corrective action for the house with the failure, and then the HERS rater must retest to verify compliance and issue a

signed and dated *Certificate of Field Verification and Diagnostic Testing* to the builder. Sampling shall then resume for the remainder of the group.

If field verification and testing in any of the houses in the re-sample results in a second failure, the builder must take corrective action in all unoccupied houses in the group that were not tested but for which a *Certificate of Field Verification and Diagnostic Testing* was completed. The HERS rater must conduct field verification and diagnostic testing in each of these houses to verify that problems have been corrected and that the requirements for compliance have been met, and must report to the HERS provider.

Builders must offer at no charge to homeowners in occupied houses in the group to complete field verification and testing and corrective action, if necessary. Homeowners may decline this offer. Builders must report the identifying location of any house in which the homeowner declines field verification and testing and corrective action to the HERS provider. The HERS provider must verify that the builder has made this offer. If a homeowner in an occupied house declines this offer, field verification, testing and corrective action will not be required for that house and the house will no longer be considered a part of the group. If a homeowner accepts this offer, the builder must take corrective action. The HERS rater must then conduct field verification and diagnostic testing to verify that problems have been corrected and that the requirements for compliance have been met, and shall report to the HERS provider.

The HERS provider must file a report with the building department explaining all action taken (including field verification, testing, corrective action, offers to homeowners for testing and corrective action, and homeowner declines of such offers) to bring into compliance houses for which a signed and dated *Certificate of Field Verification and Diagnostic Testing* has been provided to the builder. If corrective action requires work not specifically exempted by Section 112 of the UMC or Section 106 of the UBC, the builder must obtain a permit from the building department prior to commencement of any of the work.

Until corrections, field verification and testing of all houses in the group is complete, or homeowners in occupied houses have declined corrective action, houses in the group shall not be certified for compliance. If additional houses are completed during the time required to correct, field verify and test the previously completed houses in the group, the rater shall individually field verify and diagnostically test those additional houses to confirm that the requirements for compliance credit are met. Once corrections, field verification and testing is completed for all houses that have a *Certificate of Field Verification and Diagnostic Testing*, excepting those where homeowners have declined corrective action, the builder must either resume sampling for the remainder of the houses in the group or terminate the group.

If corrections are made to a sampled house to avoid a failure, corrections, field verification and testing shall be performed on 100% of the houses in the group that are constructed since the beginning of the 180-day sampling period.

F. Responsibilities and Documentation

Builder

Builder employees or sub-contractors performing work that requires HERS rater field verification and diagnostic testing shall certify on the CF-6R the diagnostic test results and that their work meets the requirements for compliance credit.

The builder shall also:

(1) Furnish the HERS provider with the identifying location of the group of houses to be included in the sample for field verification and diagnostic testing and the expected date on which sample testing can begin;

(2) Supply the HERS provider with a copy of the CF-6R signed by the builder employees or sub-contractors certifying that diagnostic testing and installation meet the requirements for compliance credit; and

(3) Provide a *Certificate of Field Verification and Diagnostic Testing* signed and dated by the HERS rater to the building official in conjunction with requests for final inspection for each house

When resampling reveals a failure the builder shall:

(1) Take corrective action as required in all unoccupied houses in the group and in occupied houses in the group where homeowners have accepted field verification, testing and corrective action.

(2) Offer at no charge to homeowners of occupied houses in the group to complete field verification, testing and corrective action if necessary. Homeowners may decline to have field verification and testing and corrective action completed. Builders shall report the identifying location of any house in which the homeowner declines field verification and testing and corrective action to the HERS provider.

HERS Provider and Rater

For a period of 5 years from the date of the field verification and diagnostic testing of a group of houses, the HERS **providers** shall maintain a list of:

- Houses in the group from which sampling is drawn
- Houses selected for sampling
- Houses sampled
- Results of the sampling
- Houses selected for re-sampling
- Houses that were re-tested
- Corrective action taken
- Copies of all *Certificates of Field Verification and Diagnostic Testing*

The HERS **raters** providing the diagnostic testing and verification shall:

- Sign and date a *Certificate of Field Verification and Diagnostic Testing* certifying that they have verified that the requirements for compliance credit were met;
- Provide, for the tested house and up to six other houses from the group for which compliance is verified based on the results of the sample, a *Certificate of Field Verification and Diagnostic Testing* to the builder and the HERS provider;
- Provide a separate *Certificate of Field Verification and Diagnostic Testing* for each house the rater determines has met the diagnostic requirements for compliance;
- Identify on the *Certificate of Field Verification and Diagnostic Testing* if the house was tested or if it was an untested house approved as part of sample testing; and
- Not sign a *Certificate of Field Verification and Diagnostic Testing* for a house that does not have a CF-6R signed by the installer as required in 5.7B and D.

If field verification and testing on a sampled house identifies a failure to meet the requirements for compliance credit, the HERS **rater** shall report to the HERS provider and the builder that re-sampling will be required. If re-sampling identifies another failure, the HERS rater shall report to the HERS provider and the builder that corrective action and full testing will be required for all the untested houses in the group that have been constructed since the beginning of the 180-day period. This report shall specify the identifying location of all houses that must be corrected and fully tested.

The HERS **provider** shall also report to the builder once diagnostic testing and field verification has shown that the failures are corrected in all of the houses except those for which the homeowner has declined field verification, testing and corrective action.

When individual house testing and verification confirms that the requirements for compliance were met, the HERS **rater** shall provide a *Certificate of Field Verification and Diagnostic Testing* for each previously untested/unverified house in the group and for each additional house of the same model completed during the time required to correct,

verify and test the previously untested/unverified houses in the group.

The HERS **provider** shall report to the building department explaining all action taking (including field verification, testing, corrective actions, offers to homeowners for testing and corrective action, and homeowner declines for testing, verification and corrective action) to bring into compliance houses for which a signed and dated *Certificate of Field Verification and Diagnostic Testing* has been provided to the builder.

Building Department

The building department at its discretion may require independent testing and field verification in conjunction with the building department's required inspections, and/or observe the diagnostic testing and field verification performed by builder employees or subcontractors and the certified HERS rater in conjunction with the building department's required inspections to corroborate the results documented on installer certifications, and in the *Certificate of Field Verification and Diagnostic Testing*. For houses that have used a compliance alternative that requires field verification and diagnostic testing, the building department shall not approve a house for occupancy until the building department has received from the builder a *Certificate of Field Verification and Diagnostic Testing* signed and dated by the HERS rater. The building department at its discretion may request that the HERS provider report failures, corrective actions, need for full testing and homeowner declines for testing, verification and corrective action.

4.4 PROCEDURES FOR HVAC SYSTEM DESIGN AND INSTALLATION

The 1998 standards introduce new compliance credits that reward incremental improvements in the quality of duct system design, sealing and installation. Builders can choose to incorporate these improvements individually.

However, a truly quality duct system can not be assured without comprehensive attention to all aspects of duct design, sealing and installation, and performance testing of the system to verify that the system actually delivers comfort to all portions of the home in an energy efficient manner. Incremental improvement, for example through duct sealing alone, may fail to result in a well performing duct system.

The *Procedures For HVAC System Design and Installation* specified in Appendix K are intended to produce duct systems that are well designed, installed and performance tested to verify their effectiveness in delivering comfort and energy efficiency to home occupants. These procedures comprehensively address all aspects of quality installation of HVAC equipment and duct systems.

By following these procedures and the complementary compliance requirements, substantial compliance credit can be earned. Systems that meet the *Procedures For HVAC System Design and Installation* and meet compliance requirements would gain credit for the combination of reduced duct leakage, ACCA Manual D design, and possibly reduced duct surface area.

The Commission highly recommends that builders insure that all aspects of the *Procedures For HVAC System Design and Installation* given in Appendix K are followed, and take advantage of the combination of compliance credits that would result.

Chapter 5: Computer Methods

5.0 SUMMARY

This chapter explains the use of approved public domain and ***Alternative Calculation Method (ACM)*** computer programs to show compliance with the annual energy budget requirement of the *Energy Efficiency Standards* (Standards). These ***computer methods*** represent one of two basic compliance paths explained in this chapter and Chapter 3.

The introductory section outlines the basis of the computer method approach and the ACM approval process for the use of computer programs with the Standards. Following sections summarize the compliance procedure with computer methods.

Part 5.4 of this Chapter describes computer input values and proposed design modeling techniques. Guidelines for special modeling cases such as zonal controls, controlled ventilation crawl spaces and sunspaces are also contained in Part 5.4. (Input descriptions relating to water heating calculations are contained in Chapter 5.) Part 5.5 outlines standardized computer method compliance reports using the public domain program (CALRES2) printout as illustration. The final section summarizes the computer assumptions that are used to generate the annual energy budget. Part 5.6 describes how the energy budget is determined.

The compliance supplement of each approved computer method provides important information regarding the use of that program for showing compliance with the Standards.

CHAPTER OVERVIEW:

Part	Topic	Page
5.1	**Introduction**	**5-2**
	Approval of Computer Methods	5-2
5.2	**Compliance with a Computer Method**	**5-3**
	Combined Energy Budget	5-3
	Compliance Demonstration	5-4
	Additions	5-4
5.3	**General Compliance Procedures**	**5-4**
	Professional Judgment	5-5
5.4	**Proposed Design Modeling**	**5-6**
	A. Building Information	5-7
	B. Walls, Doors, Roofs/ Ceilings & Floors	5-9
	C. Fenestration	5-16
	D. Shading	5-18
	E. Thermal Mass	5-20
	F. Infiltration/Ventilation	5-22
	G. Internal Gain/Thermostat	5-24
	H. Space Conditioning	5-25
	I. Duct Efficiency	5-26
	J. Water Heating	5-26
	K. Unconditioned Space	5-26
	L. Controlled Ventilation Crawl Space (CVC)	5-29
	M. Zonal Control	5-30
	N. Radiant Barriers	5-32
	O. Solar and Wood Stove Boiler Water Heating	5-33
	P. Combined Hydronic Space/Water Heating	5-33
	Q. Dedicated Hydronic	5-34
	R. Building Additions	5-34
	S. Solar Water/Space Heating	5-35
5.5	**Computer Method Documentation**	**5-35**
5.6	**Standard Design Assumptions**	**5-36**

Applicable sections of the California Code of Regulations, Title 24, Part 1: 10-108, 10-109, 10-110; Part 6: 151.

5.1 INTRODUCTION

Computer methods are computer programs approved by the California Energy Commission as being capable of calculating space conditioning and water heating energy use. The methods *simulate* or *model* the thermal behavior of buildings by calculating heat flows into and out of the various thermal zones of the building. The Warren-Alquist Act calls for the establishment of "performance standards" which predict and compare energy use of buildings. Because of their relative accuracy in analyzing annual space conditioning and water heating energy use of different building conservation features, levels and techniques, computer methods are the basis of performance standards.

A computer method can perform a significant number of calculations to project the interactive thermal effects of many different building components in conjunction with specific outdoor weather conditions. The calculations include:

- Heat gain and heat loss through walls, roof/ceilings, floors, fenestration and doors
- Solar gain through fenestration as affected by orientation, fixed shading or operable shading devices
- Natural ventilation by operable windows and infiltration through cracks and porous surfaces in the building envelope
- Heat storage effects of different types of thermal mass in buildings with large amounts of mass (e.g., passive solar buildings)
- Efficiencies of mechanical heating and cooling equipment and duct systems

The prescriptive packages (Chapter 3) were derived by the Commission from the results of building energy analysis studies using the Commission's reference computer method.

Computer methods are generally the most detailed and flexible compliance path. The energy performance of a proposed building design can be calculated according to actual building geometry and site placement. Credit for certain conservation features, such as improved duct efficiency or reduced building envelope leakage, cannot be taken in the prescriptive packages, but can be evaluated with an approved computer method.

NOTE:

Use of a computer method may require special documentation associated with particular features such as radiant barriers or high thermal mass levels. See Part 5.5 for required documentation. Similarly, compliance credit for features, such as improved duct efficiency or reduced building envelope air leakage, that require diagnostic testing and field verification also require special documentation and processing. See Section 4.3 for diagnostic testing and field verification requirements.

Approval of Computer Methods

For any computer method to be used for compliance with the Standards, the method must first be *approved* by the Commission. Approval involves the demonstration of minimum modeling capabilities and program documentation. The program must be able to:

- Automatically calculate the ***energy budget*** based upon the ***standard design*** (see Part 5.2)
- Calculate the energy use of the proposed design in accordance with specific fixed and restricted inputs
- Perform basic water heating calculations (see Chapter 6)
- Print the appropriate standardized compliance reports (Part 5.5).

Modeling capabilities are tested by using the program to calculate the energy use of certain prototype buildings under specific conditions. The results are then compared with the results from the Commission's reference computer method.

The Commission approves the alternative calculation method according to the procedures outlined in Title 24, Part 1, Sections 10-108 through 10-110. The procedures are detailed

in the *Residential Alternative Calculation Methods Approval Manual.*

The Commission periodically updates a listing of approved computer programs. This list may be obtained from the Commission's Publications Office or by calling the Energy Hotline at (800) 772-3300, and can be inserted into this manual as Appendix F.

5.2 COMPLIANCE WITH A COMPUTER METHOD

Energy Code

Combined Energy Budget (Section 151(b)

Performance Standards*. A building complies with the performance standard if its combined calculated depletable energy use for water heating (Section 151(b)1.) and space conditioning (Section 151(b)2.) is less than or equal to the combined maximum allowable energy use for both water heating and space conditioning, even if the building fails to meet either the water heating or space conditioning budget alone.*

1. *Water heating budgets. The budgets for water heating systems are those calculated from Equation No. 1-N [see Chapter 6].*

2. *Space conditioning budgets. The space conditioning budgets for each climate zone shall be the calculated consumption of energy from depletable sources required for space conditioning in buildings in which the basic requirements of Section 151(a) and the measures in alternative component package D are installed. To determine the space conditioning budget, use an approved calculation method.*

Space Compliance/ Plan Check

Combined Energy Budget:

Conditioning and Water Heating Energy Use

Each approved computer method automatically generates an ***energy budget*** by calculating the annual energy use of the ***standard design***, a version of the proposed building incorporating all the conservation features of prescriptive Package D (see Chapter 3). There are two basic components to the energy budget: space conditioning and water heating. Space conditioning is further divided into space heating and space cooling.

A building complies with the Standards if the predicted source ***energy use*** of the ***proposed design*** is the same or less than the combined annual energy budget for space conditioning and water heating of the standard design. As explained in Chapter 6, the energy budget for water heating energy use varies for each dwelling unit depending on the total conditioned floor area. The budget for space heating and cooling varies according to specific characteristics of the proposed building design.

Since the energy budget for the standard design is derived by assuming equal distribution of fenestration area in all four cardinal orientations, the energy budget remains the same regardless of how the actual building is oriented. Variables which affect the energy budget are:

- Conditioned floor area
- Conditioned volume
- Gross roof/ceiling area
- Gross wall area
- Slab edge length
- Conditioned Slab-on-grade area
- Raised floor area over crawl space
- Raised floor area over open space
- Heating system type: Gas or electric
- Cooling system type: Split or single package
- Space conditioning distribution system type
- Climate zone

All other building-related inputs such as area and type of fenestration products, ventilation, HVAC efficiencies and duct efficiencies are automatically fixed in the standard design building according to the Package D requirements and are not accessible for modification by program users.

ENERGY SUMMARY (kBtu/ft^2-yr)		
	Standard Design Energy Budget	Proposed Design Energy Use
Space Heating	12.34	12.63
Space Cooling	8.97	7.12
Water Heating	11.76	11.76
Total	33.07	31.51

Figure 5-1: CALRES2 Example Energy Use Summary on C-2R (Page 1)

Assumptions used by the computer methods in generating the energy budget are summarized in Part 5.6.

The energy budget and energy use for a building is summarized in an ***Energy Summary*** on the Computer Method Summary (C-2R) form illustrated in Part 5.5 and Figure 5-1. The ***Standard Design Energy Budget*** is calculated according to the rules and assumptions explained in Part 5.6, and represents the total allowable energy budget for the building.

The *Proposed Design Energy Use* must be equal to or less than that of the Standard Design Energy Budget for the building to comply.

Energy Code

Compliance Demonstration (Section 151(c))

Compliance Demonstration Requirements for Performance Standards*. The application for a building permit shall include documentation which demonstrates, using an approved calculation method, that the new building has been designed so that its energy use from depletable energy sources does not exceed the combined water heating and space conditioning energy budgets for the appropriate climate zone.*

Compliance/ Plan Check

Compliance Demonstration

Although any one or two components of the energy use may be higher than the same component in the energy budget (e.g., 12.63 kBtu/ft^2-yr versus 12.34 kBtu/ft^2-yr space heating), the *combined* energy use of the Proposed Design must be less than or equal to the *combined* energy budget of the Standard Design (e.g., 31.51 versus 33.07 kBtu/ft^2-yr). In this way, trade-offs can be made among water heating, space heating and space cooling energy use (see Section 151(b) of the Standards).

Additions

An approved computer method may be used to show compliance of an addition alone, or be used to show compliance of an addition accounting for the energy performance of the existing building. These approaches are explained in Chapter 7, Parts 7.2 and 7.3.

5.3 GENERAL COMPLIANCE PROCEDURE

Any approved computer method may be used to comply with the Standards. The following steps are a general outline of the typical computer method procedure:

1. Collect all necessary data—areas of fenestration products, walls, doors, roofs, ceilings and floors, construction assemblies, solar heat gain coefficients, equipment efficiencies, water heating information—from drawings and specifications. Although most computer methods require the same basic data, some information, and the manner in which it is organized, may vary according to the particular program used. *Refer to the compliance supplement for the program being used for additional details*.

2. If appropriate default U-values for wall, roof/ceiling and floor are used (see Part 5.4, item B5), no special documentation is submitted. If default values are not used, prepare the appropriate Forms 3R for the various proposed construction assemblies either through the use of the program or by hand calculation (see *R-Value in the Glossary)*.

3. Prepare an input file describing the other thermal aspects of the proposed design according to the rules described in Part 5.4 and in the program's compliance supplement.

   Input values and assumptions must correctly correspond to the proposed design and conform to the required mandatory measures described in Chapter 2.

4. Generate a computer run to automatically calculate the Standard Design Energy Budget and the Proposed Design Energy Use.

5a. If the water heating system is a "standard system" as explained in Chapter 6, the water heating energy use is assumed to be the same for both the standard and proposed designs.

5b. If any other water heating system is to be used or if credit is being taken for a more conserving aspect of the water heating system, water heating energy use must be calculated as explained in Chapter 6. The computer printout must show the details of the water heating system that was modeled.

The building complies if the total energy use of the proposed design is the same or less than the standard design energy budget.

Professional Judgment

As explained in the next section, some modeling techniques and compliance assumptions applied to the proposed design are fixed or restricted. There is little or no freedom to choose input values for compliance modeling purposes. However, other aspects of computer modeling remain for which some professional judgment is necessary. In those instances, exercise proper judgment in evaluating whether a given assumption is appropriate.

Building departments have full discretion to reject a particular input, especially if the user has not substantiated the value with supporting documentation.

Two questions may be asked in order to resolve whether professional judgment has been applied correctly in any particular case:

- Is a simplifying assumption appropriate for a specific case?

- *If simplification reduces the predicted energy use of the proposed building when compared to a more explicit and detailed modeling assumption, the simplification is not acceptable* (i.e., the simplification must reflect higher energy use than a more detailed modeling assumption).

- Is the approach or assumption used in modeling the proposed design consistent with the approach or assumption used in generating the energy budget?

- *One must always model the proposed design using the same assumption and/or technique used by the program in calculating the energy budget unless drawings and specifications indicate specific differences that warrant conservation credits or penalties.*

Any unusual modeling approach, assumption or input value should be documented with published data and should conform to standard engineering practice.

For assistance in evaluating the appropriateness of particular input assumptions, call the Energy Hotline (see Chapter 1, Part 1.6) or call the vendor of the computer program (see Appendix F).

NOTE:

When creating any computer input file, use the space provided for the project title information to concisely and uniquely describe the building being modeled. User-designated names should be clear and internally consistent with other orientations and/or buildings being analyzed. Title names and explanatory comments should assist individuals involved in both the compliance and enforcement process.

5.4 PROPOSED DESIGN MODELING PROCEDURE

This section summarizes the modeling and output information used in demonstrating compliance with approved computer methods. *Program users and those checking for enforcement should consult the most current version of the user's manuals and associated compliance supplements for specific instructions on the operation of the program.*

Input data entered into each approved computer method may be organized differently from one to the next. As a result, it is not possible in this summary to present all variables in their correct order or hierarchy for any one program. The aim is to identify a generic type of input variable and explain how it should be treated in the context of properly modeling the proposed building design for compliance. Descriptions of particular values are cross-referenced to key outputs shown on the sample Computer Method Summary (C-2R) forms in Part 5.5. Modeling assumptions used by the computer methods to calculate the standard energy budget are outlined in Part 5.6.

The following general reference categories may be used to find specific input/output descriptions which are grouped accordingly:

MINIMUM CAPABILITIES

A. Building Information
B. Walls, Doors, Roofs/Ceilings and Floors
C. Fenestration
D. Shading Devices and Overhangs
E. Thermal Mass
F. Natural Ventilation
G. Mechanical Ventilation
H. Infiltration Gains and Losses and Reduced Building Envelope Air Leakage
I. Internal Gain & Thermostat Setpoints
J. Space Conditioning System Efficiency and Distribution (Duct) System Efficiency
K. Water Heating Efficiency and Distribution System
L. Radiant Barrier
M. Building Additions Modeled with or without Existing Buildings

OPTIONAL CAPABILITIES

N. Controlled Ventilation Crawl Space (CVC)
O. Zonal Control
P. Attached Sunspaces
Q. Combined Hydronic Space/Water Heating
R. Exterior Mass Walls
S. Solar Water Heating
T. Side Fin Shading
U. Gas-Fired Heat Pumps
V. Form 3 Report Generator

Computer Input	Proposed Design Modeling Procedure

A. Building Information

Project Title Information A1

The project title should be used to clearly identify and distinguish one project, building, unit plan and/or orientation from another. The general rule is to include as much title description as is useful.

Number of Dwelling Units A2

The number of dwelling units determines the value used for internal heat gain and the water heating energy budget in multi-family buildings.

When modeling an addition, consider the dwelling unit number as the fraction obtained by dividing the square foot area of the addition by the square foot area of the existing building plus addition.

Number of Stories A3

The number of habitable stories in the proposed design. A habitable story is defined as a story that contains space in which humans may work or live in reasonable comfort, and that has at least 50 percent of its volume above grade.

In the case of a second story addition modeled alone, the number of habitable stories in the proposed design should be input as "2".

Building Type A4

Building types are: Single Family (includes duplexes and halfplexes), Multi-Family (includes all other attached dwellings including condominiums), Addition, Existing-Plus-Addition or Alteration. The building type identifies for the computer programs which of the different modeling algorithms for internal heat gain and infiltration are used for the calculation of a particular energy budget (see Chapter 7, Part 7.2).

Front Orientation A5

This is a value that represents the rotation of the reference "Front" side or reference "Front" elevation of the building with respect to true north, expressed in degrees (see Figure 5-2). When compliance is demonstrated for all orientations, the reference orientation can be reported as North.

TRUE NORTH =	0	= True North
	90	= True East
	180	= True South
	270	= True West

NOTE:

The "front" or "entry" door of the building may not necessarily be located in the wall designated in the drawings as the "Front" elevation.

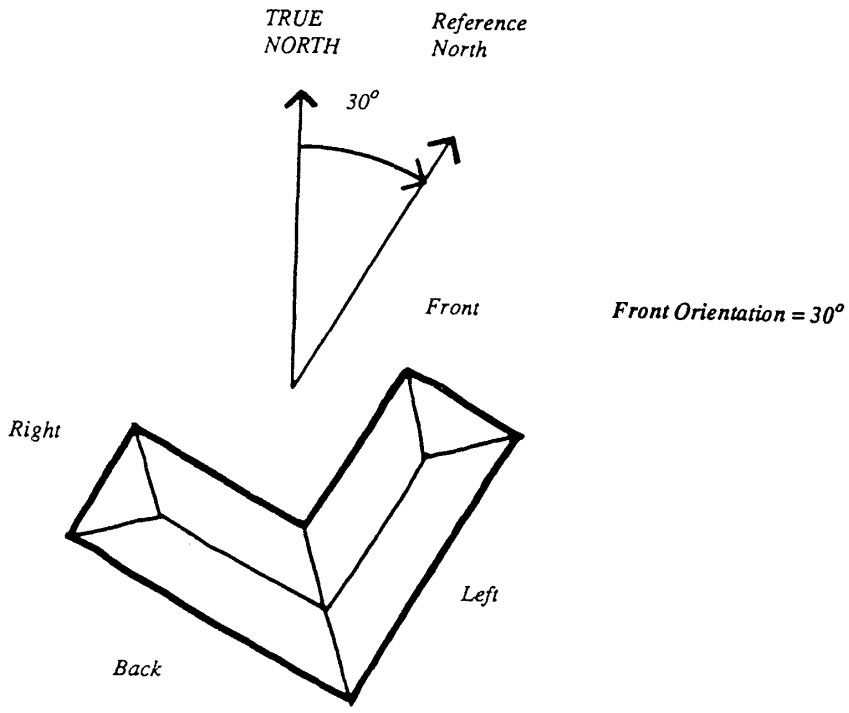

Figure 5-2: Front Orientation with respect to True North

Computer Input	Proposed Design Modeling Procedure
Total Conditioned Floor Area A6	Total conditioned floor area of the building, in square feet. See the *Glossary* for a full definition.
Conditioned Slab Floor Area	The conditioned slab area is the area of slab floor with conditioned space above and the ground (slab-on-grade) or unconditioned space below (raised slab). This input and the *Total Conditioned Floor Area* are used to determine the thermal mass modeled in the Proposed Design and the Standard Design.
Volume A7	Volume of all conditioned space, in cubic feet. This value is the product of total conditioned floor area and area-weighted average ceiling height.
Climate Zone A8	The climate zone identified allows the program to use the fixed weather data established by the Commission. Depending on the program, the city specified may automatically call the correct climate zone. Consult the Appendix D or the program compliance supplement.

Computer Input	Proposed Design Modeling Procedure
B	**Walls, Doors, Roofs/Ceilings & Floors**
Exterior Walls, Doors, Roofs/Ceilings and Raised Floors B1	Exterior surfaces are defined as surfaces which separate conditioned space from outdoor conditions or unconditioned spaces. See Unconditioned Space, Controlled Ventilation Crawl Space and the program compliance supplement for further information. Each exterior surface has associated with it a user-defined name (which may not appear on compliance output), area, U-value, orientation, tilt and absorptivity as described below. The mass effect of exterior masonry walls may be modeled by computer methods with that optional capability. In those cases, exterior wall inputs include thermal mass attributes described in Subpart 5.4E and in the program compliance supplement. Straw bales that are 23 inches by 16 inches are assumed to have a thermal resistance of R-30. (Performance data on other sizes of bales was not available at the time of publication of this manual.) The minimum density of load bearing walls is 7.0 pounds per cubic foot, or the actual density. Specific heat is set to 0.32 Btu/lb/°F. Volumetric heat capacity is calculated as density times specific heat (at 7 lb/ft^3 the volumetric heat capacity is 2.24 $Btu/ft^3/°F$.
Name B2	A user-defined name should be used to clearly distinguish one wall or ceiling from another. When a building is to be run for compliance in all four orientations, "front" and "rear" designations are recommended instead of "north" and "south" (see *Front* and *Back* in the *Glossary*). Note: user-defined names may be used and appear on input screens but the ACM must generate names such as WALL01 for compliance output

Computer Input	Proposed Design Modeling Procedure
Area B3	Net area of the exterior wall, basement wall/floor, roof/ceiling or raised floor, in square feet. The net area does not include the area of fenestration products and doors which are treated separately. Some programs may have the user enter a gross exterior wall area and automatically subtract the area of fenestration and doors. Consult the program compliance supplement. Exterior wall area is measured from the lowest finished habitable floor to the ceiling of the uppermost floor. Basement walls include below grade walls at depths of 2 feet, 2 to 6 feet, and greater than 6 feet. Above grade walls are modeled as conventional walls. Floor and ceiling areas include the thickness of exterior walls. Vaulted roof/ceiling areas must be calculated for the surfaces through which heat loss occurs (e.g., insulation in a flat ceiling area or in a sloped roof area). Skylight area is subtracted in computing net roof/ceiling areas.
Ground Floor Area B4	The conditioned ground floor area is defined as the conditioned slab-on-grade area of slab on grade building and the conditioned footprint area of a raised floor building.
U-Value B5	The U-value of the construction assembly, in Btu/(ft^2-hr-°F) (see the *Glossary*). Standard U-values shown in Table 5-1 may be used instead of completing and submitting a Form 3R. If a Form 3R is calculated (see *R-Value* in the *Glossary*), the "Total U-Value" from the bottom of the form is input. Ceiling U-values may be reduced by the ACM if radiant barriers are installed which meet certain installation criteria. See Subpart 5.4N for details. **NOTE**: In the case where metal framing is used the overall U-value of the assembly cannot be determined by using the Form 3R. To properly account for the high thermal conductivity of metal, the tables and methodology included in the Appendices for metal framing must be used to calculate a correct value. Also, values from Table G-16 may be used.

Computer Input	Proposed Design Modeling Procedure
Orientation B6	This is an input value representing the orientation of the exterior surface with respect to the reference "front" elevation. For example, the "left" elevation is 90°, the "rear" elevation is 180°, the "right" elevation is 270°, and the "front" elevation is zero degrees for a typical building. **NOTE:** The C-2R printout shows *actual orientation* of each opaque and fenestration surface *based on the rotation specified for Front Orientation*
Tilt B7	The tilt of the exterior surface is defined to be 0° for a horizontal (face up) roof/ceiling, 90° for a vertical wall and 180° for a floor (face down).
Solar Gains B8	Solar gains is either "Yes" for all exterior surfaces exposed to any direct sunlight or "No" for surfaces which do not receive direct solar gain (e.g., a wall separating conditioned space and a garage).

Table 4-1a: Standard U-Values of Wood Frame Roofs/Ceilings and Walls[1]

Roof/Ceiling Insulation	Framing Spacing	Reference[2] Name	U-Value
R-0[3]	16" o.c.	R.0.2X6.16	0.298
R-0[3]	24" o.c.	R.0.2X4.24	0.306
R-11[3]	16" o.c.	R.11.2X6.16	0.077
R-11[3]	24" o.c.	R.11.2X4.24	0.077
R-13[3]	16" o.c.	R.13.2X6.16	0.069
R-13[3]	24" o.c.	R.13.2X4.24	0.069
R-19	16" o.c.	R.19.2X8.16	0.051
R-19	24" o.c.	R.19.2X4.24	0.047
R-22	16" o.c.	R.22.2X10.16	0.0454
R-22	24" o.c.	R.22.2X4.24	0.041
R-30	16" o.c.	R.30.2X10.16	0.036
R-30	16" o.c.	R.30.2X12.16	0.034
R-30	24" o.c.	R.30.2X4.24	0.031
R-38	16" o.c.	R.38.2X12.16	0.030
R-38	16" o.c.	R.38.2X14.16	0.028
R-38	24" o.c.	R.38.2X14.24	0.025
R-49	16" o.c.	R.49.2X4.16	0.019
R-49	24" o.c.	R.49.2X4.24	0.019
Wall Insulation			
R-0[3]	16" o.c.	W.0.2X4.16	0.385
R-0[3]	24" o.c.	W.0.2X4.24	0.393
R-7[3]	16" o.c.	W.7.2X4.16	0.130
R-7[3]	24" o.c.	W.7.2X4.24	0.127
R-11[3]	16" o.c.	W.11.2X4.16	0.098
R-11[3]	24" o.c.	W.11.2X4.24	0.094
R-13	16" o.c.	W.13.2X4.16	0.088
R-13	24" o.c.	W.13.2X4.24	0.085
R-15	16" o.c.	W.15.2X4.16	0.081
R-15	24" o.c.	W.15.2X4.24	0.077
R-19	16" o.c.	W.19.2X6.16	0.065
R-19	24" o.c.	W.19.2X6.24	0.063
R-21	16" o.c.	W.21.2X6.16	0.059
R-21	24" o.c.	W.21.2X6.24	0.056
R-25	16" o.c.	W.25.2X6.16	0.046
R-29	16" o.c.	W.29.2X4.16	0.035
Solid core wood door (no insulation)		D.0.SCW	0.330

1. Based on ASHRAE Parallel heat Flow Calculation, ASHRAE Handbook of Fundamentals.
2. These Reference Names are taken from Appendix H.
3. Does not meet the minimum level required as a mandatory measure (see Chapter 2, Part 2.2).
4. Roof/ceiling assemblies whose reference names list 2x4 framing include an attic space.

Table 5-1b: Standard U-Values of Wood Frame Raised Floors[1]

Floor Insulation	Condition	Reference[2] Name	U-Value
R-0[3]	No crawl space	FX.0.2X6.16	0.241
R-0[3]	Crawl space	FC.0.2X6.16	0.097
R-11[3]	No crawl space	FX.11.2X6.16	0.071
R-11[3]	Crawl space	FC.11.2X6.16	0.050
R-13	No crawl space	FX.13.2X6.16	0.064
R-13	Crawl space	FC.13.2X6.16	0.046
R-19	No crawl space	FX.19.2X8.16	0.049
R-19	Crawl space	FC.19.2X8.16	0.037
R-21	No crawl space	FX.21.2X8.16	0.045
R-21	Crawl space	FC.21.2X8.16	0.035
R-30	No crawl space	FX.30.2X10.16	0.034
R-30	Crawl space	FC.30.2X10.16	0.028

1. Based on ASHRAE Parallel heat Flow Calculation, ASHRAE Handbook of Fundamentals.
2. The Names given to the standard assemblies used to calculate these U-values in Appendix H.
3. Does not meet the minimum level required as a mandatory measure (see Chapter 2, Part 2.2).

Table 5-1c: Standard U-Values of Wood Foam Panel Roofs/Ceilings and Walls[1]

Roof/Ceiling Insulation	Framing Spacing	Reference[2] Name	U-Value
R-14[3]	48" o.c.	RP.14.2X4.48	0.058
R-22	48" o.c.	RP.22.2X6.48	0.041
R-28	48" o.c.	RP.28.2X8.48	0.033
R-36	48" o.c.	RP.35.2X10.48	0.027
Wall Insulation			
R-14	48" o.c.	WP.14.2X4.48	0.062
R-22	48" o.c.	WP.22.2X6.48	0.044

1. Based on ASHRAE Parallel heat Flow Calculation, ASHRAE Handbook of Fundamentals.
2. The names given to the standard assemblies used to calculate these U-values in Appendix H.
3. Does not meet the minimum level required as a mandatory measure (see Chapter 2, Part 2.2).

Computer Input	Proposed Design Modeling Procedure
Slab-On-Grade B9	Slab floors coupled directly to the ground (i.e., poured directly on grade) fall into this category. Post-tensioned slabs suspended over a garage, for example, are treated as exterior (raised) floors but are included as part of the *Conditioned Slab Floor Area*. Thermal mass characteristics of slab floors are explained in Subpart 5.4E.
Slab Area B10	The gross area of slab-on-grade, in square feet. This value is needed for the program to calculate the net area of covered slab and the conditioned footprint area of the building.
Slab Edge Length B11	The length of slab edge through which there is heat loss, in feet. The slab edge length is fixed to assume 80 percent is carpeted or covered and 20 percent is exposed to conditioned air. Slab heat transfer is modeled through the slab edge. The heat flow is a function of the surface treatment of the slab, and the R-value and depth of any edge insulation (B12).
Slab Edge Insulation Depth and R-Value or F-2 Factor B12	The F2 factor defines the slab loss per linear foot of slab edge. The user specifies the insulation depth and R-value and the program calculates the F2 factor. Any portion of a slab edge located between conditioned space and an attached and enclosed conditioned space (e.g., a garage or crawl space) may be modeled as if R-7 insulation is installed to a depth of 16". In climate zones 1 and 16 only, slab edges adjacent to an entry slab may also be calculated as if R-7 insulation is installed to a depth of 16". The perimeter length of bermed (under ground) walls is modeled as slab edge. **NOTE:** In a building with a hydronic radiant slab floor heating system (see Chapter 8, Part 8.9), the required R-10 slab edge insulation must be installed. However, the slab must be modeled without credit for slab edge insulation (i.e., R-0 for Climate Zones 1-15 and R-7 for Climate Zone 16) for compliance purposes.

Table 5-1d: Standard U-Values of Steel Frame Walls[1]

Wall Insulation	Insulation Sheathing R-Value	Framing Type	Framing Spacing	U-Value[3]
R-11[3]	0	2x4	16" o.c.	0.202
R-11	7	2x4	16" o.c.	0.084
R-11[3]	0	2x4	24" o.c.	0.173
R-11	7	2x4	24" o.c.	0.078
R-13[3]	0	2x4	16" o.c.	0.195
R-13	7	2x4	16" o.c.	0.082
R-13[3]	0	2x4	24" o.c.	0.165
R-13	7	2x4	24" o.c.	0.077
R-15[3]	0	2x4	16" o.c.	0.189
R-15	7	2x4	16" o.c.	0.077
R-15[3]	0	2x4	24" o.c.	0.158
R-15	5	2x4	24" o.c.	0.088
R-19[3]	0	2x6	16" o.c.	0.162
R-19	7	2x6	16" o.c.	0.075
R-19[3]	0	2x6	24" o.c.	0.135
R-19	4	2x6	24" o.c.	0.088
R-21[3]	0	2x6	16" o.c.	0.157
R-21	5	2x6	16" o.c.	0.088
R-21[3]	0	2x6	24" o.c.	0.130
R-21	4	2x6	24" o.c.	0.086
R-22[3]	0	2x6	16" o.c.	0.158
R-22	5	2x6	16" o.c.	0.088
R-22[3]	0	2x6	24" o.c.	0.132
R-22	4	2x6	24" o.c.	0.086

1. Based on ASHRAE Parallel heat Flow Calculation, ASHRAE Handbook of Fundamentals.
2. The U-value must be no greater than 0.088 to comply. See also Appendix I, Table I-1.
3. Does not meet the minimum level required as a mandatory measure (see Chapter 2, Part 2.2).

Computer Input	Proposed Design Modeling Procedure

C. Fenestration

Fenestration C1

Fenestration products include all windows, skylights and exterior doors with glazing (see Chapter 2, Part 2.3 and the *Glossary*.) All fenestration must be modeled if it separates conditioned space from the outside or conditioned space from unconditioned space. In some special cases, fenestration is not modeled as exterior surface (e.g., in the case of a controlled ventilated crawl space or an unheated sunspace) as explained in the program compliance supplement. See *Unconditioned Space* later in this section and the program compliance supplements.

Fenestration Name C2

The user-defined name should be used to indicate the type of fenestration product and associated shading.

When a building is to be run in all four orientations, "front" and "back" designations should be used instead of "north" and "south" (see *Front* in the *Glossary*).

Area C3

The sash or frame opening area of the fenestration product, in square feet (see Glossary). The area calculated from the nominal or rough opening dimensions is generally acceptable. The full area of French doors must be included, as well as the rough opening of greenhouse/garden windows.

A greenhouse/garden window is a window that projects from the building but does not extend to the ground and is not intended for use as a habitable space (e.g., used for shelves).

U-Value C4

The rated U-value of the fenestration product, in Btu/hr-ft^2-°F. This is the U-value which the manufacturers display as a label on all windows and skylights. See Chapter 2, Part 2.3 for a discussion of window, glass door and skylight ratings.

Computer Input	Proposed Design Modeling Procedure

Orientation C6

The orientation of the glazing surface with respect to the "front orientation" (see Figure 5-2).

The "left" elevation is 90°, "back" elevation is 180°, right elevation is 270°, and "front" elevation is 0° for a typical building. See A5, *Front Orientation*, and B6, *Wall Orientation,* in this section.

NOTE:

The C-2R printout shows *actual orientation* of each opaque and glazing surface *including the rotation specified for Front Orientation.*

Tilt C7

The tilt of the fenestration is defined to be 0° for a horizontal skylight and 90° for a vertical window or clerestory. The actual tilt of the fenestration should be entered (e.g., 18° for a skylight in a 4:12 roof pitch).

Operable Window Type C8

Acceptable opening types are Slider, Hinged (casement, French door, awning or hopper), or Fixed (picture window). The default for windows is Slider. To determine the standard design, the assumption is that all fenestration openings are operable slider type.

The area of operable fenestration is important in the natural ventilation effectiveness calculated by the program.

When credit for hinged operable fenestration is taken, all fixed fenestration areas must also be accounted for as part of the calculation of total vent area:

$$\mathbf{Vent}_{area} = (\mathbf{Area}_{slider} \times 0.1) + (\mathbf{Area}_{hinged} \times 0.2) + (\mathbf{Area}_{fixed} \times 0.0$$

When the area of hinged windows are entered, the area of sliders must also be entered and the area of fixed windows must equal the difference between the total fenestration area and the sum of the areas of the sliders and hinged fenestration or a program error will result.

Free vent area is divided up into 50 percent of the total free vent area as inlet area and 50 percent of the free vent area as outlet area. Although this calculation is done automatically within the program, the equation is needed to area-weight height differences between inlet and outlet vents as explained in F2.

Computer Input	Proposed Design Modeling Procedure

D. Shading

Shading Characteristics D1

Shading can be defined as a fixed overhang and/or side fins relating to a particular glass area; as a fixed exterior screen or shade with a specified solar heat gain coefficient; or as an interior movable device with an overall glass/shade solar heat gain coefficient. For a full explanation of *Shading*, see the *Glossary* and consult the program compliance supplement.

SHGC Fenestration D2

This SHGC for the fenestration product which includes the shading effects of framing and dividers is obtained from manufacturer's literature, product label, or from Table G-7 (see *Solar Heat Gain Coefficient* in the *Glossary*).

Interior Shade D3

The SHGC for interior devices is determined based on the following descriptions:

Descriptor	Interior Shading Device
Standard	Draperies, Translucent Roller Shades, or No Special Interior Shading - Default Interior Shade
Blinds	Venetian Blind, Vertical Blind, MiniBlind)
OpRollShd	Opaque Roller Shades Only

No other interior shading devices or attachments are allowed credit for compliance with the building efficiency standards. That is, no custom shading devices are allowed to be used for compliance.

When compliance credit is claimed for any interior shading device other than "Standard," that device must be installed and present at final inspection.

A drapery is modeled when "Standard" or no special interior shading is specified for a window. If the output specifies *Standard*, it will note that a drapery is modeled, but it is not required to be installed and present at final inspection.

The default interior shading device for skylights is *None* and skylights (glazing tilted less than 60 degrees) are the only fenestration surfaces allowed to use *None* for the interior shading device.

Computer Input	Proposed Design Modeling Procedure
Exterior Shade D4	Credit for exterior devices is determined from the description of the exterior shading device: Descriptor — Exterior Shading Device Standard — Bug Screen WvnScrn — Woven SunScreen LvrScrn — Louvered SunScreen LSASnScrn — Low Sun Angle (LSA) Sunscreen RlDwnAwng — Roll-down Awning RlDwnBlnds — Roll -down Blinds or Slats None — None (Skylights Only) Note that None is only allowed for skylights and is the default exterior shade for skylights.
Height of Shaded Fenestration D5	Height of fenestration to be shaded, in feet. In most programs, fenestration height is used only to establish the geometry of the shading condition for overhangs and fins, not to compute fenestration area (which is entered elsewhere.) For a particular overhang, the area-weighted average height may be used if combining different windows is judged appropriate according to Part 5.2 of this chapter.
Width of Shaded Fenestration D6	Width of fenestration to be shaded, in feet. Fenestration width is used generally to establish the geometry of the shading condition for overhangs and fins, not to compute fenestration area (which is input elsewhere). An average fenestration width may be used if combining different windows is judged appropriate according to Part 5.2 of this chapter.
Overhangs D7	Dimensions which describe an overhang above the fenestration, in feet: Depth of the overhang, vertical distance from the top of the fenestration to the overhang, extension of the overhang at the sides, height of the overhang flap (depending on the program). Consult the program compliance supplement for further information.

Computer Input	Proposed Design Modeling Procedure
Fins D8	Dimensions which describe side fins to the left and/or right of the fenestration, in feet: Depth of fins, extension of fins above the fenestration, distance from the fins to the fenestration and the extension of fenestration below the fins (depending upon the program). Consult the program compliance supplement for further information.
Substantially Shaded Fenestration D9	Substantially shaded fenestration may be modeled with an exterior solar heat gain coefficient of 0.20. For more details on the requirements that must be met, refer to *Solar Heat Gain Coefficient* in the *Glossary*.

E. Thermal Mass

In the 1998 standards, thermal mass was removed as a requirement for the Prescriptive Package that is the basis for the Standard Design used to determine the energy budget for the performance approach. Thermal mass credit is now restricted to buildings designed to take advantage of thermal mass such as passive solar designs. For typical buildings there is no credit for thermal mass because thermal mass is modeled the same for both the Proposed Design and the Standard Design. Thermal mass receives credit only when the amount of mass in the Proposed Design exceeds a high mass threshold.
Refer to the program compliance supplement to learn more about specific thermal mass modeling techniques and optional capabilities.

Mass Material Name E1	A user-defined name for a thermal mass material not already included as part of the program's materials library.
Surface Area E2	Surface area of the thermal mass, in square feet. If both surfaces of an interior mass wall are exposed to conditioned space, use half the thickness of the wall and the total area of both wall surfaces. Both surfaces are coupled to zones called "House" (see E8). The surface area of covered slab-on-grade is the calculated exposed slab area subtracted from the total gross slab area.

Computer Input	Proposed Design Modeling Procedure
Thickness E4	Thickness of the thermal mass, in inches. If both surfaces of a solid interior mass wall such as grouted concrete block are directly exposed to conditioned air, the full thickness of the wall should be assigned to the mass element which is then coupled to two "House" zones as explained in E3 and E8.
Volumetric Heat Capacity E5	Heat capacity of one cubic foot of the material, in Btu/ft^{3}°F. Consult the compliance supplement for the specific program being used to select the appropriate value for a generic mass material listed in Table G-13.
Conductivity E6	Thermal conductivity of the mass material, in Btu/hr-ft^{2}-°F. Consult the compliance supplement for the specific program being used to select the appropriate value for a generic mass material.
Surface Resistance E7	Heat transfer at the surface of the mass is expressed as thermal resistance, in hr-ft^{2}-°F/Btu. This value is used to account for a treatment such as carpet which, like any "covered" surface, is assumed to have a surface resistance of R-2.0. In modeling a slab-on-grade building, all mass area that is not exposed is assumed to be covered.
Mass Coupling E8	The coupling of the thermal mass defines which building zone (e.g., "house") or temperature condition the mass surface is connected to. Each side of the mass is coupled either to a conditioned space, an unconditioned space or the ambient (outdoor) conditions. Thermal mass is considered "interior" if all of its surface area, such as both sides of a masonry partition are exposed to the conditioned space. Thermal mass coupled to conditioned space on one side and exposed to outdoor conditions on the other side is "exterior" mass. The CF-1R and C-2R forms (see Part 5.5 and Appendix A) make clear which type of mass is included in the proposed design.

Computer Input	Proposed Design Modeling Procedure
F.	**Infiltration/Ventilation and Reduced Building Envelope Air Leakage**
	Approved computer programs use a default building envelope air leakage (expressed in terms of Specific Leakage Area, SLA) for proposed designs when the user does not intend to take compliance credit for building envelope sealing. The default is set at 4.9 SLA except for dwellings using non-ducted HVAC systems where the default SLA is 3.8 for both the Proposed and Standard Designs. Careful attention to building envelope sealing would result in significantly lower SLA levels which may be modeled subject to verification by a HERS rater.
Reduced Building Envelope Air Leakage through Diagnostic Testing F1	Compliance credit can be taken for reduced building envelope leakage verified through diagnostic blowerdoor testing as described in Chapter 4. There are special mechanical ventilation requirements when the building is designed for low building envelope leakage and mechanical **supply** ventilation requirements when diagnostic testing indicates that the building is "unusually tight." These are described in Chapter 4.
Mechanical Ventilation Wattage of Ventilation Supply and Exhaust Fans F3	The total power consumption of the continuous supply ventilation fans and continuous exhaust fans are input when compliance credit is taken for reduced building envelope leakage and mechanical ventilation is installed.
Mechanical Ventilation cfm of Ventilation Supply and Exhaust Fans F4	The volumetric capacity of continuous supply fans and continuous exhaust fans are input when continuous mechanical ventilation is installed.
Reduced Duct Leakage F5	If compliance credit is **not** taken for reduced building envelope air leakage through diagnostic testing, a special "default" compliance credit can be taken for building envelope leakage reduction resulting from reduced duct leakage. To qualify for this credit all requirements of section 4.4.I4 *Duct Leakage* must be met. Compliance credit is provided for a "default" reduction in Specific Leakage Area of 0.50

Computer Input	Proposed Design Modeling Procedure
Air Retarding Wrap F6	If compliance credit is **not** taken for reduced building envelope air leakage through diagnostic testing, a special "default" compliance credit can be taken for building envelope leakage reduction resulting from installation of an air retarding wrap (i.e., housewrap). There are special qualifications for the use of these wraps to get credit which are described in Chapter 4. When compliance credit is taken for an air retarding wrap, the computer program must automatically include the air retarding wrap and the required specifications in the *Special Features and Modeling* Assumptions section of the CF-1R and CF-2 to facilitate inspection by the local enforcement agency. Compliance credit for an air retarding wrap does not require HERS rater verification. Compliance credit is provided for a "default" reduction in Specific Leakage Area of 0.50.
Natural Ventilation for Cooling F7	Approved compliance programs assume that windows are opened for natural ventilation when outside temperatures are conducive for providing outside cooling. For buildings with typical thermal mass levels, default assumptions for natural ventilation are used. For high mass buildings, compliance credit can be taken for increased free ventilation window area and increased ventilation height.
Ventilation Height Difference F8	A height difference of 2 feet is input for one-story dwelling units (even if the dwelling unit occurs in a two- or three-story building). A value of 8 feet is input for two- and three-story dwelling units. A different value for the height difference between horizontal center lines of inlet and outlet openings corresponding to the actual building design is acceptable if properly documented. An area-weighted calculation is required to document credit for any value larger than the standard value.

Computer Input	Proposed Design Modeling Procedure
G.	**Internal Gain & Thermostat Setpoints**
Internal Heat Gain G1	Total internal heat gain per day from occupants, lights, appliances and other heat-generating equipment is automatically fixed by the program according to the number of dwelling units in the building and the total conditioned floor area. The hourly schedule of internal gain is also fixed. In modeling additions, the internal heat gain associated with the addition as a separate compliance entity is also calculated by the program on a prorated basis as compared with the existing-plus-addition (see Chapter 7, Part 7.3). Internal gain related to modeling a zonally-controlled space is also automatically fixed by the program. The living zone and sleeping zone are assigned various portions of the internal gain according to specific rules. (see L1, *Zonal Control* in this section).
Thermostat Setpoints G2	Thermostat setpoints for heating, cooling and venting are fixed by the program based on setback or no setback. Settings are inaccessible by the program user. Special thermostat settings for the zonal control model are also built in and automatically used when zonal control is specified in computer methods approved with that approach (see L1, *Zonal Control* in this section). Certain types of heating and cooling equipment are exempt from the setback thermostat mandatory measure (see Chapter 2, Part 2.3). When no setback thermostat is installed, the computer method must assume a 66°F night setback heating setpoint (see Part 5.6). The program also allows the specification of *unconditioned zones* with thermostats set to insure that no heating or cooling occurs in those areas (see Subpart 5.4K, *Unconditioned Space*).

Computer Input	Proposed Design Modeling Procedure
H.	**Space Conditioning System**
Heating System Type H1	Heating system types include gas, heat pump and electric resistance. Gas refers to any non-electric fuel such as natural gas or propane. **Hydronic Space Heating** (see Subpart 5.4Q) and **Active Solar Space Heating** (see Subpart 5.4S) are covered later in this section.
Heating System Efficiency H2	For a central gas furnace, the minimum Annual Fuel Utilization Efficiency (AFUE) is 78 percent or 0.78. Non-central units such as gas wall furnaces may have a lower AFUE rating. For heat pumps, the minimum Heating Seasonal Performance Factor (HSPF) is 6.6 for package units or 6.8 for split system. (See *AFUE* and *HSPF* in the *Glossary*). For electric baseboard heating, an HSPF of 3.41 or ACOP of 1.00 is input; for electric radiant panels, an HSPF of 3.55 or ACOP of 1.04 is entered. For through-the-wall heat pumps, model a 6.6 HSPF with no duct efficiency credits (assume a default R-4.2 ducts in attic). For central air-conditioning heat pumps that meet a COP requirement, assume the actual duct conditions and calculate the HSPF as 3.2 x COP - 2.4. When no equipment has been specified at the time of the compliance run, minimum efficiencies are recommended to ensure that any equipment of minimum or higher efficiency may later be installed. For equipment that is not certified, such as radiant heaters, the efficiency value modeled must be based on either manufacturers data or an approved calculation method.
Cooling System Type H3	The cooling system is a *split system* air conditioner or heat pump, or a *packaged* air conditioner or heat pump. When mechanical cooling will not actually be installed, see the note under H4.
Cooling System Efficiency H4	Enter the Seasonal Energy Efficiency Ratio (SEER) for both air conditioners and heat pumps. For equipment not tested for SEER (e.g., greater than 65,000 Btu capacity) use the EER in place of SEER. NOTE: If no mechanical cooling is installed, enter a *SEER of 10.0 for split systems*.

Computer Input	Proposed Design Modeling Procedure

I. Duct Efficiency

For the 1998 standards, the Commission has approved new algorithms and procedures for determining duct efficiency, and has created new options for compliance credit for improvements that can be made that will increase duct efficiency. These procedures are described in Chapter 4.

J. Water Heating

All Inputs J1

All computer inputs for water heating correspond to the variables explained in Chapter 6.

K. Unconditioned Space

The ability to model an unconditioned space in the building is an optional modeling capability of approved computer methods. Consult the compliance supplement for specific details on what types of unconditioned spaces and how a particular program can model the proposed building design.

Unconditioned Zone Characteristics K1

A computer method may have a variety of capabilities that can model one or more unconditioned spaces or "zones" adjacent to conditioned space. Enclosed, unheated areas such as sunspaces, unheated storage areas and crawl spaces may be modeled explicitly if the program is approved to accurately account for the thermal interactions between conditioned and unconditioned zones. *Garages and conventional attic spaces may not be modeled as unconditioned zones.*

Except for crawl space modeling explained under 5.4L, **Controlled Ventilation Crawl Space**, the following general descriptions cover other types of unconditioned spaces that can be modeled for compliance as part of the proposed design. The number of unconditioned spaces that can be modeled is limited only by the capabilities of the approved computer method.

Computer Input	Proposed Design Modeling Procedure
Exterior Walls, Doors, Roofs/Ceilings, and All Floors K2	Surfaces that separate unconditioned space from the ambient (outdoor) temperature are considered "exterior." Surfaces that separate unheated space from heated space are treated differently as part of the *Coupling to Conditioned Space* (see K8). The name, area, U-value, orientation, tilt, absorptivity and slab characteristics of each opaque surface are input in essentially the same manner as for conditioned zones. See Subpart 5.4B, **Walls, Doors, Roofs/Ceilings and Floors** for further information.
Fenestration K3	Fenestration attributes are the same as those relating to conditioned zones described in Subpart 5.4C, **Fenestration**.
Shading K4	Shading characteristics are the same as those defined in Subpart 5.4D, **Shading**.
Thermal Mass K5	Thermal mass inputs are generally the same as those described in Subpart 5.4E, **Thermal Mass**. One exception is the amount of solar gain targeted to the mass surfaces. This "Absorbed Insolation Fraction" or "Solar Gain Distribution Factor" is automatically fixed at zero for conditioned space but is a restricted variable within an unconditioned space. See the program compliance supplement for further instructions.
Infiltration and Ventilation K6	The same rules apply as explained in Subpart 5.4F, **Infiltration/Ventilation**.
Thermostat Setpoints K7	Thermostat setpoints are fixed by the program to insure that no heating or cooling will occur.
Coupling to Conditioned Space K8	The thermal connection between conditioned and unconditioned spaces is divided into conductive and convective components. The conductive heat flow is a function of the U-value and area of the surfaces that separate the zones. The convective coupling is defined according to the actual inlet and outlet area characteristics which define ventilation between the zones. If mechanical ventilation is to be installed, the electrical energy use of the fan must be accounted for as defined in the computer method compliance supplement.

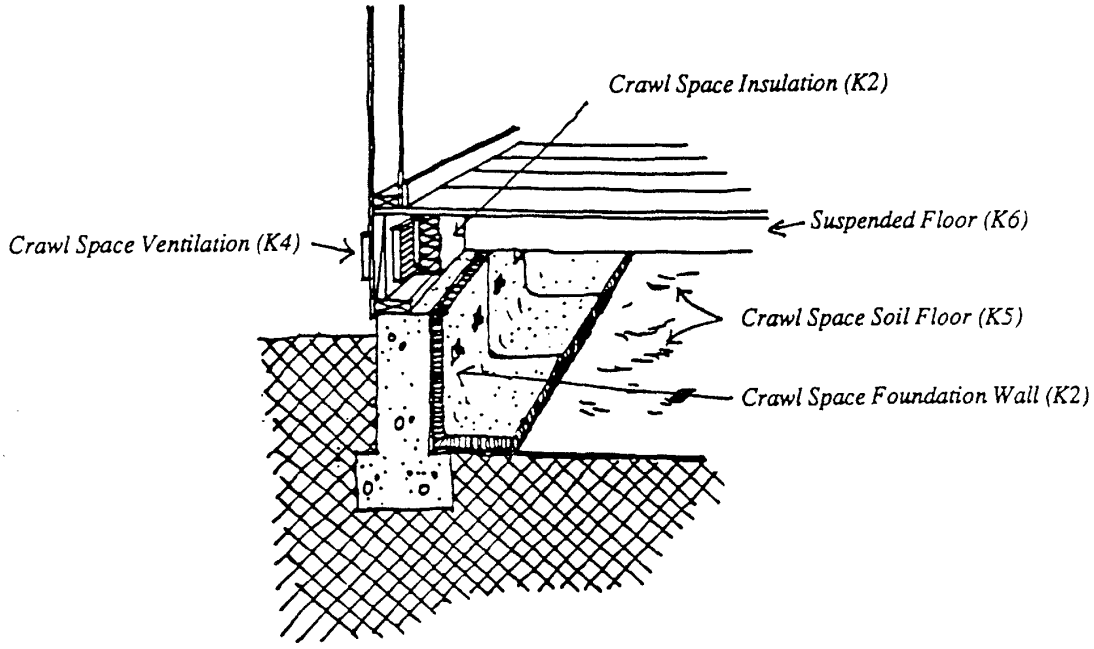

Figure 5-3: Controlled Ventilation Crawl Space

Table 5-3: Crawl Space Soil Slab Heat Loss Rate (F2) Factor

Insulation Length Along Crawl Space Soil Floor (inches)	R-Value of Insulation						
	R-0	R-5	R-11	R-13	R-15	R-19	R-21
0	0.42	0.42	0.42	0.42	0.42	0.42	0.42
20	0.42	0.33	0.30	0.29	0.28	0.27	0.27
68	0.42	0.29	0.24	0.23	0.22	0.20	0.20

1. Based on ASHRAE Method of Calculating Transmission Heat Loss, 1989 ASHRAE Handbook of Fundamentals.

Computer Input	Proposed Design Modeling Procedure
L.	**Controlled Ventilation Crawl Space (CVC)**
Crawl Space Model L1	A crawl space may be modeled as a separate unconditioned zone only when reduced crawl space vent areas are implemented. This approach is part of a Commission-approved exceptional method that establishes the crawl space soil as a type of slab with heat loss factors similar to the slab edge loss (F2) factors explained in input B11. Refer to the Chapter 8, Part 8.7 for details on the requirements pertaining to installation of foundation wall insulation, drainage, ground water and soils, ventilation and crawl space ground cover. (See Figure 5-3). Computer programs approved for modeling the crawl space automatically fix certain variables such as crawl space heat capacity (1.4 x suspended floor area), infiltration rate (0.22 air changes per hour), soil conductivity (0.60 Btu/hr-ft^2-ºF) and volumetric heat capacity (27 Btu/ft^3-ºF).
Crawl Space Foundation Wall L2	The foundation wall and insulation are modeled as it will be built including band joist area and the stem wall above and below outside grade level. The stem wall below the outside grade and above the crawl space grade may be considered a bermed wall and assumed to be fully shaded.
Crawl Space Volume L3	The average crawl space height from the ground to the bottom of the subfloor times the floor area above the crawl space, in cubic feet.
Crawl Space Ventilation L4	One half the actual total vent area shall be considered inlet area and one half outlet area. The crawl space ventilation area and type shall be shown on the plans and specifications.
Crawl Space Soil Floor L5	The crawl space soil floor is modeled as a four inch thick mass element with its actual area. Slab edge losses are modeled according to the crawl space perimeter length and the following special slab heat loss rate (F2) factor (Table 5-3).
Suspended Floor L6	The suspended (raised) floor between the crawl space and conditioned space is modeled as built: actual area and U-value (with indoor air films assumed for both sides of the surface).

Computer Input	Proposed Design Modeling Procedure

M.
Zonal Control Features M1

Zonal Control

Zonally controlled space heating and cooling systems must meet the eligibility requirements explained in Chapter 8, Part 8.8. These systems must have a separate thermostat in the "living zone" and "sleeping zone" of the dwelling unit and a nonclosable opening area between the zones of 40 square feet or less.

A dwelling unit may meet zonal control eligibility requirements by having one or more individual HVAC units serving only the "Living" zone and one or more units serving only the "Sleeping" zone as an alternative to a single central HVAC unit with zonal control capabilities.

Approved computer programs model a zonally controlled system using certain built-in assumptions: (see Figure 5-4).

- User-defined Living and Sleeping Zones, each with its own thermostat setpoints for heating, cooling and venting according to fixed occupancy schedules. These schedules include setback and setup temperatures for each zone throughout the day. (Each Living or Sleeping Zone created for modeling purposes may be comprised of one or more actual HVAC zones.)
- A U-value of 0.293 is used for uninsulated wood frame walls between zones.
- A U-value of 20.0 is used for nonclosable openings.
- Lightweight mass heat capacity proportioned according to each zone's percent of the total floor area.

Computer Input	Proposed Design Modeling Procedure
	• Internal gain distribution is 20,000 Btu + 15 Btu/ft^2 per day for the Living Zone and 15 Btu/ft^2 per day for the Sleeping Zone according to a fixed hourly schedule. When cooling is not installed but is considered "optional". zonal credit for both heating and cooling systems can be taken as long as: • All the zonal control criteria are met; • The system is prepared for the cooling system (i.e., designed to be interconnected with the central furnace and with ducts sized for the air flow required for cooling); • Common ducts are sized to handle the cooling air flow (cubic feet per minute); • The location of the outdoor compressor is identified; and, • The electrical panel is prepared to handle the load for a future air conditioner.
Variable Inputs M2	All physical attributes of the building are entered as part of either the Living Zone or Sleeping Zone according to the proposed building design. Fenestration and shading, walls, roofs/ceilings, floors, thermal mass and ventilation are all entered for each conditioned zone. The actual nonclosable area between zones is modeled, as well as the areas and U-values of surfaces between zones.

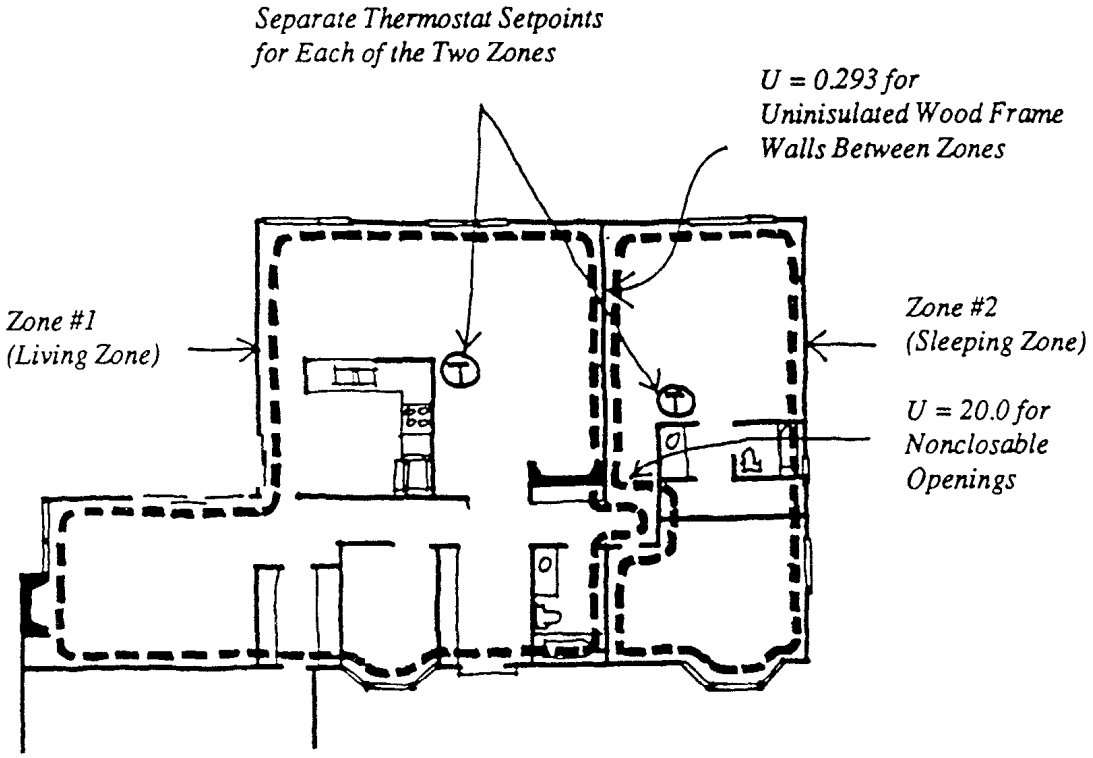

Figure 5-4: Zonal Control Modeling Assumptions

Computer Input	Proposed Design Modeling Procedure
N	**Radiant Barrier** Energy credit for truss mounted radiant barrier installations is calculated as a ceiling insulation modifier to the U-value and is also reflected in attic temperatures that result in better HVAC distribution efficiencies for ducts in an attic below a radiant barrier. Radiant barriers must meet specific eligibility and installation criteria as specified in Chapter 8, Part 8.13. The radiant barrier and installation criteria will be listed on the CF-1R and CF-2R as a *Special Features and Modeling Assumptions*.

Computer Input	Proposed Design Modeling Procedure
Radiant Barriers N1	Installation of radiant barriers can improve building energy efficiency, particularly in hot climate zones. Radiant barriers are defined as fabric-type materials installed in the ceiling/roof assembly and having an emissivity of 0.05 or less. To use the Commission-approved method of calculating the energy savings of radiant barriers, all installation and eligibility criteria listed in Chapter 8, Part 8.13 must be met. The radiant barrier energy credit is an adjustment to the ceiling U-value allowed when the ceiling is adjacent to an attic with a radiant barrier. Consult the *User's Manual* for each approved computer method to determine required inputs for radiant barriers. A radiant barrier credit is also available to account for the effects of radiant barriers on duct efficiency. This is described in Chapter 4 under duct efficiency.
O.	**Solar and Wood Stove Boiler Water Heating**
All Inputs O1	All inputs for energy credit for use of solar or wood stove boiler-assisted water heating correspond to the variables explained in Chapter 6. Solar credit is provided through a Solar Savings Fraction (SSFj) derived from an f-Chart analysis.
P.	**Combined Hydronic Space/Water Heating**
All Inputs P01	All inputs for combined hydronic space and water heating correspond to the variables explained in Chapter 6.

Computer Input	Proposed Design Modeling Procedure
Q.	**Dedicated Hydronic Space Heating**
Hydronic System Q1	A hydronic heating system is defined as one that has its space heating device(s), storage tank(s), distribution system and other components interconnected by common hot water piping. The Commission-approved method for calculating the overall efficiency of a hydronic space heating system is explained in Chapter 8, Part 8.9. See Chapter 6, Part 6.5 for information on combined hydronic space and water heating systems and how to calculate the energy use. The Effective AFUE (minimum 0.80 AFUE) is obtained through that calculation method and input into the programs as the heating system efficiency with a Duct Efficiency Factor of 1.00 (ducts are assumed to be located in conditioned space). If pipes are located in unconditioned space the AFUE must be adjusted for pipe losses. Solar water heating integrated into a combined hydronic system is explained in Chapter 6, Part 6.3. Active Solar Space Heating is discussed in section S below and in Chapter 8, Part 8.16.
R.	**Building Additions**
Various Inputs, Addition Alone R1	Internal gains are based on the fractional dwelling unit. The dwelling unit entry is determined by calculating: $\frac{\text{Addition}}{\text{Existing+Addition}}$. Credit for zonal control is not allowed for an addition modeled alone.
Existing Plus Addition R2	All inputs are explained in Chapter 7, Part 7.3.

Computer Input	Proposed Design Modeling Procedure
S.	**Active Solar Space Heating**
Active Solar Space Heating System S1	To determine the energy savings of an active solar space heating system, it is first necessary to obtain the total space heating load per month in order to enter those values into an approved version of the f-Chart program. Therefore, the monthly space heating load must be analyzed using an approved computer method so that the solar space contribution can be assessed (see Chapter 8, Part 8.16). Except for monthly space heating loads, all other values that are entered into f-Chart must be consistent with the fixed values listed in Chapter 6, Part 6.3 and Chapter 8, Part 8.16, and the actual active solar hot water system design. Since building or dwelling unit monthly heating loads are not required as part of the standardized compliance reports (see Part 5.5), a special output report from the computer method may be needed. Consult the program compliance supplement for details, then proceed to Chapter 8, Part 8.16.

5.5 COMPUTER METHOD DOCUMENTATION

Standard Reports

For consistency and ease of enforcement, the manner in which building features are reported by compliance computer programs is standardized. Commission approved computer programs must automatically produce compliance reports in this standard format. These standard reports are:

- Certificate of Compliance, CF-1R
- Computer Method Summary, C-2R

Both the CF-1R and the C-2R must have two highly visible sections, one for special features and modeling assumptions, and a second for features requiring verification by approved home energy rating system (HERS) providers/raters. These two sections serve as "punchlists" for special consideration during compliance verification by the local building department and HERS rater. Items listed in the *Special Features and Modeling Assumptions* section indicate the use for compliance of unusual features or assumptions, and call for special care by the local building department. Items listed in the *HERS Required Verification* section are for features that rely on diagnostic testing and independent verification by approved HERS providers/raters to insure proper field installation. Diagnostic testing and verification by HERS providers/raters is in addition to local building department inspections.

Figures 5-5a through 5-6b illustrate the CF-1R and C-2R forms for sample buildings generated by the public domain computer program, CALRES2.

Other Forms

Some additional forms are required but are not required to be printed out by the computer methods. These are:

- Mandatory Measures Checklist, MF-1R
- Installation Certificate, CF-6R
- Insulation Certificate, IC-1

Other forms and supporting documents may be applicable to a particular set of calculations:

- Construction Assembly U-Value, Form 3R
- Certificate of Field Verification and Diagnostic Testing, Form CF-4R
- Solar Heat Gain Coefficient Worksheet, Form S
- Manufacturer's Specifications for HVAC & Water Heating Equipment

5.6 STANDARD DESIGN ASSUMPTIONS

Each approved computer method must automatically calculate the energy budget for the standard design (see Part 5.2). This feature of the computer method must define the *custom budget* or *Standard Design run* based upon data entered for the *Proposed Design* using all the correct fixed and restricted inputs. These inputs cannot be altered in the *Proposed Design* except as specified in Part 5.4 or the computer method compliance supplement.

The computer method defines the standard design by modifying the geometry of the Proposed Design and inserting the building features of Package D as specified in the Standards. This process is built into each approved computer method (ACM) and the user cannot access it. Key details on how the standard design is created and calculated by the computer methods, including the listing of fixed and restricted input assumptions, is available in the latest edition of the Commission's ***Residential Alternative Calculation Methods Approval Manual***

Standard Design: General Approach

The basis of the standard design is Package D, contained in Tables 3-Z1 through 3-Z16 in Chapter 3, Part 3.4.

The standard design assumes the same total conditioned floor area, conditioned slab floor area, and volume as the proposed design, and the same gross exterior wall area as the proposed design, except that the wall area in each of the four cardinal orientations is equal. The standard design uses the same roof/ceiling area, raised floor area and slab-on-grade area and perimeter as the proposed design, assuming the standard insulation R-values listed in Tables 3-Z1 through 3-Z16.

Total fenestration area is determined by the package specification and evenly distributed between the four cardinal orientations. Solar heat gain coefficients are those listed in Packages D, and no fixed shading devices such as overhangs are assumed.

The standard design includes minimum efficiency heating and cooling equipment, as well as the minimum duct R-value with ducts in a vented attic. The water heating system of the standard design is assumed to be equal to the water heating energy budget (explained in Chapter 6).

Chapter 6: Water Heating

6.0 SUMMARY

This chapter explains the relationship of water heating energy to the overall *Energy Efficiency Standards* (hereafter standards) compliance for a building. The Introduction briefly summarizes the *Water Heating Calculation Method* and explains when calculations and forms are required. This is followed by a more detailed discussion of the Basic Approach to the Method and step-by-step instructions on how to complete the water heating forms. Case studies outline the requirements for common and unusual water heating systems. Separate calculations and forms are explained for hydronic space and water heating systems. The chapter concludes with detailed descriptions of system components and installation criteria.

CHAPTER OVERVIEW:

Part	Topic	Page
6.1	**Introduction**	**6-1**
	Efficiency Terms Defined	6-1
	Water Heating Calculation Method	6-3
	Water Heater Type	6-4
	Auxiliary Inputs	6-4
	Distribution System	6-5
	When Are Water Heating Forms Required?	6-5
	Standard Water Heating Systems	6-5
	Pre-Calculated Non-Standard Systems	6-7
	Approved Computer Methods	6-7
	Prescriptive Packages	6-7
	Performance Methods	6-7
	Water Heating Calculations for Additions	6-8
6.2	**Basic Approach**	**6-10**
6.3	**Instructions, Forms & Tables**	**6-12**
	DHW-1	6-12
	DHW-2A	6-14
	DHW-2B	6-14
	DHW-3	6-15
	DHW-4	6-16
	DHW-5	6-17
6.4	**Case Studies**	**6-27**
6.5	**Combined Hydronic Space and Water Heating**	**6-35**
6.6	**System Descriptions: Water Heaters, Auxiliary Inputs and Distribution Systems**	**6-35**

Applicable sections of *the California Code of Regulations*, Title 24, Part 6: §150(j), 151(b), 151(f)8, 152.

6.1 INTRODUCTION

Introduction

Water heating energy use is important because it accounts for about a quarter of residential energy consumption, as illustrated in Figure 6-1. This is the same percentage used statewide for residential space heating, and six times the amount used for residential cooling. Water heating energy may be an even higher percentage of the total energy consumption in small residences with lower space heating and cooling requirements.

Figure 6-2 shows the general flow of energy from the fuel source through the water heating system to the end use in the building. *Total energy in* is a combination of source energy plus any auxiliary inputs, which equals total energy out. *Total energy out* includes energy lost through electric power generation and transmission to the residence, water heater recovery efficiency and standby loss, distribution system losses and finally, hot water delivered to fixtures and appliances (see *Source Energy* in the *Glossary*).

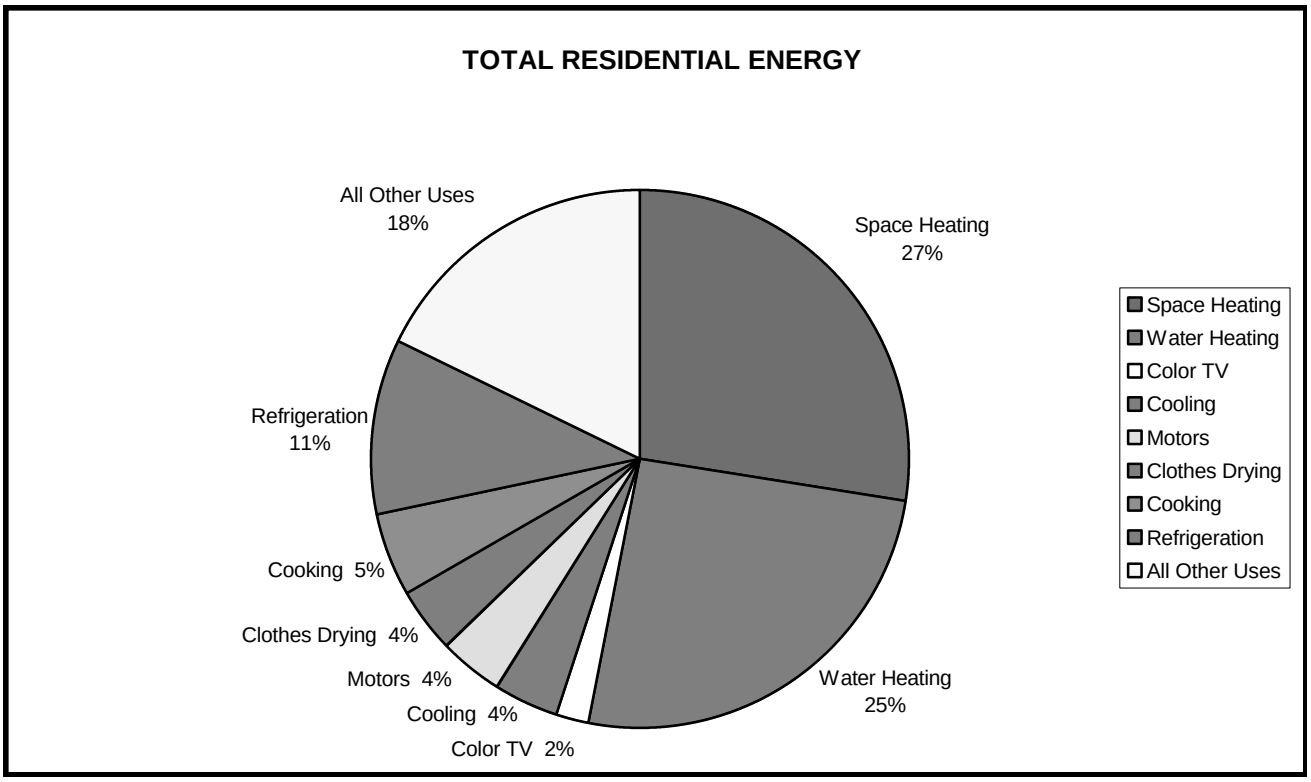

Figure 6-1: Largest Residential Energy End

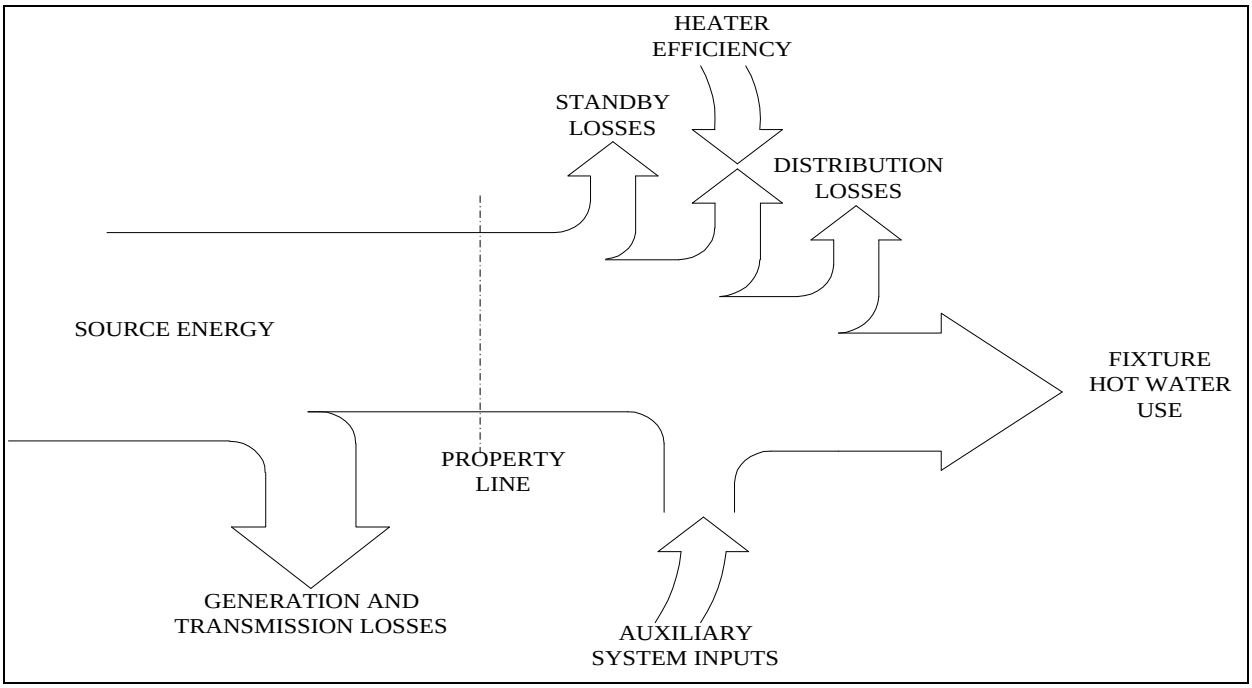

Figure 6-2: Water Heater System Energy Flow Diagram

Energy Factor is a measure used for *Heater Efficiency* for most water heaters used in single family dwellings and includes standby losses, recovery efficiency (the ratio of energy output used to heat the water divided by energy input), and the tank volume. More efficient water heaters have a higher EF.

Standby Loss accounts for energy lost while storing heated water. It includes heat losses through the water heater tank walls, fittings and flue, if any, plus any pilot light energy. Standby loss depends on the design and insulation of the water heater, as well as the difference between the temperature of the water and that of the air around the tank. Water heating energy use can be reduced by decreasing standby loss. This can be done by selecting a more efficient heater.

The water heater efficiency rating for small water heaters used in the water heating calculation method is the ***Energy Factor*** (EF) which combines tank volume, internal insulation, recovery efficiency and standby loss. The higher the EF the more efficient the water heater.

Recovery energy is the energy used to heat water, including the inefficiency (or efficiency loss) of the heater.

Recovery load is the amount of energy in hot water that the water heater needs to provide. It includes only the energy in the hot water that is used by the building occupant and the distribution losses.

Standby loss is over a quarter of a gas storage type water heater system's total energy use. When the system fuel is natural gas, there are no generation or transmission losses as are associated with electricity. Fuel type is very important in determining water heating energy use. While natural gas, LPG or oil can be burned directly to heat water, electricity is typically generated in a power plant far from the residence and then transmitted over power lines to the final end use. Approximately two thirds of the source energy used to generate electricity is lost in this process.

Any electric water heating system must automatically account for the inefficiency of the fuel type. Standard electric water heaters are not considered energy efficient for this reason.

Electric heat pump water heaters, however, are closer to the efficiency of typical gas systems, because they use the outdoor air as a heat source in heating water (see *Heat Pump* in the *Glossary*).

See Table 6-1a and Part 6.6 for more information on water heater types.

All water heating systems must meet the mandatory measures explained in Chapter 2, and all water heaters installed in California must be certified to the Commission (see Chapter 2, Part 2.4 and Chapter 1, Part 1.6). Several values that are needed in the water heating method are listed in this directory.

Compliance/
Plan Check

Water Heating Calculation Method

The water heating calculation method estimates the amount of source energy used by any water heating system (the *Proposed Energy Use*) and compares it to the energy budget for water heating established by the standards (the *Standard Energy Use*).

Parts 6.2 and 6.3 give detailed information and instructions on using the water heating calculation method. Part 6.3 includes blank copies of the various forms and the tables used in the calculations.

The calculation method looks at three components of each water heating system:

1. *Water Heater Type*
2. *Auxiliary Input (nondepletable energy sources)*
3. *Distribution System Type*

WATER HEATER TYPE

Water heater types which can be analyzed using the water heating calculation method are:

- Standard Water Heater
- Storage Gas
- Large Storage Gas
- Storage Electric
- Storage Heat Pump
- Instantaneous Gas
- Instantaneous Electric
- Indirect Gas
- Oil-Fired

See Table 6-1a for brief descriptions of each water heater type and Part 6.6 for more detailed descriptions plus installation criteria.

AUXILIARY INPUTS

Auxiliary inputs are other energy sources that contribute to overall water heating. The calculation method allows water heating credits for three auxiliary input types that save energy by using nondepletable energy sources:

- Passive Solar Water Heaters
- Active Solar Water Heaters
- Wood Stove Boilers

See Table 6-1b for brief descriptions of each auxiliary input type and Part 6.6 for more detailed descriptions plus installation criteria.

Table 6-1a: Summary of System Components: Water Heaters

Water Heaters and Related Components	Description
Standard Water Heaters	Storage gas water heaters, 50 gallons or less (R-12 external insulation is a mandatory requirement for any water heater with an EF of less than 0.58).
Storage Gas	A gas water heater with a storage capacity of two gallons or more and a rated input of 75,000 Btu/hr or less.
Large Storage Gas	A storage gas water heater with greater than 75,000 Btuh input.
Storage Electric	An electric water heater with a storage capacity of two gallons or more.
Storage Heat Pump	An electric water heater that uses a compressor to transfer thermal energy from one temperature level to a higher temperature level for the purpose of heating water.
Instantaneous Gas	A gas water heater that heats water on demand rather than storing preheated water in a tank. Manufacturer's specified storage capacity must be less than two gallons.
Instantaneous Electric	An electric water heater that heats water on demand rather than storing preheated water in a tank. Manufacturer's specified storage capacity must be less than two gallons.
Indirect Gas	A water heater consisting of a storage tank with no heating elements or combustion devices, connected via piping and recirculating pump to a heat source typically consisting of a gas or oil fired boiler.

Table 6-1b: System Component Descriptions: Auxiliary Inputs

Auxiliary Systems	Description
Passive Solar Water Heaters	Systems which collect and store solar thermal energy for domestic water heating applications and do not require electricity to recirculate water through a solar collector.
Active Solar Water Heaters	Systems which collect and store solar thermal energy for domestic water heating applications requiring electricity to operate pumps or other components.
Wood Stove Boilers	Wood stoves equipped with heat exchangers for heating domestic hot water (see Figure 6-8).

DISTRIBUTION SYSTEM

The water heating *distribution system* is the configuration of piping, pumps and controls which regulates delivery of hot water from the water heater to all end uses within the building. The water heating method gives credits for especially energy-efficient distribu-0tion systems, such as non-recirculating systems with pipe insulation, while assigning penalties for less energy-efficient systems, such as continuous recirculation systems with no controls (see Table 6-6).

Distribution systems that may be analyzed are:

- Standard Distribution System
- Point of Use
- Hot Water Recovery
- Pipe Insulation
- Parallel Piping
- Recirculation: Continuous
- Recirculation: Temperature Controlled
- Recirculation: Time Controlled
- Recirculation: Time & Temperature Controlled
- Recirculation: Demand Pumping
- Combined Credits

Table 6-1c gives brief definitions of all of the distribution system types listed above, while Part 6.6 describes the systems in more detail and explains any required installation criteria.

WHEN ARE WATER HEATING FORMS REQUIRED?

Water heating forms must be provided only for non-standard systems that are not listed in Chapter 3 (for Prescriptive Packages). Table 6-2 summarizes when water heating forms are required within the different compliance approaches.

STANDARD WATER HEATING SYSTEMS

If a proposed water heating system in a single family residence has no more than one *standard water heater* (as defined below) with a *standard distribution system*, then the water heating system need not be analyzed, but may be assumed to meet the water heating energy budget without requiring any additional forms or calculations. Compliance is demonstrated by simply listing the water heater on the Certificate of Compliance (CF-1R) Form.

The following water heater type is considered a *standard water heater:* storage gas water heater, 50 gallons or less, with a standard distribution system.

NOTE:

Any storage heat pump water heater, 50 gallons or less, with an EF of at least 1.8 in Climate Zones 1 - 15, or at least 2.6 in Climate Zone 16, and a standard distribution system meets the water heating energy budget.

Table 6-1c: System Component Descriptions: Distribution Systems

Distribution Systems	Description
Standard	Standard system without any pumps for distributing hot water
Point of Use	System with no more than 8 feet horizontal distance between the water heater and hot water fixtures, except laundry. (Not used with central systems in multi-family buildings.)
Hot Water Recovery	System which reclaims hot water from the distribution piping by drawing it back to the water heater or other insulated storage tank. (Not used with central systems in multi-family buildings.)
Pipe Insulation	R-4 (or greater) insulation applied to 3/4 inch or larger, non-recirculating hot water mains in addition to insulation required by the standards, Section 150(j) (first five feet from water heater on both hot and cold water pipes).
Parallel Piping	Individual pipes from the water heater to each point of use.
Recirculation: Continuous	Distribution system using a pump to recirculate hot water to branch piping though a looped hot water main with no control of the pump, such that water flow is continuous. (Not used with instantaneous water heaters.) Pipe insulation is required.
Recirculation: Temperature	Recirculation system that uses temperature controls to cycle pump operation to maintain recirculated water temperatures within certain limits. (Not used with instantaneous water heaters.) Pipe insulation is required.
Recirculation: Time	Recirculation system that uses a timer control to cycle pump operation based on time of day. (Not used with instantaneous water heaters or with central systems in multi-family buildings.) Pipe insulation is required.
Recirculation: Time/Temp	Recirculation system that uses both temperature and timer controls to regulate pump operation. (Not used with instantaneous water heaters or with central systems in multi-family buildings.) Pipe insulation is required.
Recirculation: Demand	Recirculation system that uses brief pump operation to recirculate hot water to fixtures just prior to hot water use when a demand for hot water is indicated. (Not used with instantaneous water heaters or with central systems in multi-family buildings.)
Recirculation/Demand w/ Hot Water Recovery	Combined system consisting of Recirculation: Demand and Hot Water Recovery (Not used with instantaneous water heaters or with central systems in multi-family buildings).
Recirculation/Demand w/ Pipe Insulation	Combined system consisting of Recirculation: Demand and Pipe Insulation (Not used with instantaneous water heaters or with central systems in multi-family buildings).

A *standard distribution system* is one which does not incorporate a pump to recirculate hot water, and does not take credit for any special design features. A distribution system normally eligible for energy credits, such as one with pipe insulation, may be modeled as standard (i.e., no credits) to avoid water heating calculations.

See Part 6.6 for more detailed descriptions of standard water heaters and distribution systems, including installation criteria.

Table 6-2: When Are Water Heating Forms Required?

	Water Heating System Type		
Compliance Method	**Standard**	**Pre-Calculated Non-Standard**	**Other Non-Standard**
Prescriptive Packages	No	No [1,2]	Yes[4]
Performance Method[4]	No	n/a	No [1,4]

Notes:
1 No water heating forms are required, except to document solar collector systems and/or wood stoves.
2 Pre-calculated non-standard systems are listed in Chapter 3.
3 Approved programs perform water heating calculations internally; forms need not be submitted.
4 See Tables 6-3 and 6-4 for a summary of water heating forms and compliance scenarios.

PRE-CALCULATED NON-STANDARD SYSTEMS

To simplify compliance with the prescriptive packages the Commission has developed lists of non-standard water heating systems that may be used without submitting water heating calculations.

Systems pre-calculated and shown to meet or exceed the efficiency of a standard system are found in Chapter 3, Table 3-4.

APPROVED COMPUTER METHODS

Approved computer programs perform water heating calculations internally, making water heating compliance forms unnecessary. However, other documentation may be required to support water heating credits for auxiliary inputs or other unique system components used for compliance.

WATER HEATING CALCULATIONS AND ENERGY COMPLIANCE

The basic structure of the water heating calculation method is to:

(1) Calculate the *Proposed Energy Use* of the proposed water heating system

(2) Determine the *Standard Energy Use* (the energy budget)

(3) Compare the *Proposed Energy Use* to the *Standard Energy Use*

PRESCRIPTIVE PACKAGES

When demonstrating energy compliance for a building using the Prescriptive Packages, the proposed energy use for a water heating system must be less than the standard energy budget (see Chapter 3, Part 3.2). This requirement may be met by:

- Installing a standard water heating system;
- Installing an approved non-standard system as listed in Chapter 3, Table 3-4; or,
- Completing the calculations and forms contained in Part 6.3 to verify that the proposed energy use is less than the standard energy use.

PERFORMANCE METHODS

When demonstrating energy compliance for a building using an approved performance method, the building's total (combined) space conditioning and water heating energy consumption cannot exceed the sum of the total space conditioning and water heating energy budgets (see Chapter 4, and Part 4.2).

When using an approved computer program, water heating compliance is calculated internally within the program.

If the building has a standard water heating system as defined above, the Proposed Energy Use is equal to the Standard Energy Use in the performance methods.

WATER HEATING CALCULATIONS FOR ADDITIONS

There are three typical situations for water heating systems in building additions:

(1) The addition uses the existing water heating system. No new water heater is added.

If no new water heater is added, the addition may be analyzed by itself without requiring water heating calculations. If the addition is analyzed using the existing-plus-addition method (performance), then either the existing water heating system may be modeled as is or it may be assumed to be a standard water heating system (see Chapter 6, Part 6.3) (Use the same modeling assumptions for all calculations.)

(2) A new water heater, installed to replace the existing water heater, serves the entire existing building plus the addition, and there is no increase in the number of water heaters in the building.

In this case water heating calculations are not required because the total number of water heaters does not increase. The new water heater serves as a replacement; for the purpose of compliance analysis, it may be assumed to be a standard water heater.

(3) A new water heater (or heaters) is added with the addition, resulting in an increase in the number of water heaters (see below).

Energy Code

Additions that Increase the Total Number of Water Heaters (Section 152(a), Exception No. 3)

If the addition will increase the total number of water heaters in the building, one of the following types of water heaters may be installed to comply with Section 152(a)1. or Section 152(a)2.A, and Section 152 (c):

(1) A gas storage non-recirculating water heating system that does not exceed 50 gallons capacity; or

(2) If no natural gas is connected to the building, an electric storage water heater that does not exceed 50 gallons capacity, has an energy factor not less than 0.90; or

(3) A water heating system determined by the Executive Director to use no more energy than the one specified in (1) above; or if no natural gas is connected to the building, a water heating system determined by the Executive Director to use no more energy than the one specified in (2) above.

For prescriptive compliance with Section 152(a)1., the water heating systems requirement in Section 151(f)8. shall not apply. For performance compliance for the addition alone, only the space conditioning budgets of Section 151(b)2. shall be used; the water heating budgets of Section 151(b)1. shall not apply.

The performance approach for the existing building and the addition in Section 152(a)2.B may be used to show compliance, regardless of the type of water heater installed.

Compliance/
Plan Check

Additions that Increase the Total Number of Water Heaters

When there is an increase in the number of water heaters, the addition may be analyzed using any of the compliance approaches under certain conditions. Addition alone compliance may be used if:

(a) The additional water heater is either a 50-gallon or less, gas storage, nonrecirculating water heater or equivalent (see Chapter 6, Table 6-2) that also meets the mandatory requirements (see Chapter 2);

(b) The home does not have natural gas available and the additional water heater is either a 50-gallon or less electric water heater with an EF of 0.90 or greater or equivalent (see Chapter 6, Table 6-2);

If the conditions in (a) or (b) are met, water heating calculations are not required with any of the compliance approaches, and no credit or penalty is allowed. Computer compliance calculations will show proposed energy use for water heating to be equal to standard energy use.

Existing-plus-addition compliance may be used when a new water heating system is proposed which is not described in (a) and (b) above, is not found in Chapter 6, Table 6-2, or to take credit for a more efficient water heating system.

See Examples 6-8, 6-9 and 6-12 in Part 6.4, and Chapter 7 for more information on compliance of water heaters associated with additions.

Inspection

Water Heating Inspection

Check that the number and types of water heater systems installed, as indicated on the CF-6R and check to see that this corresponds to the approved CF-1R. The distribution system is also significant and must correspond to plan specifications. For example:

- If the plans indicate the presence of a hot water recovery system, it must be installed.
- If a recirculation system is installed, verify that it was accounted for in the compliance documentation (CF-1R) and check for any required controls (e.g., demand pump, timer).
- If a point of use credit is specified, the water heater must be no further than 8 feet from all hot water outlets (excluding washing machines).

The chart below summarizes the different distribution system types and lists whether each one is a credit or a penalty as compared with the standard distribution system.

Verify the make and model number of the installed water heater unit matches that listed on the Installation Certificate (CF-6R).

If the water heater has an EF of less than 0.58, an R-12 water heater blanket is required (internal insulation cannot be used to satisfy this mandatory requirement). For water heaters with 0.58 EF or higher, no insulation blanket is required. The blanket should be securely attached around the water heater. The top of the water heater should not be insulated and a cutout in the blanket should be provided for combustion air intake.

Water Heating Distribution System Credits and Penalties

Distribution System	Credit or Penalty
Hot Water Recovery	Credit
Point of Use	Credit
Pipe Insulation	Credit
Parallel Piping	Credit
Recirculation:	
No Control	Penalty
Time	Penalty
Temperature	Penalty
Time/Temperature	Credit
Demand	Credit

6.2 BASIC APPROACH

Water Heating Budget
(Section 151(b)1)
Energy Code

Water heating budgets. The budgets for water heating systems are those calculated from Equation No. 1-N.

EQUATION NO. 1-N
ANNUAL WATER HEATING BUDGET (AWB):

For dwelling units less than 2500 ft²:

$$AWB\ (kBtu/yr.\text{-}ft^2) = \frac{(16370)}{CFA} + 4.85$$

For dwelling units equal to or greater than 2500 ft²:

$$AWB\ (kBtu/yr.\text{-}ft^2) = \frac{(26125)}{CFA}$$

Where CFA = the building's conditioned floor area in square feet.

The annual water heating budget calculated from Equation No. 1-N may be met by either:

A. Calculating the energy consumption of the proposed water heating system using an approved calculation method without an external insulation wrap or

B. Installing any gas storage type non-recirculating water heating system that does not exceed 50 gallons of capacity, and that meets the minimum standards specified in the Appliance Efficiency Standards.

NOTE: Storage gas water heaters with an energy factor of less than 0.58 must be externally wrapped with insulation having an installed thermal resistance of R-12 or greater in accordance with Section 150(j).

Compliance/
Plan Check

Water Heating Budget

As outlined in Part 6.1, the water heating method involves the calculation of the *Proposed Energy Use* of the proposed system, and the determination of the *Standard Energy Use* for the dwelling unit being analyzed (see form DHW-1).

The standard water heating energy use per dwelling unit is dependent on the total conditioned floor area of the dwelling unit. Allowable water heating energy use per dwelling unit increases with an increase in floor area. However, 26,125 kBtu/yr-unit is the maximum standard water heating energy use for dwelling units larger than 2,500 square feet (Section 151(b)1 of the standards).

Standard energy use is assumed to be climate-independent. It is based on the energy use of a federally rated minimum efficiency 50 gallon gas water heater (EF 0.525) with a standard distribution system (see Part 6.6).

Presented as a hand method in this chapter, water heating calculations use a series of forms and tables included at the end of Part 6.3. The forms and tables used are selected according to the specific proposed water heating system. Tables 6-3 and 6-4 summarize the forms as well as their application in a range of compliance situations.

The water heating method can be used to analyze water heating energy use of:

- A specific single dwelling unit;
- An average dwelling unit in a multi-family building; or,
- Each different dwelling unit in a multi-family building.

NOTE:

When multi-family water heaters are *shared* by more than one dwelling unit, compliance must be based on the average of the square feet of the dwelling units served by each (different) shared water heater.

Table 6-3: Summary of Water Heating Forms

Number	Name/Function	Application
DHW-1	Water Heating Worksheet	Non-standard water heating system
DHW-2A	Water Heating for Single Family w/ Multiple Heaters	Single-family dwelling unit with more than one water heater
DHW-2B	Water Heating for Multi-Family	Multi-family building
DHW-3	Large or Indirect Water Heater Worksheet	Large Storage Gas or Indirect Gas heater (see Part 6.6)
DHW-4	Auxiliary Input Worksheet	Passive solar, active solar or wood stove boiler
DHW-5	Combined Hydronic Space and Water Heating	Hydronic system serving both space heating and water heating (see Part 6.5)

Table 6-4: Summary of Compliance Scenarios

	Compliance Scenario	Forms Submitted
a.	One Standard System Per Dwelling Unit	None
b.	Pre-Calculated System (see Chapter 3)	None
c.	One Non-standard System Per Dwelling Unit (other than pre-calculated systems)	DHW-1
d.	Single Family Dwelling w/Multiple Heaters (other than pre-calculated systems)	DHW-1, DHW-2A
e.	Multi-Family Building	DHW-1, DHW-2B
f.	Solar or Wood Stove (Auxiliary Input)	DHW-4
g.	Combined Hydronic Space and Water Heating	DHW-5
h.	Additions (see Chapter 7)	Same as a, b, c, d, e, f or g above

The compliance methodology has three steps:

1. Determine the *Adjusted Recovery Load* to be satisfied by the water heating system. The *Standard Recovery Load* (from Table 6-5) may be modified by *distribution piping system credits or penalties* (from Table 6-6) and/or a *solar energy credit* (from DHW-4).
2. Determine the *Proposed Energy Use* of the water heating system. The *Basic Energy Use* (from Table 6-7 according to heater type) may be modified by a *wood stove boiler credit* (from DHW-4).
3. Determine the *Standard Energy Use* of the dwelling unit(s) (from Table 6-5).

Water heating compliance depends on a comparison of the Proposed Energy Use and the Standard Energy Use:

- **Prescriptive:** The Proposed Energy Use must be less than or equal to the Standard Energy Use for compliance of the water heating system.
- **Performance Methods:** The difference between Proposed and Standard Water Heating Energy Use is either a *credit* resulting in a *lower kBtu/sf-yr* of total proposed energy use, or a *penalty* resulting in a *higher kBtu/sf-yr* of total energy use.

Water Heating in the Performance Methods

Using the performance approach, *energy tradeoffs* can be made between water heating and space conditioning energy use.

If the proposed water heating energy use is greater than the standard energy use, the water heating system and building comply as long as:

- The total proposed design energy use, in kBtu/sf-yr, is the same or less than the total standard design energy budget using a computer method as explained in Chapter 5.

6.3 INSTRUCTIONS, FORMS & TABLES

Compliance/
Plan Check

Instructions

The instructions presented in this part provide a step-by-step description for each worksheet and form. To see completed sample worksheets for different water heating systems, see Part 6.4. For an overview of which forms apply to which compliance scenarios, refer to Table 6-4.

The worksheet for Combined Hydronic Space and Water Heating, DHW-5, is contained in Part 6.5.

Heater type data is contained in the Commission's listing of certified water heaters. Data on water heaters, for use with a database program is also available from the Commission's Web site at:

ftp://energy.ca.gov/pub/efftech/appliance/

DHW-1, Water Heating Worksheet

Complete the DHW-1 form whenever there is a non-standard water heating system (see Parts 6.1 and 6.6). You may calculate up to three different heater types per sheet. If you have more than three different types, use additional copies of the worksheet.

The section of the worksheet entitled *Energy Use Calculation* refers to tables included at the end of this part.

Title Block

- Enter **Project Title** and **Date**.
- Enter the **Number of Different Water Heater Types** (this value may not necessarily be the same as the *total* number of individual water heaters in the building.)
- Enter the **Total No. of Water Heaters**.
- Enter the total **Conditioned Floor Area (CFA)** of the dwelling unit, in square feet. When multi-family water heaters are *shared* by more than one dwelling unit, compliance must be based on the average of the square feet of the dwelling units served by each (different) shared water heater. Enter this average dwelling unit CFA here.

Heater Type Data

For each column, enter the heater number (e.g., "Heater #_1_ Data".) To identify which water heater on the plans matches these calculations.

A. Indicate the **Water Heater Type**. For a full listing of heater type descriptions and installation criteria, see Part 6.6. If the water heater is part of a hydronic system, see Part 6.5.

NOTE:

Oil-fired water heaters are considered gas water heaters for the purpose of the water heating calculations.

B. List the **Manufacturer**.
C. List the **Model No.**

The next set of values (lines D, E, F and G) must be taken from the Commission's listing of Certified Water Heaters.

D. Enter the **Energy Factor**. If Indirect Gas or Large Gas Storage water heater, leave blank.

E. Enter the actual capacity of the heater in **Gallons**.

F. For Instantaneous Gas heater type, enter **Pilot Btu/hr**.

G. For Instantaneous Gas heater type only, enter Thermal (**Recovery) Efficiency** (also used on form DHW-3).

H. Renewable energy sources such as solar or a wood stove are considered **Auxiliary Input** to the system. Indicate with a checkmark if either applies. For determining credit for these sources, see instructions for form DHW-4. For a full description of auxiliary inputs, see Part 6.6.

I. Indicate the **Distribution System**. For a full listing of distribution descriptions and installation criteria, see Part 6.6. If the distribution system is part of a hydronic system, see Part 6.5.

Energy Use Calculation

All values entered in lines 1a through 1d, lines 2a through 2c, and line 3 are in million Btu/year per dwelling unit (MBtu/yr-unit).

1a. Enter the **Standard Recovery Load** from Table 6-5 based on the total conditioned floor area of the dwelling unit.

1b. For a "Standard" distribution system, enter zero (0).

For other distribution system types, select **Distribution Credit** (+) or **Penalty** (-) from Table 6-6A or 6-6B based on standard recovery load (line 1a).

Pipe insulation credit can only be taken with non-recirculating systems and demand recirculating systems.

1c. If there is solar Auxiliary Input (line H), determine the **Solar Energy Credit** on form DHW-4 for active or passive solar systems (see DHW-4, line 1 or 9). Otherwise, enter zero (0).

1d. Subtract credits to calculate the **Adjusted Recovery Load** (subtract lines 1b and 1c from line 1a). Note that when line 1b is negative, line 1d increases.

2a. Based upon the Water Heater Type (line A), find the **Basic Energy Use** as follows:

Storage Gas	Table 6-7A
Storage Electric	Table 6-7B
Storage Heat Pump	Table 6-7C
Instantaneous Gas	Table 6-7D
Instantaneous Electric	Table 6-7D
Indirect Gas	DHW-3
Large Storage Gas	DHW-3

The tables use values listed on this worksheet such as Energy Factor (line D), Adjusted Recovery Load (line 1d), Pilot Btu/hr and Recovery Efficiency.

NOTE:

No interpolation is allowed in Table 6-7. Go into the rows and columns in those tables using the table values closest to the actual values.

2b. If there is a wood stove Auxiliary Input (line I), determine the **Wood Stove Boiler Credit** from form DHW-4 (line 10). Otherwise, enter zero (0).

2c. Subtract credits to calculate the **Proposed Energy Use** (subtract line 2b from line 2a).

Standard Energy Use

3. Find the **Standard Energy Use** from Table 6-5 using the total conditioned floor area of the dwelling unit. Enter the value on line 3.

4. In the prescriptive compliance approach (Chapter 3, Part 3.2), *the proposed water heating system complies if line 2c is less than or equal to line 3*.

DHW-2A, Water Heating for Single Family with Multiple Heaters

If you are completing the DHW-1 form for a single family unit with more than one water heater, you must also complete the DHW-2A form.

Title Block

- Enter **Project Title** and **Date**.

Single Family Project Data

1. Enter the **Number of different water heater types** (this may not necessarily be the same as the *total* number of water heaters in the building.)

2. Enter the **Total conditioned floor area** of the dwelling unit.

3a, 3b & 3c.
Enter the **Number of Heaters** for each **Heater Number**, **Manufacturer** and **Model Number** listed on DHW-1.

4. The **Total Number of Water Heaters** is the sum of lines 3a, 3b and 3c.

5. Enter the **Standard Recovery Load** from Table 6-5 based on line 2, total conditioned floor area.

6. Calculate and enter the **Recovery Load per heater**, which is line 5 divided by line 4. Enter this value on DHW-1, line 1a, for each heater type. Complete DHW-1 calculations through line 2c for each heater type.

7. Calculate and enter the **Proposed Energy Use** for **Heater #1**, which is DHW-1 Heater #1 line 2c times line 3a.

8. Calculate and enter the **Proposed Energy Use** for **Heater #2**, which is DHW-1 Heater #2 line 2c times line 3b.

9. Calculate and enter the **Proposed Energy Use** for **Heater #3**, which is DHW-1 Heater #3 line 2c times line 3c.

10. Calculate and enter the **Total Proposed Energy Use**, which is the sum of lines 7, 8 and 9.

11. Enter the **Standard Energy Use** from Table 6-5 using line 2, total conditioned floor area.

Compliance

12. In the prescriptive compliance approach (see Chapter 3), *the proposed water heating system complies if line 10 is equal to or less than line 11.*

DHW-2B, Water Heating for Multi-Family

Complete the DHW-2B form for any multi-family project. *The DHW-1 worksheet must also be completed whenever the DHW-2B form is submitted.*

Title Block

- Enter **Project Title** and **Date**.

Multi-Family Project Data

1. Enter the **Number of dwelling units**.

2. Enter the **Total conditioned floor area** of the building.

3. Calculate and enter the **Average floor area** per dwelling unit, which is line 2 divided by line 1.

4. Indicate which analytical method is used to calculate Proposed Energy Use: **Average Dwelling Unit** or **Individual Dwelling Unit**.

For "Individual Dwelling Unit" analysis, complete only lines 1 through 5, and attach a DHW-1 form with a Heater # for each individual unit.

5. Indicate which System configuration is being installed in the building: **Individual Heaters** (one per dwelling unit) or **Shared Heaters** (multiple dwelling units per heater).

   If Individual Heaters, follow instructions for lines 9a through 11a.

   If Shared Heater(s), complete lines 9b - 13b, and follow instructions on line 13b.

6a, 6b, 6c & 6d.
Enter the **Number of Heaters** for each **Heater Number**, **Manufacturer** and **Model Number** listed. For Individual Heaters, also enter the volume in **Gallons** for **Each** heater, and for the **Total** number of heaters of that type; enter the **Energy Factor** for **Each** heater, and the **Total** value (which is the number of heaters times the EF). Enter the Thermal (Recovery) Efficiency for each heater and the Total value (number of heaters time the Thermal Efficiency.

7a. Enter the **Total** number of heaters, which is the sum of lines 6a, 6b and 6c.

The following items (lines 7b, 7c, 7d, 8a and 8b) are calculated only for Individual Heaters.

7b. Enter the **Total** gallons of all heaters.

7c. Enter the **Total** of the Energy Factors.

7d Enter the **Total** of the Thermal Efficiencies.

8a. Calculate and enter the **Average** gallons per heater, which is line 7b divided by line 7a.

8b. Calculate and enter the **Average** Energy Factor per heater, which is line 7c divided by line 7a.

8c Calculate and enter the Average Thermal Efficiancy per heater, which is line 7d divided by line 7a.

Individual Heaters

9a. Transfer the value from line 8a to DHW-1 line E (gallons).

10a. Transfer the value from line 8b to DHW-1 line D (Energy Factor).

11a. Transfer the value from line 8c to DHW-1 line G (Thermal Efficiency)

12. Check compliance on DHW-1 for average dwelling unit and average water heater.

Shared Heater(s)

9b. Calculate and enter the **Average Unit Recovery Load**, which is DHW-1 line 1d.

10b. Calculate and enter the **Total Adjusted Recovery Load**, which is line 1 times line 9b.

11b. Enter the **Basic Energy Use** from Table 6-7, or from DHW-3 line 9 based on line 10b.

12b. Calculate and enter the **Average Unit Building Energy Use**, which is transferred from DHW-1 line 2a.

13b. Verify compliance on DHW-1 for average dwelling unit.

14. In the prescriptive compliance approach (see Chapter 3), *the proposed water heating system complies if DHW-1 line 2c is less than or equal to DHW-1 line 3*.

DHW-3, Large Storage Gas or Indirect Gas Worksheet

Complete the DHW-3 for any project that includes a large storage gas heater or an indirect gas heater (as explained in Part 6.6). *The DHW-1 worksheet must also be completed whenever the DHW-3 form is submitted.*

Title Block

- Enter **Project Title** and **Date**.

Indirect Gas Water Heaters

1. Enter the **Storage tank Manufacturer and Model Number.**

2. Enter the **Boiler or Instantaneous Water Heater Manufacturer and Model Number.**

3. Enter the **Storage tank insulation R-value**: The R-value integral with (internal to) the **Tank**; any **External** insulation R-value; and the **Total** of the two.

4. Enter the **Storage tank volume** in gallons.

5. Find the **Boiler AFUE or Instantaneous Water Heater Recovery Efficiency** in the appropriate appliance directory or database and enter on Line 5 in decimal fraction form (e.g., 0.78).

6. Enter the **Adjusted Recovery Load** on line 6 from DHW-1 Line 1d.

7. Using tank volume (Line 4) and Total R-Value (Line 5), determine **Jacket Loss** in MMBtu/yr from Table 6-7E and enter on line 7.

8. Enter **Pilot energy** (Btu/hr) from appliance directory or database on line 8. Enter zero (0) for no pilot, or 800 if pilot exists but energy use is not listed in the appliance database.

9. Using the equation listed, calculate Basic Energy Use and enter the value on line 9. Also enter the value on DHW-1 Line 2a or DHW-2B Line 11b.

Large Storage Gas Water Heaters (>75,000 Btuh Input)

1. Enter the **Water Heater Manufacturer.**

2. Enter the **Water Heater Model No.**

3. Enter the actual **Storage tank volume** in gallons from the Appliance database.

4. Enter the **Water Heater Thermal (Recovery) Efficiency** from the appliance database and enter on Line 5 in decimal fraction form (e.g. 0.78).

5. Enter the **Adjusted Recovery Load**, from DHW-1 Line 1d or from DHW-2B Line 10b, on Line 6.

6. Enter **Standby loss %** from the appliance database on line 8. (For example, enter "3.2" for 3.2 percent.)

7. Using the equation listed, calculate Basic Energy Use and enter the value on line 9. Also, enter the value on DHW-1 Line 2a or on DHW-2b Line 11b.

DHW-4, Auxiliary Input Worksheet

Complete the DHW-4 for any project that includes active solar, passive solar or a wood stove as an Auxiliary Input (as explained in Part 6.6).

Active Solar Credit

To receive credit for an active solar water heating system, it is necessary to calculate the solar contribution or Solar Fraction from an analysis by a certified version of the program called "f-Chart" (see Appendix F.)

Active solar credits are calculated on a "per dwelling unit" basis, and they include a 20 percent source energy adjustment for pumping and collector piping losses.

The f-Chart input parameters listed in Tables 6-8 and 6-10 are fixed for compliance. *Those fixed values must be used in all compliance calculations.*

1. Multiply:

   (Solar Fraction) x (Adjusted Recover Load) x (0.80)

   Where:

   Solar Fraction = "FDWH" from f-Chart; Adjusted Recovery Load is taken from DHW-1, line 1d.

The active solar credit calculated on line 1 is then entered on DHW-1, line 1c.

Passive Solar Credit

Passive solar water heating credits are derived from test results published by the Solar Rating and Certification Corporation (SRCC) in conjunction with climate zone specific weather data for California. (See Part 6.6 for information on obtaining SRCC data.)

Climate zone insolation data, used in calculating line 5 of the DHW-4 worksheet, is listed in Table 6-9.

Climate zone ambient air temperature and water main temperature data, used in calculating line 6 and line 7 of the DHW-4 worksheet, is listed in Table 6-10.

Line 8 is calculated only if the passive solar system uses electric resistance freeze protection.

The passive solar credit entered on DHW-1 line 1c cannot exceed the greater of the net recovery load which is line 1a minus line 1b on DHW-1, or 3 million Btu per year.

Wood Stove Boiler Credit

Internal wood stove boilers (WSBs) can supply the majority of daily water heating energy during the heating season. Some WSBs require a recirculating pump during wood stove operation.

Table 6-11 may be used to compute wood stove boiler credit with or without a recirculating pump. DHW-1 must be completed through line 2a before WSB credit is computed.

WSB credit factors in Table 6-11 vary by climate zone. A WSB credit is computed by multiplying the appropriate credit factor by DHW-1 line 2a (Basic Energy Use).

DHW-4 line 10 is entered on DHW-1 line 2b.

NOTE:

As tabulated in Table 6-11, the credit for WSBs with recirculating pumps is 90 percent of the credit without pumps based on a base case 85 watt pump applied to a 1700 ft^2 house and adjusted for electric source energy.

DHW-5, Combined Hydronic Space and Water Heating

Complete the DHW-5 for any project that includes a combined hydronic space and water heating system (as explained in Parts 6.5 and 8.9) to calculate the AFUE. The DHW-5 is also used to calculate the adjusted AFUE (accounting for pipe losses) when a space heating boiler is also used for water heating.

The DHW-1 worksheet must also be completed whenever the DHW-5 form is submitted.

If water heating is provided by a dedicated (separate) hydronic space heating system, complete the DHW-1 form only.

Storage Gas

1. Enter the **Recovery Efficiency, Thermal Efficiency, or Annual Fuel Utilization Efficiency (AFUE)** (decimal) of the water heater or boiler.

2. Enter the calculated **Average Hourly Pipe Loss**, from Line 8.

3. Enter the **Rated Input** of the water heater.

4. Determine the **Effective AFUE** of the system, by first dividing Line 2 by Line 3, then subtracting that value from Line 1. This value is used for prescriptive compliance.

Storage Electric

1. Enter the calculated **Average Hourly Pipe Loss**, from Line 8.

2. Enter the **Rated Input** of the water heater.

3. Enter the **Pump Watts** of the water heater and all other pumps associated with the system.

4. Calculate **Term A** from Lines 1 and 2. Multiply Line 2 by 3.413, then divide Line 1 by this value. Subtract the result from 1.

5. Calculate **Term B** from Lines 2 and 3. Multiply Line 3 by 1000, then divide Line 3 by this value, and add 1.

6. Calculate the **Effective HSPF (no fan)** by first dividing Line 4 by Line 5, then multiplying the result by 3.413. This value is used in the packages.

7. Calculate the **Effective HSPF (with fan)** by first dividing 1 by Line 6, then adding 0.005. Next divide the result into 1.017. This value is used in the packages.

Heat Pump

1. Enter the **Energy Factor** (decimal) of the water heater.

2. Enter the **Average Hourly Pipe Loss** from Line 8.

3. Enter the **Rated Input** of the water heater.

4. Determine the **Recovery Efficiency** of the water heater. Divide 1 by Line 1, then subtract 0.1175. Divide the result into 1.

5. Enter the **Climate Zone Adjustment** value from the table on the form.

6. Calculate the **Effective HSPF (no fan)** by first multiplying 3.413 by Line 3, then dividing this value into Line 2. Next subtract this value from the value resulting from dividing Line 4 by Line 5. Multiply this result by 3.413. This value is used in the packages.
7. Calculate the **Effective HSPF (with fan)** by first dividing 1 by Line 6, then adding 0.005. Next divide the result into 1.017. This value is used in the packages.

Pipe Loss Worksheet

1. Include **Description(s)** of any piping with more than 10 feet of pipe in unconditioned space between supply and distribution systems.

2. Enter **Pipe Loss Rate** for type(s) of pipe from table.

3. Enter the **Pipe Length** of each pipe outside conditioned space.

4. Calculate **Total Pipe Loss** by multiplying pipe loss rate by pipe length.

5. Total all pipe losses from 4.

8. Divide line 5 by 8760 to determine the **Average Hourly Pipe Loss (kBtu/hr)**, and enter on Line 8.

If the **Pipe Losses** section is not applicable (less than 10 feet of pipe in unconditioned space), enter a value of zero on Line 8.

Table 6-5: Standard Recovery Load and Standard Energy Use1

Floor Area	Standard Recovery Load	Standard Energy Use	Floor Area	Standard Recovery Load	Standard Energy Use
< 111	6.4	16.9	726 - 775	8.8	20.0
111 - 130	6.5	17.0	776 - 825	9.0	20.3
131 - 150	6.5	17.0	826 - 875	9.2	20.5
151 - 170	6.6	17.1	876 - 925	9.4	20.7
171 - 190	6.7	17.2	926 - 975	9.5	21.0
191 - 210	6.8	17.3	976 - 1050	9.8	21.3
211 - 230	6.8	17.4	1051 - 1150	10.1	21.7
231 - 250	6.9	17.5	1151 - 1250	10.5	22.2
251 - 270	7.0	17.6	1251 - 1350	10.9	22.7
271 - 290	7.1	17.7	1351 - 1450	11.3	23.2
291 - 310	7.1	17.8	1451 - 1550	11.6	23.6
311 - 330	7.2	17.9	1551 - 1650	12.0	24.1
331 - 350	7.3	18.0	1651 - 1750	12.4	24.6
351 - 370	7.3	18.1	1751 - 1850	12.8	25.1
371 - 390	7.4	18.2	1851 - 1950	13.2	25.6
391 - 410	7.5	18.3	1951 - 2050	13.6	26.1
411 - 430	7.6	18.4	2051 - 2150	14.0	26.6
431 - 450	7.6	18.5	2151 - 2250	14.4	27.0
451 - 470	7.7	18.6	2251 - 2350	14.8	27.5
471 - 490	7.8	18.7	2351 - 2500	15.3	28.1
491 - 525	7.9	18.8	> 2500	15.6	28.5
526 - 575	8.0	19.0			
576 - 625	8.2	19.3			
626 - 675	8.4	19.5			
676 - 726	8.6	19.8			

1. Based on Residential Water Heating Study (CEC Contract #400-88-003; ASHRAE Service Water Heating Design, 1993 ASHRAE Handbook of HVAC Systems and Applications

Table 6-6A Distribution System Credit/Penalty[1] for Single Family Dwellings (per worksheet)

Standard Recovery Load	POU	HWR	Pipe Insulation	Recirculation Systems				
				Time/Temp	Demand	Time	Temp	Cont
	0.82	0.82	0.92	0.96	0.98	1.28	1.05	1.52
< 6.3	1.1	1.1	0.5	0.3	0.1	-1.8	-0.3	-3.3
6.3 – 6.99	1.2	1.2	0.5	0.3	0.1	-1.8	-0.3	-3.4
7.0 – 7.49	1.3	1.3	0.6	0.3	0.1	-2.0	-0.4	-3.7
7.5 – 7.99	1.4	1.4	0.6	0.3	0.2	-2.2	-0.4	-4.0
8.0 – 8.49	1.5	1.5	0.7	0.3	0.2	-2.3	-0.4	-4.3
8.5 – 8.99	1.6	1.6	0.7	0.3	0.2	-2.4	-0.4	-4.5
9.0 – 9.49	1.7	1.7	0.7	0.4	0.2	-2.6	-0.5	-4.8
9.5 – 9.99	1.7	1.7	0.8	0.4	0.2	-2.7	-0.5	-5.0
10.0 - 10.99	1.8	1.8	0.8	0.4	0.2	-2.9	-0.5	-5.3
11.0 - 11.99	2.0	2.0	0.9	0.4	0.2	-3.1	-0.6	-5.8
12.0 - 12.99	2.2	2.2	1.0	0.5	0.2	-3.4	-0.6	-6.3
13.0 - 13.99	2.4	2.4	1.1	0.5	0.3	-3.7	-0.7	-6.9
14.0 - 15.99	2.6	2.6	1.1	0.6	0.3	-4.0	-0.7	-7.4
16.0 - 17.99	2.9	2.9	1.3	0.6	0.3	-4.5	-0.8	-8.4
18.0 - 19.99	3.3	3.3	1.5	0.7	0.4	-5.1	-0.9	-9.5
20.0 - 21.99	3.6	3.6	1.6	0.8	0.4	-5.7	-1.0	-10.5
22.0 - 23.99	4.0	4.0	1.8	0.9	0.4	-6.2	-1.1	-11.5
24.0 - 25.99	4.4	4.4	1.9	1.0	0.5	-6.8	-1.2	-12.6
26.0+	4.8	4.8	2.1	1.1	0.5	-7.4	-1.3	-13.7

Table 6-6B Distribution System Credit/Penalty[1] for Multi Family Dwellings (per worksheet)

Standard Recovery Load	POU	HWR	Pipe Insulation	Recirculation Systems				
				Time/Temp	Demand	Time	Temp	Cont
	1	1	0.92	1.52	1.52	1.52	1.05	1.52
< 6.3	0.0	0.0	0.5	-3.3	-3.3	-3.3	-0.3	-3.3
6.3 - 6.99	0.0	0.0	0.5	-3.4	-3.4	-3.4	-0.3	-3.4
7.0 - 7.49	0.0	0.0	0.6	-3.7	-3.7	-3.7	-0.4	-3.7
7.5 - 7.99	0.0	0.0	0.6	-4.0	-4.0	-4.0	-0.4	-4.0
8.0 - 8.49	0.0	0.0	0.7	-4.3	-4.3	-4.3	-0.4	-4.3
8.5 - 8.99	0.0	0.0	0.7	-4.5	-4.5	-4.5	-0.4	-4.5
9.0 - 9.49	0.0	0.0	0.7	-4.8	-4.8	-4.8	-0.5	-4.8
9.5 - 9.99	0.0	0.0	0.8	-5.0	-5.0	-5.0	-0.5	-5.0
10.0 - 10.99	0.0	0.0	0.8	-5.3	-5.3	-5.3	-0.5	-5.3
11.0 - 11.99	0.0	0.0	0.9	-5.8	-5.8	-5.8	-0.6	-5.8
12.0 - 12.99	0.0	0.0	1.0	-6.3	-6.3	-6.3	-0.6	-6.3
13.0 - 13.99	0.0	0.0	1.1	-6.9	-6.9	-6.9	-0.7	-6.9
14.0 - 15.99	0.0	0.0	1.1	-7.4	-7.4	-7.4	-0.7	-7.4
16.0 - 17.99	0.0	0.0	1.3	-8.4	-8.4	-8.4	-0.8	-8.4
18.0 - 19.99	0.0	0.0	1.5	-9.5	-9.5	-9.5	-0.9	-9.5
20.0 - 21.99	0.0	0.0	1.6	-10.5	-10.5	-10.5	-1.0	-10.5
22.0 - 23.99	0.0	0.0	1.8	-11.5	-11.5	-11.5	-1.1	-11.5
24.0 - 25.99	0.0	0.0	1.9	-12.6	-12.6	-12.6	-1.2	-12.6
26.0+	0.0	0.0	2.1	-13.7	-13.7	-13.7	-1.3	-13.7

1. Hot water recovery and pipe insulation credits may only be applied to non-recirculating systems and demand recirculating systems. All other recirculating systems must have pipe insulation as explained in Part 6.6.

Table 6-7A: Basic Energy Use (BEU) - Storage Gas Heater [no interpolation]

Ajusted Recoery Load	Energy Factor																						
	0.45	0.46	0.47	0.48	0.49	0.50	0.51	0.52	0.53	0.54	0.55	0.56	0.57	0.58	0.60	0.62	0.64	0.66	0.68	0.70	0.74	0.78	0.82
3.0	19.9	18.5	17.3	16.2	15.3	14.4	13.7	13.0	12.4	11.8	11.3	10.8	10.4	10.0	9.3	8.7	8.1	7.7	7.2	6.8	6.2	5.7	5.2
3.2	19.6	18.3	17.2	16.2	15.3	14.5	13.8	13.1	12.6	12.0	11.5	11.1	10.6	10.3	9.6	8.9	8.4	7.9	7.5	7.1	6.5	5.9	5.5
3.4	19.4	18.2	17.2	16.2	15.4	14.6	14.0	13.3	12.8	12.2	11.8	11.3	10.9	10.5	9.8	9.2	8.7	8.2	7.8	7.4	6.7	6.2	5.7
3.6	19.3	18.2	17.2	16.3	15.5	14.8	14.2	13.6	13.0	12.5	12.0	11.6	11.2	10.8	10.1	9.5	9.0	8.5	8.1	7.7	7.0	6.4	5.9
3.8	19.3	18.2	17.3	16.5	15.7	15.0	14.4	13.8	13.2	12.7	12.3	11.8	11.4	11.1	10.4	9.8	9.2	8.8	8.3	7.9	7.3	6.7	6.2
4.0	19.3	18.3	17.4	16.6	15.9	15.2	14.6	14.0	13.5	13.0	12.5	12.1	11.7	11.3	10.7	10.1	9.5	9.0	8.6	8.2	7.5	6.9	6.4
4.2	19.4	18.4	17.6	16.8	16.1	15.4	14.8	14.2	13.7	13.2	12.8	12.4	12.0	11.6	10.9	10.3	9.8	9.3	8.9	8.5	7.8	7.2	6.7
4.4	19.5	18.6	17.7	17.0	16.3	15.6	15.0	14.5	14.0	13.5	13.1	12.6	12.3	11.9	11.2	10.6	10.1	9.6	9.1	8.7	8.0	7.4	6.9
4.6	19.6	18.7	17.9	17.2	16.5	15.9	15.3	14.7	14.2	13.8	13.3	12.9	12.5	12.2	11.5	10.9	10.3	9.8	9.4	9.0	8.3	7.7	7.1
4.8	19.8	18.9	18.1	17.4	16.7	16.1	15.5	15.0	14.5	14.0	13.6	13.2	12.8	12.4	11.8	11.2	10.6	10.1	9.7	9.3	8.5	7.9	7.4
5.0	19.9	19.1	18.3	17.6	17.0	16.4	15.8	15.3	14.8	14.3	13.9	13.5	13.1	12.7	12.0	11.4	10.9	10.4	9.9	9.5	8.8	8.1	7.6
5.2	20.1	19.3	18.5	17.8	17.2	16.6	16.0	15.5	15.0	14.6	14.1	13.7	13.3	13.0	12.3	11.7	11.1	10.6	10.2	9.8	9.0	8.4	7.8
5.4	20.3	19.5	18.8	18.1	17.4	16.9	16.3	15.8	15.3	14.8	14.4	14.0	13.6	13.2	12.6	12.0	11.4	10.9	10.4	10.0	9.3	8.6	8.1
5.6	20.5	19.7	19.0	18.3	17.7	17.1	16.6	16.0	15.6	15.1	14.7	14.3	13.9	13.5	12.8	12.2	11.7	11.2	10.7	10.3	9.5	8.9	8.3
5.8	20.7	19.9	19.2	18.6	17.9	17.4	16.8	16.3	15.8	15.4	14.9	14.5	14.1	13.8	13.1	12.5	11.9	11.4	11.0	10.5	9.8	9.1	8.5
6.0	20.9	20.2	19.5	18.8	18.2	17.6	17.1	16.6	16.1	15.6	15.2	14.8	14.4	14.0	13.4	12.8	12.2	11.7	11.2	10.8	10.0	9.3	8.7
6.2	21.2	20.4	19.7	19.1	18.4	17.9	17.3	16.8	16.3	15.9	15.5	15.1	14.7	14.3	13.6	13.0	12.5	11.9	11.5	11.0	10.2	9.6	9.0
6.4	21.4	20.6	20.0	19.3	18.7	18.1	17.6	17.1	16.6	16.2	15.7	15.3	14.9	14.6	13.9	13.3	12.7	12.2	11.7	11.3	10.5	9.8	9.2
6.6	21.6	20.9	20.2	19.6	19.0	18.4	17.9	17.4	16.9	16.4	16.0	15.6	15.2	14.8	14.2	13.5	13.0	12.4	12.0	11.5	10.7	10.0	9.4
6.8	21.9	21.1	20.5	19.8	19.2	18.7	18.1	17.6	17.1	16.7	16.3	15.9	15.5	15.1	14.4	13.8	13.2	12.7	12.2	11.8	10.9	10.2	9.6
7.0	22.1	21.4	20.7	20.1	19.5	18.9	18.4	17.9	17.4	17.0	16.5	16.1	15.7	15.4	14.7	14.1	13.5	12.9	12.5	12.0	11.2	10.5	9.8
7.2	22.3	21.6	21.0	20.3	19.7	19.2	18.6	18.1	17.7	17.2	16.8	16.4	16.0	15.6	14.9	14.3	13.7	13.2	12.7	12.2	11.4	10.7	10.1
7.4	22.6	21.9	21.2	20.6	20.0	19.4	18.9	18.4	17.9	17.5	17.1	16.7	16.3	15.9	15.2	14.6	14.0	13.4	12.9	12.5	11.6	10.9	10.3
7.6	22.8	22.1	21.5	20.8	20.3	19.7	19.2	18.7	18.2	17.8	17.3	16.9	16.5	16.2	15.5	14.8	14.2	13.7	13.2	12.7	11.9	11.1	10.5
7.8	23.1	22.4	21.7	21.1	20.5	20.0	19.4	18.9	18.5	18.0	17.6	17.2	16.8	16.4	15.7	15.1	14.5	13.9	13.4	13.0	12.1	11.4	10.7
8.0	23.3	22.6	22.0	21.4	20.8	20.2	19.7	19.2	18.7	18.3	17.8	17.4	17.0	16.7	16.0	15.3	14.7	14.2	13.7	13.2	12.3	11.6	10.9
8.2	23.6	22.9	22.2	21.6	21.0	20.5	20.0	19.5	19.0	18.5	18.1	17.7	17.3	16.9	16.2	15.6	15.0	14.4	13.9	13.4	12.6	11.8	11.1
8.4	23.8	23.1	22.5	21.9	21.3	20.7	20.2	19.7	19.3	18.8	18.4	18.0	17.6	17.2	16.5	15.8	15.2	14.7	14.2	13.7	12.8	12.0	11.3
8.6	24.1	23.4	22.8	22.1	21.6	21.0	20.5	20.0	19.5	19.1	18.6	18.2	17.8	17.4	16.7	16.1	15.5	14.9	14.4	13.9	13.0	12.2	11.6
8.8	24.3	23.7	23.0	22.4	21.8	21.3	20.7	20.2	19.8	19.3	18.9	18.5	18.1	17.7	17.0	16.3	15.7	15.2	14.6	14.1	13.2	12.5	11.8
9.0	24.6	23.9	23.3	22.7	22.1	21.5	21.0	20.5	20.0	19.6	19.1	18.7	18.3	18.0	17.2	16.6	16.0	15.4	14.9	14.4	13.5	12.7	12.0
9.2	24.8	24.2	23.5	22.9	22.3	21.8	21.3	20.8	20.3	19.8	19.4	19.0	18.6	18.2	17.5	16.8	16.2	15.6	15.1	14.6	13.7	12.9	12.2
9.4	25.1	24.4	23.8	23.2	22.6	22.0	21.5	21.0	20.5	20.1	19.7	19.2	18.8	18.5	17.7	17.1	16.4	15.9	15.3	14.8	13.9	13.1	12.4
9.6	25.4	24.7	24.0	23.4	22.9	22.3	21.8	21.3	20.8	20.3	19.9	19.5	19.1	18.7	18.0	17.3	16.7	16.1	15.6	15.1	14.1	13.3	12.6
9.8	25.6	24.9	24.3	23.7	23.1	22.6	22.0	21.5	21.1	20.6	20.2	19.7	19.3	19.0	18.2	17.6	16.9	16.3	15.8	15.3	14.4	13.5	12.8
10.0	25.9	25.2	24.6	23.9	23.4	22.8	22.3	21.8	21.3	20.9	20.4	20.0	19.6	19.2	18.5	17.8	17.2	16.6	16.0	15.5	14.6	13.8	13.0
10.5	26.5	25.8	25.2	24.6	24.0	23.5	22.9	22.4	22.0	21.5	21.0	20.6	20.2	19.8	19.1	18.4	17.8	17.2	16.6	16.1	15.1	14.3	13.5
11.0	27.1	26.5	25.8	25.2	24.7	24.1	23.6	23.1	22.6	22.1	21.7	21.2	20.8	20.4	19.7	19.0	18.4	17.7	17.2	16.6	15.7	14.8	14.0
11.5	27.8	27.1	26.5	25.9	25.3	24.7	24.2	23.7	23.2	22.7	22.3	21.9	21.5	21.1	20.3	19.6	18.9	18.3	17.7	17.2	16.2	15.3	14.5
12.0	28.4	27.7	27.1	26.5	25.9	25.4	24.8	24.3	23.8	23.4	22.9	22.5	22.1	21.7	20.9	20.2	19.5	18.9	18.3	17.8	16.8	15.9	15.1
12.5	29.0	28.4	27.7	27.1	26.6	26.0	25.5	25.0	24.5	24.0	23.5	23.1	22.7	22.3	21.5	20.8	20.1	19.5	18.9	18.3	17.3	16.4	15.6
13.0	29.7	29.0	28.4	27.8	27.2	26.6	26.1	25.6	25.1	24.6	24.1	23.7	23.3	22.9	22.1	21.3	20.7	20.0	19.4	18.9	17.8	16.9	16.0
13.5	30.3	29.6	29.0	28.4	27.8	27.2	26.7	26.2	25.7	25.2	24.7	24.3	23.9	23.5	22.7	21.9	21.2	20.6	20.0	19.4	18.3	17.4	16.5
14.0	30.9	30.3	29.6	29.0	28.4	27.9	27.3	26.8	26.3	25.8	25.3	24.9	24.5	24.0	23.2	22.5	21.8	21.1	20.5	19.9	18.9	17.9	17.0
14.5	31.6	30.9	30.3	29.6	29.0	28.5	27.9	27.4	26.9	26.4	25.9	25.5	25.1	24.6	23.8	23.1	22.4	21.7	21.1	20.5	19.4	18.4	17.5
15.0	32.2	31.5	30.9	30.3	29.7	29.1	28.5	28.0	27.5	27.0	26.5	26.1	25.6	25.2	24.4	23.6	22.9	22.2	21.6	21.0	19.9	18.9	18.0
15.5	32.8	32.1	31.5	30.9	30.3	29.7	29.1	28.6	28.1	27.6	27.1	26.7	26.2	25.8	25.0	24.2	23.5	22.8	22.2	21.5	20.4	19.4	18.5
16.0	33.4	32.7	32.1	31.5	30.9	30.3	29.8	29.2	28.7	28.2	27.7	27.3	26.8	26.4	25.5	24.8	24.0	23.3	22.7	22.1	20.9	19.9	19.0
16.5	34.0	33.4	32.7	32.1	31.5	30.9	30.3	29.8	29.3	28.8	28.3	27.8	27.4	26.9	26.1	25.3	24.6	23.9	23.2	22.6	21.4	20.4	19.5
17.0	34.7	34.0	33.3	32.7	32.1	31.5	30.9	30.4	29.9	29.4	28.9	28.4	28.0	27.5	26.7	25.9	25.1	24.4	23.8	23.1	22.0	20.9	19.9
17.5	35.3	34.6	33.9	33.3	32.7	32.1	31.5	31.0	30.5	30.0	29.5	29.0	28.5	28.1	27.2	26.4	25.7	25.0	24.3	23.6	22.5	21.4	20.4
18.0	35.9	35.2	34.5	33.9	33.3	32.7	32.1	31.6	31.1	30.5	30.0	29.6	29.1	28.6	27.8	27.0	26.2	25.5	24.8	24.2	23.0	21.9	20.9
18.5	36.5	35.8	35.1	34.5	33.9	33.3	32.7	32.2	31.6	31.1	30.6	30.1	29.7	29.2	28.3	27.5	26.8	26.0	25.3	24.7	23.5	22.4	21.4
19.0	37.1	36.4	35.7	35.1	34.5	33.9	33.3	32.8	32.2	31.7	31.2	30.7	30.2	29.8	28.9	28.1	27.3	26.5	25.8	25.2	24.0	22.8	21.8
19.5	37.7	37.0	36.3	35.7	35.1	34.5	33.9	33.3	32.8	32.3	31.8	31.3	30.8	30.3	29.4	28.6	27.8	27.1	26.4	25.7	24.5	23.3	22.3
20.0	38.3	37.6	36.9	36.3	35.7	35.1	34.5	33.9	33.4	32.8	32.3	31.8	31.3	30.9	30.0	29.1	28.4	27.6	26.9	26.2	24.9	23.8	22.8
21.0	39.5	38.8	38.1	37.4	36.8	36.2	35.6	35.1	34.5	34.0	33.4	32.9	32.5	32.0	31.1	30.2	29.4	28.6	27.9	27.2	25.9	24.8	23.7
22.0	40.7	40.0	39.3	38.6	38.0	37.4	36.8	36.2	35.6	35.1	34.6	34.1	33.6	33.1	32.2	31.3	30.5	29.7	28.9	28.2	26.9	25.7	24.6

Table 6-7B: Basic Energy Use (BEU) – Storage Electric Heater [no interpolation]

Ajusted Recoery Load	Energy Factor																							
	0.77	0.78	0.79	0.80	0.81	0.82	0.83	0.84	0.85	0.86	0.87	0.88	0.89	0.90	0.91	0.92	0.93	0.94	0.95	0.96	0.97	0.98	0.99
3.0	22.4	21.1	20.0	19.0	18.1	17.2	16.5	15.8	15.2	14.6	14.0	13.5	13.0	12.6	12.2	11.8	11.5	11.1	10.8	10.5	10.2	9.9	9.7
3.2	23.0	21.8	20.7	19.7	18.8	18.0	17.2	16.5	15.9	15.3	14.7	14.2	13.8	13.3	12.9	12.5	12.1	11.8	11.5	11.1	10.8	10.6	10.3
3.4	23.6	22.4	21.3	20.4	19.5	18.7	17.9	17.2	16.6	16.0	15.4	14.9	14.4	14.0	13.6	13.2	12.8	12.4	12.1	11.8	11.5	11.2	10.9
3.6	24.2	23.1	22.0	21.1	20.2	19.4	18.6	17.9	17.3	16.7	16.1	15.6	15.1	14.7	14.2	13.8	13.5	13.1	12.7	12.4	12.1	11.8	11.5
3.8	24.8	23.7	22.7	21.7	20.9	20.1	19.3	18.6	18.0	17.4	16.8	16.3	15.8	15.4	14.9	14.5	14.1	13.7	13.4	13.1	12.7	12.4	12.1
4.0	25.5	24.4	23.3	22.4	21.6	20.8	20.0	19.3	18.7	18.1	17.5	17.0	16.5	16.0	15.6	15.2	14.8	14.4	14.0	13.7	13.4	13.1	12.8
4.2	26.1	25.0	24.0	23.1	22.2	21.4	20.7	20.0	19.4	18.8	18.2	17.7	17.2	16.7	16.3	15.8	15.4	15.0	14.7	14.3	14.0	13.7	13.4
4.4	26.7	25.6	24.7	23.8	22.9	22.1	21.4	20.7	20.1	19.5	18.9	18.4	17.8	17.4	16.9	16.5	16.1	15.7	15.3	15.0	14.6	14.3	14.0
4.6	27.3	26.3	25.3	24.4	23.6	22.8	22.1	21.4	20.7	20.1	19.6	19.0	18.5	18.0	17.6	17.1	16.7	16.3	15.9	15.6	15.2	14.9	14.6
4.8	28.0	26.9	26.0	25.1	24.3	23.5	22.7	22.1	21.4	20.8	20.2	19.7	19.2	18.7	18.2	17.8	17.4	17.0	16.6	16.2	15.9	15.5	15.2
5.0	28.6	27.6	26.6	25.7	24.9	24.1	23.4	22.7	22.1	21.5	20.9	20.4	19.8	19.3	18.9	18.4	18.0	17.6	17.2	16.8	16.5	16.1	15.8
5.2	29.2	28.2	27.3	26.4	25.6	24.8	24.1	23.4	22.7	22.1	21.6	21.0	20.5	20.0	19.5	19.1	18.6	18.2	17.8	17.5	17.1	16.7	16.4
5.4	29.8	28.8	27.9	27.0	26.2	25.5	24.7	24.1	23.4	22.8	22.2	21.7	21.1	20.6	20.2	19.7	19.3	18.9	18.5	18.1	17.7	17.4	17.0
5.6	30.4	29.5	28.5	27.7	26.9	26.1	25.4	24.7	24.1	23.5	22.9	22.3	21.8	21.3	20.8	20.3	19.9	19.5	19.1	18.7	18.3	18.0	17.6
5.8	31.0	30.1	29.2	28.3	27.5	26.8	26.0	25.4	24.7	24.1	23.5	23.0	22.4	21.9	21.4	21.0	20.5	20.1	19.7	19.3	18.9	18.6	18.2
6.0	31.6	30.7	29.8	29.0	28.2	27.4	26.7	26.0	25.4	24.7	24.2	23.6	23.1	22.6	22.1	21.6	21.2	20.7	20.3	19.9	19.5	19.2	18.8
6.2	32.3	31.3	30.4	29.6	28.8	28.0	27.3	26.7	26.0	25.4	24.8	24.2	23.7	23.2	22.7	22.2	21.8	21.4	20.9	20.5	20.2	19.8	19.4
6.4	32.9	31.9	31.1	30.2	29.4	28.7	28.0	27.3	26.6	26.0	25.4	24.9	24.3	23.8	23.3	22.9	22.4	22.0	21.6	21.2	20.8	20.4	20.0
6.6	33.5	32.5	31.7	30.8	30.1	29.3	28.6	27.9	27.3	26.7	26.1	25.5	25.0	24.5	24.0	23.5	23.0	22.6	22.2	21.8	21.4	21.0	20.6
6.8	34.1	33.2	32.3	31.5	30.7	29.9	29.2	28.6	27.9	27.3	26.7	26.2	25.6	25.1	24.6	24.1	23.7	23.2	22.8	22.4	22.0	21.6	21.2
7.0	34.7	33.8	32.9	32.1	31.3	30.6	29.9	29.2	28.6	27.9	27.3	26.8	26.2	25.7	25.2	24.7	24.3	23.8	23.4	23.0	22.6	22.2	21.8
7.2	35.3	34.4	33.5	32.7	31.9	31.2	30.5	29.8	29.2	28.6	28.0	27.4	26.9	26.3	25.8	25.4	24.9	24.4	24.0	23.6	23.2	22.8	22.4
7.4	35.9	35.0	34.1	33.3	32.6	31.8	31.1	30.5	29.8	29.2	28.6	28.0	27.5	27.0	26.5	26.0	25.5	25.1	24.6	24.2	23.8	23.4	23.0
7.6	36.5	35.6	34.7	33.9	33.2	32.4	31.7	31.1	30.4	29.8	29.2	28.7	28.1	27.6	27.1	26.6	26.1	25.7	25.2	24.8	24.4	24.0	23.6
7.8	37.0	36.2	35.3	34.5	33.8	33.1	32.4	31.7	31.1	30.4	29.8	29.3	28.7	28.2	27.7	27.2	26.7	26.3	25.8	25.4	25.0	24.6	24.2
8.0	37.6	36.8	35.9	35.2	34.4	33.7	33.0	32.3	31.7	31.1	30.5	29.9	29.4	28.8	28.3	27.8	27.3	26.9	26.4	26.0	25.6	25.2	24.8
8.2	38.2	37.4	36.5	35.8	35.0	34.3	33.6	32.9	32.3	31.7	31.1	30.5	30.0	29.4	28.9	28.4	28.0	27.5	27.0	26.6	26.2	25.8	25.4
8.4	38.8	37.9	37.1	36.4	35.6	34.9	34.2	33.5	32.9	32.3	31.7	31.1	30.6	30.0	29.5	29.0	28.6	28.1	27.7	27.2	26.8	26.4	26.0
8.6	39.4	38.5	37.7	37.0	36.2	35.5	34.8	34.2	33.5	32.9	32.3	31.7	31.2	30.7	30.1	29.7	29.2	28.7	28.3	27.8	27.4	27.0	26.6
8.8	40.0	39.1	38.3	37.6	36.8	36.1	35.4	34.8	34.1	33.5	32.9	32.4	31.8	31.3	30.8	30.3	29.8	29.3	28.9	28.4	28.0	27.6	27.2
9.0	40.5	39.7	38.9	38.1	37.4	36.7	36.0	35.4	34.7	34.1	33.5	33.0	32.4	31.9	31.4	30.9	30.4	29.9	29.5	29.0	28.6	28.2	27.8
9.2	41.1	40.3	39.5	38.7	38.0	37.3	36.6	36.0	35.3	34.7	34.1	33.6	33.0	32.5	32.0	31.5	31.0	30.5	30.1	29.6	29.2	28.8	28.4
9.4	41.7	40.9	40.1	39.3	38.6	37.9	37.2	36.6	35.9	35.3	34.7	34.2	33.6	33.1	32.6	32.1	31.6	31.1	30.7	30.2	29.8	29.4	29.0
9.6	42.3	41.4	40.7	39.9	39.2	38.5	37.8	37.2	36.5	35.9	35.3	34.8	34.2	33.7	33.2	32.7	32.2	31.7	31.3	30.8	30.4	30.0	29.5
9.8	42.8	42.0	41.2	40.5	39.8	39.1	38.4	37.8	37.1	36.5	35.9	35.4	34.8	34.3	33.8	33.3	32.8	32.3	31.9	31.4	31.0	30.5	30.1
10.0	43.4	42.6	41.8	41.1	40.4	39.7	39.0	38.4	37.7	37.1	36.5	36.0	35.4	34.9	34.4	33.9	33.4	32.9	32.4	32.0	31.6	31.1	30.7
10.5	44.8	44.0	43.3	42.5	41.8	41.1	40.5	39.8	39.2	38.6	38.0	37.5	36.9	36.4	35.9	35.4	34.9	34.4	33.9	33.5	33.0	32.6	32.2
11.0	46.2	45.4	44.7	44.0	43.3	42.6	41.9	41.3	40.7	40.1	39.5	39.0	38.4	37.9	37.4	36.8	36.4	35.9	35.4	35.0	34.5	34.1	33.7
11.5	47.6	46.8	46.1	45.4	44.7	44.0	43.4	42.8	42.2	41.6	41.0	40.4	39.9	39.3	38.8	38.3	37.8	37.4	36.9	36.4	36.0	35.6	35.1
12.0	49.0	48.2	47.5	46.8	46.1	45.5	44.8	44.2	43.6	43.0	42.5	41.9	41.3	40.8	40.3	39.8	39.3	38.8	38.4	37.9	37.5	37.0	36.6
12.5	50.3	49.6	48.9	48.2	47.6	46.9	46.3	45.7	45.1	44.5	43.9	43.4	42.8	42.3	41.8	41.3	40.8	40.3	39.8	39.4	38.9	38.5	38.1
13.0	51.7	51.0	50.3	49.6	49.0	48.3	47.7	47.1	46.5	45.9	45.4	44.8	44.3	43.7	43.2	42.7	42.2	41.8	41.3	40.8	40.4	40.0	39.5
13.5	53.1	52.4	51.7	51.0	50.4	49.7	49.1	48.5	47.9	47.3	46.8	46.2	45.7	45.2	44.7	44.2	43.7	43.2	42.8	42.3	41.8	41.4	41.0
14.0	54.4	53.7	53.0	52.4	51.7	51.1	50.5	49.9	49.3	48.8	48.2	47.7	47.2	46.6	46.1	45.6	45.1	44.7	44.2	43.8	43.3	42.9	42.4
14.5	55.7	55.1	54.4	53.8	53.1	52.5	51.9	51.3	50.8	50.2	49.6	49.1	48.6	48.1	47.6	47.1	46.6	46.1	45.7	45.2	44.8	44.3	43.9
15.0	57.1	56.4	55.7	55.1	54.5	53.9	53.3	52.7	52.2	51.6	51.1	50.5	50.0	49.5	49.0	48.5	48.0	47.6	47.1	46.7	46.2	45.8	45.3
15.5	58.4	57.7	57.1	56.5	55.9	55.3	54.7	54.1	53.6	53.0	52.5	52.0	51.4	50.9	50.4	50.0	49.5	49.0	48.5	48.1	47.7	47.2	46.8
16.0	59.7	59.1	58.4	57.8	57.2	56.6	56.1	55.5	54.9	54.4	53.9	53.4	52.9	52.4	51.9	51.4	50.9	50.4	50.0	49.5	49.1	48.7	48.2
16.5	61.0	60.4	59.8	59.2	58.6	58.0	57.4	56.9	56.3	55.8	55.3	54.8	54.3	53.8	53.3	52.8	52.3	51.9	51.4	51.0	50.5	50.1	49.7
17.0	62.3	61.7	61.1	60.5	59.9	59.4	58.8	58.3	57.7	57.2	56.7	56.2	55.7	55.2	54.7	54.2	53.8	53.3	52.9	52.4	52.0	51.6	51.1
17.5	63.6	63.0	62.4	61.8	61.3	60.7	60.2	59.6	59.1	58.6	58.1	57.6	57.1	56.6	56.1	55.6	55.2	54.7	54.3	53.9	53.4	53.0	52.6
18.0	64.9	64.3	63.7	63.1	62.6	62.0	61.5	61.0	60.5	59.9	59.4	59.0	58.5	58.0	57.5	57.1	56.6	56.2	55.7	55.3	54.9	54.4	54.0
18.5	66.1	65.6	65.0	64.5	63.9	63.4	62.8	62.3	61.8	61.3	60.8	60.3	59.9	59.4	58.9	58.5	58.0	57.6	57.1	56.7	56.3	55.9	55.5
19.0	67.4	66.9	66.3	65.8	65.2	64.7	64.2	63.7	63.2	62.7	62.2	61.7	61.2	60.8	60.3	59.9	59.4	59.0	58.6	58.1	57.7	57.3	56.9
19.5	68.7	68.1	67.6	67.1	66.5	66.0	65.5	65.0	64.5	64.0	63.6	63.1	62.6	62.2	61.7	61.3	60.8	60.4	60.0	59.6	59.2	58.7	58.3
20.0	70.0	69.4	68.9	68.4	67.9	67.3	66.8	66.4	65.9	65.4	64.9	64.5	64.0	63.6	63.1	62.7	62.3	61.8	61.4	61.0	60.6	60.2	59.8
21.0	72.5	71.9	71.4	70.9	70.5	70.0	69.5	69.0	68.6	68.1	67.6	67.2	66.8	66.3	65.9	65.5	65.1	64.6	64.2	63.8	63.4	63.0	62.7
22.0	74.9	74.5	74.0	73.5	73.0	72.6	72.1	71.7	71.2	70.8	70.3	69.9	69.5	69.1	68.7	68.2	67.8	67.4	67.1	66.7	66.3	65.9	65.5

Table 6-7C: Basic Energy Use (BEU)_- Storage Heat Pump Heater [no interpolation]

Adjusted Recoery Load	Energy Factor																				
	1.8	1.9	2.0	2.1	2.2	2.3	2.4	2.5	2.6	2.7	2.8	2.9	3.0	3.1	3.2	3.3	3.4	3.5	3.6	3.7	3.8
6.0	14.1	13.5	13.0	12.6	12.1	11.7	11.3	11.0	10.6	10.3	10.0	9.7	9.5	9.2	9.0	8.7	8.5	8.3	8.1	7.9	7.8
6.2	14.4	13.8	13.3	12.8	12.3	11.9	11.5	11.1	10.8	10.5	10.2	9.9	9.6	9.3	9.1	8.9	8.7	8.4	8.2	8.0	7.9
6.4	14.7	14.1	13.5	13.0	12.5	12.1	11.7	11.3	11.0	10.6	10.3	10.0	9.7	9.5	9.2	9.0	8.8	8.6	8.3	8.2	8.0
6.6	14.9	14.3	13.8	13.2	12.8	12.3	11.9	11.5	11.1	10.8	10.5	10.2	9.9	9.6	9.4	9.1	8.9	8.7	8.5	8.3	8.1
6.8	15.2	14.6	14.0	13.5	13.0	12.5	12.1	11.7	11.3	11.0	10.6	10.3	10.0	9.8	9.5	9.3	9.0	8.8	8.6	8.4	8.2
7.0	15.5	14.8	14.2	13.7	13.2	12.7	12.3	11.9	11.5	11.1	10.8	10.5	10.2	9.9	9.6	9.4	9.1	8.9	8.7	8.5	8.3
7.2	15.8	15.1	14.5	13.9	13.4	12.9	12.5	12.1	11.7	11.3	11.0	10.6	10.3	10.0	9.8	9.5	9.3	9.0	8.8	8.6	8.4
7.4	16.0	15.4	14.7	14.2	13.6	13.1	12.7	12.2	11.8	11.5	11.1	10.8	10.5	10.2	9.9	9.6	9.4	9.1	8.9	8.7	8.5
7.6	16.3	15.6	15.0	14.4	13.8	13.3	12.9	12.4	12.0	11.6	11.3	10.9	10.6	10.3	10.0	9.8	9.5	9.3	9.0	8.8	8.6
7.8	16.6	15.9	15.2	14.6	14.0	13.5	13.0	12.6	12.2	11.8	11.4	11.1	10.8	10.5	10.2	9.9	9.6	9.4	9.2	8.9	8.7
8.0	16.8	16.1	15.4	14.8	14.3	13.7	13.2	12.8	12.4	12.0	11.6	11.2	10.9	10.6	10.3	10.0	9.8	9.5	9.3	9.0	8.8
8.2	17.1	16.4	15.7	15.0	14.5	13.9	13.4	13.0	12.5	12.1	11.7	11.4	11.0	10.7	10.4	10.1	9.9	9.6	9.4	9.2	8.9
8.4	17.4	16.6	15.9	15.3	14.7	14.1	13.6	13.1	12.7	12.3	11.9	11.5	11.2	10.9	10.6	10.3	10.0	9.7	9.5	9.3	9.0
8.6	17.7	16.9	16.1	15.5	14.9	14.3	13.8	13.3	12.9	12.4	12.0	11.7	11.3	11.0	10.7	10.4	10.1	9.9	9.6	9.4	9.1
8.8	17.9	17.1	16.4	15.7	15.1	14.5	14.0	13.5	13.0	12.6	12.2	11.8	11.5	11.1	10.8	10.5	10.2	10.0	9.7	9.5	9.3
9.0	18.2	17.4	16.6	15.9	15.3	14.7	14.2	13.7	13.2	12.8	12.4	12.0	11.6	11.3	11.0	10.7	10.4	10.1	9.8	9.6	9.4
9.2	18.4	17.6	16.8	16.1	15.5	14.9	14.4	13.9	13.4	12.9	12.5	12.1	11.8	11.4	11.1	10.8	10.5	10.2	10.0	9.7	9.5
9.4	18.7	17.9	17.1	16.4	15.7	15.1	14.5	14.0	13.5	13.1	12.7	12.3	11.9	11.5	11.3	10.9	10.6	10.3	10.1	9.8	9.6
9.6	19.0	18.1	17.3	16.6	15.9	15.3	14.7	14.2	13.7	13.3	12.8	12.4	12.0	11.7	11.4	11.0	10.7	10.5	10.2	9.9	9.7
9.8	19.2	18.3	17.5	16.8	16.1	15.5	14.9	14.4	13.9	13.4	13.0	12.6	12.2	11.8	11.5	11.2	10.9	10.6	10.3	10.0	9.8
10.0	19.5	18.6	17.8	17.0	16.3	15.7	15.1	14.6	14.0	13.6	13.1	12.7	12.3	12.0	11.7	11.3	11.0	10.7	10.4	10.1	9.9
10.5	20.1	19.2	18.3	17.6	16.8	16.2	15.6	15.0	14.5	14.0	13.5	13.1	12.7	12.3	11.9	11.6	11.3	11.0	10.7	10.4	10.2
11.0	20.8	19.8	18.9	18.1	17.3	16.7	16.0	15.4	14.9	14.4	13.9	13.4	13.0	12.6	12.3	11.9	11.6	11.3	11.0	10.7	10.4
11.5	21.4	20.4	19.5	18.6	17.8	17.1	16.5	15.9	15.3	14.8	14.3	13.8	13.4	13.0	12.6	12.2	11.9	11.6	11.3	11.0	10.7
12.0	22.1	21.0	20.0	19.1	18.3	17.6	16.9	16.3	15.7	15.1	14.6	14.2	13.7	13.3	12.9	12.5	12.2	11.9	11.5	11.2	11.0
12.5	22.7	21.6	20.6	19.7	18.8	18.1	17.4	16.7	16.1	15.5	15.0	14.5	14.1	13.6	13.2	12.8	12.5	12.1	11.8	11.5	11.2
13.0	23.3	22.2	21.1	20.2	19.3	18.5	17.8	17.1	16.5	15.9	15.4	14.9	14.4	14.0	13.5	13.1	12.8	12.4	12.1	11.8	11.5
13.5	23.9	22.7	21.7	20.7	19.8	19.0	18.2	17.6	16.9	16.3	15.8	15.2	14.7	14.3	13.9	13.5	13.1	12.7	12.4	12.0	11.7
14.0	24.5	23.3	22.2	21.2	20.3	19.5	18.7	18.0	17.3	16.7	16.1	15.6	15.1	14.6	14.2	13.8	13.4	13.0	12.6	12.3	12.0
14.5	25.2	23.9	22.8	21.7	20.8	19.9	19.1	18.4	17.7	17.1	16.5	15.9	15.4	14.9	14.5	14.1	13.7	13.3	12.9	12.6	12.3
15.0	25.8	24.5	23.3	22.2	21.3	20.4	19.6	18.8	18.1	17.4	16.8	16.3	15.8	15.3	14.8	14.4	13.9	13.6	13.2	12.8	12.5
15.5	26.4	25.0	23.8	22.7	21.7	20.8	20.0	19.2	18.5	17.8	17.2	16.6	16.1	15.6	15.1	14.7	14.2	13.8	13.5	13.1	12.8
16.0	27.0	25.6	24.4	23.2	22.2	21.3	20.4	19.6	18.9	18.2	17.6	17.0	16.4	15.9	15.4	15.0	14.5	14.1	13.7	13.4	13.0
16.5	27.6	26.2	24.9	23.7	22.7	21.7	20.8	20.0	19.3	18.6	17.9	17.3	16.7	16.2	15.7	15.2	14.8	14.4	14.0	13.6	13.3
17.0	28.2	26.7	25.4	24.2	23.2	22.2	21.3	20.4	19.7	18.9	18.3	17.7	17.1	16.5	16.0	15.5	15.1	14.7	14.3	13.9	13.5
17.5	28.8	27.3	25.9	24.7	23.6	22.6	21.7	20.8	20.0	19.3	18.6	18.0	17.4	16.8	16.3	15.8	15.4	14.9	14.5	14.1	13.8
18.0	29.4	27.8	26.5	25.2	24.1	23.1	22.1	21.2	20.4	19.7	19.0	18.3	17.7	17.2	16.6	16.1	15.7	15.2	14.8	14.4	14.0
18.5	29.9	28.4	27.0	25.7	24.5	23.5	22.5	21.6	20.8	20.0	19.3	18.7	18.0	17.5	16.9	16.4	15.9	15.5	15.1	14.7	14.3
19.0	30.5	28.9	27.5	26.2	25.0	23.9	23.3	22.0	21.2	20.4	19.7	19.0	18.4	17.8	17.2	16.7	16.2	15.8	15.3	14.9	14.5
19.5	31.1	29.5	28.0	26.7	25.5	24.4	23.3	22.4	21.6	20.8	20.0	19.3	18.7	18.1	17.5	17.0	16.5	16.0	15.6	15.2	14.8
20.0	31.7	30.0	28.5	27.2	25.9	24.8	23.8	22.8	21.9	21.1	20.4	19.7	19.0	18.4	17.8	17.3	16.8	16.3	15.8	15.4	15.0
21.0	32.8	31.1	29.5	28.1	26.8	25.7	24.6	23.6	22.7	21.8	21.1	20.3	19.6	19.0	18.4	17.8	17.3	16.8	16.4	15.9	15.5
22.0	34.0	32.2	30.5	29.1	27.7	26.5	25.4	24.4	23.4	22.5	21.7	21.0	20.3	19.6	19.0	18.4	17.9	17.4	16.9	16.4	16.0

Climate Zone	Factor
1.14	1.04
2, 3	0.99
4, 5, 12	1.07
6-11, 13, 15	0.92
16	1.50

_____ _____ _____

Basic Energy Use x CZ Factor = BEU to Line 2a, DHW-1

Instructions: Multiply Basic Energy Use by appropriate Climate Zone Factor from table. **Do not interpolate.**

Table 6-7D: Basic Energy Use (BEU) –Instantaneous Gas or Electric Heaters [no interpolation]													
Recovery	**Pilot Energy (Btu/Hour)**												
Energy	**200**	**250**	**300**	**350**	**400**	**450**	**500**	**550**	**600**	**650**	**700**	**750**	**800**
3.0	4.8	5.2	5.6	6.1	6.5	6.9	7.4	7.8	8.3	8.7	9.1	9.6	10.0
3.2	5.0	5.4	5.8	6.3	6.7	7.1	7.6	8.0	8.5	8.9	9.3	9.8	10.2
3.4	5.2	5.6	6.0	6.5	6.9	7.3	7.8	8.2	8.7	9.1	9.5	10.0	10.4
3.6	5.4	5.8	6.2	6.7	7.1	7.5	8.0	8.4	8.9	9.3	9.7	10.2	10.6
3.8	5.6	6.0	6.4	6.9	7.3	7.7	8.2	8.6	9.1	9.5	9.9	10.4	10.8
4.0	5.8	6.2	6.6	7.1	7.5	7.9	8.4	8.8	9.3	9.7	10.1	10.6	11.0
4.2	6.0	6.4	6.8	7.3	7.7	8.1	8.6	9.0	9.5	9.9	10.3	10.8	11.2
4.4	6.2	6.6	7.0	7.5	7.9	8.3	8.8	9.2	9.7	10.1	10.5	11.0	11.4
4.6	6.4	6.8	7.2	7.7	8.1	8.5	9.0	9.4	9.9	10.3	10.7	11.2	11.6
4.8	6.6	7.0	7.4	7.9	8.3	8.7	9.2	9.6	10.1	10.5	10.9	11.4	11.8
5.0	6.8	7.2	7.6	8.1	8.5	8.9	9.4	9.8	10.3	10.7	11.1	11.6	12.0
5.2	7.0	7.4	7.8	8.3	8.7	9.1	9.6	10.0	10.5	10.9	11.3	11.8	12.2
5.4	7.2	7.6	8.0	8.5	8.9	9.3	9.8	10.2	10.7	11.1	11.5	12.0	12.4
5.6	7.4	7.8	8.2	8.7	9.1	9.5	10.0	10.4	10.9	11.3	11.7	12.2	12.6
5.8	7.6	8.0	8.4	8.9	9.3	9.7	10.2	10.6	11.1	11.5	11.9	12.4	12.8
6.0	7.8	8.2	8.6	9.1	9.5	9.9	10.4	10.8	11.3	11.7	12.1	12.6	13.0
6.2	8.0	8.4	8.8	9.3	9.7	10.1	10.6	11.0	11.5	11.9	12.3	12.8	13.2
6.4	8.2	8.6	9.0	9.5	9.9	10.3	10.8	11.2	11.7	12.1	12.5	13.0	13.4
6.6	8.4	8.8	9.2	9.7	10.1	10.5	11.0	11.4	11.9	12.3	12.7	13.2	13.6
6.8	8.6	9.0	9.4	9.9	10.3	10.7	11.2	11.6	12.1	12.5	12.9	13.4	13.8
7.0	8.8	9.2	9.6	10.1	10.5	10.9	11.4	11.8	12.3	12.7	13.1	13.6	14.0
7.2	9.0	9.4	9.8	10.3	10.7	11.1	11.6	12.0	12.5	12.9	13.3	13.8	14.2
7.4	9.2	9.6	10.0	10.5	10.9	11.3	11.8	12.2	12.7	13.1	13.5	14.0	14.4
7.6	9.4	9.8	10.2	10.7	11.1	11.5	12.0	12.4	12.9	13.3	13.7	14.2	14.6
7.8	9.6	10.0	10.4	10.9	11.3	11.7	12.2	12.6	13.1	13.5	13.9	14.4	14.8
8.0	9.8	10.2	10.6	11.1	11.5	11.9	12.4	12.8	13.3	13.7	14.1	14.6	15.0
8.2	10.0	10.4	10.8	11.3	11.7	12.1	12.6	13.0	13.5	13.9	14.3	14.8	15.2
8.4	10.2	10.6	11.0	11.5	11.9	12.3	12.8	13.2	13.7	14.1	14.5	15.0	15.4
8.6	10.4	10.8	11.2	11.7	12.1	12.5	13.0	13.4	13.9	14.3	14.7	15.2	15.6
8.8	10.6	11.0	11.4	11.9	12.3	12.7	13.2	13.6	14.1	14.5	14.9	15.4	15.8
9.0	10.8	11.2	11.6	12.1	12.5	12.9	13.4	13.8	14.3	14.7	15.1	15.6	16.0
9.2	11.0	11.4	11.8	12.3	12.7	13.1	13.6	14.0	14.5	14.9	15.3	15.8	16.2
9.4	11.2	11.6	12.0	12.5	12.9	13.3	13.8	14.2	14.7	15.1	15.5	16.0	16.4
9.6	11.4	11.8	12.2	12.7	13.1	13.5	14.0	14.4	14.9	15.3	15.7	16.2	16.6
9.8	11.6	12.0	12.4	12.9	13.3	13.7	14.2	14.6	15.1	15.5	15.9	16.4	16.8
10.0	11.8	12.2	12.6	13.1	13.5	13.9	14.4	14.8	15.3	15.7	16.1	16.6	17.0
10.2	12.0	12.4	12.8	13.3	13.7	14.1	14.6	15.0	15.5	15.9	16.3	16.8	17.2
10.4	12.2	12.6	13.0	13.5	13.9	14.3	14.8	15.2	15.7	16.1	16.5	17.0	17.4
10.6	12.4	12.8	13.2	13.7	14.1	14.5	15.0	15.4	15.9	16.3	16.7	17.2	17.6
10.8	12.6	13.0	13.4	13.9	14.3	14.7	15.2	15.6	16.1	16.5	16.9	17.4	17.8
11.0	12.8	13.2	13.6	14.1	14.5	14.9	15.4	15.8	16.3	16.7	17.1	17.6	18.0
11.5	13.3	13.7	14.1	14.6	15.0	15.4	15.9	16.3	16.8	17.2	17.6	18.1	18.5
12.0	13.8	14.2	14.6	15.1	15.5	15.9	16.4	16.8	17.3	17.7	18.1	18.6	19.0
12.5	14.3	14.7	15.1	15.6	16.0	16.4	16.9	17.3	17.8	18.2	18.6	19.1	19.5
13.0	14.8	15.2	15.6	16.1	16.5	16.9	17.4	17.8	18.3	18.7	19.1	19.6	20.0
13.5	15.3	15.7	16.1	16.6	17.0	17.4	17.9	18.3	18.8	19.2	19.6	20.1	20.5
14.0	15.8	16.2	16.6	17.1	17.5	17.9	18.4	18.8	19.3	19.7	20.1	20.6	21.0
14.5	16.3	16.7	17.1	17.6	18.0	18.4	18.9	19.3	19.8	20.2	20.6	21.1	21.5
15.0	16.8	17.2	17.6	18.1	18.5	18.9	19.4	19.8	20.3	20.7	21.1	21.6	22.0
15.5	17.3	17.7	18.1	18.6	19.0	19.4	19.9	20.3	20.8	21.2	21.6	22.1	22.5

Table 6-7D continued on next page

Table 6-7D: Basic Energy Use (BEU) - Instantaneous Gas or Electric Heaters (no interpolation)

Recovery Energy	Pilot Energy (Btu/Hour)												
	200	250	300	350	400	450	500	550	600	650	700	750	800
16.0	17.8	18.2	18.6	19.1	19.5	19.9	20.4	20.8	21.3	21.7	22.1	22.6	23.0
16.5	18.3	18.7	19.1	19.6	20.0	20.4	20.9	21.3	21.8	22.2	22.6	23.1	23.5
17.0	18.8	19.2	19.6	20.1	20.5	20.9	21.4	21.8	22.3	22.7	23.1	23.6	24.0
17.5	19.3	19.7	20.1	20.6	21.0	21.4	21.9	22.3	22.8	23.2	23.6	24.1	24.5
18.0	19.8	20.2	20.6	21.1	21.5	21.9	22.4	22.8	23.3	23.7	24.1	24.6	25.0
18.5	20.3	20.7	21.1	21.6	22.0	22.4	22.9	23.3	23.8	24.2	24.6	25.1	25.5
19.0	20.8	21.2	21.6	22.1	22.5	22.9	23.4	23.8	24.3	24.7	25.1	25.6	26.0

Instructions for Instantaneous Gas Water Heaters:

1. Calculate: _____ / _____ = _____
   Adjusted Recovery Load (from line 1d, DHW 1) | Recovery Efficiency (fraction) | Recovery Energy

2. Find Basic Energy Use from table using Recovery Energy (Step 1) and Pilot Btu/hr (DHW-1, line F)
   Use nearest table values. At mid-point use higher value. **Do not interpolate.**

3. Enter Basic Energy Use in Line 2a of DHW-1

Instructions for Instantaneous Electric Water Heaters:

1. Calculate: [_____] / _____ x 3 = _____
   Adjusted Recovery Load (from line 1d, DHW-1) | Energy Factor (from line D, DHW-1) | Basic Energy Use (to line 2a, DHW-1)

2. Enter Basic Energy Use on Line 2a of Worksheet DHW-1.

Note: For instantaneous electric water heaters, Energy Factor equals Recovery Efficiency.

Table 6-7E: Jacket Loss (Indirect Gas)

Tank Volume (Gallons)	Storage Tank Insulation R-Value												
	12	13	14	15	16	17	18	20	22	24	26	28	30
0-19	1.1	1.0	1.0	1.0	0.9	0.9	0.9	0.9	0.8	0.8	0.8	0.8	0.8
20-29	1.5	1.4	1.3	1.3	1.2	1.2	1.2	1.1	1.0	1.0	1.0	0.9	0.9
30-39	1.7	1.6	1.5	1.4	1.4	1.3	1.3	1.2	1.2	1.1	1.1	1.0	1.0
40-49	1.8	1.7	1.7	1.6	1.5	1.5	1.4	1.3	1.3	1.2	1.1	1.1	1.1
50-59	2.0	1.9	1.8	1.7	1.6	1.6	1.5	1.4	1.3	1.3	1.2	1.2	1.1
60-69	2.2	2.0	1.9	1.8	1.8	1.7	1.6	1.5	1.4	1.4	1.3	1.2	1.2
70-79	2.3	2.2	2.1	2.0	1.9	1.8	1.7	1.6	1.5	1.4	1.4	1.3	1.3
80-89	2.5	2.3	2.2	2.1	2.0	1.9	1.8	1.7	1.6	1.5	1.4	1.4	1.3
90-99	2.6	2.4	2.3	2.2	2.1	2.0	1.9	1.8	1.7	1.6	1.5	1.4	1.4
100-119	2.8	2.6	2.5	2.3	2.2	2.1	2.0	1.9	1.8	1.7	1.6	1.5	1.4
120-139	3.0	2.8	2.7	2.5	2.4	2.3	2.2	2.0	1.9	1.8	1.7	1.6	1.5
140-159	3.3	3.1	2.9	2.7	2.6	2.5	2.4	2.2	2.0	1.9	1.8	1.7	1.6
160-179	3.5	3.3	3.1	2.9	2.7	2.6	2.5	2.3	2.1	2.0	1.9	1.8	1.7
180-199	3.7	3.4	3.2	3.1	2.9	2.8	2.6	2.4	2.3	2.1	2.0	1.9	1.8
200-249	4.0	3.8	3.5	3.3	3.2	3.0	2.9	2.6	2.4	2.3	2.2	2.0	1.9
250-299	4.5	4.2	3.9	3.7	3.5	3.3	3.2	2.9	2.7	2.5	2.4	2.2	2.1
300-349	4.9	4.6	4.3	4.1	3.8	3.6	3.5	3.2	2.9	2.7	2.6	2.4	2.3
350-399	5.3	5.0	4.7	4.4	4.1	3.9	3.7	3.4	3.2	2.9	2.8	2.6	2.5
400-449	5.7	5.3	5.0	4.7	4.4	4.2	4.0	3.7	3.4	3.1	2.9	2.8	2.6
450-499	6.1	5.7	5.3	5.0	4.7	4.5	4.3	3.9	3.6	3.3	3.1	2.9	2.8
500-1000	8.0	7.4	6.9	6.5	6.1	5.8	5.5	5.0	4.6	4.3	4.0	3.7	3.5
1000	9.5	8.8	8.2	7.7	7.2	6.8	6.5	5.9	5.4	5.0	4.7	4.4	4.1

Instructions:

1. No interpolation allowed.
2. Using total insulation R-value (DHW-3, line 3) and tank volume (DHW-3, line 4), find jacket loss.
3. Enter jacket loss (JL) on line 7, DHW-3.

Table 6-8 Active Solar Water Heating Analysis -- Fixed Input Parameters for F-Chart

Input	Name	Value
C9	Incidence Angle Modifier Constant	0.00
C14	Ground Reflectance	0.20
S4	Environment Temperature	70°F
L3	Daily Hot Water Load (gal/day): Single Family	4.74 x (Adjusted Recovery Load from DHW-1 line 1d)
	Multi-Family	4.74 x (Adjusted Recovery Load from DHW-1 line 1d) x (No. of dwelling units from DHW-2 line 1)
L4	Tank Set Temperature	135°F
L5	Water Main Temperature	See Table 6-10
S5	Hot Water Auxiliary Tank UA	0.00

Table 6-9: Passive Analysis—Insolation Values By Climate Zone

Climate Zone	Insolation
1	1340
2	1658
3	1684
4	1734
5	1753
6	1724
7	1748
8	1768
9	1747
10	1919
11	1706
12	1772
13	1845
14	1988
15	2007
16	1788

Table 6-10: Active & Passive Analysis—Climate Zone Water Main and Ambient Air Temperatures

Climate Zone	Ambient Air Temp. °F	Water Main Temp. °F
1	52.1	60
2	57.9	65
3	56.9	65
4	59.6	65
5	60.3	65
6	63.5	70
7	62.9	70
8	63.0	70
9	63.6	70
10	63.3	70
11	62.8	65
12	60.3	65
13	62.3	65
14	55.9	65
15	72.6	70
16	42.8	60

Table 6-11: Wood Stove Boiler Credit Factors

Climate Zone	Credit Factors	
	With Pump	Without Pump
1	0.225	0.250
2	0.225	0.250
3	0.225	0.250
4	0.135	0.150
5	0.135	0.150
6	0.090	0.100
7	0.090	0.100
8	0.045	0.050
9	0.090	0.100
10	0.045	0.050
11	0.090	0.100
12	0.135	0.150
13	0.090	0.100
14	0.090	0.100
15	0.000	0.000
16	0.270	0.300

6.4 CASE STUDIES

This Part explains how to demonstrate water heating compliance for a number of common and unusual water heating systems.

Examples

Case Studies

Example 6-1:Single family residence with one non-recirculating 40-gallon gas water heater.

This qualifies as a standard water heating system and complies automatically. No water heating calculations are required, although they may be performed to take credit for a particularly efficient water heater. See also Part 6.6.

Example 6-2:Single family residence with one non-recirculating 40-gallon heat pump water heater (EF=1.9) in Climate Zone 12.

Since the minimum EF for a heat pump water heater is 1.8, and this system meets that and all other requirements, it qualifies as a standard water heating system and complies automatically. No water heating calculations are required, although they may be completed at the option of the person submitting compliance documentation. See also Part 6.6.

Example 6-3: 1,800 ft^2 single family residence with two identical 30-gallon gas storage tank water heaters and a point of use distribution system.

Water heating calculations are required for this system, including forms DHW-1 and DHW-2A. Form DHW-1 calculates Proposed Energy Use for the single water heater type. Credit for the Point of Use distribution system is also included on Form DHW-1. Form DHW-2A calculates the building's combined Total Proposed Energy Use, and compares it against the building's Standard Energy Use.

Example 6-4: 6,000 ft^2 single family residence with 3 storage gas water heaters (40 gallon, 30 gallon and a 100-gallon unit with 80,000 Btuh input).

Water heating calculations are required for this system, including forms DHW-1, DHW-2A and DHW-3. Form DHW-1 calculates Proposed Energy Use for each individual water heater. Form DHW-3 calculates the Basic Energy Use factor for the 100 gallon water heater because its input is greater than 75,000 Btuh. Form DHW-2A calculates the building's combined Total Proposed Energy Use for the three water heaters, and compares it against the building's Standard Energy Use.

NOTE:

Because the total floor area is greater than 2,500 ft^2, the Standard Recovery Load and Standard Energy Use for the building from Table 6-5 equal that for a 2,500 ft^2 house.

Example 6-5: 2,000 ft^2 single family residence with one 30-gallon electric water heater and an active solar water heating system.

Water heating calculations are always required for electric water heaters in new buildings. This system requires both forms DHW-1 and DHW-4, including an f-Chart computer analysis to take the energy credit for the active solar water heating system.

NOTE:

For prescriptive compliance with an electric water heater, the solar system is needed to make Proposed Energy Use less than Standard Energy Use for this project.

Example6-6:10 unit multi-family building with separate gas water heaters for each dwelling unit. Five units have 30-gallon water heaters, and five units have 50-gallon water heaters.

Water heating calculations are not required if each system is non-recirculating because each dwelling unit has a standard water heating system.

Example 6-7: 8 unit, 7,800 ft^2 multi-family building with a 200-gallon storage gas water heater and temperature controlled recirculation system serving all units.

Water heating calculations are required for this system, including forms DHW-1, DHW-2B and DHW-3. See Figures 6-3 through 6-5 for the completed forms for this example.

In this situation, the correct approach is to use Form DHW-2B to calculate the average size of each dwelling unit within the building and the basic energy use per average unit.

Because a 200 gallon water heater has an input rating over 75,000 Btuh, it is necessary to use Form DHW-3 to calculate its Basic Energy Use for insertion on Line 9a of Form DHW-2B.

DHW-1 compares Proposed Energy Use to Standard Energy Use for the average dwelling unit. The Proposed Energy Use includes a penalty for the recirculation system with temperature controls.

Example 6-8: Existing 1,500 ft^2 single family residence with 500 ft^2 addition. A new 50-gallon gas storage tank water heater will replace the existing water heating system.

Since this is an alteration to an existing water heating system, no water heating calculations are required. Building energy compliance for the addition may be demonstrated for either the addition alone or for the existing-plus-addition.

Example 6-9: Existing 2,000 ft^2 single family residence with one 50-gallon gas water heater; a 600 ft^2 addition with a new instantaneous gas water heater is proposed.

When there is an increase in the number of water heaters with an addition, the standards allow addition alone compliance in certain circumstances. Since this is an instantaneous gas water heater, if it can be demonstrated that it uses no more energy than a 50-gallon gas non-recirculating storage tank (see Chapter 6, Table 6-2), then no water heating calculations are submitted.

Another alternative is to show existing-plus-addition compliance. See Figures 6-6 and 6-7 for the completed forms for this case.

Default assumptions are used for the existing water heater (see Chapter 6, Table 6-3 for default assumptions). For the existing-plus-addition portion of the analysis, a second Form DHW-1 calculates water heater type, and Form DHW-2A calculates the building's combined Total Proposed Energy Use, and compares it against the whole building's Standard Energy Use.

NOTE:

For instantaneous gas water heaters, Recovery Energy must be calculated using the instructions at the end of Table 6-7D before finding Basic Energy Use.

Example 6-10: Single family residence with one non-recirculating 50 gallon gas water heater. The water heater has an input rating of 76,000 Btu/hr.

Even though this water heater has an input rating greater than 75,000 Btu/hr, it still qualifies as a standard water heater because it is a storage gas heater of 50 gallons or less. The system still qualifies as a standard water heating system because it meets all of the stated requirements. No water heating calculations are required, and the system complies automatically. See also Part 6.6.

Example 6-11: Existing single family residence with one electric water heater; a 500 ft^2 addition with a 30-gallon electric water heater is proposed.

When there is an increase in the number of water heaters with an addition, the Standards allow addition alone compliance in certain circumstances. If this residence does not have natural gas connected to the building and the new water heater has an EF of 0.90 or greater, the system automatically complies (see Chapter 7, Table 7-2). No water heating calculations are submitted.

Example 6-12: A single family residence with one gas water heater is replacing the water heater with a new gas water heater.

This system must comply with the mandatory requirements for alterations. This includes a certified water heater and pipe insulation on the first five feet of hot and cold water pipes. Since compliance with the annual water heating budget is not required, no water heating calculations are required.

Example 6-13: A residential building is replacing a gas water heating system with an electric water heating system.

In addition to complying with mandatory requirements mentioned in Example 6-12, changing from gas to electric is prohibited (see Chapter 7, Part 7.5) unless it "can be demonstrated that the source energy use of the new system is more efficient than the existing system."

Alterations can also show compliance using an "existing-plus-alteration" compliance approach, as explained in Chapter 7, Part 7.5. This approach could be used to take credit for improvements to the building being made to offset the water heating changes.

WATER HEATING WORKSHEET — DHW-1

Multi-Family w/Central System — Project Title
July 1, 1999 — Date

No. of Different Water Heater Types: 1 Total No. of Water Heaters: 1 Conditioned Floor Area (CFA): 7800 ft2

Notes: For single family dwellings with multiple water heaters, also submit DHW-2A. For multi-family buildings, also submit DHW-2B.

	Heater Type # 1 Data	Heater Type # ____ Data	Heater Type # ____ Data
A. **Water Heater Type** (check one)	___ Storage Gas ✓ Large Storage Gas ___ Storage Electric ___ Storage Heat Pump ___ Instantaneous Gas ___ Instantaneous Electric ___ Indirect Gas	___ Storage Gas ___ Large Storage Gas ___ Storage Electric ___ Storage Heat Pump ___ Instantaneous Gas ___ Instantaneous Electric ___ Indirect Gas	___ Storage Gas ___ Large Storage Gas ___ Storage Electric ___ Storage Heat Pump ___ Instantaneous Gas ___ Instantaneous Electric ___ Indirect Gas
B. **Manufacturer**	SoHot		
C. **Model No.**	G200		
D. **Energy Factor**	NA		
E. **Gallons**	200		
F. **Pilot Btu/hr**	NA		
G. Thermal **Eff.**	0.78		
H. **Auxiliary Input** (check one or both)	___ Wood Stove ___ Solar, Active or Passive	___ Wood Stove ___ Solar, Active or Passive	___ Wood Stove ___ Solar, Active or Passive
I. **Distribution System** (check one)	___ Standard ___ Hot Water Recovery (HWR) ___ Point of Use (POU) ___ Pipe Insulation (PI) ___ Recirculation: No Control ___ Recirculation: Timer ✓ Recirculation: Temp. ___ Recirculation: Time/Temp. ___ Recirculation: Demand ___ HWR + Recirculation: Demand ___ PI + Recirculation: Demand	___ Standard ___ Hot Water Recovery (HWR) ___ Point of Use (POU) ___ Pipe Insulation (PI) ___ Recirculation: No Control ___ Recirculation: Timer ___ Recirculation: Temp. ___ Recirculation: Time/Temp. ___ Recirculation: Demand ___ HWR + Recirculation: Demand ___ PI + Recirculation: Demand	___ Standard ___ Hot Water Recovery (HWR) ___ Point of Use (POU) ___ Pipe Insulation (PI) ___ Recirculation: No Control ___ Recirculation: Timer ___ Recirculation: Temp. ___ Recirculation: Time/Temp. ___ Recirculation: Demand ___ HWR + Recirculation: Demand ___ PI + Recirculation: Demand
Energy Use Calculation			
1a. Standard Recovery Load (from Table 6-5 or DHW 2a or 2b)	9.7		
1b. Distribution Credit/Penalty (from Table 6-6)	-0.5		
1c. Solar Energy Credit (from DHW-4)	0		
1d. Adjusted Recovery Load (1a - 1b - 1c)	10.2		
2a. Basic Energy Use (from Table 6-7)	16.7		
2b. Wood Stove Boiler Credit (from DHW-4)	0		
2c. **Proposed Energy Use** (2a - 2b)	16.7		
3. **Standard Energy Use** (from Table 6-5)	18.8		

4. **For Prescriptive Compliance** (one water heater per dwelling): Line 2c must not exceed Line 3

July 1, 1999

Figure 6-3: Example 6-7 DHW-1 Form
Multi-Family with Central System

WATER HEATING FOR MULTI-FAMILY BUILDINGS — DHW-2B

Multi-Family w/Central System — Project Title
July 1, 1999 — Date

Notes: In addition to this form, a DHW-1 Water Heating Worksheet must also be submitted to document water heating type(s). If the calculation (line 4) is by "Individual Dwelling Unit" and system configuration (line 5) is "Individual Heaters," no additional information need be entered on this sheet.

Multi-Family Project Data

1. Number of dwelling units: 8
2. Total conditioned floor area: 7800 ft²
3. Average floor area: 975 (Line 2/Line 1)
4. Calculation by (check one):
   - ✓ Average Dwelling Unit
   - ___ Individual Dwelling Unit
5. System configuration (check one):
   - ___ Individual Heaters (one per dwelling unit)
   - ✓ Shared Heaters (multiple dwelling units per heater)

Analysis by Average Dwelling Unit

One Individual Heater Per Dwelling Unit

	No. of Heaters	Heater Type#	Manufacturer and Model#	Gallons Each	Gallons Total[1]	Energy Factor Each	Energy Factor Total[2]	Thermal Efficiency Each	Thermal Efficiency Total[3]
6a =	1	#1	SoHot G200						
6b =		#2							
6c =		#3							
Total	1	= 7a		Total ___	= 7b	Total ___	= 7c	Total ___	= 7d
				Ave.	= 8a	Ave.	= 8b	Ave.	= 8c
				(7b/7a)		(7c/7a)		(7d/7a)	

Individual Heaters

9a. Enter value 8a on DHW-1 Line E.
10a. Enter value 8b on DHW-1 Line D.
11a Enter value 8c on DHW-1 line G.
12a. Check compliance on DHW-1 for average dwelling unit and average water heating.

Shared Heater(s)

9b. Average unit Adjusted Recovery Load: 10.2 From DHW-1, Line 1d

10b. Total Adjusted Recovery Load: 81.6 (Line 1) × (Line 9b)

11b. Total Basic Energy Use: 93.8 From Table 6-7, or DHW-3

12b. Average Unit Basic Energy Use: 11.7 (Line 11b) ÷ (Line 1): enter on Line 2a, DHW-1

13b. Check average unit compliance on DHW-1.

Compliance

14. **Prescriptive Compliance** (for individual or shared heaters):
DHW-1 Line 2c must be equal to or less than DHW-1 Line 3.
See Part 6.1 and Chapter 3 in the *Residential Manual* for details.

[1] Total Gallons = (No. of Heaters) x (Gallons for each heater of this Heater Number)
[2] Total Energy Factor = (No. of Heaters) x (Energy Factor for each heater of this Heater Number)
[3] Total Thermal Efficiency = (No. of Heaters) x (Thermal Efficiency for each heater of this Heater Number)

July 1, 1999

Figure 6-4: Example 6-7 DHW-2B Form
Multi-Family with Central System

INDIRECT & LARGE STORAGE GAS WATER HEATERS DHW-3

Multi-Family w/Central System — Project Title
July 1, 1999 — Date

Note: This sheet must also be submitted with a DHW-1 water heating worksheet, as well as a DHW-2B form with large storage gas heaters in multi-family buildings.

Indirect Gas Water Heaters

1.	Storage tank Manufacturer/Model No.		
2.	Boiler and Instantaneous Heater Manufacturer/Model No.		
3.	Storage tank insulation R-value: Tank _____ External _____	Total	_____
4.	Storage tank volume (gallons)		_____
5.	Boiler AFUE or Instantaneous Water Heater Thermal (Recovery) Efficiency	EFF	_____
6.	Adjusted Recovery Load (MBtu/yr, from Line 1d, DHW-1)	ARL	_____
7.	Jacket loss (MBtu/yr, from Table 6-7E)	JL	_____
8.	Pilot Energy (Btuh, from appliance database, or use 800)	PE	_____
9.	Basic Energy Use (BEU) = (ARL + JL) ÷ (0.98 × EFF) + (PE × 0.00876) (Enter BEU on DHW-1, Line 2a or on DHW-2B, Line 11b)	BEU	_____

Large Storage Gas Heaters (> 75,000 Btuh input)

1.	Water Heater Manufacturer	So Hot	
2.	Water Heater Model No.	G200	
3.	Storage Tank Volume (gallons)	VOL=	200
4.	Water Heater Thermal (Recovery) Efficiency (decimal fraction)	EFF	0.78
5.	Adjusted Recovery Load (Mbtu/yr, from Line 1d, DHW-1 or Line 10b, DHW-2B)	ARL	81.6
6.	Standby Loss % (from appliance database - e.g., "2.7")	SBL%	2.5
7.	Basic Energy Use (BEU) = [ARL/EFF + (5.461 × SBLxVOL)/100] (Enter BEU on DHW-1, Line 2a or on DHW-2B, Line 11b)	BEU	133.5

July 1, 1999

Figure 6-5: Example 6-7 DHW-3 Form
Multi-Family with Central System

WATER HEATING WORKSHEET — DHW-1

Jones Residence: Existing & Addition — Project Title
July 1, 1999 — Date

No. of Different Water Heater Types: 2 — Total No. of Water Heaters: 2 — Conditioned Floor Area (CFA): 2600 ft2

Notes: For single family dwellings with multiple water heaters, also submit DHW-2A. For multi-family buildings, also submit DHW-2B.

	Heater Type # 1 Data	Heater Type # 2 Data	Heater Type # ____ Data
A. **Water Heater Type** (check one)	✓ Storage Gas ___ Large Storage Gas ___ Storage Electric ___ Storage Heat Pump ___ Instantaneous Gas ___ Instantaneous Electric ___ Indirect Gas	___ Storage Gas ___ Large Storage Gas ___ Storage Electric ___ Storage Heat Pump ✓ Instantaneous Gas ___ Instantaneous Electric ___ Indirect Gas	___ Storage Gas ___ Large Storage Gas ___ Storage Electric ___ Storage Heat Pump ___ Instantaneous Gas ___ Instantaneous Electric ___ Indirect Gas
B. **Manufacturer**	So Hot	GTherm	
C. **Model No.**	G40	I 00	
D. **Energy Factor**	0.60	NA	
E. **Gallons**	40	NA	
F. **Pilot Btu/hr**	NA	300	
G. Thermal **Eff.**	NA	0.80	
H. **Auxiliary Input** (check one or both)	___ Wood Stove ___ Solar, Active or Passive	___ Wood Stove ___ Solar, Active or Passive	___ Wood Stove ___ Solar, Active or Passive
I. **Distribution System** (check one)	✓ Standard ___ Hot Water Recovery (HWR) ___ Point of Use (POU) ___ Pipe Insulation (PI) ___ Recirculation: No Control ___ Recirculation: Timer ___ Recirculation: Temp. ___ Recirculation: Time/Temp. ___ Recirculation: Demand ___ HWR + Recirculation: Demand ___ PI + Recirculation: Demand	✓ Standard ___ Hot Water Recovery (HWR) ___ Point of Use (POU) ___ Pipe Insulation (PI) ___ Recirculation: No Control ___ Recirculation: Timer ___ Recirculation: Temp. ___ Recirculation: Time/Temp. ___ Recirculation: Demand ___ HWR + Recirculation: Demand ___ PI + Recirculation: Demand	___ Standard ___ Hot Water Recovery (HWR) ___ Point of Use (POU) ___ Pipe Insulation (PI) ___ Recirculation: No Control ___ Recirculation: Timer ___ Recirculation: Temp. ___ Recirculation: Time/Temp. ___ Recirculation: Demand ___ HWR + Recirculation: Demand ___ PI + Recirculation: Demand
Energy Use Calculation			
1a. Standard Recovery Load (from Table 6-5 or DHW 2a or 2b)	7.8	7.8	
1b. Distribution Credit/Penalty (from Table 6-6)	0	0	
1c. Solar Energy Credit (from DHW-4)	0	0	
1d. Adjusted Recovery Load (1a - 1b - 1c)	7.8	7.8	
2a. Basic Energy Use (from Table 6-7)	15.7	12.4	
2b. Wood Stove Boiler Credit (from DHW-4)		0	
2c. **Proposed Energy Use** (2a - 2b)		12.4	
3. **Standard Energy Use** (from Table 6-5)	—	—	

4. **For Prescriptive Compliance** (one water heater per dwelling): Line 2c must not exceed Line 3

July 1, 1999

Figure 6-6: Example 6-9 DHW-1 for Existing + Addition
Existing + Addition Analysis

SINGLE FAMILY W/ MULTIPLE WATER HEATERS **DHW-2A**

Jones Residence : Existing + Addition (Project Title) July 1, 1999 (Date)

Note: In addition to this form, a DHW-1 Water Heating Worksheet must also be submitted to document water heater type(s).

Single Family Project Data

1. No. of different water heater types: 2
2. Total conditioned floor area: 2500 ft²

	No. of Heaters	Heater Type #	Manufacturer & Model No.
3a.	1	#1	SoHot G40
3b.	1	#2	GTherm I00
3c.		#3	

4. 2 Total Number of Water Heaters
5. Standard Recovery Load: 15.6 from Table 6-5 based on line 2
6. Recovery Load Per Heater: 7.8 (line 5 ÷ line 4); enter on DHW-1, line 1a for each Heater Type, and complete calculation through line 2c.
7. Proposed Energy Use, Heater #1: 15.7 (from DHW-1 line 2c, Heater #1) × (line 3a)
8. Proposed Energy Use, Heater #2: 10.4 (from DHW-1 line 2c, Heater #2) × (line 3b)
9. Proposed Energy Use, Heater #3: — (from DHW-1 line 2c, Heater #3) × (line 3c)
10. Total Proposed Energy Use: 26.1 (line 7 + line 8 + line 9)
11. Standard Energy Use: 26.1 from Table 6-5 based on line 2

Compliance

12. **Prescriptive Compliance:** Line 10 must be equal to or less than line 11. See Part 6.1 and Chapter 3 in the *Residential Manual* for details.

July 1, 1999

Figure 6-7: Example 6-9 DHW-2A for Existing + Addition
Existing + Addition Analysis

6.5 COMBINED HYDRONIC SPACE AND WATER HEATING

Compliance/
Plan Check

Combined Hydronic

Chapter 8, Part 8.9 explains hydronic space heating systems. When such a system serves the additional function of providing domestic hot water, the system is analyzed for its water heating performance as if the space heating function were separate. In other words, treat any hydronic system used for water heating the same as any other water heating system: Input the correct water heater type, auxiliary input credit (if any) and specify the distribution system on DHW-1.

The DHW-5 is used to calculate an effective AFUE or to adjust the AFUE for pipe losses when a space heating boiler is also used for water heating (see Part 6.3).

Complete the DHW-5 worksheet for any project that includes a hydronic space heating system, combined hydronic space and water heating system, or boiler (see Part 6.3). This worksheet should accompany all necessary water heating compliance worksheets. The DHW-5 worksheet is used to determine the Effective AFUE for storage gas water heaters and the Effective HSPF for storage electric and heat pump water heaters used to supply energy for the combined hydronic space and water heating system.

For performance compliance, the water heating worksheets are not printed, but the inputs will appear on the C-2R and CF-1R forms.

6.6 SYSTEM DESCRIPTIONS

Construction

System Types and Installation Criteria

The water heating calculation method evaluates water heating systems by analyzing the following system components: Water Heaters, Auxiliary Systems and Distribution Systems. Separate calculations are required for Hydronic Space and Water Heating Systems. This part describes all of the system types that fall within each category, and explains installation criteria.

WATER HEATERS

This part describes water heater types which can be analyzed using the water heating method:

- Standard Water Heater
- Storage Gas
- Large Storage Gas
- Storage Electric
- Storage Heat Pump
- Instantaneous Gas
- Instantaneous Electric
- Indirect Gas

All water heaters must be certified (see Chapter 1, Part 1.6). This guarantees that they meet the minimum requirements of the National Efficiency Standards and State Efficiency Standards as described in the California Appliance Efficiency Regulations.

For small storage gas water heaters this corresponds to an Energy Factor = 0.62 - (0.0019 x Volume).

For small storage electric water heaters the minimum is an Energy Factor = 0.93 - (0.00132 x Volume).

Standard Water Heater

A standard water heater is one that automatically complies with the standards, since its characteristics meet the installation criteria described below. For a system in a single family dwelling consisting of a single standard water heater and a standard distribution system, compliance is demonstrated by listing water heater type and distribution system on form CF-1R. No other water heating calculations are required.

Installation Criteria:

One gas water heater of 50 gallons capacity or less per dwelling unit. On any unit with an EF of less than 0.58, R-12 external insulation is mandatory.

Storage Gas

A gas water heater designed to heat and store water at less than 180 °F. Water temperature is controlled with a thermostat. Storage gas water heaters have a manufacturer's specified storage capacity of at least two gallons and less than 75,000 Btuh input.

Large Storage Gas

A storage gas water heater with greater than 75,000 Btuh input.

Storage Electric

An electric water heater designed to heat and store water at less than 180 °F. Water temperature is controlled with a thermostat. Storage electric water heaters have a manufacturer's specified storage capacity of at least two gallons.

Storage Heat Pump

An electric water heater that uses a compressor to transfer thermal energy from one temperature level to a higher temperature level for the purpose of heating water. It includes all necessary auxiliary equipment such as fans, storage tanks, pumps or controls. EFs for heat pump water heaters are found in the Commission's *Directory of Certified Water Heaters*.

Instantaneous Gas

A gas water heater controlled manually or automatically by a water flow activated control or a combination of water flow and thermostatic controls, with a manufacturer's specified storage capacity of less than two gallons.

Recovery efficiency and pilot energy are in the Commission's database of certified water heaters.

Instantaneous Electric

An electric water heater controlled automatically by a thermostat, with a manufacturer's specified storage capacity of less than two gallons.

NOTE:
Instantaneous water heaters are not generally designed for use with solar water heating systems or as heat sources for indirect fired water heaters. They are also typically inappropriate for use with recirculation systems. Consult manufacturer's literature when considering these applications.

Indirect Gas

A water heater consisting of a storage tank with no heating elements or combustion devices, connected via piping and recirculating pump to a heat source consisting of a gas or oil fired boiler, or instantaneous gas water heater (see note following the definitions of Instantaneous Gas and Electric).

Installation Criteria:

The storage tank must be insulated in accordance with Section 150(j)1.B. of the standards, which requires a factory-installed minimum of R-16 (labeled on outside of tank) or a minimum of R-12 external insulation (see Chapter 2, Part 2.4).

The piping connecting the heating source and the storage tank must be insulated to R-4 for pipe less than or equal to 2 inches in diameter, and to R-6 for pipes larger than 2 inches in diameter. This includes any piping located in concrete slabs or underground.

External Tank Insulation

Insulation applied to the exterior of storage type water heater tanks.

When installed, water heater insulation should be applied to completely cover the exterior sides of water heaters, but should not conceal controls or access ports to burners, cover combustion air openings, or interfere in any way with safe water heater operation. Insulation of top and bottom surfaces is not necessary.

External tank insulation is mandatory for water heaters with less than 0.58 EF, and for unfired water heater tanks that do not have R-16 internal insulation (as indicated on the outside of the tank).

AUXILIARY SYSTEMS

Auxiliary systems add hot water to the overall water heating system through means other than the typical water heaters defined above.

The Water Heating Calculation Method allows water heating credits for three auxiliary systems which save energy by using nondepletable resources as energy sources. These systems – Passive and Active Solar Water Heaters and Wood Stove Boilers – are described below.

Passive Solar Water Heaters

Systems which collect and store solar thermal energy for domestic water heating applications and do not require electrical energy input for recirculating water through a solar collector.

Installation Criteria:

Passive solar water heaters must be tested in accordance with Solar Rating & Certification Corporation (SRCC) Standard 200-82, except as noted below.

Thermosyphon solar water heaters employing flat plate collectors comply with test requirements if collectors are tested in accordance with SRCC Standard 100-81.

SRCC's address is:

Solar Rating & Certification Corporation
122 "C" Street NW. 4th Floor
Washington, DC 20001-2109

Active Solar Water Heaters

Systems which collect and store solar thermal energy for domestic water heating applications requiring electrical energy input for operation of pumps or other components.

Installation Criteria:

Flat plate collectors used with active solar waters must be tested in accordance with SRCC Standard 100-81 (see address above).

Wood Stove Boilers

Wood stoves equipped with heat exchangers for heating domestic hot water (see Figure 6-8).

Installation Criteria:

Energy credits may only be taken when the building department having jurisdiction has determined that natural gas is not available.

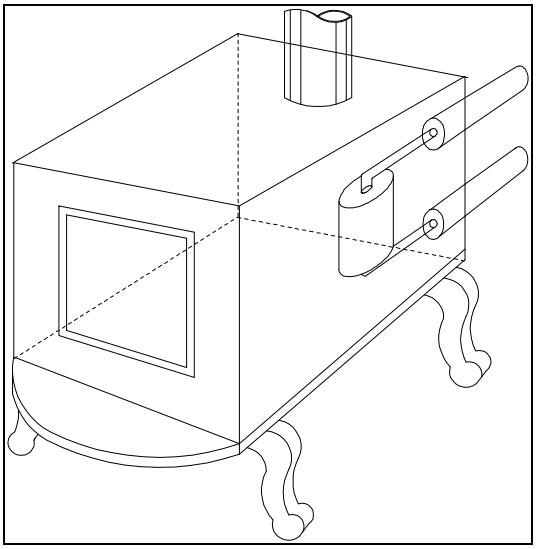

Figure 6-8: Wood Stove Boiler

A tempering valve must be installed at the outlet of the water heater to prevent scalding.

A pressure-temperature relief valve must be installed at the wood stove.

The wood stove boiler must be properly sized to minimize the amount of excess hot water produced by the unit.

All health and safety codes, including codes applying to pressurized boiler vessels, must be met.

DISTRIBUTION SYSTEMS

The water heating distribution system is the configuration of piping, pumps and controls that regulates delivery of hot water from the water heater to all end uses within the building.

All criteria listed below are based on Commission contract #400-88-003, *Residential Water Heating Study*: March 31, 1991.

The water heating calculation method gives credits for especially energy-efficient distribution systems, while taking penalties for less energy-efficient systems (see Table 6-6). The distribution systems that may be analyzed are:

- Standard Distribution System
- Point of Use
- Hot Water Recovery
- Pipe Insulation
- Recirculation: Continuous
- Recirculation: Temperature Controlled
- Recirculation: Time Controlled
- Recirculation: Time & Temperature Controlled
- Recirculation: Demand Pumping
- Hot Water Recovery + Recirculation: Demand Pumping
- Pipe Insulation + Recirculation: Demand Pumping

Only one distribution system type may be chosen for each water heating system, with the exception of recirculation systems with demand pumping which may be combined with ***either*** *hot water recovery systems* ***or*** *pipe insulation.* In either of these cases the two appropriate adjustment values from Table 6-6 are added together and input as Distribution Credit on form DHW-1.

Pipe insulation is required for all other recirculation systems (except Demand) and may not be used for extra credit (see Chapter 2, Part 2.4).

Standard Distribution System

A standard distribution system does not incorporate a pump for recirculation of hot water, and does not take credit for any design features eligible for energy credits. A distribution system normally eligible for energy credits, such as one with pipe insulation, may be modeled as standard (i.e., no credits) to avoid the need for any water heating calculations.

Compliance for any water heating system in a single family house with standard distribution and only one standard water heater is demonstrated by listing the water heater type and distribution system on form CF-1R. No other water heating forms are required.

Installation Criteria:

No pumps may be used to recirculate hot water. The first five feet of hot and cold water piping adjacent to the water heater must be insulated with minimum R-4 insulation (see Chapter 2, Part 2.4).

Point of Use

A distribution piping system that limits hot water distribution system heat loss by minimizing the distance between the water heater and hot water fixtures.

Credit for only one Point of Use may be taken even if additional water heaters meeting the criteria will be installed.

Installation Criteria:

The distance between the water heater and any hot water fixture cannot exceed eight feet, measured in plan view (see Figure 6-9).

All water heaters and hot water fixtures must be shown on plans submitted for local building department plan check.

EXCEPTION: Washing machines for clothing may be located more than eight feet from the water heater.

Hot Water Recovery System

A distribution system that includes a device that reclaims hot water from the distribution piping by drawing it back to the water heater or other insulated storage vessel.

Installation Criteria:

Hot water recovery systems (HWR) must be plumbed such that a positive supply of cold water from the water supply main is provided to the appropriate connection on the device.

Hot water recovery systems must be connected to each water heater serving individual dwelling units.

Credit for only one HWR may be taken even though more than one may be installed or specified in the building plans.

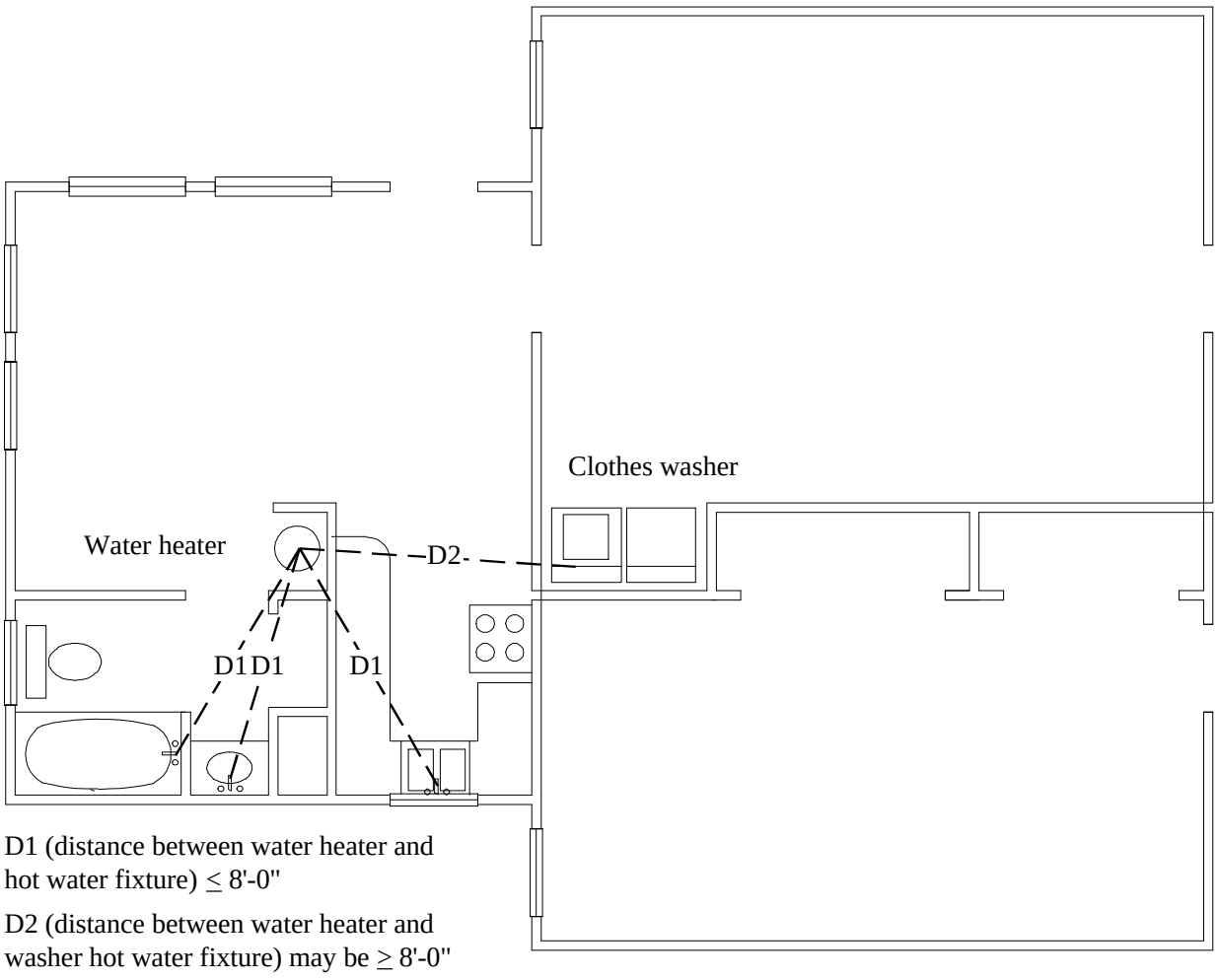

D1 (distance between water heater and hot water fixture) ≤ 8'-0"

D2 (distance between water heater and washer hot water fixture) may be ≥ 8'-0"

Figure 6-9: Point of Use

Credit may not be taken for a HWR in a multi-family central water heating system serving multiple dwelling units.

Hot water recovery systems may be used for credit in recirculation systems with demand pumping.

Pipe Insulation

Table 6-6 lists credits that may be taken for insulation of water mains in addition to insulation required by Section 150 of the Standards (first five feet from water heater). The pipe insulation credit is only allowed for 3/4 inch or larger, non-recirculating hot water mains and Demand Recirculating Systems.

Installation Criteria:

R-value of applied insulation must not be less than R-4.0, or less than R-6.0 for pipe diameters greater than 2 inches. No additional credit may be taken for R-4 or R-6 insulation, respectively (see Part 2.3).

Pipe insulation may only be used for credit in recirculation systems with demand pump. *Pipe insulation is required for all other recirculation systems and is not eligible for credit.*

NOTE:
Heat tape – electric resistance heating tape wrapped around hot water pipes – may be used only for freeze protection and cannot be used instead of mandatory pipe insulation (see Chapter 2, Part 2.3) or pipe insulation receiving distribution credit.

Recirculation System

Continuous distribution system using a pump to recirculate hot water to branch piping though a looped hot water main with no control of the pump, such that water flow is continuous.

Installation Criteria:

All piping used to recirculate hot water must be insulated with R-4 insulation or equivalent. This includes any recirculating piping located in concrete slabs or underground. Since the standards require this insulation, it is not eligible for the Pipe Insulation credit.

Recirculation System: Temperature Controlled

Recirculation system that uses temperature controls to cycle pump operation to maintain circulated water temperatures within certain limits.

Installation Criteria:

All criteria listed for continuous recirculation systems apply.

An automatic thermostatic control must be installed to cycle the pump on and off in response to the temperature of water returning to the water heater through the recirculation piping. Minimum differential or "deadband" of the control shall not be less than 20°F.

Plans must indicate pump and control manufacturer, model number and temperature settings.

Recirculation System: Time Controlled

Recirculation system that uses a timer control to cycle pump operation based on time of day.

Installation Criteria:

All criteria listed for continuous recirculation systems apply.

A timer must be permanently installed to regulate pump operation. Timer setting must permit the pump to be cycled off for at least eight hours per day.

Plans must indicate pump and timer manufacturer and model number.

Recirculation System: Time and Temperature Controlled

Recirculation system that uses both temperature and timer controls to regulate pump operation.

Installation Criteria:

All criteria listed for continuous, temperature controlled and timer controlled recirculation systems apply.

Recirculation System: Demand Pumping

Recirculation system that uses brief pump operation to recirculate hot water to fixtures on demand.

Installation Criteria:

All criteria listed for continuous recirculation systems apply, except that pipe insulation is not required.

Pump start-up must be provided by one or more momentary contact switches, or a hot water flow sensing device located at the water heater. Systems using momentary contact switches must have at least one switch at each floor level, one of which must be located at the kitchen sink.

Pump shut-off must be provided by either a temperature sensing device that shuts off the pump when the pipe is full of hot water, or by a timer which limits pump run time to two minutes or less.

Plans must include a wiring/circuit diagram, and manufacturer/model numbers for the pump and timer/temperature sensing device.

Demand systems can only be used for control of pumps serving one dwelling unit. They are not used for central systems in multi-family buildings.

NOTE:

In an exception to the rule that distribution systems may not be combined, insulation ***or*** hot water recovery systems may be used for credit in recirculation systems with demand pumping (see below). Pipe insulation is required for all other recirculation systems, so it is not eligible for extra credit.

NOTE:
Recirculation systems are not used with instantaneous water heaters.

Hot Water Recovery + Recirculation System: Demand Pumping

This combination system receives both credits explained under each system, separately, above. Installation criteria for both credits – hot water recovery and demand recirculation – apply to this combined distribution type.

Pipe Insulation + Recirculation System: Demand Pumping

This combination system receives both credits explained under each system, separately, above. Installation criteria for both credits – pipe insulation and demand recirculation – apply to this combined distribution type.

Hydronic Space and Water Heating

Combined Hydronic Space and Water Heating

A combined water and space heating system using the same water heater to heat the building and to provide domestic hot water.

Installation Criteria:

Piping for pump recirculating hydronic space heating supply lines must be insulated to R-4 for pipes less than or equal to 2 inches nominal diameter and R-6 for larger pipe diameters.

Dedicated (Separate) Hydronic Space Heating

A system using separate water heaters to provide space heating and domestic hot water, each dedicated to one function.

Installation Criteria:

Piping for pump recirculating hydronic space heating supply lines must be insulated to R-4.0 for pipes 2 inches or less in diameter and to R-6.0 for larger pipe diameters. See the standards, Section 150(j).

Chapter 7: Additions and Alterations

7.0 SUMMARY

This chapter discusses requirements and options for demonstrating compliance with the requirements of the *Energy Efficiency Standards* (standards) for residential additions and alterations. Part 7.1 introduces the topic and lists compliance options for residential additions. Part 7.2 covers energy analysis of the addition alone, including both prescriptive and performance options. Part 7.2 also explains how to demonstrate water heating energy compliance when analyzing an addition alone. Part 7.3 describes the Existing-Plus-Addition method of compliance for use with approved computer performance methods. It includes discussion of assumptions permitted when modeling an existing building. Part 7.4 provides information on space-conditioning equipment for additions, including restrictions on installing electric resistance space heating. Part 7.5 covers alterations and meeting energy compliance requirements. Part 7.6 discusses compliance requirements for building repairs.

CHAPTER OVERVIEW:

Part	Topic	Page
7.1	**Introduction**	**7-1**
	Additions	7-2
	Alterations	7-3
	Repairs	7-4
7.2	**Compliance Analysis of an Addition Alone**	**7-5**
	Prescriptive	7-5
	Performance	7-8
	Water Heating Compliance	7-10
7.3	**Compliance Analysis Using the Existing-Plus-Addition Method**	**7-11**
	Existing Building Assumptions	7-14
	Existing Plus Addition	7-16
	Approved Computer Methods	7-16
7.4	**Space-conditioning Equipment for Additions**	**7-18**
	Electric Resistance Space Heating	7-19
7.5	**Alterations**	**7-19**
	Mandatory Measures	7-19
	Fenestration Requirements	7-20
	Space Heating/Cooling	7-20
	Water Heating	7-21
	Performance Approach	7-22
7.6	**Repairs**	**7-24**

Applicable sections of the California Code of Regulations, Title 24, Part 6: Sections 101, 110 through 118, 150, 151 and 152.

7.1 INTRODUCTION

Energy Code

Addition/Alteration/Repair (Section 101(b))

ADDITION is any change to a building that increases conditioned floor area and conditioned volume. See also, NEWLY CONDITIONED SPACE.

ALTERATION is any change to a building's water heating system, space conditioning system, lighting system, or envelope that is not an addition.

NEWLY CONDITIONED SPACE is any space being converted from unconditioned to directly conditioned or indirectly conditioned space . . .

Newly conditioned space must comply with the requirements for an addition. See . . . Section 152 for residential occupancies.

REPAIR is the reconstruction or renewal of any part of an existing building for the purpose of its maintenance. Note: Repairs to low-rise residential buildings are not within the scope of these standards.

Introduction

Residential additions and alterations are common types of new construction. This chapter covers all compliance requirements and compliance alternatives unique to additions and alterations.

ADDITIONS

Additions are any changes to an existing building that increase the conditioned floor area *and* volume. Converting a garage or unheated basement into a conditioned living space, enclosing and conditioning a patio, or building onto a home are all examples of an addition. Compliance is based on the climate zone (see Appendix C) in which the building is located.

Other information on the subjects of the prescriptive packages and the computer performance method is contained in Chapters 3 and 4.

Compliance Options for Additions

Any one of several options may be used in demonstrating compliance for an addition:

- Show that the addition alone meets the applicable prescriptive requirements (Figure 7-1) or the performance method energy budget.
- Show that the remodeled building including the addition ("existing-plus-addition") uses the same or less energy than the unimproved building and a separate addition that meets the performance method energy budget (Figure 7-2).
- Show that the entire building meets the prescriptive requirements or the performance method energy budget for the building as a whole (Section 152(d)).

Characteristics of Prescriptive, Addition Alone

- Simplest to document.
- Very small additions have less stringent requirements.
- Limited to Package D only.
- New space-conditioning systems require setback thermostat (exceptions do not apply).
- Limited to percentage of glass allowed by Package D (with credit for glazing removed from the existing building).
- Any dual glazed skylight or dual-glazed greenhouse window can be assumed to meet the U-value requirement.

Characteristics of Performance, Addition Alone

- Some flexibility
- Existing structures with R-11 in the framed walls do not have to meet the R-13 mandatory requirement.
- If one of the non-central space-conditioning systems is installed, no setback is required as long as a "no setback" condition is modeled .
- Allows tradeoffs in efficiency measures (e.g., R-19 ceilings with lower glass U-value).
- Can exceed prescriptive limitations on glass.
- Any dual-glazed skylight or dual-glazed greenhouse window can be assumed to meet the U-value requirement.

Characteristics of Performance, Existing-Plus-Addition

- Same characteristics as noted above for performance compliance of addition alone.
- Most flexibility.
- Allows efficiency improvements to the existing structure to compensate for inefficiencies in the addition.
- Allows credit for energy efficiency improvements made in the past.

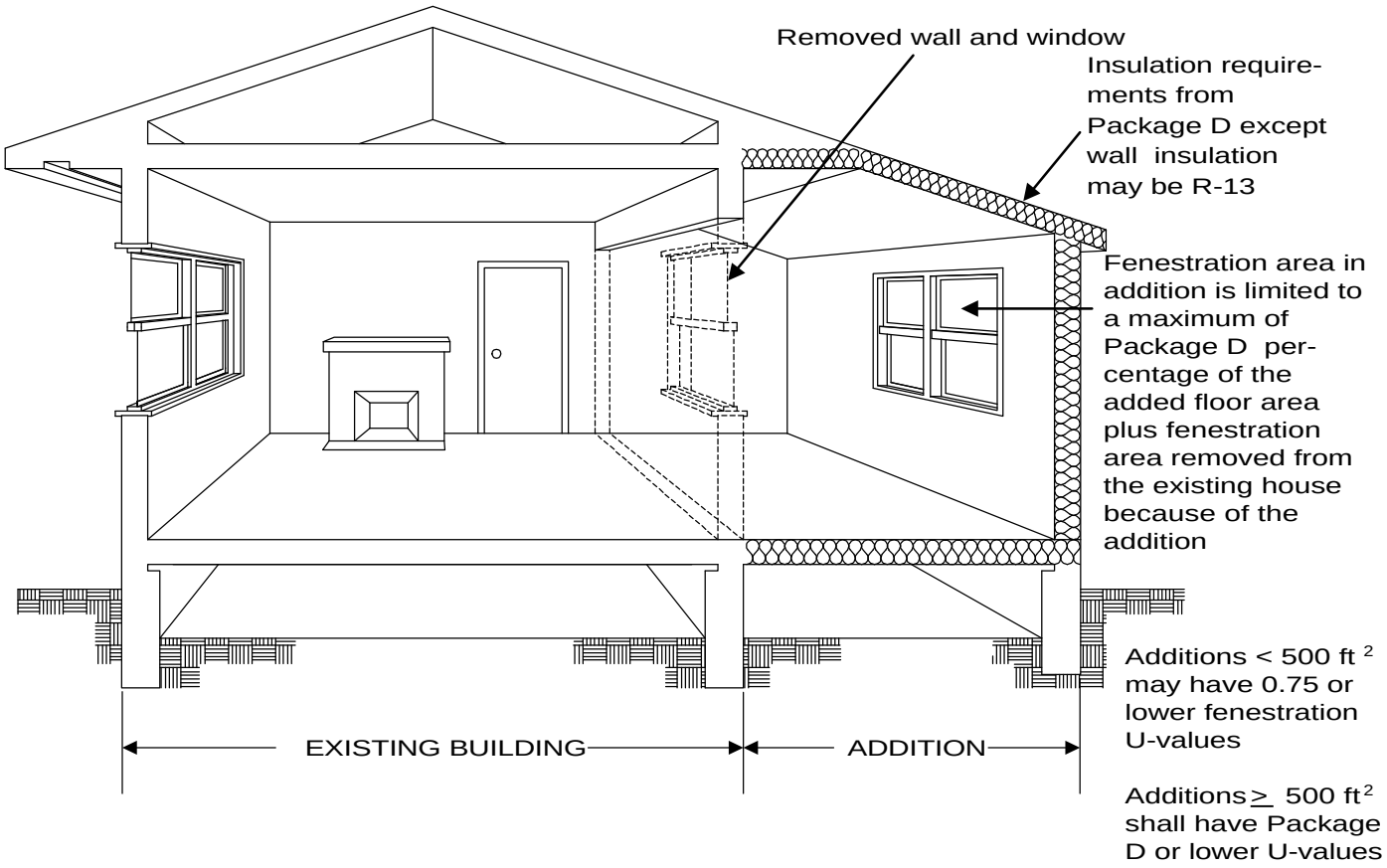

Figure 7-1 Compliance Option for Addition:
Package D For Addition Alone (floor area less than 1000 ft^2)

ALTERATIONS

Within the context of the standards, alterations are changes to a building's envelope, space-conditioning system, water-heating system or lighting system which are not additions. An alteration does not increase both conditioned volume and floor area. Examples include:

- Adding a new skylight (or window) to an existing building. If the skylight has a light well that cuts through an existing attic, the alteration adds conditioned volume but is not an addition because it does not add conditioned floor area.
- Adding a new greenhouse window to an existing building. This is an alteration rather than an addition because it adds conditioned volume to the building but not conditioned floor area.
- Adding a loft within the existing conditioned volume of a residence. This is an alteration rather than an addition because it adds conditioned floor area but not conditioned volume.

Compliance Options for Alterations

Prescriptive compliance requires meeting mandatory measures on new systems or components being altered. New windows being added must meet a maximum U-value of 0.75 (except dual-glazed skylights and dual-glazed greenhouse windows). Changing fuel types on equipment replacements is restricted.

Performance compliance requires meeting mandatory measures on new systems or components being altered. There is no limit on the U-value of windows, and there is no restriction on changing fuel types, as long as the energy budget can be met.

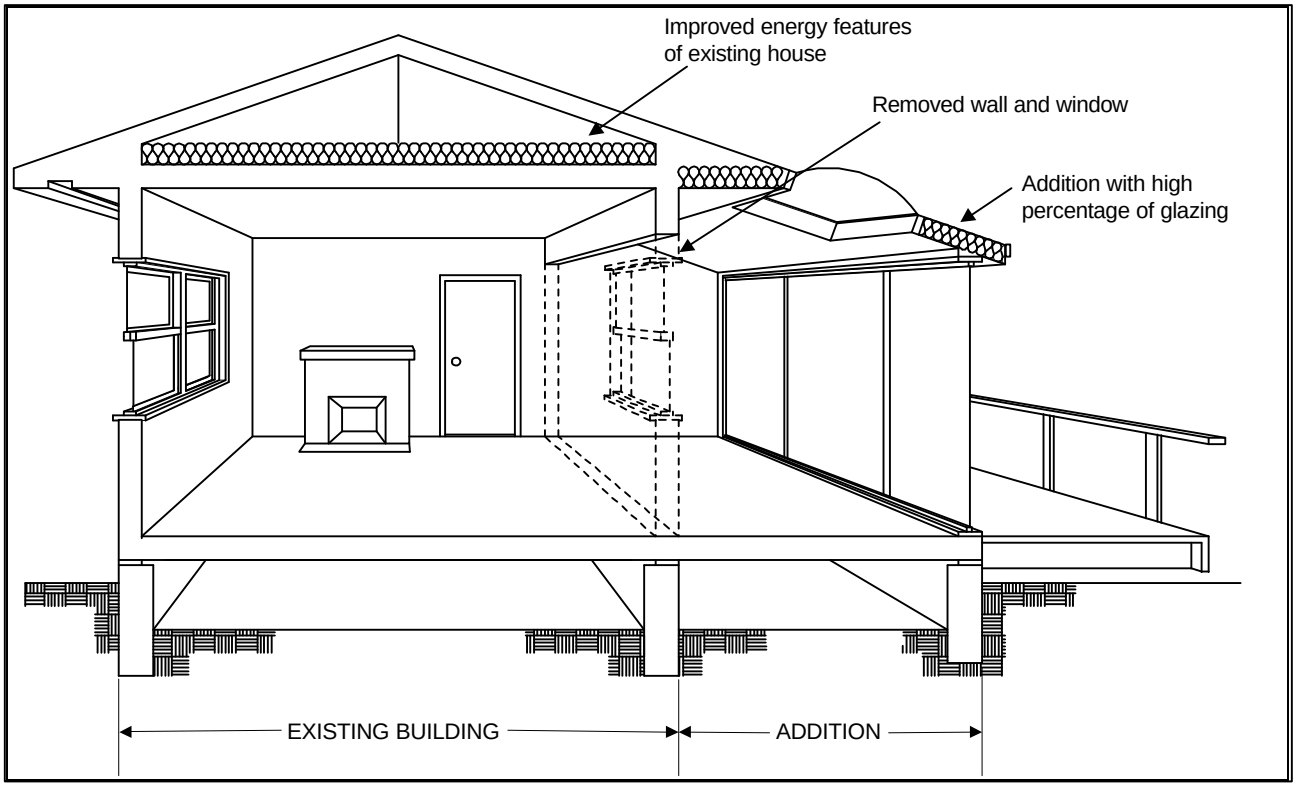

Figure 7-2: Compliance Option for Addition:
Performance Anaysis of the Existing House Plus Addition

REPAIRS

Repairs are not included in the definition of an alteration. Repairs are discussed in Section 7.6.

Examples

Additions, Alterations, Repairs

The Energy Efficiency Standards do not specify whether buildings damaged by natural disasters can be reconstructed to their original energy performance specifications. What requirements apply under these circumstances?

Buildings destroyed or damaged by natural disasters must comply with the energy code requirements in effect when the builder or owner applies for a permit to rebuild. The requirements that apply will depend on whether the scope of work is an addition, alteration or new building.

How can I determine if the scope of work is an addition, alteration or new building? And what requirements apply?

Section 100 of the standards indicates that the standards apply to buildings "for which an application for a building permit or renewal of an existing permit is filed (or required by law to be filed)." It comes down to whether the change is an "addition" or an "alteration."

Changes that require a building permit for an increase in conditioned floor area and conditioned volume are "additions." An addition meets the requirements found in Section 152(a).

Changes that require a building permit but do not add conditioned floor area and conditioned volume are "alterations." An alteration is any change to an existing building's water-heating, space-conditioning or lighting system, or to the envelope, that is not an addition. Alterations must meet any mandatory requirements that apply to the specific component being changed (Section 152(b)).

Rebuilding after a natural disaster (if a permit is required) will likely be either an alteration (Section 152(b)) or a new building (Section 100(d)). Requirements for new buildings apply if the local building official determines that the reconstruction is so extensive it is a new building.

Repairs and maintenance work *that do not require a building permit* are not covered by the standards.

Is a detached addition to an existing residence (with no breezeway) an addition or a new building?

This depends on the type of permit issued by the local building department. If the permit is for an addition, you can use compliance approaches approved for additions. If the permit type is for a new residential building, then you must use compliance approaches appropriate for new buildings.

Example 7-1: Alteration that increases conditioned floor area, but not volume

A 200 square foot sleeping loft is added to an existing building. The loft is being installed within an existing two-story high space in the conditioned envelope. No fenestration is added.

Since no conditioned volume is being added to the building, this is an alteration rather than an addition. As such, it only needs to comply with all applicable mandatory measures.

When modeling/accounting for greenhouse windows, which compliance approach allows the use of the "assumed" U-value of 0.75 for skylights and greenhouse windows? Do I use the entire glass area?

In *additions* and *alterations* only, you can use a 0.75 U-value for dual-glazed greenhouse windows or skylights with any compliance method. In new construction, the actual U-value of fenestration products is used for compliance documentation/calculations. For greenhouse windows, the area of glass is the rough opening.

If I remove a window from the existing house while doing an addition, can I re-use this window in the addition, or does it need to meet a certain U-value?

You can use this existing window in the addition; however, you must use a compliance approach that allows you to account for the actual U-value of this window, which may eliminate prescriptive compliance (see default values in Table 7-3). Window certification and labeling requirements (Section 116(a)) do not apply to these used windows.

7.2 COMPLIANCE ANALYSIS OF ADDITION ALONE

Any addition—that is, the sum of all new conditioned spaces and associated new exterior walls, ceilings and floors within the building—may be shown to meet the energy budget as a separate entity. This procedure does not involve the existing structure. The analysis may be performed using either a special prescriptive package according to the size of the addition or with an approved computer performance method.

Energy Code

Prescriptive (Section 152(a), (d)

Additions to existing residential buildings shall meet the requirements of Sections 111 through 118, Section 150, and either Section 152(a)1. or Section 152(a)2.

. . .

EXCEPTION No. 2 to Section 152(a): Any dual-glazed greenhouse window and dual-glazed skylight installed in an addition complies with Section 151(f)2.A.

. . .

EXCEPTION No. 4 to Section 152(a): When heating and/or cooling will be extended to an addition from the existing system(s), the existing equipment need not comply with Title 24, Part 6. The heating system capacity must be adequate to meet the minimum requirements of UBC Section 310.11.

1. ***Prescriptive Approach***. *Additions to existing buildings shall meet the following additional requirements:*

   A. *Additions up to 100 square feet shall not exceed 50 square feet of glazing and the glazing U-value shall not exceed 0.75; or*

   B. *Additions less than 1000 square feet shall meet all the requirements of Package D [Section 151(f) and Tables No. 1-Z1 through 1-Z16], except that the addition's total glazing area limit is the maximum allowed in Package D plus the glazing area that was removed by the addition and the wall insulation value need not exceed R-13.*

      EXCEPTION to Section 152 (a) 1.B.: If an addition is less than 500 square feet, glazing may have a U-value not to exceed 0.75 in lieu of any lower U-value required by the Package.

   C. *Additions of 1000 square feet or greater shall meet all the requirements of Package D [Section 151(f) and Tables No. 1-Z1 through 1-Z16].*

Compliance/ Plan Check

Prescriptive Addition Alone

Using prescriptive compliance to show compliance for an addition alone is the simplest (although least flexible) approach. This section discusses the application of prescriptive compliance to an addition. For more information on prescriptive compliance see Chapter 3, Part 3.3.

Documentation

Compliance of a prescriptive addition alone is documented on a:

1. Certificate of Compliance (CF-1R) (see Chapter 1), and
2. Mandatory Measures Checklist (MF-1R) (see Chapter 2).

Other compliance forms may be required to document, for example, water heating compliance.

Mandatory Measures

All mandatory measures apply to any new construction (see Chapter 2). For example, if a new space-heating system is being installed in the addition, the equipment must be certified, sizing calculations are required, ducted systems must meet insulation and installation requirements, and a setback thermostat is required (the exceptions apply only to performance compliance, not prescriptive compliance).

If a garage is being converted into conditioned space, the walls must meet current mandatory requirements. If the walls were previously insulated with R-11 they must be upgraded to R-13, or you can use a performance compliance approach (see Computer Method in this Part 7.2).

Envelope Measures

Envelope measures vary with the size of the addition (see Table 7-1).

Additions *up to 100 square feet* must meet mandatory insulation levels (R-13 wood frame walls, R-19 ceilings), and are limited to 50 square feet of glass with a maximum U-value of 0.75. This approach does not allow credit for glass removed because of the addition; however, compliance with the requirements for additions of less than 500 square feet is allowed, in which case credit for glazing removed is allowed.

Additions of *less than 500 square feet* meet the requirements of package D (Chapter 3) for the applicable climate zone (Appendix C) with the following exceptions: walls meet only the mandatory insulation level of R-13 in a wood frame; glass is limited to a maximum U-value of 0.75; glass area is limited to the percentage allowed by the package, plus any glass removed because of the addition.

Additions of *less than 1,000 square feet* meet the requirements of package D for the applicable climate zone with the following exceptions: walls meet only the mandatory insulation level of R-13 in a wood frame; glass area is limited to the percentage allowed by the package plus any glass removed because of the addition.

Additions of *1,000 square feet or more* meet all of the requirements of package D.

Dual-Glazed Skylights and Dual-Glazed Greenhouse Windows

Dual-glazed skylights or dual-glazed greenhouse windows are treated as though they have the U-value required for prescriptive compliance.

Dual-glazed skylights and dual-glazed greenhouse windows should be included in compliance calculations as a fenestration product with a U-value equivalent to the Package D requirement for the appropriate climate zone (or 0.75 for additions of less than 500 square feet).

Table 7-1: Prescriptive Compliance of Additions - Summary of Section 152(a)1 Requirements of the *Standards*

COMPONENT	*< 100 ft²*[2(1)]	< 500 ft²	≥ 500 but <1000 ft²	≥1,000 ft²
Insulation				
Ceiling	R-19	Package[2]	Package	Package
Wall[3]	R-13	R-13	R-13	Package
Floor	Mandatory[5]	Package	Package	Package
Fenestration				
Max. U-Value[4]	0.75	0.75	Package	Package
% of CFA	≤ 50 ft²	Pkg. + Removed[5]	Pkg. + Removed[5]	Package
Shading	N/A	Package	Package	Package
Space Heating[7] & Cooling	Mandatory[6] (No electric)	Package (No electric)	Package (No electric)	Package (No electric)
Water Heating[6]				
Replacement	N/A	N/A	N/A	N/A
Increase	See Table 7-2	See Table 7-2	See Table 7-2	See Table 7-2

1. This approach does not allow credit for glass removed. Compliance with the requirements for additions of less than 500 square feet is allowed, in which case credit for glazing removed is allowed.
2. Meet the component prescriptive requirement for Package D (see Chapter 3) and all mandatory requirements.
3. "Heavy Mass" and "Light Mass" walls may meet the Package D requirements for mass wall insulation instead of R-13 (see Chapter 3).
4. For addition and alteration compliance only, dual-glazed greenhouse windows and dual-glazed skylights are assumed to meet this requirement.
5. The Package D fenestration area plus the area of any glazing removed because of the addition.
6. All applicable mandatory measures must be met (see Chapter 2).
7. No electric resistance space heating may be installed.

Space-Conditioning Measures

If the existing heating and cooling system will serve the addition, there are no requirements that apply to the existing equipment. However, the enforcement agency may ask for verification that the capacity of the heating equipment is adequate for meeting the extra load created by the addition, in which case sizing/load calculations must be prepared.

NOTE:

Package D does not allow electric resistance space heating. When using a prescriptive approach for the addition alone, electric resistance or electric radiant space heating meets the heating system requirement only as an existing system already installed in an existing building.

If a new space-conditioning system is installed to serve the addition alone, or the addition and existing building, all mandatory measures shall apply (load calculations, certified equipment, duct insulation and installation, setback thermostat). No electric resistance space heating is allowed with prescriptive compliance. Gas or heat pump heating are permitted. If the equipment meets appliance certification requirements, as explained in Chapter 2, the efficiency is acceptable for prescriptive compliance.

Water Heating Measures

If an existing water heater is being replaced (including an increase in volume) only mandatory measures (certification, pipe insulation, tank insulation) apply (see Chapter 2, Part 2.4).

When a water heater is being added, increasing the number of water heaters in the building, see water heating below in this Part 7.2.

Energy Code

Performance Addition Alone (Section 152(a), (a)2)

Additions to existing residential buildings shall meet the requirements of Sections 111 through 118, Section 150, and either Section 152(a)1. or Section 152(a)2.

EXCEPTION No. 1 to Section 152(a): Existing structures with R-11 framed walls showing compliance with Section 152(a)2. (Performance Approach) are exempt from Section 150(c).

EXCEPTION No. 2 to Section 152(a): Any dual-glazed greenhouse window and dual-glazed skylight installed in an addition complies with Section 151(f)2.A.

. . .

EXCEPTION No. 4 to Section 152(a): When heating and/or cooling will be extended to an addition from the existing system(s), the existing equipment need not comply with Title 24, Part 6. The heating system capacity must be adequate to meet the minimum requirements of UBC Section 310.11.

. . .

2. ***Performance Approach****. Performance calculations shall meet the requirements of Section 151(a)-(e), pursuant to either A or B, below.*

A. The addition complies if the addition alone meets the combined water heating and space conditioning energy budgets.

Compliance/ Plan Check

Performance Addition Alone

Any addition may be analyzed alone using a computer method. Compliance for the addition is the same as showing compliance for a new building (see also Chapter 4). This part discusses performance compliance requirements unique to an addition. Refer also to the program compliance supplement provided by the vendor of the program you're using for further information on modeling additions alone.

Analyzing additions alone works well for relatively large additions with moderate window and skylight area. If an addition alone does not comply with the standards, improvements to the existing building may be necessary in order for the addition to comply (see Part 7.3).

Documentation

Compliance of an addition alone using a performance approach is documented on a:

1. Certificate of Compliance (CF-1R) (see Chapter 1),
2. C-2R (computer, see Chapter 5) and
3. Mandatory Measures Checklist (MF-1R) (see Chapter 2).

Mandatory Measures

All mandatory measures apply to any new construction. For example, if a new space-heating system is being installed in the addition, the equipment must be certified, sizing calculations are required, ducted systems must meet insulation and installation requirements, and a setback thermostat is required unless (1) the system type is shown in the Exception to Section 150(i) and (2) a non-setback thermostat is modeled . All mandatory measures are explained in Chapter 2.

If a garage is being converted into conditioned space, the walls must meet current mandatory requirements. If the walls were previously insulated with R-11, compliance must be achieved with the existing R-11 insulation.

Envelope Measures

Envelope compliance is based on prescriptive Package D with credit for more energy efficient measures and penalty for less efficient measures. The only limitation is minimum mandatory measures: ceilings must have a weighted average equivalent to R-19 installed between wood framing, and framed walls must have a weighted average equivalent to R-13 installed between wood framing (except as noted above for existing walls insulated to R-11).

Dual-Glazed Skylights or Dual-Glazed Greenhouse Windows

Dual-glazed skylights or dual-glazed greenhouse windows are treated as though they have the U-value required for compliance with package D.

Any dual-glazed skylight or dual-glazed greenhouse window area should be included in compliance calculations as a fenestration product with a U-value equivalent to the Package D maximum U-value requirement (see Chapter 3, Part 3.4).

Space-Conditioning Measures

If the existing heating and cooling system will serve the addition, there are no requirements that apply to the existing equipment, and the effect is neutral. The computer model should show equipment with an efficiency equal to 78 percent AFUE central furnace and 10 SEER cooling, with R-4.2 ducts in the attic, regardless of the actual conditions.

The enforcement agency may ask for verification that the capacity of the heating equipment is adequate for meeting the extra load created by the addition, in which case sizing/load calculations must be prepared.

If a new space-conditioning system is installed to serve the addition alone, or the addition and existing building, all mandatory measures shall apply (load calculations, certified equipment, setback thermostat, duct insulation and installation). If a new, high efficiency HVAC distribution system is used to serve the addition or the addition and the existing building, that system may be modeled to receive energy credit subject to diagnostic testing and verification of proper installation by a HERS rater (see Chapter 4).

If a non-central space-conditioning system of one of the following types is installed:

Gravity-gas wall heaters
Gravity floor heaters
Gravity room heaters
Non-central electric heaters
Room air conditioners
Room air conditioner heat pumps

then a setback thermostat is not required if a “no setback” condition is modeled if a setback thermostat is not installed.

New space-conditioning equipment is modeled using its actual characteristics. If the new equipment serves the existing building as well as the addition, the full capacity can be modeled.

Energy Code

Water Heating, Addition Alone (Section 152(a))

EXCEPTION No. 3 to Section 152(a): If the addition will increase the total number of water heaters in the building, one of the following types of water heaters may be installed to comply with Section 152(a)1. or Section 152(a)2.A, and Section 152 (c):

(1) A gas storage non-recirculating water heating system that does not exceed 50 gallons capacity; or

(2) If no natural gas is connected to the building, an electric storage water heater that does not exceed 50 gallons capacity, has an energy factor not less than 0.90; or

(3) A water heating system determined by the Executive Director to use no more energy than the one specified in (1) above; or if no natural gas is connected to the building, a water heating system determined by the Executive Director to use no more energy than the one specified in (2) above.

For prescriptive compliance with Section 152(a)1., the water heating systems requirement in Section 151(f)8. shall not apply. For performance compliance for the addition alone, only the space conditioning budgets of Section 151(b)2. shall be used; the water heating budgets of Section 151(b)1. shall not apply.

The performance approach for the existing building and the addition in Section 152(a)2.B may be used to show compliance, regardless of the type of water heater installed.

Compliance/ Plan Check

Water Heating, Addition Alone

When a new water heater is added as part of an addition, and it increases the total number of water heaters in the entire building, the standards allow addition alone compliance only when:

1. Installing a gas water heater, 50 gallons or less, non-recirculating; or one that uses equal or less energy (see Table 7.2); or
2. If there is no natural gas connected to the building, installing a 50-gallon or less electric water heater with a 0.90 Energy Factor; or one that uses equal or less energy (see Table 7-2), and
3. The water-heater system is not included in the compliance calculations.

Special Documentation

When there is an increase in water heaters meeting the conditions described in 1-3 above or from Table 7-2, special water heating documentation requirements apply. The systems must be energy neutral in the addition alone compliance. This is achieved by the following:

Prescriptive Compliance	No Water Heating Calculations required
Computer Compliance	Model "Standard: water heater - 50 gallon gas, nonrecirculating, 0.53 energy factor, standard distribution

The C-2R must reflect equivalent water heating energy use for the “standard” and “proposed” building (compliance margin 0).

Actual system features should be noted or written on the CF-1R, under Water-Heating Systems or Special Features.

Other Options

To take credit for a more efficient added water heater, or for a water-heating system with features other than those outlined in Table 7-2, you must use an existing-plus-addition compliance approach for an increase in the number of water heaters in the entire building.

Addition Alone

Construction

Make note of any construction requirements on the plans and Certificate of Compliance (CF-1R).

For detailed construction guidelines and documentation requirements for the builder, see Chapters 2 and 3.

As applicable, an Installation Certificate (CF-6R) for equipment and fenestration products, must be completed and signed, as well as an Insulation Certificate (IC-1). Construction must be equal or better to information on the Certificate of Compliance (CF-1R).

Addition Alone

Inspection

The inspector should make note of construction indicated on the CF-1R.

Before making a visual inspection, check the Certificate of Compliance (CF-1R) and compare it to the Installation Certificate (CF-6R) for equipment and fenestration products, and the Insulation Certificate (IC-1) if there are any building envelope alterations.

For more detailed inspection guidelines, see Chapters 2 and 3.

7.3 Compliance Analysis Using the Existing-Plus-Addition Method

Energy Code

Performance, Existing-Plus-Addition Approach. (Section 152(a)

Additions to existing residential buildings shall meet the requirements of Sections 111 through 118, Section 150, and either Section 152(a)1. or Section 152(a)2.

EXCEPTION No. 1 to Section 152(a): Existing structures with R-11 framed walls showing compliance with Section 152(a)2. (Performance Approach) are exempt from Section 150(c).

EXCEPTION No. 2 to Section 152(a): Any dual-glazed greenhouse window and dual-glazed skylight installed in an addition complies with Section 151(f)2.A.

. . .

EXCEPTION No. 4 to Section 152(a): When heating and/or cooling will be extended to an addition from the existing system(s), the existing equipment need not comply with Title 24, Part 6. The heating system capacity must be adequate to meet the minimum requirements of UBC Section 310.11.

…

Table 7-2: Additions Involving an Increase in the Number of Water Heaters

The following water heating systems have been determined to be equivalent to Section 152(a), Exception No. 3. See special documentation requirements above.

A water heater with the following characteristics may be installed in an addition to a building with a *natural gas connection*, without credit/penalty in compliance calculations:

Fuel/Type	Capacity	Efficiency	Distribution
Gas/Storage	50 gallon	≥ 0.53 EF	Standard
Gas/Storage	75 gallon	≥ 0.52 EF	PI
Gas/Storage	75 gallon	≥ 0.52 EF	POU
Gas/Storage	75 gallon	≥ 0.52 EF	HWR
Gas/Storage	75 gallon	≥ 0.52 EF	WSB
Gas/Instantaneous	N/A	≥ 0.62 EF	Standard

A water heater with the following characteristics may be installed in an addition to a building with *no natural gas connection*, without credit/penalty in compliance calculations:

Fuel/Type	Capacity	Efficiency	Distribution
Electric/Storage	50 gallon	> 0.90 EF	Standard
Electric/Storage	50 gallon	> 0.86 EF	POU
Electric/Storage	50 gallon	> 0.86 EF	HWR
Electric/Storage	50 gallon	> 0.86 EF	WSB
Electric/Storage	50 gallon	> 0.86 EF	PI
Electric/Storage	50 gallon	> 0.86 EF	R/D & HWR
Electric/Storage	75 gallon	> 0.95 EF	Standard
Electric/Instantaneous	N/A	> 98% RE	Standard

EF = Energy Factor
RE = Recovery Efficiency

Distribution Systems (see Chapter 6, Parts 6.1 and 6.6, for complete information on distribution system installation criteria):

Standard:	No pumps, R-4 insulation on first 5 feet of hot and cold water pipes
POU:	Point of Use
PI:	Pipe Insulation
HWR:	Hot Water Recovery System
WSB:	Wood Stove Boiler
R/D & HWR:	Recirculation system with a Demand control, combined with Hot Water Recovery

…

2. ***Performance Approach****. Performance calculations shall meet the requirements of Section 151(a)-(e), pursuant to either A or B, below.*

. . .

B. The addition complies if the energy efficiency of the existing building is improved such that the source energy consumption of the improved existing building and the addition is equal to or less than that of the unimproved existing building plus an addition that complies with the applicable energy budget.

Compliance/ Plan Check

Existing-Plus-Addition

The most flexible method for showing compliance for an addition is to consider the entire existing building along with the addition. By comparing building energy consumption before and after the remodel, credit may be taken for improvements to the energy efficiency features in the existing building. Compliance is shown using an approved computer compliance program. This part discusses performance compliance requirements unique to an addition. Refer also to the program compliance supplement provided by the vendor of the program you're using for further information on modeling additions.

Documentation

Compliance of an existing-plus-addition is documented on a Certificate of Compliance (CF-1R) (see Chapter 1) two C-2Rs (one for the existing and one for the existing-plus-addition), and a Mandatory Measures Checklist (MF-1R) (see Chapter 2).

Mandatory Measures

All mandatory measures apply to any new construction. For example, if a new space-heating system is being installed in the addition, the equipment must be certified, sizing calculations are required, ducted systems must meet insulation and installation requirements, and a setback thermostat is required unless (1) the system type is shown in the Exception to Section 150(i) and (2) a non-setback thermostat is modeled. All mandatory measures are explained in Chapter 2.

If a garage is being converted into conditioned space, the walls must meet current mandatory requirements. If the walls were previously insulated with R-11, compliance must be achieved with the existing R-11 insulation.

Envelope Measures

Envelope compliance for the addition is based on prescriptive Package D with credit for more energy efficient measures and penalty for less efficient measures. The only limitation is minimum mandatory measures for new construction: ceilings must have a weighted average equivalent to R-19 installed between wood framing, and framed walls must have a weighted average equivalent to R-13 installed between wood framing (except as noted above for existing walls insulated to R-11).

Dual-Glazed Skylights or Dual-Glazed Greenhouse Windows

Dual-glazed skylights or dual-glazed greenhouse windows are treated as though they have the U-value required for compliance with package D.

Any new dual-glazed skylight or dual-glazed greenhouse window area should be included in compliance calculations as a fenestration product with a U-value equivalent to the Package D maximum U-value requirement for the appropriate climate zone (see Chapter 3, Part 3.4).

Space Conditioning Measures

If the existing heating and existing cooling system will serve the addition, there are no requirements that apply to the existing equipment, and the effect is neutral. The computer model should show equipment with an efficiency equal to 78 percent AFUE central furnace and 10 SEER cooling, with R-4.2 ducts in the attic, regardless of the actual conditions.

The enforcement agency may ask for verification that the capacity of the heating equipment is adequate for meeting the extra load created by the addition, in which case sizing/load calculations must be prepared.

If a new space-conditioning system is installed to serve the addition alone, or the addition and existing building, all mandatory measures shall apply (load calculations, certified equipment, duct insulation and installation, setback thermostat). If a non-central space-conditioning system of one of the following types is installed:

- Gravity-gas wall heaters
- Gravity floor heaters
- Gravity room heaters
- Non-central electric heaters
- Room air conditioners
- Room air conditioner heat pumps

then a setback thermostat is not required, but a "no setback" condition must be modeled.

New space-conditioning equipment is modeled using its actual characteristics. If the new equipment serves the addition alone, it is necessary to determine a weighted average efficiency based on the floor area served by each system.

If a new, high efficiency HVAC distribution system is used to serve the addition or the addition and the existing building, that system may be modeled to receive energy credit subject to diagnostic testing and verification of proper installation by a HERS rater (see Chapter 4).

EXISTING BUILDING ASSUMPTIONS

When performing an existing-plus-addition analysis, determine existing building conditions according to Table 7-3 which lists default assumptions for existing buildings. These default assumptions should be used unless actual field conditions can be documented.

NOTE:

The same values should be modeled for the existing house in both the existing and the existing-plus-addition analyses unless specific improvements, including those previously installed, can be documented. To take credit for past improvements, documentation verifying the improvement must be presented to the building department.

Existing Building Constructed Completely Before 1978

If an existing building was constructed before 1978, and the building has not had any additions constructed since 1978, assumptions about the existing insulation levels, fenestration U-values and solar heat gain coefficients, space-conditioning systems and water-heating systems may be made as summarized in Table 7-3 in lieu of field inspection or as-built drawings.

Construction that is known to be more energy efficient than the listed default values must be assumed to be original construction in the existing house (assumed in both "existing" and "existing-plus-addition" documentation), unless a legitimate written or visual record of the improvement(s) can be provided by the owner. Legitimacy is at the discretion of the local building official. Once an improvement is shown not to be the original construction, assume the originally constructed value in this "existing" building documentation, and the improved construction in the "existing-plus-addition" documentation.

Existing Buildings Constructed from 1978 to the Present

All new residential construction and additions built in California from 1978 to the present were required to comply with the standards. Therefore, some minimum values must be assumed for existing buildings constructed during this period.

Table 7-3: Default Assumptions for Existing Buildings[1]

Feature	Default Assumption for Year Built: Before 1978	1978 to 1983	1984 to 1991	1992 to 1998
INSULATION (U-VALUE)				
Roof	0.076	0.047	0.047	0.047
Wall	0.386	0.096	0.096	0.088
Raised Floor - Crawlspace	0.097	0.097	0.097	0.037
Raised Floor - No Crawlspace	0.239	0.239	0.239	0.097
Slab Edge (F2)	0.72	0.72	0.72	0.72
Ducts	R-2.1	R-2.1	R-2.1	R-4.2
LEAKAGE				
Building (SLA)	4.9	4.9	4.9	4.9
Ducts	28%	28%	28%	28%
FENESTRATION				
U-value	Use Table 1-D, Title 24, Part 6, Section 116 for all vintages			
SHGC	Use Table 1-E, Title 24, Part 6, Section 116 for all vintages			
Shading Device	Use current value for installed device			
SPACE HEATING EFFICIENCY[2]				
Gas Furnace (Central), AFUE	0.75	0.78	0.78	0.78
Heat Pump, HSPF	5.6	5.6	6.6	6.6
Electric Resistance, HSPF	3.41	3.41	3.41	3.41
SPACE COOLING EFFICIENCY				
All Types, SEER[2]	8.0	8.0	8.9	9.7
WATER HEATING				
Energy Factor	0.53	0.53	0.53	0.53
Rated Input, MBH[2]	28.0	28.0	28.0	28.0

1. Based on historic data and utility (Residential Conservation Service) conservation programs.
2. AFUE = Annual Fuel Utilization Efficiency
   HSPF = Heating Seasonal Performance Factor
   SEER = Seasonal Energy Efficiency Ratio
   MBH = 1,000 Btu/hr

If no actual information is available, existing buildings constructed in or after 1978 or buildings with previously constructed additions constructed in or after 1978 may be assumed to have the values listed in Table 7-3 for insulation, fenestration U-values and solar heat gain coefficients, space-conditioning systems and water-heating systems.

Select the values from the table column that corresponds to the year that the building or previous addition was constructed.

NOTE:

Buildings with previously constructed additions may have made improvements to the older parts of the building at the time of that addition. Therefore, if the building or an addition was constructed after 1978, use the assumptions about the existing building shown for the year the addition was constructed.

Floor and fenestration areas must always be accurately calculated in both the existing and the existing-plus-addition analyses, especially for features where improvements are being made.

EXISTING-PLUS-ADDITION

The second part of the documentation is the analysis of the existing building plus the addition. It is in this part of the analysis that any energy efficiency measure improvements to the existing building (restricted as indicated in "existing building assumptions") are assumed. Other than the improvements, the remainder of the existing building is assumed to consist of the same features as were assumed for the first part of the analysis.

Compliance/ Plan Check

Existing-Plus-Addition

APPROVED COMPUTER METHODS: EXISTING-PLUS-ADDITION

To show compliance with this approach you need to complete the following steps:

1. Collect and document information on the existing building before the remodel (see Table 7-3 for default assumptions), including:

   - Floor, ceiling, wall and fenestration areas
   - Insulation levels
   - Fenestration U-values, shading and orientations
   - HVAC equipment efficiencies
   - Water-heating systems
   - Duct leakage change (if any)
   - Other data as needed

2. Analyze the energy performance of the existing building before any changes take place using an approved computer method. Use default assumptions listed in Table 7-3 unless actual field conditions can be documented.

3. Analyze the energy performance of the existing building plus the addition, including any changes to the existing building.

   When using this compliance approach it is important to take into account all changes in fenestration, especially windows and skylights which are removed from or added to the existing house as part of the remodel.

   Wall, roof and floor areas also become more critical in this context, because credit may be gained by insulating previously uninsulated parts of the building envelope.

NOTE:

If the energy budget for the existing-plus-addition is greater than its energy use, then the addition complies automatically and no additional calculations are required.

4. Calculate the ratio, ***F***, between the *floor area of the existing building* and the *floor area of the existing-plus-addition*:

$$F = \frac{(A_e)}{(A_{e+a})}$$

Where:

A_e = Total conditioned floor *area* of the *existing* building, in square feet.

A_{e+a} = Total conditioned floor *area* of the remodeled *existing-plus-addition* building, in square feet.

5. Using the energy budget/standard design and energy use/proposed design values calculated in the two computer analyses, determine whether the energy use of the existing-plus-addition is equal to or less than the adjusted energy budget for the existing-plus-addition as follows:

$EU_{e+a} \leq EB_{e+a} + (F(EU_e - EB_e))$

Where:

EB_{e+a} = *Energy budget, existing-plus-addition*, in kBtu/yr-ft^2 (from the computer run on the existing-plus-addition building).

F = *Floor* area ratio (from step 3 above).

EU_e = *Energy use, existing* building, in kBtu/yr-ft^2.

EB_e = *Energy budget, existing* building, in kBtu/yr-ft^2.

NOTE:

If (EU_e - EB_e) is less than zero (0), use zero in the calculation.

Examples

Existing-Plus-Addition

Example 7-2: Existing-Plus-Addition Analysis Using an Approved Computer Method

An additional 590 ft^2 is being added to an existing 2,389 ft^2 single family house. To demonstrate energy compliance for the addition using the existing-plus-addition computer method requires the following steps:

1. Using an approved computer method, analyze the existing building before the addition. See "Existing Building Assumptions" above for more information.

   The energy budget of the existing building is calculated as 45.58 kBtu/yr-ft^2, while the energy use of the existing building is 108.39 kBtu/yr-ft^2.

2. Perform a second computer analysis for the entire existing-plus-addition, including any changes to the existing building.

   The energy budget of the existing-plus- addition is calculated as 42.37 kBtu/yr-ft^2, while the energy use of the existing-plus-addition is 88.21 kBtu/yr-ft^2.

3. Calculate the floor area ratio:

   F = 2,389/(2,389 + 590) = 0.802

4. Use the floor area ratio, the calculated energy budget and the energy use values for both analyses to calculate the adjusted energy budget for the existing-plus-addition:

   $EB_{e+a} + (F)(EU_e - EB_e)$

   = 42.37 + (0.802)(108.39 - 45.58)

   = 42.37 + (0.802)(62.81)

   = 92.74 kBtu/yr-ft

5. Since the energy use of the existing-plus-addition (88.21 kBtu/yr-ft^2) is less than its adjusted energy budget (92.74 kBtu/yr-ft^2), the addition complies.

Construction

Existing-Plus-Addition

Make note of any construction requirements on the plans and Certificate of Compliance (CF-1R), particularly improvements to the existing building necessary to achieve compliance with the standards.

For detailed construction guidelines and documentation requirements for the builder, see Chapters 2 and 3.

As applicable, an Installation Certificate (CF-6R) for equipment and fenestration products must be completed and signed, as well as an Insulation Certificate (IC-1). Construction must be equal or better to information on the Certificate of Compliance (CF-1R).

Inspection

Existing-Plus-Addition

The inspector should make note of any improvements required to achieve compliance, as indicated on the CF-1R. The plan checker should have either verified proof of past energy efficiency improvements, or have indicated on

the CF-1R under "special features" any improvements that must be field verified. Proposed construction that is needed to achieve compliance will be indicated on the CF-1R.

For detailed inspection guidelines and documentation requirements, see Chapters 2 and 3.

Before making a visual inspection, check the Certificate of Compliance (CF-1R) and compare it to the Installation Certificate (CF-6R) for equipment and fenestration products, and the Insulation Certificate (IC-1) if there are any building envelope alterations.

Check for special features that require diagnostic testing - reductions in building leakage, more energy efficient duct location; and duct leakage reduction.

7.4 SPACE-CONDITIONING EQUIPMENT FOR ADDITIONS

Energy Code

Space Heating/Cooling

Section 152(a)

Additions to existing residential buildings shall meet the requirements of Sections 111 through 118, Section 150, . . .

EXCEPTION No. 4 to Section 152(a): When heating and/or cooling will be extended to an addition from the existing system(s), the existing equipment need not comply with Title 24, Part 6. The heating system capacity must be adequate to meet the minimum requirements of UBC Section 310.11.

Section 152(c)

Electric resistance water heating or space conditioning systems may be installed in or in conjunction with an addition only if the electric resistance system meets the applicable energy budget(s) from Section 151(b) pursuant to Section 152(a)2.

Compliance/
Plan Check

Heating and Cooling Equipment

There are two options for sizing and installing heating, ventilation and air-conditioning (HVAC) equipment additions. The first is to perform design heating and cooling load calculations for the addition by itself and to install separate HVAC equipment for the addition that does not connect to the existing HVAC system.

The second option is to calculate heating and cooling loads for the existing-plus-addition and install HVAC equipment for the whole dwelling unit that meets those loads. It is acceptable to use existing heating equipment to heat the existing-plus-addition, provided the existing equipment meets or exceeds the design heating load per *UBC* requirements (see Chapter 2, Part 2.2).

Cooling load calculation requirements are specified in the standards when cooling equipment is installed. If you are using an existing air conditioner to cool an addition, cooling load calculations for the existing-plus-addition are recommended.

NOTE:

When existing heating and/or cooling equipment serves an addition, the existing equipment need not comply with the mandatory or compliance requirements of the standards.

Electric Resistance Space Heating

Electric resistance space heating is only allowed in an addition if a performance compliance approach (computer method) is used and the addition or existing-plus-addition complies with the applicable energy budget.

7.5 ALTERATIONS

Energy Code

Alterations, Prescriptive (Section 152(b))

Alterations to existing residential buildings or alterations in conjunction with a change in building occupancy to a low-rise residential occupancy shall meet either 1 or 2 below [see "Alterations, Performance" for 2].

1. *Prescriptive Approach. The altered component and any newly installed equipment serving the alteration, shall meet the applicable requirements of Sections 110 through 118 and 150; and*

   A. *Alterations that add fenestration area to a building shall be limited to a maximum 0.75 U-value for new fenestration products.*

   B. *New space conditioning systems or components shall: (i) meet the requirements of Section 150(h) and (i); and (ii) be limited to natural gas, liquefied petroleum gas, or the existing fuel type unless it can be demonstrated that the source energy use of the new system is more efficient than the existing system.*

   C. *New service water heating systems or components shall: (i) meet the requirements of Sections 150; and (ii) be limited to natural gas, liquefied petroleum gas, or the existing fuel type unless it can be demonstrated that the source energy use of the new system is more efficient than the existing system.*

Compliance/ Plan Check

Prescriptive Alterations

Alterations are remodels or replacements that do not result in an increase in a building's conditioned volume and conditioned floor area. Alterations include changes to the building envelope, space-conditioning system, water-heating system and lighting system. In any alteration:

- All mandatory requirements apply to the component being changed.
- Any new fenestration products must have a U-value equal to or less than 0.75.
- Equipment replacements that involve a change in fuel type are restricted, as described below.

Documentation

Compliance for a prescriptive alteration is documented on a:

1. Certificate of Compliance (CF-1R) (see Chapter 1) and
2. Mandatory Measures Checklist (MF-1R) (see Chapter 2).

MANDATORY MEASURES

Any building or equipment alteration must comply with the relevant mandatory measures contained in Sections 111 - 118, and Section 150 of the standards (see Chapter 2 for a full discussion). The unique application of mandatory measures to alterations is discussed below.

FENESTRATION REQUIREMENTS

Any added (not replaced) window, skylight, glass door or other fenestration installed as must have a rated U-value of 0.75 *or less* (see Chapter 2, Part 2.3 and Chapter 7, Part 7.5 on Fenestration). For the purposes of compliance for alterations, dual-glazed greenhouse windows and dual-glazed skylights may be assumed to meet this requirement (see Example 7-5).

Fenestration products that are replaced or repaired are not required to meet a maximum U-value level (see Examples 7-3 and 7-4).

Examples

Alterations—Fenestration

If I am doing an alteration, can I move an existing window to another location? Does it need to meet a 0.75 U-value?

Once you move the window to a location where a window did not previously exist, it must meet the 0.75 U-value requirement because it is added fenestration rather than a window replacement.

Example 7-3: Alteration with New Windows

An existing building has all single-pane, windows. All of the windows will be replaced, and one wall will be altered to have french doors in place of an existing window.

The 0.75 U-value requirement applies only to the window replaced with french doors. The french door must have a 0.75 or lower U-value. There is no maximum U-value for the remainder of the windows being replaced. All of the installed fenestration must meet applicable mandatory measures indicated in Chapter 2, Part 2.3.

Example 7-4: Replacing windows

An existing building has all single pane, metal frame windows. A proposed remodel will replace all the windows, no other work is being done as part of the remodel.

Since there is no added fenestration, the 0.75 U-value requirement does not apply. The installed fenestration must meet applicable mandatory measures listed in Chapter 2.

Example 7-5: Adding a greenhouse window to an existing building

An existing building has all single-pane, wood frame windows. Two double-pane metal frame greenhouse windows will be added as part of a remodel. For the purposes of alterations and additions, double-pane greenhouse windows may be treated as though they have a U-value equal to 0.75. Since greenhouse windows and some skylights add conditioned volume, but do not add conditioned floor area, this remodel is considered an alteration rather than an addition. All applicable mandatory measures must be met.

Compliance/ Plan Check

Alterations, Space Heating/Cooling

Changing space-conditioning equipment fuel types is restricted in the following way:

Existing Fuel Source	Acceptable Replacement Equipment Fuel Source(s)
Electric	Electric, natural gas, or equipment with efficiency equal or better than existing system*
Natural gas	Natural gas, or equipment with efficiency equal or better than existing system*
LPG	Liquefied petroleum gas, natural gas, or equipment/ system with efficiency equal or better than existing system*

* Proof that equipment has an efficiency that is equal to or better than the existing system can be demonstrated by an approved compliance program or other approved alternative calculation method (see Chapter 7) to compare the energy use of the existing system to the proposed system.

Changing from gas or liquefied petroleum gas to electric is not permitted with prescriptive compliance. Existing-plus-alteration compliance, explained below, is required to make such a fuel source change.

Compliance with all applicable mandatory measures is required (see below and Chapter 2).

Examples

Alterations—HVAC

If I am going to replace the heating system(s) in an existing residential building, what requirements of the standards apply? Can I change fuel types (from electric to gas)?

This scope of work will either be considered an alteration or a repair by the building department. If it is an alteration, the following mandatory requirements apply (Chapter 2):

- Certification of the equipment (not applicable to electric resistance heating equipment) (Section 111).
- Duct construction and insulation if new ducts are being installed (Section 150(m)).
- Setback thermostat requirements apply if the thermostat is replaced, unless the equipment is a gravity gas wall heater, gravity floor or room heater, noncentral electric heater, room

air-conditioners, or room air conditioner heat pump (Section 150(l)). (Existing-plus-alteration compliance is not needed for alterations).

- The building department can request sizing calculations (Section 150(h)).
- Changing fuel types is restricted as described above.

If the project is a repair, no standards requirements apply. Federal or state appliance certification requirements still apply.

Example 7-6: Alteration with New HVAC System

A new central gas furnace is to replace an existing gas furnace in a residence. New duct work will be installed, but no other changes are being made to the existing building.

The only energy requirement for this alteration is that it must meet all applicable mandatory measures for the new furnace and duct work as listed in Chapter 2.

Compliance/ Plan Check

Alterations—Water Heating

Water Heating

If a water heater is replaced in an existing building, the new water heater must meet applicable mandatory measures (see below and Chapter 2).

Examples

Alterations—Water Heating

What are the compliance requirements for replacing water heaters that are not part of an addition? What if the replacement unit is bigger? Can I change fuel types?

Replacement water heaters (which can be larger) must be certified and, if new pipes are installed, have the appropriate pipe insulation as required by Section 150(j).

Changing fuel types is restricted as described above.

If the project is a repair, no standards requirements apply. Federal or state appliance certification requirements still apply.

Energy Code

Alterations, Performance, Alteration Alone (Section 152(b)2)

A. The altered components shall meet the applicable requirements of Sections 110 through 118 and 150; and

B. Either:

i. The permitted space alone, which shall be a minimum of the square footage of the room in which the alteration is made, shall comply with Section 151; or

EXCEPTION to 152(b)2.B.: When the existing fuel type is electric, the existing or replacement equipment for heating, cooling and/or domestic water heating of the proposed building shall be assumed to be the same fuel type as the standard building.

Compliance/ Plan Check

Alterations Alone, Performance

Any alteration may be analyzed alone using a computer method. This option is included for projects where it is not feasible for new fenestration products to achieve a 0.75 or lower U-value, or where a change in space-conditioning fuel type is desired. The compliance requirements are the same as showing compliance for a new building, except that the compliance is being shown for a smaller area of the building.

Refer to the program compliance supplement for further modeling information. This section discusses the application of performance compliance to an alteration. For more information on compliance with a computer method, see Chapter 5.

Documentation

Compliance for a performance alteration alone is documented on a:

1. Certificate of Compliance (CF-1R) (Chapter 1),
2. Mandatory Measures Checklist (MF-1R) (Chapter 2), and
3. Computer Summary (C-2R) (Chapter 5).

Envelope Compliance

There is no maximum U-value requirement for window replacements with this compliance approach.

Note:

There is no special allowance for greenhouse windows and skylights with this compliance approach, as there is for prescriptive additions. See Chapter 2 for the default U-value of skylights and greenhouse windows.

Energy Code

Alterations, Performance, Existing-Plus-Alteration (Section 152(b)2)

A. The altered components shall meet the applicable requirements of Sections 110 through 118 and 150; and

B. Either:

. . .

ii. The energy efficiency of the existing building shall be improved so that the building meets the energy budget in Section 151 that would apply if the existing building was unchanged and the permitted space alone complied with i. The permitted space shall be a minimum of the square footage of the room in which the alteration is made.

EXCEPTION to 152(b)2.B.: When the existing fuel type is electric, the existing or replacement equipment for heating, cooling and/or domestic water heating of the proposed building shall be assumed to be the same fuel type as the standard building.

Compliance/ Plan Check

Existing-Plus-Alterations, Performance

The most flexible method for showing compliance for an alteration is to consider some portion of the existing building along with the alteration. This option is included for projects where it is not feasible for fenestration products to achieve a 0.75 or lower U-value (e.g., moving existing windows from one location to a new location), or where a change in space-conditioning fuel type is desired. The compliance requirements are the same as showing compliance for an existing-plus-addition, except that the compliance may be shown for a smaller area of the building (at least the room where the alteration is occurring must be included in the compliance). By comparing building energy consumption before and after the remodel, credit may be taken for improvements to the energy efficiency features in the existing building.

Compliance is shown using an approved computer compliance program. Refer to the program compliance supplement for further information on modeling "existing-plus-addition" which has application to existing-plus-alteration. This discussion covers the application of performance compliance to an alteration. For more information on computer compliance, see Chapter5.

Documentation

Compliance of an existing-plus-alteration is documented on a:

1. Certificate of Compliance (CF-1R) (see Chapter 1),
2. Mandatory Measures Checklist (MF-1R) (see Chapter 2), and
3. Two C-2Rs (one for the existing and one for the existing-plus-alteration for computer compliance (see also Chapter 5).

Mandatory Measures

All mandatory measures apply to any new construction. For example, if a new space-heating system is being installed in the alteration, the equipment must be certified, sizing calculations may be required, ducted

systems must meet insulation and installation requirements, and a setback thermostat is required unless the system type is shown in the exception to Section 150(i) and a non-setback thermostat is modeled. All mandatory measures are explained in Chapter 2.

Refer to the program compliance supplement for further modeling information. This section discusses the application of performance compliance to an alteration. For more information on computer compliance, see Chapter 5.

Envelope Compliance

There is no maximum U-value requirement for window replacements with this compliance approach.

Note:

There is no special allowance for greenhouse windows and skylights with this compliance approach, as there is for prescriptive additions. See Chapter 2 for the default U-value of skylights and greenhouse windows.

Existing Building Assumptions

See Part 7.3, pages 7-13 through 7-15.

Examples

Existing-Plus-Alteration

One of the performance (computer) options for showing compliance for alterations is to show that the building meets the energy budget that would apply if the permitted space complied and the remainder of the building was unchanged. Can you explain what this means and the process for showing compliance?

This process involves four steps and three separate computer runs:

1. Model the building or a part of the building before any alterations to determine the energy use (proposed design) of the existing building.
2. Model the altered space to determine the energy budget (standard design) of the alteration alone.

2. Calculate the energy budget for the *building* as:

$$\frac{(A_e \times PD_e) + (A_a \times SD_a)}{A_{e+a}} = \text{Energy Use Goal}$$

Where:

A_e = Area of the existing building before the proposed alteration (from 1.)

PD_e = Proposed design of the existing building before the proposed alteration (from 1.)

A_a = Area of the proposed alteration (from 2.)

SD_a = Standard design for the proposed alteration (from 2.)

A_{e+a} = Area of the existing building plus proposed alteration area

4. Model the building, including the proposed alteration, along with any improvements to the existing building. If the proposed design is less than or equal to the energy use goal (from 3.), the alteration complies.

For example, 250 ft² of an existing 1,500 ft² building is being altered. In step 1, computer modeling shows that the existing building uses 25.4 kBtu/ft². In step 2, the proposed alteration's energy budget is 14.2 kBtu/ft².

Calculate the energy use goal as:

$$\frac{(1{,}250 \times 25.4) + (250 \times 14.2)}{(1{,}250 + 250)} = 23.5$$

23.5 kBtu/ft² energy use goal

Construction

Alterations

Make note of any construction requirements on the plans and Certificate of Compliance (CF-1R).

For detailed construction guidelines and documentation requirements for the builder, see Chapters 2 and 3.

As applicable, an Installation Certificate (CF-6R) for equipment and fenestration products must be completed and signed, as well as an Insulation Certificate (IC-1). Construction must be equal or better to information on the Certificate of Compliance (CF-1R).

Inspection

Alterations

The inspector should make note of any improvements required to achieve compliance, as indicated on the CF-1R. The plan checker should have either verified proof of past energy efficiency improvements, or have indicated on the CF-1R under "special features" any improvements that must be field verified. Proposed construction that is needed to achieve compliance will be indicated on the CF-1R.

For detailed inspection guidelines and documentation requirements, see Chapters 2 and 3.

Before making a visual inspection, check the Certificate of Compliance (CF-1R) and compare it to the Installation Certificate (CF-6R) for equipment and fenestration products, and the Insulation Certificate (IC-1) if there are any building envelope alterations.

7.6 REPAIRS

Energy Code

Repair (Section 101(b))

REPAIR is the reconstruction or renewal of any part of an existing building for the purpose of its maintenance. Note: Repairs to low-rise residential buildings are not within the scope of these standards.

Compliance/ Plan Check

Repair

A repair to building components, systems or equipment that does not require a permit, need not comply with requirements of the standards. In some cases, the *Appliance Efficiency Regulations*, which include minimum efficiencies and certification still apply. These regulations cover:

- Refrigerators and Freezers
- Room Air Conditioners
- Central Air Conditioners
- Gas Space Heaters
- Water Heaters
- Plumbing Fittings
- Fluorescent Lamp Ballasts
- Luminaires
- Gas Cooking Appliances
- Gas Pool Heaters

Examples

Repair

The standards do not specify whether buildings damaged by natural disasters can be reconstructed to their original energy performance specifications. What requirements apply under these circumstances?

Buildings destroyed or damaged by natural disasters must comply with the energy code requirements in effect when the builder or owner applies for a permit to rebuild. The requirements that apply will depend on whether the scope of work is an addition, alteration or new building.

How can I determine if the scope of work is an addition, alteration or new building? And what requirements apply?

Section 100 of the standards indicates that the standards apply to buildings "for which an application for a building permit or renewal of an existing permit is filed (or is required by law to be filed)." It comes down to whether the change is an "addition," "alteration," or new building.

Changes that require a building permit for an increase in conditioned floor area and conditioned volume are “additions.” An addition meets the requirements found in Section 152(a).

Changes that require a building permit, but do not add conditioned floor area and conditioned volume, are “alterations.” An alteration is any change to an existing building's water-heating, space-conditioning or lighting system, or to the envelope that is not an addition. Alterations must meet any mandatory requirements that apply to the specific component being changed (Section 152(b)).

Rebuilding after a natural disaster (if a permit is required) will likely be either an alteration (Section 152(b)) or a new building (Section 100(d)). Requirements for new buildings apply if the local building official determines that the reconstruction is so extensive it is a new building.

Repairs and maintenance work *that do not require a building permit* are not covered by the standards.

Example 7-7: Repairing a single pane window

An existing building has all wood frame single pane windows. If one of the window panes is broken, the window may be repaired with the same type of glass as in the original. This is *not* considered an alteration, so it is *not* required to meet any requirements or to meet the alteration fenestration U-value of 0.75.

Chapter 8: Special Compliance Topics

8.0 SUMMARY

This chapter discusses special topics as they apply to the various compliance paths for the *Energy Efficiency Standards* (hereafter standards). These special topics include:

- **Multi-Family Buildings.** Compliance of the building as a whole or unit-by-unit.
- **Mixed Occupancy Buildings.** Compliance of the dominant occupancy alone or each occupancy separately, and how mandatory measures apply.
- **Change in Occupancy.** Compliance requirements when the occupancy of a building changes.
- **Subdivisions and Master Plans.** Multiple orientations of the same plan.
- **Fenestration Products (Glazing).** An explanation of glazing terminology and the thermal performance rating system for all fenestration products.
- **Wood Space Heat.** A description of compliance for wood heat and installation criteria.
- **Controlled Ventilation Crawl Space (CVC).** An explanation of the procedure for analyzing the energy use, as well as a listing of installation requirements, for CVC.
- **Zonal Control.** A description of the procedure for analyzing the energy use of zonally controlled space conditioning, as well as eligibility and installation criteria.
- **Hydronic Space Heating.** An overview of hydronic space-heating systems and compliance calculations.
- **Evaporative Cooling.** A description of the energy credit for evaporative cooling, as well as eligibility and installation criteria.

CHAPTER OVERVIEW:

Part	Topic	Page
8.1	Multi-Family Buildings	8- 2
8.2	Mixed Occupancy Buildings	8- 4
8.3	Change in Occupancy	8- 4
8.4	Subdivisions & Master Plans	8- 5
8.5	Fenestration Products	8- 7
8.6	Wood Space Heating	8- 12
8.7	Controlled Ventilation Crawl Space (CVC)	8- 14
8.8	Zonal Control	8- 15
8.9	Hydronic/Combined Hydronic Space Heating	8- 18
8.10	Evaporative Cooling	8- 22
8.11	Geothermal (Ground Source) Heat Pumps	8- 23
8.12	Duct Credits	8- 23
8.13	Radiant Barriers	8- 26
8.14	Infiltration Reduction Credit– Air Retarders/Housewraps	8- 26
8.15	Log Homes	8- 27
8.16	Solar Energy Systems	8- 28
8.17	Straw Bale Construction	8- 30

Applicable sections of California Code of Regulations Title 24, Part 6: Sections 100(e), 101(b), 110 through 119, 150 through 152.

- Geothermal Heat Pumps. A description of this type of space conditioning equipment along with efficiency information needed for complying with the standards.
- Duct Credits. A description of the energy credit available for constructing tight ducts along with the installation, documentation and diagnostic testing requirements.

- **Radiant Barriers.** A description of the energy credit for radiant barriers, as well as a listing of eligibility and installation requirements.

- **Air Retarders/Housewraps.** A description of the energy credit for air retarders/air barriers or housewraps, as well as some installation guidelines.

- **Log Homes.** An overview of the unique aspects of log homes, and how their special features can be accounted for in demonstrating compliance.

- **Solar Energy Systems.** An overview of thermal solar systems for space-heating and electric photovoltaic systems.

- **Straw Bale Construction.** An overview of the unique aspects of straw bale construction, and how its special features can be accounted for in demonstrating compliance.

For a discussion of other special topics not covered in this chapter, see Appendix G (*Glossary*).

8.1 MULTI-FAMILY BUILDINGS

In a multi-family building , one dwelling unit shares a common wall and/or floor or ceiling with at least one other dwelling unit. The information contained in this *Residential Manual* applies only to low-rise multi-family buildings. See definitions below.

Energy Code

Low Rise vs. High-Rise Multi-family Buildings (Section 101(b))

HABITABLE STORY is a story that contains space in which humans may work or live in reasonable comfort, and that has at least 50 percent of its volume above grade.

HIGH-RISE RESIDENTIAL BUILDING is a building, other than a hotel/motel, of occupancy group R-1 with four or more habitable stories.

LOW-RISE RESIDENTIAL BUILDING is a building, other than a hotel/motel, that is of occupancy group R-1 and is three stories or less, or that is of occupancy group R-3.

Compliance/ Plan Check

Multi-Family Building Compliance

Multi-family apartment buildings with four or more habitable stories (and hotels or motels of any number of stories) are covered by the standards explained in the latest edition of the *Nonresidential Manual for Compliance with the Energy Efficiency Standards*. This category of high-rise residential includes a building with three or fewer stories of residential dwelling units, with a total of four or more habitable stories in the building.

Multi-family buildings with one to three habitable stories are considered low-rise residential buildings and are discussed in this chapter.

For more information about buildings within the scope of the residential standards, including occupancy group R-2 and congregate residences, see Chapter 1, Part 1.3.

Compliance for a low-rise multi-family buildings may either be demonstrated for the building as a whole or on a unit-by-unit basis. Walls between dwelling units are considered to have no heat transfer, and thus are ignored.

Since there are different standards that apply to low-rise multi-family and high-rise multi-family buildings (Chapter 1, Part 1.2), it is important to first verify the number of habitable stories in the building. Only those habitable stories that have more than half of their volume above grade should be counted in determining the number of habitable stories, and all conditioned space should be accounted for.

Whole Building Compliance

The simplest approach to compliance for a multi-family building is to treat the building as a whole, using any of the compliance paths . In practice, this process is similar to analyzing a single-family residence except for some differences in water-heating budgets explained in Chapter 6.

Compliance Unit-By-Unit

The other approach to multi-family buildings is to demonstrate the energy compliance of each dwelling unit separately. This implies modeling each unit in the building by orientation and floor level, thereby showing that the building as a whole complies (see Figure 8-.1). In this approach, surfaces which separate dwelling units are ignored as they are assumed to have no heat loss or heat gain associated with them.

Different orientations and locations of each unit type within the building must be considered separately. That is, a one-bedroom apartment on the ground floor of a three-story building is different from the same plan on a middle floor or the top floor, even if all apartments have the same orientation and are otherwise identical.

Other options for showing unit-by-unit compliance are similar to those for subdivisions and are explained in Part 8.4 of this chapter.

Examples

Multi-Family Building Compliance

When preparing compliance calculations for a three-story apartment complex, I have the option of showing compliance for each dwelling unit or for the entire building. If I use the individual dwelling unit approach, do I need to provide calculations for every dwelling unit?

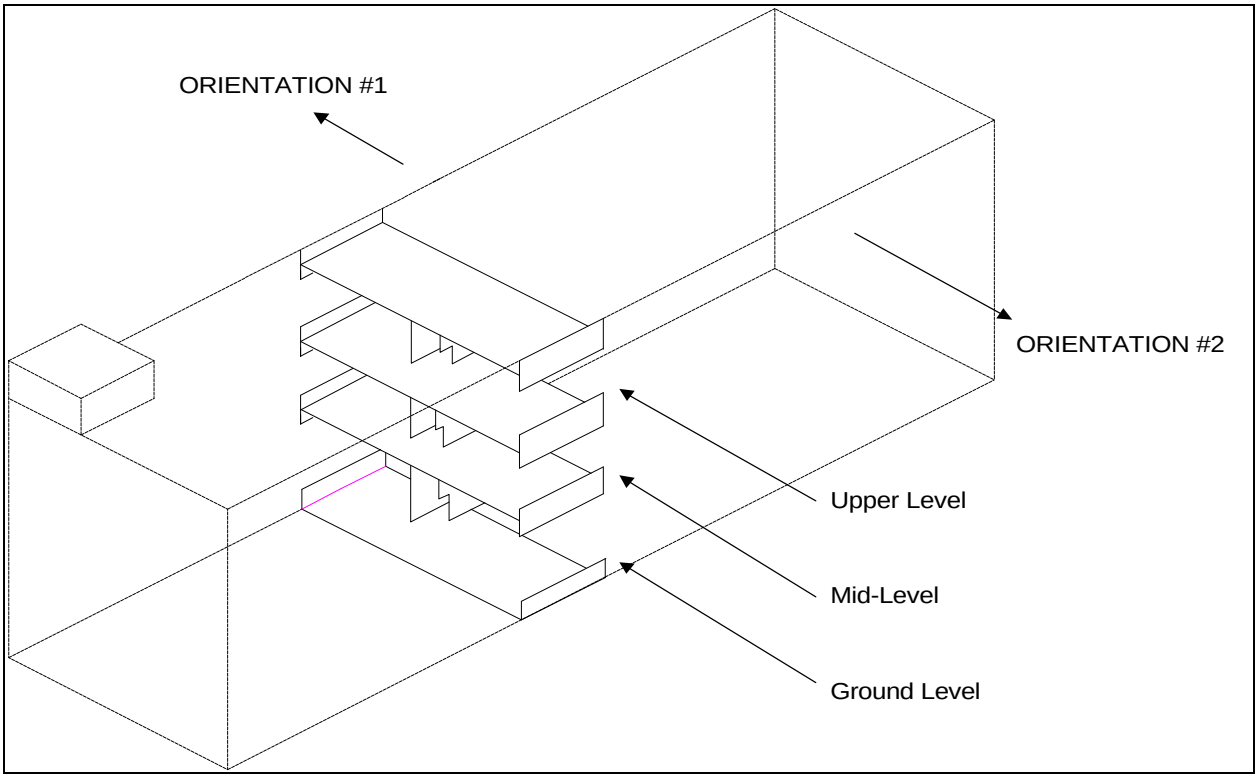

Figure 8-1: Multi-Family Building Option:
Demonstrate Compliance for Each Generic Unit Type in Each of its Characteristic Locations

Each dwelling unit must comply with the standards when using this approach. When dwelling units have *identical* conditions the calculations be combined. This means you will show separate compliance for all unique conditions, such as:

- Front facing North
- Front facing West
- Front/side walls facing East and North
- Front/side walls facing East and South
- Exterior roof, no exterior floor
- Exterior floor, no exterior roof

Surfaces separating two conditioned spaces (such as common walls) have no heat transfer and can be disregarded in the compliance calculations.

Alternatively, you can model the entire building.

8.2 MIXED OCCUPANCY BUILDINGS

Energy Code

Mixed Occupancy (Section 100(e))

When a building is designed and constructed for more than one type of occupancy, the space for each occupancy shall meet the provisions of Title 24, Part 6 applicable to that occupancy.

EXCEPTION to Section 100(e): If one occupancy constitutes at least 90 percent of the conditioned floor area of the building, the entire building may comply with the provisions of Title 24, Part 6 applicable to that occupancy, provided that the applicable mandatory measures in Sections 110 through 139, and 150, are met for each occupancy.

Compliance/ Plan Check

Mixed Occupancy

Some residential buildings have areas of other occupancies, such as retail or office, in the same building. An example of this might be a three-story building with two floors of apartments above ground floor shops and offices. The first thing to consider when analyzing the energy compliance of a mixed occupancy building is the type and area of each different occupancy.

Depending on the area of the different occupancies, you may be able to demonstrate energy compliance as if the whole building is residential (the mandatory measures of the actual occupancy still apply). This is allowed if the residential occupancy accounts for greater than 90 percent of the conditioned floor area of the building (or permitted space).

NOTE:

Mandatory measures apply to each individual occupancy regardless of the compliance approach used. For example, if complying under the mixed occupancy exception, both residential documentation (MF-1R form) and nonresidential documentation for mandatory measures must be submitted with other compliance documentation.

If the building design does not fit the criteria described above for a dominant occupancy, then each separate occupancy must be shown to comply on its own. This may be done by using any of the approved prescriptive or performance methods available for each occupancy type. As a result, documentation for each occupancy type must also be considered separately, and a Certificate of Compliance must be submitted for each occupancy.

8.3 CHANGE IN OCCUPANCY

Energy Code

Change in Occupancy (Section 152(b))

Section 152. Energy Efficiency Standards For Additions and Alterations In Existing Buildings that will be Low-rise Residential Occupancies

. . .

(b) Alterations. Alterations . . . in conjunction with a change in building occupancy to a low-rise residential occupancy shall meet either 1 or 2 below.

[See Chapter 7, Part 7.5, for the full text of Section 152(b).]

Compliance/
Plan Check

Change in Occupancy

A change in occupancy of a currently conditioned space is treated as if the new occupancy had existed previously within the same space. Compliance is demonstrated using the rules that apply to alterations (see Chapter 7, Part 7.5). Only those components of the building that are being modified must comply.

8.4 SUBDIVISIONS AND MASTER PLANS

Introduction

Compliance Requirements for Subdivisions and Master Plans

Subdivisions often require a special approach to energy compliance, since they generally include one or more basic building or unit plans repeated in a variety of orientations. The basic floor plans, *as drawn,* may also be used in a mirror image or *reversed* configuration.

There are three compliance options for subdivisions. They are:

1. Model each individual building, or building condition, separately according to its actual orientation.

2. Model all four cardinal orientations for each building or unit plan type with identical conservation features for no orientation restrictions.

3. Model all four cardinal orientations for each building or unit plan type with different shading features in each orientation.

NOTE: The Commission considered other options for subdivisions and master plans. However, such options greatly increase the complexity of plan checking and field inspecting and were thus rejected.

Compliance/
Plan Check

Subdivisions and Master Plans

Individual Building Approach

The most straightforward compliance option for subdivisions is to analyze each individual building in the project separately using any compliance method. This may be practical for subdivisions with only custom buildings, or with only one or two specific orientations for each building plan.

This approach requires that each unit be shown to comply, with separate documentation submitted for each unit plan in the orientation in which it will be constructed.

Energy Code

Compliance Requirements for Performance Standards, Multiple Orientations (Section 151(c))

The application for a building permit shall include documentation which demonstrates, using an approved calculation method, that the new building has been designed so that its energy use from depletable energy sources does not exceed the combined water heating and space conditioning energy budgets for the appropriate climate zone.

. . .

MULTIPLE ORIENTATION ALTERNATIVE to Section 151(c): A permit applicant may demonstrate compliance with the energy budget requirements of Section 151(a) and (b) for any orientation of the same building model, if the documentation demonstrates that the building model with its proposed designs and features would comply in each of the four cardinal orientations.

In the four compliance demonstrations, all designs and features must be the same, except that a model may differ in its shading in order to show compliance in the four cardinal directions.

Multiple Orientation Alternative: No Orientation Restrictions

The computer method may be used to demonstrate that a single family dwelling plan or a unit plan in a multi-family building complies regardless of how it is oriented within the same climate zone (Figure 8-2).

To assure compliance in any orientation, the annual energy consumption must be calculated in each of the four cardinal orientations: true north, true east, true south and true west.

NOTE:

With this option, the buildings must have the identical combination of conservation measures and levels in each orientation and comply with the energy budget in each case.

This method differs from the option explained in the next section in that each building or unit covered by the analysis must include identical features, including shading features, regardless of the orientation.

If a building floor plan is reversed, either the original plans or the reversed plans may be shown to comply in all four cardinal orientations. Multi-family buildings may be analyzed as a whole building using this method or on a unit-by-unit approach at the option of the permit applicant.

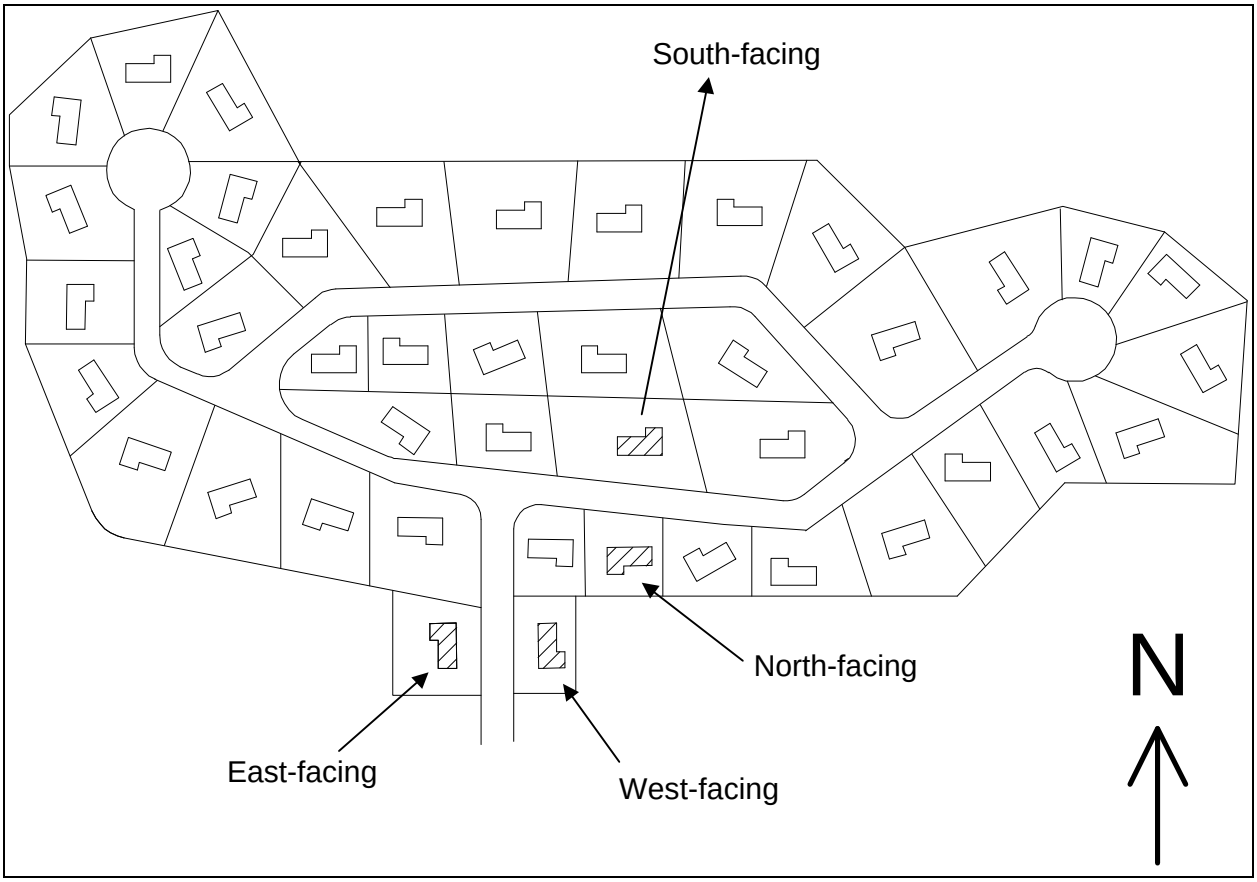

**Figure 8-2: Subdivisions and Master Plans Option:
Demonstrate Compliance for Each Cardinal Orientation for Each Basic Model Type**

For compliance, submit documentation of the energy budgets for each of the four orientations. In some cases this documentation will be four C-2Rs, while some computer programs generate this information on one form. One CF-1R form is required.

Multiple Orientations: Orientation Restrictions

Performance methods may be used to demonstrate that a building type or unit plan type in a multi-family building complies *with orientation restrictions*. This approach is allowed when shading is to be selectively applied according to the direction the building faces (as documented on the CF-1R form under the heading "Special Features/ Remarks").

Orientation restrictions automatically apply when the shading measures applied to the same plan vary to achieve compliance in each cardinal orientation.

Each specific combination of shading features is modeled for the cardinal orientation—true north, true east, true south or true west—in which it is to be built, and compliance must be demonstrated in each instance.

With this approach, each building or unit covered by the analysis must be constructed with the specific set of shading features which demonstrate compliance in that orientation.

For compliance, submit documentation of the energy budgets for each of the four orientations—four C-2Rs. One CF-1R form, with the variations in shading features indicated in the "Special Features/ Remarks" section, is required to be submitted and “on the plans” (see Chapter 1).

Examples

Subdivisions and Master Plans

Example 8-1 Multiple Orientations: No Orientation Restrictions

A single family unit plan in Climate Zone 3 has been calculated by an approved computer method to have an energy budget of 27.89 kBtu/ft^2-yr. The proposed design is modeled in all four orientations with no required shading and no variation in any other conservation measure. The following predicted energy use is calculated:

Front North = 24.65 kBtu/ft^2-yr
Front East = 26.41 kBtu/ft^2-yr
Front South = 27.07 kBtu/ft^2-yr
Front West = 27.83 kBtu/ft^2-yr

Since the energy consumption is less than 27.89 kBtu/ft^2-yr in all cases, the unit plan may be constructed in any orientation within Climate Zone 3.

Example 8-2 Multiple Orientations: Orientation Restrictions

The same unit plan (Example 8-1) is to be constructed in Climate Zone 12. The energy budget for the unit plan in the new climate zone is calculated to be 39.22 kBtu/ft^2-yr. The proposed design is modeled in all four orientations with interior blinds on approximately 80 percent of the "front" and "rear" fenestration areas when the front faces east or west. No interior blinds are proposed when the front faces north or south. The results are as follows:

Front North = 35.56 kBtu/ft^2-yr
Front East = 33.98 kBtu/ft^2-yr
Front South = 38.68 kBtu/ft^2-yr
Front West = 39.04 kBtu/ft^2-yr

Again all cases may be constructed.

8.5 FENESTRATION PRODUCTS

Energy Code

Fenestration Products (Section 101(b)

Definitions

DUAL-GLAZED GREENHOUSE WINDOWS are a type of dual-glazed fenestration product which adds conditioned volume but not conditioned floor area to a building.

EXTERIOR DOOR is a door through an exterior partition that is opaque or has a glazed area that is less than or equal to one-half of the door area. Doors with a glazed area of more than one-half of the door area are treated as a fenestration product.

FENESTRATION PRODUCT is any transparent or translucent material plus any sash, frame, mullions, and dividers, in the envelope of a building, including, but not limited to: windows, sliding glass doors, french doors, skylights, curtain walls, garden windows, and other doors with a glazed area of more than one-half of the door area.

SKYLIGHT is glazing having a slope less than 60 degrees from the horizontal with conditioned space below, except for purposes of complying with Section 151(f), where a skylight is glazing having a slope not exceeding 4.76 degrees (1:12) from the horizontal.

SOLAR HEAT GAIN COEFFICIENT (SHGC) is the ratio of the solar heat gain entering the space through the fenestration area to the incident solar radiation. Solar heat gain includes directly transmitted solar heat and absorbed solar radiation, which is then reradiated, conducted, or convected into the space.

WINDOW is glazing that is not a skylight.

Introduction

Fenestration Products

Below is a discussion of how fenestration works, how features of the product affect its rated efficiencies (U-value and SHGC), terminology and general compliance information. In addition:

- Certification, labeling and mandatory requirements for fenestration products are included in Chapter 2.
- Additions and alterations compliance issues related to fenestration are discussed in Chapter 7.
- Fenestration topics related to prescriptive and computer compliance are found in Chapters 3 and 5.

Useful Information

Energy Impacts of Fenestration Products

Windows, glazed doors and skylights have a significant impact on energy use in a home. They account for up to 50 percent of residential space-conditioning energy. The size, orientation and types of installed fenestration products can dramatically affect the overall energy performance of a house. If designed properly, windows can add heat to a space in the winter, lowering heating bills.

Fenestration products can be responsible for up to 50 percent of heat loss in the winter and up to 50 percent of the heat gain in the summer. The U-value and the SHGC both contribute to maintaining overall thermal comfort and energy performance throughout the year. Properly operating shading year round curtails heat gain in the summer, but reduces the need for heating in the winter. Likewise, the U-value is important in reducing conductive heat gain in hot climates.

Two important factors in determining window performance are U-value and SHGC:

- U-value is a measure of how much heat travels through a fenestration product. *The lower the U-value, the more energy efficient the product*.
- SHGC is a measure of the relative amount of heat gain from sunlight that passes through a fenestration product. *The lower the SHGC, the better it is able to keep out solar radiation.*

The U-value and the SHGC both contribute to winter and summer overall thermal comfort and energy performance.

Several parameters control the thermal performance of fenestration products. These include:

- Frame materials, design and configuration (including cross-sectional characteristics)
- Number of panes of glazing
- Gap width (i.e., the distance between panes)
- Window type (i.e., casement versus double hung)

- Glass surface coatings and/or films
- Gas infill type (i.e., type of gas filling the space between panes of glass)
- Spacer material (i.e., the type of material separating multiple panes of glass)

Fenestration is usually framed in either wood, aluminum, vinyl or composites of these. Frame materials such as wood and vinyl are better insulators than metal. Some aluminum-framed units have *thermal breaks* that reduce the conductive heat transfer through the framing element as compared with similar units that have no such conductive thermal barriers.

Dual glazing offers opportunities for improving performance beyond the dimension of the air space between panes. For example, special materials that reduce emissivity of the surfaces facing the air space, including so-called *low-e* (low-emissivity) or other coatings, improve the thermal performance of fenestration products through the glass. Fill gases other than dry air – such as carbon dioxide, argon or krypton – also improve thermal performance.

Useful Information

Descriptions of Fenestration Terms

The following is a brief description of some common terms associated with fenestration products:

Center of Glass U-Value: The U-value measured only through the glass more than 2.5 inches from dividers or the edge of the glass.

Dividers (Muntins): Elements that actually or visually divide different lites of glass. These may be true divided lites, between the panes, and/or applied to the exterior or interior of the glazing.

Edge of Glass: The area of glazing within 2.5 inches of the spacer.

Frame Types:

- **Thermal Break:** Metal frames that are not solid metal from the inside to the outside, but are separated in the middle by a material, usually vinyl, with a significantly lower conductivity.
- **Vinyl:** A polyvinyl chloride (PVC) compound used for frame and divider elements with a significantly lower conductivity than metal and a similar conductivity to wood.

Gap Width: The distance between glazings in multi-glazed systems (e.g., dual or triple glazing). This dimension is measured from inside surface to inside surface. Some manufacturers may report "overall" IG unit width which is measured from outside surface to outside surface.

Gas Infill: Air, argon, krypton, carbon dioxide, SF6 or a mixture of these gases, placed in the space between the panes of dual or triple glazing.

Grilles: See Dividers.

IG Unit: Insulating glass unit. An IG unit includes the glazings, spacer(s), films (if any), gas infills and edge caulking.

Lights orLites: a layer of glazing material, especially in a multi-layered IG unit.

Low E Coating (low emissivity metallic coating): A transparent metallic coating applied to glazing that reduces its emissivity, and therefore improves its thermal performance. Low E glazing has a better (lower) U-value than standard glazing. Types of Low E coatings include:

- **Soft Coat**: A sputter applied coating sprayed on at a high temperature. These coatings are usually susceptible to degradation (i.e., oxidation) from contact through handling and storing, but generally provide a lower emissivity, and therefore better thermal performance, than hard coatings.
- **Hard Coat:** Low emissivity metallic coatings applied pyrolytically at or near the melting point of the glass so that it bonds with the surface layer of glass. Hard coatings are not subject to oxidation or scratching as the soft coatings are, and new hard coat technologies provide performance very close to that of the soft coatings.

Mullion: Vertical framing member separating adjoining window or doors.

Muntins: See Divider.

Spacer: A material that separates multiple panes of glass in an insulating glass unit. Types of spacers include:

- **Aluminum**: Metal channel that is used either against the glass (sealed along the outside edge of the insulated glass unit), or separated from the glass by one or more beads of sealant.
- **"Insulating"**: Non-metallic, fairly non-conductive materials, usually rubber compounds.
- **Others:** Wood, fiberglass and composites.

Suspended Films: Plastic films, stretched between the elements of the spacers between panes of glazing, which act as radiant reflectors to slow the heat loss from the interior to the exterior.

Useful Information

Certification of U-value for Fenestration Products

U-value Rating

The U-value is the total amount of heat that flows through a fenestration product at a given difference in temperature between the interior and exterior surfaces, including the frame, edge of glass and muntins, in Btu/hr-ft^2-^{o}F.

As required by Section 116 of the standards, there are two procedures for establishing the U-value of fenestration products:

- The National Fenestration Rating Council NFRC-100-91 (1991) or NFRC 100 (1997); or
- Default U-values (see Chapter 2).

Estimating the rate of heat transfer through framing elements of a fenestration product is complicated by the variety of frame configurations for operable windows, the different combinations of materials used for sash and frames, and the difference in sizes available in various applications. The NFRC rating system makes the differences uniform, so that an entire fenestration product line is assumed to have only two typical sizes, one for residential and one for nonresidential. The NFRC rated U-value may be obtained from a directory of certified fenestration products, directly from a manufacturer's listing in product literature, or from the product label.

IMPORTANT NOTE:

Each general type of fenestration product (e.g., double wood-frame Low-E or double metal-frame thermal break) has within it a wide range of U-values. Therefore, it is impossible to predict the U-value of a specific product without obtaining the NFRC U-value rating. Consult the NFRC's fenestration product directory or the manufacturers listed NFRC U-value ratings carefully when selecting a U-value to use in compliance calculations.

Compliance/ Plan Check

U-value for Product Specification

When performing compliance calculations and preparing documentation, consult a directory of fenestration products which contains the certified U-value ratings. One such directory is available from NFRC (see Appendix E).

If the exact make and model number of the fenestration products to be installed is not known, there are a few options:

- Look up the U-values for a number of the products most likely to be installed, and use the highest value of those products. Whichever fenestration product is then installed will comply with the U-value used in the calculation.
- Specify a particular product and state "or equivalent." In this approach, the builder or installer must understand that the U-value of the installed product must match, or be less than, the U-value specified in the compliance documentation.
- Use the appropriate default U-value from Table 1-D of Section 116 of the standards (see Chapter 2). The disadvantages of this approach are that:

  (a) There is no guarantee that a selected product will have the same or better

performance than the U-value assigned to that generic type; or,

(b) The U-value in the table may be much higher than the actual installed U-value so that additional efficiency measures may be required for compliance.

Useful Information

Certification of SHGC for Fenestration Products

Solar Heat Gain Coefficient (SHGC)

The SHGC is the measure of how well a fenestration product limits solar heat gain entering the space through the fenestration. This value includes the effects of the frame which also effect how much solar heat enters the building.

As required by Section 116 of the standards, there are two procedures for establishing the SHGC of fenestration products:

- The National Fenestration Rating Council NFRC 200 (1995); or,
- Default SHGC values (see Chapter 2).

SHGC values are between 0 and almost 1, with 1.00 representing no ability to limit solar heat gain. *The lower the SHGC, the better the fenestration product rejects heat*.

For a full explanation of shading, SHGC and shading calculations including the effects of framing divider factors, interior blinds and exterior sunscreens, see *Shading* in the *Glossary*.

NOTE:

Low-e coatings lower the SHGC in addition to reducing heat loss, but there is no direct relationship between emissivity and SHGC. For example, a dual glazed unit with an emissivity of 0.22 may have an SHGC of 0.73 – nearly identical to clear dual glazing - or it may have an SHGC of 0.60, much better than clear dual glazing.

Compliance/ Plan Check

SHGC Specification

When performing compliance calculations and preparing documentation, consult a directory of fenestration products that contains the certified SHGC ratings. One such directory is available from NFRC (see Appendix E).

If the exact make and model number of the fenestration products to be installed is not known, there are a few options:

- Look up the SHGC value for a number of products most likely to be installed, and use the highest value of those products. Whichever fenestration product is then installed will comply with the SHGC value used in the calculation.
- Specify a particular product and state "or equivalent." In this approach, the builder or installer must understand that the SHGC value of the installed product must match or be less than the SHGC value specified in the compliance documentation.
- Use the appropriate default SHGC value from Table 1-E of Section 116 of the standards (see Chapter 2). The disadvantages of this approach are that:

  >> There is no guarantee that a selected product will have the same or better performance than the U-value assigned to that generic type; or,

  >> The SHGC value in the table may be much higher than the actual installed SHGC so that additional efficiency measures may be required for compliance.

Construction

Fenestration Products

The fenestration product installer needs to understand the required U-values and product SHGC values for the specific project, based on the compliance documentation such as the Certificate of Compliance (CF-1R). The installer should check the documentation to insure that

the products have the temporary label on the center of the glazing which meets the compliance requirements.

The U-value for compliance with the residential standards is the "AA" size. Make sure the "AA" size U-value is the same as, or less than, the U-value used in the compliance documentation. The temporary label must remain on the product until the field inspector has inspected it.

See Chapter 2 for a complete discussion of Installation Certificate (CF-6R form) and the responsibility for completing this form as required by Section 10-103 (Administrative Regulations)

8.6 WOOD SPACE HEATING

Energy Code

Wood Heater (Section 101(b))

WOOD HEATER is an enclosed wood burning appliance used for space heating and/or domestic water heating, and which meets the definition in Federal Register, Volume 52, Number 32, February 18, 1987.

Introduction

Wood Heater

An exceptional method establishes guidelines for use of wood heaters with standards compliance (Energy Commission approved according to Title 24, Part 1, Section 10-109 based on Compliance Options Technical Analysis, Contract #400-85-028).

Eligibility Criteria

A. The building department having jurisdiction must determine that natural gas is not available;

NOTE:

Liquefied petroleum gas, or propane, is not considered natural gas.

B. The local or regional air quality authority must determine that their authorization of this exceptional method is consistent with state and regional ambient air-quality requirements pursuant to Sections 39000 to 42708 of the California Health and Safety Code;

C. The wood heater must be installed in a manner which meets the requirements of all applicable health and safety codes, including, but not limited to, the requirements for maintaining indoor air quality of the *Uniform Mechanical Code*, in particular those homes where vapor barriers are installed (see Chapter 2);

D. The wood heater must meet the EPA definition of a wood heater as defined in the Federal Register, Vol. 52, No. 32, February 18, 1987 (see below);

E. The performance of the wood heater must be certified by a nationally recognized agency and approved by the building department having jurisdiction, to meet the performance standards of the EPA;

F. The rated output of the wood heater must be at least sixty percent (60%) of the design heating load, using calculation methods and design conditions as specified in Section 150(h) of the standards (see Chapter 2)*;*

G. A backup heating system must be installed. At the discretion of the local enforcement agency it may be designed to provide all of the design heating load, using calculation methods and design conditions as specified in Section 150(h) of the standards;

H. The wood heater must be located such that transfer of heat from the wood heater is effectively distributed throughout the entire residential unit or must be used in conjunction with a mechanical means of providing heat distribution throughout the dwelling.

   Habitable rooms separated from the wood heater by one free opening of less than 15 square feet or two or more doors must be provided with a positive heat distribution system, such as a thermostatically controlled fan system. Habitable rooms do not include closets or bathrooms.

   Wood heaters on a lower level are considered to heat rooms on the next level up, provided they are not separated by two or more doors.

I. The wood heater must be installed according to manufacturer and local enforcement agency specifications and must include instructions for homeowners which describe safe operation;

J. The local enforcement agency may require documentation that demonstrates that a particular wood heater meets any and all of these requirements.

Equipment Criteria

The federal register includes minimum criteria for wood heaters, established by the Federal Environmental Protection Agency. This criteria defines a wood heater as:

... an enclosed, wood burning appliance used for space heating, domestic water heating, or indoor cooking that meets all of the following criteria:

1. *An air-to-fuel ratio averaging less than 35 to 1,*
2. *Firebox volume less than 20 cubic feet,*
3. *Minimum burn rate less than 5 kilogram/hour (11.0 lbs/hr), and*
4. *Maximum weight of less than 800 kilograms (1762 lbs).*

The federal rules explicitly exclude furnaces, boilers and open fireplaces, but include wood-heater inserts.

Compliance/ Plan Check

Wood Space Heating

The Energy Commission's exceptional method for wood heaters with any type of backup heating is available in areas where natural gas is not available. If the required eligibility criteria are met, a building with one or more wood heaters may be shown to comply with the standards using one of the following methods:

NOTE:

Duct efficiency credits may *not* be taken, as the combined wood heater/backup-heating system is assumed to be equivalent to a 78 percent AFUE central furnace with R-4.2 ducts in the attic.

Prescriptive Approach

The building envelope conservation measures of any one of the Alternative Component Packages must be installed, and the overall heating system efficiency for the wood heater and its backup-heating system may be assumed to be equivalent to that required by the package.

Performance Approach

A computer method may be used for compliance, with the overall heating system efficiency for the wood heater and its backup-heating system assumed to be equivalent to a 78 percent AFUE central furnace with R-4.2 ducts in the attic. The backup-heating system is not included in the compliance calculations.

NOTE:

If all of the criteria for the wood heat exceptional method is not met, the backup-heating system must be included in the compliance calculations as the primary heat source.

Wood Water Heating

Credit is available for the use of wood heat with water heating systems. See Wood Stove Boilers in Chapter 6, Part 6.6.

Examples

Wood Heat

Are pellet stoves treated the same as wood stoves for the purposes of standards compliance?

Yes.

If a wood stove is installed in a wall, does it have to meet the fireplace requirements of standards Section 150(e)?

No. A wood stove that meets EPA certification requirements does not have to meet any requirements applicable to fireplaces.

8.7 CONTROLLED VENTILATION CRAWL SPACE (CVC)

Introduction

Controlled Ventilation Crawl Space

The Energy Commission has approved an exceptional method for analyzing the energy impact of buildings with raised floors which use foundation wall insulation and have automatically controlled crawl-space vents. The method is available as an option using an approved computer method with unique modeling criteria explained in Chapter 5, Part 5.4K.

Construction

Controlled Ventilation Crawl Space

The following steps must be taken, *and the approach must be approved by the local building department*, for the raised-floor building to show compliance with the standards under this exceptional method:

Drainage

Proper enforcement of site engineering and drainage, and emphasis on the importance of proper landscaping techniques in maintaining adequate site drainage, is critical.

Ground Water And Soils

Local ground water tables at maximum winter recharge elevation should be below the lowest excavated site foundation elevations. Sites that are well drained and that do not have surface water problems are generally good candidates for this stem-wall insulation strategy. However, the eligibility of this alternative insulating technique is entirely at the building officials' discretion. Where disagreements exist, it is incumbent upon the applicant to provide sufficient proof that site drainage strategies (e.g., perimeter drainage techniques) will prevent potential problems.

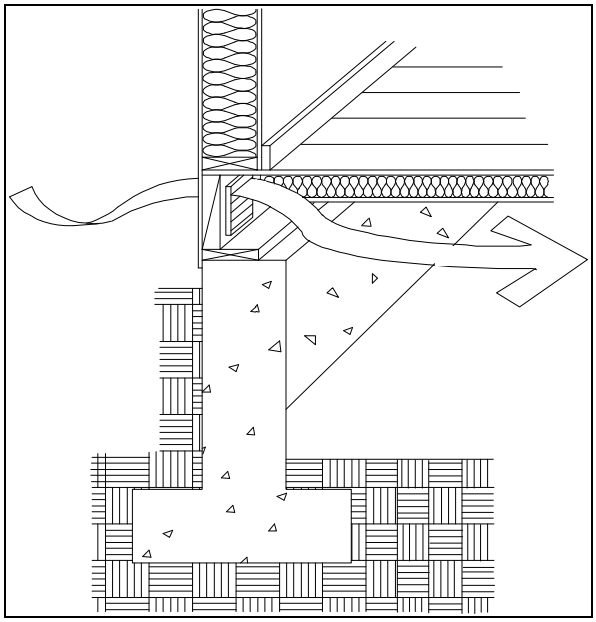

Figure 8-3: Controlled Ventilation Crawl Space

Ventilation

All crawl space vents must have automatic vent dampers to receive this credit. Automatic vent dampers must be shown on the building plans and installed. The dampers should be temperature actuated to be fully closed at approximately 40°F and fully open at approximately 70°F.

Cross ventilation consisting of the required vent area reasonably distributed between opposing foundation walls is required.

Foam Plastic Insulating Materials

Foam plastic insulating materials must be shown on the plans and installed when complying with the following requirements:

- Fire Safety—*UBC* Section 1712(b)2. Products shall be protected as specified. Certain products have been approved for exposed use in under floor areas by testing and/or listing.
- Direct Earth Contact—Foam plastic insulation used for crawl-space insulation having direct earth contact shall be a closed cell water resistant material and meet the slab-edge insulation requirements for water absorption and water vapor transmission rate specified in the mandatory measures.

Mineral Wool Insulating Materials

- Fire Safety—*UBC* Section 1713(c). "All insulation including facings, such as vapor barriers or breather papers installed within ... crawl spaces ... shall have a flame-spread rating not to exceed 25 and a smoke density not to exceed 450 when tested in accordance with *UBC*. Standard No. 42-1." In cases where the facing is also a vapor retarder, the facing shall be installed to the side that is warm in winter.
- Direct Earth Contact—Mineral wool batts shall not be installed in direct earth contact unless protected by a vapor retarder/ground cover.

Vapor Barrier (Ground Cover)

A ground cover of 6 mil (0.006 inch thick) polyethylene, or approved equal, shall be laid entirely over the ground area within crawl spaces.

- The vapor barrier shall be overlapped six inches minimum at joints and shall extend over the top of pier footings.
- The vapor barrier should be rated as 1.0 perm or less.
- The edges of the vapor barrier should be turned up a minimum of four inches at the stem wall.
- Penetrations in the vapor barrier should be no larger than necessary to fit piers, beam supports, plumbing and other penetrations.
- The vapor barrier must be shown on the plans and installed.

Studies show that moisture conditions found in crawl spaces that have minimal ventilation do not appear to be a significant problem for most building sites provided that the crawl-space floors are covered by an appropriate vapor barrier and other precautions are taken. The Energy Commission urges building officials to carefully evaluate each application of this insulating technique in conjunction with reduced ventilation because of the potential for adverse effects of surface water on crawl-space insulation that could negate the energy savings predicted by the procedure.

8.8 ZONAL CONTROL

Introduction

Zonally Controlled Space Conditioning

An energy compliance credit is provided for zoned heating and air-conditioning systems which save energy by providing selective conditioning for only those areas of a house that are occupied. A house having at least two zones (living and sleeping) with separate thermostats controlling temperatures in the zones, and with a maximum noncloseable opening of 40 square feet may qualify for this compliance credit. The equipment may consist of one air-conditioning system for the living areas and another system for sleeping areas or a single system with zoning capabilities, set to turn off the sleeping areas in the daytime and the living area unit turned off at night. (See Figure 8-4).

Energy Code

Zone (Section 101(b))

ZONE, SPACE CONDITIONING is a space or group of spaces within a building with sufficiently similar comfort conditioning requirements so that comfort conditions, as specified in 144(b)3 or 150(h), as applicable, can be maintained throughout the zone by a single controlling device.

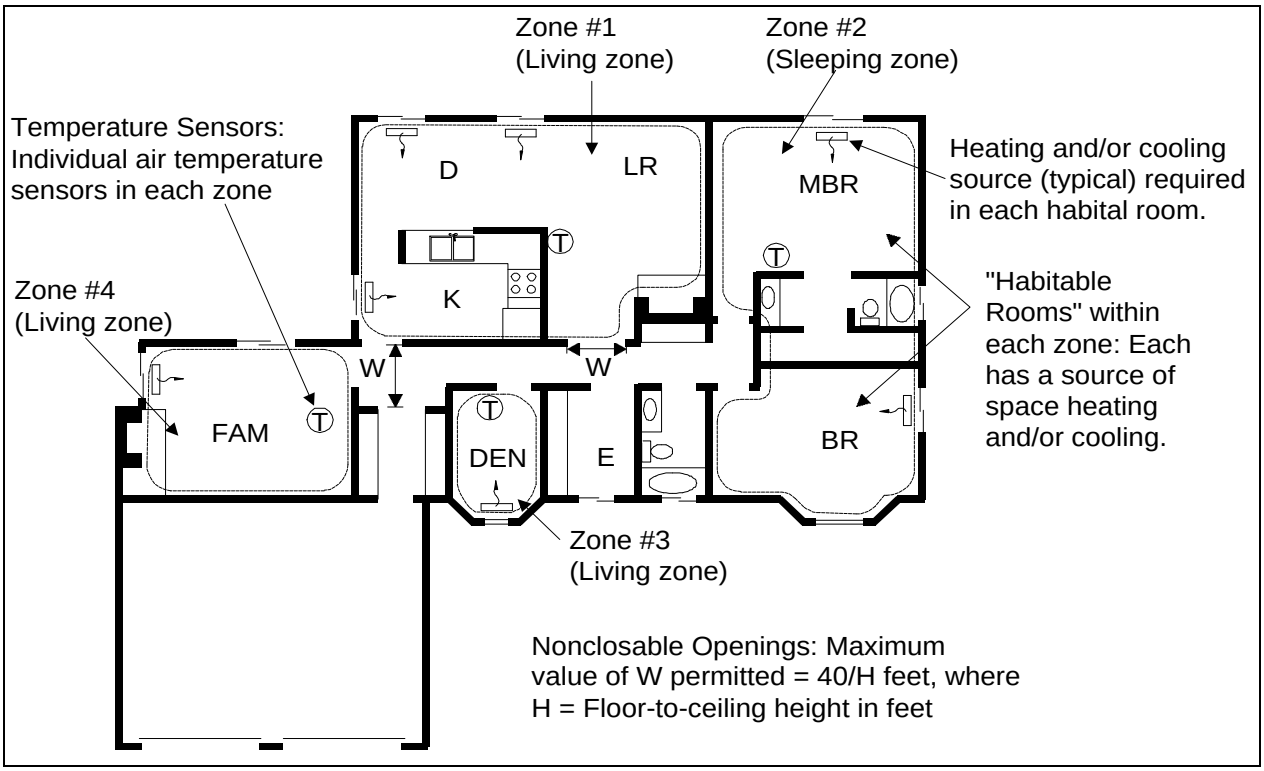

Figure 8-4: Zonal Control Requirements for Energy Credit

Compliance/
Plan Check

Zonally Controlled Space Conditioning

A procedure for analyzing the energy impact of zonally controlled space-heating and -cooling systems has been approved by the Energy Commission as an exceptional method (Energy Commission approved according to Title 24, Part 1, Section 10-109 based on Compliance Options Approval Request, May 14, 1985). The method is available as an option using a computer performance approach and specific modeling criteria (Chapter 5, Part 5.4L).

NOTE:

Although multiple thermally distinct living and/or sleeping zones may exist in a residence, the correct way to model zonal control credit requires only two zones: one living zone and one sleeping zone. All separate living zone components must be modeled as one single living zone, and the same must be done for sleeping zones.

Construction

Zonally Controlled Space Conditioning

There are unique eligibility and installation requirements that must be met in order for this zonal control method to receive conservation credit. The following steps must be taken for the building to show compliance with the standards under this exceptional method:

Temperature Sensors

Each thermal zone, including a living zone and a sleeping zone, shall have individual air temperature sensors.

Habitable Rooms

Each habitable room in each zone shall have a source of space heating and/or cooling (if zonal credit for cooling is desired) such as forced air supply registers or individual conditioning units. Habitable rooms shall not include bathrooms, laundry, halls and/or dressing rooms.

Noncloseable Openings

The total noncloseable opening area between adjacent living and sleeping thermal zones (i.e., halls, stairwells or other openings) shall be less than or equal to 40 square feet. All remaining zonal boundary areas shall be separated by permanent floor to ceiling walls and/or fully solid operable doors capable of restricting free air movement when in the closed position.

Setback Thermostats

Each zone shall be controlled by a central automatic dual setback thermostat that can control the conditioning equipment and maintain preset temperatures for varying time periods in each zone independent of the other.

1. Each zone must have automatic dual setback control for heating, and setup control for cooling if cooling, is provided.

2. Thermostat locations in each zone must provide accurate temperature readings of the typical condition in that zone.

3. The control may be switched from heating to cooling mode manually.

4. The control must be programmable by the occupant.

5. For residences using heat pump systems, the automatic setback thermostat must have two-stage heating which incorporates a recovery ramp of other logic that will minimize electric resistance heating.

Forced Air Ducted Systems

1. Each zone must be served by a return air register located entirely within the zone. Return air dampers are not required.

2. Dampers shall be manufactured and installed so that when they are closed, there is no measurable air flow at the registers.

3. The system must be designed to operate within the equipment manufacturer's specifications.

4. Air is to positively flow into, through and out of a zone only when the zone is being conditioned. No measurable amount of supply air is to be discharged into unconditioned or unoccupied space in order to maintain proper air flows in the system.

5. Systems that allow supply air to be bypassed to the return-air system shall be protected against short cycling and excessive temperatures of the space-conditioning equipment, and include necessary controls for efficient, safe and quiet operation.

Examples

Zonal Control

In defining the living and sleeping zones for a home with a zonally controlled HVAC system, can laundry rooms and bathrooms (which are not habitable spaces) be included on whichever zone they are most suited to geographically (e.g., a bathroom located near bedrooms)?

Yes. For computer modeling, include the square footage of any nonhabitable, or indirectly conditioned spaces, with the closest zone.

I have two HVAC systems and want to take zonal control credit. Can the return air for both zones be located in the hallway (living zone)?

No. Because of the need to prevent mixing of air between the conditioned zone and the unconditioned zone, it is necessary to (1) have the return air for each zone within that zone, and (2) limit any noncloseable openings between the two zones to 40 square feet or less. Unless these criteria, in addition to the other criteria listed in this Chapter can be met, credit for a zonally controlled system cannot be taken.

8.9 HYDRONIC/COMBINED HYDRONIC SPACE HEATING

Introduction

Hydronic Heating

Hydronic heating is the use of water as a heat delivery medium in a space-heating system. Figure 8-5 shows a simple schematic illustrating some of the components in a hydronic-heating system. A hydronic-heating system consists of five parts.

- The water-heating device
- A heat delivery device
- Supply and return piping
- One or more pumps
- Controls

Combined hydronic heating refers to the use of a single water heating device as the heat source for both space and domestic hot water heating. Figure 8-6 illustrates the difference between a hydronic and combined hydronic-heating system using an indirect fired water heater.

The indirect fired water heater supplies domes-tic hot water. The hot water is heated, indirectly, by the boiler via a heat exchanger in the indirect fired water heater.

An example of a simple combined hydronic-heating system is a storage gas water heater used in conjunction with a fan coil unit (see Figure 8-7). The water heater provides hot water for both domestic use and space heating. A fan coil unit consists of a sheet metal box with supply and return air-duct connections, an internal copper tube and fin heat exchanger, and may also include a fan, pump and controls. When the thermostat calls for heat, the controls energize the pump and fan. The pump circulates hot water from the water heater through the tube and fin heat exchanger and back to the water heater. The fan blows the cool return air across the heat exchanger, transferring the heat from the water to the air. The fan then distributes the heated air throughout the home. Many fan coil units can also have air conditioning added to them.

Compliance/ Plan Check

Hydronic Heating

Complete a DHW-5 worksheet for any project that includes a hydronic space-heating system. This worksheet should accompany all applicable water-heating compliance worksheets. The DHW-5 worksheet is used to determine the effective AFUE for storage gas water heaters and the effective HSPF for storage electric and heat pump water heaters used to supply energy for the combined hydronic space- and water-heating system.

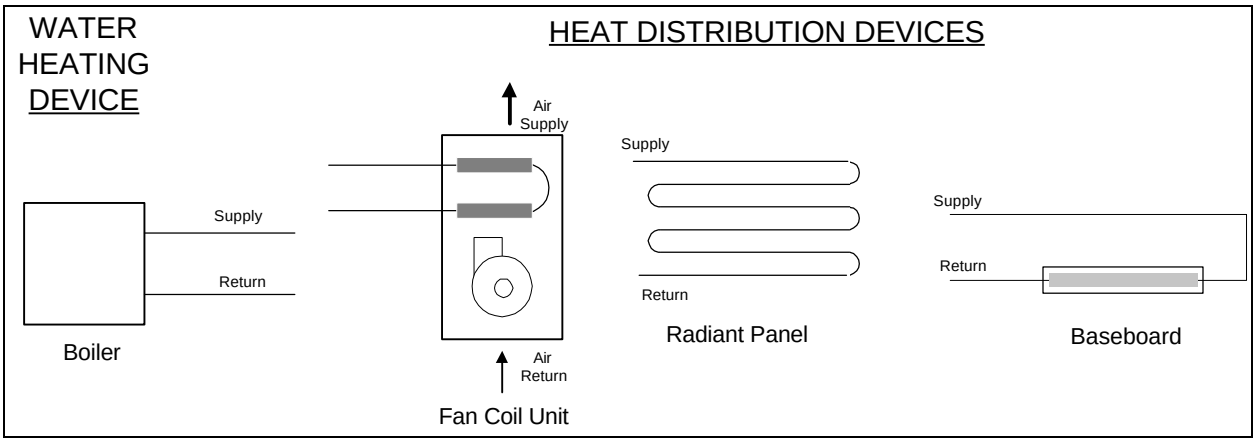

Figure 8-5: Hydronic Heating System Components

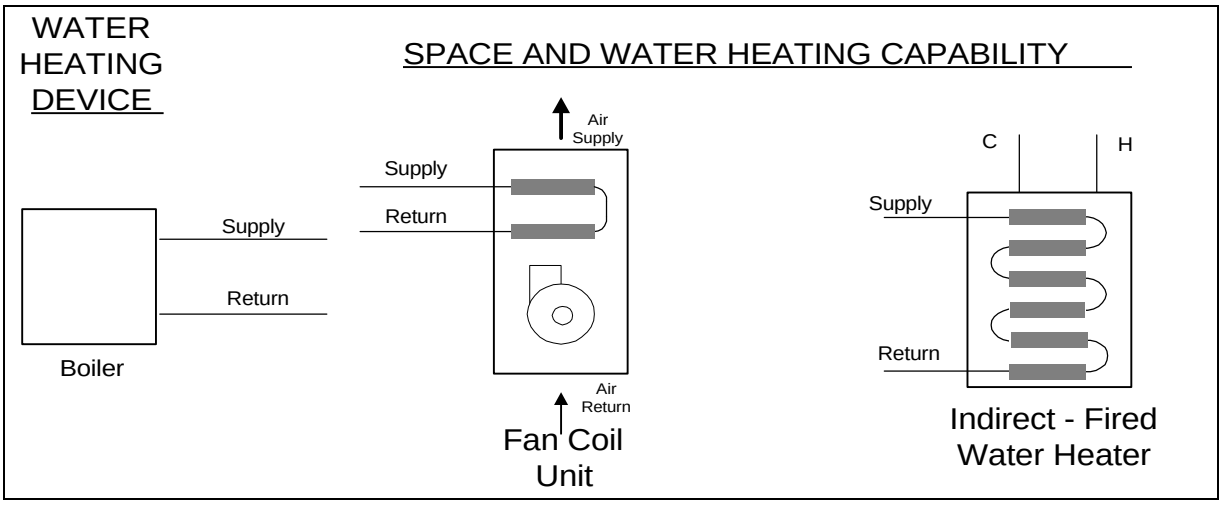

Figure 8-6: Combined Hydronic Heating System

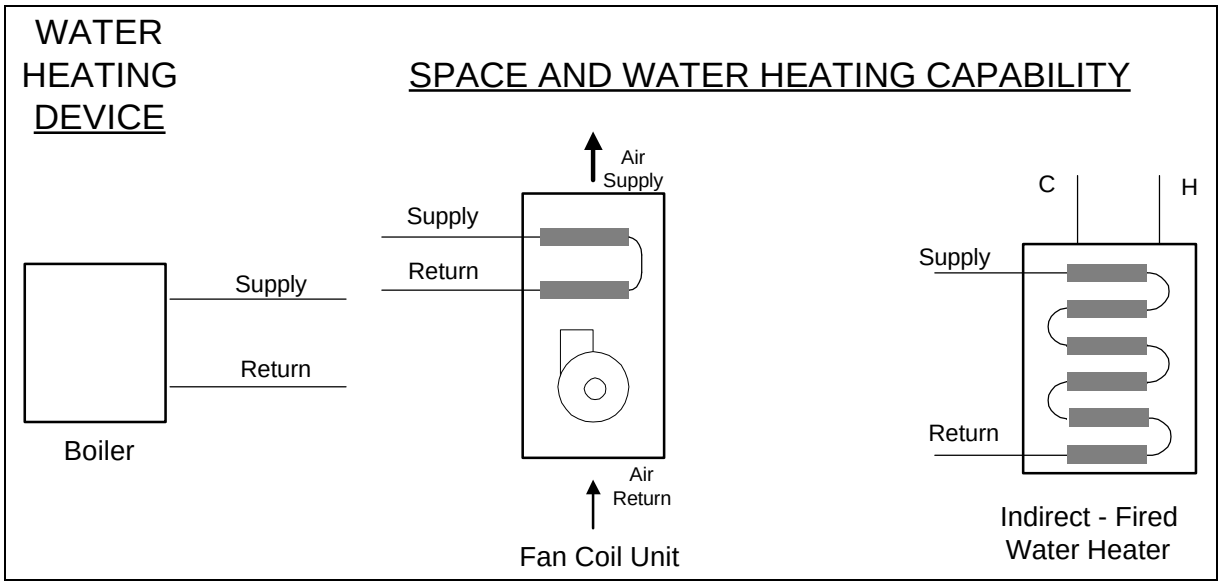

Figure 8-7: Simple Combined Hydronic Heating System

Dedicated Hydronic

When water heater(s) are used for space heating alone (i.e., a separate water heater for domestic hot water), the water heater functions as a boiler.

For showing compliance of dedicated hydronic systems, the AFUE or HSPF of the water heater, as determined in Part 5.5 (DHW-5), is used. This AFUE or HSPF value is used in the packages or for showing compliance with an energy budget. Compliance for the water-heating system is also required.

Combined Hydronic Space- and Water-Heating Systems

When the hydronic space-heating system serves the additional function of providing domestic hot water, the system is analyzed for its water heating performance as if the space heating function were separate. In other words, treat any hydronic system used for water heating the same as any other water-heating system. Input the correct water heater type, auxiliary input credit (if any) and specify the distribution system.

Compliance

An “effective” AFUE or HSPF rating is used to establish space-heating system efficiency. Refer to Chapter 6, Part 6.5 for an explanation of how both water-heating and space-heating system characteristics are accounted for, including the calculation of an Effective AFUE or Effective HSPF rating on the DHW-5 form.

Compliance for a hydronic or combined hydronic-heating system consists of five parts:

1. The water-heating device is typically a boiler or hot water heater.
2. A heat delivery device will be a fan coil, baseboard or radiant panel. Hot water baseboards and radiant panels are normally used for space heating only, and may provide compliance credits since there are no ducts.
3. Supply and return piping.
4. One or more pumps.
5. Controls. Elements of the controls required to operate the system may include a fan and/or pump relay, distribution system zone valves, boiler return water temperature control, and a delivery water temperature controller.

Radiant Floor System

One type of radiant panel distribution system is the radiant floor system, where space heating hot water pipes are set into a concrete slab floor or into a lightweight concrete topping slab laid over a raised floor. R-10 slab edge insulation to a depth of 16" is required for hydronic radiant floor systems in a concrete slab on grade.

NOTE:

The R-10 slab edge insulation is treated as an energy neutral feature. It is not assumed in compliance calculations for credit. R-0 slab edge insulation must be assumed in climate zones 1-15. R-7 is assumed in climate zone 16 only.)

Slab edge insulation applied to basement or retaining walls (with slab below grade) should be installed so that insulation starts at ground level and extends down the required distance.

Construction — Hydronic and Combined Hydronic Systems

Radiant Floor System/Slab Edge Insulation

When space heating hot water pipes are set into a concrete slab floor R-10 slab edge insulation to a depth of 16" is required. When space heating hot water pipes are set into a lightweight concrete topping slab laid over a raised floor, any portions of the topping slab directly adjacent to a retaining wall must have an R-10 insulation barrier between the topping slab and the wall. Slab edge insulation applied to basement or retaining walls (with slab below grade) should be installed so that insulation starts at ground level and extends down the required distance.

Inspection

Hydronic and Combined Hydronic Systems

Compliance is affected by:

- Water heater or boiler efficiency
- Length of pipe
- Pipe insulation thickness
- Rated input
- Pump Watts (for storage electric).
- Hot water baseboards and radiant panels may provide compliance credits since there are no ducts.
- R-10 slab edge insulation must be installed for a hydronic radiant slab floor heating system.

The system will consist of:

1. Water heating device—water heater or boiler.
2. A heat delivery device—fan coil, baseboard or radiant panel.
3. Supply and return piping.
4. One or more pumps.
5. Controls required to operate the system—may include a fan and/or pump relay, distribution system zone valves, boiler return water temperature control, and a delivery water temperature controller.

Examples

Hydronic and Combined Hydronic

My client wants a dedicated hydronic-heating system (space heating only), but a few things are unclear: (1) What piping insulation is required? (2) Can I use any compliance approach? (3) Do I have to insulate the slab with R-10 slab edge insulation? and (4) What special documentation must be submitted for this system type?

(1) The supply lines not installed within a concrete radiant floor must be insulated in accordance with Section 150(j)—R-4 on pipes that are 2 inches or less in diameter, R-6 for pipes greater than 2 inches in diameter.

(2) You can use any compliance approach; however, when using a prescriptive compliance approach, the AFUE or HSPF (as determined on the DHW-5) must meet the minimum efficiency of the selected Alternative Component Package. NOTE: CALRES requires that a boiler be used as the water heating device for a dedicated hydronic system.

(3) The R-10 slab edge insulation is only required when the distribution system is a radiant floor system (pipes in the slab). When this is the case R-10 insulation, installed to the lesser of 16 inches deep or the depth of the footing, is a mandatory measure (no modeling or credit).

(4) A DHW-5 worksheet is used to determine the system efficiency (AFUE or HSPF) and must be submitted with other compliance documentation for prescriptive compliance. As noted in Chapter 6, Table 6-2, approved programs perform the water heating calculations internally, so the DHW forms do not need to be submitted.

What are the slab edge insulation requirements for a hydronic-heating system with the hot water pipes in the slab?

The requirements for slab edge insulation can be found in Sections 150(l) and 151(f)1. of the standards and Chapters 2 and 8.

Material and installation specifications:

- R-10 installed to a depth of 16 inches or to the depth of the footing, whichever is less
- Protected from physical damage and ultra-violet light deterioration
- Water absorption rate no greater than 0.3 percent (ASTM-C-271)
- Water vapor permeance no greater than 2.0 per/inch (ASTM-E-96-90)

Modeling assumption:

Do not model or calculate R-10 insulation; it is a mandatory requirement for this type of heating system. Instead assume R-0 in climate zones 1 through 15, or R-7 in climate zone 16.

8.10 EVAPORATIVE COOLING

Introduction

Evaporative Cooling

Evaporative coolers provide cooling to a building by either direct contact with water (direct evaporative cooler), or a combination of a first stage heat exchanger to pre-cool building air temperature and a second stage with direct contact with water (indirect/direct evaporative cooler).

When selecting evaporative cooling, the following characteristics should be considered:

- Direct evaporative coolers in climates that are both hot and humid may result in uncomfortable indoor humidity levels.
- Indirect/direct evaporative coolers do not increase indoor humidity as much as direct systems, and would be unlikely to produce uncomfortable indoor humidity levels, even in hot, humid areas.
- Evaporative coolers may not reduce indoor temperatures to the same degree as air conditioning.

Credit for evaporative coolers is allowed in either single-family detached or single-family attached residences, not in multi-family buildings.

Compliance/ Plan Check

Evaporative Cooling

Evaporative coolers may be used with any compliance approach. Using a performance approach, credit is provided in either single-family detached or single-family attached residences. To take the credit, assume that there is a standard central air conditioner (with R-4.2 ducts in the attic) with an SEER rating of 11.0 for direct systems and 13.0 for indirect/direct systems. The same SEERs can be used for evaporative coolers installed with or without backup air conditioning [see multiple HVAC systems in Chapter 5 (computer compliance)].

Construction

Evaporative Cooling

To receive credit at the efficiencies listed above, the evaporative cooling system must meet the following requirements:

Eligibility and Installation Criteria

1. Evaporative cooler ducts must satisfy all requirements that apply to air conditioner ducts.
2. Thermostats are required. If air conditioning is installed in conjunction with an evaporative cooler a two-stage thermostat with time lockout is required.
3. Automatic relief venting must be provided to the building.

5. Evaporative coolers must be permanently installed. No credits are allowed for removable window units.
6. Evaporative coolers must provide minimum air movement at the minimum stated air delivery rate certified with the tests conducted in accordance with the Air Movement and Control Association (AMCA) Standard 210 (see Table 8-1 below).

Table 8-1: Minimum Air Movement Requirements for Evaporative Coolers

	Minimum Air Movement[1] (cfm/sf)	
Climate Zones	Direct	Indirect/Direct
1 - 9	1.5	1.2
10 - 13	3.2	1.6
14 - 15	4.0	2.0
16	2.6	1.3

1 If backup air conditioning is installed, the minimum air movement for all climate zones is 1.0 cfm/sf.

8.11 GEOTHERMAL (GROUND SOURCE) HEAT PUMP

Introduction

Geothermal/Ground Source Heat Pumps

A geothermal or ground source heat pump uses the earth as a source of energy for heating and as a sink for energy when cooling. Some systems pump water from an acquifer in the ground and return the water to the ground after transferring heat from or to the water. A few systems use refrigerant directly in a loop of piping buried in the ground. Those heat pumps that use either a water loop or pump water from an acquifer have efficiency test methods that are accepted by the Energy Commission. These efficiency values are certified to the Energy Commission by the manufacturer and are expressed in terms of heating Coefficient of Performance (COP) and cooling Energy Efficiency Ratio (EER).

Compliance/ Plan Check

Geothermal Heat Pump

To determine compliance with the residential standards, the COP and EER must be converted to HSPF and SEER

When equipment is not tested for SEER, the EER may be used in place of the SEER. When heat pump equipment is not tested for HSPF:

$$HSPF = (3.2 \times COP) - 2.4$$

Construction

Geothermal Heat Pump

The efficiency of geothermal heat pump systems is dependent on how well the portion of the system in the ground works. Manufacturer's recommendation must be followed carefully to assure that the system is appropriately matched to the soil types and weather conditions.

Local codes may require special installation practices for the ground installed portions of the system. Verify that the system will meet local code conditions before choosing this type of system to meet the standards.

8.12 DUCT (HVAC) EFFICIENCY

Introduction

Duct Efficiency

Compliance credit for duct (HVAC) efficency is covered in detail in Chapter 4. Appendix J, *Procedures For HVAC System Design and Installation,* gives optional additional details on the design and installation of energy efficient duct systems.

8.13 RADIANT BARRIERS

Introduction

Radiant Barriers

A radiant barrier is material that either reflects radiant heat or inhibits the emission of radiant heat. Aluminum foil or plastic with a reflective film coating are examples of such a material. Installation of radiant barriers has the greatest savings potential during the cooling season, although they provide some heating benefit as well.

The Energy Commission has approved an energy credit for radiant barriers meeting specific eligibility and installation criteria.

Compliance/ Plan Check

Radiant Barrier

The radiant barrier energy credit is an adjustment to the ceiling U-value when the ceiling is adjacent to an attic with a radiant barrier. The credit is automatically applied by modeling a radiant barrier in an approved computer program with this optional capability. (See the Alternative Calculation Methods (ACM) Manual for Residential Buildings for the equations used to apply the radiant barrier credit.)

NOTE:

If HVAC ducting is present in the attic, an *additional* energy credit is allowed. See ACM Manual, Appendix F.

Indicate the radiant barrier on the CF-1R under "special features."

Construction

Radiant Barrier

Below are the parameters for receiving credit for a radiant barrier, including criteria for the installation, ventilation and material, all of which contribute to the performance of the radiant barrier.

Installation

The following conditions are required:

- Securely installed in a permanent manner with the shiny side (the side with low emittance) facing down toward the attic floor.
- Installed to the roof truss/rafters (top chords) in ***any*** of the following methods, with the material:
  - >> Draped over the truss/rafter (the top chords) before the upper roof decking is installed.
  - >> Spanning between the truss/rafters (top chords) and secured (stapled) to each side.
  - >> Secured (stapled) to the bottom surface of the truss/rafter (top chord). A minimum air space must be maintained between the top surface of the radiant barrier and roof decking of not less than 1.5 inches at the center of the truss/rafter span.
  - >> Attached [laminated] directly to the underside of the roof decking. The radiant barrier must be laminated and perforated by the manufacturer to allow moisture/vapor transfer through the roof deck.

See Figure 8-8 for several examples of radiant barrier installations.

- ASTM C-1158-90 is the Standard for Use and Installation of radiant barrier systems.
- Installed according to appropriate requirements:
  - >> C-1224-93 Standard Specification for Reflective Indulstion for Building Applications;
  - >> C-727-90 Standard Practice for Installation and Use of Reflective Insulation in Building Constructions; or
  - >> C-1313-95 Standard Specification for Sheet Radiant Barriers for Building Construction Applications.
- The radiant barrier must be installed to cover all gable end walls and other vertical surfaces in the attic.
- The manufacturer of the radiant barrier must provide test data, documentation, or product labeling showing conformance to certification requirements.

Ventilation

Attic ventilation must be provided to:

- Conform to manufacturer's instructions.
- Provide a minimum free ventilation area of not less than one square foot of vent area for each 150 square feet of attic floor area.
- No less than 30 percent upper vents.
- A minimum gap of 3.5 inches provided at the bottom of the radiant barrier and at the top of the ceiling insulation (except for method 4 above).
- A minimum of six (6) inches (measured horizontally) left at the roof peak to allow hot air to escape from the air space between the roof decking and the top surface of the radiant barrier (except for method 4 above).
- Ridge vents or gable end vents are recommended to achieve the best performance. The material should be cut to allow for full air flow to the venting.

Emissivity

- The emissivity of the radiant barrier must be equal to or less than 0.05. ASTM Test Method C-1371-97 is the Standard.

STATE CERTIFICATION

- The radiant barrier manufacturer must be licensed, and the product certified, by the Department of Consumer Affairs, Bureau of Home Furnishings and Thermal Insulation as indicated in the *Consumer Guide and Directory of Certified Insulation Material*.

Inspection

Radiant Barrier

If a radiant barrier was used for compliance credit, check the installation guidelines provided above for the builder. Especially critical are the ventilation and air space requirements that enable the radiant barrier to perform as expected. The product must be labeled as conforming to minimum emissivity requirements.

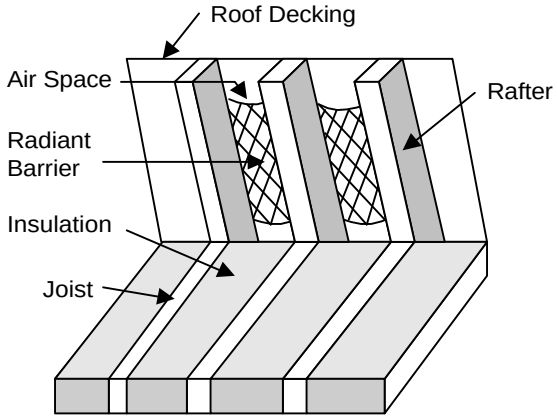

Method 1: Radiant Barrier Draped Over Top of Truss/Rafter

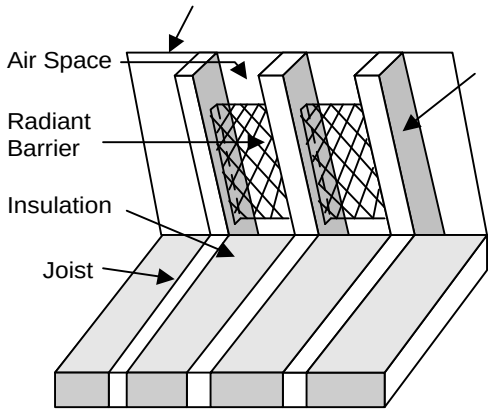

Method 2: Radiant Barrier Attached Between Truss/Rafters

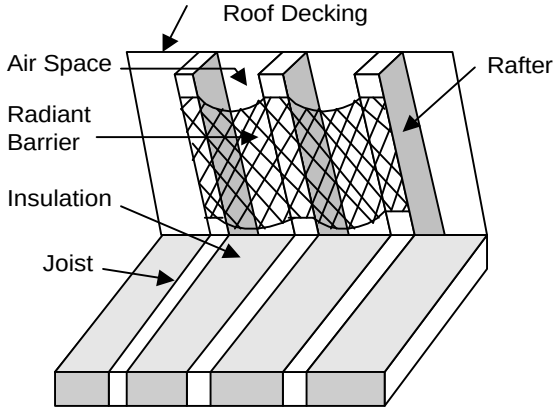

Method 3: Radiant Barrier Attached to Bottom of Truss/Rafter

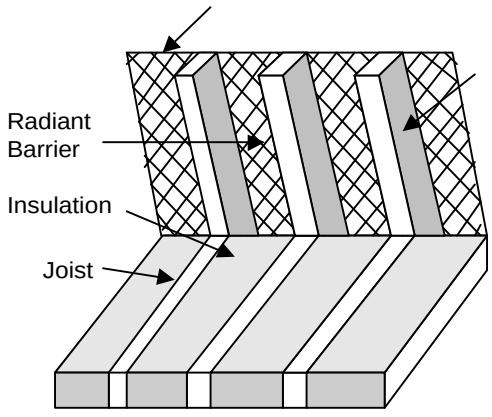

Method 4: Radiant Barrier Attached to Underside of Roof Deck

Figure 8-8: Radiant Barriers

8.14 INFILTRATION REDUCTION CREDIT–AIR RETARDERS/HOUSEWRAPS

Introduction

Air Retarders (AR)/Housewraps

Infiltration and exfiltration are the intentional or unintentional replacement of conditioned indoor air by unconditioned outdoor air., creating heat gains or heat losses for the building. This exchange of indoor and outdoor air occurs for all buildings to a greater or lesser extent.

Air infiltration or building wrap products do not block the flow of air entirely, allowing water vapor from the inside of the house to exit the building. These products repel liquid water but allow water vapor to pass freely. Water that gets behind the exterior finish material of your house flows down the wrap and exits just below the top of your foundation or slab.

The product is installed on the warm-in-winter side of the insulation and is not recommended in some climates. Other states building codes do not recommend air retarders in hot and humid climate areas where the wet bulb temperature is 67°F or higher for 3,000 or more hours during the warmest six consecutive months of the year. Particularly in such climates, some type of "drainage plane" should be installed on the exterior of the studs. This could be simply 30-pound felt paper, or any low-permeability sheathing material or insulation board.

Compliance/
Plan Check

Air Retarders (AR)
No Diagnostic Testing

The computer programs allow infiltration reduction credit for an air retarding wrap without the need for a blower door test. An air retarding wrap can qualify for a default reduction in Specific Leakage Area (SLA) of 0.50 without confirmation by diagnostic testing (called a prescriptive credit).

The air retarder system must be tested and labeled by the manufacturer to comply with ASTM E1677-95, *Standard Specification for an Air Retarder (AR) Material or system for Low-Rise Framed Building Walls* and have a minimum perm rating of 10.

This credit may not be taken if the user chooses a diagnostic testing target for reduced infiltration. The prescriptive infiltration reduction credit and the air retarder specifications listed above must be listed in the *Special Features and Modeling Assumptions* listings of the CF-1R and CF-2R. The air retarder specifications listed above must also be reported in the *Special Features and Modeling Assumptions*.

Compliance/
Plan Check

Air Retarders
With Diagnostic Testing

If the diagnostic testing during construction is specified for either reduced infiltration or reduced infiltration with mechanical ventilation, the ACM must require the user to choose an input menu to enter a target value for measured $CFM50_H$ and, if mechanical ventilation will be used, the wattage and cfm of the ventilation supply and exhaust fans. The AR is not modeled, only the effects of the AR, as represented by the targeted infiltration. The diagnostic testing shall be performed using fan pressurization of the building in accordance with ASTM E 779-1987 (Reapproved 1992), *Standard Test Method for Determining Air Leakage Rate by Fan Pressurization*. The specifications for diagnostic testing and the target values specified above must be reported in the *HERS Required Verification* listings on the CF-1R and CF-2R.

Construction

Air Retarders/Housewraps

Installation

Tape all seams, around windows and other penetrations, and at the slab interface with sheathing tape.

Material/Manufacturer Specifications

An air retarder meeting ASTM E1677 and having a minimum vapor permeance of 10 perms. Test results must be based on the appropriate construction type, either open stud (installed directly over the studs) or shear wall.

Conditions under which the product was tested and the manufacturer installation procedures must be consistent, particularly in the following areas:

1. Installation procedures for seams.
2. If testing is conducted with a cladding over the housewrap or weather barrier, the cladding becomes part of the retarder system and the entire system (housewrap and cladding) is considered the air retarder, not the housewrap by itself.
3. Specifications for how the top and bottom of the wall shall be treated with regard to caulking, gasketing, or tape.

Vapor Permeability Minimums

A minimum water vapor permeance of 10 perms is suggested to reduce the potential for condensation and for trapping moisture. As stated in ASTM-E1677, one of the purposes of an air retarder is to “reduce leakage of moisture laden air through the opaque wall assembly that can create condensation /frost within a wall assembly”. Although moisture may still enter the wall assembly by other means, increasing the vapor permeability (or breathability) of the housewrap or weather resistive membrane provides a level of protection by enhancing the drying potential of a wall.

General Installation Guidelines

Installation of whole-house products requires attention to detail. These products need to be installed just like the old tar paper - start from the bottom and let subsequent pieces overlap the lower ones. All seams must be sealed with a special adhesive tape sold by the manufacturer. The wrap needs to be in place before doors and windows are installed. In fact, it should be installed prior to the placement of the second top wall plate that sits immediately below the roof rafters.

By sandwiching the wrap between the double top wall plate, you virtually eliminate the entry of any soffit down drafts behind the house wrap. Be sure the house wrap extends over the top of the foundation by at least 1 inch.

Some house wrap products can hide the location of wall studs. If you use such a product, be sure to align the outer wall stud markings on the house wrap with the studs. Or consider using a translucent house wrap. Either option will make the job of the bricklayers and siding installers more manageable.

Inspection

Air Retarders without Diagnostic Testing

Inspection for prescriptive credits:

- Sheets of wrap applied continuously
- All tears or breaks repaired with tape
- All horizontal seams lapped in a shingle-like manner and taped
- All vertical seams lapped and taped
- All windows and penetrations taped or caulked
- Wrap taped or otherwise sealed at slab junction.

8.15 LOG HOMES

Introduction

Log Homes

Log homes are an alternative construction type used throughout the state. Log home companies promote the aesthetic qualities of solid wood construction and can "package" the logs and deliver them directly to a building site. Some companies provide log wall, roof and floor systems with special insulating "channels" or other tech-

niques to minimize the effect of air infiltration between log members and to increase the thermal benefit of the logs alone.

Uninsulated eight-inch solid logs can have an overall thermal resistance equivalent to R-11 insulation (the type of wood is a factor in the R-value). If the wood type of the log is not known, contact the manufacturer to obtain this information.

NOTE:

The mandatory requirement for a minimum of R-13 wall insulation does not apply to unframed walls (e.g., log walls, mass walls).

Compliance/ Plan Check

Log Homes

The thermal mass effects of log home construction can be accounted for within the computer compliance approach (Chapter 5) or prescriptive packages A or C (Chapter 3). Although log walls are not required to be insulated to the level of a framed wall, the effects of the thermal mass (interior and exterior) can compensate for the lack of insulation.

In the computer methods, thermal mass is accounted for when the building envelope is modeled with the specific type of wood (cedar, pine or fir) found in the construction materials section of the computer program. The computer determines the heat capacity of the solid wood/log based upon the wood type and its thickness.

See Chapter 5 and the compliance supplement for the specific computer method being used.

Air infiltration between log walls can be considerably different between manufacturers depending upon the construction technique used. For purposes of compliance, infiltration is always assumed to be equivalent to a wood frame building.

8.16 SOLAR ENERGY SYSTEMS

Introduction

Solar Space Conditioning

This section explains how to demonstrate compliance for solar space conditioning, which requires computer performance compliance (see Chapter 5) and an f-Chart program for analyzing the solar contribution.

Compliance for solar *water*-heating systems is explained in Chapter 6.

Compliance/ Plan Check

Active Solar Space-Heating, f-Chart

To calculate the solar contribution of an active solar space-heating system in meeting the building's annual load, an f-Chart analysis must be performed. In addition, only an approved computer method may be used in conjunction with f-Chart to estimate energy savings of the solar system (see Chapter 6). The computer method should have the capability to report monthly data on space-heating loads. If not, the user will have to input into f-Chart the monthly temperature and heating degree day information for the city where the building is located, as well as the annual UA load of the building.

Approved versions of f-Chart programs are listed in Appendix F.

When using f-Chart, the fixed ambient air and water-main temperatures listed in Chapter 6, Table 6-11 must be used, as well as the modeling values listed in Table 8-2 below.

For active solar space-heating systems, f-Chart analytical methods predict the fraction of the total load which is nonpurchased energy (FNP). FNP is similar to the "solar fraction" (FDHW) predicted by these methods for water heating (see Chapter 6, Part 6.3). When using f-Chart to calculate the performance of active solar space heating, all the appropriate modeling conditions and guidelines indicated by an f-Chart program user's manual

must be followed. The steps for showing compliance is listed below:

1. Model the building using an approved computer method, and print out monthly space-heating loads as well as the annual source Proposed Design Energy Use.
2. Model the active solar system with f-Chart using the monthly space-heating loads from Step 1 as inputs. (Make sure the monthly loads do not include the efficiency of the space-heating system.)
3. Determine the annual space-heating energy savings provided by the active solar system: multiply the annual space-heating energy use load of the proposed design by the FNP, and divide by the AFUE of the proposed heating system.
4. Determine the adjusted space-heating energy use by subtracting the result of Step 3 from the annual space-heating source of the Proposed Design Energy Use (Step 1).
5. Determine whether the building complies by comparing the adjusted total of the Proposed Design Energy Use to the total energy budget of the standard design.

Construction

Solar Space Heating

Solar collectors usually are mounted in rows, on the roof or the south wall of a house. Collectors may also be ground mounted on a collector support structure.

Collectors should face true south, not magnetic south (compass are magnetic south). However, a deviation of 30 degrees or less from true south will not substantially reduce system performance. Collectors should be tilted at an angle equal to the local latitude, plus 15 degrees. Collectors receive the most solar radiation between 9 a.m. and 3 p.m. and should not be shaded by trees, buildings, hills or any other obstructions. Performance can be significantly reduced if even a small portion of the collector area is shaded.

Table 8-2: Active Solar Space-Heating Analysis -- Fixed Input Parameters for f-Chart

Input	Name	Value
C9	Incidence Angle Modifier Constant	0.00
C14	Ground Reflectance	0.20 (or up to 0.90 if documented)
S4	Environment Temperature	70ºF
L3	Design Monthly Space-heating Loads loads taken from computer method	Proposed design monthly space-heating analysis report
L4	Tank Set Temperature	135ºF
L5	Water Main Temperature	See Chapter 6, Table 6-11
S5	Hot Water Auxiliary Tank UA	0.00

Inspection

Solar Space Heating

As explained in Chapter 6, an f-Chart analysis is required for active solar space-heating systems. Credit for solar space conditioning is applied directly to the energy budget, therefore, any change impacting the effectiveness of the solar-heating system will affect compliance.

8.17 STRAW BALE CONSTRUCTION

Introduction

Straw Bale Construction

In 1995, the California Legislature passed AB1314, a bill that authorizes all California jurisdictions to adopt building codes for houses with walls constructed of straw bales. The bill provided guidelines for moisture content, bale density, seismic bracing, weather protection, and other structural requirements. In order to demonstrate compliance with the Standards the Energy Commission, in conjunction with other research and testing facilities, determined the thermal properties needed for compliance. The thermal mass benefit of straw bale construction can only be credited through the use of the computer performance compliance approach by modeling straw bale construction using the heat storage and heat capacity characteristics of the straw bales given below.

Compliance/
Plan Check

Straw Bale Construction

Straw bales that are 23 inches by 16 inches are assumed to have a thermal resistance of R-30. (Performance data on other sizes of bales was not available at the time of publication of this manual.) The minimum density of load bearing walls is 7.0 pounds per cubic foot, this value or the actual density may be used for modeling straw bale walls in computer compliance approaches. Specific heat is set to 0.32 Btu/lb/°F. Volumetric heat capacity (used in some computer programs) is calculated as density times specific heat (at a density of 7 lb/ft^3 the volumetric heat capacity is 2.24 Btu/ft^3/°F.

Construction

Straw Bale Construction

The minimum dimension of the straw bales when placed in the walls must be 22 inches by 16 inches. There are no restrictions on how the bales are stacked.

Inspection

Straw Bale Construction

Due to the higher resistance to heat flow across the grain of the straws, a bale laid on edge with a nominal 16 inch horizontal thickness has the same R-Value (R-30) as a bale laid flat. When the bale is laid flat the nominal horizontal wall thickness is 23 inches but the heat flows along the grain of the straws resulting in the same R-30 thermal resistance for the bale. Thermal performance data on other sizes of bales was not available at the time of publication of this manual.

Appendix A
Compliance Forms

The following forms are included for use with the low-rise Residential Standards:

*CF-1R – Certificate of Compliance***	*2 Pages*
*MF-1R – Mandatory Measures Checklist***	*2 Pages*
WS-1R – Thermal Mass Worksheet	*1 Page*
*WS-2R – Interpolation, Weighted Average & Additions space holder - form deleted***	*1 Page*
*WS-3R – Fenestration Worksheet***	*1 Page*
*DHW-1 – Water Heating Worksheet**	*1 Page*
*DHW-2A – Single Fanmily w/Multiple Heaters**	*1 Page*
*DHW-2B – Multi-Family Buildings**	*1 Page*
DHW-3 – Indirect & Large Storage Gas Water Heaters	*1 Page*
DHW-4 –Auxillary Inputs (Solar & Wood Boilers)	*2 Pages*
DHW-5 – Combined Hydronic Space and Water Heating	*1 Page*
Form 3R – Proposed Construction Assembly	*1 Page*
*Form S – Solar Heat Gain Coefficient (SHGC) Worksheet***	*2 Pages*
*CF-4R – Certificate of Field Verification & Diagnostic Testing***	*4 Pages*
*CF-6R – Installation Certificate***	*7 Pages*
IC-1 – Insulation Certificate	*1 Page*

** Substantially Changed.
* Minor Changes

CERTIFICATE OF COMPLIANCE: RESIDENTIAL (Page 1 of 2) CF-1R

Project Title

Date

Project Address

Building Permit #

Documentation Author Telephone

Plan Check / Date

Compliance Method (Package or Computer) Climate Zone

Field Check / Date

Enforcement Agency Use Only

GENERAL INFORMATION

Total Conditioned Floor Area _____ ft^2 Average Ceiling Height: _____ ft

Conditioned Slab Floor Area _____ ft^2

Building Type: _____ Single Family _____ Addition

(check one or more) _____ Multi-Family _____ Existing-Plus-Addition

Front Orientation: _____ North / South / East / West / All Orientations

(input front orientation in degrees from True North and circle one)

Number of Stories _____

Number of Dwelling Units: _____

Floor Construction Type: Slab/Raised Floor (circle one or both)

BUILDING SHELL INSULATION

Component Type	Frame Type wd = wood stl = steel	Cavity Insulation R-Value	Sheathing Insulation R-Value	Total R-Value[1]	Assembly U-Value[1]	Location/Comments (attic, garage, typical, etc.)
Wall						
Wall						
Roof						
Roof						
Floor						
Floor						
Slab Edge						

FENESTRATION

Shading Devices

Fenestration #/Type/Pos.	Orien-tation	Area (ft^2)	Fenestration U-Value	Fenestration SHGC	Interior Shading Att.[2]	Exterior Shading Att.	Overhangs /Fins
Front					Standard		
Front					Standard		
Left					Standard		
Left					Standard		
Rear					Standard		
Rear					Standard		
Right					Standard		
Right					Standard		
Skylight					Standard		
Skylight					Standard		

[1] For prescriptive compliance, Total R-Value and Assembly U-Value are not required for a wood-framed wall that meets cavity R-value insulation requirement for the Prescriptive Package.

[2] For prescriptive compliance, there are no credits for any interior shading except the default or "Standard" drapery. These default interior shading devices (draperies) need not be installed for compliance purposes.

Project Title _____ Date _____

HVAC SYSTEMS

Note: Input hydronic or combined hydronic data under Water Heating Systems, except Design Heating Load.

Heating Equipment Type (furnace, heat pump, etc.)	Minimum Efficiency (AFUE or HSPF)	Distribution Type and Location (ducts, attic, etc.)	Duct or Piping R-Value	Thermostat Type	Heat Pump Configuration (split or package)

Cooling Equipment Type (air conditioner, heat pump, evap. cooling)	Minimum Efficiency (SEER)	Duct Location (attic, etc.)	Duct R-Value	Thermostat Type	Heat Pump Configuration (split or package)

WATER HEATING SYSTEMS

Water Heater Type	Distribution Type	Number in System	Rated[1] Input (kW or Btu/hr)	Tank Capacity (gallons)	Energy[1] Factor or Recovery Efficiency	Standby[1] Loss (%)	External Tank Insulation R-Value

1. For small gas storage water heaters (rated inputs of less than or equal to 75,000 Btu/hr), electric resistance, and heat pump water heaters, list Energy Factor. For large gas storage water heaters (rated input of greater than 75,000 Btu/hr), list Rated Input, Recovery Efficiency and Standby Loss. For instantaneous gas water heaters, list rated input and recovery efficiencies.

SPECIAL FEATURES and MODELING ASSUMPTIONS (Add extra sheets if necessary)

Including Thermal Mass (thermal mass type, covering, thickness, and description)

_____

_____

COMPLIANCE STATEMENT

This certificate of compliance lists the building features and performance specifications needed to comply with Title 24, Parts 1 and 6 of the California Code of Regulations, and the administrative regulations to implement them. This certificate has been signed by the individual with overall design responsibility. When this certificate of compliance is submitted for a single building plan to be built in multiple orientations, any shading feature that is varied is indicated in the Special Features / Remarks section.

Designer or Owner (per Business and Professions Code)

Name: _____
Title/Firm: _____
Address: _____
_____
Telephone: _____
Lic. #: _____

_____
(signature) (date)

Documentation Author

Name: _____
Title/Firm: _____
Address: _____
_____
Telephone: _____

_____
(signature) (date)

Enforcement Agency

Name: _____
Title: _____
Agency: _____
Telephone: _____

_____
(signature / stamp) (date)

MANDATORY MEASURES CHECKLIST: RESIDENTIAL (Page 1 of 2) MF-1R

Note: Lowrise residential buildings subject to the Standards must contain these measures regardless of the compliance approach used. Items marked with an asterisk (*) may be superseded by more stringent compliance requirements listed on the Certificate of Compliance. When this checklist is incorporated into the permit documents, the features noted shall be considered by all parties as minimum component performance specifications for the mandatory measures whether they are shown elsewhere in the documents or on this checklist only.

Instructions: Check or initial applicable boxes when completed or enter N/A if not applicable.

DESCRIPTION	DESIGNER	ENFORCEMENT
Building Envelope Measures:		
* §150(a): Minimum R-19 ceiling insulation.		
§150(b): Loose fill insulation manufacturer's labeled R-Value.		
* §150(c): Minimum R-13 wall insulation in wood framed walls or equivalent U-value in metal frame walls (does not apply to exterior mass walls).		
* §150(d): Minimum R-13 raised floor insulation in framed floors.		
§150(l) : Slab edge insulation - water absorption rate no greater than 0.3%, water vapor transmission rate no greater than 2.0 perm/inch.		
§118: Insulation specified or installed meets insulation quality standards. Indicate type and form.		
§116-17: Fenestration Products, Exterior Doors, and Infiltration/Exfiltration Controls 1. Doors and windows between conditioned and unconditioned spaces designed to limit air leakage. 2. Fenestration products (except field-fabricated)have label with certified U-value, certified Solar Heat Gain Coefficient (SHGC), and infiltration certification. 3. Exterior doors and windows weatherstripped; all joints and penetrations caulked and sealed.		
§150(g): Vapor barriers mandatory in Climate Zones 14 and 16 only.		
§150(f): Special infiltration barrier installed to comply with § 151 meets Commission quality standards.		
§150(e): Installation of Fireplaces, Decorative Gas Appliances and Gas Logs. 1. Masonry and factory-built fireplaces have: a. Closeable metal or glass door b. Outside air intake with damper and control c. Flue damper and control 2. No continuous burning gas pilot lights allowed.		
Space Conditioning, Water Heating and Plumbing System Measures:		
§110-§113: HVAC equipment, water heaters, showerheads and faucets certified by the Commission.		
§150(h): Heating and/or cooling loads calculated in accordance with ASHRAE, SMACNA or ACCA.		
§150(i): Setback thermostat on all applicable heating and/or cooling systems.		
§150(j): Pipe and tank insulation 1. Storage gas water heaters rated with an Energy Factor less than 0.58 must be externally wrapped with insulation having an installed thermal resistance of R-12 or greater. 2. First 5 feet of pipes closest to water heater tank, non-recirculating systems, insulated (R-4 or greater) 3. Back-up tanks for solar system, unfired storage tanks, or other indirect hot water tanks have R-12 external insulation or R-16 combined internal/external insulation. 4. All buried or exposed piping insulated in recirculating sections of hot water systems. 5. Cooling system piping below 55º F insulated. 6. Piping insulated between heating source and indirect hot water tank.		

MANDATORY MEASURES CHECKLIST: RESIDENTIAL (Page 2 of 2) MF-1R

Note: Lowrise residential buildings subject to the Standards must contain these measures regardless of the compliance approach used. Items marked with an asterisk (*) may be superseded by more stringent compliance requirements listed on the Certificate of Compliance. When this checklist is incorporated into the permit documents, the features noted shall be considered by all parties as minimum component performance specifications for the mandatory measures whether they are shown elsewhere in the documents or on this checklist only.

Instructions: Check or initial applicable boxes when completed or enter N/A if not applicable.

DESCRIPTION	DESIGNER	ENFORCEMENT
Space Conditioning, Water Heating and Plumbing System Measures: (continued)		
* §150(m): Ducts and Fans 1. All ducts and plenums constructed, installed, insulated, fastened, and sealed to comply with the ICBO 1997 UMC sections 601 and 603; ducts insulated to a minimum installed R-4.2 or ducts enclosed entirely within conditioned space. Openings shall be sealed with mastic, tape, aerosol sealant or other duct closure system that meets the **applicable** requiremetns of UL181, UL181A, or UL181B and other applicable specified tests for longevity given in §150(m).. 2. Exhaust fan systems have back draft or automatic dampers. 3. Gravity ventilating systems serving conditioned space have either automatic or readily accessible, manually operated dampers.		
§114: Pool and Spa Heating Systems and Equipment. 1. System is certified with 78% thermal efficiency, on-off switch, weatherproof operating instructions, no electric resistance heating and no pilot light. 2. System is installed with: a. At least 36" of pipe between filter and heater for future solar heating. b. Cover for outdoor pools or outdoor spas. 3. Pool system has directional inlets and a circulation pump time switch.		
§115: Gas fired central furnaces, pool heaters, spa heaters or household cooking appliances have no continuously burning pilot light. (Exception: Non-electrical cooking appliances with pilot < 150 Btu/hr)		
Lighting Measures:		
§150(k)1.: Luminaires for general lighting in kitchens shall have lamps with an efficacy of 40 lumens/watt or greater for general lighting in kitchens. This general lighting shall be controlled by a switch on a readily accessible lighting control panel at an entrance to the kitchen.		
§150(k)2.: Rooms with a shower or bathtub must either have at least one luminaire with lamps with an efficacy of 40 lumens/watt or greater switched at the entrance to the room or one of the alternatives to this requirement allowed in §150(k)2.; and recessed ceiling fixtures are IC (insulation cover) approved.		

THERMAL MASS WORKSHEET WS-1R

Project Title _____ Date _____

INTERIOR THERMAL MASS: METHOD B

Method B is one of the two possible options for calculating interior mass as explained in Section 4.2 of the *Residential Manual* (*RM*). The other option, Method A, is a simplified method to take thermal mass credit for concrete slab-on-grade only. This worksheet is not required for Method A. Method B must be used to take thermal mass credit for any mass elements other than concrete slab-on-grade.

Calculate the Interior Mass/CFA value using the worksheet space below. Look up the Unit Interior Mass Capacity (UIMC) for each interior mass surface in the *RM* Table 4-9a, 4-9b and 4-10. Include the interior surfaces of exterior mass walls. For interior mass walls exposed on both (two) sides to conditioned space, enter the surface area of only one side. Include the inside surfaces of exterior mass walls as explained in Section 4.2 of the *RM*.

Description	Mass Area		Unit Interior Mass Capacity		Interior Mass Capacity
_____	_____	×	_____	=	_____
_____	_____	×	_____	=	_____
_____	_____	×	_____	=	_____
_____	_____	×	_____	=	_____
_____	_____	×	_____	=	_____
_____	_____	×	_____	=	_____
_____	_____	×	_____	=	_____
_____	_____	×	_____	=	_____
				_____ ÷	_____ = _____
				Total	CFA Interior Mass/CFA

EXTERIOR WALL THERMAL MASS

Calculate the Exterior Wall Mass of all exterior walls. Look up the Exterior Mass Factor for each opaque wall element from *RM* table 4-10. Only exterior wall mass surfaces may be included in this calculation.

Note: Conventional framed walls cannot be used for Exterior Thermal Mass credit.

Description	Opaque Wall Area		Exterior Mass Factor		
_____	_____	×	_____	=	_____
_____	_____	×	_____	=	_____
_____	_____	×	_____	=	_____
_____	_____	×	_____	=	_____
_____	_____	×	_____	=	_____
_____	_____	×	_____	=	_____
				_____ ÷	_____ = _____
				Total	Total Opaque Wall Area Exterior Wall Mass

FORM WS-2R

INTERPOLATION, WEIGHTED AVERAGE & ADDITIONS

is no longer valid and has intentionally been deleted from the
July 1, 1999 edition of the Residential Manual

FENESTRATION WORKSHEET: HEAT LOSS (Part 1 of 1) WS-3R

Project Title _____ Date _____

Area-Weighted Average U-Value

Description	Orientation	U-Value		Fenestration Area		U-Value × Area
			×		=	
			×		=	
			×		=	
			×		=	
			×		=	
			×		=	
			×		=	
			×		=	
			×		=	
			×		=	
			×		=	
			×		=	
			×		=	
			×		=	
			×		=	
			×		=	
		Total:				
			÷		=	
		Total U-Value × Area		Total Fenestration Area		Average U-Value

Total Percent Fenestration

Total Fenestration Area	×	100 Multiplier	÷	Conditioned Floor Area	=	Total Percent Fenestration
						%

WATER HEATING WORKSHEET DHW-1

Project Title _____ Date _____

No. of Different Water Heater Types: _____ Total No. of Water Heaters: _____ Conditioned Floor Area (CFA): _____ft^2

Notes: For single family dwellings with multiple water heaters, also submit DHW-2A. For multi-family buildings, also submit DHW-2B.

Heater Type #_____ Data

A. **Water Heater Type** (check one)
- ___ Storage Gas
- ___ Large Storage Gas
- ___ Storage Electric
- ___ Storage Heat Pump
- ___ Instantaneous Gas
- ___ Instantaneous Electric
- ___ Indirect Gas

B. **Manufacturer** _____
C. **Model No.** _____
D. **Energy Factor** _____
E. **Gallons** _____
F. **Pilot Btu/hr** _____
G. Thermal **Eff.** _____

H. **Auxiliary Input** (check one or both)
- ___ Wood Stove
- ___ Solar, Active or Passive

I. **Distribution System** (check one)
- ___ Standard
- ___ Hot Water Recovery (HWR)
- ___ Point of Use (POU)
- ___ Pipe Insulation (PI)
- ___ Recirculation: No Control
- ___ Recirculation: Timer
- ___ Recirculation: Temp.
- ___ Recirculation: Time/Temp.
- ___ Recirculation: Demand
- ___ HWR + Recirculation: Demand
- ___ PI + Recirculation: Demand

Energy Use Calculation

1a. Standard Recovery Load _____ (from Table 6-5 or DHW 2a or 2b)
1b. Distribution Credit/Penalty _____ (from Table 6-6)
1c. Solar Energy Credit _____ (from DHW-4)
1d. Adjusted Recovery Load _____ (1a - 1b - 1c)
2a. Basic Energy Use _____ (from Table 6-7)
2b. Wood Stove Boiler Credit _____ (from DHW-4)
2c. **Proposed Energy Use** (2a - 2b) ☐
3. **Standard Energy Use** (from Table 6-5) ☐

Heater Type #_____ Data

A. **Water Heater Type** (check one)
- ___ Storage Gas
- ___ Large Storage Gas
- ___ Storage Electric
- ___ Storage Heat Pump
- ___ Instantaneous Gas
- ___ Instantaneous Electric
- ___ Indirect Gas

B. **Manufacturer** _____
C. **Model No.** _____
D. **Energy Factor** _____
E. **Gallons** _____
F. **Pilot Btu/hr** _____
G. Thermal **Eff.** _____

H. **Auxiliary Input** (check one or both)
- ___ Wood Stove
- ___ Solar, Active or Passive

I. **Distribution System** (check one)
- ___ Standard
- ___ Hot Water Recovery (HWR)
- ___ Point of Use (POU)
- ___ Pipe Insulation (PI)
- ___ Recirculation: No Control
- ___ Recirculation: Timer
- ___ Recirculation: Temp.
- ___ Recirculation: Time/Temp.
- ___ Recirculation: Demand
- ___ HWR + Recirculation: Demand
- ___ PI + Recirculation: Demand

Energy Use Calculation

1a. Standard Recovery Load _____ (from Table 6-5 or DHW 2a or 2b)
1b. Distribution Credit/Penalty _____ (from Table 6-6)
1c. Solar Energy Credit _____ (from DHW-4)
1d. Adjusted Recovery Load _____ (1a - 1b - 1c)
2a. Basic Energy Use _____ (from Table 6-7)
2b. Wood Stove Boiler Credit _____ (from DHW-4)
2c. **Proposed Energy Use** (2a - 2b) ☐
3. **Standard Energy Use** (from Table 6-5) ☐

Heater Type #_____ Data

A. **Water Heater Type** (check one)
- ___ Storage Gas
- ___ Large Storage Gas
- ___ Storage Electric
- ___ Storage Heat Pump
- ___ Instantaneous Gas
- ___ Instantaneous Electric
- ___ Indirect Gas

B. **Manufacturer** _____
C. **Model No.** _____
D. **Energy Factor** _____
E. **Gallons** _____
F. **Pilot Btu/hr** _____
G. Thermal **Eff.** _____

H. **Auxiliary Input** (check one or both)
- ___ Wood Stove
- ___ Solar, Active or Passive

I. **Distribution System** (check one)
- ___ Standard
- ___ Hot Water Recovery (HWR)
- ___ Point of Use (POU)
- ___ Pipe Insulation (PI)
- ___ Recirculation: No Control
- ___ Recirculation: Timer
- ___ Recirculation: Temp.
- ___ Recirculation: Time/Temp.
- ___ Recirculation: Demand
- ___ HWR + Recirculation: Demand
- ___ PI + Recirculation: Demand

Energy Use Calculation

1a. Standard Recovery Load _____ (from Table 6-5 or DHW 2a or 2b)
1b. Distribution Credit/Penalty _____ (from Table 6-6)
1c. Solar Energy Credit _____ (from DHW-4)
1d. Adjusted Recovery Load _____ (1a - 1b - 1c)
2a. Basic Energy Use _____ (from Table 6-7)
2b. Wood Stove Boiler Credit _____ (from DHW-4)
2c. **Proposed Energy Use** (2a - 2b) ☐
3. **Standard Energy Use** (from Table 6-5) ☐

4. **For Prescriptive Compliance** (one water heater per dwelling): Line 2c must not exceed Line 3

SINGLE FAMILY W/ MULTIPLE WATER HEATERS DHW-2A

Project Title _____ Date _____

Note: In addition to this form, a DHW-1 Water Heating Worksheet must also be submitted to document water heater type(s).

Single Family Project Data

1. No. of different water heater types: _____

2. Total conditioned floor area: _____ ft^2

	No. of Heaters	Heater Type #	Manufacturer & Model No.
3a.	_____	#1	_____
3b.	_____	#2	_____
3c.	_____	#3	_____

4. _____ Total Number of Water Heaters

5. Standard Recovery Load: _____ from Table 6-5 based on line 2

6. Recovery Load Per Heater: _____ (line 5 ÷ line 4); enter on DHW-1, line 1a for each Heater Type, and complete calculation through line 2c.

7. Proposed Energy Use, Heater #1: _____ (from DHW-1 line 2c, Heater #1) × (line 3a)

8. Proposed Energy Use, Heater #2: _____ (from DHW-1 line 2c, Heater #2) × (line 3b)

9. Proposed Energy Use, Heater #3: _____ (from DHW-1 line 2c, Heater #3) × (line 3c)

10. Total Proposed Energy Use: _____ (line 7 + line 8 + line 9)

11. Standard Energy Use: _____ from Table 6-5 based on line 2

Compliance

12. **Prescriptive Compliance:** Line 10 must be equal to or less than line 11.
See Part 6.1 and Chapter 3 in the *Residential Manual* for details.

WATER HEATING FOR MULTI-FAMILY BUILDINGS DHW-2B

Project Title _____ Date _____

Notes: In addition to this form, a DHW-1 Water Heating Worksheet must also be submitted to document water heating type(s). If the calculation (line 4) is by "Individual Dwelling Unit" and system configuration (line 5) is "Individual Heaters," no additional information need be entered on this sheet.

Multi-Family Project Data

1. Number of dwelling units: _____
2. Total conditioned floor area: _____ ft^2
3. Average floor area: _____ (Line 2/Line 1)
4. Calculation by (check one): ___ Average Dwelling Unit
   ___ Individual Dwelling Unit
5. System configuration (check one): ___ Individual Heaters (one per dwelling unit)
   ___ Shared Heaters (multiple dwelling units per heater)

Analysis by Average Dwelling Unit

One Individual Heater Per Dwelling Unit

	No. of Heaters	Heater Type#	Manufacturer and Model#	Gallons Each	Gallons Total[1]	Energy Factor Each	Energy Factor Total[2]	Thermal Efficiency Each	Thermal Efficiency Total[3]
6a =									
6b =									
6c =									
Total	_____ = 7a				Total _____ = 7b		Total _____ = 7c		Total _____ = 7d
					Ave. = 8a (7b/7a)		Ave. = 8b (7c/7a)		Ave. = 8c (7d/7a)

Individual Heaters

9a. Enter value 8a on DHW-1 Line E.
10a. Enter value 8b on DHW-1 Line D.
11a Enter value 8c on DHW-1 line G.
12a. Check compliance on DHW-1 for average dwelling unit and average water heating.

Shared Heater(s)

9b. Average unit Adjusted Recovery Load: _____ From DHW-1, Line 1d

10b. Total Adjusted Recovery Load: _____ (Line 1) × (Line 9b)

11b. Total Basic Energy Use: _____ From Table 6-7, or DHW-3

12b. Average Unit Basic Energy Use: _____ (Line 11b) ÷ (Line 1): enter on Line 2a, DHW-1

13b. Check average unit compliance on DHW-1.

Compliance

14. **Prescriptive Compliance** (for individual or shared heaters):
DHW-1 Line 2c must be equal to or less than DHW-1 Line 3.
See Part 6.1 and Chapter 3 in the *Residential Manual* for details.

---

[1] Total Gallons = (No. of Heaters) x (Gallons for each heater of this Heater Number)
[2] Total Energy Factor = (No. of Heaters) x (Energy Factor for each heater of this Heater Number)
[3] Total Thermal Efficiency = (No. of Heaters) x (Thermal Efficiency for each heater of this Heater Number)

INDIRECT & LARGE STORAGE GAS WATER HEATERS DHW-3

Project Title _____ Date _____

Note: This sheet must also be submitted with a DHW-1 water heating worksheet, as well as a DHW-2B form with large storage gas heaters in multi-family buildings.

Indirect Gas Water Heaters

1. Storage tank Manufacturer/Model No. _____

2. Boiler and Instantaneous Heater Manufacturer/Model No. _____

3. Storage tank insulation R-value: Tank _____ External _____ Total _____

4. Storage tank volume (gallons) _____

5. Boiler AFUE or Instantaneous Water Heater Thermal (Recovery) Efficiency EFF _____

6. Adjusted Recovery Load (MBtu/yr, from Line 1d, DHW-1) ARL _____

7. Jacket loss (MBtu/yr, from Table 6-7E) JL _____

8. Pilot Energy (Btuh, from appliance database, or use 800) PE _____

9. Basic Energy Use (BEU) = (ARL + JL) ÷ (0.98 × EFF) + (PE × 0.00876) BEU _____
(Enter BEU on DHW-1, Line 2a or on DHW-2B, Line 11b)

Large Storage Gas Heaters (> 75,000 Btuh input)

1. Water Heater Manufacturer _____

2. Water Heater Model No. _____

3. Storage Tank Volume (gallons) VOL= _____

4. Water Heater Thermal (Recovery) Efficiency (decimal fraction) EFF _____

5. Adjusted Recovery Load (Mbtu/yr, from Line 1d, DHW-1 or Line 10b, DHW-2B) ARL _____

6. Standby Loss % (from appliance database - e.g., “2.7”) SBL% _____

7. Basic Energy Use (BEU) = [ARL/EFF + (5.461 × SBLxVOL)/100] BEU _____
(Enter BEU on DHW-1, Line 2a or on DHW-2B, Line 11b)

AUXILIARY INPUTS (SOLAR AND WOOD BOILERS) (Part 1 of 2) DHW-4

Project Title _____ Date _____

Notes: This sheet must also be submitted with a DHW-1 water heating worksheet. Detailed instructions for calculating Active Solar Credit, Passive Solar Credit or Wood Stove Boiler Credit are contained in Section 6.3 of the *Residential Manual*.

Active Solar Credit

1. Solar Energy Credit =
(Solar Fraction) × (line 1a - line 1b, from DHW-1) × (0.80) = _____

Active Solar Credit Notes: In equation 1, Solar Fraction = "FDHW" from F-Chart. F-Chart parameters are fixed as listed in Table 6-8. Enter Line 1 on DHW-1, Line 1c.

Passive Solar Credit

2. Calculate temperature difference from SRCC data:

T_{SRCC} = $[Q_{SAV}/(100\ gal/day \times 8.25\ Btu/gal\text{-}°F)]$ + $[Q_{CAP}/(V_t \times 8.25\ Btu/gal\text{-}°F)]$ = _____

Where: Q_{SAV} (Btu/day) = from SRCC test results
Q_{CAP} (Btu) = from SRCC test results
V_t (gal) = total volume of solar storage tank

3. Calculate energy losses during SRCC test:

$Q_{LOSS,SRCC} = T_{SRCC} \times 16\ hr/day \times L\ Btu/hr\text{-}°F$ = _____

Where: 16 = number of hours system is losing heat
L (Heat Loss Coefficient, Btu/hr-°F from SRCC test results)

4. Calculate energy collected during the SRCC test:

$Q_{TOTAL,SRCC} = Q_{SAV} + Q_{LOSS,SRCC}$ = _____

5. Adjust energy collected to climate zone insolation values (see Table 6-9)

$Q_{TOTAL,LOCAL} = 1204 + [(Q_{TOTAL,SRCC} - 1204)/1500] \times CZ\ insolation$ = _____

6. Determine $T_{TANK,LOCAL}$, average tank temperature delivered to the site:

$T_{TANK,LOCAL} = (A_1 + A_2 + Q_{TOTAL,LOCAL}) / (A_3 + A_4)$ = _____

Where: A_1 = (50 gal/day) x (8.25 Btu/gal-°F) x (CZ Water Main Temp)
A_2 = 16 hrs/day x L x (CZ Ambient Air Temp)
A_3 = (50 gal/day) x (8.25 Btu/gal-°F)
A_4 = 16 hrs/day x L
CZ Water Main Temp and CZ Ambient Air Temp from Table 6-10

7. Determine energy losses at the site:

$Q_{LOSS,\ LOCAL} = L \times 16\ hrs \times (T_{TANK,\ LOCAL} - CZ\ Ambient\ Air\ Temp)$ = _____

Project Title _____ Date _____

Notes: This sheet must also be submitted with a DHW-1 water heating worksheet. Detailed instructions for calculating Active Solar Credit, Passive Solar Credit or Wood Stove Boiler Credit are contained in Section 6.3 of the *Residential Manual*.

Passive Solar Credit (cont.)

8. Determine energy used by electric resistance freeze protection devices:

   ERP = (Freeze days/yr + 4) x (Collector Area) x
   (0.5 kBtu /ft^2 -freeze day) = _____

   This is calculated only if the system uses electric resistance freeze protection.

9. Calculate system total annual energy contribution (mmBtu/yr); Enter on DHW-1, Line 1c:

   $\{(Q_{TOTAL, LOCAL} - Q_{LOSS, LOCAL}) \times 0.365 - ERP\} \times 0.001 \times$
   (No. of Dwelling Units) = _____

The credit calculated cannot exceed the larger of DHW-1, Line 1a - Line 1b or 3 mmBtu/yr.

Wood Stove Boiler Credit

10. Wood Stove Boiler Credit:
    (Basic Energy Use) × (Credit Factor) = _____
    DHW-1, Line 2a From Table 6-12

Table 1: Energy Used by Freeze Protection Devices

Climate Zone	Freeze Degree Hours[1]	Climate Zone	Freeze Degree Hours[1]
1	44	9	1
2	624	10	57
3	3	11	417
4	157	12	324
5	74	13	195
6	0	14	2813
7	0	15	28
8	1	16	8152-26153[2]

1. Freeze Degree Hours is defined as the annual sum-mation of hours that dry bulb temperature is less than or equal to 34° F from midnight to 10 am and from 6 pm to midnight.
2. The lower limit is for Mt. Shasta (3535' elevation) and the upper limit is for Tahoe City (6,230' elevation).

NOTE: Data in this table is used in item 8 of DWH-4 (Part 2 of 2).

Project Title _____ Date _____

Storage Gas

1.	Recovery Efficiency/AFUE	_____	unitless	From manufacturer's literature or appliance database
2.	Average Hourly Pipe Heat Loss	_____	kBtu/hr	From Pipe Heat Loss Worksheet below, line 8
3.	Rated Input	_____	kBtu/hr	From manufacturer's literature or appliance database
4.	Effective AFUE	_____	unitless	Line 1 - (Line 2 ÷ Line 3)

Storage Electric

1.	Average Hourly Pipe Heat Loss	_____	kBtu/hr	From Pipe Heat Loss Worksheet below, line 8
2.	Rated Input	_____	kW	From manufacturer's literature or appliance database
3.	Pump Watts	_____	watt	From manufacturers literature
4.	Term A	_____	unitless	1 - [Line 1 ÷ (3.413 × Line 2)]
5.	Term B	_____	unitless	1 + [Line 3 ÷ (1000 × Line2)]
6.	Effective HSPF (no fan)	_____	Btu/watt	3.413 × (Line 4 ÷ Line 5)
7.	Effective HSPF (with fan)	_____	Btu/watt	1.017 ÷ [(1 ÷ Line 6) + 0.005]

Heat Pump

1.	Energy Factor	_____	unitless	From manufacturer's literature or appliance database
2.	Average Hourly Pipe Heat Loss	_____	kBtu/hr	From Pipe Heat Loss Worksheet below, line 8
3.	Rated Input	_____	kW	From manufacturer's literature or appliance database
4.	Recovery Efficiency	_____	unitless	1 ÷ [(1 ÷ Line 1) - 0.1175]
5.	Climate Zone Adjustment	_____	unitless	From table below
6.	Effective HSPF (no fan)	_____	Btu/watt	3.413 × [(Line 4 ÷ Line 5) - Line 2 ÷ (3.413 × Line 3)]
7.	Effective HSPF (with fan)	_____	Btu/watt	1.017 ÷ [(1 ÷ Line 6) + 0.005]

Climate Zone Adjustment

Climate Zone	Adjustment
1, 14	1.04
2, 3	0.99
4, 5, 12	1.07
6-11, 13, 15	0.92
16	1.50

Pipe Heat Loss Rate Table

Pipe Nominal Diameter (inches)	Insulation Thickness (inches) 0.5	0.75	1.0
0.50	71.6	60.9	54.2
0.75	91.1	75.8	66.6
1.00	109.9	90.1	78.8
1.50	146.7	117.5	100.3
2.00	182.9	144.3	121.7

Pipe Heat Loss Worksheet

(Complete this section when more than 10 feet of pipe is in unconditioned space.)

1. Description of Pipe Size and Insulation Condition	2. Pipe Heat Loss Rate (kBtu/yr•ft)[1]		3. Pipe Length (ft)		4. Total Pipe Heat Loss	Average Hourly Pipe Heat Loss (kBtu/hr)
_____	_____	×	_____	=	_____	
_____	_____	×	_____	=	_____	
_____	_____	×	_____	=	_____	
_____	_____	×	_____	=	_____	
_____	_____	×	_____	=	_____	

8. Average Hourly Pipe Loss = (line 8b/8760) = _____

1. From Pipe Heat Loss Rate Table.

PROPOSED CONSTRUCTION ASSEMBLY: RESIDENTIAL FORM 3R

Project Title _____ Date _____

Project Address _____

Documentation Author _____ Telephone _____

Assembly Name _____

Building Permit # _____

Plan Check / Date _____

Field Check / Date _____

Enforcement Agency Use Only

Sketch of Proposed Construction Assembly

Assembly Type: (check one)
____ Floor
____ Wall
____ Ceiling/Roof

Framing Material: _____

Framing Size: _____ × _____

Framing Spacing: _____ inches on center (’’ o.c.)

Framing Percentage (Fr.%)**:** (check one)

Wall: ____ 15% (16” o.c.)
____ 12% (24” o.c.)
____ 9% (48” o.c.)

Floor/Ceiling: ____ 10% (16” o.c.)
____ 7% (24” o.c.)
____ 4% (48” o.c.)

Wall Weight / sf: _____ (Packages only)

List of Construction Components	**R-Value**	
	Cavity (R_c)	**Frame (R_f)**
Outside Surface Air Film		
1.		
2.		
3.		
4.		
5.		
6.		
7.		
8.		
Inside Surface Air Film		
Total Unadjusted R-Values:		
	R_c	**R_f**

Framing Adjustment Calculation:

[(_____) × (_____)] + [(_____) × (_____)] = _____

$1 \div R_c$ | $1 - (Fr.\% \div 100)$ | $1 \div R_f$ | $Fr.\% \div 100$ | **Total U-Value**

_____ = _____

$1 \div$ Total U-Value | **Total R-Value**

Items 1 through 4 must be completed for glazing/shading combinations by using the Default Table for Fenestration Products (Table S-1) ; documented manufacturer's data for labeled fenestration products, or Solar Heat Gain Coefficients Used for Exterior Shading Attachments (Table S-2) for the specific conditions indicated (#1a or #1b or #3). For instructions on filling out the worksheet, see *Shading* in the *RM Glossary, Appendix G*.

General Information

1a. For Fenestration Products w/NFRC testing and labels: $SHGC_{fen}$ = _____

OR

1b. For Fenestration Products without NFRC testing and labels (Table S-1): $SHGC_{fen}$ = _____

1c. Frame Type	1d. Product Type	1e. Glazing Type	1f. Single/Double Pane
_____	_____	_____	_____
metal, non-metal, metal w/thermal break	operable/fixed	(visibly) tinted uncoated (not visibly tinted)	single pane/double pane

2. Skylight (Y/N)_____

("Skytlights" must be mounted on a surface of pitch less than or equal to 1in 12 for prescriptive compliance)

Combined Exterior Shade with Fenestration

Exterior Shade Type: _____

3. $SHGC_{Exterior\ Shade}$: _____

(If no exterior shade, assume standard bug screens, $SHGC_{Exterior\ Shade}$ = 0.76 for ordinary windows. This requirement does not apply to skylights where $SHGC_{Exterior\ Shade}$ is assumed to be 1.00. If another exterior shade is substituted for bug screens, use one of the values from Table S-2

4. $[(\underset{SHGC_{max}}{\_\_\_\_} \times 0.2875) + 0.75] \times \underset{SHGC_{min}}{\_\_\_\_} = \underset{\text{SHGC Shade Open}}{\boxed{}}$

Where:
$SHGC_{max}$ = Larger of (#1a or #1b) or #3
$SHGC_{min}$ = Smaller of (#1a or #1b) or #3

Note: Calculated Shading Coefficient values for SHGC shade open may be used directly for prescriptive packages. Target Value for SHGC shade open is 0.39 for Package Requirement of $SHGC_{fen}$ = 0.40.

TABLES

Table S-1: DEFAULT FENESTRATION SOLAR HEAT GAIN COEFFICIENT

Frame Type	Product	Glazing	Total Window SHGC Single Pane	Total Window SHGC Double Pane
Metal	Operable	Uncoated	0.80	0.70
Metal	Fixed	Uncoated	0.83	0.73
Metal	Operable	Tinted	0.67	0.59
Metal	Fixed	Tinted	0.68	0.60
Metal, Thermal Break	Operable	Uncoated	0.72	0.63
Metal, Thermal Break	Fixed	Uncoated	0.78	0.69
Metal, Thermal Break	Operable	Tinted	0.60	0.53
Metal, Thermal Break	Fixed	Tinted	0.65	0.57
Non-Metal	Operable	Uncoated	0.74	0.65
Non-Metal	Fixed	Uncoated	0.76	0.67
Non-Metal	Operable	Tinted	0.60	0.53
Non-Metal	Fixed	Tinted	0.63	0.55

SHGC = Solar Heat Gain Coefficient

TABLES (Continued)

Table S-2: Solar Heat Gain Coefficients Used for Exterior Shading Attachments for Form S and Computer Performance Methods [1,2]

Exterior Shading Device[3]	w/Single Pane Clear Glass & Metal Framing[4]
1) Standard Bug Screens	0.76
2) Exterior Sunscreens with weave 53*16/inch	0.30
3) Louvered Sunscreens w/louvers as wide as openings	0.27
4) Low Sun Angle (LSA) Louvered Sunscreens	0.13
5) Roll-down Awning	0.13
6) Roll Down Blinds or Slats	0.13
7) None (for skylights only)	1.00

1. These values may be used on line 9 of the Solar Heat Gain Coefficient (SHGC) Worksheet (form S) to calculate exterior shading with other glazing types and combined interior and exterior shading with glazing.
2. Exterior operable awnings (canvas, plastic or metal), except those that roll vertically down and cover the entire window, should be treated as overhangs for purposes of compliance with the Standards.
3. Standard bug screens must be assumed for all fenestration unless replaced by other exterior shading attachments. The solar heat gain coefficient listed for bug screens is an area-weighted value that assumes that the screens are only on operable windows. The solar heat gain coefficient of any other exterior shade screens applied only to some window areas must be area-weighted with the solar heat gain coefficient of standard bug screens for all other glazing (see Weighted Averaging in the Glossary). Different shading conditions may also be modeled explicitly in the computer performance method.

Project Title		Date
Project Address		Builder Name
Builder Contact	Telephone	Plan Number
HERS Rater	Telephone	Sample Group Number
HERS Provider	Telephone	Sample House Number

HERS RATER COMPLIANCE STATEMENT

The house was: ☐ Tested ☐ Approved as part of sample testing, but was not tested

As the HERS rater providing diagnostic testing and field verification, I certify that:

☐ CF-1R & CF-6R Compliance Documentation provided by Builder.

☐ The following requirements for compliance credit were met.

MINIMUM REQUIREMENTS FOR DUCT EFFICIENCY COMPLIANCE CREDIT

☐ Distribution system is fully ducted (i.e., does not use building cavities as plenums or platform returns in lieu of ducts)

☐ Where cloth backed, rubber adhesive duct tape is installed, mastic and drawbands are used in combination with cloth backed, rubber adhesive duct tape to seal leaks at duct connections.

Duct Diagnostic Testing Results

	Required for Compliance	Measured by Installer and documented on CF-6R	Measured by Rater
Duct Pressurization Test Results (CFM @ 25 Pa) as required from CF-1R			
Duct System Fan Flow Results (CFM) as required from CF-6R			

Field Verification Results

1. ☐ Yes ☐ No –ACCA Manual D Design was used for compliance (CF-1R) If yes is checked, fill out line 1a through 1c and line 2, otherwise go to line 3
   - 1a. ☐ Yes ☐ No –Verify ACCA Manual D Design Calculations match plans and
   - 1b. ☐ Yes ☐ No –Duct Layout on the plans – duct sizes, lengths, and register air flows and
   - 1c. ☐ Yes ☐ No –Actual distribution is consistent with the design (including duct runs no longer than design, ducts not constricted or compressed, duct sizes and insulation values match design), and either
     - 1c1 ____Tested system fan flow (see above results) is not less than design[1], or
     - 1c2 ____Thermostatic expansion valve and removable access panel on the cooling coil is installed
2. ☐ Yes ☐ No –ACCA Manual D Design requirements have been met (rater has verified Yes for item 1 and has checked that either 1c1 or 1c2 is true.

[1] Measurement system is required to have an accuracy of ±5% of reading or ±5 CFM, whichever is greater. Measurement comparisons must be within this tolerance.

Project Title _____ Plan Number _____ Date _____

Sample Group Number _____ Sample House Number _____

3. ☐ Yes ☐ No –Were Ducts Located in Conditioned Space used for compliance (CF-1R)? If Yes, verify and check either 3a or 3b to identify which alternative was used for compliance, otherwise go to line 5.
   3a ____Less than 12 feet of duct and air handler plenum length is installed in unconditioned space, or
   3b ____100% of duct (including air handler plenum) is installed in conditioned space. (Combustion equipment must be sealed from conditioned space).
4. ☐ Yes ☐ No –Requirements for ducts inside of conditioned space have been met (Rater has verified Yes for items 3 and has checked that either 3a or 3b is true.
5. ☐ Yes ☐ No –Was reduced Duct Surface Area in Unconditioned Locations used for compliance (CF-1R)? If Yes, document the areas used for compliance in the second column and the actual areas installed in the last column of the following table.

Measured duct exterior surface area in the following unconditioned duct locations (square feet):

	Maximum allowed for Compliance (from CF-1R)	Actual (Measured outside surface area calculated from measured outside perimeter and lengths)
Attics		
Crawlspaces		
Basements		
Other (e.g., garages, etc.)		

6. ☐ Yes ☐ No –Requirements for reduced duct surface area have been met (Rater has verified Yes for line 5, Yes for line 2 and has checked that the values in the last column of the above table are no greater than the values in the second column.)

MINIMUM REQUIREMENTS FOR INFILTRATION REDUCTION COMPLIANCE CREDIT

the following requirements for compliance credit were met

1. ☐ Yes ☐ No –This building obtained compliance credit for envelope infiltration reduction. If Yes, fill in the values for the following table, otherwise leave the remainder of this infiltration form blank.

Diagnostic Testing Results

2. ☐ Yes ☐ No –CF-6R shows results of builder testing. If Yes, fill in the test values in the table below. (No indicates failure of builder to provide information required to determine compliance.)

	Needed for Compliance (from CF-1R)	Builder Compliance Results (from CF-6R)	Blowerdoor Test Results Measured by Rater
Building Envelope Leakage (CFM @ 50 Pa)			
Infiltration level (CFM @ 50 Pa) equivalent to an SLA of 3.0 from CF-1R			
Minimum Building Infiltration (CFM @ 50 Pa) equivalent to an SLA of 1.5 from CF-1R			

Project Title _____ Plan Number _____ Date _____

Sample Group Number _____ Sample House Number _____

Field Verification Results

2a. ☐ Yes ☐ No –Is measured infiltration less than the infiltration level used to determine compliance? (No indicates failure to meet infiltration level used for determiningcompliance)

2b. ☐ Yes ☐ No –Is design infiltration less than the SLA 3.0 equivalent? (Yes requires mechanical ventilation)

2b1 ☐ Yes ☐ No –Is mechanical ventilation installed? (No indicates failure to achieve compliance if 2b is Yes)

2c. ☐ Yes ☐ No –Is measured infiltration less than minimum (1.5 SLA)?

2c1 ☐ Yes ☐ No –Is mechanical ventilation installed to assure house pressure does not go below minus 5 Pascal relative to outside ambient with all exhaust fans operating (No indicates failure to achieve compliance if 2c is Yes)?

3. ☐ Yes ☐ No –This certifies that the building infiltration was verified (rater has verified Yes for items 1 and 2a and has responded to 2b, 2b1, 2c and 2c1). By checking Yes, rater is certifying that house passes infiltration reduction requirements.

When compliance credit is claimed for building infiltration reduction below default assumptions, builder employees or subcontractors shall certify that they have verified that the building infiltration level matches that used for compliance on the CF-1R and shall document the infiltration levels required for compliance and the tested infiltration values on the CF-6R. The rater shall indicate failure to achieve compliance with infiltration reduction requirements if the builder has not provided this documentation.

Mechanical Ventilation (fill in table if 2b1 or 2c1 are Yes)

	Needed for Compliance (from CF-1R)	Installed by Builder (From CF-6R)	Actual as determined by Rater
Continuous Mechanical Ventilation (CFM)[2]			
Continuous Mechanical Supply Ventilation (CFM) Required to maintain -5 Pa if building envelope leakage is less than Minimum (Put NA in this row if 2c is No)			
Total Power Input Power of Continuous Mechanical Ventilation (Watts)[3]			

4. ☐ Yes ☐ No –Is Actual mechanical ventilation equal to, or greater than, needed for Compliance? (No indicates failure to comply)

5. ☐ Yes ☐ No –Is Actual mechanical supply ventilation equal to, or greater than, needed for Compliance? (No indicates failure to comply. Check Yes if NA is used on this row in the above table.

6. ☐ Yes ☐ No –Is Actual Total Input Power less than or equal to that needed for compliance? (No indicates failure to comply.

HERS Rater

Name: _____ Firm: _____

Street Address: _____ City/State/Zip: _____

Telephone: _____ HERS Provider: _____

_____ Telephone: _____

Signature Date

[2] When mechanical ventilation is required, CFM less than 0.047 CFM per square foot of conditioned floor area indicates failure to achieve compliance.

[3] As determined from label on fan or manufacturers literature.

Project Title | Plan Number | Date

Sample Group Number | Sample House Number

Copies to: Builder
HERS Provider

The following is an explanation of many of the input values required on the Diagnostic portion of this form:

TYPE OF CREDIT

Refer to *Residential Manual* Chapters 4 and 5 for more details:

All:	If the HERS Rater determines that any features that are used for determining compliance on the CF-1R are designated *HERS Required Verification* they must appear on the CF-6R and also must be documented on this CF-4R as meeting the claims made in the CF-1R. If this does not occur, the HERS Rater shall not certify that the building complies and shall not sign the CF-4R. When testing for individual buildings, any failures should be reported back to the builder for correction. When testing as part of a sample of buildings, the failure to comply must be documented as described in Chapter 4.
Reduced Duct Surface Area:	Calculated as the outside area of the duct. Areas must be measured and verified by a HERS rater
Improved Duct Location:	Supply duct located in other than attic, as verified by location of registers (Requires HERS rater verification when used with reduced duct surface area or for ducts inside conditioned space)
Catastrophic Leakage:	Pressure pan test readings must be less than 1.5 Pascal at a house pressure of 25 Pascal.
TXV:	Access cover required to facilitate verification
Infiltration Reduction:	Infiltration is measured without mechanical ventilation operating. Mechanical ventilation is required for very tight house construction when credits for infiltration reduction using diagnostic testing are being used for achieving compliance. These very tight houses are defined as those with SLA of less than 1.5. The compliance documentation (CF-1R) will contain the measured CFM target value from a blower door test at 50 Pascal pressure difference that represents this SLA of 1.5. Mechanical ventilation is also required if the builder chooses to design the building to use mechanical ventilation and claims a credit for infiltration below an SLA of 3.0. The compliance documentation (CF-1R) will contain the measured CFM target value that represents this 3.0 SLA. If the builder claims credit in a design for infiltration reduction that is at an SLA of 3.0 or higher, and the actual measured SLA is 1.5 or greater, then mechanical ventilation is not required. If the SLA in this case were below 1.5, then mitigation (such as mechanical ventilation) would be required.

INSTALLATION CERTIFICATE (Page 1 of 7) CF-6R

Site Address **Permit Number**

An installation certificate is required to be posted at the building site or made available for all appropriate inspections. (The information provided on this form is required; however, use of this form to provide the information is optional.) After completion of final inspection, a copy must be provided to the building department (upon request) and the building owner at occupancy, per Section 10-103(b).

HVAC SYSTEMS:

Heating Equipment

Equip. Type (pkg. heat pump)	CEC Certified Mfr Name and Model Number	# of Identical Systems	Efficiency (AFUE, etc.)[1] [≥CF-1R value]	Duct Location (attic, etc.)	Duct or Piping R-value	Heating Load (Btu/hr)	Heating Capacity (Btu/hr)

Cooling Equipment

Equip. Type (pkg. heat pump)	CEC Certified Compressor Unit Mfr Name and Model Number	# of Identical Systems	Efficiency (SEER, etc.)[1] [≥CF-1R value]	Duct Location (attic, etc.)	Duct R-value	Cooling Load (Btu/hr)	Cooling Capacity (Btu/hr)

1. ≥ reads *greater than or equal to.*

I, the undersigned, verify that equipment listed above is: 1) is the actual equipment installed, 2) equivalent to or more efficient than that specified in the certificate of compliance (Form CF-1R) submitted for compliance with the *Energy Efficiency Standards* for residential buildings, and 3) equipment that meets or exceeds the appropriate requirements for manufactured devices (from the *Appliance Efficiency Regulations* or Part 6), where applicable.

Signature, Date

Installing Subcontractor (Co. Name)
OR General Contractor (Co. Name) OR Owner

WATER HEATING SYSTEMS:

Heater Type	CEC Certified Mfr Name & Model Number	Distribution Type (Std, Point-of-Use)	If Recir-culation, Control Type	# of Identical Systems	Rated[2] Input (kW or Btu/hr)	Tank Volume (gallons)	Effi-ciency[2] (EF, RE)	Standby[2] Loss (%)	External Insulation R-value[3]

2 For **small gas storage** (rated input of less than or equal to 75,000 Btu/hr), **electric resistance** and **heat pump water heaters**, list Energy Factor.
For **large gas storage water heaters** (rated input of greater than 75,000 Btu/hr), list Recovery Efficiency, Standby Loss and Rated Input.
For **instantaneous gas water heaters**, list Recovery Efficiency and Rated Input.

3. R-12 external insulation is mandatory for storage water heaters with an energy factor of less than 0.58.

Faucets & Shower Heads:

All faucets and showerheads installed are certified to the Commission, pursuant to Title 24, Part 6, Section 111.

I, the undersigned, verify that equipment listed above my signature is: 1) the actual equipment installed; 2) equivalent to or more efficient than that specified in the certificate of compliance (Form CF-1R) submitted for compliance with the *Energy Efficiency Standards* for residential buildings; and 3) equipment that meets or exceeds the appropriate requirements for manufactured devices (from the *Appliance Efficiency Regulations* or Part 6), where applicable.

Signature, Date

Installing Subcontractor (Co. Name) OR
General Contractor (Co. Name) OR Owner

COPY TO: Building Department
HERS Provider (if applicable)
Building Owner at Occupancy

Site Address **Permit Number**

FENESTRATION/GLAZING:

Manufacturer/Brand Name (GROUP LIKE PRODUCTS)	Product U-Value[1] (≤ CF-1R value)[2]	Product SHGC[1] (≤ CF-1R value)[2]	# of Panes	Total Quantity of Like Product (*Optional*)	Square Feet	Interior or Exterior Shading Device or Overhang	Comments/Location/ Special Features
1.							
2.							
3.							
4.							
5.							
6.							
7.							
8.							
9.							
10.							
11.							
12.							
13.							
14.							
15.							

[1] Manufactured fenestration products use the values from the product label. Field fabricated fenestration products use the default values from Section 116 of the Energy Efficiency Standards.

[2] Installed U-value must be less than or equal to values from CF-1R. Installed SHGC must be less than or equal to values from CF-1R, or a shading device (interior, exterior or overhang) is installed as specified on the CF-1R. Alternatively, installed weighted average U-values for the total fenestration area are less than or equal to values from CF-1R.

I, the undersigned, verify that the fenestration/glazing listed above my signature: 1) is the actual fenestration product installed; 2) is equivalent to or has a lower U-Value and lower SHGC than that specified in the certificate of compliance (Form CF-1R) submitted for compliance with the *Energy Efficiency Standards* for residential buildings; and 3) the product meets or exceeds the appropriate requirements for manufactured devices (from Part 6), where applicable.

Item #s (if applicable)	Signature, Date	Installing Subcontractor (Co. Name) OR General Contractor (Co. Name) OR Owner OR Window Distributor
Item #s (if applicable)	Signature, Date	Installing Subcontractor (Co. Name) OR General Contractor (Co. Name) OR Owner OR Window Distributor
Item #s (if applicable)	Signature, Date	Installing Subcontractor (Co. Name) OR General Contractor (Co. Name) OR Owner OR Window Distributor

COPY TO: Building Department
HERS Provider (if applicable)
Building Owner at Occupancy

Site Address **Permit Number**

DUCT DIAGNOSTICS

This building obtained compliance credit for: ☐ Duct sealing ☐ Duct Area Reduction ☐ ACCA Manual D design and installation

CREDIT FOR REDUCED DUCT SURFACE AREA OR LOCATION

Duct Location*	Exterior Surface Area (Cf-1R)	Measured Exterior Surface Area
☐ Attic		
☐ Crawlspace		
☐ Basement		
☐ Other _____		

*Ignore ducts in conditioned space. Only a check is required for location credit.

ACCA Design

☐ Duct Design on Plans

☐ Installed duct diameters match plans

☐ TXV installed

☐ Access to TXV valve (if installed)

☐ No TXV, Fan air flow (CFM) _____

Duct Sealing

☐ Duct Leakage Measured

☐ Measured leakage (CFM) _____

HVAC Fan air flow (CFM) _____ (measured or calculated as

☐ CFM = 0.7 x A_{floor} for CZ 8 through 15

☐ CFM = 0.5 x A_{floor} for CZ 1 through 7 & 16

or, if the equipment size is known, the larger of 1 or 2.

1. ☐ CFM = 400 x *Cooling Capacity in T*ons or
2. ☐ CFM = 21.7 x *Heating Capacity in Thousands of Btu per hour*)

Leakage divided by HVAC Fan air flow _____ (must be ≤ 0.06)

For AEROSOL TYPE SEALANTS ONLY - The following diagnostic testing was completed:

☐ Duct Fan Pressurization at rough-in measured leakage CFM) _____CHECK AFTER FINISHING WALL::

☐ Pressure pan test ☐ House pressurization test ☐ Visual Inspection of Duct Connections

Provide Follow-up Test Results or Inspection Results on a Separate Page

☐ This certifies that the duct surface area and duct locations were verified.

When compliance credit is claimed for duct surface area reductions and duct location improvements beyond those covered by default assumptions, builder employees or subcontractors shall certify that they have verified that the duct surface area and locations match those on the plans and shall indicate the duct surface area in each duct location on the CF-6R.

☐ This is to certify that the above diagnostic test results and the work I performed associated with the test(s) is in conformance with the requirements for compliance credit. [The builder shall provide the HERS provider a copy of the CF-6R signed by the builder employees or sub-contractors certifying that diagnostic testing and installation meet the requirements for compliance credit.]

Tests Performed — Signature, Date — Installing Subcontractor (Co. Name) OR General Contractor (Co. Name)

COPY TO: Building Department
HERS Provider (if applicable)
Building Owner at Occupancy

Site Address **Permit Number**

BUILDING ENVELOPE LEAKAGE DIAGNOSTICS

This building obtained compliance credit for: ☐ Envelope sealing using diagnostic testing (CF-1R)

Diagnostic Testing Results

	Needed for Compliance (from CF-1R)	Measured Blowerdoor Test Results
Building Envelope Leakage (CFM @ 50 Pa)		
Leakage level equivalent to an SLA of 3.0 from CF-1R		
Minimum Building Leakage equivalent to an SLA of 1.5 from CF-1R (CFM @ 50 Pa)		

☐ Yes ☐ No Is design leakage less than the SLA 3.0 equivalent (from CF-1R)?

☐ Yes ☐ No Is mechanical ventilation installed? (Required if design is less than 3.0 SLA)

☐ Yes ☐ No Is measured leakage (without fans operating) less than minimum in the above Table (1.5 SLA from CF-1R)?

☐ Yes ☐ No Is mechanical supply ventilation installed to assure house pressure does not go below minus 5 Pascal relative to outside ambient with all exhaust fans operating?

Mechanical Ventilation – Fill in Table if mechanical ventilation is installed

	Used for Compliance (from CF-1R)	Measured Actual
Continuous Mechanical Ventilation (CFM)[1]		
Continuous Mechanical Supply Ventilation (CFM) Required to maintain -5 Pa if building envelope leakage is less than minimum (see above)		
Total Power Consumption of Continuous Mechanical Ventilation (Watts)[2]		

☐ This certifies that the building envelope leakage was verified.
When compliance credit is claimed for building leakage reduction below default assumptions, builder employees or subcontractors shall certify that they have verified that the building leakage level matches that used for compliance on the CF-1R and shall document the leakage levels required for compliance and the tested infiltration values on the CF-6R.

☐ This is to certify that the above diagnostic test results and the work I performed associated with the test(s) is in conformance with the requirements for compliance credit. [The builder shall provide the HERS provider a copy of the CF-6R signed by the builder employees or sub-contractors certifying that diagnostic testing and installation meet the requirements for compliance credit.]

Test Performed | Signature | Date | Testing Subcontractor (Co. Name) OR General Contractor (Co. Name)

COPY TO: Building Department
HERS Provider (if applicable)

[1] When mechanical ventilation is required, CFM less than 0.047 CFM per square foot of conditioned floor area indicates failure to achieve compliance.

[2] As determined from label on fan or manufacturers literature.

Site Address **Permit Number**

The following is an explanation of many of the input values required on this form:

HVAC SYSTEMS

Heating Equipment Type must be one of the following:

Furnace:	Gas (including Liquefied Petroleum Gases) or oil-fired central furnace & space heater
Boiler:	Gas or oil-fired boiler
PckgHeatPump:	Packaged central heat pump
SplitHeatPump:	Split central heat pump
RoomHeatPump:	Room heat pump
LgPkgHeatPump:	Large packaged heat pump (≥ 65,000 Btu/hr output)
Electric:	Electric resistance heating (fixed HSPF = 3.413); radiant electric resistance (fixed HSPF = 3.55)
CombinedHydro:	Reference water heater under water heating systems below

CEC Certified Manufacturer Name & Model Number from applicable Commission approved appliance directory.
# of Identical Systems is for those systems with the same efficiency, duct location, duct R-value and capacity.
Efficiency from applicable Commission certified appliance directory.
Duct (or Piping) Location is attic, crawl space, CVC crawl space, conditioned space, unconditioned space or none.
Duct (or Piping) R-Value from Directory of Certified Insulation Materials and/or manufacturer's data.
Heating/Cooling Load refer to Commission approved load calculation procedure.
Heating/Cooling Capacity from the applicable Commission certified appliance directory. Note: location elevations over 2,000 ft above sea level require a derating of output capacity (refer to manufacturer's literature).

Cooling Equipment Type must be one of the following:

SplitAirCond:	Split system air conditioner
PckgAirCond:	Packaged air conditioner
Split Heat Pump:	Split system heat pump
PckgHeatPump:	Packaged heat pump
RoomHeatPump:	Room heat pump
LgPkgHeatPump:	Large packaged heat pump (≥ 65,000 Btu/hr output). Substitute EER for SEER when SEER is not available
RoomAirCond:	Room air conditioner. Minimum SEER varies*
LgPkgAirCond:	Large packaged air conditioner (≥ 65,000 Btu/hr output). Substitute EER for SEER when SEER is not available
EvapDirect:	Direct evaporative cooling system. For compliance calculation purposes, fixed values: SEER = 11.0; duct location = attic; duct insulation R-value = 4.2
EvapIndirect:	Indirect evaporative cooling system. For compliance calculation purposes, fixed values: SEER = 13.0; duct location = attic; duct insulation R-value = 4.2

*Refer to Energy Commission publication *Appliance Efficiency Regulations*, P400-92-029

Site Address **Permit Number**

The following is an explanation of many of the input values required on this form:

WATER HEATING SYSTEMS

Distribution Systems Refer to *Residential Manual* for more details:

Standard:	Standard – Supply pressure based system, no pumps
Pipe Insulation:	Pipe Insulation on all 3/4-inch pipes
POU/HWR:	Point of Use/Hot Water Recovery System
Recirc/NoControl:	Recirculation loop with no controls
Recirc/Timer:	Recirculation loop with a timer
Recirc/Temp:	Recirculation loop with temperature control
Recirc/Time+Temp:	Recirculation loop with a timer and temperature control
Recirc/Demand:	Recirculation loop with demand control

Water Heater Type	Information Needed			
	Energy Factor	Recovery Efficiency	Standby Loss	Rated Input
Storage Gas, Oil or Electric	Yes	No	No	No
Heat Pump	Yes	No	No	No
Instantaneous Gas	No	Yes	No	No
Instantaneous Electric	Yes	No	No	No
Large Storage Gas	No	Yes	Yes	Yes
Indirect Gas (Boiler)	No	Yes (AFUE)	No	Yes

FENESTRATION/GLAZING

Fenestration:	Windows, sliding glass doors, French doors, skylights, garden windows, and any door with more than one square foot of glass
Operator Type:	Slider, hinged, fixed
U-Value:	Installed U-value must be less than or equal to value from CF-1R OR Installed weighted average U-value for the total fenestration area is less than or equal to value from CF-1R
SHGC:	Installed SHGC must be less than or equal to value from CF-1R OR Installed weighted SHGC for the total fenestration area is less than or equal to value from CF-1R OR An interior shading device, overhang, or exterior shading device is installed consistent with the CF-1R
Shading Device:	Include when the building complied using an ***interior*** shading device: blinds, opaque roller shades, blinds (do not list draperies), an ***exterior*** shading device: woven sunscreen, louvered sunscreen, low sun angle sunscreen, roll-down awning, roll-down blinds or slats (do not list bug screen), or an overhang (include depth in feet)

Site Address **Permit Number**

The following is an explanation of many of the input values required on the Diagnostic portion of this form (page 3 of 6):

TYPE OF CREDIT

Refer to *Residential Manual* Chapters 4 and 5 for more details:

Reduced Duct Surface Area:	Calculated as the outside area of the duct. Areas must be measured and verified by a HERS rater.
Improved Duct Location:	Supply duct located in other than attic, as verified by location of registers (does not require HERS rater verification).
Catastrophic Leakage:	Pressure pan test readings must be less than 1.5 Pascal at a house pressure of 25 Pascal.
TXV:	Access cover required to facilitate verification.
Infiltration Reduction:	Infiltration is measured without mechanical ventilation operating. Mechanical ventilation is required for very tight house construction when credits for infiltration reduction using diagnostic testing are being used for achieving compliance. These very tight houses are defined as those with SLA of less than 1.5. The compliance documentation (CF-1R) will contain the measured CFM target value from a blower door test at 50 Pascal pressure difference that represents this SLA of 1.5. Mechanical ventilation is also required if the builder chooses to design the building to use mechanical ventilation and claims a credit for infiltration below an SLA of 3.0. The compliance documentation (CF-1R) will contain the measured CFM target value that represents this 3.0 SLA. If the builder claims credit in a design for infiltration reduction that is at an SLA of 3.0 or higher, and the actual measured SLA is 1.5 or greater, then mechanical ventilation is not required. If the SLA in this case were below 1.5, then mitigation (such as mechanical ventilation) would be required.

INSULATION CERTIFICATE IC-1

Number and Street _____ City _____

County _____ Subdivision _____ Lot Number _____

Description of Installation

1. ROOF
   Material _____ Brand Name _____
   Thickness (inches) _____ Thermal Resistance (R-Value) _____

2. CEILING
   Batt or Blanket Type _____ Brand Name _____
   Thickness (inches) _____ Thermal Resistance (R-Value) _____
   Loose Fill Type _____ Brand _____
   Contractor's min installed weight/ft² _____lb Minimum thickness _____inches
   Manufacturer's installed weight per square foot to achieve Thermal Resistance (R-Value) _____

3. EXTERIOR WALL
   Frame Type _____
   A. Cavity Insulation
   Material _____ Brand Name _____
   Thickness (inches) _____ Thermal Resistance (R-Value) _____
   B . Exterior Foam Sheathing
   Material _____ Brand Name _____
   Thickness (inches) _____ Thermal Resistance (R-Value) _____

4. RAISED FLOOR
   Material _____ Brand Name _____
   Thickness (inches) _____ Thermal Resistance (R-Value) _____

5. SLAB FLOOR/PERIMETER
   Material _____ Brand Name _____
   Thickness (inches) _____ Thermal Resistance (R-Value) _____
   Perimeter Insulation Depth (inches) _____

6. FOUNDATION WALL
   Material _____ Brand Name _____
   Thickness (inches) _____ Thermal Resistance (R-Value) _____

Declaration

I hereby certify that the above insulation was installed in the building at the above location in conformance with the current *Energy Efficiency Standards* for residential buildings (Title 24, Part 6, California Code of Regulations) as indicated on the Certificate of Compliance, where applicable.

Item #s	Signature, Date	Installing Subcontractor (Co. Name) OR General Contractor (Co. Name) OR Owner

Appendix B
Materials References

The following pages are reprinted from the *ASHRAE Handbook, 1993 Fundamentals* with the Permission of the American Society of Heating, Refrigerating and Air-Conditioning Engineers, Inc. (ASHRAE), 1791 Tullie Circle NE, Atlanta, GA 30329.

ASHRAE Table 1: Surface Conductances and Resistances

ASHRAE Table 2: Thermal Resistances of Plane Airspaces

ASHRAE Table 3: Emittance Values of Various Surfaces and Effective Emittances of Airspaces

ASHRAE Table 4: Typical Thermal Properties of Common Building and Insulating Materials

ASHRAE Table 5: Effective Thermal Resistance of Ventilated Attics

ASHRAE Table 6: Transmission Coefficients for Wood and Steel Doors

ASHRAE Table 7: Typical Apparent Thermal Conductivity Values for Soils

ASHRAE Table 8: Typical Apparent Thermal Conductivity Values for Rocks

ASHRAE Table 9: Typical Water Vapor Permeance and Permeability Values for Common Building Materials

ASHRAE Table 10: Typical Thermal Conductivity for Industrial Insulations at Various Mean Temperatures

ASHRAE Table 11A: Heat Loss from Bare Steel Pipe to Still Air

ASHRAE Table 11B: Heat Loss from Flat Surfaces to Still Air

ASHRAE Table 12: Heat Loss from Bare Copper Tube to Still Air

ASHRAE Table 13: Recommended Thickness for Pipe and Equipment Insulation

CHAPTER 22

THERMAL AND WATER VAPOR TRANSMISSION DATA

Building Envelopes 22.1
Calculating Overall Thermal Resistances 22.3
Mechanical and Industrial Systems 22.17
Calculating Heat Flow for Buried Pipelines 22.19

THIS chapter presents thermal and water vapor transmission data based on steady-state or equilibrium conditions. Chapter 3 covers heat transfer under transient or changing temperature conditions. Chapter 20 discusses selection of insulation materials and procedures for determining overall thermal resistances by simplified methods.

BUILDING ENVELOPES

Thermal Transmission Data for Building Components

The steady-state thermal resistances (R-values) of building components (walls, floors, windows, roof systems, etc.) can be calculated from the thermal properties of the materials in the component; or the heat flow through the assembled component can be measured directly with laboratory equipment such as the guarded hot box (ASTM *Standard* C 236) or the calibrated hot box (ASTM *Standard* C 976).

Tables 1 through 6 list thermal values, which may be used to calculate thermal resistances of building walls, floors, and ceilings. The values shown in these tables were developed under ideal conditions. In practice, overall thermal performance can be reduced significantly by such factors as improper installation and shrinkage, settling, or compression of the insulation (Tye and Desjarlais 1983, Tye 1985, 1986).

Most values in these tables were obtained by accepted ASTM test methods described in ASTM *Standards* C 177 and C 518 for materials and ASTM *Standards* C 236 and C 976 for building envelope components. Because commercially available materials vary, not all values apply to specific products. (Previous editions of the handbook can be consulted for data on materials no longer commercially available.)

The most accurate method of determining the overall thermal resistance for a combination of building materials assembled as a building envelope component is to test a representative sample by a hot box method. However, all combinations may not be conveniently or economically tested in this manner. For many simple constructions, calculated R-values agree reasonably well with values determined by hot box measurement.

The performance of materials fabricated in the field is especially subject to the quality of workmanship during construction and installation. Good workmanship becomes increasingly important as the insulation requirement becomes greater. Therefore, some engineers include additional insulation or other safety factors based on experience in their design.

Figure 1 shows how convection affects surface conductance of several materials. Other tests on smooth surfaces show that the average value of the convection part of conductance decreases as the length of the surface increases.

Table 1 Surface Conductances and Resistances for Air

Position of Surface	Direction of Heat Flow	Surface Emittance, ϵ: Non-reflective $\epsilon = 0.90$ h_i	R	Reflective $\epsilon = 0.20$ h_i	R	$\epsilon = 0.05$ h_i	R
STILL AIR							
Horizontal	Upward	1.63	0.61	0.91	1.10	0.76	1.32
Sloping—45°	Upward	1.60	0.62	0.88	1.14	0.73	1.37
Vertical	Horizontal	1.46	0.68	0.74	1.35	0.59	1.70
Sloping—45°	Downward	1.32	0.76	0.60	1.67	0.45	2.22
Horizontal	Downward	1.08	0.92	0.37	2.70	0.22	4.55
MOVING AIR (Any position)		h_o	R	h_o	R	h_o	R
15-mph Wind (for winter)	Any	6.00	0.17	—	—	—	—
7.5-mph Wind (for summer)	Any	4.00	0.25	—	—	—	—

Notes:
1. Surface conductance h_i and h_o measured in Btu/h · ft² · °F; resistance R in °F · ft² · h/Btu.
2. No surface has both an air space resistance value and a surface resistance value.
3. For ventilated attics or spaces above ceilings under summer conditions (heat flow down), see Table 5.
4. Conductances are for surfaces of the stated emittance facing virtual blackbody surroundings at the same temperature as the ambient air. Values are based on a surface-air temperature difference of 10°F and for surface temperatures of 70°F.
5. See Chapter 3 for more detailed information, especially Tables 5 and 6, and see Figure 1 for additional data.
6. Condensate can have a significant impact on surface emittance (see Table 3).

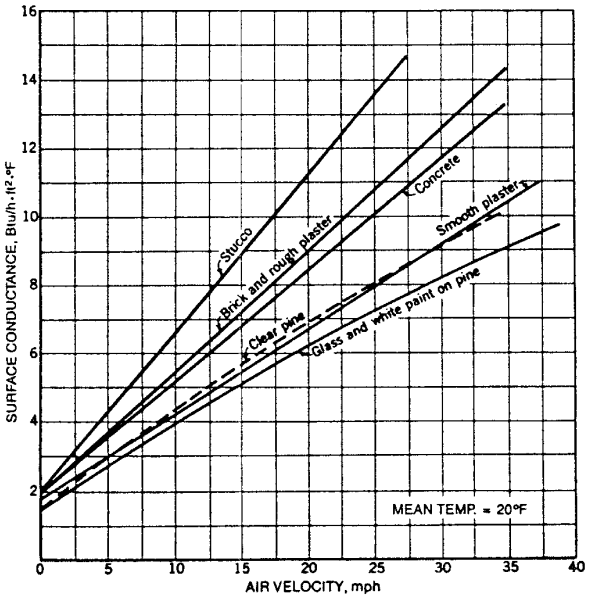

Fig. 1 Surface Conductance for Different 12-Inch-Square Surfaces as Affected by Air Movement

The preparation of this chapter is assigned to TC 4.4, Thermal Insulation and Moisture Retarders.

Table 2 Thermal Resistances of Plane Air Spaces[a,b,c], °F · ft² · h/Btu

Position of Air Space	Direction of Heat Flow	Air Space: Mean Temp.[d], °F	Air Space: Temp. Diff.[d], °F	0.5-in. Air Space[c]: Effective Emittance ϵ_{eff}[d,e] 0.03	0.05	0.2	0.5	0.82	0.75-in. Air Space[c]: Effective Emittance ϵ_{eff}[d,e] 0.03	0.05	0.2	0.5	0.82
Horiz.	Up ↑	90	10	2.13	2.03	1.51	0.99	0.73	2.34	2.22	1.61	1.04	0.75
		50	30	1.62	1.57	1.29	0.96	0.75	1.71	1.66	1.35	0.99	0.77
		50	10	2.13	2.05	1.60	1.11	0.84	2.30	2.21	1.70	1.16	0.87
		0	20	1.73	1.70	1.45	1.12	0.91	1.83	1.79	1.52	1.16	0.93
		0	10	2.10	2.04	1.70	1.27	1.00	2.23	2.16	1.78	1.31	1.02
		−50	20	1.69	1.66	1.49	1.23	1.04	1.77	1.74	1.55	1.27	1.07
		−50	10	2.04	2.00	1.75	1.40	1.16	2.16	2.11	1.84	1.46	1.20
45° Slope	Up ↗	90	10	2.44	2.31	1.65	1.06	0.76	2.96	2.78	1.88	1.15	0.81
		50	30	2.06	1.98	1.56	1.10	0.83	1.99	1.92	1.52	1.08	0.82
		50	10	2.55	2.44	1.83	1.22	0.90	2.90	2.75	2.00	1.29	0.94
		0	20	2.20	2.14	1.76	1.30	1.02	2.13	2.07	1.72	1.28	1.00
		0	10	2.63	2.54	2.03	1.44	1.10	2.72	2.62	2.08	1.47	1.12
		−50	20	2.08	2.04	1.78	1.42	1.17	2.05	2.01	1.76	1.41	1.16
		−50	10	2.62	2.56	2.17	1.66	1.33	2.53	2.47	2.10	1.62	1.30
Vertical	Horiz. →	90	10	2.47	2.34	1.67	1.06	0.77	3.50	3.24	2.08	1.22	0.84
		50	30	2.57	2.46	1.84	1.23	0.90	2.91	2.77	2.01	1.30	0.94
		50	10	2.66	2.54	1.88	1.24	0.91	3.70	3.46	2.35	1.43	1.01
		0	20	2.82	2.72	2.14	1.50	1.13	3.14	3.02	2.32	1.58	1.18
		0	10	2.93	2.82	2.20	1.53	1.15	3.77	3.59	2.64	1.73	1.26
		−50	20	2.90	2.82	2.35	1.76	1.39	2.90	2.83	2.36	1.77	1.39
		−50	10	3.20	3.10	2.54	1.87	1.46	3.72	3.60	2.87	2.04	1.56
45° Slope	Down ↘	90	10	2.48	2.34	1.67	1.06	0.77	3.53	3.27	2.10	1.22	0.84
		50	30	2.64	2.52	1.87	1.24	0.91	3.43	3.23	2.24	1.39	0.99
		50	10	2.67	2.55	1.89	1.25	0.92	3.81	3.57	2.40	1.45	1.02
		0	20	2.91	2.80	2.19	1.52	1.15	3.75	3.57	2.63	1.72	1.26
		0	10	2.94	2.83	2.21	1.53	1.15	4.12	3.91	2.81	1.80	1.30
		−50	20	3.16	3.07	2.52	1.86	1.45	3.78	3.65	2.90	2.05	1.57
		−50	10	3.26	3.16	2.58	1.89	1.47	4.35	4.18	3.22	2.21	1.66
Horiz.	Down ↓	90	10	2.48	2.34	1.67	1.06	0.77	3.55	3.29	2.10	1.22	0.85
		50	30	2.66	2.54	1.88	1.24	0.91	3.77	3.52	2.38	1.44	1.02
		50	10	2.67	2.55	1.89	1.25	0.92	3.84	3.59	2.41	1.45	1.02
		0	20	2.94	2.83	2.20	1.53	1.15	4.18	3.96	2.83	1.81	1.30
		0	10	2.96	2.85	2.22	1.53	1.16	4.25	4.02	2.87	1.82	1.31
		−50	20	3.25	3.15	2.58	1.89	1.47	4.60	4.41	3.36	2.28	1.69
		−50	10	3.28	3.18	2.60	1.90	1.47	4.71	4.51	3.42	2.30	1.71

Position of Air Space	Direction of Heat Flow	Air Space: Mean Temp.[d], °F	Air Space: Temp. Diff.[d], °F	1.5-in. Air Space[c]: Effective Emittance ϵ_{eff}[d,e] 0.03	0.05	0.2	0.5	0.82	3.5-in. Air Space[c]: Effective Emittance ϵ_{eff}[d,e] 0.03	0.05	0.2	0.5	0.82
Horiz.	Up ↑	90	10	2.55	2.41	1.71	1.08	0.77	2.84	2.66	1.83	1.13	0.80
		50	30	1.87	1.81	1.45	1.04	0.80	2.09	2.01	1.58	1.10	0.84
		50	10	2.50	2.40	1.81	1.21	0.89	2.80	2.66	1.95	1.28	0.93
		0	20	2.01	1.95	1.63	1.23	0.97	2.25	2.18	1.79	1.32	1.03
		0	10	2.43	2.35	1.90	1.38	1.06	2.71	2.62	2.07	1.47	1.12
		−50	20	1.94	1.91	1.68	1.36	1.13	2.19	2.14	1.86	1.47	1.20
		−50	10	2.37	2.31	1.99	1.55	1.26	2.65	2.58	2.18	1.67	1.33
45° Slope	Up ↗	90	10	2.92	2.73	1.86	1.14	0.80	3.18	2.96	1.97	1.18	0.82
		50	30	2.14	2.06	1.61	1.12	0.84	2.26	2.17	1.67	1.15	0.86
		50	10	2.88	2.74	1.99	1.29	0.94	3.12	2.95	2.10	1.34	0.96
		0	20	2.30	2.23	1.82	1.34	1.04	2.42	2.35	1.90	1.38	1.06
		0	10	2.79	2.69	2.12	1.49	1.13	2.98	2.87	2.23	1.54	1.16
		−50	20	2.22	2.17	1.88	1.49	1.21	2.34	2.29	1.97	1.54	1.25
		−50	10	2.71	2.64	2.23	1.69	1.35	2.87	2.79	2.33	1.75	1.39
Vertical	Horiz. →	90	10	3.99	3.66	2.25	1.27	0.87	3.69	3.40	2.15	1.24	0.85
		50	30	2.58	2.46	1.84	1.23	0.90	2.67	2.55	1.89	1.25	0.91
		50	10	3.79	3.55	2.39	1.45	1.02	3.63	3.40	2.32	1.42	1.01
		0	20	2.76	2.66	2.10	1.48	1.12	2.88	2.78	2.17	1.51	1.14
		0	10	3.51	3.35	2.51	1.67	1.23	3.49	3.33	2.50	1.67	1.23
		−50	20	2.64	2.58	2.18	1.66	1.33	2.82	2.75	2.30	1.73	1.37
		−50	10	3.31	3.21	2.62	1.91	1.48	3.40	3.30	2.67	1.94	1.50
45° Slope	Down ↘	90	10	5.07	4.55	2.56	1.36	0.91	4.81	4.33	2.49	1.34	0.90
		50	30	3.58	3.36	2.31	1.42	1.00	3.51	3.30	2.28	1.40	1.00
		50	10	5.10	4.66	2.85	1.60	1.09	4.74	4.36	2.73	1.57	1.08
		0	20	3.85	3.66	2.68	1.74	1.27	3.81	3.63	2.66	1.74	1.27
		0	10	4.92	4.62	3.16	1.94	1.37	4.59	4.32	3.02	1.88	1.34
		−50	20	3.62	3.50	2.80	2.01	1.54	3.77	3.64	2.90	2.05	1.57
		−50	10	4.67	4.47	3.40	2.29	1.70	4.50	4.32	3.31	2.25	1.68
Horiz.	Down ↓	90	10	6.09	5.35	2.79	1.43	0.94	10.07	8.19	3.41	1.57	1.00
		50	30	6.27	5.63	3.18	1.70	1.14	9.60	8.17	3.86	1.88	1.22
		50	10	6.61	5.90	3.27	1.73	1.15	11.15	9.27	4.09	1.93	1.24
		0	20	7.03	6.43	3.91	2.19	1.49	10.90	9.52	4.87	2.47	1.62
		0	10	7.31	6.66	4.00	2.22	1.51	11.97	10.32	5.08	2.52	1.64
		−50	20	7.73	7.20	4.77	2.85	1.99	11.64	10.49	6.02	3.25	2.18
		−50	10	8.09	7.52	4.91	2.89	2.01	12.98	11.56	6.36	3.34	2.22

[a]See Chapter 20 section Factors Affecting Heat Transfer across Air Spaces. Thermal resistance values were determined from the relation, $R = 1/C$, where $C = h_c + \epsilon_{eff} h_r$, h_c is the conduction-convection coefficient, $\epsilon_{eff} h_r$ is the radiation coefficient $\cong 0.00686\,\epsilon_{eff}\,[(t_m + 460)/100]^3$, and t_m is the mean temperature of the air space. Values for h_c were determined from data developed by Robinson *et al.* (1954). Equations (5) through (7) in Yarbrough (1983) show the data in Table 2 in analytic form. For extrapolation from Table 2 to air spaces less than 0.5 in. (as in insulating window glass), assume $h_c = 0.159\,(1 + 0.0016\,t_m)/l$ where l is the air space thickness in inches, and h_c is heat transfer through the air space only.

[b]Values are based on data presented by Robinson *et al.* (1954). (Also see Chapter 3, Tables 3 and 4, and Chapter 39). Values apply for ideal conditions, *i.e.*, air spaces of uniform thickness bounded by plane, smooth, parallel surfaces with no air leakage to or from the space. When accurate values are required, use overall U-factors determined through calibrated hot box (ASTM C 976) or guarded hot box (ASTM C 236) testing. Thermal resistance values for multiple air spaces must be based on careful estimates of mean temperature differences for each air space.

[c]A single resistance value cannot account for multiple air spaces; each air space requires a separate resistance calculation that applies only for the established boundary conditions. Resistances of horizontal spaces with heat flow downward are substantially independent of temperature difference.

[d]Interpolation is permissible for other values of mean temperature, temperature difference, and effective emittance ϵ_{eff}. Interpolation and moderate extrapolation for air spaces greater than 3.5 in. are also permissible.

[e]Effective emittance ϵ_{eff} of the air space is given by $1/\epsilon_{eff} = 1/\epsilon_1 + 1/\epsilon_2 - 1$, where ϵ_1 and ϵ_2 are the emittances of the surfaces of the air space (see Table 3).

Vapor retarders, outlined in Chapters 20 and 21, require special attention. Moisture from condensation or other sources may reduce the thermal resistance of insulation, but the effect of moisture must be determined for each material. For example, some materials with large air spaces are not affected significantly if the moisture content is less than 10% by weight, while the effect of moisture on other materials is approximately linear.

Ideal conditions of components and installations are assumed in calculating overall R-values (*i.e.*, insulating materials are of uniform nominal thickness and thermal resistance, air spaces are of uniform thickness and surface temperature, moisture effects are not involved, and installation details are in accordance with design). The National Bureau of Standards' Building Materials and Structures Report BMS 151 shows that measured values differ from calculated values for certain insulated constructions. For this reason, some engineers decrease the calculated R-values a moderate amount to account for departures of constructions from requirements and practices.

Tables 2 and 3 give values for well-sealed systems constructed with care. Field applications can differ substantially from laboratory test conditions. Air gaps in these insulation systems can seriously degrade thermal performance as a result of air movement due to both natural and forced convection. Sabine *et al.* (1975) found that the tabular values are not necessarily additive for multiple-layer, low-emittance air spaces, and tests on actual constructions should be conducted to accurately determine thermal resistance values.

Values for foil insulation products supplied by manufacturers must also be used with caution because they apply only to systems that are identical to the configuration in which the product was tested. In addition, surface oxidation, dust accumulation, condensation, and other factors that change the condition of the low-emittance surface can reduce the thermal effectiveness of these insulation systems (Moroz 1951, Hooper and Moroz 1952). Deterioration results from contact with several types of solutions, either acidic or basic (*e.g.*, wet cement mortar or the preservatives found in decay-resistant lumber). Polluted environments may cause rapid and severe material degradation. However, site inspections show a predominance of well-preserved installations and only a small number of cases in which rapid and severe deterioration has occurred. An extensive review of the reflective building insulation system performance literature is provided by Goss and Miller (1989).

Table 3 Emittance Values of Various Surfaces and Effective Emittances of Air Spaces[a]

Surface	Average Emittance ϵ	Effective Emittance ϵ_{eff} of Air Space: One Surface Emittance ϵ; Other, 0.9	Effective Emittance ϵ_{eff} of Air Space: Both Surfaces Emittance ϵ
Aluminum foil, bright	0.05	0.05	0.03
Aluminum foil, with condensate just visible (> 0.7gr/ft^2)	0.30[b]	0.29	—
Aluminum foil, with condensate clearly visible (> 2.9 gr/ft^2)	0.70[b]	0.65	—
Aluminum sheet	0.12	0.12	0.06
Aluminum coated paper, polished	0.20	0.20	0.11
Steel, galvanized, bright	0.25	0.24	0.15
Aluminum paint	0.50	0.47	0.35
Building materials: wood, paper, masonry, nonmetallic paints	0.90	0.82	0.82
Regular glass	0.84	0.77	0.72

[a]These values apply in the 4 to 40 μm range of the electromagnetic spectrum.

[b]Values are based on data presented by Bassett and Trethowen (1984).

CALCULATING OVERALL THERMAL RESISTANCES

Relatively small conductive elements within an insulating layer or thermal bridges can substantially reduce the average thermal resistance of a component. Examples include wood and metal studs in frame walls, concrete webs in concrete masonry walls, and metal ties or other elements in insulated wall panels. The following examples illustrate how to calculate R-values and U-factors for components containing thermal bridges.

The following conditions are assumed in calculating the design R-values:

- Equilibrium or steady-state heat transfer, disregarding effects of heat storage
- Surrounding surfaces at ambient air temperature
- Exterior wind velocity of 15 mph for winter (surface with R = 0.17 °F·ft^2·h/Btu) and 7.5 mph for summer (surface with R = 0.25 °F·ft^2·h/Btu)
- Surface emittance of ordinary building materials is 0.90

Wood Frame Walls

The average overall R-values and U-factors of wood frame walls can be calculated by assuming either parallel heat flow paths through areas with different thermal resistances or isothermal planes. Equations (1) through (5) from Chapter 20 are used.

For stud walls 16 in. on center (OC), the fraction of insulated cavity is about 0.75; the fraction of studs, plates, and sills is 0.21; and the fraction of headers is 0.04. For studs 24 in. OC, the respective values are 0.78, 0.18, and 0.04. These fractions contain an allowance for multiple studs, plates, sills, extra framing around windows, headers, and band joists.

Example 1A. Calculate the U-factor of the 2 by 4 stud wall shown in Figure 2. The studs are at 16 in. OC. There is 3.5-in. mineral fiber batt insulation (R-13) in the stud space. The inside finish is 0.5-in. gypsum wallboard; the outside is finished with rigid foam insulating sheathing (R-4) and 0.5-in. by 8-in. wood bevel lapped siding. The insulated cavity occupies approxi-

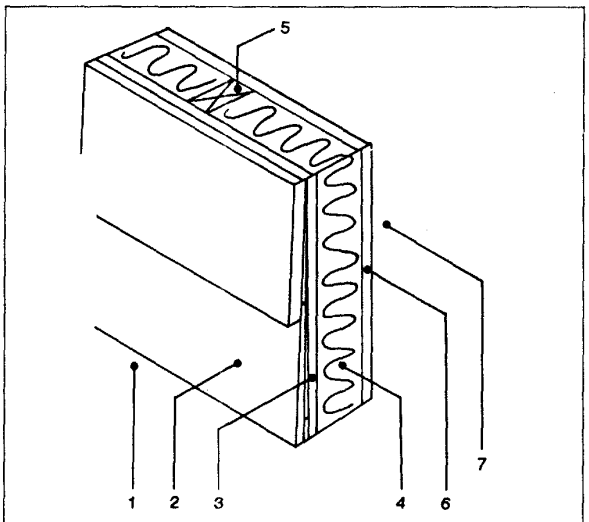

1. Outside surface
2. Wood bevel lapped siding
3. Sheathing (rigid foam insulation, Example 1A; wood fiberboard, Example 1B)
4. Mineral fiber batt insulation
5. Wood stud (nominal 2×4, Example 1A; nominal 2×6, Example 1B)
6. Gypsum wallboard
7. Inside surface

Fig. 2 Insulated Wood Frame Wall (Examples 1A and B)

mately 75% of the transmission area; the studs, plates, and sills occupy 21%; and the headers occupy 4%.

Solution: Obtain the R-values of the various building elements from Tables 1 and 4. Assume the R-value of the wood framing is R-1.25 per inch. Also, assume the headers are solid wood, in this case, and group them with the studs, plates, and sills.

Element	R (Insulated Cavity)	R (Studs, Plates, and Headers)
1. Outside surface, 15 mph wind	0.17	0.17
2. Wood bevel lapped siding	0.81	0.81
3. Rigid foam insulating sheathing	4.0	4.0
4. Mineral fiber batt insulation, 3.5 in.	13.0	—
5. Wood stud, nominal 2 × 4	—	4.38
6. Gypsum wallboard, 0.5 in.	0.45	0.45
7. Inside surface, still air	0.68	0.68
	R_1 = 19.11	R_2 = 10.49

Since the U-factor is the reciprocal of R-value, $U_1 = 0.052$ and $U_2 = 0.095$ Btu/·h·ft^2·°F.

If the wood framing (thermal bridging) is not included, Equation (3) from Chapter 20 may be used to calculate the U-factor of the wall as follows:

$$U_{av} = U_1 = 1/R_1 = 0.052 \text{ Btu/h·ft}^2\text{·°F}$$

If the wood framing is accounted for using the parallel flow method, the U-factor of the wall is determined using Equation (5) from Chapter 20 as follows:

$$U_{av} = (0.75 \times 0.052) + (0.25 \times 0.095) = 0.063 \text{ Btu/h·ft}^2\text{·°F}$$

If the wood framing is included using the isothermal planes method, the U-factor of the wall is determined using Equations (2) and (3) from Chapter 20 as follows:

$$R_{T(av)} = 4.98 + 1/[(0.75/13.0) + (0.25/4.38)] + 1.13$$
$$= 14.82 \text{°F·ft}^2\text{·h/Btu}$$
$$U_{av} = 0.067 \text{ Btu/h·ft}^2\text{·°F}$$

For a frame wall with a 24-in. OC stud space, the average overall R-value becomes 15.18 °F·ft^2·h/Btu. Similar calculation procedures can be used to evaluate other wall designs.

Example 1B. Calculate the U-factor of a 2 by 6 stud wall, similar to the one considered in Example IA, except that the sheathing is 0.5-in. wood fiberboard and the studs are at 24 in. OC. There is 5.5-in. mineral fiber batt insulation (R-21) in the stud space. Assume the headers are double 2 by 8 framing (with a 0.5-in. air space), with a 2.0-in. air space between the headers and the wallboard.

Solution: Obtain the R-values of the various building elements from Tables 1 and 4. Assume the R-value of the wood framing is 1.25 per inch. In this case, the headers must be treated separately.

Element	R (Insulated Cavity)	R (Studs and Plates)	R (Headers)
1. Outside surface, 15 mph wind	0.17	0.17	0.17
2. Wood bevel lapped siding	0.81	0.81	0.81
3. Wood fiberboard sheathing, 0.5 in.	1.32	1.32	1.32
4. Mineral fiber batt insulation, 5.5 in.	21.0	—	—
5. Wood stud, nominal 2 × 6	—	6.88	—
6. Wood headers, double 2 × 8	—	—	3.75
7. Air space, 0.5 in.	—	—	0.90
8. Air space, 2 in.	—	—	0.90
9. Gypsum wallboard, 0.5 in.	0.45	0.45	0.45
10. Inside surface, still air	0.68	0.68	0.68
	R_1 = 24.43	R_2 = 10.31	R_3 = 8.98

Since U-factor is the reciprocal of R-value, $U_1 = 0.041$, $U_2 = 0.097$, and $U_3 = 0.111$ Btu/h·ft^2·°F.

If the wood framing is accounted for using the parallel flow method, the U-factor of the wall is determined using Equation (5) from Chapter 20 as follows:

$$U_{av} = (0.78 \times 0.041) + (0.18 \times 0.097) + (0.04 \times 0.111)$$
$$= 0.054 \text{ Btu·h·ft}^2\text{·°F}$$

If the wood framing is included using the isothermal planes method, the U-factor of the wall is determined using Equations (2) and (3) from Chapter 20 as follows:

$$R_{T(av)} = 2.30 + 1/[(0.78/21.0) + (0.18/6.88) + (0.04/5.55)] + 1.13$$
$$= 17.61 \text{°F·ft}^2\text{·h/Btu}$$
$$U_{av} = 0.057 \text{ Btu/h·ft}^2\text{·°F}$$

If the headers are insulated with R-10 insulation, the average overall R-value becomes 18.57 °F·ft^2·h/Btu.

For a frame wall with a 16-in. OC stud space and uninsulated headers, the average overall R-value becomes 17.05 °F·ft^2·h/Btu. If the headers are insulated with R-10 insulation, the average overall R-value becomes 17.93 °F·ft^2·h/Btu. Similar calculation procedures can be used to evaluate other wall designs.

Masonry Walls

The average overall R-values of masonry walls can be estimated by assuming a combination of layers in series, one or more of which provides parallel paths. This method is used because heat flows laterally through block face shells so that transverse isothermal planes result. Average total resistance $R_{T(av)}$ is the sum of the resistances of the layers between such planes, each layer calculated as shown in Example 2.

Example 2. Calculate the overall thermal resistance and average U-factor of the 7-5/8-in. thick insulated concrete block wall shown in Figure 3. The two-core block has an average web thickness of 1-in. and a face shell thickness of 1-1/4-in. Overall block dimensions are 7-5/8 by 7-5/8 by 15-5/8 in. Measured thermal resistances of 112 lb/ft^3 concrete and 7 lb/ft^3 expanded perlite insulation are 0.10 and 2.90 °F·ft^2·h/Btu per inch, respectively.

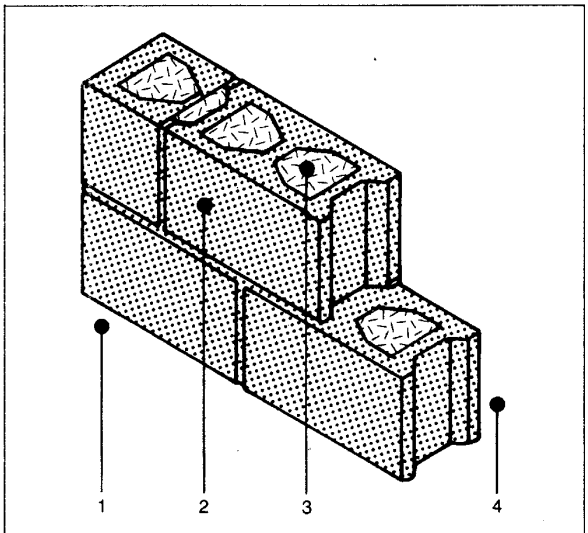

Fig. 3 Insulated Concrete Block Wall (Example 2)

Solution: The equation used to determine the overall thermal resistance of the insulated concrete block wall is derived from Equations (2) and (5) from Chapter 20 and is given below:

$$R_{T(av)} = R_i + R_f + \left(\frac{a_w}{R_w} + \frac{a_c}{R_c}\right)^{-1} + R_o$$

where

$R_{T(av)}$ = overall thermal resistance based on assumption of isothermal planes
R_i = thermal resistance of inside air surface film (still air)
R_o = thermal resistance of outside air surface film (15 mph wind)
R_f = total thermal resistance of face shells
R_c = thermal resistance of cores between face shells
R_w = thermal resistance of webs between face shells
a_w = fraction of total area transverse to heat flow represented by webs of blocks
a_c = fraction of total area transverse to heat flow represented by cores of blocks

From the information given and the data in Table 1, determine the values needed to compute the overall thermal resistance.

$R_i = 0.68$
$R_o = 0.17$
$R_f = (2)(1.25)(0.10) = 0.25$
$R_c = (5.125)(2.90) = 14.86$
$R_w = (5.125)(0.10) = 0.51$
$a_w = 3/15.625 = 0.192$
$a_c = 12.625/15.625 = 0.808$

Using the equation given, the overall thermal resistance and average U-factor are calculated as follows:

$$R_{T(av)} = 0.68 + 0.25 + (0.51)(14.86)/[(0.808)(0.51) + (0.192)(14.86)] + 0.17$$
$$= 0.68 + 0.25 + 2.33 + 0.17 = 3.43\,°F \cdot ft^2 \cdot h/Btu$$
$$U_{av} = 1/3.43 = 0.29\ Btu/h \cdot ft^2 \cdot °F$$

Based on guarded hot box tests of this wall without mortar joints, Tye and Spinney (1980) measured the average R-value for this insulated concrete block wall as 3.13 °F · ft² · h/Btu.

Assuming parallel heat flow only, the calculated resistance is usually higher than that calculated on the assumption of isothermal planes. The actual resistance generally is some value between the two calculated values. In the absence of test values, examination of the construction usually reveals whether a value closer to the higher or lower calculated R-value should be used. Generally, if the construction contains a layer in which lateral conduction is high compared with transmittance through the construction, the calculation with isothermal planes should be used. If the construction has no layer of high lateral conductance, the parallel heat flow calculation should be used.

Hot box tests of insulated and uninsulated masonry walls constructed with block of conventional configuration show that thermal resistances calculated using the isothermal planes heat flow method agree well with measured values (Van Geem 1985, Valore 1980, Shu *et al.* 1979). Neglecting horizontal mortar joints in conventional block can result in thermal transmittance values up to 16% lower than actual, depending on the density and thermal properties of the masonry, and 1 to 6% lower, depending on the core insulation material (Van Geem 1985, McIntyre 1984). For aerated concrete block walls, other solid masonry, and multicore block walls with full mortar joints, neglecting mortar joints can cause errors in R-values up to 40% (Valore 1988). Horizontal mortar joints usually found in concrete block wall construction are neglected in Example 2.

Panels Containing Metal

Curtain wall constructions often include metallic and other thermal bridges. The thermal resistance of panels can be significantly reduced by metallic thermal bridges. However, the capacity of the adjacent facing materials to transmit heat transversely to the metal is limited, and some contact resistance between all materials in contact limits the reduction. Contact resistances in building structures are only 0.06 to 0.6 °F · ft² · h/Btu—too small to be of concern in many cases. However, the contact resistances of steel framing members are important. Also, in many cases (as illustrated in Example 3), the area of metal in contact with the facing greatly exceeds the thickness of the metal which mitigates the influence.

Thermal characteristics for panels of sandwich construction can be computed by combining the thermal resistances of the various layers. However, few panels are true sandwich constructions; many have ribs and stiffeners that create complicated heat flow paths. R-values for the assembled sections should be determined on a representative sample by using a hot box method. If the sample is a wall section with air cavities on both sides of fibrous insulation, the sample must be of representative height since convective airflow can contribute significantly to heat flow through the test section. Computer modeling can also be useful, but all heat transfer mechanisms must be considered.

In Example 3, the metal member is only 0.020 in. thick, but it is in contact with adjacent facings over a 1.25 in.-wide area. The steel member is 3.50 in. deep, has a thermal resistance of approximately 0.011 °F · ft² · h/Btu, and is virtually isothermal. The calculation involves careful selection of the appropriate thickness for the steel member. If the member is assumed to be 0.020 in. thick, the fact that the flange transmits heat to the adjacent facing is ignored, and the heat flow through the steel is underestimated. If the member is assumed to be 1.25 in. thick, the heat flow through the steel is overestimated. In Example 3, the steel member behaves in much the same way as a rectangular member 1.25 in. thick and 3.50 in. deep with a thermal resistance of 0.69 °F · ft² · h/Btu [(1.25/0.020) × 0.011] does. The Building Research Association of New Zealand (BRANZ) commonly uses this approximation.

Example 3. Calculate the C-factor of the insulated steel frame wall shown in Figure 4. Assume that the steel member has an R-value of 0.69 °F · ft² · h/Btu and that the framing behaves as though it occupies approximately 8% of the transmission area.

Solution: Obtain the R-values of the various building elements from Table 4.

Element	R (Insul.)	R (Framing)
1. 0.5-in. gypsum wallboard	0.45	0.45
2. 3.5-in. mineral fiber batt insulation	11	—
3. Steel framing member	—	0.69
4. 0.5-in. gypsum wallboard	0.45	0.45
	$R_1 = 11.90$	$R_2 = 1.59$

Therefore, $C_1 = 0.084$; $C_2 = 0.629$ Btu/h · ft² °F.

If the steel framing (thermal bridging) is not considered, the C-factor of the wall is calculated using Equation (3) from Chapter 20 as follows:

$$C_{av} = C_1 = 1/R_1 = 0.084\ Btu/h \cdot ft^2 \cdot °F$$

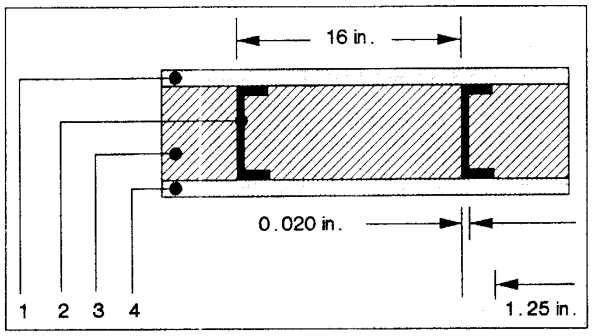

Fig. 4 Insulated Steel Frame Wall (Example 3)

Table 4 Typical Thermal Properties of Common Building and Insulating Materials—Design Values[a]

Description	Density, lb/ft³	Conductivity[b] (k), Btu·in / h·ft²·°F	Conductance (C), Btu / h·ft²·°F	Resistance [c] (R): Per Inch Thickness (1/k), °F·ft²·h / Btu·in	Resistance [c] (R): For Thickness Listed (1/C), °F·ft²·h / Btu	Specific Heat, Btu / lb·°F
BUILDING BOARD						
Asbestos-cement board	120	4.0	—	0.25	—	0.24
Asbestos-cement board 0.125 in.	120	—	33.00	—	0.03	
Asbestos-cement board 0.25 in.	120	—	16.50	—	0.06	
Gypsum or plaster board 0.375 in.	50	—	3.10	—	0.32	0.26
Gypsum or plaster board 0.5 in.	50	—	2.22	—	0.45	
Gypsum or plaster board 0.625 in.	50	—	1.78	—	0.56	
Plywood (Douglas Fir)[d]	34	0.80	—	1.25	—	0.29
Plywood (Douglas Fir) 0.25 in.	34	—	3.20	—	0.31	
Plywood (Douglas Fir) 0.375 in.	34	—	2.13	—	0.47	
Plywood (Douglas Fir) 0.5 in.	34	—	1.60	—	0.62	
Plywood (Douglas Fir) 0.625 in.	34	—	1.29	—	0.77	
Plywood or wood panels 0.75 in.	34	—	1.07	—	0.93	0.29
Vegetable fiber board						
Sheathing, regular density[e] 0.5 in.	18	—	0.76	—	1.32	0.31
0.78125 in.	18	—	0.49	—	2.06	
Sheathing intermediate density[e] 0.5 in.	22	—	0.92	—	1.09	0.31
Nail-base sheathing[e] 0.5 in.	25	—	0.94	—	1.06	0.31
Shingle backer 0.375 in.	18	—	1.06	—	0.94	0.31
Shingle backer 0.3125 in.	18	—	1.28	—	0.78	
Sound deadening board 0.5 in.	15	—	0.74	—	1.35	0.30
Tile and lay-in panels, plain or acoustic	18	0.40	—	2.50	—	0.14
0.5 in.	18	—	0.80	—	1.25	
0.75 in.	18	—	0.53	—	1.89	
Laminated paperboard	30	0.50	—	2.00	—	0.33
Homogeneous board from repulped paper	30	0.50	—	2.00	—	0.28
Hardboard[e]						
Medium density	50	0.73	—	1.37	—	0.31
High density, service-tempered grade and service grade	55	0.82	—	1.22	—	0.32
High density, standard-tempered grade	63	1.00	—	1.00	—	0.32
Particleboard[e]						
Low density	37	0.71	—	1.41	—	0.31
Medium density	50	0.94	—	1.06	—	0.31
High density	62.5	1.18	—	0.85	—	0.31
Underlayment 0.625 in.	40	—	1.22	—	0.82	0.29
Waferboard	37	0.63	—	1.59	—	—
Wood subfloor 0.75 in.	—	—	1.06	—	0.94	0.33
BUILDING MEMBRANE						
Vapor—permeable felt	—	—	16.70	—	0.06	
Vapor—seal, 2 layers of mopped 15-lb felt	—	—	8.35	—	0.12	
Vapor—seal, plastic film	—	—	—	—	Negl.	
FINISH FLOORING MATERIALS						
Carpet and fibrous pad	—	—	0.48	—	2.08	0.34
Carpet and rubber pad	—	—	0.81	—	1.23	0.33
Cork tile 0.125 in.	—	—	3.60	—	0.28	0.48
Terrazzo 1 in.	—	—	12.50	—	0.08	0.19
Tile—asphalt, linoleum, vinyl, rubber	—	—	20.00	—	0.05	0.30
vinyl asbestos						0.24
ceramic						0.19
Wood, hardwood finish 0.75 in.	—	—	1.47	—	0.68	
INSULATING MATERIALS						
Blanket and Batt[f,g]						
Mineral fiber, fibrous form processed from rock, slag, or glass						
approx. 3–4 in.	0.4–2.0	—	0.091	—	11	
approx. 3.5 in.	0.4–2.0	—	0.077	—	13	
approx. 3.5 in.	1.2–1.6	—	0.067	—	15	
approx. 5.5–6.5 in.	0.4–2.0	—	0.053	—	19	
approx. 5.5 in.	0.6–1.0	—	0.048	—	21	
approx. 6–7.5 in.	0.4–2.0	—	0.045	—	22	
approx. 8.25–10 in.	0.4–2.0	—	0.033	—	30	
approx. 10–13 in.	0.4–2.0	—	0.026	—	38	
Board and Slabs						
Cellular glass	8.0	0.33	—	3.03	—	0.18
Glass fiber, organic bonded	4.0–9.0	0.25	—	4.00	—	0.23
Expanded perlite, organic bonded	1.0	0.36	—	2.78	—	0.30
Expanded rubber (rigid)	4.5	0.22	—	4.55	—	0.40
Expanded polystyrene, extruded (smooth skin surface) (CFC-12 exp.)	1.8–3.5	0.20	—	5.00	—	0.29
Expanded polystyrene, extruded (smooth skin surface) (HCFC-142b exp.)[h]	1.8–3.5	0.20	—	5.00	—	0.29

Table 4 Typical Thermal Properties of Common Building and Insulating Materials—Design Values[a] (*Continued*)

Description	Density, lb/ft³	Conductivity[b] (*k*), Btu·in / h·ft²·°F	Conductance (*C*), Btu / h·ft²·°F	Resistance[c] (*R*): Per Inch Thickness (1/*k*), °F·ft²·h / Btu·in	Resistance[c] (*R*): For Thickness Listed (1/*C*), °F·ft²·h / Btu	Specific Heat, Btu / lb·°F
Expanded polystyrene, molded beads	1.0	0.26	—	3.85	—	—
	1.25	0.25	—	4.00	—	—
	1.5	0.24	—	4.17	—	—
	1.75	0.24	—	4.17	—	—
	2.0	0.23	—	4.35	—	—
Cellular polyurethane/polyisocyanurate[i] (CFC-11 exp.) (unfaced)	1.5	0.16–0.18	—	6.25–5.56	—	0.38
Cellular polyisocyanurate[j] (CFC-11 exp.)(gas-permeable facers)	1.5–2.5	0.16–0.18	—	6.25–5.56	—	0.22
Cellular polyisocyanurate[j] (CFC-11 exp.)(gas-impermeable facers)	2.0	0.14	—	7.04	—	0.22
Cellular phenolic (closed cell)(CFC-11, CFC-113 exp.)	3.0	0.12	—	8.20	—	—
Cellular phenolic (open cell)	1.8–2.2	0.23	—	4.40	—	—
Mineral fiber with resin binder	15.0	0.29	—	3.45	—	0.17
Mineral fiberboard, wet felted						
Core or roof insulation	16–17	0.34	—	2.94	—	—
Acoustical tile	18.0	0.35	—	2.86	—	0.19
Acoustical tile	21.0	0.37	—	2.70	—	—
Mineral fiberboard, wet molded						
Acoustical tile[k]	23.0	0.42	—	2.38	—	0.14
Wood or cane fiberboard						
Acoustical tile,[k] 0.5 in.	—	—	0.80	—	1.25	0.31
Acoustical tile[k] 0.75 in.	—	—	0.53	—	1.89	—
Interior finish (plank, tile)	15.0	0.35	—	2.86	—	0.32
Cement fiber slabs (shredded wood with Portland cement binder)	25–27.0	0.50–0.53	—	2.0–1.89	—	—
Cement fiber slabs (shredded wood with magnesia oxysulfide binder)	22.0	0.57	—	1.75	—	0.31
Loose Fill						
Cellulosic insulation (milled paper or wood pulp)	2.3–3.2	0.27–0.32	—	3.70–3.13	—	0.33
Perlite, expanded	2.0–4.1	0.27–0.31	—	3.7–3.3	—	0.26
	4.1–7.4	0.31–0.36	—	3.3–2.8	—	—
	7.4–11.0	0.36–0.42	—	2.8–2.4	—	—
Mineral fiber (rock, slag, or glass)[g]						
approx. 3.75–5 in.	0.6–2.0	—	—	—	11.0	0.17
approx. 6.5–8.75 in.	0.6–2.0	—	—	—	19.0	—
approx. 7.5–10 in.	0.6–2.0	—	—	—	22.0	—
approx. 10.25–13.75 in.	0.6–2.0	—	—	—	30.0	—
Mineral fiber (rock, slag, or glass)[g]						
approx. 3.5 in. (closed sidewall application)	2.0–3.5	—	—	—	12.0–14.0	—
Vermiculite, exfoliated	7.0–8.2	0.47	—	2.13	—	0.32
	4.0–6.0	0.44	—	2.27	—	—
Spray Applied						
Polyurethane foam	1.5–2.5	0.16–0.18	—	6.25–5.56	—	—
Ureaformaldehyde foam	0.7–1.6	0.22–0.28	—	4.55–3.57	—	—
Cellulosic fiber	3.5–6.0	0.29–0.34	—	3.45–2.94	—	—
Glass fiber	3.5–4.5	0.26–0.27	—	3.85–3.70	—	—
METALS (See Chapter 36, Table 3)						
ROOFING						
Asbestos-cement shingles	120	—	4.76	—	0.21	0.24
Asphalt roll roofing	70	—	6.50	—	0.15	0.36
Asphalt shingles	70	—	2.27	—	0.44	0.30
Built-up roofing 0.375 in.	70	—	3.00	—	0.33	0.35
Slate 0.5 in.	—	—	20.00	—	0.05	0.30
Wood shingles, plain and plastic film faced	—	—	1.06	—	0.94	0.31
PLASTERING MATERIALS						
Cement plaster, sand aggregate	116	5.0	—	0.20	—	0.20
Sand aggregate 0.375 in.	—	—	13.3	—	0.08	0.20
Sand aggregate 0.75 in.	—	—	6.66	—	0.15	0.20
Gypsum plaster:						
Lightweight aggregate 0.5 in.	45	—	3.12	—	0.32	—
Lightweight aggregate 0.625 in.	45	—	2.67	—	0.39	—
Lightweight aggregate on metal lath 0.75 in.	—	—	2.13	—	0.47	—
Perlite aggregate	45	1.5	—	0.67	—	0.32
Sand aggregate	105	5.6	—	0.18	—	0.20
Sand aggregate 0.5 in.	105	—	11.10	—	0.09	—
Sand aggregate 0.625 in.	105	—	9.10	—	0.11	—
Sand aggregate on metal lath 0.75 in.	—	—	7.70	—	0.13	—
Vermiculite aggregate	45	1.7	—	0.59	—	—
MASONRY MATERIALS						
Masonry Units						
Brick, fired clay	150	8.4–10.2	—	0.12–0.10	—	—
	140	7.4–9.0	—	0.14–0.11	—	—
	130	6.4–7.8	—	0.16–0.12	—	—
	120	5.6–6.8	—	0.18–0.15	—	0.19
	110	4.9–5.9	—	0.20–0.17	—	—

Table 4 Typical Thermal Properties of Common Building and Insulating Materials—Design Values[a] (*Continued*)

Description	Density, lb/ft³	Conductivity[b] (*k*), Btu·in / h·ft²·°F	Conductance (*C*), Btu / h·ft²·°F	Resistance [c] (*R*) Per Inch Thickness (1/*k*), °F·ft²·h / Btu·in	Resistance [c] (*R*) For Thickness Listed (1/*C*), °F·ft²·h / Btu	Specific Heat, Btu / lb·°F
Brick, fired clay *continued*	100	4.2-5.1	—	0.24-0.20	—	—
	90	3.6-4.3	—	0.28-0.24	—	—
	80	3.0-3.7	—	0.33-0.27	—	—
	70	2.5-3.1	—	0.40-0.33	—	—
Clay tile, hollow						
1 cell deep ... 3 in.	—	—	1.25	—	0.80	0.21
1 cell deep ... 4 in.	—	—	0.90	—	1.11	—
2 cells deep ... 6 in.	—	—	0.66	—	1.52	—
2 cells deep ... 8 in.	—	—	0.54	—	1.85	—
2 cells deep ... 10 in.	—	—	0.45	—	2.22	—
3 cells deep ... 12 in.	—	—	0.40	—	2.50	—
Concrete blocks[l]						
Limestone aggregate						
8 in., 36 lb, 138 lb/ft³ concrete, 2 cores	—	—	—	—	—	—
Same with perlite filled cores	—	—	0.48	—	2.1	—
12 in., 55 lb, 138 lb/ft³ concrete, 2 cores	—	—	—	—	—	—
Same with perlite filled cores	—	—	0.27	—	3.7	—
Normal weight aggregate (sand and gravel)						
8 in., 33-36 lb, 126-136 lb/ft³ concrete, 2 or 3 cores	—	—	0.90-1.03	—	1.11-0.97	0.22
Same with perlite filled cores	—	—	0.50	—	2.0	—
Same with verm. filled cores	—	—	0.52-0.73	—	1.92-1.37	—
12 in., 50 lb, 125 lb/ft³ concrete, 2 cores	—	—	0.81	—	1.23	0.22
Medium weight aggregate (combinations of normal weight and lightweight aggregate)						
8 in., 26-29 lb, 97-112 lb/ft³ concrete, 2 or 3 cores	—	—	0.58-0.78	—	1.71-1.28	—
Same with perlite filled cores	—	—	0.27-0.44	—	3.7-2.3	—
Same with verm. filled cores	—	—	0.30	—	3.3	—
Same with molded EPS (beads) filled cores	—	—	0.32	—	3.2	—
Same with molded EPS inserts in cores	—	—	0.37	—	2.7	—
Lightweight aggregate (expanded shale, clay, slate or slag, pumice)						
6 in., 16-17 lb 85-87 lb/ft³ concrete, 2 or 3 cores	—	—	0.52-0.61	—	1.93-1.65	—
Same with perlite filled cores	—	—	0.24	—	4.2	—
Same with verm. filled cores	—	—	0.33	—	3.0	—
8 in., 19-22 lb, 72-86 lb/ft³ concrete,	—	—	0.32-0.54	—	3.2-1.90	0.21
Same with perlite filled cores	—	—	0.15-0.23	—	6.8-4.4	—
Same with verm. filled cores	—	—	0.19-0.26	—	5.3-3.9	—
Same with molded EPS (beads) filled cores	—	—	0.21	—	4.8	—
Same with UF foam filled cores	—	—	0.22	—	4.5	—
Same with molded EPS inserts in cores	—	—	0.29	—	3.5	—
12 in., 32-36 lb, 80-90 lb/ft³ concrete, 2 or 3 cores	—	—	0.38-0.44	—	2.6-2.3	—
Same with perlite filled cores	—	—	0.11-0.16	—	9.2-6.3	—
Same with verm. filled cores	—	—	0.17	—	5.8	—
Stone, lime, or sand						
Quartzitic and sandstone	180	72	—	0.01	—	—
	160	43	—	0.02	—	—
	140	24	—	0.04	—	—
	120	13	—	0.08	—	0.19
Calcitic, dolomitic, limestone, marble, and granite	180	30	—	0.03	—	—
	160	22	—	0.05	—	—
	140	16	—	0.06	—	—
	120	11	—	0.09	—	0.19
	100	8	—	0.13	—	—
Gypsum partition tile						
3 by 12 by 30 in., solid	—	—	0.79	—	1.26	0.19
3 by 12 by 30 in., 4 cells	—	—	0.74	—	1.35	—
4 by 12 by 30 in., 3 cells	—	—	0.60	—	1.67	—
Concretes						
Sand and gravel or stone aggregate concretes (concretes	150	10.0-20.0	—	0.10-0.05	—	—
with more than 50% quartz or quartzite sand have	140	9.0-18.0	—	0.11-0.06	—	0.19-0.24
conductivities in the higher end of the range)	130	7.0-13.0	—	0.14-0.08	—	—
Limestone concretes	140	11.1	—	0.09	—	—
	120	7.9	—	0.13	—	—
	100	5.5	—	0.18	—	—
Gypsum-fiber concrete (87.5% gypsum, 12.5% wood chips)	51	1.66	—	0.60	—	0.21
Cement/lime, mortar, and stucco	120	9.7	—	0.10	—	—
	100	6.7	—	0.15	—	—
	80	4.5	—	0.22	—	—
Lightweight aggregate concretes						
Expanded shale, clay, or slate; expanded slags; cinders;	120	6.4-9.1	—	0.16-0.11	—	—
pumice (with density up to 100 lb/ft³); and scoria	100	4.7-6.2	—	0.21-0.16	—	0.20
(sanded concretes have conductivities in the higher	80	3.3-4.1	—	0.30-0.24	—	0.20
end of the range)	60	2.1-2.5	—	0.48-0.40	—	—
	40	1.3	—	0.78	—	—

Table 4 Typical Thermal Properties of Common Building and Insulating Materials—Design Values[a] (*Concluded*)

Description	Density, lb/ft³	Conductivity[b] (*k*), Btu·in / h·ft²·°F	Conductance (*C*), Btu / h·ft²·°F	Resistance [c] (*R*) Per Inch Thickness (1/*k*), °F·ft²·h / Btu·in	Resistance [c] (*R*) For Thickness Listed (1/*C*), °F·ft²·h / Btu	Specific Heat, Btu / lb·°F
Perlite, vermiculite, and polystyrene beads	50	1.8–1.9	—	0.55–0.53	—	—
	40	1.4–1.5	—	0.71–0.67	—	0.15–0.23
	30	1.1	—	0.91	—	—
	20	0.8	—	1.25	—	—
Foam concretes	120	5.4	—	0.19	—	—
	100	4.1	—	0.24	—	—
	80	3.0	—	0.33	—	—
	70	2.5	—	0.40	—	—
Foam concretes and cellular concretes	60	2.1	—	0.48	—	—
	40	1.4	—	0.71	—	—
	20	0.8	—	1.25	—	—
SIDING MATERIALS (on flat surface)						
Shingles						
Asbestos-cement	120	—	4.75	—	0.21	—
Wood, 16 in., 7.5 exposure	—	—	1.15	—	0.87	0.31
Wood, double, 16-in., 12-in. exposure	—	—	0.84	—	1.19	0.28
Wood, plus insul. backer board, 0.3125 in.	—	—	0.71	—	1.40	0.31
Siding						
Asbestos-cement, 0.25 in., lapped	—	—	4.76	—	0.21	0.24
Asphalt roll siding	—	—	6.50	—	0.15	0.35
Asphalt insulating siding (0.5 in. bed.)	—	—	0.69	—	1.46	0.35
Hardboard siding, 0.4375 in.	—	—	1.49	—	0.67	0.28
Wood, drop, 1 by 8 in.	—	—	1.27	—	0.79	0.28
Wood, bevel, 0.5 by 8 in., lapped	—	—	1.23	—	0.81	0.28
Wood, bevel, 0.75 by 10 in., lapped	—	—	0.95	—	1.05	0.28
Wood, plywood, 0.375 in., lapped	—	—	1.59	—	0.59	0.29
Aluminum or Steel[m], over sheathing						
Hollow-backed	—	—	1.61	—	0.61	0.29
Insulating-board backed nominal 0.375 in.	—	—	0.55	—	1.82	0.32
Insulating-board backed nominal 0.375 in., foil backed	—	—	0.34	—	2.96	—
Architectural (soda-lime float) glass	158	6.9	—	—	—	0.21
WOODS (12% moisture content)[e,n]						
Hardwoods						0.39[o]
Oak	41.2–46.8	1.12–1.25	—	0.89–0.80	—	
Birch	42.6–45.4	1.16–1.22	—	0.87–0.82	—	
Maple	39.8–44.0	1.09–1.19	—	0.92–0.84	—	
Ash	38.4–41.9	1.06–1.14	—	0.94–0.88	—	
Softwoods						0.39[o]
Southern Pine	35.6–41.2	1.00–1.12	—	1.00–0.89	—	
Douglas Fir-Larch	33.5–36.3	0.95–1.01	—	1.06–0.99	—	
Southern Cypress	31.4–32.1	0.90–0.92	—	1.11–1.09	—	
Hem-Fir, Spruce-Pine-Fir	24.5–31.4	0.74–0.90	—	1.35–1.11	—	
West Coast Woods, Cedars	21.7–31.4	0.68–0.90	—	1.48–1.11	—	
California Redwood	24.5–28.0	0.74–0.82	—	1.35–1.22	—	

[a]Values are for a mean temperature of 75 °F. Representative values for dry materials are intended as design (not specification) values for materials in normal use. Thermal values of insulating materials may differ from design values depending on their in-situ properties (*e.g.*, density and moisture content, orientation, etc.) and variability experienced during manufacture. For properties of a particular product, use the value supplied by the manufacturer or by unbiased tests.

[b]To obtain thermal conductivities in Btu/h·ft·°F. divide the *k*-factor by 12 in./ft.

[c]Resistance values are the reciprocals of *C* before rounding off *C* to two decimal places.

[d]Lewis (1967).

[e]U.S. Department of Agriculture (1974).

[f]Does not include paper backing and facing, if any. Where insulation forms a boundary (reflective or otherwise) of an airspace, see Tables 2 and 3 for the insulating value of an airspace with the appropriate effective emittance and temperature conditions of the space.

[g]Conductivity varies with fiber diameter. (See Chapter 20, Factors Affecting Thermal Performance.) Batt, blanket, and loose-fill mineral fiber insulations are manufactured to achieve specified R-values, the most common of which are listed in the table. Due to differences in manufacturing processes and materials, the product thicknesses, densities, and thermal conductivities vary over considerable ranges for a specified R-value.

[h]This material is relatively new and data are based on limited testing.

[i]For additional information, see Society of Plastics Engineers (SPI) *Bulletin* U108. Values are for aged, unfaced board stock. For change in conductivity with age of expanded polyurethane/polyisocyanurate, see Chapter 20, Factors Affecting Thermal Performance.

[j]Values are for aged products with gas-impermeable facers on the two major surfaces. An aluminum foil facer of 0.001 in. thickness or greater is generally considered impermeable to gases. For change in conductivity with age of expanded polyisocyanurate, see Chapter 20, Factors Affecting Thermal Performance, and SPI *Bulletin* U108.

[k]Insulating values of acoustical tile vary, depending on density of the board and on type, size, and depth of perforations.

[l]Values for fully grouted block may be approximated using values for concrete with a similar unit weight.

[m]Values for metal siding applied over flat surfaces vary widely, depending on amount of ventilation of airspace beneath the siding; whether airspace is reflective of nonreflective; and on thickness, type, and application of insulating backing-board used. Values given are averages for use as design guides, and were obained from several guarded hot box tests (ASTM C236) or calibrated hot box (ASTM C976) on hollow-backed types and types made using backing-boards of wood fiber, foamed plastic, and glass fiber. Departures of ±50% or more from the values given may occur.

[n]See Adams (1971), MacLean (1941), and Wilkes (1979). The conductivity values listed are for heat transfer across the grain. The thermal conductivity of wood varies linearly with the density, and the density ranges listed are those normally found for the wood species given. If the density of the wood species is not known, use the mean conductivity value. For extrapolation to other moisture contents, the following empirical equation developed by Wilkes (1979) may be used:

$$k = 0.1791 + \frac{(1.874 \times 10^{-2} + 5.753 \times 10^{-4} M)\rho}{1 + 0.01M}$$

where ρ is density of the moist wood in lb/ft³, and M is the moisture content in percent.

[o]From Wilkes (1979), an empirical equation for the specific heat of moist wood at 75 °F is as follows:

$$c_p = \frac{(0.299 + 0.01M)}{(1 + 0.01M)} + \Delta c_p$$

where Δc_p accounts for the heat of sorption and is denoted by

$$\Delta c_p = M(1.921 \times 10^{-3} - 3.168 \times 10^{-5} M)$$

where M is the moisture content in percent by mass.

If the steel framing is accounted for using the parallel flow method, the C-factor of the wall is determined using Equation (5) from Chapter 20 as follows:

$$C_{av} = (0.92 \times 0.084) + (0.08 \times 0.629)$$
$$= 0.128 \text{ Btu/h} \cdot \text{ft}^2 \cdot °\text{F}$$
$$R_{T(av)} = 7.81 °\text{F} \cdot \text{ft}^2 \cdot \text{h/Btu}$$

If the steel framing is included using the isothermal planes method, the C-factor of the wall is determined using Equations (2) and (3) from Chapter 20 as follows:

$$R_{T(av)} = 0.45 + 1/[(0.92/11.00) + (0.08/0.69)] + 0.45$$
$$= 5.91 °\text{F} \cdot \text{ft}^2 \cdot \text{h/Btu}$$
$$C_{av} = 0.169 \text{ Btu/h} \cdot \text{ft}^2 \cdot °\text{F}$$

For this insulated steel frame wall, Farouk and Larson (1983) measured an average R-value of 6.61 °F · ft² · h/Btu.

In ASHRAE/IES *Standard* 90.1-1989, Energy Efficient Design of New Buildings except New Low-Rise Residential Buildings, one method given for determining the thermal resistance of wall assemblies containing metal framing involves using a parallel path correction factor F_c. The F_c values are included in Table 8C-2 of ASHRAE/IES *Standard* 90.1-1989. For 2 by 4 steel framing, 16 in. on center, $F_c = 0.50$. Using the correction factor method, an R-value of 6.40 · °F · ft² · h/Btu [0.45 + 11(0.50) + 0.45] is obtained for the wall described in Example 3.

Zone Method of Calculation

For structures with widely spaced metal members of substantial cross-sectional area, calculation by the isothermal planes method can result in thermal resistance values that are too low. For these constructions, the *zone method* can be used. This method involves two separate computations—one for a chosen limited portion, Zone A, containing the highly conductive element; the other for the remaining portion of simpler construction, Zone B. The two computations are then combined using the parallel flow method, and the average transmittance per unit overall area is calculated. The basic laws of heat transfer are applied by adding the area conductances *CA* of elements in parallel, and adding area resistances *R/A* of elements in series.

The surface shape of Zone A is determined by the metal element. For a metal beam (see Figure 5), the Zone A surface is a strip of width *W* that is centered on the beam. For a rod perpendicular to panel surfaces, it is a circle of diameter *W*. The value of *W* is calculated from Equation (1), which is empirical. The value of *d* should not be less than 0.5 in. for still air.

$$W = m + 2d \quad (1)$$

where

m = width or diameter of metal heat path terminal, in.
d = distance from panel surface to metal, in.

Generally, the value of *W* should be calculated using Equation (1) for each end of the metal heat path; the larger value, within the limits of the basic area, should be used as illustrated in Example 4.

Example 4. Calculate transmittance of the roof deck shown in Figure 5. Tee-bars at 24 in. OC support glass fiber form boards, gypsum concrete, and built-up roofing. Conductivities of components are: steel, 314.4 Btu · in/h · ft² · °F; gypsum concrete, 1.66 Btu · in/h · ft² · °F; and glass fiber form board, 0.25 Btu · in/h · ft² · °F. Conductance of built-up roofing is 3.00 Btu/h · ft² · °F.

Solution: The basic area is 2 ft² (24 in. by 12 in.) with a tee-bar (12 in. long) across the middle. This area is divided into Zones A and B.

Zone A is determined from Equation (1) as follows:

Top side $W = m + 2d = 0.625 + (2 \times 1.5) = 3.625$ in.
Bottom side $W = m + 2d = 2.0 + (2 \times 0.5) = 3.0$ in.

Using the larger value of *W*, the area of Zone A is $(12 \times 3.625)/144 = 0.302$ ft². The area of Zone B is $2.0 - 0.302 = 1.698$ ft².

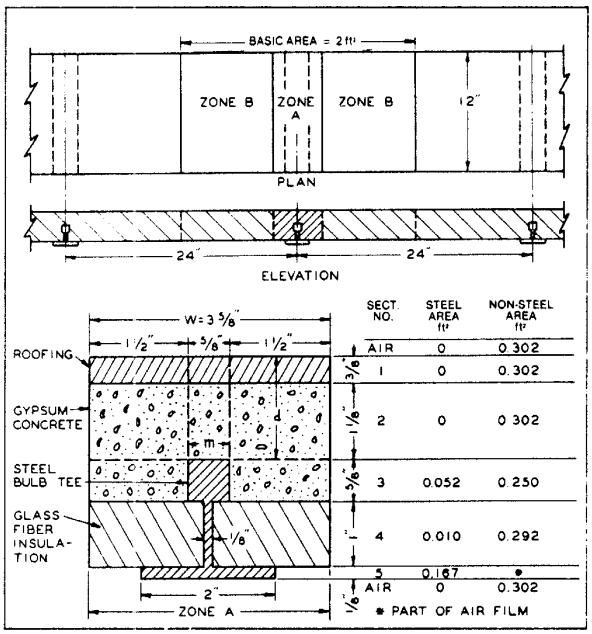

Fig. 5 Gypsum Roof Deck on Bulb Tees (Example 4)

To determine area transmittance for Zone A, divide the structure within the zone into five sections parallel to the top and bottom surfaces (Figure 5). The area conductance *CA* of each section is calculated by adding the area conductances of its metal and nonmetal paths. Area conductances of the sections are converted to area resistances *R/A* and added to obtain the total resistance of Zone A.

Section	Area × Conductance	= *CA*	$\frac{1}{CA} = \frac{R}{A}$
Air (outside, 15 mph)	0.302 × 6.00	1.81	0.55
No. 1, Roofing	0.302 × 3.00	0.906	1.10
No. 2, Gypsum concrete	0.302 × 1.66/1.125	0.446	2.24
No. 3, Steel	0.052 × 314.4/0.625	26.2	0.04
No. 3, Gypsum concrete	0.250 × 1.66/0.625	0.664	
No. 4, Steel	0.010 × 314.4/1.00	3.14	0.31
No. 4, Glass fiberboard	0.292 × 0.25/1.00	0.073	
No. 5, Steel	0.167 × 314.4/0.125	420.0	0.002
Air (inside)	0.302 × 1.63	0.492	2.03
		Total *R/A* =	6.27

Area transmittance of Zone A = $1/(R/A) = 1/6.27 = 0.159$.

For Zone B, the unit resistances are added and then converted to area transmittance, as shown in the following table.

Section	Resistance, *R*
Air (outside, 15 mph)	1/6.00 = 0.17
Roofing	1/3.00 = 0.33
Gypsum concrete	1.75/1.66 = 1.05
Glass fiberboard	1.00/0.25 = 4.00
Air (inside)	1/1.63 = 0.61
Total resistance	= 6.16

Since unit transmittance = $1/R = 0.162$, the total area transmittance *UA* is calculated as follows:

Zone B = 1.698 × 0.162 = 0.275
Zone A = 0.159
Total area transmittance of basic area = 0.434
Transmittance per ft² = 0.434/2.0 = 0.217
Resistance per ft² = 4.61

Overall R-values of 4.57 and 4.85 °F · ft² · h/Btu have been measured in two guarded hot box tests of a similar construction.

When the steel member represents a relatively large proportion of the total heat flow path, as in Example 4, detailed calculations of resistance in sections 3, 4, and 5 of Zone A are unnecessary; if only the steel member is considered, the final result of Example 4 is the same. However, if the heat flow path represented by the steel member is small, as for a tie rod, detailed calculations for sections 3, 4, and 5 are necessary. A panel with an internal metallic structure and bonded on one or both sides to a metal skin or covering presents special problems of lateral heat flow not covered in the zone method.

Ceilings and Roofs

The overall R-value for ceilings of wood frame flat roofs can be calculated using Equations (1) through (5) from Chapter 20. Properties of the materials are found in Tables 1, 2, 3, and 4. The fraction of framing is assumed to be 0.10 for joists at 16 in. OC and 0.07 for joists at 24 in. OC. The calculation procedure is similar to that shown in Example 1. Note that if the ceiling contains plane air spaces (see Table 2), the resistance depends on the direction of heat flow, *i.e.*, whether the calculation is for a winter (heat flow up) or summer (heat flow down) condition.

For ceilings of pitched roofs under winter conditions, calculate the R-value of the ceiling using the procedure for flat roofs. The heat loss from these ceilings can be obtained using a calculated attic temperature (see Chapter 25). Table 5 can be used to determine the effective resistance of the attic space under summer conditions for varying conditions of ventilation air temperature, airflow direction and rates, ceiling resistance, roof or sol-air temperatures, and surface emittances (Joy 1958).

The R-value is the total resistance obtained by adding the ceiling and effective attic resistances. The applicable temperature difference is that difference between room air and sol-air temperatures or between room air and roof temperatures (see Table 5, footnote f). Table 5 can be used for pitched and flat residential roofs over attic spaces. When an attic has a floor, the ceiling resistance should account for the complete ceiling-floor construction.

Windows and Doors

The U-factors given in Table 5 of Chapter 27 are for vertical glazing (*e.g.*, windows, glass in exterior doors, glass doors, and skylights). The values were computed using procedures outlined in Chapter 27. The U-factors in Table 6 are for exterior wood and steel doors. The values given for wood doors were calculated, and those for steel doors were taken from hot box tests (Sabine *et al.* 1975, Yellott 1965) or from manufacturers' test reports. An outdoor surface conductance of 6.0 Btu/h·ft²·°F was used, and the indoor surface conductance was taken as 1.46 Btu/h·ft²·°F for vertical surfaces with horizontal heat flow. All values given are for exterior doors without glazing. If an exterior door contains glazing, the glazing should be analyzed as a window, as illustrated in Example 5.

Example 5. Determine the U-factor of a fixed wood frame residential window containing double insulating glass with 0.5-in. air space and metal spacer for winter conditions.

Solution: From Chapter 27, Table 5, the U-factor of the center of the glass portion only is 0.49 Btu/h·ft²·°F for glazing 1D6, double glazing, 0.5-in. air space. The wood frame of the window must also be

Table 5 Effective Thermal Resistance of Ventilated Attics[a] (Summer Condition)

		No Ventilation[b]		Natural Ventilation		Power Ventilation[c]					
		Ventilation Rate, cfm/ft²									
		0		0.1[d]		0.5		1.0		1.5	
		Ceiling Resistance R^e, °F·ft²·/Btu									
Ventilation Air Temperature, °F	Sol-Air[f] Temperature, °F	10	20	10	20	10	20	10	20	10	20
PART A. NONREFLECTIVE SURFACES											
80	120	1.9	1.9	2.8	3.4	6.3	9.3	9.6	16	11	20
	140	1.9	1.9	2.8	3.5	6.5	10	9.8	17	12	21
	160	1.9	1.9	2.8	3.6	6.7	11	10	18	13	22
90	120	1.9	1.9	2.5	2.8	4.6	6.7	6.1	10	6.9	13
	140	1.9	1.9	2.6	3.1	5.2	7.9	7.6	12	8.6	15
	160	1.9	1.9	2.7	3.4	5.8	9.0	8.5	14	10	17
100	120	1.9	1.9	2.2	2.3	3.3	4.4	4.0	6.0	4.1	6.9
	140	1.9	1.9	2.4	2.7	4.2	6.1	5.8	8.7	6.5	10
	160	1.9	1.9	2.6	3.2	5.0	7.6	7.2	11	8.3	13
PART B. REFLECTIVE SURFACES[g]											
80	120	6.5	6.5	8.1	8.8	13	17	17	25	19	30
	140	6.5	6.5	8.2	9.0	14	18	18	26	20	31
	160	6.5	6.5	8.3	9.2	15	18	19	27	21	32
90	120	6.5	6.5	7.5	8.0	10	13	12	17	13	19
	140	6.5	6.5	7.7	8.3	12	15	14	20	16	22
	160	6.5	6.5	7.9	8.6	13	16	16	22	18	25
100	120	6.5	6.5	7.0	7.4	8.0	10	8.5	12	8.8	12
	140	6.5	6.5	7.3	7.8	10	12	11	15	12	16
	160	6.5	6.5	7.6	8.2	11	14	13	18	15	20

[a] Although the term effective resistance is commonly used when there is attic ventilation, this table includes values for situations with no ventilation. The effective resistance of the attic added to the resistance ($1/U$) of the ceiling yields the effective resistance of this combination based on sol-air (see Chapter 26) and room temperatures. These values apply to wood frame construction with a roof deck and roofing that has a conductance of 1.0 Btu/h·ft²·°F.

[b] This condition cannot be achieved in the field unless extreme measures are taken to tightly seal the attic.

[c] Based on air discharging outward from attic.

[d] When attic ventilation meets the requirements stated in Chapter 23, 0.1 cfm/ft² is assumed as the natural summer ventilation rate.

[e] When determining ceiling resistance, do not add the effect of a reflective surface facing the attic, as it is accounted for in Table 5, Part B.

[f] Roof surface temperature rather than sol-air temperature (see Chapter 26) can be used if 0.25 is subtracted from the attic resistance shown.

[g] Surfaces with effective emittance ϵ_{eff} = 0.05 between ceiling joists facing attic space.

Table 6 Transmission Coefficients U for Wood and Steel Doors, Btu/h·ft²·°F

Nominal Door Thickness, in.	Description	No Storm Door	Wood Storm Door[c]	Metal Storm Door[d]
Wood Doors[a,b]				
1-3/8	Panel door with 7/16-in. panels[e]	0.57	0.33	0.37
1-3/8	Hollow core flush door	0.47	0.30	0.32
1-3/8	Solid core flush door	0.39	0.26	0.28
1-3/4	Panel door with 7/16-in. panels[e]	0.54	0.32	0.36
1-3/4	Hollow core flush door	0.46	0.29	0.32
1-3/4	Panel door with 1-1/8-in. panels[e]	0.39	0.26	0.28
1-3/4	Solid core flush door	0.40	—	0.26
2-1/4	Solid core flush door	0.27	0.20	0.21
Steel Doors[b]				
1-3/4	Fiberglass or mineral wool core with steel stiffeners, no thermal break[f]	0.60	—	—
1-3/4	Paper honeycomb core without thermal break[f]	0.56	—	—
1-3/4	Solid urethane foam core without thermal break[a]	0.40	—	—
1-3/4	Solid fire rated mineral fiberboard core without thermal break[f]	0.38	—	—
1-3/4	Polystyrene core without thermal break (18 gage commercial steel)[f]	0.35	—	—
1-3/4	Polyurethane core without thermal break (18 gage commercial steel)[f]	0.29	—	—
1-3/4	Polyurethane core without thermal break (24 gage residential steel)[f]	0.29	—	—
1-3/4	Polyurethane core with thermal break and wood perimeter (24 gage residential steel)[f]	0.20	—	—
1-3/4	Solid urethane foam core with thermal break[a]	0.20	—	0.16

Note: All U-factors for exterior doors in this table are for doors with no glazing, except for the storm doors which are in addition to the main exterior door. Any glazing area in exterior doors should be included with the appropriate glass type and analyzed as a window (see Chapter 27). Interpolation and moderate extrapolation are permitted for door thicknesses other than those specified.

[a] Values are based on a nominal 32 by 80 in. door size with no glazing.

[b] Outside air conditions: 15 mph wind speed, 0°F air temperature; inside air conditions: natural convection, 70°F air temperature.

[c] Values for wood storm door are for approximately 50% glass area.

[d] Values for metal storm door are for any percent glass area.

[e] 55% panel area.

[f] ASTM C 236 hotbox data on a nominal 3 by 7 ft door size with no glazing.

considered when determining the window U-factor. Referring to Table 5 in Chapter 27, for a fixed wood frame window with a 0.5-in. air space and metal spacer, the U-factor is given as 0.51 Btu/h·ft²·°F.

All R-values are approximate, since a significant portion of the resistance of a window or door is contained in the air film resistances, and some parameters that may have important effects are not considered. For example, the listed U-factors assume the surface temperatures of surrounding bodies are equal to the ambient air temperature. However, the indoor surface of a window or door in an actual installation may be exposed to nearby radiating surfaces, such as radiant heating panels, or opposite walls with much higher or lower temperatures than the indoor air. Air movement across the indoor surface of a window or door, such as that caused by nearby heating and cooling outlet grilles, increases the U-factor; and air movement (wind) across the outdoor surface of a window or door also increases the U-factor.

U_o Concept

In Section 4 of ASHRAE *Standard* 90A-1980, Energy Conservation in New Building Design, requirements are stated in terms of U_o, where U_o is the combined thermal transmittance of the respective areas of gross exterior wall, roof or ceiling or both, and floor assemblies. The U_o equation for a wall is as follows:

$$U_o = (U_{wall} A_{wall} + U_{window} A_{window} + U_{door} A_{door})/A_o \quad (2)$$

where

U_o = average thermal transmittance of gross wall area
A_o = gross area of exterior walls
U_{wall} = thermal transmittance of all elements of opaque wall area
A_{wall} = opaque wall area
U_{window} = thermal transmittance of window area (including frame)
A_{window} = window area (including frame)
U_{door} = thermal transmittance of door area
A_{door} = door area

Where more than one type of wall, window, or door is used, the UA term for that exposure should be expanded into its subelements, as shown in Equation (3).

$$\begin{aligned} U_o A_o = {} & U_{wall\,1} A_{wall\,1} + U_{wall\,2} A_{wall\,2} + \cdots + U_{wall\,m} A_{wall\,m} \\ & + U_{window\,1} A_{window\,1} + U_{window\,2} A_{window\,2} + \cdots \\ & + U_{window\,n} A_{window\,n} + U_{door\,1} A_{door\,1} \\ & + U_{door\,2} A_{door\,2} + \cdots + U_{door\,o} A_{door\,o} \end{aligned} \quad (3)$$

Example 6. Calculate U_o for a wall 30 ft by 8 ft, constructed as in Example 1A. The wall contains one window 60 in. by 34 in. and a second window 36 in. by 30 in. Both windows are constructed as in Example 5. The wall also contains a 1.75-in. solid core flush door with a metal storm door 34 in. by 80 in. (U = 0.26 Btu/h·ft²·°F from Table 6).

Solution: The U-factors for the wall and windows were obtained in Examples 1A and 5, respectively. The areas of the different components are:

$$A_{window} = [(60 \times 34) + (36 \times 30)]/144 = 21.7 \text{ ft}^2$$
$$A_{door} = (34 \times 80)/144 = 18.9 \text{ ft}^2$$
$$A_{wall} = (30 \times 8) - (21.7 + 18.9) = 199.4 \text{ ft}^2$$

Therefore, the combined thermal transmittance for the wall is:

$$U_o = \frac{(0.063 \times 199.4) + (0.51 \times 21.7) + (0.26 \times 18.9)}{(30 \times 8)}$$
$$= 0.119 \text{ Btu/h·ft}^2\text{·°F}$$

Slab-on-Grade and Below-Grade Construction

Heat transfer through basement walls and floors to the ground depends on the following factors: (1) the difference between the air temperature within the room and that of the ground and outside air, (2) the material of the walls or floor, and (3) the thermal

conductivity of the surrounding earth. The latter varies with local conditions and is usually unknown. Because of the great thermal inertia of the surrounding soil, ground temperature varies with depth, and there is a substantial time lag between changes in outdoor air temperatures and corresponding changes in ground temperatures. As a result, ground-coupled heat transfer is less amenable to steady-state representation than above-grade building elements. However, several simplified procedures for estimating ground-coupled heat transfer have been developed. These fall into two principal categories: (1) those that reduce the ground heat transfer problem to a closed form solution, and (2) those that use simple regression equations developed from statistically reduced multidimensional transient analyses.

Closed form solutions, including the ASHRAE arc-length procedure discussed in Chapter 25 by Latta and Boileau (1969), generally reduce the problem to one-dimensional, steady-state heat transfer. These procedures use simple, "effective" U-factors or ground temperatures or both. Methods differ in the various parameters averaged or manipulated to obtain these effective values. Closed form solutions provide acceptable results in climates that have a single dominant season, because the dominant season persists long enough to permit a reasonable approximation of steady-state conditions at shallow depths. The large errors (percentage) that are likely during transition seasons should not seriously affect building design decisions, since these heat flows are relatively insignificant when compared with those of the principal season.

The ASHRAE arc-length procedure is a reliable method for wall heat losses in cold winter climates. Chapter 25 discusses a slab-on-grade floor model developed by one study. Although both procedures give results comparable to transient computer solutions for cold climates, their results for warmer U.S. climates differ substantially.

Research conducted by Hougten *et al.* (1942) and Dill *et al.* (1945) indicates a heat flow of approximately 2.0 Btu/h · ft² through an uninsulated concrete basement floor with a temperature difference of 20 °F between the basement floor and the air 6 in. above it. A U-factor of 0.10 Btu/h · ft² · °F is sometimes used for concrete basement floors on the ground. For basement walls below grade, the temperature difference for winter design conditions is greater than for the floor. Test results indicate that at the midheight of the below-grade portion of the basement wall, the unit area heat loss is approximately twice that of the floor.

For concrete slab floors in contact with the ground at grade level, tests indicate that for small floor areas (equal to that of a 25 by 25 ft house) the heat loss can be calculated as proportional to the length of exposed edge rather than total area. This amounts to 0.81 Btu/h per linear foot of exposed edge per °F difference between the indoor air temperature and the average outdoor air temperature. This value can be reduced appreciably by installing insulation under the ground slab and along the edge between the floor and abutting walls. In most calculations, if the perimeter loss is calculated accurately, no other floor losses need to be considered. Chapter 25 contains data for load calculations and heat loss values for below-grade walls and floors at different depths.

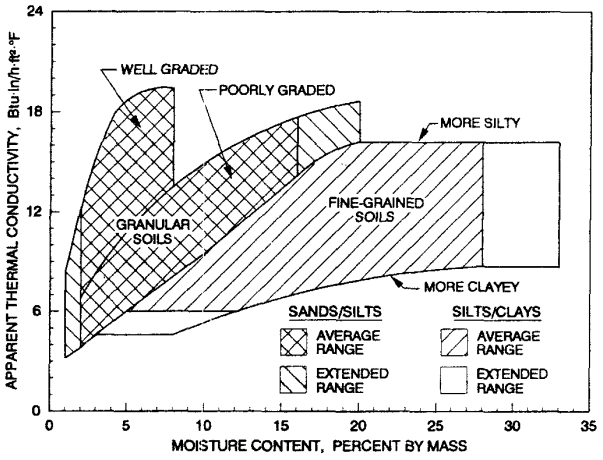

Fig. 6 Trends of Apparent Thermal Conductivity of Moist Soils

The second category of simplified procedures uses transient two-dimensional computer models to generate the ground heat transfer data that are then reduced to compact form by regression analysis (see Mitalas 1982 and 1983, Shipp 1983). These are the most accurate procedures available, but the database is very expensive to generate. In addition, these methods are limited to the range of climates and constructions specifically examined. Extrapolating beyond the outer bounds of the regression surfaces can produce significant errors.

Apparent Thermal Conductivity of Soil

Effective or apparent soil thermal conductivity is difficult to estimate precisely and may change substantially in the same soil at different times due to changed moisture conditions and the presence of freezing temperatures in the soil. Figure 6 shows the typical apparent soil thermal conductivity as a function of moisture content for different general types of soil. The figure is based on data presented in Salomone and Marlowe (1989) using envelopes of thermal behavior coupled with field moisture content ranges for different soil types. In Figure 6, the term well-graded applies to granular soils with good representation of all particle sizes from largest to smallest. The term poorly graded refers to granular soils with either a uniform gradation, in which most particles are about the same size, or a skip (or gap) gradation, in which particles of one or more intermediate sizes are not present.

Although thermal conductivity varies greatly over the complete range of possible moisture contents for a soil, this range can be narrowed if it is assumed that the moisture contents of most field soils lie between the "wilting point" of the soil (*i.e.*, the moisture content of a soil below which a plant cannot alleviate its wilting symptoms) and the "field capacity" of the soil (*i.e.*, the moisture

Table 7 Typical Apparent Thermal Conductivity Values for Soils, Btu · in/h · ft² · °F

	Normal Range	Recommended Values for Design[a] Low[b]	High[c]
Sands	4.2 to 17.4	5.4	15.6
Silts	6 to 17.4	11.4	15.6
Clays	6 to 11.4	7.8	10.8
Loams	6 to 17.4	6.6	15.6

[a]Reasonable values for use when no site- or soil-specific data are available.
[b]Moderately conservative values for minimum heat loss through soil (*e.g.*, use in soil heat exchanger or earth-contact cooling calculations). Values are from Salomone and Marlowe (1989).
[c]Moderately conservative values for maximum heat loss through soil (*e.g.*, use in peak winter heat loss calculations). Values are from Salomone and Marlowe (1989).

Table 8 Typical Apparent Thermal Conductivity Values for Rocks, Btu · in/h · ft² · °F

	Normal Range
Pumice, tuff, obsidian	3.6 to 15.6
Basalt	3.6 to 18.0
Shale	6 to 27.6
Granite	12 to 30
Limestone, dolomite, marble	8.4 to 30
Quartzose sandstone	9.6 to 54

Table 9 Typical Water Vapor Permeance and Permeability Values for Common Building Materials[a]

Material	Thickness, in.	Permeance, Perm	Resistance[b], Rep	Permeability, Perm-in.	Resistance/in.[b], Rep/in.
Construction Materials					
Concrete (1:2:4 mix)				3.2	0.31
Brick masonry	4	0.8[f]	1.3		
Concrete block (cored, limestone aggregate)	8	2.4[f]	0.4		
Tile masonry, glazed	4	0.12[f]	8.3		
Asbestos cement board	0.12	4-8[d]	0.1-0.2		
With oil-base finishes		0.3-0.5[d]	2-3		
Plaster on metal lath	0.75	15[f]	0.067		
Plaster on wood lath		11[e]	0.091		
Plaster on plain gypsum lath (with studs)		20[f]	0.050		
Gypsum wall board (plain)	0.375	50[f]	0.020		
Gypsum sheathing (asphalt impregnated)	0.5			20[d]	0.050
Structural insulating board (sheathing quality)				20-50[f]	0.050-0.020
Structural insulating board (interior, uncoated)	0.5	50-90[f]	0.020-0.011		
Hardboard (standard)	0.125	11[f]	0.091		
Hardboard (tempered)	0.125	5[f]	0.2		
Built-up roofing (hot mopped)		0.0			
Wood, sugar pine				0.4-5.4[b]	2.5-0.19
Plywood (douglas fir, exterior glue)	0.25	0.7[f]	1.4		
Plywood (douglas fir, interior glue)	0.25	1.9[f]	0.53		
Acrylic, glass fiber reinforced sheet	0.056	0.12[d]	8.3		
Polyester, glass fiber reinforced sheet	0.048	0.05[d]	20		
Thermal Insulations					
Air (still)				120[f]	0.0083
Cellular glass				0.0[d]	∞
Corkboard				2.1-2.6[d]	0.48-0.38
				9.5[e]	0.11
Mineral wool (unprotected)				116[e]	0.0086
Expanded polyurethane (R-11 blown) board stock				0.4-1.6[d]	2.5-0.62
Expanded polystyrene—extruded				1.2[d]	0.83
Expanded polystyrene—bead				2.0-5.8[d]	0.50-0.17
Phenolic foam (covering removed)				26	0.038
Unicellular synthetic flexible rubber foam				0.02-0.15[d]	50-6.7
Plastic and Metal Foils and Films[c]					
Aluminum foil	0.001	0.0[d]	∞		
Aluminum foil	0.00035	0.05[d]	20		
Polyethylene	0.002	0.16[d]	6.3		3100
Polyethylene	0.004	0.08[d]	12.5		3100
Polyethylene	0.006	0.06[d]	17		3100
Polyethylene	0.008	0.04[d]	25		3100
Polyethylene	0.010	0.03[d]	33		3100
Polyvinylchloride, unplasticized	0.002	0.68[d]	1.5		
Polyvinylchloride, plasticized	0.004	0.8-1.4[d]	1.3-0.72		
Polyester	0.001	0.73[d]	1.4		
Polyester	0.0032	0.23[d]	4.3		
Polyester	0.0076	0.08[d]	12.5		
Cellulose acetate	0.01	4.6[d]	0.2		
Cellulose acetate	0.125	0.32[d]	3.1		

content of a soil that has been thoroughly wetted and then drained until the drainage rate has become negligibly small). After a prolonged dry spell, the moisture will be near the wilting point, and after a rainy period, the soil will have a moisture content near its field capacity. The moisture contents at these limits have been studied by many agricultural researchers, and data for different types of soil are given by Salomone and Marlowe (1989) and Kersten (1949). The shaded areas on Figure 6 approximate (1) the full range of moisture contents for different soil types and (2) a range between average values of each limit.

Table 7 gives a summary of design values for thermal conductivities of the basic soil classes. Table 8 gives ranges of thermal conductivity for some basic classes of rock. The value chosen depends on whether heat transfer is being calculated for minimum heat loss through the soil, as in a ground heat exchange system, or a maximum value, as in peak winter heat loss calculations for a basement. Hence, a high and a low value are given for each soil class.

As heat flows through the soil, the moisture tends to move away from the source of heat. This moisture migration provides initial mass transport of heat, but it also dries the soil adjacent to the heat source, hence lowering the apparent thermal conductivity in that zone of soil.

The following trends are typical in a soil when other factors are held constant:

1. k increases with moisture content
2. k increases with increasing dry density of a soil
3. k decreases with increasing organic content of a soil
4. k tends to decrease for soils with uniform gradations and rounded soil grains (because the grain-to-grain contacts are reduced)

Table 9 Typical Water Vapor Permeance and Permeability Values for Common Building Materials[a] (*Concluded*)

Material	Weight, lb/100 ft²	Permeance, Perms			Resistance[h] Rep		
		Dry-Cup	Wet-Cup	Other	Dry-Cup	Wet-Cup	Other
Building Paper, Felts, Roofing Papers[g]							
Duplex sheet, asphalt laminated, aluminum foil one side	8.6	0.002	0.176		500	5.8	
Saturated and coated roll roofing	65	0.05	0.24		20	4.2	
Kraft paper and asphalt laminated, reinforced 30-120-30	6.8	0.3	1.8		3.3	0.55	
Blanket thermal insulation backup paper, asphalt coated	6.2	0.4	0.6–4.2		2.5	1.7–0.24	
Asphalt-saturated and coated vapor retarder paper	8.6	0.2–0.3	0.6		5.0–3.3	1.7	
Asphalt-saturated, but not coated, sheathing paper	4.4	3.3	20.2		0.3	0.05	
15-lb asphalt felt	14	1.0	5.6		1.0	0.18	
15-lb tar felt	14	4.0	18.2		0.25	0.055	
Single-kraft, double	3.2	31	42		0.032	0.024	
Liquid-Applied Coating Materials	**Thickness, in.**						
Commercial latex paints (dry film thickness)[i]							
Vapor retarder paint	0.0031			0.45			2.22
Primer-sealer	0.0012			6.28			0.16
Vinyl acetate/acrylic primer	0.002			7.42			0.13
Vinyl-acrylic primer	0.0016			8.62			0.12
Semi-gloss vinyl-acrylic enamel	0.0024			6.61			0.15
Exterior acrylic house and trim	0.0017			5.47			0.18
Paint–2 coats							
Asphalt paint on plywood			0.4			2.5	
Aluminum varnish on wood		0.3–0.5			3.3–2.0		
Enamels on smooth plaster				0.5–1.5			2.0–0.66
Primers and sealers on interior insulation board				0.9–2.1			1.1–0.48
Various primers plus 1 coat flat oil paint on plaster				1.6–3.0			0.63–0.33
Flat paint on interior insulation board				4			0.25
Water emulsion on interior insulation board				30–85			0.03–0.012
	Weight, oz/ft²						
Paint–3 coats							
Exterior paint, white lead and oil on wood siding		0.3–1.0			3.3–1.0		
Exterior paint, white lead-zinc oxide and oil on wood		0.9			1.1		
Styrene-butadiene latex coating	2	11			0.09		
Polyvinyl acetate latex coating	4	5.5			0.18		
Chlorosuifonated polyethylene mastic	3.5	1.7			0.59		
	7.0	0.06			16		
Asphalt cutback mastic, 1/16 in., dry		0.14			7.2		
3/16 in., dry		0.0			—		
Hot melt asphalt	2	0.5			2		
	3.5	0.1			10		

[a]This table permits comparisons of materials; but in the selection of vapor retarder materials, exact values for permeance or permeability should be obtained from the manufacturer or from laboratory tests. The values shown indicate variations among mean values for materials that are similar but of different density, orientation, lot, or source. The values should not be used as design or specification data. Values from dry-cup and wet-cup methods were usually obtained from investigations using ASTM E96 and C355; values shown under others were obtained by two-temperature, special cell, and air velocity methods. Permeance, resistance, permeability, and resistance per unit thickness values are given in the following units:

Permeance	Perm	= gr/h · ft² · in. Hg
Resistance	Rep	= in. Hg · ft² · h/gr
Permeability	Perm-in.	= gr/h · ft² · (in. Hg/in.)
Resistance/unit thickness	Rep/in.	= (in. Hg · ft² · h/gr)/in.

[b]Depending on construction and direction of vapor flow.
[c]Usually installed as vapor retarders, although sometimes used as exterior finish and elsewhere near cold side, where special considerations are then required for warm side barrier effectiveness.
[d]Dry-cup method.
[e]Wet-cup method.
[f]Other than dry- or wet-cup method.
[g]Low permeance sheets used as vapor retarders. High permeance used elsewhere in construction.
[h]Resistance and resistance/in. values have been calculated as the reciprocal of the permeance and permeability values.
[i]Cast at 10 mils wet film thickness.

5. *k* of a frozen soil may be higher or lower than that of the same unfrozen soil (because the conductivity of ice is higher than that of water but lower than that of the typical soil grains). Differences in *k* below moisture contents of 7 to 8% are quite small. At approximately 15% moisture content, differences in k-factors may vary up to 30% from unfrozen values.

When calculating annual energy use, values that represent typical site conditions as they vary during the year should be chosen. In climates where ground freezing is significant, accurate heat transfer simulations should include the effect of the latent heat of fusion of water. The energy released during this phase change significantly retards the progress of the frost front in moist soils.

Water Vapor Transmission Data for Building Components

Table 9 gives typical water vapor permeance and permeability values for common building materials. These values can be used to calculate water vapor flow through building components and assemblies using Equations (14) through (17) in Chapter 20.

Table 10 Typical Thermal Conductivity k for Industrial Insulations at Various Mean Temperatures—Design Values[a]

Material	Max. Temp.,[b] °F	Typical Density, lb/ft³	Typical Conductivity k in Btu·in/h·ft²·°F at Mean Temp., °F													
			−100	−75	−50	−25	0	25	50	75	100	200	300	500	700	900
BLANKETS AND FELTS																
ALUMINOSILICATE FIBER																
7 to 10 μm diameter fiber	1800	4								0.24		0.32		0.54	0.99	1.03
	2000	6-8								0.25		0.30		0.48	0.78	0.95
3 μm diameter fiber	2200	4								0.22		0.29		0.45	0.59	0.74
MINERAL FIBER (Rock, slag, or glass)																
Blanket, metal reinforced	1200	6-12									0.26	0.32	0.39	0.54		
	1000	2.5-6									0.24	0.31	0.40	0.61		
Blanket, flexible, fine-fiber	350	<0.75				0.25	0.26	0.28	0.30	0.33	0.36	0.53				
organic bonded		0.75				0.24	0.25	0.27	0.29	0.32	0.34	0.48				
		1.0				0.23	0.24	0.25	0.27	0.29	0.32	0.43				
		1.5				0.21	0.22	0.23	0.25	0.27	0.28	0.37				
		2.0				0.20	0.21	0.22	0.23	0.25	0.26	0.33				
		3.0				0.19	0.20	0.21	0.22	0.23	0.24	0.31				
Blanket, flexible, textile fiber,	350	0.65				0.27	0.28	0.29	0.30	0.31	0.32	0.50	0.68			
organic bonded		0.75				0.26	0.27	0.28	0.29	0.31	0.32	0.48	0.66			
		1.0				0.24	0.25	0.26	0.27	0.29	0.31	0.45	0.60			
		1.5				0.22	0.23	0.24	0.25	0.27	0.29	0.39	0.51			
		3.0				0.20	0.21	0.22	0.23	0.24	0.25	0.32	0.41			
Felt, semirigid organic bonded	400	3-8						0.24	0.25	0.26	0.27	0.35	0.44			
	850	3	0.16	0.17	0.18	0.19	0.20	0.21	0.22	0.23	0.24	0.35	0.55			
Laminated and felted without binder	1200	7.5											0.35	0.45	0.60	
BLOCKS, BOARDS, AND PIPE INSULATION																
MAGNESIA	600	11-12									0.35	0.38	0.42			
85% CALCIUM SILICATE	1200	11-15									0.38	0.41	0.44	0.52	0.62	0.72
	1800	12-15												0.63	0.74	0.95
CELLULAR GLASS	900	7.8-8.2	0.24	0.25	0.26	0.28	0.29	0.30	0.32	0.33	0.34	0.41	0.49	0.70	1.01	
DIATOMACEOUS SILICA	1600	21-22												0.64	0.68	0.72
	1900	23-25												0.70	0.75	0.80
MINERAL FIBER (Glass)																
Organic bonded, block and boards	400	3-10	0.16	0.17	0.18	0.19	0.20	0.22	0.24	0.25	0.26	0.33	0.40			
Nonpunking binder	1000	3-10									0.26	0.31	0.38	0.52		
Pipe insulation, slag, or glass	350	3-4					0.20	0.21	0.22	0.23	0.24	0.29				
	500	3-10					0.20	0.22	0.24	0.25	0.26	0.33	0.40			
Inorganic bonded block	1000	10-15									0.33	0.38	0.45	0.55		
	1800	15-24									0.32	0.37	0.42	0.52	0.62	0.74
Pipe insulation, slag, or glass	1000	10-15									0.33	0.38	0.45	0.55		
Resin binder		15	0.23	0.24	0.25	0.26	0.28	0.29								
RIGID POLYSTYRENE																
Extruded (CFC-12 exp.)																
(smooth skin surface)	165	1.8-3.5	0.16	0.16	0.17	0.16	0.17	0.18	0.19	0.20						
Molded beads	165	1	0.17	0.19	0.20	0.21	0.22	0.24	0.25	0.26	0.28					
		1.25	0.17	0.18	0.19	0.20	0.22	0.23	0.24	0.25	0.27					
		1.5	0.16	0.17	0.19	0.20	0.21	0.22	0.23	0.24	0.26					
		1.75	0.16	0.17	0.18	0.19	0.20	0.22	0.23	0.24	0.25					
		2.0	0.15	0.16	0.18	0.19	0.20	0.21	0.22	0.23	0.24					
RIGID POLYURETHANE/POLYISOCYANURATE[c,d]																
Unfaced (CFC-11 exp.)	210	1.5-2.5	0.16	0.17	0.18	0.18	0.18	0.17	0.16	0.16	0.17					
RIGID POLYISOCYANURATE[e]																
Gas-impermeable facers (CFC-11 exp.)	250	2.0						0.12	0.13	0.14	0.15					
RIGID PHENOLIC																
Closed cell (CFC-11, CFC-113 exp.)		3.0						0.11	0.115	0.12	0.125					
RUBBER, Rigid foamed	150	4.5						0.20	0.21	0.22	0.23					
VEGETABLE AND ANIMAL FIBER																
Wool felt (pipe insulation)	180	20						0.28	0.30	0.31	0.33					
INSULATING CEMENTS																
MINERAL FIBER (Rock, slag, or glass)																
With colloidal clay binder	1800	24-30									0.49	0.55	0.61	0.73	0.85	
With hydraulic setting binder	1200	30-40									0.75	0.80	0.85	0.95		
LOOSE FILL																
Cellulose insulation (milled pulverized																
paper or wood pulp)		2.5-3							0.26	0.27	0.29					
Mineral fiber, slag, rock, or glass		2-5				0.19	0.21	0.23	0.25	0.26	0.28	0.31				
Perlite (expanded)		3-5	0.22	0.24	0.25	0.27	0.28	0.30	0.31	0.33	0.35					
Silica aerogel		7.6				0.13	0.14	0.15	0.15	0.16	0.17	0.18				
Vermiculite (expanded)		7-8.2				0.39	0.40	0.42	0.44	0.45	0.47	0.49				
		4-6				0.34	0.35	0.38	0.40	0.42	0.44	0.46				

[a] Representative values for dry materials, which are intended as design (not specification) values for materials in normal use. Insulation materials in actual service may have thermal values that vary from design values depending on their in-situ properties (*e.g.*, density and moisture content). For properties of a particular product, use the value supplied by the manufacturer or by unbiased tests.

[b] These temperatures are generally accepted as maximum. When operating temperature approaches these limits, follow the manufacturers' recommendations.

[c] Some polyurethane foams are formed by means that produce a stable product (with respect to k), but most are blown with refrigerant and will change with time.

[d] See Table 4, footnote i.

[e] See Table 4, footnote j.

MECHANICAL AND INDUSTRIAL SYSTEMS

Thermal Transmission Data

Table 10 lists the thermal conductivities of various materials used as industrial insulations. These values are functions of the arithmetic mean of the temperatures of the inner and outer surfaces for each insulation.

Heat Loss from Pipes and Flat Surfaces

Tables 11A, 11B, and 12 give heat losses from bare steel pipes and flat surfaces and bare copper tubes. These tables were calculated using ASTM *Standard* C 680, Practice for Determination of Heat Gain or Loss and the Surface Temperature of Insulated Pipe and Equipment Systems by the Use of a Computer Program. User inputs for these programs include operating temperature, ambient temperature, pipe size, insulation type, number of insulation layers, and thickness for each layer. A program option allows the user to input a surface coefficient or surface emittance, surface orientation, and wind speed. The computer uses this information to calculate the heat flow and the surface temperature. The programs calculate the surface coefficients if the user has not already supplied them.

The equations used in ASTM C680 are:

$$h_{cv} = C\left(\frac{1}{d}\right)^{0.2}\left(\frac{1}{t_{avg}}\right)^{0.181}\Delta t^{0.266}\sqrt{1 + 1.277\,(\text{Wind})} \quad (4)$$

where

h_{cv} = convection surface coefficient, Btu/h · ft² · °F
d = diameter for cylinder, in. For flat surfaces and large cylinders ($d > 24$), use $d = 24$.
t_{avg} = average temperature of air film, °F
Δt = surface to air temperature difference, °F
Wind = air speed, mph
C = constant depending on shape and heat flow condition
= 1.016 for horizontal cylinders
= 1.235 for longer vertical cylinders
= 1.394 for vertical plates
= 1.79 for horizontal plates, warmer than air, facing upward
= 0.89 for horizontal plates, warmer than air, facing downward
= 0.89 for horizontal plates, cooler than air, facing upward
= 1.79 for horizontal plates, cooler than air, facing downward

$$h_{rad} = \frac{\epsilon \times 0.1713 \times 10^{-8}[(t_a + 459.6)^4 - (t_s + 459.6)^4]}{(t_a - t_s)} \quad (5)$$

where

h_{rad} = radiation surface coefficient, Btu/h · ft² · °F
ϵ = surface emittance
t_a = air temperature, °F
t_s = surface temperature, °F

Table 11A Heat Loss from Bare Steel Pipe to Still Air at 80 °F[a], Btu/h · ft

Nominal Pipe Size[b], in.	Pipe Inside Temperature, °F									
	180	280	380	480	580	680	780	880	980	1080
0.50	59.3	147.2	263.2	412.3	600.9	836.8	1128.6	1485.6	1918.0	2436.8
0.75	72.5	180.1	322.6	506.2	739.2	1031.2	1392.9	1836.0	2373.5	3018.8
1.00	88.8	220.8	396.1	622.7	910.9	1272.6	1721.2	2271.5	2939.4	3741.6
1.25	109.7	272.8	490.4	772.3	1131.7	1583.8	2145.6	2835.4	3673.4	4680.9
1.50	123.9	308.5	555.1	875.1	1283.8	1798.3	2438.2	3224.6	4180.5	5330.0
2.00	151.8	378.1	681.4	1076.3	1581.5	2218.9	3012.6	3989.2	5177.2	6606.8
2.50	180.5	450.0	811.9	1284.0	1888.8	2652.6	3604.3	4775.3	6199.5	7912.5
3.00	215.9	538.8	973.5	1541.8	2271.4	3194.0	4344.9	5762.2	7486.9	9562.3
3.50	243.9	609.0	1101.4	1746.1	2574.7	3623.6	4933.0	6546.4	8510.4	10874.3
4.00	271.6	678.6	1228.2	1948.7	2875.9	4050.5	5517.5	7326.0	9528.1	12178.9
4.50	299.2	747.7	1354.4	2150.9	3176.8	4477.7	6103.8	8109.5	10553.2	13496.2
5.00	329.8	824.7	1494.8	2375.4	3510.6	4950.7	6751.3	8972.5	11678.4	14936.3
6.00	387.1	968.7	1757.8	2796.8	4138.0	5841.4	7972.7	10603.1	13808.2	17667.6
7.00	440.5	1102.8	2003.0	3189.9	4723.9	6673.5	9114.2	12127.4	15799.4	20220.8
8.00	493.3	1235.7	2246.1	3580.0	5305.5	7500.0	10248.4	13642.2	17778.2	22758.0
9.00	545.9	1368.1	2488.8	3970.2	5888.7	8331.0	11392.1	15174.5	19787.1	25343.6
10.00	604.3	1514.8	2757.2	4400.7	6530.1	9241.1	12638.6	16835.1	21949.2	28104.9
11.00	656.0	1644.8	2995.5	4783.8	7102.1	10054.9	13756.2	18328.4	23900.3	30606.1
12.00	704.0	1762.3	3203.8	5104.9	7557.3	10661.8	14524.9	19256.7	24967.6	31766.8
14.00	771.0	1934.2	3525.9	5636.0	8373.9	11862.4	16235.5	21635.6	28212.3	36120.3
16.00	872.2	2189.0	3993.2	6387.4	9495.9	13458.0	18424.8	24556.6	32021.1	40990.7
18.00	972.5	2441.7	4456.7	7132.9	10609.4	15041.3	20596.7	27453.2	35795.6	45813.1
20.00	1072.1	2692.4	4916.8	7873.2	11715.1	16613.4	22752.5	30326.8	39537.6	50590.0
24.00	1269.3	3188.9	5828.3	9339.9	13905.5	19726.9	27019.7	36010.1	46930.3	60014.7

Table 11B Heat Loss from Flat Surfaces to Still Air at 80 °F, Btu/h · ft²

	Surface Inside Temperature, °F									
	180	280	380	480	580	680	780	880	980	1080
Vertical surface	212.2	533.1	973.3	1558.6	2321.2	3298.0	4530.1	6062.8	7945.5	10231.5
Horizontal surface										
Facing up	234.7	586.4	1061.1	1683.5	2484.9	3501.9	4775.4	6350.4	8276.3	10606.1
Facing down	183.6	465.3	861.4	1399.6	2112.8	3038.4	4217.8	5696.7	7524.5	9754.7

[a]Calculations from ASTM C680-82; steel: k = 314.4 Btu · in/h · ft² · °F; ϵ = 0.94.

[b]Losses per square foot of pipe for pipes larger than 24 in. can be considered the same as losses per square foot for 24-in. pipe.

Example 7. Compute total annual heat loss from 165 ft of nominal 2-in. bare steel pipe in service 4000 h per year. The pipe is carrying steam at 10 psi and is exposed to an average air temperature of 80°F.

Solution: The pipe temperature is taken as the steam temperature, which is 239.4°F, obtained by interpolation from Steam Tables. By interpolation in Table 11A between 180°F and 280°F, heat loss from a 2-in. pipe is 285.3 Btu/h·ft. Total annual heat loss from the entire line is 285.3 Btu/h·ft × 165 ft × 4000 h = 188 million Btu.

In calculating heat flow, Equations (9) and (10) from Chapter 20 generally are used. For dimensions of standard pipe and fitting sizes, refer to the *Piping Handbook*. For insulation product dimensions, refer to ASTM *Standard* C 585, Recommended Practice for Inner and Outer Diameters of Rigid Thermal Insulation for Nominal Sizes of Pipe and Tubing (NPS) System, or to the insulation manufacturers' literature.

Examples 8 and 9 illustrate how Equations (9) and (10) from Chapter 20 can be used to determine heat loss from both flat and cylindrical surfaces. Figure 7 shows surface resistance as a function of heat transmission for both flat and cylindrical surfaces. The surface emittance is assumed to be 0.85 to 0.90 in still air at 80°F.

Example 8. Compute heat loss from a boiler wall if the interior insulation surface temperature is 1100°F and ambient still air temperature is 80°F. The wall is insulated with 4.5 in. of mineral fiber block and 0.5 in. of mineral fiber insulating and finishing cement.

Solution: Assume that the mean temperature of the mineral fiber block is 700°F, the mean temperature of the insulating cement is 200°F, and the surface resistance R_s is 0.60.

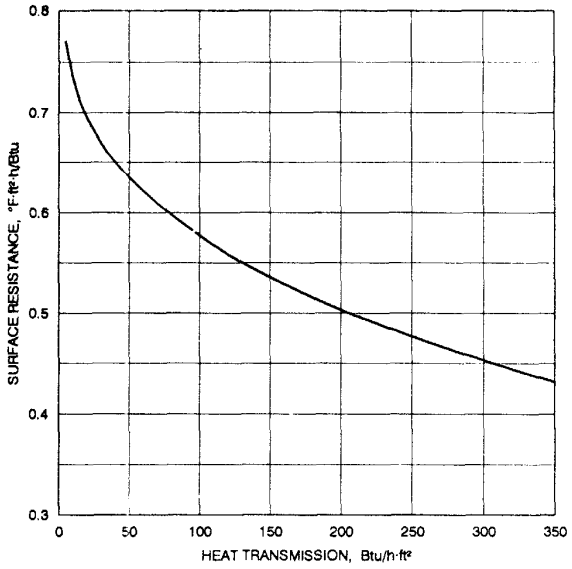

Fig. 7 Surface Resistance as Function of Heat Transmission for Flat Surfaces and Cylindrical Surfaces Greater than 24 Inches in Diameter

Table 12 Heat Loss from Bare Copper Tube to Still Air at 80°F[a], Btu/h·ft

Nominal Tube Size, in.	Tube Inside Temperature, °F 120	150	180	210	240	270	300	330	
0.250	7.1	14.1	21.9	30.6	39.9	49.9	60.6	71.9	
0.375	9.1	18.0	28.1	39.1	51.1	63.9	77.6	92.2	
0.500	11.0	21.8	34.0	47.4	61.9	77.5	94.1	111.8	
0.750	14.7	29.1	45.4	63.3	82.7	103.6	126.0	149.8	
1.000	18.3	36.2	56.4	78.7	102.8	128.9	156.7	186.5	
1.250	21.8	43.1	67.2	93.6	122.4	153.4	186.7	222.2	
1.500	25.2	49.8	77.6	108.3	141.5	177.4	216.0	257.1	
2.000	31.8	62.9	98.0	136.7	178.8	224.3	273.1	325.4	
2.500	38.3	75.6	117.9	164.4	215.1	269.8	328.7	391.8	Dull ϵ = 0.44
3.000	44.6	88.1	137.2	191.5	250.5	314.4	383.2	456.9	
3.500	50.8	100.3	156.3	218.0	285.4	358.2	436.7	520.8	
4.000	57.0	112.3	175.0	244.2	319.7	401.4	489.4	583.9	
5.000	69.0	135.9	211.7	295.5	386.9	486.0	592.8	707.6	
6.000	80.7	159.0	247.7	345.7	452.8	568.9	694.2	829.0	
8.000	103.7	204.1	317.8	443.7	581.3	730.7	892.1	1066.0	
10.000	126.1	247.9	386.1	539.1	706.5	888.4	1085.2	1297.4	
12.000	148.0	290.9	453.0	632.5	829.2	1043.1	1274.6	1524.4	
0.250	5.4	10.8	16.9	23.5	30.5	37.9	45.5	53.5	
0.375	6.8	13.7	21.4	29.7	38.6	47.9	57.6	67.6	
0.500	8.2	16.4	25.7	35.7	46.3	57.4	69.1	81.2	
0.750	10.7	21.6	33.8	46.9	60.9	75.6	90.9	106.8	
1.000	13.2	26.5	41.4	57.6	74.7	92.8	111.6	131.2	
1.250	15.5	31.3	48.8	67.8	88.0	109.3	131.6	154.7	
1.500	17.8	35.8	56.0	77.8	100.9	125.3	150.8	177.4	
2.000	22.2	44.6	69.7	96.8	125.7	156.1	187.9	221.1	
2.500	26.4	53.0	82.8	115.1	149.5	185.6	223.5	263.0	Bright ϵ = 0.08
3.000	30.5	61.2	95.6	132.8	172.4	214.2	257.9	303.5	
3.500	34.4	69.1	107.9	150.0	194.8	242.0	291.4	342.9	
4.000	38.3	76.8	120.0	166.8	216.6	269.1	324.1	381.4	
5.000	45.7	91.8	143.4	199.3	258.8	321.6	387.4	456.1	
6.000	53.0	106.3	166.0	230.7	299.7	372.5	448.7	528.3	
8.000	66.8	134.1	209.4	291.1	378.2	470.1	566.5	667.2	
10.000	80.2	160.8	251.0	349.0	453.4	563.7	679.5	800.4	
12.000	93.0	186.5	291.3	404.9	526.1	654.2	788.7	929.3	

[a]Calculations from ASTM C680-82; for copper: k = 2784 Btu·in/h·ft²·°F.

From Table 10, $k_1 = 0.62$ and $k_2 = 0.80$. Using Equation (9) from Chapter 20:

$$q_s = \frac{1100 - 80}{(4.5/0.62) + (0.5/0.80) + 0.60} = \frac{1020}{8.48}$$
$$= 120.2 \text{ Btu/h} \cdot \text{ft}^2$$

As a check, from Figure 7, at 120.2 Btu/h·ft², $R_s = 0.56$. The mean temperature of the mineral fiber block is:

$$4.5/0.62 = 7.26;\ 7.26/2 = 3.63$$
$$1100 - [(3.63/8.48)(1020)] = 1100 - 437 = 663\,^\circ\text{F}$$

and the mean temperature of the insulating cement is:

$$0.5/0.80 = 0.63;\ 0.63/2 = 0.31;\ 7.26 + 0.31 = 7.57$$
$$1100 - [(7.57/8.48)(1020)] = 1100 - 911 = 189\,^\circ\text{F}$$

From Table 10, at 663°F, $k_1 = 0.60$; at 189°F, $k_2 = 0.79$.

Using these adjusted values to recalculate q_s:

$$q_s = \frac{1020}{(4.5/0.60) + (0.5/0.79) + 0.56} = \frac{1020}{8.69}$$
$$= 117.4 \text{ Btu/h} \cdot \text{ft}^2$$

From Figure 7, at 117.4 Btu/h·ft², $R_s = 0.56$. The mean temperature of the mineral fiber block is:

$$4.5/0.6 = 7.50;\ 7.50/2 = 3.75$$
$$1100 - [(3.75/8.69)(1020)] = 1100 - 440 = 660\,^\circ\text{F}$$

and the mean temperature of the insulating cement is:

$$0.5/0.79 = 0.63;\ 0.63/2 = 0.31;\ 7.50 + 0.31 = 7.81$$
$$1100 - [(7.81/8.69)(1020)] = 1100 - 917 = 183\,^\circ\text{F}$$

From Table 10, at 660°F, $k_1 = 0.60$; at 183°F, $k_2 = 0.79$.

Since R_s, k_1, and k_2 do not change at these values, $q_s = 117.4$ Btu/h·ft².

Example 9. Compute heat loss per square foot of outer surface of insulation if pipe temperature is 1200°F and ambient still air temperature is 80°F. The pipe is nominal 6-in. steel pipe, insulated with a nominal 3-in. thick diatomaceous silica as the inner layer and a nominal 2-in. thick calcium silicate as the outer layer.

Solution: From Chapter 42 of the 1992 ASHRAE *Handbook—Equipment*, $r_o = 3.31$ in. A nominal 3-in. thick diatomaceous silica insulation to fit a nominal 6-in. steel pipe is 3.02 in. thick. A nominal 2-in. thick calcium silicate insulation to fit over the 3.02-in. diatomaceous silica is 2.08 in. thick. Therefore, $r_i = 6.33$ in. and $r_s = 8.41$ in.

Assume that the mean temperature of the diatomaceous silica is 600°F, the mean temperature of the calcium silicate is 250°F and the surface resistance R_s is 0.50. From Table 10, $k_1 = 0.66$; $k_2 = 0.42$. By Equation (10) from Chapter 20:

$$q_s = \frac{1200 - 80}{[8.41 \ln (6.33/3.31)/0.66] + [8.41 \ln (8.41/6.33)/0.40] + 0.50}$$
$$= \frac{1120}{(5.45/0.66) + (2.39/0.40) + 0.50} = 76.0 \text{ Btu/h} \cdot \text{ft}^2$$

From Figure 7, at 76.0 Btu/h·ft², $R_s = 0.60$. The mean temperature of the diatomaceous silica is:

$$5.45/0.66 = 8.26;\ 8.26/2 = 4.13$$
$$1200 - [(4.13/14.83)(1120)] = 1200 - 312 = 888\,^\circ\text{F}$$

and the mean temperature of the calcium silicate is:

$$2.39/0.40 = 5.98;\ 5.98/2 = 2.99;\ 8.26 + 2.99 = 11.25$$
$$1200 - [(11.25/14.83)(1120)] = 1200 - 850 = 350\,^\circ\text{F}$$

From Table 10, $k_1 = 0.72$; $k_2 = 0.46$. Recalculating:

$$q_s = \frac{1120}{(5.45/0.72) + (2.39/0.46) + 0.60} = 83.8 \text{ Btu/h} \cdot \text{ft}^2$$

From Figure 7 at 83.8 Btu/h·ft², $R_s = 0.59$. The mean temperature of the diatomaceous silica is:

$$5.45/0.72 = 7.57;\ 7.57/2 = 3.78$$
$$1200 - [(3.78/13.36)(1120)] = 1200 - 317 = 883\,^\circ\text{F}$$

and the mean temperature of the calcium silicate is:

$$2.39/0.46 = 5.20;\ 5.20/2 = 2.60;\ 7.57 + 2.60 = 10.17$$
$$1200 - [(10.17/13.36)(1120)] = 1200 - 853 = 347\,^\circ\text{F}$$

From Table 10, $k_1 = 0.72$; $k_2 = 0.46$. Recalculating:

$$q_s = \frac{1120}{(5.45/0.72) + (2.39/0.46) + 0.59} = 83.8 \text{ Btu/h} \cdot \text{ft}^2$$

Since R_s, k_1, and k_2 do not change at 83.8 Btu/h·ft², this is q_s. The heat flow per ft² of the inner surface of the insulation is:

$$q_o = q_s (r_s/r_o) = 83.8(8.41/3.31) = 213 \text{ Btu/h} \cdot \text{ft}^2$$

Because trial and error techniques are tedious, the computer programs previously described should be used to estimate heat flows per unit area of flat surfaces or per unit length of piping, and interface temperatures including surface temperatures.

Several methods can be used to determine the most effective thickness of insulation for piping and equipment. Table 13 shows the recommended insulation thicknesses for three different pipe and equipment insulations. Installed cost data can be developed using procedures described by the Federal Energy Administration (1976). Computer programs capable of calculating thickness information are available from several sources. Also, manufacturers of insulations offer computerized analysis programs for designers and owners to evaluate insulation requirements. For more information on determining economic insulation thickness, see Chapter 20.

Chapters 3 and 20 give guidance concerning process control, personnel protection, condensation control, and economics. For specific information on sizes of commercially available pipe insulation, see ASTM *Standard* C585 and consult with the Thermal Insulation Manufacturers Association (TIMA) and its member companies.

CALCULATING HEAT FLOW FOR BURIED PIPELINES

In calculating heat flow to or from buried pipelines, the thermal properties of the soil must be assumed. Table 7 gives the apparent thermal conductivity values of various soil types, and Figure 6 shows the typical trends of apparent soil thermal conductivity with moisture content for various soil types. Table 8 provides ranges of apparent thermal conductivity for various types of rock. Kernsten (1949) also discusses thermal properties of soils. Carslaw and Jaeger (1959) give methods for calculating the heat flow taking place between one or more buried cylinders and the surroundings.

Table 13 Recommended Thicknesses for Pipe and Equipment Insulation

Nominal Pipe Size, in.		MINERAL FIBER (Fiberglass and Rock Wool) Process Temperature, °F										CALCIUM		
		150	250	350	450	550	650	750	850	950	1050	150	250	350
½	Thickness	1	1½	2	2½	3	3½	4	4	4½	5½	1	1½	2
	Heat loss	8	16	24	33	43	54	66	84	100	114	13	24	34
	Surface temperature	72	75	76	78	79	81	82	86	87	87	75	78	80
1	Thickness	1	1½	2	2½	3½	4	4	4½	5	5½	1	2	2½
	Heat loss	11	21	30	41	49	61	79	96	114	135	16	26	38
	Surface temperature	73	76	78	80	79	81	84	86	88	89	76	76	79
1½	Thickness	1	2	2½	3	4	4	4	5½	5½	6	1½	2½	3
	Heat loss	14	22	33	45	54	73	94	103	128	152	17	29	42
	Surface temperature	73	74	77	79	79	82	86	84	88	90	73	75	78
2	Thickness	1½	2	3	3½	4	4	4	5½	6	6	1½	2½	3
	Heat loss	13	25	34	47	61	81	105	114	137	168	19	32	47
	Surface temperature	71	75	75	77	79	83	87	85	87	91	74	76	79
3	Thickness	1½	2½	3½	4	4	4½	4½	6	6½	7	2	3	3½
	Heat loss	16	28	39	54	75	94	122	133	154	184	21	37	54
	Surface temperature	72	74	75	77	81	83	87	86	87	90	73	75	78
4	Thickness	1½	3	4	4	4	5	5½	6	7	7½	2	3	4
	Heat loss	19	29	42	63	88	102	126	152	174	206	25	43	58
	Surface temperature	72	73	74	78	82	86	85	87	88	90	70	76	77
6	Thickness	2	3	4	4	4½	5	5½	6½	7½	8	2	3½	4
	Heat loss	21	38	54	81	104	130	159	181	208	246	33	51	75
	Surface temperature	71	74	75	79	82	84	87	88	89	91	74	75	79
8	Thickness	2	3½	4	4	5	5	5½	7	8	8½	2½	3½	4
	Heat loss	26	42	65	97	116	155	189	204	234	277	35	62	90
	Surface temperature	71	73	76	80	81	86	89	88	89	92	73	76	79
10	Thickness	2	3½	4	4	5	5½	5½	7½	8½	9	2½	4	4
	Heat loss	32	50	77	115	136	170	220	226	259	307	41	66	106
	Surface temperature	72	74	77	81	82	85	90	87	89	91	73	75	80
12	Thickness	2	3½	4	4	5	5½	5½	7½	8½	9½	2½	4	4
	Heat loss	36	57	87	131	154	192	249	253	290	331	47	75	121
	Surface temperature	72	74	77	82	82	86	91	88	89	91	73	76	81
14	Thickness	2	3½	4	4	5	5½	6½	7½	9	9½	2½	4	4
	Heat loss	40	61	94	141	165	206	236	271	297	352	51	81	130
	Surface temperature	72	74	77	82	83	86	87	89	89	91	73	76	81
16	Thickness	2½	3½	4	4	5½	5½	7	8	9	10	3	4	4
	Heat loss	37	68	105	157	171	228	247	284	326	372	50	90	144
	Surface temperature	71	74	78	83	82	87	86	88	89	91	72	76	82
18	Thickness	2½	3½	4	4	5½	5½	7	8	9	10	3	4	4
	Heat loss	41	75	115	173	187	250	270	310	354	404	55	99	159
	Surface temperature	71	74	78	83	83	87	87	88	90	91	73	76	82
20	Thickness	2½	3½	4	4	5½	5½	7	8	9	10	3	4	4
	Heat loss	45	82	126	189	204	272	292	335	383	436	60	108	174
	Surface temperature	71	75	78	83	83	87	87	89	90	92	73	77	82
24	Thickness	2½	4	4	4	5½	6	7½	8	9	10	3	4	4
	Heat loss	53	86	147	221	237	295	320	386	439	498	71	127	203
	Surface temperature	71	74	78	83	83	86	86	89	91	93	73	77	82
30	Thickness	2½	4	4	4	5½	6½	7½	8½	10	10	3	4	4
	Heat loss	65	105	179	268	286	332	383	439	481	591	86	154	247
	Surface temperature	71	74	79	84	84	85	87	89	89	94	73	77	83
36	Thickness	2½	4	4	4	5½	7	8	9	10	10	2½	4	4
	Heat loss	77	123	211	316	335	364	422	486	556	683	119	181	291
	Surface temperature	71	74	79	84	84	84	86	88	90	94	74	77	83
Flat	Thickness	2	3½	4	4½	5½	8½	9½	10	10	10	2½	3½	4
	Heat loss	10	14	20	27	31	27	31	38	47	58	12	20	28
	Surface temperature	72	74	77	80	82	80	82	85	89	93	73	77	81

Consult manufacturer's literature for product temperature limitations. Table is based on typical operating conditions, *e.g.*, 65 °F ambient temperature and 7.5 mph wind speed, and may not represent actual conditions of use. Units for thickness, heat loss, and surface temperature are in inches, Btu/h · ft (Btu/h · ft^2 for flat surfaces), and °F, respectively.

Table 13 Recommended Thicknesses for Pipe and Equipment Insulation (*Concluded*)

SILICATE							CELLULAR GLASS						
Process Temperature, °F							Process Temperature, °F						
450	550	650	750	850	950	1050	150	250	350	450	550	650	750
2½	3	3½	4	4	4	4	1½	1½	2	2½	3	3½	4
42	53	63	75	90	108	128	9	23	34	48	62	78	92
81	82	83	84	87	91	94	70	76	78	82	83	85	84
3	3½	4	4	4	4	4	1½	2	2½	3	3½	4	4
49	60	72	89	109	130	154	12	25	38	52	68	86	112
80	82	83	86	90	94	98	71	75	77	79	81	83	88
3½	4	4	4	4	5	5	1½	2½	3	4	4	4	4
54	68	86	106	128	139	164	15	28	44	56	79	105	137
80	81	85	88	92	91	94	72	75	77	78	82	87	92
3½	4	4½	5	5½	6	6	1½	2½	3	4	4	4	4½
61	75	90	106	123	142	167	17	31	47	61	84	113	140
81	82	84	85	87	88	91	72	74	77	78	82	86	89
4	4½	5	5½	6	6	6	1½	3	3½	4	4	4½	5
71	87	105	123	143	71	202	22	35	54	75	105	132	161
80	82	84	85	87	90	94	73	74	77	79	84	86	89
4	4½	5	5½	6	6½	7	2	3	4	4	4	4½	5
82	101	121	142	164	187	213	22	41	59	87	122	150	185
81	83	85	87	89	90	92	71	74	76	80	85	87	90
4	4½	5	5½	6	7	8	2	3½	4	4	4½	5½	6
105	129	153	178	205	224	245	30	48	74	111	144	171	212
83	85	87	89	91	91	91	72	74	77	82	85	86	89
4½	5	5	6	7	8	8½	2½	3½	4	4	5	5½	6½
117	144	183	200	220	243	277	30	58	90	134	161	203	238
82	85	89	89	89	90	92	71	74	78	83	84	87	89
4	5	5½	6	7½	8½	9	2½	4	4	4	5½	5½	7
149	168	200	233	243	269	306	37	63	106	159	178	238	264
85	86	88	90	89	89	91	71	74	79	84	84	87	88
4	5	5½	7	8	8½	9½	2½	4	4	4	5½	5½	7½
170	191	266	236	262	300	330	42	71	121	181	201	269	284
86	86	89	88	88	90	91	71	74	79	85	84	90	88
4	5	5½	7	8	9	9½	2½	4	4	4	5½	5½	8
183	205	242	252	262	308	352	47	79	134	199	219	293	293
86	87	89	88	88	89	91	72	74	80	85	85	91	87
4	5½	6½	7½	8	9	10	2½	4	4	4	5½	5½	8
204	211	237	265	307	338	372	53	88	149	222	242	325	322
87	85	86	87	89	90	91	72	75	80	86	86	91	88
4	5½	6½	7½	8½	9	10	2½	4	4	4	5½	5½	8
225	232	259	289	320	367	403	59	96	164	245	266	356	351
87	86	87	87	88	90	91	72	75	80	86	86	92	88
4	5½	6½	7½	8½	9½	10	2½	4	4	4½	5½	5½	8
245	252	281	312	346	381	435	64	105	179	243	289	387	379
87	86	87	88	89	90	92	72	75	81	84	86	92	88
4	5½	6½	7½	8½	9½	10	2½	4	4	5	5½	5½	8
287	293	325	360	397	437	497	76	123	209	260	336	449	436
88	87	88	88	89	90	93	72	75	81	83	87	93	89
4	5½	7	8	9	10	10	2½	4	4	5½	5½	5½	8
349	353	368	409	452	498	589	93	150	254	290	405	542	521
88	87	87	88	89	90	94	72	75	81	82	87	93	90
4	6½	7½	8	9	10	10	2½	4	4	5½	5½	5½	8
410	359	406	475	524	576	681	110	176	229	340	474	635	606
89	84	86	88	89	91	94	73	76	81	82	88	94	90
5½	6½	7½	8½	9½	10	10	2½	4	4	5½	5½	7½	8½
29	33	36	39	43	49	58	11	17	29	31	44	43	50
81	83	84	85	87	89	93	73	76	83	84	90	90	93

REFERENCES

Adams, L. 1971. Supporting cryogenic equipment with wood. *Chemical Engineering* (May):156-58.

Bassett, M.R. and H.A. Trethowen. 1984. Effect of condensation on emittance of reflective insulation. *Journal of Thermal Insulation* 8 (October):127.

Carslaw, H.S. and J.C. Jaeger. 1959. Conduction of heat in solids. Oxford University Press, Amen House, London, England, 449.

Dill, R.S., W.C. Robinson, and H.E. Robinson. 1945. Measurements of heat losses from slab floors. National Bureau of Standards. Building Materials and Structures Report, BMS 103.

Economic thickness for industrial insulation. 1976. GPO No. 41-018-001 15-8, Federal Energy Administration, Washington, D.C.

Farouk, B. and D.C. Larson. 1983. Thermal performance of insulated wall systems with metal studs. Proceedings of the 18th Intersociety Energy Conversion Engineering Conference, Orlando, FL.

Farouki, O.T. 1981. Thermal properties of soil. CRREL *Monograph* 81-1, United States Army Corps of Engineers Cold Regions Research and Engineering Laboratory, December.

Fishenden, M. 1962. Tables of emissivity of surfaces. *International Journal of Heat and Mass Transfer* 5:67-76.

Goss, W.P. and R.G. Miller. 1989. Literature review of measurement and prediction of reflective building insulation system performance: 1900-1989. ASHRAE *Transactions* 95(2).

Hooper, F.C. and W.J. Moroz. 1952. The impact of aging factors on the emissivity of reflective insulations. ASTM *Bulletin* (May):92-95.

Hougten, F.C., S.I. Taimuty, C. Gutberlet, and C.J. Brown. 1942. Heat loss through basement walls and floors. ASHVE *Transactions* 48:369.

Joy, F.A. 1958. Improving attic space insulating values. ASHAE *Transactions* 64:251.

Kersten, M.S. 1949. Thermal properties of soils. University of Minnesota, Engineering Experiment Station Bulletin 28, June.

Latta, J.K. and G.G. Boileau. 1969. Heat losses from house basements. *Canadian Building* 19(10).

Lewis, W.C. 1967. Thermal conductivity of wood-base fiber and particle panel materials. Forest Products Laboratory, Research Paper FPL 77, June.

Lotz, W.A. 1964. Vapor barrier design, neglected key to freezer insulation effectiveness. *Quick Frozen Foods* (November):122.

MacLean, J.D. 1941. Thermal conductivity of wood. ASHVE *Transactions* 47:323.

McElroy, D.L., D.W. Yarbrough, and R.S. Graves. 1987. Thickness and density of loose-fill insulations after installation in residential attics. *Thermal insulation: Materials and systems.* F.J. Powell and S.L. Matthews, eds. ASTM STP 922:423-505.

McIntyre, D.A. 1984. The increase in U-value of a wall caused by mortar joints, ECRC/M1843. The Electricity Council Research Centre, Copenhurst, England, June.

Mitalas, G.P. 1982. Basement heat loss studies at DBR/NRC, NRCC 20416. Division of Building Research, National Research Council of Canada, September.

Mitalas, G.P. 1983. Calculation of basement heat loss. ASHRAE *Transactions* 89(1B):420.

Moroz, W.J. 1951. Aging factors affecting reflective insulations. MS Thesis, University of Toronto, January.

Prangnell, R.D. 1971. The water vapor resistivity of building materials—A literature survey. *Materiaux et Constructions* 4:24 (November).

Robinson, H.E., F.J. Powell, and L.A. Cosgrove. 1957. Thermal resistance of airspaces and fibrous insulations bounded by reflective surfaces. National Bureau of Standards, Building Materials and Structures Report BMS 151.

Robinson, H.E., F.J. Powlitch, and R.S. Dill. 1954. The thermal insulation value of airspaces. Housing and Home Finance Agency, Housing Research Paper No. 32.

Sabine, H.J., M.B. Lacher, D.R. Flynn, and T.L. Quindry. 1975. Acoustical and thermal performance of exterior residential walls, doors and windows. National Bureau of Standards, Building Science Series 77, November.

Salomone, L.A. and J.I. Marlowe. 1989. Soil and rock classification according to thermal conductivity: Design of ground-coupled heat pump systems. EPRI CU-6482, Electric Power Research Institute, August.

Shipp, P.H. 1983. Basement, crawlspace and slab-on-grade thermal performance. Proceedings of the ASHRAE/DOE Conference, Thermal Performance of the Exterior Envelopes of Buildings II, ASHRAE SP 38:160-79.

Shu, L.S., A.E. Fiorato, and J.W. Howanski. 1979. Heat transmission coefficients of concrete block walls with core insulation. Proceedings of the ASHRAE/DOE-ORNL Conference, Thermal Performance of the Exterior Envelopes of Buildings, ASHRAE SP 28:421-35.

Tye, R.P. 1985. Upgrading thermal insulation performance of industrial processes. *Chemical Engineering Progress* (February):30-34.

Tye, R.P. 1986. Effects of product variability on thermal performance of thermal insulation. Proceedings of the First Asian Thermal Properties Conference, Beijing, People's Republic of China.

Tye, R.P. and A.O. Desjarlais. 1983. Factors influencing the thermal performance of thermal insulations for industrial applications. *Thermal insulation, materials, and systems for energy conservation in the '80s.* F.A. Govan, D.M. Greason, and J.D. McAllister, eds. ASTM STP 789:733-48.

Tye, R.P. and S.C. Spinney. 1980. A study of various factors affecting the thermal performance of perlite insulated masonry construction. Dynatech Report No. PII-2. Holometrix, Inc. (formerly Dynatech R/D Company), Cambridge, MA.

USDA. 1974. *Wood handbook.* Wood as an engineering material. Forest Products Laboratory, U.S. Department of Agriculture Handbook No. 72, Tables 3-7 and 4-2, and Figures 3-4 and 3-5.

Valore, R.C. 1980. Calculation of U-values of hollow concrete masonry. American Concrete Institute, *Concrete International* 2(2):40-62.

Valore, R.C. 1988. Thermophysical properties of masonry and its constituents, Parts I and II. International Masonry Institute, Washington, D.C.

Valore, R., A. Tuluca, and A. Caputo. 1988. Assessment of the thermal and physical properties of masonry block products (ORNL/Sub/86-22020/1). September.

Van Geem, M.G. 1985. Thermal transmittance of concrete block walls with core insulation. ASHRAE *Transactions* 91(2).

Wilkes, K.E. 1979. Thermophysical properties data base activities at Owens-Corning Fiberglas. Proceedings of the ASHRAE/DOE-ORNL Conference, Thermal Performance of the Exterior Envelopes of Buildings, ASHRAE SP 28:662-77.

Yarbrough, E.W. 1983. Assessment of reflective insulations for residential and commercial applications (ORNL/TM-8891), October.

Yellott, J.I. 1965. Thermal and mechanical effects of solar radiation on steel doors. ASHRAE *Transactions* 71(2):42.

Appendix C
California Design Location Data

The data contained in the following tables was obtained through a joint effort by the Southern California Chapter and the Golden Gate Chapter of ASHRAE. It is reprinted here with the written permission of Southern California Chapter ASHRAE, Inc.

A full listing of design location data for California is contained in the ASHRAE publication *SPCDX, Climate Data for Region X, Arizona, California, Hawaii, and Nevada* (May 1982). The publication may be ordered from:

Order Desk
Building News
10801 National Blvd.
Los Angeles, CA 90064
(800) 873-6397 or (310) 474-7771

Cost: $17.50 + tax + $4.25 shipping and handling

KEY TO ABBREVIATIONS:

AFB Air Force Base
AFS Air Force Station
AP Airport
CO City/County Office
FD Fire Department
FS Fire Station
MCB Marine Corps Base
NAS Naval Air Station
NM National Monument
PH Power House
RS Ranger Station

CALIFORNIA
CLIMATE ZONES

City	County	ClimateZone	Latitude	Longitude (Degree Minute)	Elevation	SUMMER							Winter Minimum	HDD
						.1% Dry Bulb	.1% Wet Bulb	.5% Dry Bulb	.5% Wet Bulb	2% Dry Bulb	2% Wet Bulb	Range		
Adin RS	Modoc	16	41.20	120 57	4195	96	61	92	60	88	59	43	-7	
Alameda NAS	Alameda	3	37.79	122 19	15	88	65	82	64	76	62	21	35	2507
Alamo	Contra Costa	12	37.90	122 55	410	102	69	97	68	92	66	30	23	
Albany	Alameda	3	37.90	122 15	40	88	65	83	64	77	62	16	30	
Alderpoint	Humboldt	2	40.20	123 37	460	100	69	95	67	90	65	39	21	3424
Alhambra	Los Angeles	9	34		483	100	71	96	70	90	68	25	30	
Almaden AFS	Santa Clara	3	37.20	121 54	3470	95	62	90	60	85	59	20	20	4468
Alondra Park	Los Angeles	6	33.90		50	91	69	86	68	81	66	17	35	
Alpine	San Diego	10	32.79	116 46	1735	99	69	95	68	91	67	35	27	
Altadena	Los Angeles	9	34.20		1200	99	68	94	67	88	66	31	32	1920
Alturas RS	Modoc	16	41.5	120 33	4400	99	62	96	61	91	59	43	-10	6895
Alum Rock	Santa Clara	4	37.40	121 50	70	95	68	90	66	84	64	22	28	
Anaheim	Orange	8	33.79		158	99	69	92	68	85	67	26	32	
Anderson	Shasta	11	40.5	122 15	430	107	71	103	70	97	68	30	26	
Angwin	Napa	2	38.59	122 25	1815	98	66	93	64	88	62	33	25	
Antioch	Contra Costa	12	38	121 46	60	102	70	97	68	91	66	34	22	2627
Apple Valley	San Bernardino	14	34.5		2935	105	66	101	65	97	64	38	14	
Aptos	Santa Cruz	3	37		500	94	67	88	66	83	63	30	27	
Arcadia	Los Angeles	9	34.20		475	100	69	96	68	91	67	30	31	
Arcata	Humboldt	1	41	124 06	218	75	61	69	59	65	58	11	28	5029
Arden	Sacramento	12	38.5		80	104	70	100	69	94	67	35	28	
Arroyo Grande	San Luis	5	35.09		105	92	66	86	64	79	62	18	28	
Artesia	Los Angeles	8	33.79		50	99	71	91	70	85	68	23	33	
Arvin	Kern	13	35.20		445	106	71	102	69	98	68	30	26	
Ash Mtn	Tulare	13	36.5	118 50	1708	105	69	101	68	97	66	30	25	2703
Atascadero	San Luis	4	35.5	120 42	837	94	66	89	67	84	65	42	25	
Atherton	San Mateo	3	37.5	122 14	50	90	66	84	64	78	62	27	23	
Atwater	Merced	12	37.29		150	102	72	99	70	94	67	38	24	
Auberry	Fresno	13	37.09	119 30	2140	102	69	98	67	95	64	36	21	3313
Auburn	Placer	11	38.90	121 04	1292	103	69	100	67	95	66	33	25	3089
Avalon	Los Angeles	6	33.40	118 19	25	83	64	75	62	69	60	11	37	2204
Azusa	Los Angeles	9	34.09	118 09	605	101	70	97	69	91	68	36	31	
Baker	San Bernardino	14	35.29	116 06	940	115	73	112	72	108	70	29	23	
Bakersfield AP	Kern	13	35.40	119 03	475	106	71	102	70	98	68	34	26	2185
Balch PH	San Bernardino	14	36.90		1720	100	67	97	66	93	64	26	26	
Baldwin Park	Los Angeles	9	34		394	100	69	96	69	90	68	32	31	
Banning	Riverside	15	33.90	116 53	2349	104	69	100	68	96	67	34	20	
Barrett Dam	San Diego	10	32.70	116 40	1623	103	69	97	68	92	67	35	22	2656
Barstow	San Bernardino	14	34.90	117 02	2162	107	69	104	69	100	67	35	16	2580
Beale AFB	Yuba	11	39.09	121 26	113	105	71	102	70	97	68	34	25	2835
Beaumont	Riverside	10	33.90	116 58	2605	103	68	99	67	95	66	38	22	2628
Bell	Los Angeles	8	33.90		143	97	70	91	69	85	67	22	33	
Bell Gardens	Los Angeles	8	33.90		160	97	70	91	69	78	62	24	29	
Bellflower	Los Angeles	8	33.79		73	98	70	91	69	85	67	21	32	
Belmont	San Mateo	3	37.5		33	90	66	84	64	78	62	24	29	
Ben Lomond	Santa Cruz	3	37.09	122 06	450	92	67	85	66	79	63	30	25	
Benicia	Solano	12	38.09	122 06	55	99	69	93	67	87	65	30	28	
Berkeley	Alameda	3	37.90	122 15	345	90	64	83	63	76	61	16	33	2950
Berryessa Lake	Napa	2	38.59	122 03	480	102	70	98	69	92	67	35	26	

City	County	ClimateZone	Latitude	Longitude (Degree Minute)	Elevation	SUMMER							Winter Minimum	HDD
						.1% Dry Bulb	.1% Wet Bulb	.5% Dry Bulb	.5% Wet Bulb	2% Dry Bulb	2% Wet Bulb	Range		
Beverly Hills	Los Angeles	9	34.09	118 10	268	94	69	88	68	83	66	20	39	
Big Bar RS	Trinity	16	40.79	121 48	1260	102	68	98	67	93	65	46	19	
Big Bear Lake	San Bernardino	16	34.20	116 53	6745	87	59	83	58	79	56	32	-3	6850
Bishop AP	Inyo	16	37.40	118 22	4108	103	61	100	60	97	58	40	5	4313
Blackwells Corner	Kern	13	35.59	119 54	644	99	68	94	66	89	65	31	23	
Bloomington	San Bernardino	10	34		980	106	71	102	70	98	69	34	30	
Blue Canyon AP	Placer	16	39.29	120 42	5280	88	60	85	59	81	57	20	13	5704
Blythe AP	Riverside	15	33.59	114 43	395	115	74	112	73	108	71	27	28	1219
Blythe CO	Riverside	15	33.59	114 36	268	115	74	112	73	108	71	27	24	1312
Boca	Nevada	16	39.40	120 06	5575	92	58	89	57	84	55	46	-18	8340
Bodie	Mono	16	38.20	119 01	8370	83	50	80	49	76	48	42	-21	
Bonita	Madera	13	32.70	117 02	105	91	69	82	67	78	64	20	28	1864
Boron AFS	Kern	14	35.09	117 35	3015	106	70	103	69	98	68	35	18	3000
Borrego Desert PK	San Diego	15	33.20	116 24	805	112	76	107	74	101	72	36	25	
Bowman Dam	Placer	11	39.40	120 39	5347	89	59	86	57	82	55	26	9	5964
Brannan Island	Sacramento	12	38.09	121 42	30	100	69	95	68	89	67	10	24	
Brawley 2 SW	Imperial	15	33	115 33	-100	113	74	110	73	105	73	32	25	1204
Brea Dam	Orange	8	33.90		275	100	69	94	68	86	66	29	30	
Bridgeport	Mono	16	38.20	119 13	6470	89	56	86	54	82	53	41	-20	
Broderick-Bryte	Yolo	12	38.59	121 30	20	104	71	100	69	94	67	36	25	
Brooks Ranch	Yolo	12	38.79	122 09	294	104	71	99	70	93	68	35	19	2968
Buena Park	Orange	8	33.90		75	98	69	92	68	85	67	25	31	
Burbank AP	Los Angeles	9	34.20	118 21	699	101	70	96	68	90	67	28	29	1701
Burbank Vly Pump	Los Angeles	9	34.20	118 21	655	101	69	96	68	90	66	28	29	1678
Burlingame	San Mateo	3	37.59	122 21	10	88	67	82	64	76	63	20	30	
Burney	Shasta	16	40.90	121 40	3127	95	64	92	63	88	61	42	0	6404
Butler Valley (Korbel)	Humboldt	1	40.7	123 56	420	91	66	86	64	81	62	22	20	
Buttonwillow	Kern	13	35.40	119 28	269	103	71	99	70	95	68	36	20	2621
Cabrillo NM	San Diego	7	32.70	117 14	410	89	69	84	68	80	67	12	39	
Cachuma Lake	Santa Barbara	5	34.59	119 59	781	97	69	92	67	87	65	19	26	
Calabasas	Los Angeles	9	34.20		1100	102	71	98	70	93	69	26	26	2348
Calaveras Big Trees	San Joaquin	12	38.29	120 19	4696	92	61	88	60	84	58	33	11	5848
Calexico	Imperial	15	32.70		12	114	74	110	73	106	71	28	26	
Callahan	Siskiyou	16	41.29	122 48	3185	97	63	93	62	88	60	35	7	
Calwa	Fresno	13	36.79		330	105	73	101	71	97	68	34	23	
Camarillo	Ventura	6	34.20	119 12	147	91	69	84	68	78	67	22	28	
Cambria AFS	San Luis	5	35.5	121 04	690	78	62	72	61	66	59	16	30	3646
Camp Pardee	Calaveras	12	38.20	120 51	658	106	71	103	70	98	69	36	27	2812
Camp Roberts	Monterey	4	35.79	120 45	765	106	72	101	71	95	69	45	16	2890
Campbell	Santa Clara	4	37.29	121 50	195	93	69	88	66	83	65	30	28	
Campo	San Diego	14	32.59	116 28	2630	101	67	95	66	90	66	41	16	3303
Canoga Park	Los Angeles	9	34.20	118 34	790	104	71	99	70	93	69	38	25	1884
Cantil	Kern	14	35.29	117 58	2010	111	71	107	71	103	70	32	12	
Canyon Dam	Plumas	16	40.09	121 05	4555	93	60	90	59	85	57	39	1	6834
Capitola	Santa Cruz	3	37		64	94	67	88	66	81	63	24	27	
Cardiff-by-the-Sea	San Diego	7	33		80	87	68	83	67	77	65	12	35	
Carlsbad	San Diego	7	33.20		44	87	68	83	67	77	65	10	34	
Carmel Valley	Monterey	3	36.5	121 44	425	94	68	88	66	80	65	20	25	
Carmichael	Sacramento	12	38.59	121 27	100	104	70	100	69	94	68	35	25	
Carpinteria	Santa Barbara	6	34.40		385	90	69	83	67	77	65	15	30	

City	County	ClimateZone	Latitude	Longitude (Degree Minute)	Elevation	SUMMER							Winter Minimum	HDD
						.1% Dry Bulb	.1% Wet Bulb	.5% Dry Bulb	.5% Wet Bulb	2% Dry Bulb	2% Wet Bulb	Range		
Carson	Los Angeles	6	33.79		60	96	69	88	68	82	66	19	33	
Castle AFB	Merced	12	37.40	120 34	188	105	71	101	70	96	69	33	24	2590
Castro Valley	Alameda	3	37.59	122 12	177	93	67	87	67	80	65	25	24	
Catheys Valley	Mariposa	12	37.40	120 03	1000	102	69	99	68	94	67	38	21	
Cecilville	Siskiyou	16	41.09	123 08	3000	95	63	89	62	84	59	44	13	
Cedarville	Modoc	16	41.5	120 10	4670	97	61	94	60	89	58	35	1	6304
Centerville PH	Butte	11	39.79	121 40	522	105	70	100	68	96	67	40	25	2895
Ceres	Stanislaus	12	37.59		90	101	72	96	70	90	67	36	24	
Cerritos	Los Angeles	8	33.90		34	99	71	92	69	85	68	23	33	
Cherry Valley Dam	Tuolumne	10	38		4765	96	62	92	61	88	59	32	9	
Cherryland	Alameda	3	37.5		100	93	67	86	66	79	64	24	26	
Chester	Plumas	16	40.29	121 14	4525	94	62	91	61	86	59	33	-3	
Chico Exp Sta	Butte	11	39.70	121 47	205	105	70	102	69	96	68	37	22	2878
China Lake	San	14	35.70	117 41	2220	112	70	108	68	104	68	33	15	2560
Chino	San Bernardino	10	34		714	104	70	100	69	94	68	35	27	
Chula Vista	San Diego	7	32.59	117 05	9	90	70	84	68	79	66	9	33	2072
Citrus Heights	Sacramento	12	38.70	121 27	138	104	71	100	70	94	68	36	24	
Claremont	Los Angeles	9	34.09	117 43	1201	101	69	97	68	91	66	34	29	2049
Clarksburg	Yolo	12	38.40	121 32	14	102	70	97	69	91	67	35	24	2971
Clearlake Highlands	Lake	2	39	122 43	1360	101	69	97	68	89	65	36	15	
Cloverdale	Sonoma	2	38.79	122 59	320	102	70	97	69	89	66	37	26	2763
Clovis	Fresno	13	36.79	119 43	404	105	72	102	70	98	68	36	22	
Coachella	Riverside	15	33.70		-76	114	74	110	73	106	73	28	25	
Coalinga	Fresno	13	36.20	120 21	671	103	70	98	70	93	69	34	23	2592
Colfax	Placer	11	39.09	120 57	2418	100	66	97	65	92	63	29	22	3424
Colton	San Bernardino	10	34.09		978	105	70	102	68	97	67	35	28	
Colusa	Colusa	11	39.20	122 01	60	103	72	100	70	94	68	36	23	2793
Commerce	Los Angeles	8	33.90		175	98	69	92	68	86	67	23	33	
Compton	Los Angeles	8	33.90	118 13	71	97	69	90	68	83	67	21	33	1606
Concord	Contra Costa	12	38	112 00	195	102	70	97	68	89	65	34	27	3035
Corcoran	Kings	13	36.09	119 42	200	106	72	102	71	98	70	36	22	2666
Corona	Riverside	10	33.90	117 34	710	104	70	100	69	92	67	35	26	1794
Coronado	San Diego	7	32.70	117 10	20	89	69	82	67	76	65	10	36	1500
Corte Madera	Marin	2	37.90		55	97	68	91	66	84	64	34	28	
Costa Mesa	Orange	6	33.70	117 53	100	88	68	81	66	73	65	16	31	1482
Covelo	Mendocino	2	39.79	123 15	1385	99	67	93	65	87	63	43	15	4179
Covina	Los Angeles	9	34.09		575	101	70	97	69	91	68	34	29	
Crescent City	Del Norte	1	41.79	124 12	40	75	61	69	59	65	58	18	28	4445
Crockett	Contra Costa	12	38	122 13	9	96	68	90	66	85	64	23	28	
Crows Landing	Stanislaus	12	37.40	121 06	140	101	70	96	68	89	66	33	23	2767
Cucamonga	San Bernardino	10	34.09		1450	103	69	99	68	93	65	31	29	
Cudahy	Los Angeles	8	33.90		130	98	70	91	69	85	67	21	33	
Culver City	Los Angeles	8	34	118 24	106	96	70	88	69	83	67	18	35	1515
Cupertino	Santa Clara	4	37.29	122 00	70	96	68	88	67	80	64	30	28	
Cuyama	Santa Barbara	4	34.90	116 35	2255	99	68	96	67	89	66	42	13	
Cuyamaca	San Diego	7	33		4650	92	64	85	62	81	59	29	11	4848
Cypress	Orange	8	33.79		75	98	70	92	69	85	67	24	31	
Daggett AP	San Bernardino	14	34.90	116 47	1915	109	68	106	68	102	66	33	21	2203
Daly City	San Mateo	3	37.59	122 30	410	84	65	78	62	73	61	16	34	
Davis	Yolo	12	38.5	121 46	60	103	72	99	70	93	68	41	24	2844

City	County	ClimateZone	Latitude	Longitude (Degree Minute)	Elevation	SUMMER							Winter Minimum	HDD
						.1% Dry Bulb	.1% Wet Bulb	.5% Dry Bulb	.5% Wet Bulb	2% Dry Bulb	2% Wet Bulb	Range		
De Sabla	Butte	11	39.90	121 37	2713	97	66	94	64	88	62	35	18	4237
Death Valley	Inyo	14	36.5	116 52	-194	121	77	118	76	114	74	28	27	1147
Deep Springs Clg	Inyo	16	37.5	117 59	5225	98	60	95	59	92	58	35	-3	
Deer Creek PH	Nevada	16	39.29	120 51	4455	93	61	91	60	87	58	39	10	5863
Del Aire	Los Angeles	6	34		100	91	69	84	67	79	66	15	37	
Delano	Kern	13	35.79		323	106	71	102	70	98	69	36	22	
Denair	Stanislaus	12	37.59	120 47	137	100	70	95	69	89	67	38	22	2974
Diamond Bar	Los Angeles	9	34		880	101	69	97	68	92	66	33	28	
Dinuba	Tulare	13	36.5		340	104	73	101	70	96	69	36	24	
Dixon	Solano	12	38.40	121 51	100	104	72	99	70	93	68	36	24	2826
Dobbins	Yuba	11	39.40	121 12	1640	104	70	101	68	96	67	31	24	
Donner Mem Stt Pk	Nevada/Placer	16	39.29	120 15	5937	85	56	82	56	77	54	40	-3	
Donner Summit	Placer	16	39.40	120 20	7239	80	53	77	53	72	50	40	-8	8290
Downey	Los Angeles	8	33.90	118 00	110	98	71	90	70	84	68	21	32	
Downieville RS	Sierra	16	39.59	120 48	2895	98	64	95	63	90	61	42	13	
Doyle	Lassen	16	40	120 06	4390	96	63	93	62	88	59	42	0	
Dry Canyon Res	Ventura	16	34.5	118 32	1455	105	71	100	69	96	68	32	24	
Duarte	Los Angeles	9	34.09		500	100	69	96	68	90	67	33	31	
Dublin	Alameda	12	37.70	121 30	200	99	69	93	67	86	65	35	24	
Dudleys	Mariposa	12	37.70	120 06	3000	97	65	94	64	90	62	44	10	4959
Duttons Landing		2	38.2	122 18	20	96	68	91	66	84	64	31	26	
Eagle Mtn	Riverside	14	33.79	115 27	973	113	72	110	71	105	69	24	32	1138
East Los Angeles	Los Angeles	9	34	118 15	250	99	69	92	68	86	67	21	38	
East Park Res	Colusa	11	39.40	122 31	1205	101	69	97	68	92	66	38	19	3455
Edwards AFB	Kern	14	34.90	117 52	2316	107	69	104	68	99	66	35	10	3123
El Cajon	San Diego	10	32.70	116 57	525	96	70	91	69	87	67	30	29	
El Capitan Dam	San Diego	14	32.90	116 49	600	105	71	98	70	93	68	35	29	1533
El Centro	Imperial	15	32.79	115 34	-30	115	74	111	73	107	73	34	26	1212
El Cerrito	Contra Costa	3	37.79		70	91	66	84	64	75	62	17	30	
El Mirage	San Bernardino	14	34.59		2910	105	69	101	68	97	66	31	9	
El Monte	Los Angeles	9	34.09		271	101	71	97	70	91	68	30	31	
El Rio	Ventura	6	34.29		50	95	69	88	68	82	66	20	30	
El Segundo	Los Angeles	6	33.90		105	91	69	84	68	79	66	14	37	
El Toro MCAS	Orange	8	33.70	117 44	380	96	69	89	69	82	68	26	34	1591
Electra PH	Amador	12	38.29	120 40	715	106	70	102	69	98	68	41	23	2858
Elk Valley	Del Norte	16	42	123 43	1705	96	65	90	63	84	61	39	16	5404
Elsinore	Riverside	10	33.70	117 20	1285	105	71	101	70	98	69	39	22	2128
Encinitas	San Diego	7	33		50	87	68	83	67	77	65	10	35	
Enterprise	Shasta	11	40.59		470	107	69	103	68	97	67	29	26	
Escondido	San Diego	10	33.09	117 05	660	97	69	90	68	84	67	29	26	2005
Eureka	Humboldt	1	40.79	124 10	43	75	61	69	59	65	58	11	30	4679
Fair Oaks	Sacamento	12	38.70	121 16	50	104	70	100	69	94	69	36	23	
Fairfax	Marin	2	38		110	96	68	90	66	83	63	34	26	
Fairfield FS	Solano	12	38.29	122 02	38	103	69	98	68	91	66	34	24	2686
Fairmont	Los Angeles	14	34.70	118 26	3060	100	67	96	66	92	65	22	22	3330
Fallbrook	San Diego	10	33.59	117 15	660	94	68	89	67	85	66	29	26	2077
Ferndale	Humboldt	1	40.5	124 18	1445	76	57	66	56	62	54	12	28	
Fillmore	Verntura	9	34.40		435	100	70	94	69	87	67	30	28	
Five Points	Fresno	13	36.40	120 09	285	103	71	99	70	93	68	36	21	
Fleming Fish & Game	Lassen	16	40.40	120 19	4000	96	62	93	61	88	59	40	-3	

City	County	ClimateZone	Latitude	Longitude (Degree Minute)	Elevation	SUMMER							Winter Minimum	HDD
						.1% Dry Bulb	.1% Wet Bulb	.5% Dry Bulb	.5% Wet Bulb	2% Dry Bulb	2% Wet Bulb	Range		
Florence-Graham	Los Angeles	8	34		175	98	69	90	68	84	67	19	35	
Florin	Sacramento	12	38.5		100	104	71	100	69	94	68	35	29	
Folsom Dam	Sacramento	12	38.70	121 10	350	104	70	101	69	95	67	36	25	
Fontana	San Bernardino	10	34.09	117 26	1090	105	70	101	69	97	67	33	30	1530
Forest Glen	Trinity	16	40.40	123 20	2340	96	65	92	64	88	62	42	12	
Fort Baker	Marin	3	37.79	122 28	15	87	66	81	65	73	65	12	33	3080
Fort Bidwell	Modoc	16	41.90	120 08	4498	93	60	90	59	85	57	38	-2	6381
Fort Bragg	Mendocino	1	39.5	123 49	80	75	60	67	59	62	58	15	29	4424
Fort Jones RS	Siskiyou	16	41.59	122 51	2725	98	64	93	63	88	61	44	5	5590
Fort MacArthur	San Diego	7	33.70	118 18	200	92	69	84	68	78	66	13	35	1819
Fort Ord	Monterey	3	36.70	121 46	134	86	65	77	63	70	60	18	24	3818
Fort Ross	Sonoma	1	38.5	123 15	116	79	63	74	62	65	59	19	30	4127
Foster City	San Mateo	3	37.5	122 14	20	92	67	84	65	76	63	22	29	
Fountain Valley	Orange	6	33.70		60	97	70	90	68	84	67	18	33	
Freedom	Santa Cruz	3	37		1495	89	67	85	64	79	62	22	27	
Fremont	Alameda	3	37.5	122 00	56	94	67	88	65	81	63	24	25	
Fresno AP	Fresno	13	36.79	119 43	328	104	73	101	71	97	68	34	24	2650
Friant Gov Camp	Fresno	13	37	119 43	410	106	72	103	70	100	68	40	23	2768
Fullerton	Orange	8	33.90		340	100	70	94	69	87	68	26	30	
Garden Grove	Orange	8	33.59		85	98	70	91	68	84	67	23	31	
Gardena	Los Angeles	8	33.90		40	92	69	85	68	80	66	18	32	
George AFB	San Bernardino	14	34.59	117 23	2875	105	67	102	65	98	62	31	19	2887
Georgetown RS	El Dorado	12	38.90	120 47	3001	98	64	95	63	90	61	31	18	
Giant Forest	Tulare	16	36.59	118 46	6412	84	56	81	55	77	53	26	5	
Gillespie Field	Solano	12	32.79		385	98	71	91	70	85	68	30	24	
Gilroy	Santa Clara	4	37	121 34	194	101	70	93	68	86	65	25	23	
Glen Avon	Riverside	10	34		827	105	70	101	69	95	67	35	28	
Glendale	Los Angeles	9	34.20		563	101	70	96	68	90	67	28	30	
Glendora	Los Angeles	9	34.09		822	102	69	98	68	92	67	35	30	
Glenville	Kern	16	35.70	118 44	3140	97	67	94	66	90	64	43	11	4423
Gold Rock Rch	Imperial	14	32.90		485	113	73	110	72	106	70	28	31	
Grant Grove	Tulare	16	36.70	118 58	6600	82	56	78	55	74	52	26	6	7044
Grass Valley	Nevada	11	39.20	121 04	2400	99	67	96	65	91	63	29	19	
Graton	Sonoma	2	38.40	122 52	200	95	68	91	67	82	64	34	22	3409
Grossmont	San Diego	7	32.70		530	96	69	89	68	84	66	23	31	
Grover City	San Luis	5	35.09		100	93	69	86	64	80	62	18	30	
Hacienda Hts	Los Angeles	9	34		300	100	69	96	68	90	67	28	31	
Haiwee	Inyo	16	36.09	117 57	3825	102	65	99	64	95	62	27	15	3700
Half Moon Bay	San Mateo	3	37.5	122 26	60	83	64	76	62	69	59	15	32	3843
Hamilton AFB	Marin	2	38.09	122 30	3	95	69	88	67	81	65	28	27	3311
Hanford	Kings	13	36.29	119 40	242	102	71	99	70	94	68	37	22	2736
Happy Camp RS	Siskiyou	16	41.79	123 22	1150	103	67	97	66	92	65	41	18	4263
Hat Creek PH 1	Shasta	16	40.90	121 33	3015	99	65	96	64	91	62	48	2	5689
Hawaiian Gardens	Los Angeles	8	33.79		75	97	70	91	69	84	67	23	32	
Hawthorne	Los Angeles	8	33.90		70	92	69	85	68	80	66	16	37	
Hayfield Pumps	Riverside	14	33.70	115 38	1370	112	71	108	70	104	68	31	24	1529
Hayward	Alameda	3	37.70	122 07	530	92	66	86	65	81	62	24	26	2909
Healdsburg	Sonoma	2	38.59	122 52	102	102	69	95	68	90	66	37	26	2572
Hemet	Riverside	10	33.70		1655	109	70	104	69	101	67	40	20	
Henshaw Dam	San Diego	10	33.20		2700	99	68	94	67	90	66	38	15	3708

City	County	ClimateZone	Latitude	Longitude (Degree Minute)	Elevation	SUMMER							Winter Minimum	HDD
						.1% Dry Bulb	.1% Wet Bulb	.5% Dry Bulb	.5% Wet Bulb	2% Dry Bulb	2% Wet Bulb	Range		
Hermosa Beach	Los Angeles	6	33.90		16	92	69	84	68	78	66	12	38	
Hetch Hetchy	Tuolomne	16	38	119 47	3870	93	62	89	61	85	59	32	14	4816
Highland	San Bernardino	10	34.09		1315	106	70	102	69	97	68	36	26	
Hillcrest Center	Kern or Shasta	0	35.40		500	106	71	102	70	98	68	34	26	
Hillsborough	San Mateo	3	37.59	122 18	352	90	66	82	65	74	64	23	30	
Hilts	Siskiyou	16	42	122 38	2900	97	64	93	62	89	60	39	5	
Hollister	San Benito	4	36.90	121 25	280	96	68	89	67	81	65	30	21	2725
Hollywood	Los Angeles	9	34	118 23	384	96	70	89	69	83	67	20	36	
Hoopa	Humboldt	2	41	123 40	360	100	67	92	66	87	64	25	23	
Huntington Beach	Orange	6	33.70	117 48	40	91	69	83	67	76	66	14	34	
Huntington Lake	Fresno	16	37.20	119 13	7020	80	55	77	54	73	51	25	3	7632
Huntington Park	Los Angeles	8	34	118 00	175	98	70	90	69	84	67	20	38	
Idlewild	Del Norte	1	41.90	124 00	1250	103	68	96	66	92	65	40	18	
Idria	San Benito	4	36.40	120 40	2650	97	66	92	65	87	62	27	24	3128
Idyllwild	Riverside	16	33.70	116 43	5397	93	62	89	61	84	60	35	9	
Imperial AP	Imperial	15	32.79	115 34	-59	114	74	110	73	106	72	31	26	1060
Imperial Beach	San Diego	7	32.5	117 07	23	87	69	82	68	78	67	10	35	1839
Imperial CO	Imperial	16	32.90		-64	112	73	108	72	104	71	31	29	976
Independence	Inyo	16	36.79		3950	104	61	101	60	97	60	31	12	
Indio	Riverside	15	33.70	116 15	11	115	75	112	75	107	74	30	24	1059
Inglewood	Los Angeles	8	33.90	118 00	105	92	68	85	67	80	65	15	37	
Inyokern NAS	Kern	14	35.70	117 49	2440	110	71	106	68	102	66	37	15	2772
Iron Mtn	Shasta	11	34.09	115 08	922	116	75	112	74	108	73	26	29	1251
Irvine	Orange	8	33.70	118 00	50	96	69	88	68	82	67	27	33	
Isla Vista	Santa Barbara	6	34.5		40	90	69	83	67	77	65	20	33	
Jess Valley	Modoc	16	41.29		5300	92	59	89	58	84	56	35	-7	7045
John Wayne AP	Orange	7	33.59		115	98	70	91	68	84	67	26	33	1496
Julian Wynola	San Diego	14	33.09	116 48	3650	96	66	91	64	87	62	39	20	4049
Kentfield	Marin	2	38	122 33	120	97	66	91	65	84	63	35	27	3009
Kern River PH 1	Kings	13	35.5	118 47	970	106	72	103	71	99	69	26	30	1878
Kern River PH 3	Kern	16	35.79	118 34	2703	103	69	100	68	96	66	34	19	2891
Kettleman Stn	Kings	13	36.09	120 05	508	104	71	100	70	93	68	31	26	2180
King City	Monterey	4	36.20	121 08	320	94	67	90	65	85	64	36	20	2639
Klamath	Del Norte	1	41.5	124 05	25	79	62	71	60	66	58	18	26	4509
Knights Ferry	Stanislaus	12	37.79	120 34	315	103	70	99	68	94	67	37	19	
La Canada-Flintridge	Los Angeles	9	34.20	118 00	1365	99	69	95	68	88	66	30	32	
La Crescenta-Montrose	Los Angeles	9	34.20	118 00	1565	98	69	94	68	87	66	33	31	
La Habra	Orange	8	33.90	118 00	305	100	69	94	68	87	67	27	30	
La Mesa	San Diego	7	32.79	117 01	530	94	70	88	69	84	67	23	34	1567
La Mirada	Los Angeles	9	33.90	118 00	115	99	70	91	69	85	68	26	31	
La Palma	Orange	8	33.90	118 00	75	98	69	92	68	85	67	25	31	
La Puente	Los Angeles	9	34	118 00	320	101	71	97	70	91	69	28	31	
La Verne	Los Angeles	9	34.09	118 00	1235	101	69	97	68	91	67	34	29	
Lafayette	Contra Costa	12	37.90	122 08	535	100	69	94	67	87	66	32	24	
Laguna Beach	Orange	6	33.5	117 47	35	91	69	83	68	76	66	18	30	2222
Lake Arrowhead	San Bernardino	16	34.2	117 11	5205	90	62	86	61	81	59	26	13	5310
Lake Spaulding	Nevada	16	39.29	120 38	5156	89	58	86	57	83	55	34	3	6447
Lakeport	Lake	2	39	122 55	1347	97	67	93	66	88	63	41	20	3728
Lakeshore	Fresno	16	40.90		1075	104	69	100	68	95	66	28	29	
Lakeside	San Diego	10	32.79	117 00	690	95	69	90	68	86	66	20	26	

City	County	ClimateZone	Latitude	Longitude (Degree Minute)	Elevation	SUMMER							Winter Minimum	HDD
						.1% Dry Bulb	.1% Wet Bulb	.5% Dry Bulb	.5% Wet Bulb	2% Dry Bulb	2% Wet Bulb	Range		
Lakewood	Los Angeles	8	33.90	118 00	45	98	70	90	68	84	66	22	33	
Lamont	Kern	13	35.29	120 00	500	106	72	102	71	98	69	34	26	
Lancaster	Los Angeles	14	34.70	118 12	2340	106	68	102	67	98	66	35	12	
Larkspur	Marin	2	37.90	122 30	20	97	68	91	66	84	64	34	28	
Las Plumas	Butte	11	39.70		506	104	71	101	70	96	68	32	24	
Lava Beds	Siskiyou	16	41.70	121 31	4770	93	59	89	58	84	56	41	-1	
Lawndale	Los Angeles	8	33.90	118 00	66	92	69	85	68	80	66	16	37	
Le Grand	Merced	12	37.20	120 15	255	101	70	96	68	91	66	38	23	2696
Lemon Grove	San Diego	7	32.70	117 12	437	96	71	88	69	84	67	19	34	
Lemoncove	Tulare	13	36.40	119 02	513	105	72	102	70	98	68	38	25	2513
Lemoore NAS	Kings	13	36.29	119 57	228	104	72	101	71	97	69	37	19	2960
Lennox	Los Angeles	8	33.90	117 45	71	92	69	85	68	80	66	16	37	
Lindsay	Tulare	13	36.20	119 04	395	105	72	101	71	97	69	40	24	2634
Little Panoche	Fresno	13	36.79		677	100	68	94	67	86	66	33	23	
Livermore	Alameda	12	37.70	121 57	490	100	69	95	68	88	67	35	22	3012
Llano Shawnee	Los Angeles	14	34.5	117 45	3820	104	68	99	67	95	65	31	21	
Lodgepole	Lassen	16	36.59	118 43	6735	84	57	80	56	78	54	26	-4	
Lodi	San Joaquin	12	38.09	121 17	40	101	70	97	68	91	67	38	23	2859
Loma Linda	San Bernardino	10	34	117 30	1150	106	70	103	69	99	67	36	27	
Lomita	Los Angeles	6	33.79	119 00	56	95	69	87	68	81	66	18	33	
Lompoc	Santa Barbara	5	34.90	120 27	95	84	63	77	62	72	60	18	26	2888
Long Beach AP	Los Angeles	6	33.79	118 14	25	99	71	90	69	84	66	21	33	1606
Long Beach CO	Los Angeles	6	33.70	118 09	34	97	70	88	68	82	65	18	35	
Los Alamitos NAS	Orange	8	33.79	118 03	30	98	71	89	69	83	68	23	32	1740
Los Altos	Santa Clara	4	37.29	122 00	163	96	68	88	65	80	62	26	28	
Los Angeles AP	Los Angeles	6	33.90	118 24	97	91	67	84	67	79	66	14	37	1819
Los Angeles CO	Los Angeles	9	34	118 14	270	99	69	92	68	86	67	21	38	1245
Los Banos	Merced	12	37	120 52	120	100	70	96	68	88	67	42	22	2616
Los Banos Res	Merced	12	37	120 52	407	101	70	97	68	89	67	42	23	
Los Gatos	Santa Clara	4	37.20	121 58	365	98	69	90	67	82	66	32	26	2741
Lucerne Valley	San Bernardino	14	34.5	116 57	2957	105	67	101	66	98	64	38	12	
Lynwood	Los Angeles	8	33.90	118 00	88	98	70	90	69	83	67	21	32	
Madera	Madera	13	37	120 04	268	105	72	101	70	96	68	40	24	2673
Manhattan Beach	Los Angeles	6	33.90	118 00	120	91	69	84	68	79	66	12	38	
Manteca	San Joaquin	12	37.79	121 12	34	102	70	97	68	91	67	37	24	
Manzanita Lake	Shasta	16	40.5	121 34	5850	87	58	84	57	79	55	34	-3	7617
March AFB	Riverside	10	33.90	117 15	1511	103	70	99	68	94	65	34	23	2089
Maricopa	Kern	13	35.09	119 23	675	106	71	102	70	98	68	29	25	2302
Marina	Monterey	3	36.70		20	86	66	77	63	70	61	18	32	
Markley Cove		2	38.5	122 07	480	104	70	99	69	93	67	39	23	
Martinez FS	Contra Costa	12	38	122 08	40	99	67	94	66	88	65	36	28	
Marysville	Yuba	11	39.20	121 35	60	105	72	102	70	97	68	36	27	2552
Mather AFB	Sacramento	12	38.59	121 18	96	104	71	100	70	94	68	35	28	
Maywood	Los Angeles	8	34	118 00	170	97	70	91	69	85	67	21	34	
McClellan AFB	Sacramento	12	38.70	121 24	86	105	71	102	70	96	68	35	23	2566
McCloud	Siskiyou	16	41.29	122 08	3300	96	63	93	62	87	60	42	5	5990
Mecca FS	Riverside	15	33.59	116 04	-180	115	75	111	75	107	74	30	24	1185
Menlo Park	San Mateo	3	37.40	122 20	65	94	67	86	65	78	63	25	27	
Merced AP	Merced	12	37.29	120 34	153	103	71	100	69	95	67	36	21	2653
Mill Creek	Tehama	16	35.09	117 01	2940	102	67	97	66	94	65	28	28	

City	County	ClimateZone	Latitude	Longitude (Degree Minute)	Elevation	SUMMER							Winter Minimum	HDD
						.1% Dry Bulb	.1% Wet Bulb	.5% Dry Bulb	.5% Wet Bulb	2% Dry Bulb	2% Wet Bulb	Range		
Mill Valley	Marin	3	37.90	122 35	80	97	68	91	66	84	64	28	28	3400
Millbrae	San Mateo	3	37.59	122 21	10	90	66	82	63	74	61	24	30	
Milpitas	Santa Clara	4	37.40	121 54	15	94	68	87	65	79	63	27	27	
Mineral	Tehama	16	40.40	121 36	4911	90	60	87	59	82	57	38	2	7257
Miramir AFS	San Diego	7	32.90	117 08	477	97	69	91	68	86	67	22	32	1532
Mission Viejo	Orange	8	33.59	118 00	350	95	67	87	66	81	63	22	33	
Mitchell Caverns	San Berardino	14	34.90		4350	102	64	98	63	94	61	29	21	
Modesto	Stanislaus	12	37.59	121 00	91	102	73	99	70	95	68	36	25	2671
Moffett Field NAS	Santa Clara	4	37.40	122 03	39	89	68	84	66	78	64	23	30	2511
Mojave	Kern	14	35.09	118 11	2735	106	68	102	67	98	66	35	16	3012
Mono Lake	Mono	16	38	119 09	6450	91	58	88	57	84	55	32	4	6518
Monrovia	Los Angeles	9	34.20	118 18	562	100	69	96	68	90	67	30	33	
Montague	Siskiyou	16	41.79	122 28	2648	99	66	95	65	90	63	39	3	5474
Montclair	San Bernardino	10	34	117 00	1220	104	69	100	68	94	66	35	28	
Montebello	Los Angeles	9	34	118 06	205	98	69	93	68	86	67	24	33	
Monterey AP	Monterey	3	36.59	121 52	245	86	65	77	62	70	61	20	30	3556
Monterey CO	Monterey	3	36.59	121 52	345	87	65	78	62	71	61	20	32	3169
Monterey Park	Los Angeles	9	34	118 00	380	99	69	94	68	87	67	23	30	
Monticello Dam	Solano	2	38.5	122 07	505	105	71	100	70	94	68	39	26	
Moraga	Contra Costa	12	37.79	122 10	600	99	68	93	66	86	64	27	21	
Morgan Hill	Santa Clara	4	37.09	120 00	350	100	69	92	68	85	66	25	26	
Morro Bay FD	San Luis	5	35.40	120 51	115	88	65	82	64	76	62	14	31	
Mount Baldy Notch	San Bernardino	16	34.29	117 37	7735	80	58	76	57	71	54	32	4	
Mount Diablo	Contra Costa	12	37.90	121 55	2100	101	68	96	66	87	65	28	27	4600
Mount Hamilton	Santa Clara	4	37.29	121 39	4206	95	59	88	58	81	56	18	18	4724
Mount Hebron RS	Siskiyou	16	41.79	122 01	4250	92	60	88	59	82	57	42	-10	
Mount San Jacinto	Riverside	16	33.79	116 38	8417	82	56	77	55	73	53	35	-1	
Mount Shasta	Siskiyou	16	41.29	122 19	3535	93	62	89	61	84	59	34	8	5890
Mount Wilson	Los Angeles	16	34.20	118 04	5709	90	63	85	61	79	58	21	15	4296
Mountain Pass	San Bernardino	14	35.5	115 32	4730	100	65	96	64	92	63	29	11	
Mountain View	Santa Clara	4	37.5	121 54	95	93	67	85	64	77	62	25	28	
Nacimiento Dam	San Luis	4	35.79	120 53	770	100	68	94	66	88	64	35	22	
Napa State Hospital	Napa	2	37.29	122 16	60	94	67	91	67	86	66	29	26	2749
National City	San Diego	7	32.70	117 00	34	87	70	82	68	78	66	10	36	
Needles AP	San Bernardino	15	34.79	114 37	913	117	73	114	72	110	71	26	27	1391
Nevada City	Nevada	11	39.29	121 01	2600	97	66	94	64	88	63	41	14	4900
Newark	Alameda	3	37.5	122 02	10	94	68	89	67	82	65	24	29	
Newhall Soledad	Los Angeles	9	34.40	118 33	1243	104	70	100	68	95	67	42	27	
Newman	Stanislaus	12	37.29	121 03	90	104	71	99	69	93	67	38	22	
Newport Beach	Orange	6	33.59	117 53	10	87	68	80	66	72	65	12	34	1952
Norco	Riverside	10	33.90	117 00	700	103	70	99	69	94	67	34	27	
North Fork RS	Madera	16	37.20	119 30	2630	98	66	95	65	92	62	36	15	
North Highlands	Sacramento	12	38.59	121 25	45	104	71	100	69	94	67	35	23	2566
North Hollywood	Los Angeles	9	34.20	118 23	619	102	70	97	69	91	67	31	28	
Norwalk	Los Angeles	8	33.9		97	99	69	90	68	84	67	26	31	
Novato	Marin	2	38.09	122 31	370	94	64	87	63	80	61	30	25	
Oakdale	Stanislaus	12	37.79	120 52	215	102	71	99	69	93	67	37	22	
Oakland AP	Alameda	3	37.70	122 12	6	91	66	84	64	77	62	20	32	2909
Oakland Museum	Alameda	3	37.79	122 10	30	96	68	89	66	82	63	20	31	
Oceanside	San Diego	7	33.20	117 24	10	84	69	80	67	74	65	10	33	

City	County	ClimateZone	Latitude	Longitude (Degree Minute)	Elevation	SUMMER							Winter Minimum	HDD
						.1% Dry Bulb	.1% Wet Bulb	.5% Dry Bulb	.5% Wet Bulb	2% Dry Bulb	2% Wet Bulb	Range		
Oildale	Kern	13	35.5	119 00	450	106	71	102	70	98	68	34	26	
Ojai	Ventura	9	34.5	119 15	750	102	71	97	69	91	68	38	25	2145
Ontario AP	San Bernardino	10	34	117 00	934	105	70	101	69	95	66	34	26	1710
Orange	Orange	8	33.59	118 00	194	99	70	92	68	85	67	27	33	
Orange Cove	Fresno	13	36.59	119 18	431	104	71	100	69	97	68	38	25	2684
Orangevale	Sacramento	12	38.70	121 12	140	105	72	102	70	96	68	36	24	
Orick Prairie Creek	Humboldt	1	41.40	124 01	161	80	61	75	60	70	59	23	25	4816
Orinda	Contra Costa	12	37.90	122 10	550	99	68	93	66	86	64	32	21	
Orland	Glenn	11	39.79	122 12	254	105	71	102	70	97	68	36	22	2824
Orleans	Humboldt	2	41.29	123 32	403	104	70	97	68	91	66	42	21	3628
Oroville RS	Butte	11	39.5	121 33	300	106	71	104	70	98	69	37	25	
Otay-Castle Pk	San Diego	7	32.59	117 00	500	87	68	81	66	74	63	10	33	
Oxnard AFB	Ventura	6	34.20	119 11	49	94	69	86	68	79	67	21	30	2068
Pacific Grove	Monterey	3	36.70	122 00	114	87	66	78	63	71	61	19	31	
Pacifica	San Mateo	3	37.59	122 00	13	87	65	79	62	71	60	16	31	
Palm Desert	Riverside	15	33.70	116 30	200	116	74	112	73	108	72	34	26	
Palm Springs	Riverside	15	33.79	116 32	411	117	74	113	73	109	72	35	26	1109
Palmdale AP	Los Angeles	14	34.59	118 06	2517	107	67	103	67	98	64	33	12	2929
Palmdale CO	Los Angeles	14	34.59	118 06	2596	106	67	102	67	97	64	35	13	2908
Palo Alto	Santa Clara	4	37.5	122 08	25	93	66	85	64	77	62	25	26	2891
Palomar Obsy	San Diego	14	33.40	116 52	5545	90	62	85	61	80	59	22	16	4141
Palos Verdes	Los Angeles	6	33.79	119 00	216	92	69	84	68	78	66	14	38	
Paradise	Butte	11	39.79	121 36	1750	102	69	99	67	94	66	34	25	
Paramount	Los Angeles	8	33.90	117 00	70	98	70	90	69	84	67	22	32	
Parker Res	San Bernardino	15	34.29	114 10	738	115	74	112	73	108	72	26	32	1223
Pasadena	Los Angeles	9	34.20	118 09	864	99	69	94	68	88	67	30	32	1551
Paso Robles AP	San Luis	4	35.70	120 41	815	104	66	97	66	92	65	40	19	2973
Paso Robles CO	San Luis	4	35.59	120 41	700	102	65	95	65	90	65	44	16	2885
Pendleton MCB	San Diego	7	33.29	117 18	63	92	68	87	67	81	66	22	34	1532
Pendleton MCB Coast	San Diego	7	33.20	117 24	24	84	69	80	67	75	65	10	39	1782
Perris	Riverside	10	33.79	117 13	1470	105	70	101	69	97	68	39	22	
Petaluma FS 2	Sonoma	2	38.20	122 38	16	98	69	92	67	85	66	31	24	2959
Pico Rivera	Los Angeles	9	34	118 00	180	98	70	91	69	85	67	24	31	
Piedmont	Alameda	3	37.79	122 00	325	96	68	89	66	82	63	23	31	
Pinnacles NM	San Bernardino	14	36.5	121 11	1307	98	68	94	67	89	64	45	20	2956
Pinole	Contra Costa	3	38	122 18	10	91	66	87	65	82	64	25	30	
Pismo Beach	San Luis	5	35.09	120 37	80	92	66	85	64	80	62	16	30	2756
Pittsburg	Contra Costa	12	38	121 48	50	102	70	97	68	90	67	34	26	
Placentia	Orange	8	33.90	118 00	323	101	69	93	68	87	67	28	30	
Placerville	El Dorado	12	38.70	120 48	1890	101	67	98	66	93	65	42	20	4086
Placerville IFG	El Dorado	12	38.70	120 48	2755	100	66	97	65	92	64	42	23	
Platina	Shasta	11	40.40	122 53	2260	96	65	92	64	87	61	36	13	
Pleasant Hill	Contra Costa	12	37.90	122 00	102	96	68	93	67	88	65	34	25	
Pleasanton	Alameda	12	37.59	121 47	350	97	68	94	67	89	65	35	24	
Point Arena	Mendocino	1	38.90	123 44	100	76	62	72	60	67	58	19	29	4747
Point Arguello	Santa Barbara	5	34.59	120 40	76	75	64	71	63	65	59	17	29	3826
Point Mugu	Ventura	6	34.09	119 07	14	88	68	81	67	75	66	15	33	2328
Point Piedras Blancas	San Luis	5	35.70	121 17	59	73	60	67	59	61	57	10	36	3841
Pomona Cal Poly	Los Angeles	9	34.09	117 49	740	102	70	98	69	93	67	36	27	1971
Port Chicago ND	Contra Costa	12	38	122 01	50	98	69	94	68	88	66	34	28	

City	County	ClimateZone	Latitude	Longitude (Degree Minute)	Elevation	SUMMER							Winter Minimum	HDD
						.1% Dry Bulb	.1% Wet Bulb	.5% Dry Bulb	.5% Wet Bulb	2% Dry Bulb	2% Wet Bulb	Range		
Port Hueneme	Ventura	6	34.20	119 00	13	88	68	81	67	75	66	15	33	2334
Porterville	Tulare	13	36.09	119 01	393	106	71	102	70	97	69	36	25	2456
Portola	Plumas	16	39.79	120 28	4850	92	63	89	61	84	59	48	-9	7111
Posey 3 E	Tulare	13	35.79	119 00	4960	89	62	86	61	82	59	26	9	
Potter Valley PH	Mendocino	2	39.40	123 08	1015	101	68	96	67	89	65	40	20	3276
Poway Valley	San Diego	10	33	117 00	500	100	70	94	69	89	68	26	29	
Priest Valley	Monterey	4	36.20	120 42	2300	97	66	93	65	88	63	34	13	4144
Quincy	Plumas	16	39.90	120 56	3409	101	64	98	63	93	62	45	1	5763
Ramona Spaulding	San Diego	10	33.09	116 49	1480	103	70	97	69	92	68	40	22	
Rancho Cordova	Sacramento	12	38.59	121 18	190	104	72	100	69	94	68	35	26	
Rancho Palos Verdes	Los Angeles	6	33.70	118 10	216	92	69	84	68	78	66	14	38	
Randsburg	Kern	14	35.29	117 39	3570	105	67	102	66	97	65	30	19	2922
Red Bluff AP	Tehama	11	40.20	122 15	342	107	70	104	69	98	66	31	24	2688
Redding FS 4	Shasta	11	40.59	122 24	470	107	69	103	68	97	67	30	26	2544
Redlands	San Bernadino	10	34.09	117 11	1318	106	70	102	69	98	67	34	27	1993
Redondo Beach	Los Angeles	6	33.79	118 19	45	92	69	84	68	78	66	12	37	
Redwood City	San Mateo	3	37.5	122 14	31	90	67	86	66	81	64	28	28	2599
Reedley	Fresno	13	36.59	119 42	344	104	71	101	70	96	68	40	24	
Rialto	San Bernardino	10	34.09	117 00	1254	105	70	101	69	96	66	35	28	
Richardson Grove	Humbolt	2	40	123 47	500	96	67	92	66	87	64	28	25	
Richmond	Contra Costa	3	37.90	121 36	55	88	65	84	64	77	62	17	31	2684
Ridgecrest	Kern	14	35.59	117 48	2340	110	70	106	68	102	66	35	15	
Riverside Exp Sta	Riverside	10	34	117 23	986	106	71	102	69	97	67	36	29	
Riverside FS 3	Riverside	10	34	117 23	840	104	70	100	69	95	65	37	27	1818
Rocklin	Placer	11	38.79	121 14	239	108	72	104	70	99	69	39	20	3143
Rohnert Park	Sonoma	2	38.40	122 33	106	99	69	96	68	92	66	33	24	
Rolling Hills	Los Angeles	6	33.59	119 00	216	92	69	84	68	78	66	15	38	
Rosemead	Los Angeles	9	34	118 00	275	98	70	90	69	84	67	27	30	
Roseville	Placer	11	38.70	121 13	160	105	71	102	70	96	68	36	24	
Rossmoor	Orange	8	33.79		20	92	67	85	64	79	62	19	32	
Rowland Hts	Los Angeles	9	33.90	118 00	540	99	70	93	69	86	68	27	29	
Rubidoux	Riverside	10	34	117 00	792	106	71	102	70	97	68	36	27	
Sacramento AP	Sacramento	12	38.5	121 30	17	104	72	100	70	94	68	35	26	2843
Sacramento CO	Sacramento	12	38.59	121 30	84	104	71	100	70	94	68	32	30	
Saint Helena	Napa	2	38.5	122 28	225	102	70	98	69	93	67	40	22	2878
Saint Mary's College	Contra Costa	12	37.79	122 07	623	98	69	93	68	86	66	28	21	3543
Salinas 3 E	Monterey	3	36.70	121 36	85	86	66	83	65	79	62	20	26	
Salinas AP	Monterey	3	36.70	121 36	69	85	67	82	65	78	62	20	28	2959
Salt Springs PH	Amador/Calava	16	38.5	120 13	3700	95	62	92	61	87	59	27	19	3857
Salyer RS	Trinity	16	40.90	123 34	623	102	69	95	67	87	64	33	22	
San Anselmo	Marin	2	38	122 00	50	95	67	89	66	82	65	32	26	
San Antonio Canyon	Los Angeles	16	34.20	117 40	2394	100	68	96	67	90	65	33	29	
San Antonio Mission	Monterey	4	36	117 40	1060	99	69	94	68	88	67	28	19	
San Bernardino	San Bernardino	10	34.1	117 19	1125	106	70	102	69	98	68	39	27	1777
San Bruno	San Mateo	3	37.7	122 25	20	86	66	80	64	73	62	23	30	3042
San Carlos	San Mateo	3	37.5		26	92	67	88	65	82	63	28	28	
San Clemente	Orange	6	33.40	118 35	208	91	68	85	67	80	66	12	31	
San Diego AP	San Diego	7	32.70	117 10	13	88	70	83	69	78	68	13	38	1507
San Dimas	Los Angeles	9	34		955	102	70	98	69	92	67	35	30	
San Fernando	Los Angeles	9	34.29	118 28	977	104	71	99	70	94	68	37	30	1800

City	County	ClimateZone	Latitude	Longitude (Degree Minute)	Elevation	SUMMER							Winter Minimum	HDD
						.1% Dry Bulb	.1% Wet Bulb	.5% Dry Bulb	.5% Wet Bulb	2% Dry Bulb	2% Wet Bulb	Range		
San Francisco AP	San Francisco	3	37.59	122 23	8	89	66	83	64	74	61	20	31	3042
San Francisco CO	San Francisco	3	37.79	122 25	52	84	65	79	63	71	60	14	38	3080
San Gabriel FD	Los Angeles	9	34.09	118 06	450	99	70	94	69	88	68	30	30	1532
San Gregorio 2 SE	San Mateo	3	37.29		275	87	66	81	63	74	61	30	27	
San Jacinto	Riverside	10	33.79	116 58	1535	110	70	105	69	102	68	41	20	2376
San Jose	Santa Clara	4	37.40	121 56	67	94	68	86	66	78	64	26	29	2438
San Leandro	Alameda	3	37.70		45	89	67	83	64	76	62	22	28	
San Lorenzo	Alameda	3	37.70		45	89	67	83	64	76	62	23	28	
San Luis Dam	Merced	12	37.09		277	97	68	91	66	86	64	32	25	
San Luis Obispo	San Luis	5	35.29	120 43	320	94	63	87	63	81	62	26	30	2498
San Marino	Los Angeles	9	34.20		300	100	69	95	68	88	66	28	30	
San Mateo	San Mateo	3	37.5	122 18	21	92	67	84	65	76	63	24	31	2655
San Nicholas Island	Ventura	6	33.20	119 28	504	85	66	78	65	70	64	11	39	2454
San Pablo	Contra Costa	3	37.59		30	90	65	84	63	77	61	17	29	
San Pedro	Los Angeles	6	33.70	118 16	10	92	69	84	68	78	66	13	35	1819
San Rafael	Marin	2	38	122 33	40	96	67	90	65	83	63	29	30	2440
Sandberg	Los Angeles	16	34.79	118 44	4517	95	63	91	61	87	59	32	17	4427
Sanger	Fresno	13	36.70		364	105	72	101	70	96	68	37	24	
Santa Ana FS	Orange	8	33.79	117 50	115	98	70	91	68	84	67	26	33	1430
Santa Barbara AP	Santa Barbara	6	34.40	119 50	9	90	69	83	67	77	65	20	29	2487
Santa Barbara CO	Santa Barbara	6	34.40	119 41	5	91	69	84	67	78	65	22	33	1994
Santa Clara Univ	Santa Clara	4	37.40	121 56	88	90	67	87	65	82	63	30	29	2566
Santa Cruz	Santa Cruz	3	37	122 01	125	94	68	88	66	81	64	28	27	3136
Santa Fe Springs	Los Angeles	9	33.90		280	99	69	90	68	84	67	24	31	
Santa Maria AP	Santa Barbara	5	34.90	120 27	236	90	66	83	64	78	61	23	25	3053
Santa Monica	Los Angeles	6	34	118 30	15	85	67	78	66	72	64	15	39	1873
Santa Paula	Ventura	9	34.40		263	101	71	94	70	87	68	28	28	2030
Santa Rosa	Sonoma	2	38.5	122 49	167	99	69	96	68	92	66	35	24	2980
Santee	San Diego	10	32.79		400	96	69	91	68	87	67	20	25	
Saratoga	Santa Clara	4	37.29		500	96	67	88	66	80	65	31	27	
Sausalito	Sonoma	3	37.90		10	85	66	80	65	73	63	12	30	
Sawyer's Bar RS	Siskiyou	16	41.29		2169	100	66	95	65	88	62	38	14	4102
Scotia	Humboldt	1	40.5	124 22	139	78	61	74	60	69	58	19	28	3954
Seal Beach	Orange	6	33.79	118 05	21	94	69	86	68	80	65	15	35	1519
Seaside	Monterey	4	36.59		17	85	66	79	64	73	62	20	30	
Selma	Fresno	13	36.59		305	104	73	101	71	97	68	38	24	
Shafter	Kern	13	35.5	119 10	345	106	71	102	70	98	68	28	24	2185
Shasta Dam	Shasta	16	40.70		1076	105	69	101	68	95	67	27	29	2943
Shelter Cove	Humboldt	1	40	124 04	110	80	61	73	60	68	57	15	34	
Sierra City	Sierra	16	39.59	120 07	4230	96	62	93	61	89	59	43	12	
Sierra Madre	Los Angeles	9	34.20		1153	102	69	96	68	90	67	27	32	
Sierraville RS	Sierra	16	39.59	120 22	4975	94	60	91	59	86	57	44	-10	6893
Signal Hill	Los Angeles	6	33.5		100	99	70	90	69	84	66	19	35	
Simi Valley	Ventura	9	34.40		500	98	70	93	68	87	66	30	28	
Sonoma	Sonoma	2	38.29		70	101	70	96	69	90	67	40	22	2998
Sonora RS	Tuolumne	12	38	120 23	1749	103	68	100	67	95	66	34	20	3537
South El Monte	Los Angeles	9	34		270	101	72	97	70	91	68	28	31	
South Entr Yosemite	Tuolumne	16	37.5	119 38	5120	92	61	88	60	84	59	36	8	5789
South Gate	Los Angeles	8	33.90		120	97	70	90	69	84	67	21	32	
South Lake Tahoe	El Dorado	16	38.90		6200	85	56	82	55	71	54	33	-2	
South Pasadena	Los Angeles	9	34		657	99	69	94	68	88	67	30	31	

City	County	ClimateZone	Latitude	Longitude (Degree Minute)	Elevation	SUMMER							Winter Minimum	HDD
						.1% Dry Bulb	.1% Wet Bulb	.5% Dry Bulb	.5% Wet Bulb	2% Dry Bulb	2% Wet Bulb	Range		
South San Francisco	San Mateo	3	37.70		10	87	67	81	64	72	62	20	32	
South Whittier	Los Angeles	9	33.90		300	100	70	92	69	84	68	30	31	
Spring Valley	San Diego	10	32.70		300	94	69	86	68	82	66	30	34	
Squaw Valley	Placer	16	39.20		6235	88	57	85	56	80	54	40	-10	
Squirrel Inn	San Bernardino	14	34.20	117 14	5680	86	61	82	60	77	58	23	12	5175
Stanton	Orange	8	33.59		45	98	69	91	68	84	67	24	31	
Stockton AP	San Joaquin	12	37.90	121 15	22	103	71	98	69	93	67	35	24	2806
Stockton FS 4	San Joaquin	12	38	121 19	12	101	70	96	68	91	67	37	24	2846
Stony Gorge Res	Glenn	11	39.59	122 32	791	104	70	99	69	93	67	37	21	3149
Strawberry Valley	Tuolumne	16	39.59		3808	96	63	93	62	88	60	32	14	5120
Sunland	Los Angeles	9	34.29		1460	107	71	102	70	96	68	36	28	
Sunnyvale	Santa Clara	4	37.29	122 02	97	96	68	88	66	80	64	26	29	2511
Susanville AP	Lassen	16	40.40	120 34	4148	98	62	95	61	90	59	38	-1	6233
Tahoe City	Placer	16	39.20	120 08	6230	84	56	81	55	76	53	36	2	8085
Tahoe Valley AP	Placer	16	38.90		6254	85	56	82	55	77	53	38	-5	
Tehachapi	Kern	16	35.09		3975	97	66	93	65	89	64	33	13	4494
Tejon Rancho	Los Angeles	16	35	118 45	1425	107	71	103	70	99	68	27	24	2602
Temple City	Los Angeles	9	34.09		403	101	70	95	69	89	68	27	30	
Termo	Los Angeles	16	40.90		5300	95	60	92	59	87	57	37	-17	
Thermal AP	Riverside	15	33.59		-112	114	74	110	74	106	74	29	26	1154
Thousand Oaks	Ventura	9	34.20		810	98	69	93	68	88	67	30	27	
Three Rivers PH 1	Tulare	13	36.5		1140	105	70	102	69	98	67	38	24	2642
Tiburon	Marin	3	37.90		90	85	66	80	65	73	63	12	30	
Tiger Creek PH	Amador	12	38.5	120 29	2355	100	66	96	55	92	63	36	20	3795
Torrance	Los Angeles	6	33.79	118 20	110	93	69	86	68	80	66	18	32	1859
Tracy Carbona	San Joaquin	12	37.70		140	102	70	97	68	90	67	38	24	2704
Tracy Pumps	San Joaquin	12	37.79		61	104	71	99	69	92	68	39	23	
Travis AFB	Sonoma	12	38.29	121 56	72	103	71	98	69	91	66	35	24	2725
Trinity Dam	Trinity	16	40.79		2500	99	65	94	64	88	62	37	17	
Trona	San Bernardino	14	35.79	117 23	1695	113	72	109	70	105	68	35	18	2415
Truckee RS	Nevada	16	39.29	120 11	5995	90	58	87	57	82	55	40	-10	8230
Tujunga	Los Angeles	9	34.29		1820	103	70	99	69	94	67	36	20	
Tulare	Tulare	13	36.20		290	105	72	101	71	96	69	39	24	
Tulelake	Siskiyou	16	42		4035	92	60	88	59	83	57	41	-5	6854
Turlock	Stanislaus	12	37.5		100	104	72	100	70	95	68	40	24	
Turntable Creek	Plumas	16	40.79		1067	105	69	101	68	95	66	28	24	
Tustin Irvine Rch	Orange	8	33.70	117 47	118	99	71	92	69	85	68	27	28	1856
Twentynine Palms	San Bernardino	14	34.09	116 03	1975	110	71	107	70	103	69	31	21	1973
Twin Lakes	Mono	16	38.70		7829	73	49	64	47	57	46	30	-7	9196
Twitchell Dam	San Luis	5	35		582	99	70	93	68	88	66	26	26	
UCLA	Los Angeles	9	34.09		430	93	69	86	68	80	66	20	39	1509
Ukiah	Mendocino	2	39.20	123 12	623	100	70	97	69	92	68	42	22	2958
Union City	Alameda	3	37.6		5	90	67	87	66	81	63	20	25	
Upland	San Bernardino	10	34.1		1605	102	69	98	68	92	66	31	29	2175
Upper Lake RS	Lake	2	39.20	122 57	1347	98	68	95	67	91	64	39	18	
Upper San Leandro	Alameda	3	37.79		394	93	67	87	66	80	63	22	28	
Vacaville	Solano	12	38.40		105	103	71	100	70	94	68	40	23	2788
Valinda	Los Angeles	9	34		340	102	70	98	69	92	68	28	31	
Vallejo	Solano	3	38.09		85	93	67	90	66	84	64	23	28	
Valyermo RS	Los Angeles	14	34.5		3600	100	67	96	66	91	65	41	12	3870

City	County	ClimateZone	Latitude	Longitude (Degree Minute)	Elevation	SUMMER							Winter Minimum	HDD
						.1% Dry Bulb	.1% Wet Bulb	.5% Dry Bulb	.5% Wet Bulb	2% Dry Bulb	2% Wet Bulb	Range		
Vandenburg AFB	Santa Barbara	5	34.70	122 48	368	85	62	77	61	71	60	16	30	3451
Ventura	Ventura	6	34.29		341	89	68	82	67	76	66	15	29	
Victorville Pumps	San Bernardino	14	34.5		2858	105	67	101	65	97	62	39	14	3191
View Park	Los Angeles	6, 8	34		300	95	69	88	68	78	66	18	36	
Visalia	Tulare	13	36.29		325	103	71	100	70	96	69	38	25	2459
Vista	San Diego	7	33.20		510	96	69	90	68	85	67	16	30	
Volta PH	Merced	12	40.5		2220	101	66	98	65	93	63	33	21	
Walnut	Los Angeles	9	34		550	101	70	97	69	92	69	30	28	
Walnut Creek	Contra Costa	12	37.90		245	100	69	94	67	87	66	32	23	
Walnut Grove	Sacramento	12	38.20		23	102	70	98	69	92	68	37	24	
Warner Springs	San Diego	14	33.29		3180	100	67	95	66	91	65	40	15	3591
Wasco	Kern	13	35.59		333	105	71	101	70	97	68	36	23	2466
Watsonville	Santa Cruz	3	36.90		95	86	66	82	64	79	61	22	28	3418
Weaverville RS	Trinity	16	40.70		2050	100	67	95	66	89	63	46	10	4992
Weed FD	Siskiyou	16	41.40		3590	92	63	89	62	84	59	35	4	
West Carson	Los Angeles	9	33.79		100	92	69	87	68	81	66	18	32	
West Covina	Los Angeles	9	34		365	102	70	98	69	92	68	34	29	
West Hollywood	Los Angeles	9	34		290	95	70	89	69	82	67	20	38	
West Puente Valley	Los Angeles	9	34	117.93	250	101	70	97	69	91	68	26	31	
Westminster	Orange	6	33.79		38	95	70	88	68	81	67	23	33	
Whiskeytown Res	Shasta	11	40.59		1295	105	69	101	68	96	67	31	25	
White Mtn 1	Mono	16	37.5		10150	73	49	69	47	65	45	37	-15	
White Mtn 2	Mono	16	37.59		12470	61	42	58	41	54	40	38	-20	
Whittier	Los Angeles	9	34		320	99	69	90	68	84	67	24	31	
Wildrose RS	Inyo	16	36.29		4100	100	64	97	63	93	61	33	13	
Williams	Colusa	11	39.20		85	104	71	100	70	94	68	36	24	
Willits	Mendocino	2	39.40	123 19	1350	95	66	89	65	82	62	38	18	
Willow Brook	Los Angeles	8	33.90		60	97	70	90	69	83	67	21	35	
Willow Creek	Humboldt	2	41	123 38	461	104	70	98	68	92	66	35	22	
Willows	Colusa	11	39.5		140	104	71	100	70	94	68	36	22	2836
Winters	Yolo	12	38.5		135	104	71	99	70	93	68	38	24	2593
Woodfords	Alpine	16	38.79		5671	92	59	89	58	84	56	32	0	6047
Woodland	Yolo	12	38.70		69	106	72	101	71	96	69	40	25	2708
Woodside	San Mateo	3	37.5		75	92	67	84	66	76	63	24	22	
Yorba Linda	Orange	8	33.90		350	102	70	94	69	88	68	31	30	1643
Yosemite Park Hq	Mariposa	16	37.70		3970	97	63	94	62	90	60	38	11	4785
Yreka	Siskiyou	16	41.70		2625	99	66	95	65	90	64	39	8	5395
Yuba City	Sutter	11	39.09		70	105	69	101	69	96	68	36	24	
Yucaipa	San Bernardino	10	34		2600	106	68	102	67	98	65	35	27	

APPENDIX D
CLIMATE ZONE DESCRIPTIONS

The following pages are a listing of the climate zones associated with several thousand specific California cities, towns and other locations. This information represents an abridged version of the Commission publication *California Climate Zone Descriptions*, which contains detailed survey definitions of the sixteen climate zones (see Climate Zone Map, Section 1.4.)

A

Zone	Location:City, County
3	Abbotts Lagoon, Marin
13	Academy, Fresno
12	Acampo, San Joaquin
15	Acolita, Imperial
14	Actis, Kern
14	Acton, Los Angeles
4	Adelaida, San Luis Obispo
14	Adelanto, San Bernardino
6	Adin, Modoc
13	Adobe, Kern
14	Afton, San Bernardino
6	Ager, Siskiyou
9	Agoura Hills, Los Angeles
5	Agua Caliente Canyon, Santa Barbara
15	Agua Caliente Springs, San Diego
9	Agua Duice, Los Angeles
10	Aguanga, Riverside
13	Ahwahnee, Madera
14	Airport Lake, Inyo
4	Almaden A.F.S., Santa Clara
3	Alameda, Alameda
12	Alameda County
12	Alamo, Contra Costa
15	Alamo River, Imperial
3	Albany, Alameda
10	Alberhill, Riverside
1	Albion, Mendocino
2	Alderpoint, Humboldt
9	Alhambra, Los Angeles
3	Alisal, Monterey
3	Alisal Slough, Monterey
16	Aliso Canyon, Los Angeles
6	Alleghany, Sierra
12	Allendale, Solano
13	Allensworth, Tulare
16	Almanor, Plumas
6	Alondra Park, Los Angeles
13	Alpaugh, Tulare
16	Alpine County
10	Alpine, San Diego
16	Alta, Placer
10	Alta Loma, San Bernardino
16	Alta Sierra, Kern
9	Altadena, Los Angeles
12	Altamont, Alameda
12	Altaville, Calaveras
6	Alton, Humboldt
16	Alturas, Modoc
4	Alviso, Santa Clara
12	Amador, Amador
12/16	Amador County
14	Amargosa Range, Inyo
14	Amargosa River, Inyo
15	Amboy, San Bernardino
16	Ambrose, Modoc
2	American Canyon, Napa
12	American River, Sacramento
16	American River (Silver Fork), El Dorado
15	Amos, Imperial
6	Anacapa Island, Ventura
8	Anaheim, Orange
1	Anchor Bay, Mendocino
11	Anderson, Shasta
4	Anderson Lake, Santa Clara
15	Andrade, Imperial
3	Angel Island, Marin
12	Angels Camp, Calaveras
13	Angiola, Tulare
2	Angwin, Napa
1	Annapolis, Sonoma
12	Antelope, Sacramento
14	Antelope Center, Los Angeles
16	Antelope Lake, Plumas
13	Antelope Plain, Kern
14	Antelope Valley, Los Angeles
12	Antioch, Contra Costa
16	Anza, Riverside
16	Anpache Canyon, Ventura
14	Apple Valley, San Bernardino
11	Applegate, Placer
3	Aptos, Santa Curz
15	Araz Wash, Imperial
11	Arbuckle, Colusa
9	Arcadia, Los Angeles
1	Arcata, Humboldt
1	Arcata Bay, Humboldt
12	Arden Town, Sacramento
14	Argus, San Bernardino
16	Argus Peak, Inyo
16	Argus Range, Inyo
10	Arlington, Riverside
13	Armona, Kings
16	Arnold, Calaveras
2	Arnold, Mendocino
3	Aromas, Monterey
14	Arrowhead Junction, San Bernardino
4	Arryo Dos Picachos, San Benito
5	Arryo Grande, San Luis Obispo
13	Arroyo Hondo, Fresno
4	Arroyo Hondo, Santa Clara
15	Arroyo Salada, Imperial
4	Arroyo Seco, Monterey
8	Artesia, Los Angeles
11	Artois, Glenn
13	Arvin, Kern
16	Aspen Valley, Tuolumne
2	Asti, Sonoma
4	Atascadero, San Luis Obispo
3	Atherton, San Mateo
12	Athlone, Merced
14	Atolia, San Bernardino
12	Atwater, Merced
13	Auberry, Fresno
11	Auburn, Placer
11	Auburn Ravine, Sutter
12	Aukum, El Dorado
6	Avalon, Los Angeles
14	Avawatz Mountains, San Bernardino
13	Avenal, Kings
5	Avila Beach, San Luis Obispo
9	Azusa, Los Angeles

B

Zone	Location:City, County
12	Bagby, Mariposa
15	Bagdad, San Bernardino
13	Badger, Tulare
14	Baker, San Bernardino
13	Bakersfield, Kern
14	Balch, San Bernardino
16	Bald Eagle Mountain, Plumas
9	Baldwin Park, Los Angeles
14	Ballarat, Inyo
2	Ballico, Merced
11	Bangor, Butte
15	Banning, Riverside
12	Banta, San Joaquinn
15	Bard, Imperial
9	Bardsdale, Ventura
2	Barkerville, Lake
16	Barkley Mountain, Tehama
10	Barona, San Diego
10	Barrett Junction, San Diego
14	Barstow, San Bernardino
16	Bartle, Siskiyou
16	Bartlett, Inyo
2	Bartlett Springs, Lake
16	Bass Lake, Madera
9	Bassett, Los Angeles
16	Baxter, Placer
16	Bayley, Modoc
11	Bayliss, Glenn
1	Bayside, Humboldt
5	Baywood Park, San Luis Obispo
11	Beale Air Force Base, Yuba
2	Bear Buttes, Humboldt
16	Bear River, Amador
1	Bear River, Humboldt
11	Bear River, Sutter/Yuba
12	Bear Valley, Mariposa
16	Beardsley Lake, Tuolumne
10	Beaumont, Riverside
16	Beckwourth, Plumas
16	Beckwourth Pass, Lassen/Plumas
11	Beegum, Shasta
16	Belden, Plumas
8	Bell, Los Angeles
8	Bell Gardens, Los Angeles
14	Bell Mountain, San Bernardino
14	Bell Mountain Wash, San Bernardino
2	Bell Springs, Mendocino
4	Bell Station, Santa Clara
11	Bella Vista, Shasta
8	Bellflower, Los Angeles
12	Bellota, San Joaquin
3	Belmont, San Mateo
3	Belvedere, Marin
12	Ben Hur, Mariposa
3	Ben Lomond, Santa Cruz
2	Benbow, Humboldt

Zone	Location:City, County
11	Bend, Tehama
12	Benicia, Solano
14	Bennetts Well, Inyo
16	Benton, Mono
16	Benton Hot Springs, Mono
13	Berenda, Madera
3	Berkeley, Alameda
11	Berry Creek, Butte
4	Berryessa, Santa Clara
2/3	Berryessa Peak, Napa/Yolo
16	Beswick, Siskiyou
12	Bethany, San Joaquin
12	Bethel Island, Contra Costa
5	Betteravia, Santa Barbara
9	Beverly Hills, Los Angeles
16	Bieber, Lassen
16	Big Bar, Trinity
3	Big Basin, Santa Cruz
16	Big Bear City, San Bernardino
16	Big Bear Lake, San Bernardino
16	Big Bend, Butte
16	Big Bend, Shasta
2	Big Bend, Sonoma
16	Big Creek, Fresno
1	Big Lagoon, Humboldt
16	Big Lake, Shasta
15	Big Maria Mountains, Riverside
2	Big Mountains, Sonoma
12	Big Oak Flat, Tuolumne
16	Big Pine, Inyo
16	Big Pines, Los Angeles
14	Big Rock Wash, Los Angeles
16	Big Sage Reservoir, Modoc
16	Big Springs, Siskiyou
4	Big Sur, Monterey
4	Big Sur River (North Fork), Monterey
16	Big Tujungs Canyon, Los Angeles
16	Big Valley Mountains, Lassen/Modoc
11	Biggs, Butte
16	Bijou, El Dorado
13	Biola, Fresno
12	Birds Landing, Solano
16	Bishop, Inyo
14	Bissell, Kern
4	Bitterwater, San Benito
16	Black Bear, Siskiyou
16	Black Butte, Glenn
11	Black Butte Reservoir, Glenn/Tehama
16	Black Butte River, Mendocino
14	Black Canyon Wash, San Bernardino
15	Black Meadow Landing, San Bernardino
13	Black Mountain, Fresno
2	Black Point, Marin
13	Blackwells Corner, Kern
16	Blairsden, Plumas
2	Blocksburg, Humboldt
2	Bloomfield, Sonoma
10	Bloomington, San Bernardino
11	Blossom, Tehama
16	Blue Canyon, Placer
1	Blue Lake, Humboldt
11	Blunt, Tehama
15	Blythe, Riverside
16	Boca, Nevada
16	Boca Reservoir, Nevada
1	Bodega, Sonoma
3	Bodega Bay, Marin
1	Bodega Bay, Sonoma
1	Bodega Head, Sonoma
16	Bodfish, Kern
16	Bodie, Mono
16	Bolam, Siskiyou
3	Bolinas, Marin
16	Bollibokka Mountain, Shasta
3	Bolsa Knolls, Monterey
15	Bombay Beach, Imperial
16	Bonanza King, Trinity
15	Bonds Corner, Imperial
13	Bonita, Madera
3	Bonny Doon, Santa Cruz
10	Bonsall, San Diego
2	Boonville, Mendocino
12	Bootjack, Mariposa
14	Boron, Kern
15	Borrego, San Diego
15	Borrego Springs, San Diego
10	Bostonia, San Diego
3	Boulder Creek, Santa Cruz
14	Boulevard, San Diego
13	Bowles, Fresno
11	Bowman, Placer
15	Box Canyon, Riverside
2	Boyes Hot Springs, Sonoma
9	Bradbury, Los Angeles
4	Bradley, Monterey
1	Branscomb, Mendocino
14	Brant, San Bernardino
15	Brawley, Imperial
16	Bray, Siskiyou
8	Brea, Orange
16	Breckenridge Mountain, Kern
12	Brentwood, Contra Costa
12	Briceburg, Mariposa
2	Briceland, Humboldt
12	Bridge House, Sacramento
16	Bridgeport, Mono
16	Bridgeport Reservoir, Mono
2	Bridgeville, Humboldt
12	Briones Reservoir, Contra Costa
3	Brisbane, San Mateo
15	Bristol Lake, San Bernardino
14	Bristol Mountains, San Bernardino
12	Broderick, Yolo
3	Brookdale, Santa Cruz
12	Brooks Ranch, Yolo
14	Brown, Kern
11	Browns Valley, Yuba
11	Brownsville, Yuba
1	Bruhel Point, Mendocino
16	Brush Creek, Butte
14	Bryman, San Bernardino
4	Bryson, Monterey
12	Bryte, Yolo
16	Buck Meadows, Mariposa
11	Buckeye, Shasta
14	Buckhorn Lake, Kern
16	Bucks Lake, Plumas
14	Budweiser Wash, San Bernardino
5	Buellton, Santa Barbara
8	Buena Park, Orange
12	Buena Vista, Amador
13	Buena Vista Lake Bed, Kern
1	Bull Creek, Humboldt
14	Bull Spring Wash, San Bernardino
14	Bullion Mountains, San Bernardino
16	Buntingville, Lassen
9	Burbank, Los Angeles
2	Burbeck, Mendocino
2	Burdell, Marin
3	Burlingame, San Mateo
16	Burney, Shasta
16	Burney Mountain, Shasta
16	Burnt Ranch, Trinity
13	Burrelield, Fresno
12	Burson, Calaveras
1	Butler Valley, Humboldt
11	Butte City, Glenn
11/16	Butte County
16	Butte Meadows, Butte
16	Butte Valley, Siskiyou
13	Buttonwillow, Kern
12	Byron, Contra Costa

C

15	Cabazon, Riverside
15	Cadiz, San Bernardino
15	Cadiz Lake, San Bernardino
15	Cadiz Valley, San Bernardino
14	Cady Mountains, San Bernardino
2	Cahto Peak, Mendocino
16	Cahuilla, Riverside
16	Cajon Junction, San Bernardino
16	Cajon Summit, San Bernardino
9	Calabasas, Los Angeles
14	Calada, San Bernardino
12/16	Calaveras County
12/4	Calaveras Reservoir, Alameda/Santa Clara
12	Calaveras River, San Joaquin
12	Calaveritas, Calaveras
13	Calders Corner, Kern
15	Calexico, Imperial
13	Calflax, Fresno
16	Caliente, Kern
4	Caliente Range, San Luis Obispo
14	California City, Kern
16	California Hot Springs, Tulare

Zone	Location:City, County
4	California Valley, San Luis Obispo
10	Calimesa, Riverside
15	Calipatria, Imperial
2	Calistoga, Napa
16	Callahan, Siskiyou
16	Calneva, Lassen
2	Calpella, Medocino
16	Calpine, Sierra
13	Calwa, Fresno
12	Camanche Reservoir, Amador/Calaveras
6	Camarillo, Ventura
5	Cambria, San Luis Obispo
12	Cameron Park, El Dorado
12	Camino, El Dorado
14	Camino, San Bernardino
16	Camp Angelus, San Bernardino
11	Camp Far West Reservoir, Yuba
2	Camp Meeker, Sonoma
16	Camp Nelson, Tulare
16	Camp Richardson, El Dorado
4	Campbell, Santa Clara
14	Campo, San Diego
12	Campo Seco, Calaveras
16	Camptonville, Yuba
16	Canby, Modoc
9	Canoga Park, Los Angeles
14	Cantil, Kern
10	Canyon Lake, Riverside
16	Canyondam, Plumas
12	Capay, Yolo
1	Cape Mendocino, Humboldt
5	Cape San Martin, Monterey
1	Capetown, Humboldt
6	Capistrano Beach, Orange
6	Capitan, Santa Barbara
3	Capitola, Santa Cruz
16	Caples Lake, Alpine
12	Carbona, San Joaquin
12	Carbondale, Amador
7	Cardiff-by-the-Sea, San Diego
16	Caribou, Plumas
1	Carlotta, Humboldt
7	Carlsbad, San Diego
3	Carmel-by-the-Sea, Monterey
3	Carmel Highlands, Monterey
3	Carmel Valley, Monterey
12	Carmichael, Sacramento
16	Carnelian Bay, Placer
6	Carpinteria, Santa Barbara
16	Carr Butte, Modoc
4	Carrizo Plain, San Luis Obispo
15	Carrizo Wash, Imperial
16	Carrville, Trinity
6	Carson, Los Angeles
16	Carson River (East Fork), Alpine
16	Carson River (West Fork), Alpine
16	Cartago, Inyo
13	Caruthers, Fresno
16	Cascade Range, Siskiyou
9	Casitas Springs, Ventura
5	Casmalia, Santa Barbara
1	Caspar, Mendocino
16	Cassel, Shasta
9	Castaic, Los Angeles
16	Castella, Shasta
12	Castle Air Force Base, Merced
3	Castro Valley, Alameda
3	Castroville, Monterey
16	Caswell, Los Angeles
15	Cathedral City, Riverside
12	Catheys Valley, Mariposa
11	Catlett, Sutter
16	Cayton, Shasta
5	Cayucos, San Luis Obispo
1	Cazadero, Sonoma
16	Cecilville, Siskiyou
16	Cedar Grove, Fresno
11	Cedar Ridge, Nevada
14	Cedar Wash, San Bernardino
16	Cedarville, Modoc
13	Centerville, Fresno
1	Centerville, Humboldt
11	Centerville, Shasta
11	Central Valley, Shasta
12	Ceres, Stanislaus
8	Cerritos, Los Angeles
4	Cerro Alto, San Luis Obispo
16	Cerro Gordo Peak, Inyo
16	Chalfant, Mono
16	Challenge, Yuba
15	Chambless, San Bernardino
16	Chanchelulla Peak, Trinity
9	Chatsworth, Los Angeles
12	Chemurgic, Stanislaus
11	Cherokee, Butte
16	Cherry Lake, Tuolumne
10	Cherry Valley, Riverside
16	Chester, Plumas
11	Chicago Park, Nevada
11	Chico, Butte
16	Chidago Canyon, Mono
16	Chilcoot, Plumas
14	China Lake, San Bernardino
14	China Lake, Kern
16	China Peak, Trinity
12	Chinese Camp, Tuolumne
10	Chino, San Bernardino
10	Chino Hills, San Bernardino
14	Chiriaco Summit, Riverside
16	Chloride City, Inyo
4	Cholame, San Luis Obispo
4	Cholame Hills, Monterey
13	Chowchilla, Madera
13	Chowchilla Canal, Madera
11	Chrome, Glenn
3	Chualar, Monterey
15	Chubbuck, San Bernardino
14	Chuckwalla Mountains, Riverside
15	Chuckwalla Valley, Riverside
7	Chula Vista, San Diego
14	Cima, San Bernardino
16	Cisco, Placer
12	Citrus Heights, Sacramento
9	City Terrace, Los Angeles
16	Clair Engle Lake, Trinity
16	Claraville, Kern
9	Claremont, Los Angeles
14	Clark Mountain, San Bernardino
12	Clarksburg, Yolo
12	Clarksville, El Dorado
16	Clavey River, Tuolumne
12	Clay, Sacramento
12	Clayton, Contra Costa
16	Clear Creek, Lassen
2	Clearlake, Lake
16	Clear Lake Reservoir, Modoc
2	Clearlake Highlands, Lake
2	Clearlake Oaks, Lake
2	Clearlake Park, Lake
12	Clements, San Joaquin
1	Cleone, Mendocino
16	Clio, Plumas
11	Clipper Gap, Placer
16	Clipper Mills, Butte
11	Cloverdale, Shasta
2	Cloverdale, Sonoma
13	Clovis, Fresno
15	Clyde, Imperial
15	Coachella, Riverside
15	Coachella Valley, Riverside
13	Coalinga, Fresno
13	Coarsegold, Madera
2	Cobb, Lake
4	Coburn, Monterey
11	Codora, Glenn
11	Cohasset, Butte
16	Cold Springs, Tuolumne
16	Coleville, Mono
11	Colfax, Placer
11	College City, Colusa
12	Collegeville, San Joaquin
12	Collierville, San Joaquin
12	Collinsville, Solano
3	Colma, San Mateo
12	Coloma, El Dorado
15	Colorado River, San Bernardino
10	Colton, San Bernardino
12	Columbia, Tuolumne
11	Colusa, Colusa
12	Colusa Basin Drainage Canal, Yolo
11	Colusa County
11	Colusa Trough, Colusa
8	Commerce, Los Angeles
1	Comptche, Mendocino
8	Compton, Los Angeles
6	Concepcion, Santa Barbara
12	Concord, Contra Costa
16	Condrey Mountain, Siskiyou
13	Conejo, Fresno
13	Conner, Kern
16	Constantia, Lassen
3/12	Contra Costa County
16	Cooks Station, Amador
12	Cool, El Dorado

Zone	Location:City, County
16	Copco, Siskiyou
12	Copperopolis, Calaveras
13	Corcoran, Kings
13	Corcoran Reservoir, Kings
12	Cordelia, Solano
6	Cornell, Los Angeles
16	Cornell, Modoc
11	Corning, Tehama
11	Corning Canal, Tehama
10	Corona, Riverside
6	Corona Del Mar, Orange
7	Coronado, San Diego
12	Corral Hollow, Alameda San Joaquin
3	Corralitos, Santa Cruz
2	Corte Madera, Marin
16	Coso Hot Springs, Inyo
16	Coso Junction, Inyo
16	Coso Peak, Inyo
16	Coso Range, Inyo
6	Costa Mesa, Orange
12	Cosumnes River, Sacramento
2	Cotati, Sonoma
8	Coto De Caza, Orange
16	Cottage Grove, Siskiyou
11	Cottonwood, Shasta
14/16	Cottonwood Canyon, Inyo
16	Cottonwood Mountains, Inyo
14	Cottonwood Wash, San Bernardino
16	Cougar, Siskiyou
12	Coulterville, Mariposa
12	Courtland, Sacramento
16	Courtright Reservoir, Fresno
2	Covelo, Mendocino
9	Covina, Los Angeles
16	Covington Mill, Trinity
16	Cow Head Lake, Modoc
16	Cowtrack Mountain, Mono
4	Coyote, Santa Clara
14	Coyote Lake, San Bernardino
15	Coyote Wash, Imperial
11	Cranmore, Sutter
1	Crannell, Humboldt
16	Crater Mountain, Lassen
1	Crescent City, Del Norte
16	Crescent Mills, Plumas
12	Cressey, Merced
16	Crestline, San Bernardino
4	Creston, San Luis Obispo
16	Crestview, Mono
12	Crockett, Contra Costa
16	Cromberg, Plumas
15	Cross Roads, San Bernardino
12	Crows Landing, Stanislaus
14	Crucero, San Bernardino
12	Crystal Springs Reservoir, San Mateo
10	Cucamonga, San Bernardino
8	Cudahy, Los Angeles
14	Cuddeback Lake, San Bernardino
16	Cuddy Canyon, Kern/Ventura
4	Cuesta Pass, San Luis Obispo
8	Culver City, Los Angeles
2	Cummings, Mendocino
2	Cunningham, Sonoma
4	Cupertino, Santa Clara
16	Curtis, Siskiyou
13	Cutler, Tulare
1	Cutten, Humboldt
4	Cuyama, Santa Barbara
4	Cuyama Valley, San Luis Obispo/Santa Barbara
14	Cuyamaca Peak, San Diego
8	Cypress, Orange

D

Zone	Location:City, County
14	Daggett, San Bernardino
13	Dairyland, Madera
11	Dairyville, Tehama
14	Dale Lake, San Bernardino
11	Dales, Tehama
16	Dalton, Modoc
3	Daly City, San Mateo
16	Dana, Shasta
6	Dana Point, Orange
14	Danby, San Bernardino
15	Danby Lake, San Bernardino
12	Danville, Contra Costa
16	Dardanelle, Tuolumne
12	Darrah, Mariposa
16	Darwin, Inyo
16	Darwin Wash, Inyo
13	Daulton, Madera
3	Davenport, Santa Cruz
12	Davis, Yolo
16	Davis Creek, Modoc
14	Dawes, San Bernardino
16	Day, Modoc
11	Dayton, Butte
10	De Luz, San Diego
11	De Sabla, Butte
16	Deadwood, Trinity
14	Death Valley, Inyo
14	Death Valley Junction, Inyo
14	Death Valley Wash, Inyo
16	Dedrick, Trinity
15	Deep Canyon, Riverside
6	Deep Springs, Inyo
16	Deep Springs Lake, Inyo
12	Deep Water Ship Channel, Solano/Yolo
16	Deetz, Siskiyou
10	Del Dios, San Diego
16	Del Loma, Trinity
7	Del Mar, San Diego
1/16	Del Norte County
12	Del Paso Heights, Sacramento
13	Del Rey, Fresno
3	Del Rey Oaks, Monterey
16	Del Rosa, San Bernardino
13	Delano, Kern
11	Delevan, Colusa
12	Delhi, Merced
16	Delleker, Plumas
16	Delta, Shasta
12	Denair, Stanislaus
16	Denny, Trinity
12	Denverton, Solano
13	Derby Acres, Kern
14	Descanso, San Diego
14	Desert, San Bernardino
15	Desert Beach, Riverside
15	Desert Center, Riverside
15	Desert Hot Springs, Riverside
15	Desert Shores, Imperial
14	Desert View Highland, Los Angeles
16	Devils Canyon, Los Angeles
13	Devils Den, Kern
14	Devils Playground, San Bernardino
14	Devils Playground Wash, San Bernardino
10	Devore, San Bernardino
13	Di Giorgio, Kern
12	Diablo, Contra Costa
4	Diablo Range, Santa Clara
9	Diamond Bar, Los Angeles
16	Diamond Mountains, Lassen/Plumas
12	Diamond Springs, El Dorado
3	Dillon Beach, Marin
16	Dinkey Creek, Fresno
2	Dinsmores, Humboldt
13	Dinuba, Tulare
12	Discovery Bay, Contra Costa
16	Dixie Mountain, Plumas
15	Dixieland, Imperial
12	Dixon, Solano
11	Dobbins, Yuba
16	Dolomite, Inyo
8	Dominguez, Los Angeles
16	Donner Pass, Nevada/Placer
16	Dorrington, Calaveras
16	Dorris, Siskiyou
15	Dos Cabezas, San Diego
12	Dos Palos, Merced
2	Dos Rios, Mendocino
16	Douglas City, Trinity
8	Downey, Los Angeles
16	Downie River, Sierra
16	Downieville, Sierra
16	Doyle, Lassen
12	Dozler, Solano
6	Drake, Santa Barbara
3	Drakes Bay, Marin
3	Drakes Estero, Marin
16	Drakesbad, Plumas
16	Dry Canyon, Ventura
12	Drytown, Amador
9	Duarte, Los Angeles
12	Dublin, Alameda
13	Ducor, Tulare
15	Duguynos Canyon, San Diego
10	Dulzura, San Diego
16	Duncan Canyon, Placer

Zone	Location:City, County
1	Duncans Mills, Sonoma
13	Dunlap, Fresno
16	Dunmovin, Inyo
12	Dunnigan, Yolo
16	Dunsmuir, Siskiyou
11	Durham, Butte
15	Durmid, Riverside
16	Dutch Flat, Placer
16	Dwinnell Reservoir, Siskiyou
	E
14	Eagle Crags, San Bernardino
16	Eagle Lake, Lassen
16	Eagle Lake Resort, Lassen
14	Eagle Mountain, Riverside
14	Eagle Mountains, Riverside
16	Eagle Peak, Modoc
16	Eagleville, Modoc
13	Earlimart, Tulare
15	Earp, San Bernardino
11	East Biggs, Butte
10	East Highlands, San Bernardino
8	East Irvine, Orange
9	East Los Angeles, Los Angeles
15	East Mesa, Imperial
11	East Nicolaus, Sutter
3	East Palo Alto, San Mateo
11	East Park Reservoir, Colusa
16	East Quincy, Plumas
16	East Walker River, Mono
9	East Whittier, Los Angeles
13	Easton, Fresno
16	Ebbetts Pass, Alpine
2	Echo, Mendocino
14	Echo Canyon, Inyo
16	Echo Lake, El Dorado
16	Echo Summit, El Dorado
16	Eder, Placer
10	Edgemont, Riverside
16	Edgewood, Siskiyou
13	Edison, Kern
5	Edna, San Luis Obispo
14	Edwards Air Force Base, Kern
2	Eel Rock, Humboldt
10	El Cajon, San Diego
14	El Capitan Reservoir, San Diego
15	El Centro, Imperial
3	El Cerrito, Contra Costa
12	El Dorado, El Dorado
12/16	El Dorado County
12	El Dorado Hills, El Dorado
3	El Granada , San Mateo
14	El Mirage, San Bernardino
14	El Mirage Lake, San Bernardino
9	El Monte, Los Angeles
12	El Nido, Merced
14	El Paso Mountains, Kern
16	El Portal, Mariposa
6	El Rio, Ventura
6	El Segundo, Los Angeles
3	El Sobrante, Contra Costa
8	El Toro, Orange
2	El Verano, Sonoma
11	Elders Corner, Placer
13	Elderwood, Tulare
16	Elizabeth Lake Canyon, Los Angeles
1	Elk, Mendocino
13	Elk Bayou, Tulare
11	Elk Creek, Glenn
12	Elk Grove, Sacramento
1	Elk River, Humboldt
1	Elk River (North Fork), Humboldt
1	Elk River (South Fork), Humboldt
3	Elkhorn Slough, Monterey
12	Elmira, Solano
10	Elsinore, Riverside
12	Elverta, Sacramento
6	Emerald Bay, Orange
14	Emerson Lake, San Bernardino
3	Emeryville, Alameda
16	Emigrant Canyon, Inyo
16	Emigrant Gap, Placer
12	Empire, Stanislaus
10	Encanto, San Diego
7	Encinitas, San Diego
9	Encino, Los Angeles
11	Enterprise, Shasta
16	Erickson, Siskiyou
12	Escalon, San Joaquin
10	Escondido, San Diego
12	Esparto, Yolo
14	Essex, San Bernardino
5	Estero Bay, San Luis Obispo
4	Estrella, San Luis Obispo
4	Estrella River, San Luis Obispo
1	Etiwanda, San Bernardino
16	Etna, Siskiyou
16	Etsel Ridge, Mendocino
1	Ettersburg, Humboldt
12	Eugene, Stanislaus
1	Eureka, Humboldt
16	Eureka Valley, Inyo
13	Exeter, Tulare
	F
12	Fair Oaks, Sacramento
2	Fairfax, Marin
12	Fairfield, Solano
13	Fairmead, Madera
14	Fairmont, Los Angeles
16	Fairview, Tulare
2	Fairville, Sonoma
16	Fales Hot Springs, Mono
1	Falk, Humboldt
16	Fall River, Shasta
16	Fall River Mills, Shasta
10	Fallbrook, San Diego
16	Fallen Leaf Lake, El Dorado
3	Fallon, Marin
13	Famoso, Kern
16	Fandango Pass, Modoc
1	Farallon Island, San Francisco
13	Farmersville, Tulare
12	Farmington, San Joaquin
16	Fawnskin, San Bernardino
16	Feather Falls, Butte
11	Feather River, Sutter
16	Feather River (Middle Fork), Butte
16	Feather River (North Fork), Butte
13	Fellows, Kern
3	Felton, Santa Cruz
14	Fenner, San Bernardino
14	Fenner Valley, San Bernardino
15	Ferguson Lake, Imperial
11	Fern, Shasta
1	Fernbridge, Humboldt
10	Fernbrook, San Diego
1	Ferndale, Humboldt
12	Fiddletown, Amador
1	Fieldbrook, Humboldt
1	Fields Landing, Humboldt
13	Figarden, Fresno
9	Fillmore, Ventura
2	Finley, Lake
13	Firebaugh, Fresno
16	Fish Camp, Mariposa
16	Fish Springs, Inyo
13	Five Points, Fresno
16	Fletcher, Modoc
8	Florence, Los Angeles
16	Florence Lake, Fresno
16	Florence Peak, Tulare
12	Florin, Sacramento
16	Floriston, Nevada
11	Flournoy, Tehama
14	Flynn, San Bernardino
12	Folsom, Sacramento
10	Fontana, San Bernardino
12	Foothill Farms, Sacramento
16	Forbestown, Butte
13	Ford City, Kern
15	Ford Dry Lake, Riverside
16	Forest, Sierra
16	Forest Falls, San Bernardino
16	Forest Glen, Trinity
16	Forest Hill Divide, Placer
2	Forest Knolls, Marin
11	Forest Ranch, Butte
16	Foresthill, Placer
2	Forestville, Sonoma
16	Forks of Salmon, Siskiyou
3	Fort Baker, Marin
16	Fort Bidwill, Modoc
1	Fort Bragg, Mendocino
1	Fort Dick, Del Norte
16	Fort Goff, Siskiyou
16	Fort Jones, Siskiyou
7	Fort MacArthur, San Diego
3	Fort Ord, Monterey
1	Fort Ross, Sonoma
2	Fort Seward, Humboldt
1	Fortuna, Humboldt

Zone	Location:City, County
14	Fossil Canyon, San Bernardino
3	Foster City, San Mateo
13	Fountain Springs, Tulare
13	Fountain Springs Gulch, Tulare
6	Fountain Valley, Orange
12	Fourth Crossing, Calaveras
11	Fouts Springs, Colusa
13	Fowler, Fresno
5	Foxen Canyon, Santa Barbara
12	Franklin, Sacramento
14	Franklin Well, Inyo
16	Frazier Mountain, Ventura
16	Frazier Park, Kern
16	Fredonyer Peak, Lassen
3	Freedom, Santa Cruz
16	Freel Peak, Alpine/El Dorado
14	Freeman Junction, Kern
12	Freeport, Sacramento
2	Freestone, Sonoma
3	Fremont, Alameda
14	Fremont Peak, San Bernardino
14	Fremont Valley, Kern
14	Fremont Wash, San Bernardino
12	French Camp, San Joaquin
11	French Corral, Nevada
11	French Gulch, Shasta
16	Frenchman Lake, Plumas
1	Freshwater, Humboldt
13	Fresno, Fresno
13/16	Fresno County
13	Fresno Slough, Fresno
13	Friant, Fresno
13	Friant Dam, Madera
14	Fried Liver Wash, Riverside
15	Frink, Imperial
11	Fruto, Glenn
8	Fullerton, Orange
2	Fulton, Sonoma
14	Funeral Park, Inyo
14	Furnace Creek Wash, Inyo

G

Zone	Location:City, County
12	Galt, Sacramento
16	Ganns, Calaveras
2	Garberville, Humboldt
12	Garden Acres, San Joaquin
8	Garden Grove, Orange
12	Garden Valley, El Dorado
8	Gardena, Los Angeles
5	Garey, Santa Barbara
14	Garlock, Kern
11	Gas Point, Shasta
16	Gasquet, Del Norte
6	Gaviota, Santa Barbara
6	Gaviota Pass, Santa Barbara
16	Gazelle, Siskiyou
16	Genesee, Plumas
14	George A.F.B., San Bernardino
12	Georgetown, El Dorado
11	Gerber, Tehama
2	Geyserville, Sonoma
16	Giant Forest, Tulare
16	Gibson Peak, Trinity
16	Gibsonville, Sierra
10	Gillman Hot Springs, Riverside
4	Gilroy, Santa Clara
11	Girvan, Shasta
16	Glacier, Inyo
15	Glamis, Imperial
14	Glasgow, San Bernardino
16	Glass Mountain, Mono
10	Glen Avon, Riverside
2	Glen Ellen, Sonoma
16	Glenburg, Shasta
12	Glencoe, Calaveras
9	Glendale, Los Angeles
9	Glendora, Los Angeles
2	Glenhaven, Lake
11	Glenn, Glenn
11	Glenn Colusa Canal, Colusa
16/11	Glenn County
16	Glennville, Kern
14	Goffs, San Bernardino
16	Gold Canyon, Kern
15	Gold Rock Rch, Imperial
16	Gold Run, Placer
3	Golden Gate, San Francisco Marin
14	Goldstone, San Bernardino
14	Goldstone Lake, San Bernardino
6	Goleta, Santa Barbara
3	Gonzales, Monterey
16	Goodyears Bar, Sierra
16	Goose Lake, Modoc
16	Goosenest, Siskiyou
3	Gorda, Monterey
16	Gordon Mountain, Del Norte
15	Gordons Well, Imperial
16	Gorman, Los Angeles
13	Goshen, Tulare
16	Goumaz, Lassen
10	Grand Terrace, San Bernardino
13	Grangeville, Kings
11	Granite Bay, Placer
16	Granite Chief, Placer
14	Granite Mountains, San Bernardino
16	Graniteville, Nevada
16	Grant Grove, Tulare
16	Grant Lake, Mono
13	Grapevine, Kern
16	Grass Lake, Siskiyou
11	Grass Valley, Nevada
2	Graton, Sonoma
12	Grayson, Stanislaus
16	Green Valley, Los Angeles
16	Green Valley Lake, San Bernardino
13	Greenacres, Kern
13	Greenfield, Kern
4	Greenfield, Monterey
16	Greenhorn Mountains, Kern/Tulare
16	Greenview, Siskiyou
16	Greenville, Plumas
14	Greenwater Range, Inyo
12	Greenwood, El Dorado
11	Greenwood, Glenn
16	Grenada, Siskiyou
11	Gridley, Butte
11	Grimes, Colusa
12	Grizzly Bay, Solano
16	Grizzly Flat, El Dorado
15	Grommet, San Bernardino
7	Grossmont, San Diego
16	Grouse Mountain, Modoc
12	Groveland, Tuolumne
5	Grover City, San Luis Obispo
5	Grover Beach, San Luis Obispo
16	Grover Hot Springs, Alpine
5	Guadalupe, Santa Barbara
1	Gualala, Mendocino
1	Gualala River (South Fork), Mendocino
14	Guatay, San Diego
2	Guerneville, Sonoma
13	Guernsey, Kings
12	Guinda, Yolo
3	Gulf of the Farallones, Marin/San Francisco
12	Gustine, Merced

H

Zone	Location:City, County
2	Hacienda, Sonoma
9	Hacienda Heights, Los Angeles
16	Hackamore, Modoc
16	Haiwee Reservoir, Inyo
1	Hales Grove, Mendocino
16	Half Dome, Mariposa
3	Half Moon Bay, San Mateo
14	Halloran Springs, San Bernardino
16	Halls Flat, Lassen
16	Hambone, Siskiyou
16	Hamburg, Siskiyou
2	Hamilton A.F.B., Marin
11	Hamilton City, Glenn
11	Hammonton, Yuba
13	Hanford, Kings
16	Happy Camp, Siskiyou
10	Harbinson Canyon, San Diego
8	Harbor City, Los Angeles
16	Harden Flat, Tuolumne
13	Hardwick, Kings
5	Harmony, San Luis Obispo
2	Harris, Humboldt
14	Harper Lake, San Bernardino
14	Hart, San Bernardino
16	Hat Creek, Shasta
16	Hathaway Pines, Calaveras
15	Havasu Lake, San Bernardino
16	Havilah, Kern
8	Hawaiian Gardens, Los Angeles
14	Hawes, San Bernardino
16	Hawkinsville, Siskiyou
8	Hawthorne, Los Angeles
16	Hayden Hill, Lassen

Zone	Location:City, County
14	Hayfield, Riverside
14	Hayfield Lake, Riverside
16	Hayfork, Trinity
16	Hayfork Bally, Trinity
3	Hayward, Alameda
2	Healdsburg, Sonoma
2	Hearst, Mendocino
15	Heber, Imperial
14	Hector, San Bernardino
16	Helena, Trinity
14	Helendale, San Bernardino
13	Helm, Fresno
10	Hemet, Riverside
2	Henderson Village, San Joaquin
11	Henleyville, Tehama
12	Herald, Sacramento
3	Hercules, Contra Costa
16	Herlong, Lassen
13	Herndon, Fresno
6	Hermosa Beach, Los Angeles
14	Hesperia, San Bernardino
12	Hetch Hetchy Junction, Tuolumne
16	Hetch Hetchy Reservoir, Tuolumne
14	Hi Vista, Los Angeles
12	Hickman, Stanislaus
9	Hidden Hills, Los Angeles
16	Hidden Springs, Los Angeles
11	Hidden Valley, Placer
11	Higgins Corner, Nevada
11	High Peak, Glenn
10	Highgrove, Riverside
10	Highland, San Bernardino
8	Highland Park, Los Angeles
16	Highland Peak, Alpine
13	Highway City, Fresno
16	Hillcrest Center, Kern
12	Hills Ferry, Stanislaus
3	Hillsborough, San Mateo
12	Hilmar, Merced
16	Hilt, Siskiyou
14	Hinkley, San Bernardino
1	Hiouchi, Del Norte
16	Hobart Mills, Nevada
2	Hobergs, Lake
14	Hodge, San Bernardino
4	Hog Canyon, San Luis Obispo
16	Hollenbeck, Modoc
4	Hollister, San Benito
9	Hollywood, Los Angeles
6	Hollywood-by-the-Sea, Ventura
1	Holmes, Humboldt
12	Holt, San Joaquin
15	Holtville, Imperial
10	Home Gardens, Riverside
10	Homeland, Riverside
14	Homer, San Bernardino
14	Homer Wash, San Bernardino
16	Homewood, Placer
11	Honcut, Butte
5	Honda, Santa Barbara
16	Honey Lake, Lassen
1	Honeydew, Humboldt
12	Honker Bay, Solano
12	Hood, Sacramento
11	Hooker, Tehama
2	Hoopa, Humboldt
12	Hopeton, Merced
2	Hopland, Mendocino
16	Hornbrook, Siskiyou
12	Hornitos, Mariposa
16	Horse Creek, Siskiyou
16	Horse Flat, Del Norte
16	Horse Lake, Lassen
16	Hotlum, Siskiyou
5	Huasna, San Luis Obispo
5	Huasna River, San Luis Obispo
12	Hughson, Stanislaus
1	Humboldt Bay, Humboldt
1/2/16	Humboldt County
16	Hume, Fresno
13	Humphreys Station, Fresno
6	Huntington Beach, Orange
16	Huntington Lake, Fresno
8	Huntington Park, Los Angeles
1	Hupa Mountain, Humboldt
13	Huron, Fresno
16	Hyampom, Trinity
1	Hydesville, Humboldt

I

Zone	Location:City, County
4	Idria, San Benito
1	Idlewild, Del Norte
16	Idyllwild, Riverside
11	Igo, Shasta
15	Imperial, Imperial
7	Imperial Beach, San Diego
14/15	Imperial County
15	Imperial Dam, Imperial
15	Imperial Reservoir, Imperial
15	Imperial Valley, Imperial
15	Inca, Riverside
16	Independence, Inyo
15	Indian Wells, Riverside
14	Indian Wells Valley, Kern
15	Indio, Riverside
9	Industry, Los Angeles
1	Inglenook, Mendocino
8	Inglewood, Los Angeles
12	Ingomar, Merced
11	Ingot, Shasta
16	Inskip, Butte
11	Inskip Hill, Tehama
1	Inverness, Marin
11	Inwood, Shasta
14/16	Inyo County
16	Inyo Mountains, Inyo
14	Inyokern, Kern
12	Ione, Amador
16	Iowa Hill, Placer
15	Iris, Imperial
5	Irish Hills, San Luis Obispo
11	Iron Mountain, Shasta
8	Irvine, Orange
12	Irwin, Merced
9	Irwindale, Los Angeles
16	Isabella Reservoir, Kern
6	Isla Vista, Santa Barbara
2	Island Mountain, Trinity
12	Isleton, Sacramento
13	Ivanhoe, Tulare
14	Ivanpah, San Bernardino
14	Ivanpah Lake, San Bernardino
14	Ivanpah Valley, San Bernardino
13	Ivesta, Fresno

J

Zone	Location:City, County
12	Jackson, Amador
16	Jackson Meadows Reservoir, Nevada/Sierra
12	Jacksonville, Tuolumne
14	Jacumba, San Diego
15	Jacumba Mountains, San Diego
5	Jalama, Santa Barbara
13	Jamesan, Fresno
4	Jamesburg, Monterey
12	Jamestown, Tuolumne
10	Jamul, San Diego
16	Janesville, Lassen
13	Jasmin, Kern
15	Java, San Bernardino
16	Jellico, Lassen
1	Jenner, Sonoma
12	Jenny Lind, Calaveras
16	Jerome, Siskiyou
16	Jess Valley, Modoc
2	Jimtown, Sonoma
14	Johannesburg, Kern
16	Johnsondale, Tulare
1	Johnsons, Humboldt
16	Johnstonville, Lassen
16	Johnsville, Plumas
8	John Wayne AP
4	Jolon, Monterey
16	Jonesville, Butte
11	Josephine, Sutter
14	Joshua Tree, San Bernardino
14	Julian, San Diego
16	Junction City, Trinity
16	June Lake, Mono
14	Juniper Hills, Los Angeles
4	Junipero Serra Peak, Monterey

K

Zone	Location:City, County
16	Kalser Peak, Fresno
16	Kandra, Modoc
16	Karlo, Lassen
13	Kaweah, Tulare
16	Kaweah River (Middle Fork), Tulare
16	Kearsarge, Inyo
13	Kecks Corner, Kern
16	Keddie, Plumas
16	Keddie Ridge, Plumas
16	Keeler, Inyo

Zone	Location:City, County
16	Keene, Kern
2	Kekawaka, Trinity
12	Kelsey, El Dorado
2	Kelseyville, Lake
14	Kelso, San Bernardino
14	Kelso Wash, San Bernardino
2	Kentfield, Marin
2	Kenwood, Sonoma
16	Keough Hot Springs, Inyo
16	Kephart, Modoc
13	Kerman, Fresno
13/14/16	Kern County
16	Kern River (South Fork), Kern
13	Kern River Channel, Kings
16	Kernville, Kern
11	Keswick, Shasta
2	Kettenpom, Trinity
13	Kettleman City, Kings
13	Kettleman Hills, Kings
12	Keyes, Stanislaus
4	King City, Monterey
1	King Range, Humboldt
16	Kings Beach, Placer
13	Kings County
13	Kings River, Fresno/Kings
16	Kings River (Middle Fork), Fresno
16	Kings River (North Fork), Fresno
16	Kings River (South Fork), Fresno
13	Kingsburg, Fresno
14	Kingston Peak, San Bernardino
14	Kingston Wash, San Bernardino
16	Kinyon, Siskiyou
11	Kirkville, Sutter
11	Kirkwood, Sutter
13	Kismet, Madera
1	Klamath, Del Norte
1	Klamath Glen, Del Norte
16	Klamath Mountains, Siskiyou
16	Klamath River, Siskiyou
16	Klamathon, Siskiyou
14	Klondike, San Bernardino
1	Kneeland, Humboldt
12	Knights Ferry, Stanislaus
12	Knights Landing, Yolo
12	Knightsen, Contra Costa
16	Knob, Shasta
13	Knowles, Madera
2	Knoxville, Napa
14	Koehn Lake, Kern
1	Korbel, Humboldt
14	Kramer Junction, San Bernardino
16	Kyburz, El Dorado

L

Zone	Location:City, County
16	L.L. Anderson Reservoir, Placer
11	La Barr, Nevada
9	La Canada Flintridge, Los Angeles
9	La Crescenta, Los Angeles
12	La Grange, Stanislaus
8	La Habra, Orange
9	La Habra Heights, Los Angeles
3	La Honda, San Mateo
7	La Jolla, San Diego
7	La Mesa, San Diego
9	La Mirada, Los Angeles
8	La Palma, Orange
4	La Panza Range, San Luis Obispo
16	La Porte, Plumas
9	La Puente, Los Angeles
15	La Quinta, Riverside
3	La Selva Beach, Santa Cruz
9	La Verne, Los Angeles
13	La Vina, Madera
12	Lafayette, Contra Costa
6	Laguna Beach, Orange
15	Laguna Dam, Imperial
6	Laguna Hills, Orange
6	Laguna Niguel, Orange
16	Lake Almanor, Plumas
16	Lake Alpine, Alpine
16	Lake Arrowhead, San Bernardino
2	Lake Berryessa, Napa
16	Lake Britton, Shasta
5	Lake Cachuma, Santa Barbara
9	Lake Casitas, Ventura
16	Lake City, Modoc
2	Lake County
16	Lake Crowley, Mono
16	Lake Davis, Plumas
12	Lake Del Valley, Alameda
1	Lake Earl, Del Norte
16	Lake Eleanor, Tuolumne
10	Lake Elsinore, Riverside
8	Lake Forest, Orange
15	Lake Havasu, San Bernardino
2	Lake Henessey, Napa
14	Lake Henshaw, San Diego
16	Lake Isabella, Kern
13	Lake Kaweah, Tulare
10	Lake Mathews, Riverside
12	Lake McClure, Mariposa
2	Lake Mendocino, Mendocino
16	Lake Mountain, Siskiyou
11	Lake Oroville, Butte
10	Lake Perris, Riverside
2	Lake Pillsbury, Lake
16	Lake Spaulding, Nevada
13	Lake Success, Tulare
16	Lake Tahoe, El Dorado/Placer
11	Lake Wyandotte, Butte
16	Lakehead, Shasta
10	Lakeland Village, Riverside
2	Lakeport, Lake
16	Lakeshore, Fresno
10	Lakeside, San Diego
13	Lakeview, Kern
10	Lakeview, Riverside
2	Lakeville, Sonoma
8	Lakewood, Los Angeles
16	Lamoine, Shasta
13	Lamont, Kern
13	Lanare, Fresno
14	Lancaster, Los Angeles
14	Landers, San Bernardino
14	Lane Mountain, San Bernardino
14	Lanfair Valley, San Bernardino
2	Larkspur, Marin
5	Las Cruces, Santa Barbara
7	Las Flores, San Diego
11	Las Plumas, Butte
16	Lassen County
16	Lassen Peak, Shasta
14	Last Chance Canyon, Kern
16	Last Chance Range, Inyo
12	Lathrop, San Joaquin
13	Laton, Fresno
12	Latrobe, El Dorado
16	Lava Beds, Modoc
14	Lavic, San Bernardino
14	Lavic Lake, San Bernardino
8	Lawndale, Los Angeles
16	Laws, Inyo
12	Le Grand, Merced
14	Leach Lake, San Bernardino
16	Leavitt, Lassen
16	Leavitt Peak, Mono/Tuolumne
16	Lebec, Kern
16	Lee Vining, Mono
16	Lee Wash, Inyo
16	Leech Lake Mountain, Mendocino
11	Leesville, Colusa
1	Leggett, Mendocino
7	Lemon Grove, San Diego
13	Lemoncove, Tulare
13	Lemoore, Kings
8	Lennox, Los Angeles
14	Lenwood, San Bernardino
14	Leona Valley, Los Angeles
7	Leucadia, San Diego
16	Lewiston, Trinity
16	Lewiston Lake, Trinity
12	Liberty Farms, Solano
12	Libfarm, Solano
16	Likely, Modoc
11	Lincoln, Placer
12	Lincoln Village, San Joaquin
11	Linda, Yuba
7	Linda Vista, San Diego
13	Lindcove, Tulare
12	Linden, San Joaquin
13	Lindsay, Tulare
16	Litchfield, Lassen
14	Little Dixie Wash, Kern
16	Little Grass Valley Reservoir, Plumas
16	Little Kern River, Tulare
16	Little Lake, Inyo
13	Little Panoche, Fresno
1	Little River, Humboldt
1	Little River, Mendocino
4	Little Rock Wash, Los Angeles

16	Little Shasta, Siskiyou	16	Lower Klamath Lake, Siskiyou	12	Mather Air Force Base, Sacramento
16	Little Shasta River, Siskiyou	2	Lower Lake, Lake		
16	Little Truckee River, Sierra	16	Lower Lake, Modoc	11	Matheson, Shasta
16	Little Valley, Lassen	10	Loert Otay Reservoir, San Diego	16	Matterhorn Peak, Mono/Tuolumne
16	Little Walker River, Mono	11	Lowrey, Tehama		
14	Littlerock, Los Angeles	16	Loyalton, Sierra	1	Mattole River, Humboldt
3	Live Oak, Santa Cruz	2	Lucerne, Lake	1	Mattole River (North Fork), Humboldt
11	Live Oak, Sutter	14	Lucerne Lake, San Bernardino		
14	Live Oak Springs, San Diego	14	Lucerne Valley, San Bernardino	1	Mattole River (South Fork), Humboldt
12	Livermore, Alameda	3	Lucia, Monterey		
12	Livingston, Merced	14	Ludlow, San Bernardino	11	Maxwell, Colusa
4	Llanada, San Benito	8	Lynwood, Los Angeles	16	May, Siskiyou
14	Llano, Los Angeles	16	Lyonsville, Tehama	2	Mayacmas Mountains, Lake/Mendocino
12	Lockeford, San Joaquin	16	Lytle Creek, San Bernardino		
14	Lockhart, San Bernardino	2	Lytton, Sonoma	8	Maywood, Los Angeles
4	Lockwood, Monterey			16	McArthur, Modoc
16	Loco, Inyo		**M**	16	McArthur, Shasta
16	Lodgepole, Lassen			2	McCann, Humboldt
12	Lodi, San Joaquin	16	Macdoel, Siskiyou	12	McClellan Air Force Base, Sacramento
11	Lodoga, Colusa	16	Madeline, Lassen		
11	Logandale, Glenn	16	Madeline Plains, Lassen	16	McCloud, Siskiyou
1	Loleta, Humboldt	13	Madera, Madera	16	McCloud River, Shasta
10	Loma Linda, San Bernardino	13	Madera Canal, Madera	15	McCoy Wash, Riverside
3	Loma Mar, San Mateo	13/16	Madera County	16	McDonald Peak, Lassen
4	Loma Prieta, Santa Clara	12	Madison, Yolo	13	McFarland, Kern
11	Loma Rica, Yuba	11	Magalia, Butte	16	McGee Canyon, Mono
6	Lomita, Los Angeles	2	Mail Ridge, Humboldt	1	McKinleyville, Humboldt
16	Lomo, Butte	13	Malaga, Fresno	13	McKittrick, Kern
11	Lomo, Sutter	6	Malibu, Los Angeles	4	McMillan Canyon, San Luis Obispo
5	Lompoc, Santa Barbara	16	Mammoth, Modoc		
16	Lone Pine, Inyo	16	Mammoth Lakes, Mono	16	Meadow Lakes, Fresno
16	Lone Tree Canyon, Kern	16	Mammoth Pool Reservoir, Fresno/Madera	16	Meadow Valley, Plumas
16	Long Barn, Tuolumne			11	Meadow Vista, Placer
6/8	Long Beach, Los Angeles	15	Mammoth Wash, Imperial	16	Meares, Modoc
2	Longvale, Mendocino	1	Manchester, Mendocino	15	Mecca, Riverside
4	Lonoak, Monterey	6	Manhattan Beach, Los Angeles	16	Meeks Bay, El Dorado
16	Lookout, Modoc			9	Meiners Oaks, Ventura
16	Lookout Junction, Modoc	14	Manix, San Bernardino	16	Meiss Lake, Siskiyou
11	Loomis, Placer	16	Manley Peak, Inyo	12	Melones Reservoir, Calaveras/Tuolumne
16	Loon Lake Reservoir, El Dorado	12	Manteca, San Joaquin		
5	Lopez Lake, San Luis Obispo	16	Manton, Tehama	1	Mendocino, Mendocino
16	Loraine, Kern	16	Manzanita Lake, Shasta	1/2/3/16	Mendocino County
8	Los Alamitos, Orange	1	Maple Creek, Humboldt	13	Mendota, Fresno
5	Los Alamos, Santa Barbara	16	Marble Canyon, Inyo	3	Menlo Park, San Mateo
4	Los Altos, Santa Clara	10	March A.F.B., Riverside	10	Mentone, San Bernardino
4	Los Altos Hills, Santa Clara	3	Mare Island Naval Facility, Solano	12	Merced, Merced
9	Los Angeles, Los Angeles			12	Merced County
6/8/9/14/16	Los Angeles County	10	Margarita Peak, San Diego	12	Merced Falls, Merced
12	Los Banos, Merced	13	Maricopa, Kern	12	Merced River, Merced
12	Los Banos Reservoir, Merced	3	Marin City, Marin	16	Merced River (South Fork), Mariposa
5	Los Berros Canyon, San Luis Obispo	2/3	Marin County		
		3	Marina, Monterey	11	Meridian, Sutter
4	Los Gatos, Santa Clara	12	Mariposa, Mariposa	11	Merle Collins Reservoir, Yuba
11	Los Molinoss, Tehama	12/16	Mariposa County	14	Mesa Grande, San Diego
9	Los Nietos, Los Angeles	16	Markleeville, Alpine	15	Mesaville, Riverside
5	Los Olivos, Santa Barbara	1	Marshall, Marin	14	Mesquite Lake, San Bernardino
5	Los Osos, San Luis Obispo	12	Martell, Amador	13	Mettler, Kern
13	Lost Hills, Kern	12	Martinez, Contra Costa	4	Metz, Monterey
16	Lost River, Modoc	15	Martinez Canyon, Riverside	16	Meyers, El Dorado
16	Lostman Spring, Inyo	11	Marysville, Yuba	16	Michigan Bluff, Placer
12	Lotus, El Dorado	16	Mason Station, Lassen	16	Middle Alkali Lake, Modoc
16	Lower Bear River Reservoir, San Diego	16	Massack, Plumas	12	Middle River, San Joaquin
		16	Mather, Tuolumne	12	Middle River Town, San Joaquin

Zone	Location:City, County
16	Middle Tuolumne River, Tuolumne
16	Middle Yuba River, Nevada/Yuba
2	Middletown, Lake
15	Midland, Riverside
16	Midpines, Mariposa
12	Midway, Alameda
14	Midway, San Bernardino
14	Midway Well, Inyo
16	Milford, Lassen
16	Mill Creek, Tehama
3	Mill Valley, Marin
3	Millbrae, San Mateo
14	Miller Spring, Inyo
13	Millerton Lake, Fresno/Madera
15	Milligan, San Bernardino
11	Millville, Shasta
13	Milo, Tulare
4	Milpitas, Santa Clara
12	Milton, Calaveras
2	Mina, Mendocino
16	Mineral, Tehama
16	Mineral King, Tulare
14	Minneola, San Bernardino
9	Mira Canyon, Los Angeles
10	Mira Loam, Riverside
16	Miracle Hot Springs, Kern
3	Miramar, San Mateo
7	Miramar Naval Air Station, San Diego
13	Miramonte, Fresno
2	Miranda, Humboldt
7	Mission Bay, San Diego
8	Mission Viejo, Orange
14	Mitchell Caverns, San Bernardino
12	Mi-Wuk Village, Tuolumne
16	Moccasin, Plumas
12	Moccasin, Tuolumne
12	Modesto, Stanislaus
12	Modesto Reservoir, Stanislaus
8	Modjeska, Orange
16	Modoc County
4	Moffett Field Naval Air Station, Santa Clara
14	Mojave, Kern
14	Mojave River, San Bernardino
14	Jojave River Forks Reservoir, San Bernardino
12	Mokelumne Hill, Calaveras
12	Mokelumne River, San Joaquin
13	Monmouth, Fresno
16	Mono County
16	Mono Hot Springs, Fresno
16	Mono Lake, Mono
16	Monolith, Kern
9	Monrovia, Los Angeles
13	Monson, Tulare
4	Monta Vista, Santa Clara
16	Montague, Siskiyou
6	Montalvo, Ventura
3	Montara, San Mateo
10	Montclair, San Bernardino
6	Monte Nido, Los Angeles
2	Monte Rio, Sonoma
4	Monte Sereno, Santa Clara
9	Montebello, Los Angeles
6	Montecito, Santa Barbara
3	Monterey, Monterey
3	Monterey Bay, Monterey /Santa Cruz
3/4	Monterey County
9	Monterey Park, Los Angeles
12	Montezume, Solano
12	Montezuma Slough, Solano
16	Montgomery Creek, Shasta
12	Montpelier, Stanislaus
9	Montrose, Los Angeles
14	Monument Peak, San Diego
16	Moon Lake, Lassen
9	Moorpark, Ventura
12	Morada, San Joaquin
12	Moraga, Contra Costa
4	Morales Canyon, San Luis Obispo
14	Morena VIllage, San Diego
10	Moreno Valley, Riverside
4	Morgan Hill, Santa Clara
12	Mormon Bar, Mariposa
12	Mormon Slough, San Joaquin
14	Morongo Valley, San Bernardino
11	Morrison Slough, Sutter
5	Morro Bay, San Luis Obispo
3	Moss Beach, San Mateo
3	Moss Landing, Monterey
16	Mount Baldy, San Bernardino
12	Mount Bullion, Mariposa
4	Mount Carmel, Monterey
16	Mount Darwin, Fresno/Inyo
12	Mount Diablo, Contra Costa
16	Mount Eddy, Siskiyou/Trinity
3	Mount Eden, Alameda
4	Mount Hamilton, Santa Clara
16	Mount Hebron, Siskyou
3	Mount Hermon, Santa Clara
16	Mount Hoffman, Siskiyou
2	Mount Konocti, Lake
14	Mount Laguna, San Diego
2	Mount Lassic, Humboldt
16	Mount Lyell, Madera/Mono
16	Mount Morgan, Inyo
16	Mount Patterson, Mono
16	Mount Pinchot, Fresno
16	Mount Pinos, Ventura
2	Mount Saint Helena, Napa/Sonoma
16	Mount San Antonio, Los Angeles/ San Bernardino
16	Mount San Jacinto, Riverside
16	Mount Shasta, Siskiyou
15	Mount Signal, Imperial
16	Mount Vida, Modoc
16	Mount Whitney, Inyo/Tulare
16	Mount Wilson, Los Angeles
16	Mount Center, Riverside
11	Mountain Gate, Shasta
16	Mountain Meadows Reservoir, Lassen
14	Mountain Pass, San Bernardino
12	Mountain Ranch, Calaveras
15	Mountain Spring, Imperial
4	Mountain View, Santa Clara
16	Mugginsville, Siskiyou
12	Murphys, Calaveras
10	Murrieta, Riverside
10	Muscoy, San Bernardino
2	Myers Flat, Humboldt

N

4	Nacimiento Reservoir, San Luis Obispo
4	Nacimiento River, San Luis Obispo
2	Napa, Napa
2	Napa County
2	Napa Junction, Napa
6	Naples, Santa Barbara
2	Nashmead, Mendocino
7	National City, San Diego
2	Navarro, Mendocino
13	Navelencia, Fresno
15	Needles, San Bernardino
11	Nelson, Butte
14	Neuralia, Kern
11	Nevada City, Nevada
11/16	Nevada County
4	New Almaden, Santa Clara
13	New Auberry, Fresno
16	New Bullards Bar Reservoir, Yuba
4	New Cuyama, Santa Barbara
12	New Don Pedro Reservoir, Tuolumne
12	New Exchequer Dam, Mariposa
12	New Hogan Reservoir, Calaveras
13	New London, Tulare
16	New River, Trinity
3	Newark, Alameda
14	Newberry Springs, San Bernardino
9	Newbury Park, Ventura
11	Newcastle, Placer
16	Newell, Modoc
9	Newhall, Los Angeles
12	Newman, Stanislaus
6	Newport Bay, Orange
6	Newport Beach, Orange
11	Newville, Glenn
2	Nicasio, Marin
2	Nice, Lake
15	Nicholls Warm Springs, Riverside
15	Nicolaus, Sutter
16	Nightingale, Riverside
15	Niland, Imperial
12	Nimbus, Sacramento

Zone	Location:City, County
12	Nippinnawasee, Madera
5	Nipomo, San Luis Obispo
14	Nipton, San Bernardino
14	Nopah Range, Inyo
10	Norco, Riverside
11	Nord, Butte
16	Norden, Nevada
16	North Bloomfield, Nevada
11	North Columbia, Nevada
14	North Edwards, Kern
16	North Fork, Madera
12	North Highlands, Sacramento
9	North Hollywood, Los Angeles
15	North Palm Springs, Riverside
12	North Sacramento, Sacramento
11	North San Juan, Nevada
16	North Yolla Bolly Mountains, Tehama
16	North Yuba River, Yuba
9	Northridge, Los Angeles
2	Northspur, Mendocino
10	Norton AFB, San Bernardino
16	Norvell, Lassen
8	Norwalk, Los Angeles
3	Notleys Landing, Monterey
2	Novato, Marin
16	Nubieber, Lassen
10	Nuevo, Riverside

O

14	Oak Grove, San Diego
9	Oak Ridge, Ventura
11	Oak Run, Shasta
9	Oak View, Ventura
12	Oakdale, Stanislaus
13	Oakhurst, Madera
3	Oakland AP, Alameda
12	Oakley, Contra Costa
2	Oakville, Napa
16	Oasis, Mono
15	Oasis, Riverside
16	Obie, Shasta
16	O'Brien, Shasta
16	Observation Peak, Lassen
2	Occidental, Sonoma
7	Ocean Beach, San Diego
1	Ocean View, Sonoma
5	Oceano, San Luis Obispo
7	Oceanside, San Diego
15	Ocotillo, Imperial
15	Ocotillo Wells, San Diego
15	Ogilby, Imperial
13	Oildale, Kern
13	Oilfields, Fresno
9	Ojai, Ventura
6	Olancha, Inyo
16	Olancha Peak, Inyo/Tulare
14	Old Dale, San Bernardino
13	Old River, Kern
12	Old River, Contra Costa /San Joaquin
16	Old Station, Shasta
3	Olema, Marin
11	Olinda, Shasta
11	Olivehurst, Yuba
16	Omo Ranch, El Dorado
13	O'Neals, Madera
12	O'Neill Forebay, Merced
11	Ono, Shasta
10	Ontario, San Bernardino
16	Onyx, Kern
3	Opal Cliffs, Santa Cruz
8	Orange, Orange
6/8	Orange County
13	Orange Cove, Fresno
12	Orangevale, Sacramento
13	Orchard Peak, Kern
5	Orcutt, Santa Barbara
14	Ord Mountain, San Bernardino
11	Ordbend, Glenn
11	Oregon House, Yuba
16	Oregon Peak, Yuba
12	Orestimba Peak, Stanislaus
1	Orick, Humboldt
12	Orinda, Contra Costa
15	Orita, Imperial
11	Orland, Glenn
2	Orleans, Humboldt
16	Oro Fino, Siskiyou
14	Oro Grande, San Bernardino
14	Oro Grande Wash, San Bernardino
13	Oro Loma, Fresno
13	Orosi, Tulare
11	Oroville, Butte
7	Otay, San Diego
12	Outingdale, El Dorado
16	Owens Lake, Inyo
16	Owens River, Inyo
16	Owens Valley, Inyo
16	Owenyo, Inyo
14	Owlshead Mountains, Inyo/San Bernardino
13	Oxalis, Fresno
12	Oxford, Solano
6	Oxnard, Ventura
6	Oxnard Beach, Ventura

P

12	Pacheco, Contra Costa
4	Pacheco Pass, Santa Clara
16	Pacific, El Dorado
7	Pacific Beach, San Diego
3	Pacific Grove, Monterey
6	Pacific Palisades, Los Angeles
3	Pacifica, San Mateo
16	Pacoima Canyon, Los Angeles
14	Pahrump Valley, Inyo
4	Paicines, San Benito
16	Paiute Canyon, Inyo
10	Pala, San Diego
15	Palen Lake, Riverside
15	Palen Mountains, Riverside
11	Palermo, Butte
15	Palm Canyon, Riverside
7	Palm City, San Diego
15	Palm Desert, Riverside
15	Palm Springs, Riverside
15	Palm Wash, Imperial
14	Palm Wells, San Bernardino
14	Palmdale AP, Los Angeles
4	Palo Alto, Santa Clara
11	Palo Cedro, Shasta
15	Palo Verde, Imperial
15	Palo Verde Valley, Riverside
12	Paloma, Calaveras
14	Palomar Mountain, San Diego
6	Palos Verdes Estates, Los Angeles
16	Panamint, Inyo
16	Panamint Range, Inyo
14	Panamint Springs, Inyo
14	Panamint Valley, Inyo
4	Panoche, San Benito
11	Paradise, Butte
4	Paraiso Springs, Monterey
8	Paramount, Los Angeles
12	Pardee Reservoir, Amador /Calaveras
15	Parker Dam, San Bernardino
4	Parkfield, Monterey
13	Parlier, Fresno
9	Pasadena, Los Angeles
11	Paskenta, Tehama
4	Paso Robles AP, San Luis Obispo
16	Patrick Creek, Del Norte
1	Patricks Point, Humboldt
12	Patterson, Stanislaus
12	Paulsell, Stanislaus
10	Pauma Valley, San Diego
16	Paxton, Plumas
1	Paynes Creek, Tehama
16	Peanut, Trinity
14	Pearblossom, Los Angeles
14	Pearland, Los Angeles
3	Pebble Beach, Monterey
10	Pedley, Riverside
7	Pendleton M.C.B., San Diego
11	Penn Valley, Nevada
2	Penngrove, Sonoma
11	Pennington, Sutter
11	Penryn, Placer
11	Pentz, Butte
1	Pepperwood, Humboldt
16	Perez, Modoc
10	Perris, Riverside
3	Pescadero, San Mateo
2	Petaluma, Sonoma
2	Petaluma River, Marin/Sonoma
12	Peters, San Joaquin
1	Petrolia, Humboldt
14	Phelan, San Bernardino
2	Phillipsville, Humboldt
2	Philo, Mendocino
15	Picacho, Imperial
15	Picacho Wash, Imperial

Zone	Location:City, County
9	Pico Rivera, Los Angeles
3	Piedmont, Alameda
13	Piedra PO, Fresno
16	Pierce, Siskiyou
2	Piercy, Mendocino
2	Pieta, Mendocino
3	Pigeon Point, San Mateo
3	Pillar Point, San Mateo
12	Pilot Hill, El Dorado
16	Pilot Peak, Mariposa/Tuolumne
11	Pilot Peak, Nevada
16	Pilot Peak, Plumas
13	Pine Canyon, Fresno
4	Pine Canyon, Monterey
4	Pine Canyon, San Luis Obispo
5	Pine Canyon, Santa Barbara
16	Pine Flat, Tulare
12	Pine Grove, Amador
4	Pine Mountain, San Luis Obispo
16	Pine Mountain, Ventura
16	Pine Ridge, Fresno
14	Pine Valley, San Diego
16	Pinecrest, Tuolumne
13	Pinedale, Fresno
16	Pinehurst, Fresno
15	Pinkham Wash, Riverside
14	Pinnacles NM, San Bernardino
3	Pinole, Contra Costa
14	Pinon Hills, San Bernardino
14	Pinto Mountains, Riverside
15	Pinto Wash, Imperial
14	Pinto Wash, Riverside
16	Pioneer, Amador
14	Pioneer Point, San Bernardino
14	Pioneertown, San Bernardino
14	Pipes Wash, San Bernardino
9	Piru, Ventura
5	Pismo Beach, San Luis Obispo
16	Pit River (North Fork), Modoc
16	Pit River (South Fork), Modoc
16	Pit River (town), Lassen
12	Pittsburg, Contra Costa
16	Pittville, Shasta
14	Piute Valley, San Bernardino
14	Piute Wash, San Bernardino
13	Pixley, Tulare
8	Placentia, Orange
11/16	Placer County
12	Placerville, El Dorado
12	Plainsburg, Merced
13	Plainview, Tulare
12	Planada, Merced
1	Plantation, Sonoma
16	Plasse, Amador
15	Plaster City, Imperial
11	Platina, Shasta
16	Pleasant Grove, Inyo
11	Pleasant Hill, Sutter
12	Pleasant Hill, Contra Costa
12	Pleasanton, Alameda
16	Plumas, Lassen
16	Plumas County
12	Plymouth, Amador
1	Point Arena, Mendocino
5	Point Arguello, Santa Barbara
3	Point Bonita, Marin
5	Point Buchon, San Luis Obispo
6	Point Conception, Santa Barbara
1	Point Delgada, Humboldt
6	Point Dume, Los Angeles
6	Point Fermin, Los Angeles
7	Point La Jolla, San Diego
3	Point Lobos, Monterey
7	Point Loma, San Diego
6	Point Mugu, Ventura
6	Point Mugu Naval Missile Center, Ventura
5	Point Piedras Blanca, San Luis Obispo
12	Point Pleasant, Sacramento
3	Point Reyes, Marin
3	Point Reyes Station, Marin
1	Point Saint George, Del Norte
5	Point Sal, Santa Barbara
3	Point Sur, Monterey
16	Pollock Pines, El Dorado
9	Pomona, Los Angeles
13	Pond, Kern
16	Pondosa, Siskiyou
2	Pope Valley, Napa
13	Poplar, Tulare
14	Porcupine Wash, Riverside
12	Port Chicago, Contra Costa
6	Port Hueneme, Ventura
13	Porterville, Tulare
16	Portola, Plumas
3	Portola Valley, San Mateo
13	Posey, Tulare
3	Posts, Monterey
14	Potrero, San Diego
2	Potter Valley, Mendocino
10	Poway Valley, San Diego
4	Powell Canyon, Monterey
4	Pozo, San Luis Obispo
10	Prado Flood Control Basin, Riverside/San Bernardino
3	Prather, Fresno
3	Presidio of San Francisco, San Francisco
16	Preston Peak, Siskiyou
4	Priest Valley, Monterey
11	Princeton, Colusa
11	Proberta, Tehama
11	Project City, Shasta
14	Providence Mountains, San Bernardino
3	Prunedale, Monterey
16	Pulga, Butte
16	Purdy, Sierra
5	Purisma Hills, Santa Barbara
12	Putah South Canal, Solano
16	Pyramid Lake, Los Angeles

Q

10	Quail Valley, Riverside
14	Quartz Hill, Los Angeles
15	Quartz Peak, Imperial
16	Quatal Canyon, Ventura
13	Quedow Mountain, Tulare
16	Quincy, Plumas

R

11	Racherby, Yuba
13	Rag Gulch, Kern
12	Rail Road Flat, Calaveras
10	Railroad Canyon Reservoir, Riverside
10	Rainbow, San Diego
13	Raisin City, Fresno
16	Raker & Thomas Reservoir, Modoc
10	Ramona, San Diego
1	Ranch, Mendocino
14	Ranchita, San Diego
12	Rancho Cordova, Sacramento
10	Rancho Cucamonga, San Bernardino
15	Rancho Mirage, Riverside
6	Rancho Palos Verdes, Los Angeles
7	Rancho Santa Fe, San Diego
8	Rancho Santa Margarita, Orange
14	Randsburg, Kern
16	Ravendale, Lassen
13	Raymond, Madera
11	Red Bank, Tehama
11	Red Bluff, Tehama
16	Red Mountain, Del Norte
14	Red Mountain, San Bernardino
13	Red Top, Madera
16	Red Wall Canyon, Inyo
1	Redcrest, Humboldt
11	Redding, Shasta
10	Redlands, San Bernardino
14	Redman, Los Angeles
6	Redondo Beach, Los Angeles
2	Redway, Humboldt
3	Redwood City, San Mateo
4	Redwood Estates, Santa Clara
2	Redwood Valley, Mendocino
13	Reedley, Fresno
4	Reliz Canyon, Monterey
16	Renegade Canyon, Inyo
1	Requa, Del Norte
12	Rescue, El Dorado
9	Reseda, Los Angeles
2	Reynolds, Mendocino
14	Rhodes Wash, Inyo
10	Rialto, San Bernardino
15	Rice, San Bernardino
15	Rice Valley, Riverside
11	Richardson Springs, Butte
11	Richfield, Tehama
13	Richgrove, Tulare
3	Richmond, Contra Costa
11	Richvale, Butte
2	Ridge, Mendocino

Zone	Location:City, County
14	Ridgecrest, Kern
14	Riggs Wash, San Bernardino
1	Rio Dell, Humboldt
12	Rio Linda, Sacramento
2	Rio Nido, Sonoma
11	Rio Oso, Sutter
12	Rio Vista, Solano
15	Ripley, Riverside
12	Ripon, San Joaquin
13	Ripperdan, Madera
12	River Pines, Amador
16	River Springs Lakes, Mono
12	Riverbank, Stanislaus
12	Riverbank Army Depot, Stanislaus
13	Riverdale, Fresno
10	Riverside, Riverside
10/14/15/16	Riverside County
16	Roaring River, Fresno
11	Robbins, Sutter
12	Robla, Sacramento
11	Rocklin, Placer
1	Rockport, Mendocino
12	Rockville, Solano
3	Rodeo, Contra Costa
14	Rogers Lake, Kern
2	Rohnert Park, Sonoma
1	Rohnerville, Humboldt
13	Rolinda, Fresno
6	Rolling Hills, Los Angeles
6	Rolling Hills Estates, Los Angeles
10	Romoland, Riverside
14	Rosamond, Kern
14	Rosamond Lake, Kern/Los Angeles
9	Rosemead, Los Angeles
11	Roseville, Placer
11	Rosewood, Tehama
2	Ross, Marin
8	Rossmoor, Orange
11	Rough and Ready, Nevada
16	Round Mountain, Shasta
16	Rovana, Inyo
9	Rowland Heights, Los Angeles
16	Rubicon River, El Dorado/Placer
10	Rubidoux, Riverside
12	Rumsey, Yolo
16	Running Springs, San Bernardino
16	Russian Peak, Siskiyou
16	Ruth, Trinity
2	Rutherford, Napa
14	Ryan, Inyo
12	Ryde, Sacramento

S

Zone	Location:City, County
12	Sacramento AP, Sacramento
12	Sacramento Army Depot, Sacramento
12	Sacramento County
16	Saddle Mountain, El Dorado
10	Sage, Riverside
16	Sage Hen, Lassen
16	Saint Bernard, Tehama
2	Saint Helena, Napa
13	Saint Johns River, Tulare
12	Saint Mary's College, Contra Costa
12	Salida, Stanislaus
3	Salinas, Monterey
16	Saline Valley, Inyo
16	Salmon Mountain, Humboldt/Siskiyou
16	Salmon River, Siskiyou
16	Salmon River (East Fork), Siskiyou
16	Salmon River (North Fork), Siskiyou
16	Salmon River (South Fork), Siskiyou
16	Salt Lake, Inyo
1	Salt River, Humboldt
16	Salt Springs Reservoir, Amador/Calavaras
12	Salt Springs Valley Reservoir, Calaveras
14	Saltdale, Kern
15	Saltmarsh, San Bernardino
15	Salton City, Imperial
15	Salton Sea, Imperial/Riverside
15	Saltus, San Bernardino
16	Salyer, Trinity
1	Samoa, Humboldt
12	San Andreas, Calaveras
3	San Andreas Lake, San Mateo
2	San Anselmo, Marin
16	San Antonio Canyon, Los Angeles
4	San Antonio Mission, Monterey
12	San Antonio Reservoir, Alameda
4	San Antonio Reservoir, Monterey
4	San Antonio River, Monterey
4	San Antonio River (North Fork), Monterey
4	San Ardo, Monterey
4	San Benito County
4	San Benito, San Benito
4	San Benito Mountain, San Benito
4	San Benito River, San Benito
10	San Bernardino, San Bernardino
10/14/15/16	San Bernardino County
16	San Bernardino Mountains, San Bernardino
3	San Bruno, San Mateo
6	San Buenaventura, Ventura
3	San Carlos, San Mateo
6	San Clemente, Orange
6	San Clemente Island, Los Angeles
7	San Diego, San Diego
7	San Diego Bay, San Diego
7/10/14/15	San Diego County
7	San Diego Naval Hospital, San Diego
7	San Diego Naval Station, San Diego
9	San Dimas, Los Angeles
14	San Felipe, San Diego
4	San Felipe, Santa Clara
9	San Fernando, Los Angeles
9	San Fernando Valley, Los Angeles
3	San Francisco, San Francisco
3	San Francisco Bay, San Francisco
3	San Francisco County
9	San Gabriel, Los Angeles
16	San Gabriel Mountains, Los Angeles
16	San Gabriel River (West Fork), Los Angeles
16	San Gorgonio Mountain, San Bernardino
15	San Gorgonio Pass, Riverside
15	San Gorgonio River, Riverside
3	San Gregorio, San Mateo
10	San Jacinto, Riverside
15	San Jacinto Mountains, Riverside
10	San Jacinto River, Riverside
13	San Joaquin, Fresno
12	San Joaquin County
16	San Joaquin River (East Fork), Madera
16	San Joaquin River (Middle Fork), Madera
16	San Joaquin River (North Fork), Madera
16	San Joaquin River (South Fork), Madera
16	San Joaquin River (West Fork), Madera
4	San Jose, Santa Clara
4	San Juan Bautista, San Benito
6	San Juan Capistrano, Orange
3	San Leandro, Alameda
3	San Lorenzo, Alameda
3	San Lorenzo River, Santa Cruz
4	San Lucas, Monterey
12	San Luis Holding Reservoir, Merced
5	San Luis Obispo, San Luis Obispo
5	San Luis Obispo Bay, San Luis Obispo
4/5	San Luis Obispo County
7	San Luis Rey, San Diego
14	San Luis Rey River (West Fork), San Diego
10	San Marcos, San Diego
9	San Marino, Los Angeles
4	San Martin, Santa Clara
3	San Mateo, San Mateo
10	San Mateo Canyon, San Diego
3	San Mateo County
4	San Miguel, San Luis Obispo

Zone	Location:City, County
6	San Miguel Island, Santa Barbara
6	San Nicholas Island, Ventura
7	San Onofre, San Diego
10	San Onofre Canyon, San Diego
3	San Pablo, Contra Costa
10	San Pasqual, San Diego
6	San Pedro, Los Angeles
6	San Pedro Bay, Los Angeles
2	San Quentin, Marin
2	San Rafael, Marin
5	San Rafael Mountain, Santa Barbara
12	San Ramon, Contra Costa
5	San Simeon, San Luis Obispo
10	San Timoteo Canyon, Riverside
10	San Vicente Reservoir, San Diego
7	San Ysidro, San Diego
10	San Ysidro Mountains, San Diego
3	Sand City, Monterey
15	Sand Hills, Imperial
16	Sandberg, Los Angeles
15	Sandia, Imperial
14	Sands, San Bernardino
2	Sanel Mountain, Mendocino
13	Sanger, Fresno
2	Sanitarium Napa
8	Santa Ana, Orange
6	Santa Barbara, Santa Barbara
4/5/6	Santa Barbara County
6	Santa Barbara Island, Santa Barbara
6	Santa Catalina Island, Los Angeles
4	Santa Clara, Santa Clara
4	Santa Clara County
6/9	Santa Clara River, Ventura
4	Santa Clara Valley, Santa Clara
9	Santa Clarita, Los Angeles
3	Santa Cruz, Santa Cruz
3	Santa Cruz County
6	Santa Cruz Island, Santa Barbara
3	Santa Cruz Mountains, Santa Cruz
9	Santa Fe Springs, Los Angeles
4	Santa Margarita, San Luis Obispo
4	Santa Margarita Lake, San Luis Obispo
5	Santa Maria, Santa Barbara
5	Santa Maria River, San Luis Obispo/Santa Barbara
5	Santa Maria Valley, Santa Barbara
6	Santa Monica, Los Angeles
6	Santa Monica Bay, Los Angeles
6	Santa Monica Mountains, Los Angeles
9	Santa Paula, Ventura
12	Santa Rita Park, Merced
2	Santa Rosa, Sonoma
6	Santa Rosa Islands, Santa Barbara
15	Santa Rosa Mountains, Riverside
9	Santa Susana, Ventura
2	Santa Venetia, Marin
5	Santa Ynez, Santa Barbara
5	Santa Ynez Mountains, Santa Barbara
5	Santa Ynez River, Santa Barbara
14	Santa Ysabel, San Diego
10	Santee, San Diego
8	Santiago Reservoir, Orange
4	Saratoga, Santa Clara
16	Sardine Peak, Sierra
4	Sargent, Santa Clara
4	Sargent Canyon, Monterey
6	Saticoy, Ventura
16	Sattley, Sierra
6	Saugus, Los Angeles
3	Sausalito, Marin
16	Sawtooth Peak, Inyo
16	Sawyers Bar, Siskiyou
16	Scarface, Modoc
16	Scheelite, Inyo
2	Schellville, Sonoma
1	Scotia, Humboldt
16	Scott Bar, Siskiyou
16	Scott Bar Mountains, Siskiyou
16	Scott Mountains, Trinity
16	Scott River, Siskiyou
16	Scott River (East Fork), Siskiyou
16	Scotts, Lassen
3	Scotts Valley, Santa Cruz
16	Scottys Castle, Inyo
6	Sea Cliff, Ventura
6	Seal Beach, Orange
14	Searles, Kern
14	Searles Lake, San Bernardino
4	Seaside, Monterey
2	Sebastopol, Sonoma
15	Seeley, Imperial
16	Seiad Valley, Siskiyou
13	Selma, Fresno
15	Senator Wash, Imperial
16	Seneca, Plumas
9	Sepulveda, Los Angeles
9	Sepulveda Dam, Los Angeles
2	Sequoia, Humboldt
9	Sespe, Ventura
16	Seven Oaks, San Bernardino
14	Shadow Valley, San Bernardino
13	Shafter, Kern
4	Shandon, San Luis Obispo
12	Sharpe Army Depot, San Joaquin
11	Shasta, Shasta
11	Shasta Bally, Shasta
11/16	Shasta County
16	Shasta Lake, Shasta
16	Shasta River, Siskiyou
16	Shasta Springs, Siskiyou
16	Shasta Valley, Siskiyou
16	Shaver Lake, Fresno
4	Shedd Canyon, San Luis Obispo
14	Sheep Canyon, Inyo
16	Sheep Mountain, Siskiyou
12	Sheep Ranch, Calaveras
12	Sheldon, Sacramento
1	Shelter Cove, Humboldt
11	Sheridan, Placer
9	Sherman Oaks, Los Angeles
16	Sherman Peak, Tulare
12	Shingle Springs, El Dorado
16	Shingletown, Shasta
1	Shively, Humboldt
14	Shoshone, Inyo
14	Sidewinder Mountain, San Bernardino
16	Sierra Army Depot, Lassen
16	Sierra Buttes, Sierra
16	Sierra City, Sierra
16	Sierra County
9	Sierra Madre, Los Angeles
16	Sierra Nevada, Madera
16	Sierra Valley, Plumas/Sierra
16	Sierraville, Sierra
6	Signal Hill, Los Angeles
16	Silver City, Tulare
13	Silver Creek, Fresno
16	Silver Lake, Amador
14	Silver Lake, San Bernardino
8	Silverado, Orange
16	Silverwood Lake, San Bernardino
9	Simi Valley, Ventura
4	Simmler, Simmler
16	Siskiyou County
16	Siskiyou Mountains, Del Norte/Siskiyou
5	Sisquoc, Santa Barbara
5	Sisquoc River, Santa Barbara
11	Sites, Colusa
2	Skaggs Springs, Sonoma
16	Skedaddle Mountains, Lassen
16	Skidoo, Inyo
14	Slate Range, Inyo /San Bernardino
9	Sleepy Valley, Los Angeles
16	Sloat, Plumas
12	Sloughhouse, Sacramento
11	Smartville, Yuba
16	Smith River (Middle Fork), Del Norte
16	Smith River (North Fork), Del Norte
16	Smith River (South Fork), Del Norte
1	Smith River, Del Norte
12	Smithflat, El Dorado
14	Smoke Tree Wash, Riverside
11	Snake River, Sutter
12	Snelling, Merced
16	Snowden, Siskiyou
14	Soda Lake, San Bernardino
4	Soda Lake, San Luis Obispo

Zone	Location:City, County
14	Soda Mountains, San Bernardino
16	Soda Springs, Nevada
1	Soda Springs, Sonoma
7	Solana Beach, San Diego
3/12	Solano County
3	Soledad, Monterey
9	Solemint, Los Angeles
6	Solromar, Ventura
5	Solvang, Santa Barbara
12	Somerset, El Dorado
16	Somes Bar, Siskiyou
6	Somis, Ventura
2	Sonoma, Sonoma
2/3	Sonoma County
2	Sonoma Mountain, Sonoma
12	Sonora, Tuolumne
16	Sonora Pass, Mono/Tuolumne
3	Soquel, Santa Cruz
12	Soulsbyville, Tuolumne
16	Sourdough Spring, Inyo
12	South Dos Palos, Merced
9	South El Monte, Los Angeles
16	South Entry Yosemite, Tuolumne
1	South Fork, Humboldt
8	South Gate, Los Angeles
6	South Laguna, Orange
16	South Lake Tahoe, El Dorado
9	South Pasadena, Los Angeles
3	South San Francisco, San Mateo
12	South Turlock, Stanislaus
16	South Yolla Bolly Mountains, Tehama
9	South Whittier, Los Angeles
14	Spangler, San Bernardino
16	Spanish Mountain, Fresno
16	Spanish Spring, Inyo
3	Spence, Monterey
3	Spreckels, Monterey
16	Spring Garden, Plumas
10	Spring Valley, San Diego
13	Springville, Tulare
2	Spyrock, Mendocino
13	Squaw Valley, Fresno
16	Squaw Valley (Olympic Valley), Placer
14	Squirrel Inn, San Bernardino
16	Stacy, Lassen
16	Stampede Reservoir, Sierra
12	Standard, Tuolumne
16	Standish, Lassen
16	Stanislaus, Calaveras
12	Stanislaus County
16	Stanislaus River (Middle Fork), Tuolumne
8	Stanton, Orange
12	Stent, Tuolumne
13	Stevens, Kern
12	Stevinson, Merced
1	Stewarts Point,Sonoma
3	Stinson Beach, Marin
16	Stirling City, Butte
12	Stockton, San Joaquin
11	Stony Gorge Reservoir, Glenn
11	Stonyford, Colusa
16	Storrie, Plumas
14	Stovepipe Wells, Inyo
13	Stratford, Kings
13	Strathmore, Tulare
16	Strawberry, Tuolumne
16	Strawberry Valley, Yuba
12	Suisun Bay, Contra Costa/Solano
12	Suisun City, Solano
9	Sulphur Springs, Ventura
13	Sultana, Tulare
6	Summerland, Santa Barbara
11	Summit City, Shasta
10	Sun City, Riverside
9	Sun Valley, Los Angeles
10	Suncrest, San Diego
9	Sunland, Los Angeles
10	Sunnymead, Riverside
4	Sunnyvale, Santa Clara
4	Sunnyvale Air Force Station, Santa Clara
12	Sunol, Alameda
6	Sunset Beach, Orange
14	Superior Lake, San Bernardino
15	Superstition Mountain, Imperial
5	Surf, Santa Barbara
10	Surfside, Orange
16	Surprise Valley, Modoc
16	Susan River, Lassen
16	Susanville, Lassen
11	Sutter, Sutter
11	Sutter Buttes, Sutter
11	Sutter Bypass, Sutter
11	Sutter County
12	Sutter Creek, Amador
4	Svedal, Santa Clara
3	Swanton, Santa Cruz
10	Sweetwater Reservoir, San Diego
11	Sycamore, Colusa
9	Sylmar, Los Angeles

T

Zone	Location:City, County
13	Taft, Kern
13	Taft Heights, Kern
13	Tagus, Tulare
16	Tahoe City, Placer
16	Tahoe Pines, Placer
16	Tahoe Vista, Placer
16	Tahoma, Placer
6	Tajiguas, Santa Barbara
2	Talmage, Mendocino
11	Tambo, Yuba
2	Tassajara, Contra Costa
4	Tassajara Hot Springs, Monterey
2	Tatu, Mendocino
4	Taylor Canyon, San Luis Obispo
1	Taylor Peak, Humboldt
16	Taylorsville, Plumas
14	Teagle Wash, San Bernardino
16	Teakettle Junction, Inyo
14	Tecate, San Diego
16	Tecnor, Siskiyou
14	Tecopa, Inyo
16	Tehachapi, Kern
16	Tehachapi Mountains, Kern
16	Tehachapi Pass, Kern
11	Tehama, Tehama
11/16	Tehama County
16	Tejon Pass, Los Angeles
16	Telescope Peak, Inyo
10	Temecula, Riverside
10	Temescal Wash, Riverside
9	Temple City, Los Angeles
4	Templeton, San Luis Obispo
16	Tennant, Siskiyou
5	Tepusquet Canyon, Santa Barbara
5	Tequspuet Peak, Santa Barbara
12	Terminous, San Joaquin
13	Terminus Dam, Tulare
16	Termo, Lassen
13	Terra Bella, Tulare
15	Thermal, Riverside
11	Thermalito, Butte
11	Thermalito Afterbay, Butte
11	Thermalito Forebay, Butte
16	Thomas A. Edison Lake, Fresno
16	Thomas Mountain, Riverside
4	Thompson Canyon, Monterey
12	Thornton, San Joaquin
9	Thousand Oaks, Ventura
15	Thousand Palms, Riverside
14	Three Points, Los Angeles
13	Three Rivers, Tulare
13	Three Rocks, Fresno
3	Tiburon, Marin
11	Tiger Creek PH, Butte
14	Tiefort Mountains, San Bernardino
14	Tierra del Sol, San Diego
7	Tijuana River, San Diego
16	Tinemaha Reservoir, Inyo
16	Tioga Pass, Mono/Tuolumne
16	Tionesta, Modoc
13	Tipton, Tulare
16	Titus Canyon, Inyo
16	Tobias Peak, Tulare
13	Tollhouse, Fresno
3	Tomales, Marin
3	Tomales Bay, Marin
16	Toms Place, Mono
6	Topanga, Los Angeles
6	Topanga Beach, Los Angeles
6	Topanga Canyon, Los Angeles
16	Topaz, Mono
16	Topaz Lake, Mono
6	Torrance, Los Angeles
8	Trabuco Canyon, Orange
12	Tracy Carbona, San Joaquin
13	Tranquillity, Fresno
13	Traver, Tulare
12	Travis A. F.B., Solano

Zone	Location:City, County
3	Treasure Island Naval Station, San Francisco
12	Tremont, Solano
4	Tres Pinos, San Benito
13	Trigo, Madera
16	Trimmer, Fresno
1	Trinidad, Humboldt
1	Trinidad Head, Humboldt
16	Trinity Alps, Trinity
16	Trinity Center, Trinity
2/11/16	Trinity County
16	Trinity Dam, Trinity
16	Trinity Mountains, Shasta/Trinity
16	Trinity River (East Fork), Trinity
14	Trona, San Bernardino
11	Trowbridge, Sutter
16	Troy, Placer
16	Truckee, Nevada
16	Truckee River, Nevada
4	Tucker Canyon, San Luis Obispo
11	Tudor, Sutter
16	Tujunga, Los Angeles
13	Tulare, Tulare
13/16	Tulare County
13	Tulare Lake Bed, Kings
12	Tule Canal, Yolo
16	Tule Lake Sump, Siskiyou
16	Tule Mountain, Lassen
13	Tule River, Kings
15	Tule Wash, Imperial
16	Tulelake, Siskiyou
12	Tuolumne, Tuolumne
12/16	Tuolumne County
16	Tuolumne Meadows, Tuolumne
16	Tuolumne River (North Fork), Tuolumne
16	Tuolumne River (South Fork), Tuolumne
13	Tupman, Kern
13	Turk, Fresno
12	Turlock, Stanislaus
12	Turlock Lake, Stanislaus
12	Turner, San Joaquin
11	Turntable Creek, Shasta
14	Turtle Mountains, San Bernardino
8	Tustin, Orange
12	Tuttle, Merced
12	Tuttletown, Tuolumne
16	Twain, Plumas
12	Twain Harte, Tuolumne
14	Twentynine Palms, San Bernardino
16	Twin Bridges, El Dorado
12	Twin Cities, Sacramento
16	Twin Lakes, Mono
3	Twin Lakes, Santa Cruz
5	Twitchell Reservoir, San Luis Obispo/Santa Barbara
2	Two Rock, Sonoma

U

Zone	Location:City, County
9	UCLA, Los Angeles
2	Ukiah, Mendocino
3	Union City, Alameda
16	Union Valley Reservoir, El Dorado
8	U.S.M.C. Air Station El Toro /Santa Ana Orange
7	U.S.M.C. Recruit Depot, San Diego, San Diego
15	U.S.N. Air Field, El Centro, Imperial
3	U.S.N. Air Station, Alameda, Alameda
7	U.S.N. Air Station, Imperial Beach, San Diego
13	U.S.N. Air Station, Lemoore, Kings
8	U.S.N. Air Station, Los Alamitos, Orange
7	U.S.N. Air Station, North Island, San Diego
12	U.S.N. Communication Station, Stockton, San Joaquin
3	U.S.N. Facility, Point Sur, Monterey
3	U.S.N. Facility, San Bruno, San Mateo
6	U.S.N. Facility, San Clement Is. Los Angeles
6	U.S.N. Facility, San Nicolas Is. Ventura
4	U.S.N. Facility, Sunnyvale, Santa Clara
3	U.S.N. Facility, Vallejo, Solano
7	U.S.N. Reservation, Point Loma, San Diego
6	U.S.N. Shipyard, Long Beach, Los Angeles
3	U.S.N. Supply Center, Oakland, Alameda
12	U.S.N. Weapons Station, Concord, Contra Costa
6	U.S.N. Weapons Station, Seal Beach, Orange
6	U.S.N. Construction Battalion, Port Hueneme, Ventura
7	U.S. Navy Training Center, San Diego
15	Unnamed Wash, Imperial
10	Upland, San Bernardino
2	Upper Lake, Lake
16	Upper Lake, Modoc
3	Upper San Leandro Reservoir, Alameda
13	Usona, Mariposa

V

Zone	Location:City, County
12	Vacaville, Solano
16	Vade, El Dorado
9	Val Verde Park, Los Angeles
9	Valencia, Los Angeles
9	Valinda, Los Angeles
10	Valle Vista, Riverside
12	Vallecito, Calaveras
3	Vallejo, Solano
10	Valley Center, San Diego
2	Valley Ford, Sonoma
12	Valley Home, Stanislaus
12	Valley Springs, Calaveras
14	Valley Wells, Inyo
14	Valyermo, Los Angeles
9	Van Nuys, Los Angeles
5	Vandenberg Air Force Base, Santa Barbara
5	Vandenburg Village, Santa Barbara
6	Venice, Los Angeles
4	Ventupopa, Santa Barbara
6	Ventura, Ventura
6/9/16	Ventura County
9	Verdugo Mountains
16	Vermilion Valley Dam, Fresno
12	Vernalis, San Joaquin
8	Vernon, Los Angeles
11	Verona, Sutter
9	View Park, Los Angeles
12	Victor, San Joaquin
14	Victorville, San Bernardino
15	Vidal, San Bernardino
15	Vidal Junction, San Bernardino
15	Vidal Valley, San Bernardino
15	Vidal Wash, San Bernardino
16	Viewland, Lassen
8	Villa Park, Orange
11	Vina, Tehama
15	Vinagre Wash, Imperial
14	Vincent, Los Angeles
3	Vine Hill, Contra Costa
4	Vineyard Canyon, Monterey
16	Vinton, Plumas
16	Viola, Shasta
13	Visalia, Tulare
7	Vista, San Diego
12	Volcano, Amador
16	Volcanoville, El Dorado
12	Volta, Merced
12	Vorden, Sacramento

W

Zone	Location:City, County
1	Waddington, Humbodt
16	Walker Pass, Kern
12	Wallace, Calaveras
9	Walnut, Los Angeles
12	Walnut Creek, Contra Costa
12	Walnut Grove, Sacramento
8	Walnut Park, Los Angeles
16	Warner Mountains, Modoc
14	Warner Springs, San Diego
12	Warnersville, Stanislaus
13	Wasco, Kern
16	Washington, Nevada

Zone	Location:City, County
12	Waterford, Stanislaus
12	Waterloo, San Joaquin
14	Watson Wash, San Bernardino
3	Watsonville, Santa Cruz
16	Waucoba Mountain, Inyo
16	Waucoba Wash, Inyo
13	Waukena, Tulare
16	Wawona, Mariposa
16	Weaverville, Trinity
16	Weed, Siskiyou
13	Weed Patch, Kern
11	Weimar, Placer
2	Weitchpec, Humboldt
16	Weldon, Kern
16	Wendel, Lassen
1	Weott, Humbodlt
6	West Carson, Los Angeles
9	West Covina, Los Angeles
9	West Hollywood, Los Angeles
15	West Mesa, Imperial
12	West Modesto, Stanislaus
12	West Point, Calaveras
9	West Puente Valley, Los Angeles
12	West Sacramento, Yolo
16	West Walker River, Mono
14	Westend, San Bernardino
13	Westhaven, Fresno
1	Westhaven, Humboldt
9	Westlake Village
12	Westley, Stanislaus
6	Westminster, Orange
15	Westmorland, Imperial
1	Westport, Mendocino
16	Westwood, Lassen
5	Whale Rock Reservoir, San Luis Obispo
11	Wheatland, Yuba
13	Wheeler Ridge, Kern
16	Wheeler Springs, Ventura
15	Whipple Mountains, San Bernardino
11	Whiskeytown, Shasta
11	Whiskeytown Lake, Shasta
16	White Horse, Modoc
16	White Mountain, Mono
9	Whittier, Los Angeles
16	Wildrose RS, Inyo
16/11	Williams, Colusa
2	Williams Peak, Mendocino
2	Willits, Mendocino
8	Willow Brook, Los Angeles
2	Willlow Creek, Humboldt
16	Willow Creek Camp, Inyo
16	Willow Ranch, Modoc
14	Willow Springs, Kern
14	Willow Wash, San Bernardino
8	Willowbrook, Los Angeles
11	Willows, Glenn
12	Wilseyville, Calaveras
14	Wilsona Gardens, Los Angeles
16	Wilsonia, Tulare
12	Wilton, Sacramento
10	Winchester, Riverside
2	Windsor, Sonoma
14	Wingate Wash, Inyo
14	Winston Wash, San Bernardino
15	Winterhaven, Imperial
12	Winters, Yolo
12	Winton, Merced
16	Wishin, Madera
16	Wishin Reservoir, Fresno
15	Wister, Imperial
16	Wofford Heights, Kern
2	Woodacre, Marin
12	Woodbridge, San Joaquin
10	Woodcrest, Riverside
16	Woodfords, Alpine
13	Woodlake, Tulare
12	Woodland, Yolo
9	Woodland Hills, Los Angeles
16	Woodleaf, Yuba
2	Woodman, Mendocino
3	Woodside, San Mateo
13	Woodville, Tulare
13	Woody, Kern
16	Wrightwood, San Bernardino
4	Wunpost, Monterey
11	Wyandotte, Butte
14	Wynola, San Diego
16	Wyntoon, Siskiyou

Y

Zone	Location:City, County
14	Yermo, San Bernardino
13	Yettem, Tulare
12	Yolo, Yolo
12	Yolo Bypass, Solano/Yolo
12	Yolo County
8	Yorba Linda, Orange
2	Yorkville, Mendocino
16	Yosemite Valley, Mariposa
16	Yosemite Village, Mariposa
2	Yountville, Napa
16	Yreka, Siskiyou
11	Yuba City, Sutter
11/16	Yuba County
10	Yucaipa, San Bernardino
16	Yucca Mountain, Tulare
14	Yucca Valley, San Bernardino
15	Yuha Desert, Imperial

Z

Zone	Location:City, County
12	Zamora, Yolo
2	Zenia, Trinity
6	Zuma Canyon, Los Angeles

Appendix E
List of Publications

This appendix is reserved for the inclusion of the Commission's latest list of publications for compliance reference.

Appendix F
List of Approved Computer Programs

This appendix is reserved for the inclusion of the Commission's latest list of Approved Computer Programs or Alternative Calculation Methods (ACMs) which can be used for compliance with the energy efficiency standards.

Appendix G Glossary and Explanation of Key Terms

G.0 SUMMARY

This appendix lists and explains key terms used in the *Energy Efficiency Standards* (standards or EES) for low-rise residential buildings. Part G.1 introduces the structure of the appendix. Part G.2 is a list of all terms defined in the appendix. Part G.3 defines and explains all of the terms listed in Part G.2. Finally, Part G.4 reprints all of the tables used throughout the appendix for easy reference.

G.1 INTRODUCTION

The standards use a variety of terms relating to building attributes, features and devices; building energy conservation; energy efficiency and the calculations required for submittal to the local enforcement agency. The purpose of this chapter is to define and explain relevant terms in the context of the standards for low-rise residential buildings. This *Glossary and Explanation of Key Terms* provides specific information as to how each term is applied to compliance with any of the compliance paths: prescriptive packages or computer performance. Clarifications and definitions unique to particular compliance paths are contained in Chapters 3 and 4.

For certain topics, the text provides a cross reference to other parts of the manual, as well as to other Energy Commission publications and notices. Any direct quote from another source "is indicated with quotation marks like this." The name of the source may be listed in brackets at the end of the quote like this [*EES*, Section 101]

AER refers to the *Appliance Efficiency Regulations*, September 1992.

CHAPTER OVERVIEW

Part	Topic	Page
G.0	**Summary**	**G-1**
G.1	**Introduction**	**G-1**
G.2	**List of Terms**	**G-2**
G.3	**Definitions and Explanations of Key Terms**	**G-4**
G.4	**Reprinted Glossary Tables**	**G-59**

Applicable sections of the California Code of Regulations, Title 24, Part 6, Sections 100 through 118 and 150 through 152.

EES refers to the *Energy Efficiency Standards,* 1998 edition, unless otherwise noted.

UBC refers to the State adopted *International Conference of Building Officials Uniform Building Code,* 1994 edition or the year indicated.

G.2 LIST OF TERMS

ACCA
Accessible
Addition
AFUE (Annual Fuel Utilization Efficiency)
Air Conditioner
Air Porosity
Air-to-Air Heat Exchanger
Alteration
Alternative Calculation Method (ACM)
Alternative Component Packages
ANSI (American National Standards Institute)
Appliance Efficiency Regulations (AER)

Approved by the Commission
Approved Calculation Method (see Alternative Calculation Method)
Areal Heat Capacity
ARI (Air-Conditioning and Refrigeration Institute)
ASHRAE (American Society of Heating, Refrigeration, and Air-conditioning Engineers)
ASHRAE Handbook of Fundamentals
ASME (American Society of Mechanical Engineers)
ASTM (American Society for Testing and Materials)
Atrium (see 101(b))
Automatic
Back
Btu/hr
Building
Building Envelope
Building Location Data
Building Types
Certifying Organization
Climate Zone
Coefficient of Performance, Cooling (COP)
Coefficient of Performance, Heating (COP)
Combined Hydronic Space/Water Heating
Commission (see Energy Commission)
Compliance Documentation
Conditioned Floor Area (CFA)
Conditioned Footprint Area
Conditioned Space
Conditioned Volume
Controlled Ventilation Crawl Space (CVC)
Converting Efficiencies
Cooling Equipment
Cooling Load
Cooling Load Temperature Difference (CLTD)
Covered Product
Crawl Space
Custom Energy Budget
Decorative Gas Appliance
Degree Day, Heating
Design Conditions
Design Heat Gain
Design Heat Loss
Directly Conditioned Space
Directory of Certified Water
Dominant Occupancy
Door
East-Facing
EER (Energy Efficiency Ratio)
Efficacy
Electric Resistance Heating
Enclosed Space
Energy Budget
Energy Commission
Energy Efficiency Standards (Standards)
Energy Factor (EF)
Energy Obtained from Depletable Sources
Energy Obtained from Nondepletable Sources
Enforcing Agency
Evaporative Cooler
Exceptional Method
Exfiltration
Exposed Thermal Mass
Exterior Door
Exterior Floor/Soffit
Exterior Partition
Exterior Roof/Ceiling
Exterior Wall
Exterior Wall Area
Fenestration Area (Glazing Area)
Fenestration Product
Fireplace
Floor Area
Footprint Area
Fossil Fuels
Framed Partition or Assembly
Framing Effects
Front
Gas Heating System
Gas Log
General Lighting
Geothermal Heat Pump
Glazing
Governmental Agency
Gross Exterior Roof Area
Gross Exterior Wall Area
Ground Floor Area
Ground Source Heat Pump
Habitable Story
Heat Capacity (HC)
Heat Pump
Heating Equipment
Heating, Ventilating and Air Conditioning (HVAC)
HI (Hydronic Institute)
High-Rise Residential
Hotel/Motel
HSPF (Heating Seasonal Performance Factor)
HVAC
Hydronic Space Heating
Indirectly Conditioned Space
Infiltration
Infiltration Controls
Insulation
Insulation R-value
Interior Partition
Left
Lighting

Low-Rise Residential
Lumens/Watt
Luminaire
Manufactured Device
Mechanical Cooling
Mechanical Heating
Mixed Occupancy
Multi-Family
NFRC (National Fenestration Rating Council)
North-Facing
Operable Shading Device
Outside Air
Proposed Design
Radiant Barriers
Raised Floor
Readily Accessible
Rear
Recovered Energy
Recovery Efficiency
Relative Solar Heat Gain
Repair
Right
Roof
R-Value (Thermal Resistance)
SEER (Seasonal Energy Efficiency Ratio)
Service Water Heating
Shading
Shading Coefficient (SC)
Side Fins
Single Family Attached
Single Family Building
Skylight
Slab-on-Grade
SMACNA (Sheet Metal and Air-conditioining Contractors National Association)
Solar Heat Gain Coefficient (SHGC)
Source Energy
South-Facing
Spa
Space Conditioning System
Stairs
Standard Design
Standards
Standby Loss
Subordinate Occupancy
System
Task Lighting
Thermal Mass
Title 24
UBC (Uniform Building Code)
UL (Underwriters Laboratory)
UMC (Uniform Mechanical Code)
Unconditioned Space
Unit Interior Mass Capacity (UIMC)
U-Value
Vapor Barrier
Ventilation Air
Weatherstripping
Weighted Averaging
West-Facing
Window Area
Wood Heater
Zonal Control
Zone, Space Conditioning

G.3 DEFINITIONS AND EXPLANATIONS OF KEY TERMS

ACCA

Air-Conditioning Contractors of America.

Accessible

“[H]aving access thereto, but which first may require removal or opening of access panels, doors, or similar obstructions.” [*EES*, Section 101] (see also *Readily Accessible).*

Additions

An addition is an an extension or increase in the conditioned floor area and volume of a building. This includes converting an existing unconditioned space to a conditioned space, such as remodeling a basement, garage or attic. The standards require energy compliance analysis and documentation for all additions that increase the conditioned space and volume of the building. Chapter 7 includes detailed discussion of energy compliance for additions. See also *Alteration, Building Type, Conditioned Space and Conditioned Floor Area.*

AFUE (Annual Fuel Utilization Efficiency)

The AFUE or Annual Fuel Utilization Efficiency of a space heater is the "measure of the percentage of heat from the combustion of gas or oil which is transferred to the space being heated during a year, as determined using the applicable test method in the Appliance Efficiency Regulations or 112." [*EES*, Section 101]

AFUE is similar to the thermal efficiency in that it does not include energy consumption from standby wattage and fans.

The *Appliance Efficiency Regulations* require that AFUE of all new central furnaces manufactured on or after January 1, 1992 be at least 78 percent for equipment with output capacity less than 225,000 Btu/hr. Central furnaces with outputs greater than or equal to 225,000 Btu/hr are rated according to their Steady State (or Thermal) Efficiency. Other space heating equipment manufactured on or after January 1, 1994 has the following AFUE requirements:

Appliance	*Capacity*	*AFUE*
Furnace		78%
Gas Steam Boilers	Up to 300,000 Btuh	75%
Other Boilers	Up to 300,000 Btuh	80%

Gas space heaters manufactured on or after January 1, 1990 shall be certified to have AFUE values greater than or equal to those listed in Table G-1 below:

Table G-1 - Non-Ducted, Non-Central Gas-Fired Heating Equipment

Gas Fired Wall Furnaces, Floor Furnaces and Room Heaters			*AFUE*
Wall	fan type	up to 42,000 Btu/hour	73%
		over 42,000 Btu/hour	74%
	gravity type	up to 10,000 Btu/hour	59%
		over 10,000 Btu/hour up to 12,000 Btu/hour	60%
		over 12,000 Btu/hour up to 15,000 Btu/hour	61%
		over 15,000 Btu/hour up to 19,000 Btu/hour	62%
		over 19,000 Btu/hour up to 27,000 Btu/hour	63%
		over 27,000 Btu/hour up to 46,000 Btu/hour	64%
		over 46,000 Btu/hour	65%
Floor		up to 37,000 Btu/hour	56%
		over 37,000 Btu/hour	57%
Room		up to 18,000 Btu/hour	57%
		over 18,000 Btu/hour up to 20,000 Btu/hour	58%
		over 20,000 Btu/hour up to 27,000 Btu/hour	63%
		over 27,000 Btu/hour up to 46,000 Btu/hour	64%
		over 46,000 Btu/hour	65%

The AFUE of mobile home furnaces manufactured on or after September 1, 1990 shall be certified not to be less than 75 percent.

See *Heating, Ventilating and Air Conditioning.*

Air Conditioner

Central air conditioners with output less than 65,000 Btuh are rated according to their Seasonal Energy Efficiency Ratio (SEER), the total cooling output of a central air conditioner in Btu during its normal usage period for cooling divided by the total electric energy input in watt-hours during the same period.

The SEER takes into account losses such as electricity for fan power and cycling on and off. The SEER is generally higher than the EER, since it takes into account seasonal performance over a 12 month period.

The SEER is a function of both the condensing unit (compressor) and the type of coil selected to be used with it. Equipment manufacturers typically list efficiencies only of certain

compressor-coil combinations. Only the SEER rating determined from the compressor in combination with the largest selling national coil may be used for compliance with the building energy efficiency standards.

Central air conditioners with outputs of 65,000 Btuh or more are rated using an EER. See above *efficiency conversions* for equipment not tested for an SEER.

See *SEER* and *EER* for the required efficiency levels for various types of air conditioners and heat pumps.

Air Porosity

Air porosity is a measure of the air-tightness of infiltration barriers in units of cubic feet per hour per square foot per inch of mercury pressure difference.

Air-to-Air Heat Exchanger

An air-to-air heat exchanger is a device that reduces heat loss or gain that occurs when a building is mechanically vented. It accomplishes this by transferring heat between the conditioned air being exhausted and the unconditioned air being supplied.

Alteration

An alteration is “any change to a building's water heating system, space conditioning system lighting system, or envelope that is not an addition.” [*EES*, Section 101]

Alternative Calculation Method (ACM)

An alternative calculation method is one of “the Commission's Public Domain Computer Programs, one of the Commission's Simplified Calculation Methods, or any other calculation method approved by the Commission."[*EES*, Section 101]

Alternative Component Packages

An alternative component package is one of the sets of prescriptive requirements contained in Section 151(f) and Tables 1-Z1 through 1-Z16 of the standards (Chapter 3) which a building may meet to achieve compliance with the standards. These are often referred to as the prescriptive packages or packages.

"Buildings that comply with the prescriptive standards shall be designed, constructed and equipped to meet all of the requirements of one of the alternative packages of components shown in Tables 1-Z1 through 1-Z16 for the appropriate climate zone..." [*EES*, Section 101]

See also Chapter 3, Figures 3-1 through 3-5.

ANSI

American National Standards Institute.

Appliance Efficiency Regulations

"Appliance efficiency regulations are the regulations [standards] in Title 20, sections 1601 et. seq. of the California Code of regulations Title 24 California Code of Regulations." [*EES*, Section 101]

The *Appliance Efficiency Regulations* regulate the minimum efficiency of certain appliances, such as heating and cooling equipment, sold in California.

Approved by the Commission

"Approved by the Commission means approval under 25402.1 of the Public Resources Code." [*EES*, Section 101].

Approved Calculation Method

See *Alternative Calculation Method*.

Areal Heat Capacity

Areal heat capacity is the amount of heat, in Btu, that can be stored per square foot of wall assembly by raising the average temperature of the wall assembly one degree Fahrenheit.

See *Heat Capacity.*

ARI

Air-Conditioning and Refrigeration Institute.

ASHRAE

American Society of Heating, Refrigerating and Air-Conditioning Engineers.

ASHRAE Handbook of Fundamentals

A reference book published by the American Society of Heating, Refrigerating and Air-Conditioning Engineers which includes industry accepted standard information on thermal properties of materials and HVAC system sizing. The standards reference the 1993 edition.

ASME

American Society of Mechanical Engineers.

ASTM

American Society for Testing and Materials.

Back

"Back" indicates the back side of the building as one faces the front facade from the outside (see *Front*). This designation is used on the Certificate of Compliance (CF-1R form) to indicate the orientation of fenestration (e.g., Back-West). See also *East-Facing, South-Facing*, etc.

Btu/hr (Btuh)

British thermal unit per hour, also abbreviated Btuh. One Btu equals the amount of heat needed to raise the temperature of one pound of water one degree Fahrenheit. Used for measuring heating and cooling equipment output.

Building Envelope

The Building Envelope is made up of the elements of a building that enclose conditioned spaces and through which thermal energy may be transferred to or from the exterior.

Building Location Data

Building location data refers to specific outdoor design conditions used in calculating heating and cooling loads. Different from the climate zone used for compliance (see *Climate Zone* below), design data includes the typically warmest and coolest outdoor temperatures that a building is likely to experience in an average year in its particular location.

Temperatures are from the ASHRAE publication, *SPCDX, Climatic Data for Region X - Arizona, California, Hawaii, Nevada,* May 1982 edition (see Appendix C). For heating, the outdoor design temperature is the Winter Median of Extremes. A higher temperature is permitted, but no lower than this value. For cooling, the outdoor design temperatures must be the 0.5 percent Summer Design Dry Bulb and the 0.5 percent Wet Bulb columns.

If a building location is not listed, the local enforcement agency may determine the location for which data is available that is closest in its design characteristics to the actual building site.

Building Types

Building type refers to the classification of residential buildings defined by the *UBC* and applicable to the requirements of the *Energy Efficiency Standards.* This manual is concerned with the energy standards that apply to all new low-rise residential buildings, which includes all single family dwellings and multi-family buildings with three or fewer habitable stories in the entire building. This manual does not consider standards applicable to multi-family buildings with four or more habitable stories in the entire building, hotels, motels and officially designated historical buildings. A multi-family building contains multiple dwelling units that share common walls (single family attached) and may also share common floors or ceilings.

All new residential buildings not in the above low-rise category are covered in the 1998 edition of Energy Commission's *Nonresidential Manual for Compliance with Energy Efficiency Standards* (see Parts 1.1 and 1.2).

A single-family building is a single dwelling unit of occupancy group R-3, as defined in the *UBC***,** which stands separate and unattached from other dwelling units but may have an attached garage.

A multi-family building is a dwelling unit of occupancy group R, as defined in the *UBC***,** that shares a common wall and/or floor/ceiling with at least one other dwelling unit. See Chapter 7, Part 7.1 for more information on

multi-family energy compliance. A single family attached building is a dwelling unit of occupancy group R that shares a common wall with another dwelling unit.

An addition is an extension of or increase in conditioned floor area and volume of a building, which can be new construction or adding space conditioning to an existing space. See Chapter 6 for more information on energy compliance of additions.

An existing building is:

> "...a building erected prior to the adoption of [the current] code, or one for which a legal building permit has been issued." [*UBC,* Part II, Section 403]

Climate Zone

The Energy Commission established 16 climate zones that represent a geographic area for which an energy budget is established. These energy budgets are the basis for the standards.

Figure G-1 is an overall map of the 16 climate zones. Appendix E contains a listing of the climate zone for most California citieis. The Energy Commission publication *California Climate Zone Descriptions* (P400-95-041, July 1995) includes the same "Master Climate Zone Location Listing" for each city and the detailed climate zone boundary descriptions.

The Energy Commission originally developed weather data for each climate zone by using unmodified (but error-screened) data for a representative city and weather year (representative months from various years). The Energy Commission analyzed weather data from weather stations selected for (1) reliability of data, (2) currency of data, (3) proximity to population centers, and (4) non-duplication of stations within a climate zone. Using this information, they created representative temperature data for each zone. The remainder of the weather data for each zone is still that of the representative city. The representative city for each climate zone (CZ) is as follows:

CZ1: Arcata	CZ9: Pasadena
CZ2: Santa Rosa	CZ10: Riverside
CZ3: Oakland	CZ11: Red Bluff
CZ4: Sunnyvale	CZ12: Sacramento
CZ5: Santa Maria	CZ13: Fresno
CZ6: Los Angeles (AP)	CZ14: China Lake
CZ7: San Diego	CZ15: El Centro
CZ8: El Toro	CZ16: Mount Shasta

Combined Hydronic Space/Water Heating

A combined hydronic space conditioning and water heating system is one in which both domestic hot water and space heating is supplied from the same water heating equipment. Combined hydronic space heating includes both radiant floor systems and convective or fan coil systems. The method for analyzing combined hydronic space and water heating systems is explained in Chapter 6, Part 6.5 and Chapter 8, Part 8.9.

Commission

California Energy Commission, also known as the State Energy Resources Conservation and Development Commission. The Energy Commission was established by the Warren-Alquist Act contained in the Public Resources Code. Its mandate, in part, is to develop and implement building energy efficiency standards as described in this manual. See also Chapter 1, Part 1.1.

Compliance Documentation

There are several forms used to demonstrate compliance with the standards that are recommended for submittal to the local enforcement agency. Table G-2 contains a list of these forms. A copy of each recommended form is contained in Appendix A of this manual. Similar forms, such as those produced by approved computer programs, are also allowed to be used for compliance submittals as long as the information is the same and the format is similar [EES, Section 10-103(a)(2)(C)]. In addition to the forms described below, additional information must accompany the compliance documentation:

Plans and Specifications

Plans and specifications showing the characteristics of each feature, material, component, and manufactured device proposed to be installed in order to have the building meet the requirements of the standards. If any characteristic

is materially changed before final construction and installation and there is any question that the building might no longer comply with the standards, the building must be brought back into compliance and amended plans, specifications, and Certificate(s) of Compliance must be submitted to the enforcement agency. [*EES*, Section 10-103(a)(2)(B)]

Heating and Cooling Load Calculations

Load calculations are performed as described in Chapter 2, Part 2.4 under Space Conditioning Equipment Sizing. They need not be submitted unless requested by the local building department.

The ***forms*** are summarized below:

Certificate of Compliance: Residential (CF-1R)

A Certificate of Compliance summarizing all conservation features and devices required for energy compliance of the residential building must be submitted, regardless of the compliance approach. This form must be signed by the designer or person responsible for construction and the building owner (see Chapter 1, Part 1.3). The CF-1R must be included "on" the building plans (*EES*, Sec 10-103(a)(2)(A)).

Mandatory Measures Checklist (MF-1R)

This checklist is used by the building plan checker and field inspector to verify compliance of the building with the prescribed list of mandatory features, equipment efficiencies and product certification requirements. The documentation author indicates compliance by initialing, checking, or marking N/A (for features not applicable) in the boxes or spaces provided for the designer.

Computer Method (C-2R)

If a computer performance method is used for compliance, a detailed input report or C-2R form is generated by the approved program summarizing the input assumptions used in the analysis of the building. Approved computer programs automatically generate all required forms (see Chapter 5, Part 5.5).

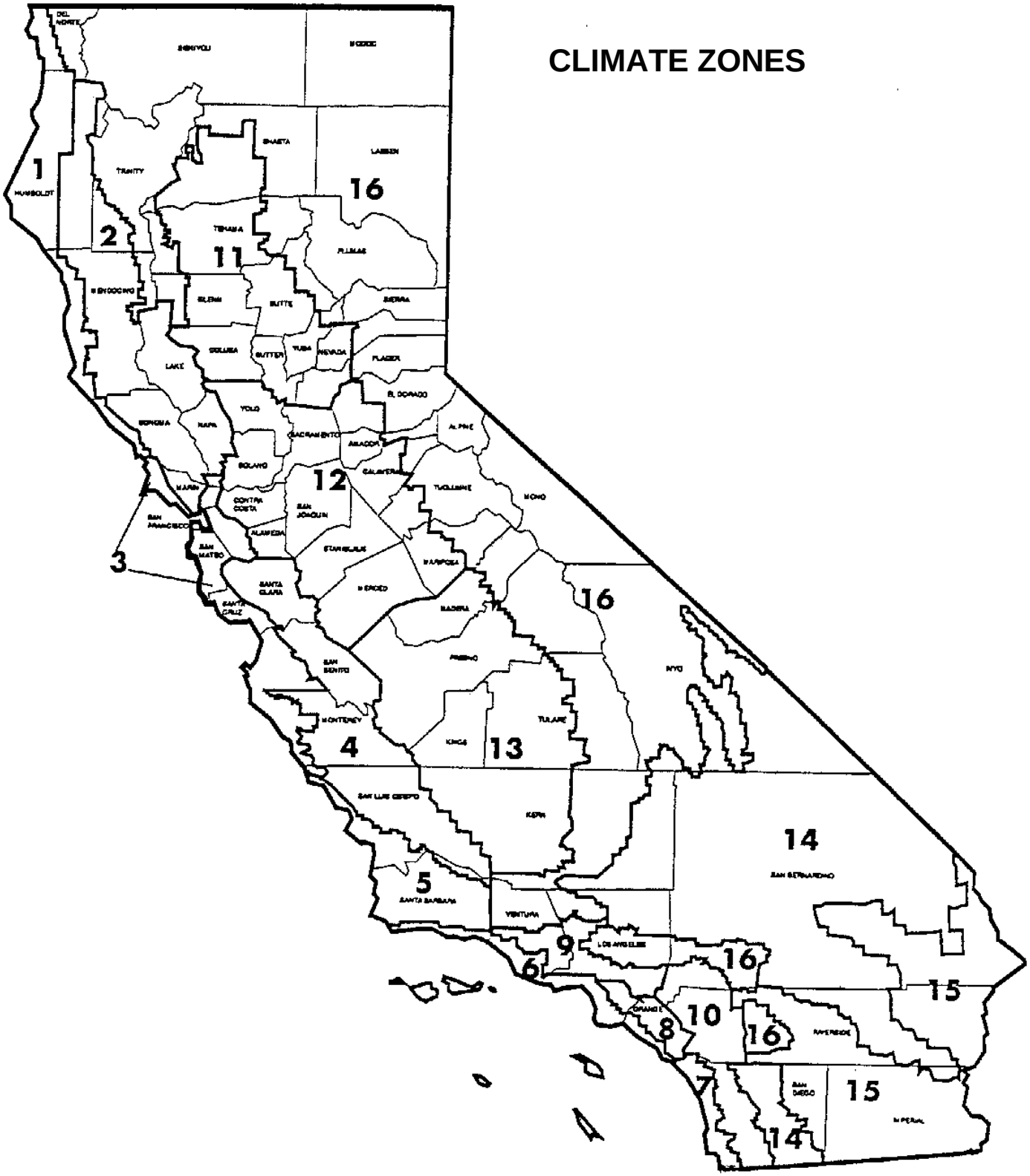

Figure G-1. California Climate Zones

No equivalent form is needed for compliance with a prescriptive package (see Chapter 3, Part 3.3).

Table G-2: Typical Compliance Forms Needed for Each Compliance Path

Form	Prescriptive Package	Computer Method
CF-1R	Req	Req
MF-1R	Req	Req
C-2R	NA	Req
WS-1R	If App.	NA
WS-2R	If App.	NA
Form 3R	If App.	If App.
Water Heating[3]	If App.	NA
Form S	If App.	If App.
Load Calc.[4]	If App.	If App.
IC-1	Req	Req
CF-4R	NA	If App.
CF-6R	Req	Req

KEY: If App. = If Applicable, Req = Required information, NA = Not Applicable

3 Required for all non-standard water heating systems as defined in Chapter 5, except for Prescriptive Package compliance analyses with water heating systems listed in Table 3-4. Calculations may be on the worksheets which accompany the water heating method (see Chapter 6, Part 6.3). Water heating calculations are automatically included in the approved computer methods so no additional water heating forms are required for those compliance paths.

4 Load calculations must be performed, but need not be submitted unless requested by the local building department.

Proposed Construction Assembly (Form 3R)

A proposed construction assembly (Form 3R) need *not* be submitted for:

- Prescriptive compliance, if the insulation R-value meets or exceeds the package requirement and the frame type is wood; or
- The computer performance method, if the standard default U-values from Table 4-1 for particular levels of insulation are assumed.

See *R-value* for instructions on completing Form 3R.

Water Heating Calculations

Water heating calculations are *not* required for the following water heating systems:

(1) Non-recirculating gas type heater with a storage tank of 50 gallons or less that meets the minimum appliance standards, and for any water heater with an energy factor of less than 0.58 includes an R-12 external insulation wrap; or

(2) Prescriptive Package compliance analyses with water heating systems listed as a "Y" in Table 3-4; or

(4) Compliance analyses with approved computer methods (these programs automatically perform all required water heating calculations internally).

See Chapter 6 for complete instructions on the water heating method.

Solar Heat Gain Coefficient Worksheet (Form S)

Documentation of solar heat gain coefficient calculations. Form S is not required to document solar heat gain coefficients taken from Tables G-6 and G-8.

Thermal Mass Worksheet (WS-1R)

A worksheet to document (1) the thermal mass goal of Alternative Component Packages A and C and (2) the building's interior thermal mass to gain compliance.

Weighted Average Worksheet (WS-2R)

A worksheet documenting how weighted average values are calculated in the following instances:

- With a package, when two or more treatments (such as different opaque wall assemblies) are averaged to meet a requirement; or

- With a computer performance method, when several values are averaged together to input into a program (such as multiple HVAC efficiencies in a multi-family building). Typically, however, each feature would be input into the computer program separately, and the program would perform all area-weighted averaging internally, with no additional form required.

Insulation Certificate (IC-1)

This form must be completed by the insulation installer or general contractor.

Certificate of Field Verification and Diagnostic Testing (CF-4R)

This certificate is completed by a HERS rater for each home that uses performance (computer) compliance credits that require diagnostic testing and field verification by a HERS rater such as improved duct efficiency or reduced envelope leakage.

The requirements for this certificate and the information on this form are spelled out in detail in Chapter 4.

Installation Certificate (CF-6R)

An installation certificate must be completed by the installer of each manufactured device (i.e., appliances and fenestration products) or by the general contractor for all devices regulated by the *Appliance Efficiency Regulations*, or the standards.

This form must either be posted at the job site or made available to the inspector. When completed, a copy of this form must also be provided to the first occupant of the building. See Chapter 1 for additional information about this form.

This manual includes the recommended version of the Installation Certificate for residential buildings. This particular form is not required, but the information it includes must be on any alternate version.

Conditioned Floor Area (CFA)

Conditioned floor area (CFA) is the [total] floor area (in square feet) of enclosed conditioned space on all floors of a building, as measured at the floor level of the exterior surfaces of exterior walls enclosing the conditioned space. [*EES*, Section 101]

This term is also referred to in the standards simply as the floor area.

This is an important value for the purpose of compliance since annual energy use is divided by this value to obtain the energy budget. In the prescriptive packages, fenestration area is expressed as a percentage of this value.

CFA is calculated from the plan dimensions of the building including the floor area of all conditioned and indirectly conditioned space on all floors (see definition of *Indirectly Conditioned Space*). It includes lofts and mezzanines but does not include covered walkways, open roofed-over areas, porches, pipe trenches, exterior terraces or steps, chimneys, roof overhangs or parking garages. Unheated basements or closets for central gas forced air furnaces are also not included unless shown to be indirectly conditioned.

Stairs

The floor area of an interior stairway is determined as the CFA beneath the stairs and the tread area of the stairs themselves.

See Figure G-2 for an example of total CFA.

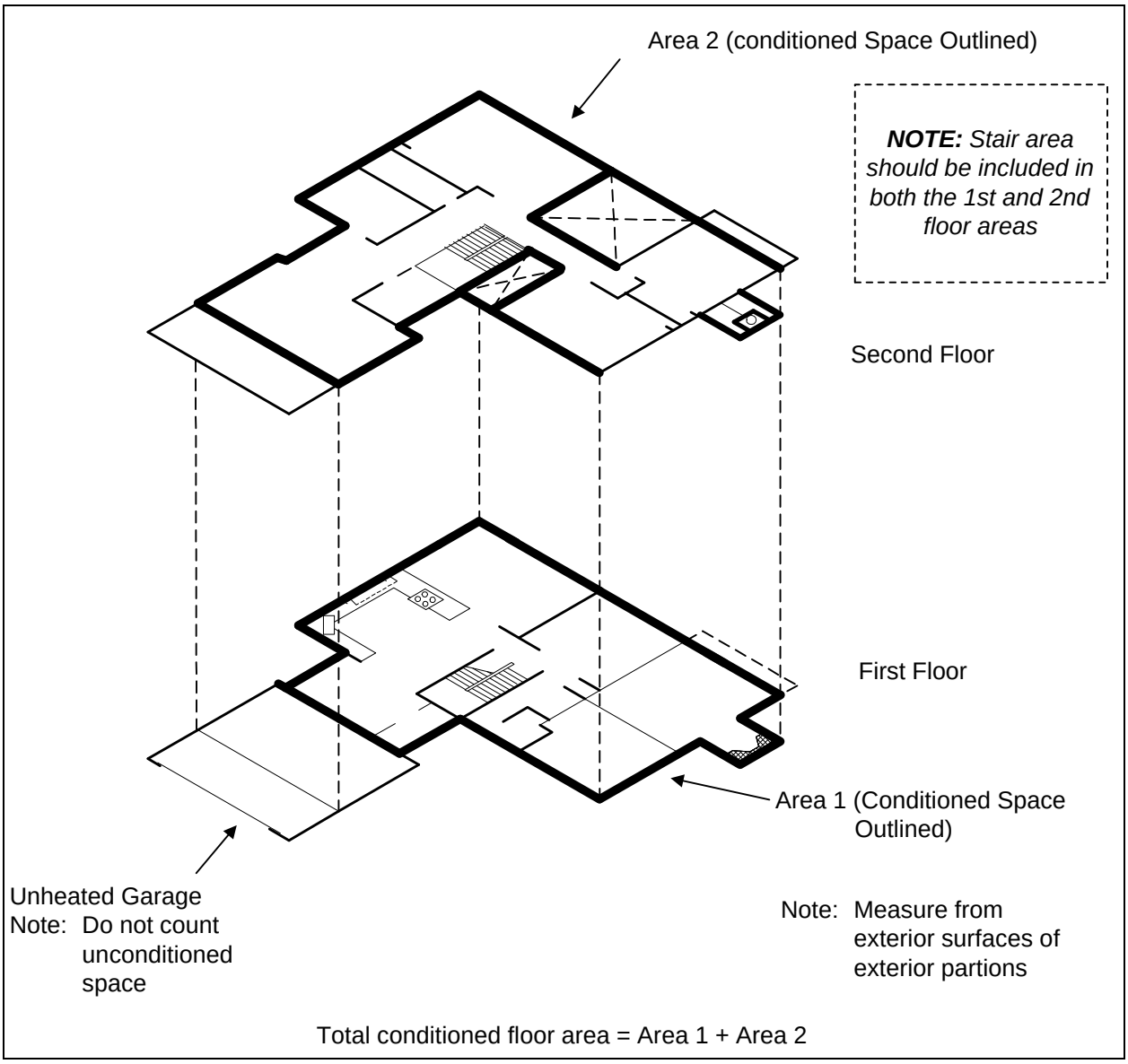

Figure G-2: Total Conditioned Floor Area

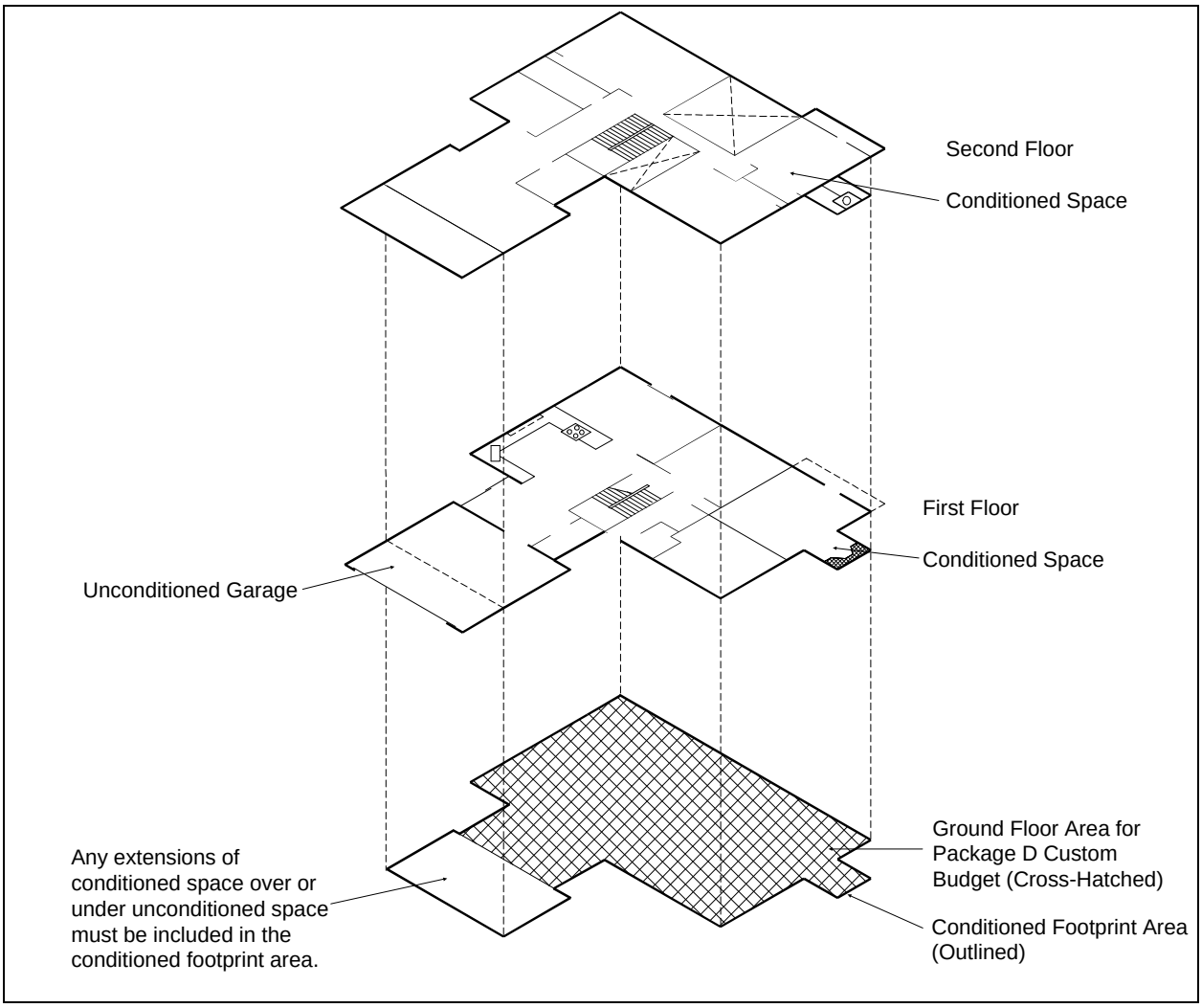

Figure G-3: Conditioned Footprint Area

Conditioned Footprint Area

The conditioned footprint is the total area of the building footprint, in square feet, not including unconditioned space.

The conditioned footprint area may be equal to the first floor area, or it may be greater. The footprint area is the total area of floor over unconditioned space (not over conditioned space), ambient air and slab-on-grade.

One way to think of the conditioned footprint area is as the area of the largest conditioned floor in the building plus the conditioned floor area of any projections from other stories that extend beyond the outline of that largest floor.

See Figure G-3 for an example of conditioned footprint area.

See also *Ground Floor Area, Raised Floor* and *Slab-on-Grade*.

Conditioned Space

In residential compliance, conditioned space is space in a building that is either directly conditioned or indirectly conditioned. [*EES*, Section 101]

Controlled Ventilation Crawl Space (CVC)

The Energy Commission has approved an exceptional method for analyzing the energy impact of buildings with raised floors which use foundation wall insulation and have automatically controlled crawl space vents. The method is available as an option using an approved computer method with unique modeling criteria explained in Chapter 5, Part 5.4L, following installation guidelines found in Chapter 8, Part 8.7.

Converting Efficiencies

When equipment is not tested for SEER, the EER may be used as the SEER. When heat pump equipment is not tested for HSPF, the following conversions may be assumed:

- Through-the-wall heat pump = 6.6 HSPF
- Central air conditioning heat pumps that do not have an HSPF rating for heating but have a COP rating, HSPF = (3.2 x COP) - 2.4

Cooling Load

The rate at which heat must be extracted from a space to maintain a desired room condition.

Cooling Load Temperature Difference (CLTD)

An equivalent temperature difference used for calculating the instantaneous external cooling loads across a wall or roof (CLTD = External Cooling Load/(U-Value x Area)). When used for glass, the CLTD calculates only the conduction cooling load.

Coefficient of Performance, Cooling (COP)

The coefficient of performance for cooling is "...the ratio of the rate of net heat removal to the rate of total energy input, calculated under designated operating conditions and expressed in consistent units, as determined using the applicable test method in the *Appliance Efficiency Regulations* or Section 112." [*EES*, Section 101]

COP and EER values may be interchanged according to the following conversion:

3413 Btu = 1 kWh

Therefore,

COP = 0.293 x EER

EER = 3.413 x COP

When heat pump equipment is tested for COP and not HSPF, the following conversions may be assumed:

- Through-the-wall heat pump = 6.6 HSPF (no credit for duct efficiency is allowed)
- Central air conditioning heat pumps = (3.2 x COP) - 2.4 = HSPF

See *Heating, Ventilating and Air Conditioning*; *EER, HSPF* and *SEER*.

Coefficient of Performance, Heating (COP)

The coefficient of performance for heating is "...the ratio of the rate of net heat output to the rate of total energy input, calculated under designated operating conditions and expressed in consistent units, as determined using the applicable test method in the Appliance Efficiency Regulations or Section 112." [*EES,* Section 101]

Air cooled central air conditioning heat pumps manufactured on or after January 1, 1992 have the following minimum COP requirements in heating mode:

Appliance	*COP*
Central Air Cooled Air Conditioning Heat Pumps over or equal to 65,000 Btuh and less than 135,000 Btuh capacity:	
High Temp. Rating (47°F Dry Bulb/ 43°F Wet Bulb)	3.0
Low Temp. Rating (17°F DB/15°F WB)	2.0

See *Heating, Ventilating and Air Conditioning*; *EER* and *SEER*.

Crawl Space

A crawl space is “a space immediately under the first floor of a building adjacent to grade." [*EES*, Section 101]

The thermal characteristics of a crawl space (or any similar vented unheated space below a raised floor) tend to reduce heat loss and heat gain into the building compared with an open, unprotected space below the floor. Compliance credit for the crawl space is assumed to be equivalent to an additional R-6 insulation value (see *Insulation*, *R-Value,* Figures G-4 and G-8). R-6 insulation is *not*

modeled when a raised floor is over an open area or over a garage.

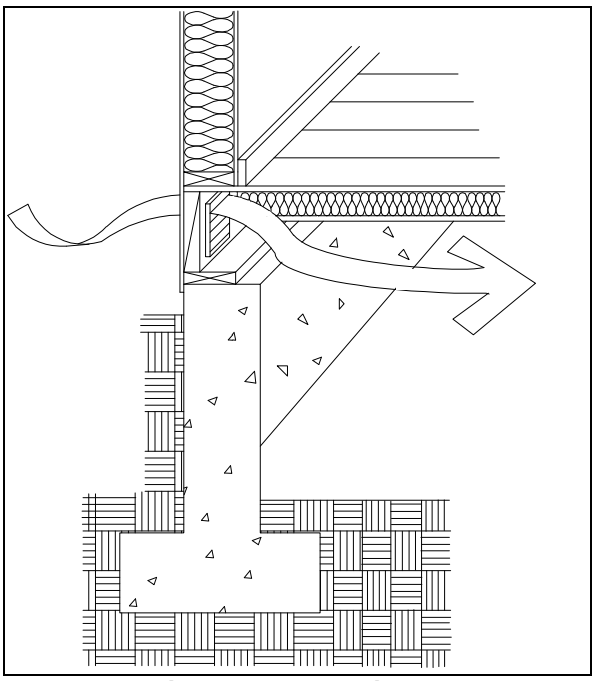

Figure G-4: Crawl Space

An exceptional method for analyzing the energy impact of buildings with raised floors that use foundation wall insulation and automatic crawl space vent dampers has been approved by the Energy Commission and is described under *Controlled Ventilation Crawl Space* in this *Glossary* and Chapter 7, Part 7.7.

Custom Energy Budget

See *Energy Budget*.

Decorative Gas Appliance

A decorative gas appliance is a *"*gas appliance that is designed or installed for visual effect only, cannot burn solid wood, and simulates a fire in a fireplace." [*EES*, Section 101]

A decorative gas appliance installed in a new residential building or addition cannot contain a continuously burning pilot light, and cannot use indoor air for cooling a firebox jacket if the indoor air is vented to the outside of the building. [*EES*, Section 101, 151(e)]

N.B.: Appliances that use indoor air for combustion cannot be used where compliance credit is taken for reduced building infiltration.

Degree Day, Heating

A heating degree day is "a unit, based upon temperature difference and time, used in estimating fuel consumption and specifying nominal annual heating load of a building. For any one day, when the mean temperature is less than 65°F, there exist as many degree days as there are Fahrenheit degrees difference in temperature between the mean temperature for the day and 65°F." [*EES*, Section 101]

Design Conditions

"Design conditions are the parameters and conditions used to determine the performance requirements of space conditioning systems. Design conditions for determining design heating and cooling loads are specified . . . in Section 150(h) for low-rise residential buildings." [*EES*, Section 101]

See also Chapter 2, Part 2.3.

Design Heat Gain

The design heat gain is "...the total calculated heat gain through the building envelope under design conditions." [*EES*, Section 101]

See also Chapter 2, Part 2.3.

Design Heat Loss

The design heat loss is "...the total calculated heat loss through the building envelope under design conditions." [*EES*, Section 101]

See also Chapter 2, Part 2.3.

Directly Conditioned Space

"Directly conditioned space is an enclosed space that is provided with wood heating, is provided with mechanical heating that has a capacity exceeding 10 Btu/(hr×ft²), or . . . mechanical cooling that has a capacity exceeding 5 Btu/(hr×ft²), unless the space conditioning system is designed and thermostatically controlled to maintain a process environment temperature less than 55°F or to maintain a process environment temperature greater than 90°F for the whole space that the system serves, or unless the space conditioning system is designed and controlled to be incapable of operating at temperatures above 55°F or incapable of operating at temperatures below 90°F at design conditions." [*EES*, Section 101]

Dominant Occupancy

In mixed occupancy buildings, the dominant occupancy is the occupancy type with the greatest percentage of total conditioned floor area (see Chapter 7, Part 7.2).

Door

See *Exterior Door*.

Dual-Glazed Greenhouse Windows

“Dual-Glazed Greenhouse Windows are a type of dual-glazed fenestration product which adds conditioned volume but no conditioned floor area to a building.” [*EES*, Section 101]

East-Facing

"East-facing is oriented to within 45 degrees of true east, including 45°0'0" south of east (SE), but excluding 45°0'0" north of east (NE)." [EES, Section 101]

This definition applies only to the the prescriptive packages and master plans analyzed according to the multiple orientation alternative as explained in Chapter 8, Part 8.4. In the computer methods the actual building orientation must be used, except in the case of master plans as stated above.

The designation “East-Facing” is also used in production buildings using orientation restrictions (e.g., Shaded Areas: East-Facing). See Chapter 8, Part 8.4.

EER (Energy Efficiency Ratio)

The energy efficiency ratio (EER) is “the ratio of net cooling capacity (in Btu/hr) to total rate of electrical energy (in watts), of a cooling system under designated operating conditions, as determined using the applicable test method in the Appliance Efficiency Regulation or Section 112." [*EES*, Section 101]

NOTE:

Since few residential buildings use air conditioners or heat pumps with an output capacity greater than 65,000 Btuh, the Low-Rise Residential Standards are expressed in terms of SEER and HSPF ratings, not EER or COP.

The EER of all central air conditioners and central heat pumps with output of 65,000 Btuh and over, manufactured on or after January 1, 1992, and all room air conditioners and room air conditioner heat pumps of 200 volts or more, manufactured on or after January 1, 1990, shall be certified not to be less than the following listed values:

Appliance	*Capacity*	*EER*
Central Air Conditioners		
	65,000 Btuh and over (up to 135,000 Btuh)	8.9
Central Air Source Heat Pumps		
	65,000 Btuh and over (up to 135,000 Btuh)	8.9
Central Water Source Heat Pumps		
	Up to 65,000 Btuh	9.3
	65,000 Btuh and over (up to 135,000 Btuh)	10.5

or the values listed in Table G-3 on the next page.

Table G-3 - Non-Central Space Cooling Equipment

Including Package Terminal Air Conditioners (PTAC); Package Terminal Heat Pumps (PTHP); Room Air Conditioners; and Room Air Conditioner Heat Pumps.

Equipment Type	Size Category (Input)	Sub-Category or Rating Condition	Minimum Efficiency	Test Procedure
PTAC (Cooling Mode)	All Capacities	95°F db Outdoor Air	10.0 - (0.16 x Cap/1000)[b] EER	ARI 310/380
		82°F db Outdoor Air	12.2 - (0.20 x Cap/1000)[b] EER	
PTHP (Cooling Mode)	All Capacities	95°F db Outdoor Air	10.0 - (0.16 x Cap/1000)[b] EER	
		82°F db Outdoor Air	12.2 - (0.20 x Cap/1000)[b] EER	
PTHP (Heating Mode)	All Capacities		2.9 - (0.026 x Cap/1000)[b] COP	
Room Air Conditioners, with Louvered Sides	< 6,000 Btu/h		8.0 EER	ANSI/AHAM RAC-1
	≥6,000 Btu/h and < 8,000 Btu/h		8.5 EER	
	≥ 8,000 Btu/h and < 14,000 Btu/h		9.0 EER	
	≥14,000 Btu/h and < 20,000 Btu/h		8.8 EER	
	≥20,000 Btu/h		8.2 EER	
Room Air Conditioners, without Louvered Sides	< 6,000 Btu/h		8.0 EER	
	≥6,000 Btu/h and < 20,000 Btu/h		8.5 EER	
	≥20,000 Btu/h		8.2 EER	
Room Air Conditioner Heat Pumps with Louvered Sides	All Capacities		8.5 EER	
Room Air Conditioner Heat Pumps without Louvered Sides	All Capacities		8.0 EER	
Room Air conditioners & Room Heat Pumps Not Covered by Federal Regulations				
Room Air Conditioners & Heat Pumps	200 volts or more		8.2 EER	10 Code of Federal Regs. Section 430.22(f)
Room Air Conditioners	Less than 200 volts		8.7 EER	
Room Heat Pumps			8.3 EER	

[b] Cap means the rated cooling capacity of the product in Btu/h. If the unit's capacity is less than 7000 Btu/h, use 7000 Btu/h in the calculation. If the unit's capacity is greater than 15,000 Btu/h, use 15,000 Btu/h in the calculation.

[c] Replacement units must be factory labeled as follows: "MANUFACTURED FOR REPLACEMENT APPLICATIONS ONLY; NOT TO BE INSTALLED IN NEW CONSTRUCTION PROJECTS." Replacement efficiencies apply only to units with existing sleeves less than 16-in. high and less than 42-in. wide.

COP and EER values may be interchanged according to the following conversion:

3413 Btu = 1 kWh

Therefore,

COP = 0.293 x EER

EER = 3.413 x COP

For equipment that is not tested for SEER the EER may be used as the SEER.

See *Heating, Ventilating and Air Conditioning*; *COP* and *SEER*.

Efficacy

"Efficacy is the ratio of light from a lamp to the electrical power consumed (including ballast losses), expressed in lumens per watt." [*EES*, Section 101]

See also *Lumens/Watt*.

Electric Resistance Heating

As mentioned in the explanation of *Energy Budget* in this *Glossary*, electricity is inherently less efficient than gas as a heating energy source because it must account for losses associated with generation from depletable fossil fuels and transmission to the building site. A source energy multiplier of 3.0 (representing a net efficiency of 33 percent) is assigned to electricity by the standards. Table G-11 lists the number of Btu of source energy per kilowatt-hour of electricity.

Electric resistance baseboard heaters are assumed to have a property line efficiency of 1.00 and an equivalent HSPF of 3.413.

Electric radiant heating panels may be assigned a slightly higher efficiency of 1.04 (equivalent HSPF of 3.550) owing to their mode of delivering sensible heat if the following criteria are met:

1. The radiant heating is installed on the interior surface of the building envelope.
2. The radiant surface is not likely to be behind furnishings (i.e. it is installed high on a wall or on a ceiling).
3. The radiant surface is not designed with fins or covers.
4. The radiant surface does not use a fan to deliver its heat.

Enclosed Space

"Enclosed space is space that is substantially surrounded by solid surfaces." [*EES*, Section 101]

Energy Budget

“Energy budget is the maximum amount of source energy that a proposed building, or portion of a building, can be designed to consume, calculated with the approved procedures specified in Title 24, Part 6.” [*EES*, Section 101]

The low-rise residential standards are based upon the concept of an annual energy budget. This is the measure of source energy used per year in a building. The energy budget for low-rise residential buildings includes space heating, space cooling and domestic water heating. To comply with the standards, the energy use of the proposed building design must be less than the annual energy budget.

The standard design is made up of features required in prescriptive package D and are used to determine the annual energy budget. Each approved computer method automatically generates a custom energy budget by calculating the annual energy use of the standard design.

The energy budget allows a "trade-off" of part of the space conditioning budget for part of the water heating budget, or vice versa. This is explained further in Chapter 5, Part 5.2.

The space conditioning component of the energy budget is measured in thousands of British thermal units (kBtu) consumed per square foot of conditioned floor area per year. Water heating is calculated in kBtu per dwelling unit per year and then divided by the building floor area to convert to kBtu per square foot per year.

Source energy accounts for all of the energy used in delivering energy to the building site including power generation, transmission and distribution. See *Source Energy* for conversion rates. See *Glossary* Table G-11 for source energy conversion rates for electricity, natural gas, fuel oil and propane.

See also *Proposed Design, Standard Design*, and *Source Energy*.

Energy Efficiency Standards

The California state energy standards as set forth in the California Code of Regulations, Title 24, Part 6 (see Chapter 1, Part 1.1).

Energy Factor (EF)

Used to measure the efficiency of water heaters, the Energy Factor (EF) is "the ratio of energy output to energy consumption of a water heater, expressed in equivalent units, under designated operating conditions over a 24-hour use cycle, as determined using the applicable test method in the Appliance Efficiency Regulations." [*EES*, Section 101]

The Energy Factor of all new small water heaters manufactured on or after April 15, 1991 shall be certified to be not less than the following:

Water Heater Type	*Energy Factor*
Gas	0.62 - (.0019 x V)
Electric (including Heat Pump)	0.93 + (.00132 x V)
Oil	0.59 - (.0019 x V)

"V" equals rated volume in gallons.

Energy Obtained From Depletable Sources

"Energy obtained from depletable sources is electricity purchased from a public utility, or energy obtained from burning coal, oil, natural gas, or liquefied petroleum gases." [*EES*, Section 101]

Energy Obtained From Nondepletable Sources

Also referred to as renewable energy, including solar and wind power, energy from non-depletable sources is defined as energy that is not obtained from depletable sources. [*EES*, Section 101]

Enforcing Agency

The enforcing agency is "the city, county, or state agency responsible for issuing a building permit." [*EES*, Section 101]

Evaporative Cooler

Evaporative coolers may be installed as an alternative to air conditioning, particularly in climate zones with dry air. These systems use water evaporation and air circulation to provide cooling. Evaporative coolers use less energy for cooling than minimum efficiency air conditioners, so the Energy Commission has established higher SEERs to use when modeling them for compliance. See Chapter 8, Part 8.10 for details on this credit, including eligibility and installation criteria.

Evaporative coolers provide cooling to a building by either direct contact with water (direct evaporative cooler), or a combination of a first stage heat exchanger to pre-cool building air temperature and a second stage with direct contact with water (indirect/direct evaporative cooler).

Credit for evaporative coolers is allowed in either single-family detached or single-family attached residences. *No credit is allowed for evaporative coolers in multi-family buildings*. See Chapter 8, Part 8.10 for the credit and installation criteria.

NOTE:

In hot and humid climates, the following characteristics of evaporative cooling should be considered:

- Direct evaporative coolers in climates that are both hot and humid may result in uncomfortable indoor humidity levels.
- Indirect/direct evaporative coolers do not increase indoor humidity as much as direct systems, and would be unlikely to produce uncomfortable indoor humidity levels, even in hot, humid areas.
- Evaporative coolers may not reduce indoor temperatures to the same degree as air conditioning.

See Chapter 8, Part 8.10.

Exceptional Method

If an "alternative calculation method [ACM] analyzes designs, materials, or devices that cannot be adequately modeled using the public domain computer programs, the method may be approved [by the Commission] as an exceptional method. Applications for approval of exceptional methods shall include theoretical and empirical information that verify the method's accuracy, and shall also include the other documentation and fees required by subsection 10-109(b)." [*EES*, Section 109(b)4]

Two examples of exceptional methods are the controlled ventilation crawl space (CVC) credit (see *Glossary* entry and Chapter 8, Part 8.7) and the combined hydronic space and water heating method (see Chapter 5, Part 5.4P and Chapter 8, Part 8.9). Other exceptional methods are also

included in Chapter 8. Exceptional methods can be approved at any time. The Energy Commission distsributes a public notice whenever such methods are approved with instructions for achieving the alloted credit.

Exfiltration

Exfiltration is unwanted conditioned air leakage from a building. This term is usually mentioned in conjunction with infiltration. All compliance approaches require some type of infiltration/ exfiltration controls as described later in this Glossary and in Chapter 2, Part 2.2.

Exterior Door

An exterior door is any openable opaque surface that separates conditioned and unconditioned space. A door with one half or less of the surface area as glazing is an exterior door. A door with more than 50 percent of its surface area made up of glazing is a fenestration product. [*EES*, Section 101] This distinction affects labeling and certification requirements for the product.

Glass in doors must be counted as part of the total fenestration area. The area to be included must be either the entire door area or the actual area of the glazing plus a two inch frame extension on all sides.

Any door that receives an NFRC rating should be modeled as an entire fenestration unit with the rated U-value and solar heat gain coefficient (these values are based on the entire product, including the framing).

Solid (opaque) door area is ignored in the prescriptive packages but must be included in the computer performance approach (see Chapter 5, Part 5.4B).

Exterior Floor/Soffit

An exterior floor or soffit is "a horizontal exterior partition, or a horizontal demising partition, under conditioned space. For low-rise residential occupancies, exterior floors also include those on grade." [*EES*, Section 101]

Exterior Partition

An exterior partition is “an opaque, translucent, or transparent solid barrier that separates conditioned space from ambient air [outdoors] or space that is not enclosed. For low-rise residential occupancies, exterior partitions also include barriers that separate conditioned space from unconditioned space, or the ground." [*EES*, Section 101]

Exterior Roof/Ceiling

An exterior roof or ceiling is "...an exterior partition, or a demising partition, that has a slope less than 60 degrees from horizontal, that has conditioned space below, and that is not an exterior skylight." [*EES*, Section 101]

Exterior Wall

An exterior wall "is any wall or element of a wall, or any member or group of members, which defines the exterior boundaries or courts of a building and which has a slope of 60 degrees or greater with the horizontal plane. An exterior wall or partition is not an exterior floor/soffit, exterior door, exterior roof/ceiling, window, skylight, or demising wall. [*EES*, Section 101]

Exterior Wall Area

"Exterior wall area is the area of the opaque exterior surface of exterior walls." [*EES*, Section 101]

An exterior wall is distinguished from an exterior roof/ceiling by its angle of tilt. A wall is a surface with a tilt of greater than or equal to 60 degrees measured from the horizontal.

The area of bermed (underground) walls between conditioned space and below grade is treated differently depending on the compliance approach. See Chapter 3 (prescriptive) or Chapter 5 (computer) for the correct procedures for below grade walls in a conditioned space.

Fenestration Area (Glazing Area)

Fenestration area is defined as the area of all fenestration products (i.e., windows, skylights and glass doors) in exterior openings, including the sash or frame area. The nominal area (from nominal dimensions such as $4^{o}4^{o}$) or rough opening is also acceptable.

For details on calculating fenestration area for glass doors, see *Exterior Door*.

Where the term "glazing area" is used in the standards it means the entire fenestration area, not just the area of glazing, unless stated otherwise (see Figure G-5).

See *Fenestration Product*, *Glazing* and *Shading*.

Fenestration Product

A fenestration product is: “any transparent or translucent material plus any sash, frame, mullions, and dividers, in the envelope of a building, including, but not limited to: windows, sliding glass doors, french doors, skylights, curtain walls, garden windows, and other doors with a glazed area of more than one-half of the door area.” [*EES*, Section 101]

Table G-4 contains default values for fenestration product U-value from Section 116 of the standards. Default values for Solar Heat Gain Coefficient are found under the heading *Shading* in this Glossary. Additional information contained in this manual is:

- An explanation of glazing terminology and thermal performance rating system for all fenestration products in Chapter 8, Part 8.5.
- Certification, labeling and mandatory requirements for fenestration products are included in Chapter 2.
- Additions and alterations compliance issues related to fenestration are discussed in Chapter 7.
- Fenestration topics related to prescriptive and computer compliance are found in chapters 3 and 5.

Fireplace

A fireplace is a “hearth and fire chamber or similar prepared place in which a solid fuel fire may be burned, as defined in UBC Section 3102 ; these include but are not limited to factory-built fireplaces, masonry fireplaces, and masonry heaters." [*EES*, Section 101]

See Chapter 2, Part 2.2 and Figure 2-6 for mandatory requirements regarding fireplace installation.

Floor Area

See *Conditioned Floor Area*.

Footprint Area

See *Conditioned Footprint Area*.

Fossil Fuels

Fossil fuels are fuels which are derived from natural gas, coal, oil and liquefied petroleum products. These are generally nonrenewable resources, although natural gas may also be produced by other means, such as biomass conversion.

Framing Effects

The type and amount of framing in walls, roofs/ceilings and floors affects the overall U-value of the surface. For compliance, fixed values for wood framing percentages must be used when a parallel path U-value is calculated. Alternatively, precalculated U-values that include frame effects may be used for both wood and metal frame assemblies. Refer to Tables G-12 through G-16 and the *R-Value* discussion of this *Glossary*.

Front

The primary entry side of the building (front facade) used as a reference in defining the orientation of the building or unit plan (see Chapter 5, Part 5.4A and Figure 5-2). The orientation of the front facade may not always be the same as that for the front door itself.

This designation is used on the Certificate of Compliance (CF-1R form) to indicate the orientation of a custom building (e.g., Front Entry Orientation: North). See also *North-Facing*, *East-Facing*, etc.

Gas Heating System

See *Heating*, *Ventilation* and *Air Conditioning*.

Gas Log

A gas log is "a self-contained, free-standing, open-flame, gas-burning appliance consisting of a metal frame or base supporting simulated logs and designed for installation only in a vented fireplace." [*EES*, Section 101]

Table G-4: DEFAULT FENESTRATION PRODUCT U-VALUES

Frame Type[1]	Product Type	Single Pane U-value	Double Pane U-value[2]
Metal	Operable	1.28	0.87
Metal	Fixed	1.19	0.72
Metal	Greenhouse/Garden window	2.26	1.40
Metal	Doors	1.25	0.85
Metal	Skylight	1.72	0.94
Metal, Thermal Break	Operable		0.71
Metal, Thermal Break	Fixed		0.60
Metal, Thermal Break	Greenhouse/Garden window		1.12
Metal, Thermal Break	Doors		0.64
Metal, Thermal Break	Skylight		0.80
Non-Metal	Operable	0.99	0.60
Non-Metal	Fixed	1.04	0.57
Non-Metal	Doors	0.99	0.55
Non-Metal	Greenhouse/Garden windows	1.94	1.06
Non-Metal	Skylight	1.47	0.68

[1] Metal includes any field-fabricated product with metal cladding. Non-metal framed manufactured fenestration products with metal cladding must add 0.04 to the listed U-value. Non-Metal frame types can include metal fasteners, hardware, and door thresholds. Thermal break product design characteristics are:

a. The material used as the thermal break must have a thermal conductivity of not more than 3.6 Btu-inch/hr/ft^2/°F,
b. The thermal break must produce a gap of not less than 0.210", and
c. All metal members of the fenestration product exposed to interior and exterior air must incorporate a thermal break meeting the criteria in (a) and (b) above.

In addition, the fenestration product must be clearly labeled by the manufacturer that it qualifies as a thermally broken product in accordance with this standard.

[2]For all dual glazed fenestration products, adjust the listed U-values as follows:

a. Subtract 0.05 for spacers of 7/16" or wider.
b. Subtract 0.05 for products certified by the manufacturer as low-E glazing.
c. Add 0.05 for products with dividers between panes if spacer is less than 7/16" wide.
d. Add 0.05 to any product with true divided lite (dividers through the panes).

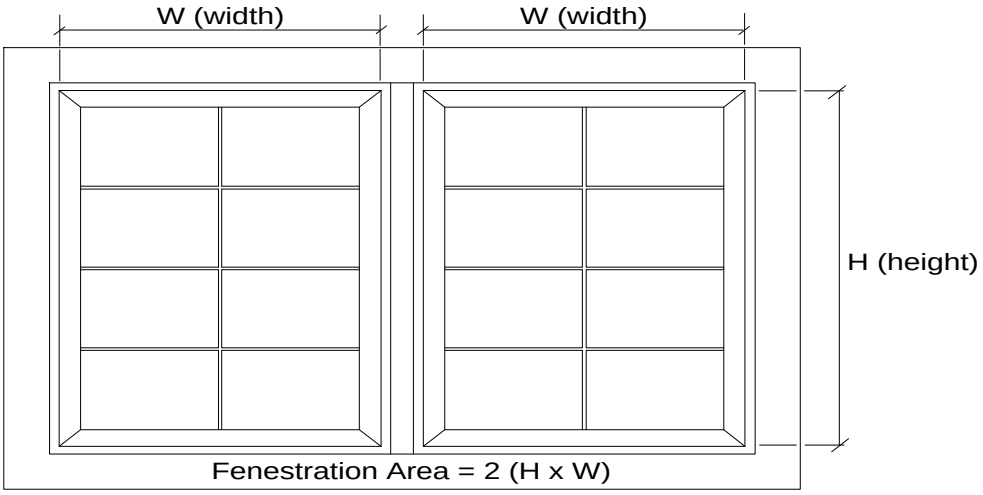

Figure G-5: Fenestration Area

General Lighting

"General lighting is lighting designed to provide a substantially uniform level of illumination throughout an area, exclusive of any provision for special visual tasks or decorative effect. When designed for lower-than-task illuminance used in conjunction with other specific task lighting systems, it is also called "ambient" lighting." [*EES*, Section 101]

As used for kitchen lighting, general lighting must provide a sufficient light level for basic kitchen tasks and provide a uniform pattern of illumination. [*EES*, Section 150(k)1]

See also *Lighting*, *Task Lighting* and Chapter 2, Part 2.5.

Geothermal Heat Pump

A heat pump that uses the earth as a source of energy for heating and a sink for energy when cooling. Some systems pump water from an acquifer in the ground and return the water to the ground after transferring heat from or to the water. A few systems use refrigerant directly in a loop of piping buried in the ground. Those heat pumps that use either a water loop or pump water from an acquifer have efficiency test methods that are accepted by the Energy Commission. These efficiency values are certified to the Energy Commission by the manufacturer and are expressed in terms of heating Coefficient of Performance (COP) and cooling Energy Efficiency Ratio (EER).

See part 8.11.

Glazing

Glazing is defined as the translucent portion of any fenestration product, typically glass.

See *Fenestration Product* and *Shading*, and Chapter 8, Part 8.5.

Ground Floor Area

For compliance, the ground floor area is defined as the slab-on-grade area of a slab-on-grade building and the conditioned footprint area of a raised floor building.

Ground Source Heat Pump

See *Geothermal Heat Pump*.

Habitable Story

A habitable story in a building is a story that "contains space in which people may work or live in reasonable comfort. A habitable story is defined as having at least 50 percent of its volume above grade." [*EES*, Section 101] The standards use this definition to determine whether a building is high-rise or low-rise.

See also *Conditioned Floor Area*, *High-Rise Residential* and *Low-Rise Residential*.

Heat Capacity (HC)

The heat capacity of an assembly is “the amount of heat necessary to raise the temperature of all the components of a unit area in the assembly one degree F. It is calculated as the sum of the average thickness times the density times the specific heat for each component, and is expressed in Btu per square foot per degree F." [*EES*, Section 101]

See *Areal Heat Capacity*.

Heat Pump

A heat pump is an air conditioner capable of heating by refrigeration. It may or may not include a capability for cooling. Outside air or water is used as a heat source or heat sink, depending upon whether the system is heating or cooling.

Heat pump efficiency is measured according to the HSPF rating (see HSPF) which is a function of both the condensing unit (compressor) and the type of coil selected to be used with it. Equipment manufacturers typically list efficiencies only of certain compressor-coil combinations.

Heat pumps may be either split system or single packaged units as defined above under Air Conditioner.

See also *HSPF (Heating Seasonal Performance Factor)*.

Heating, Ventilating and Air Conditioning (HVAC)

The mechanical heating, ventilating and air conditioning system of the building is also known as the HVAC system. The standards use various measures of equipment efficiency defined according to the type of equipment installed.

Gas (fossil fuel) heating equipment is rated according to its Annual Fuel Utilization Efficiency (AFUE). The heating efficiency of electric heat pumps with less than 65,000 Btuh cooling capacity is rated according to Heating Seasonal Performance Factor (HSPF). The heating efficiency of heat pumps with cooling capacity of 65,000 Btuh or more is rated according to Coefficient of Performance (COP). Electric resistance heating is rated according to its HSPF.

All electric cooling with less than 65,000 Btuh output capacity is rated according to the Seasonal Energy Efficiency Ratio (SEER). Electric cooling with an output capacity of 65,000 Btuh or more is rated according to its Energy Efficiency Ratio (EER). (Heat pump cooling is rated according to its SEER or EER, and heat pump heating by the HSPF or COP).

Since few residential buildings use air conditioners or heat pumps with an output capacity greater than 65,000 Btuh, the Low-Rise Residential Standards only use SEER and HSPF ratings, not EER or COP.

Air Conditioners

See *Air Conditioner* in this Glossary.

Certification

Commission regulations specify that:

"Any appliance for which there is a California standard established in the Appliance Efficiency Regulations may be installed only if the manufacturer has certified to the Commission, as specified in those regulations, that the appliance complies with the applicable standard for that appliance." [*EES*, Section 111]

HVAC equipment subject to certification includes:

- Room air conditioners
- Central air conditioners with a cooling capacity less than 135,000 Btu/hr
- Central air conditioning heat pumps
- Fan type central furnaces with input rate less than 400,000 Btu per hour
- Boilers
- Wall furnaces
- Floor furnaces
- Room heaters
- Unit heaters
- Duct furnaces

The following types of gas space heaters do not need to be certified:

- Gravity type central furnaces
- Heaters installed in mobile homes at the time of construction

- Heaters designed expressly for use in recreational vehicles and other mobile equipment
- Fan type central furnaces with input rates of at least 400,000 Btu per hour
- Infrared heaters

See *EES*, Secion 110, Chapter 2, Part 2.4, and the *Appliance Efficiency Regulations* for further information concerning certification and efficiency requirements for appliances, including refrigerators, water heaters, plumbing fittings and fluorescent lamp ballasts.

Directories of certified heating and cooling systems can be accessed or obtained according to information provided in Appendix E.

Equipment efficiencies and other specifications listed in the directories can also be obtained by contacting the Commission Energy Hotline (see Chapter 1, Part 1.6) or from the Commission's website at www.energy.ca.gov/efficiency/-appliances/.

Combined Hydronic Space and Water Heating

For a discussion of combined hydronic space and water heating, see Chapter 5, Part 5.4P and Chapter 8, Part 8.9.

Duct Losses

The mandatory minimum insulation R-value for ducts that carry conditioned air (heated or cooled) through conditioned space is R-4.2, unless the *Uniform Mechanical Code* requires a higher insulation level. (See Chapter 2, Part 2.4 for complete information on duct construction and mandatory duct requirements). For space conditioning systems without ducts, or where ducts are located wholly within conditioned space, or where duct insulation exceeds R-4.2, credit for reduced duct heat losses and gains is accounted for in the computer compliance approach (see Chapter 5). See Chapter 4 for diagnostic testing and verification of duct performance.

Efficiency Conversions

When equipment is not tested for SEER, the EER may be used as the SEER. When heat pump equipment is not tested for HSPF, the following conversions may be assumed:

Through-the-wall heat pump = 6.6 HSPF (no credit for duct efficiency is allowed)

Central air conditioning heat pumps, HSPF = (3.2 x COP) - 2.4

Electric Resistance Heating

See *Electric Resistance Heating* in this Glossary.

Gas Furnaces, *Room Heaters* and *Boilers*

Heating systems that utilize natural gas, liquefied petroleum gas or oil are rated by the Energy Commission according to their Annual Fuel Utilization Efficiency (AFUE).

For gas fan type central furnaces manufactured on or after January 1, 1992 the minimum allowed AFUE is 78 percent. See *AFUE* for other types of equipment.

The following gas space heaters are exempt from this requirement:

- Gravity type central furnaces
- Fan type central furnaces with input rates at least 400,000 Btu per hour
- Infrared heaters

Table 1-C of the standards states that gas-fired warm air furnaces greater than or equal to 225,000 Btuh must have 80 percent thermal efficiency at maximum rated capacity.

Heat Pump

See *Heat Pump* in this Glossary.

Packaged Air Conditioner

A packaged air conditioner combines both condenser and air handling capabilities in a single packaged unit.

Split System Air Conditioner

A split system air conditioner has physically separate condenser and air handling units that work together as a single cooling system.

Wood Heater

Wood heaters and the compliance guidelines and installation criteria are in Chapter 8, Part 8.6.

Zonal Control

See *Zonal Control* in this Glossary, and criteria for obtaining credit for such systems is explained in Chapter 8, Part 8.8.

High-Rise Residential

A high-rise residential building is “a building, other than a hotel/motel, of occupancy group R-1 with four or more habitable stories." [*EES*, Section 101]

All hotels and motels, regardless of the number of stories, and multi-family residential buildings with four or more habitable stories must comply with Sections 120 through 149 of the standards (Nonresidential and High-Rise Residential Standards), rather than Sections 150 through 152 (Low-Rise Residential Standards).

See Chapter 1, Part 11.2.

HSPF (Heating Seasonal Performance Factor)

The Heating Seasonal Performance Factor (HSPF) is “the total heating output of a heat pump (in British thermal units) during its normal usage period for heating divided by the total electrical energy input (in watt-hours) during the same period, as determined using the applicable test method in the Appliance Efficiency Regulations." [*EES*, Section 101]

HSPF is the heating efficiency measure used for heat pumps and electric furnaces under the current standards. Derived from laboratory tests mandated by the U.S. Department of Energy, the HSPF predicts the Btu of heat output for each watt-hour of input electricity for an average U.S. climate.

HSPF is a rating designed to allow the consumer to easily compare one heat pump with another on the basis of nominal efficiency and, as such, is a reasonable predictor of relative performance.

All air-cooled central air conditioning heat pumps manufactured on or after January 1, 1992 must have the HSPF values listed below:

Appliance	HSPF
Central Air Source Heat Pumps up to 65,000 Btuh:	
Split System	6.8
Single Package	6.6

For equipment that is not tested for HSPF, the following conversions may be assumed:

- Through-the-wall heat pump = 6.6 HSPF (no credit for duct efficiency is allowed)
- Central air conditioning heat pumps that do not have an HSPF rating for heating but have a COP rating, HSPF = (3.2 x COP) - 2.4

See *Heating*, *Ventilating* and *Air Conditioning* and *Coefficient of Performance (COP)*.

HVAC

See *Heating*, *Ventilating* and *Air Conditioning.*

Hydronic Space Heating

A hydronic space heating system is one using water heating equipment, such as a storage tank water heater or a boiler, to provide space heating. Hydronic space heating includes both radiant floor systems and convective or fan coil systems. The method for analyzing hydronic space heating systems is explained in Chapter 5, Part 5.4P and Chapter 8, Part 8.9.

See also *Combined Hydronic Space/Water Heating*.

Indirectly Conditioned Space

“Indirectly conditioned space is enclosed space including, but not limited to, unconditioned volume in atria, that (1) is not directly conditioned space; and (2) either (a) has an area-weighted heat transfer coefficient to directly conditioned space exceeding that to the outdoors or to unconditioned space, or (b) is a space through which air from directly conditioned spaces is transferred at a rate exceeding 3 air changes per hour.” [*EES*, Section 101]

Indirectly conditioned space must be included when calculating total conditioned floor area. Examples of areas that *may* be indirectly conditioned space include enclosed porches, enclosed sunrooms, laundry rooms and furnace closets. See Figure G-6 for an example.

Infiltration

“Infiltration is uncontrolled inward air leakage from outside a building, or unconditioned space, including leakage through cracks and interstices, around windows and doors, and through any other exterior or demising partition or pipe or duct penetration.” [*EES*, Section 101]

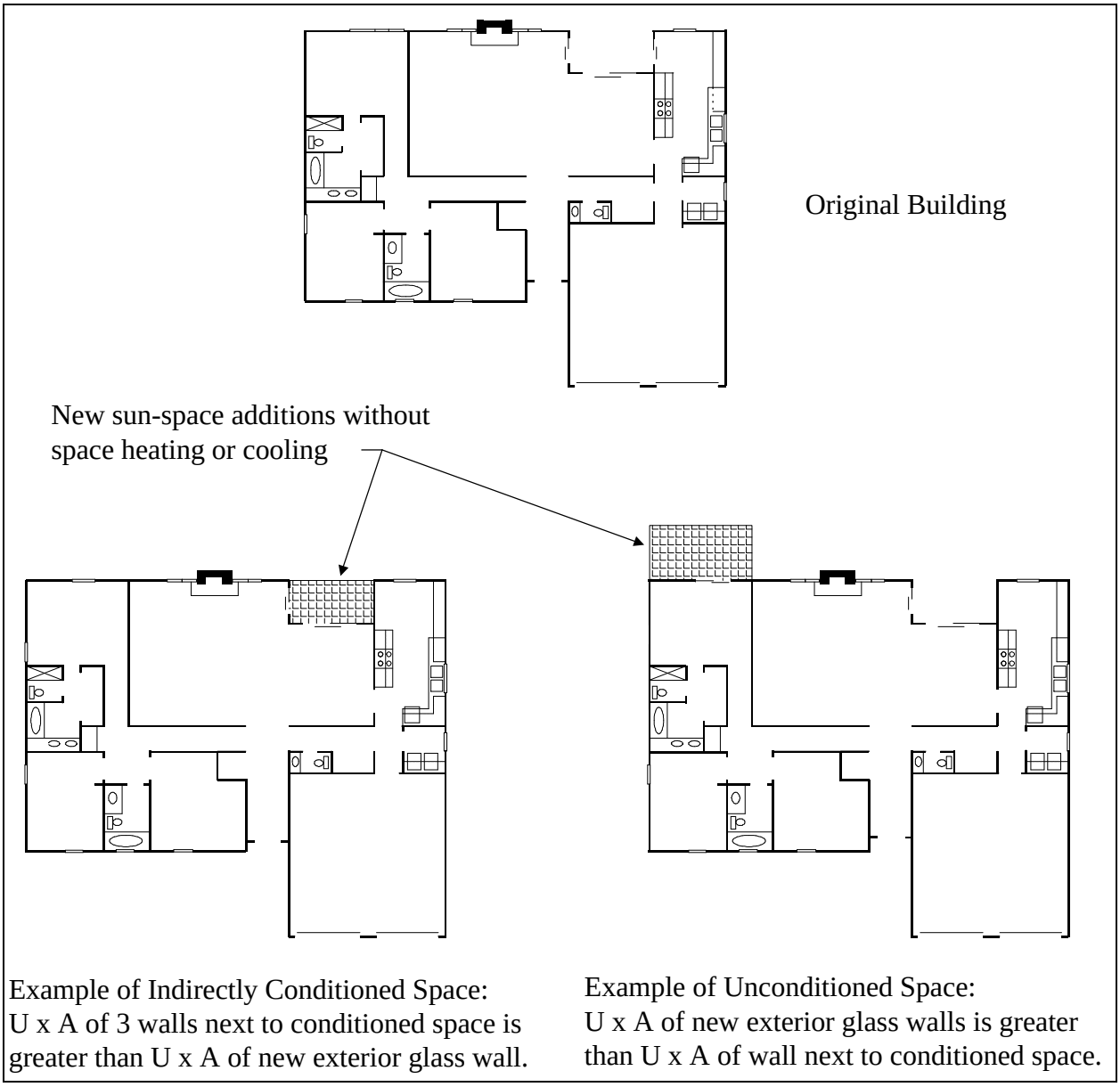

Figure G-6: Unconditioned vs. Indirectly Conditioned

Infiltration Controls

Infiltration of air can be controlled in various ways, many of which are mandatory measures and therefore considered "standard" in new residential construction. Mandatory Infiltration control measures include weatherstripping, caulking and sealing in and around all exterior joints and openings as explained in Chapter 2.

See Chapter 4 for diagnostically measured infiltration reduction in the performance approach. For the prescriptive approach, "tight" infiltration controls are only required for compliance with Alternative Component Package B in Climate Zones 1, 14, 15, and 16. Tight controls include all the standard requirements, plus a continuous infiltration barrier that meets Energy Commission quality standards and a mechanical ventilation system with an air-to-air heat exchanger that can ventilate at 0.7 air changes per hour or higher. See Special Infiltration Barrier and Vapor Barrier in Chapter 2, Part 2.3,. and Continuous Infiltration Barrier and air-to-air heat exchanger in Chapter 3, Part 3.2 for additional information including installation requirements.

Insulation

Insulating material of the types and forms listed in 118(a) of the standards (Chapter 2, Part 2.3) “may be installed only if the manufacturer has certified that the insulation complies with the California Quality Standards for Insulating Material, Title 20, Chapter 4, Article 3.” [*EES*, Section 118(a)]

Insulation must be placed within or contiguous with a wall, ceiling or floor, or over the surface of any appliance or its intake or outtake mechanism for the purpose of reducing heat transfer or reducing adverse temperature fluctuations of the building, room or appliance.

Insulation may be installed in wall, ceiling/roof and raised floor assemblies and at the edge of a slab-on-grade. Movable insulation is designed to cover windows and other glazed openings part of the time to reduce heat loss and heat gain.

Insulation R-Value

The R-value of insulation or any material or building component is the measure of its thermal resistance expressed in ft2-hr-°F/Btu (see R-Value). This value may be obtained from Appendix B or from manufacturer's literature.

The rated R-value of mineral fiber (batt) insulation is based upon its fully expanded thickness. When the insulation is compressed, the R-value is reduced. For example, an R-19 batt of insulation expands to a thickness of 6 inches. If it is compressed into 2x6 framing with an actual depth of 5.5 inches, the insulation R-Value is lowered to R-17.8. See Table G-5 for some common compressed insulation values.

Table G-5: R-Values for Compressed Mineral Fiber Batt Insulation[1]

Standard Compressed R-Value	Nominal Lumber Size	Actual Cavity Depth	R-Value
13 (3.625")	2x4	3.5"	13
19 (6.25")	2x6	5.5"	17.8
22 (6.75")	2x6	5.5"	20
30 (9.5")[2]	2x10	9.25"	30
38 (12")[2]	2x12	11.25"	37

1. Based on manufacturer's data.
2. Note that batt insulation with these R-values is available in smaller thicknesses. R-30 may be achieved with an 8.25" to 8.5" batt, and R-38 may be achieved with a 10.25" to 10.5" batt. If this thinner insulation is used in the framing sizes listed here, the insulation would retain its full rated R-value because it would not be compressed.

Interior Partition

An interior wall or floor/ceiling that separates one area of conditioned space from another within the building envelope.

Left

"Left" indicates the left side of the building as one faces the front facade from the outside (see Front).

This designation is used on the Certificate of Compliance (CF-1R form) to indicate the orientation of fenestration (e.g., Left-East). See also *West-Facing*, etc.

Lighting

The lighting requirements in the low-rise Residential Standards are the mandatory measures for kitchen and bathroom lighting, and for incandescent lighting fixtures recessed into insulated ceilings (*EES*, 150(k)).

Both kitchens and rooms containing a bathtub or shower are required to have at least one luminaire with lamps that have an efficacy of at least 40 lumens per watt. For kitchens, this luminaire must be used for general lighting (see *General Lighting*). For bathrooms, the standards allow an alternative to the requirement by (1) installing the 40 lumens per watt fixture in a utility room, laundry room, or garage, and (2) installing 40 lumens per watt fixtures in all permanently mounted outside fixtures or equipping the fixtured with a motion sensor. There are additional mandatory requirements and installation criteria contained in Chapter 2, Part 2.5.

Table 2-6 lists typical lamp and lamp/ballast efficacies. Fluorescent lamps are generally used to meet these requirements. Screw-in compact fluorescents, however, are used with medium base incandescent lamp sockets, so they do not qualify. Hard-wired compact fluorescents where the ballast is part of the luminaire and that have an efficacy of at least 40 lumens per watt do meet these requirements.

See Chapter 2, Part 2.5 for a complete explanation of all the mandatory lighting requirements, including installation criteria.

Low-Rise Residential

Any building of occupancy group R, excluding all hotels, all motels and apartment buildings with four or more habitable stories.

Lumens/Watt

A lumen is a measure of the amount of light available from a given light source. A watt is a measure of the power requirement for that light source. The efficacy of a light source is measured by dividing the lumens by the wattage. The more usable light that a light source provides per watt, the greater its energy efficiency.

Manufactured Device

A manufactured device is “any heating, cooling, ventilation, lighting, water heating, refrigeration, cooking, plumbing fitting, insulation, door, fenestration product, or any other appliance, device, equipment or system subject to Sections 110 through 119 of Title 24 Part 6." [*EES*, Section 101]

Mixed Occupancy

A building designed and constructed for more than one type of occupancy, such as a three story building with ground floor retail and second and third floor residential apartments (see Chapter 8, Part 8.2).

Multi-Family

A dwelling unit of occupancy type R, as defined by the *UBC*, sharing a common wall and/or ceiling/floor with at least one other dwelling unit (see Chapter 8, Part 8.1). See also *Building Type*.

NFRC

The National Fenestration Rating Council. A national organization of manufacturers of fenestration products, glazing and related materials, plus utilities, state energy offices, laboratories, home builders, specifiers (architects) and public interest groups.

This organization is responsible for rating the U-values and solar heat gain coefficient of manufactured fenestration products (i.e., windows, skylights, glazed doors) that must be used in compliance calculations. All manufactured fenestration products must be labeled with NFRC rated values or with the default U-values listed in Table G-4 for compliance with the standards (see also Chapter 2, Part 2.3 and Chapter 8, Part 8.5).

See also *Fenestration Area* and *Fenestration Product*.

North-Facing

"North-facing is oriented to within 45 degrees of true north, including 45°0'0" east of north (NE), but excluding 45°0'0" west of north (NW)." [*EES*, Section 101]

This definition applies only to the prescriptive packages and master plans analyzed according to the multiple orientation alternative as explained in Chapter 8, Part 8.4. In the computer methods the actual building orientation must be used, except in the case of master plans as stated above.

Outside Air

"Outdoor air (Outside air) is air taken from outdoors and not previously circulated in the building." [*EES*, Section 101]

Proposed Design

The proposed building design which must comply with the standards before receiving a building permit. See also *Energy Budget* and *Standard Design*.

Radiant Barriers

The Energy Commission has approved an energy credit for radiant barriers meeting specific eligibility and installation criteria. The radiant barrier energy credit is an adjustment to the ceiling U-value when the ceiling is adjacent to an attic with a radiant barrier. The credit is available only with computer compliance with an energy budget. See Chapter 8, Part 8.13 for details on the required eligibility and installation criteria. See Chapter 5, Part 5.4N for modeling details.

Raised Floor

A "raised floor is a floor (partition) over a crawl space, or an unconditioned space, or ambient air." [*EES*, Section 101]

See Chapters 3 and 5, and the *Glossary* definition of *Conditioned Footprint Area*.

Readily Accessible

“Readily accessible is capable of being reached quickly for operation, repair, or inspection, without requiring climbing or removing obstacles, or resorting to access equipment." [*EES*, Section 101]

Rear

See *Back*.

Recovered Energy

"Recovered energy is energy used in a building that (1) is mechanically recovered from space conditioning, service water heating, lighting or process equipment after the energy has performed its original function; (2) provides space conditioning, service water heating or lighting; and (3) would otherwise be wasted." [*EES*, Section 101]

An air-to-air heat exchanger is an example of a system that recovers energy of this kind.

Recovery Efficiency

Recovery efficiency is one measure of the efficiency of water heaters. It is required for water heating energy calculations for some types of water heaters (see Chapter 6). It is “a measure of the percentage of heat from combustion of gas or oil which is transferred to the water. For non-storage type water heaters, the recovery efficiency is really a thermal efficiency." [*AER*, Section 1602]

Repair

“Repair is the reconstruction or renewal of any part of an existing building for the purpose of its maintenance. Note: Repairs to low-rise residential buildings are not within the scope of these standards.” [EES, Section 101]

Right

"Right" indicates the right side of the building as one faces the front facade from the outside (see *Front*). This designation is used on the Certificate of Compliance (CF-1R form) to indicate the orientation of fenestration (e.g., Right-West). See also *North-Facing*, *East-Facing*, etc.

Roof

See *Exterior Roof/Ceiling*.

R-Value (Thermal Resistance)

The R-value of a material is “the [thermal] resistance of a material or building component to the passage of heat in (hr x ft^2 x ºF)/Btu." [*EES*, Section 101]

The R-value indicates how well a material prevents heat from flowing through it. R-19 insulation, for example, is only half as effective at slowing heat transfer as R-38 insulation.

When more than one material is put in series with another in a construction assembly (such as exterior siding, insulation and interior gypsum board), the thermal resistance of the assembly is equal to the sum of the individual resistances (see Figures G-7 and G-8).

NOTE:

For heat flow through a series of layers adding the U-values of the individual layers of an assembly does not produce the total U-value. Thermal resistances (R-values) must first be added and the total resistance (R_{Total}) divided into 1 to yield the correct U-value.

Correct:

$$U = \frac{1}{R_1 + R_2 + ... + R_n} = \frac{1}{R_{Total}}$$

Incorrect:

$$U = \frac{1}{R_1} + \frac{1}{R_2} + ... + \frac{1}{R_n} = U_1 + U_2 + ... + U_n$$

The inverse of the total R-value is the U-value:

$$U = 1/R_{Total}$$

The U-value is the heat transfer coefficient expressed in Btu/ft^2-hr-^{o}F, the rate at which heat flows through an assembly or material.

The total R-value should be calculated to two decimal places, and the total U-value to three decimal places.

Default R-values/U-values in Appendix H

Appendix H contains pre-calculated Form 3Rs for a number of standard assemblies. The Total R-values and U-values from these assemblies must be used in compliance calculations unless a Form 3R is completed for the actual proposed assembly, or unless the compliance approach only uses the insulation level alone. Tables G-12 through G-16 summarize these default U-values.

Appendix H also includes Form 3Rs for assemblies that meet the default U-values with a combination of batt and rigid insulation, rather than only batt insulation (including metal frame assemblies). In addition, it contains R-values and other information on a variety of masonry wall assemblies.

To determine if an assembly meets the minimum insulation levels required by the mandatory measures or the prescriptive packages, obtain the U-value of the proposed assembly or complete a Form 3R for a wood frame assembly and see if the proposed U-value is less than or equal to the standard U-value for that assembly type and insulation level as listed in Tables G-12 through G-15. Compare the proposed U-value to the U-values listed for framing spacing of 16" o.c. for walls and 24".o.c. for roofs/ ceilings.

HOW TO COMPLETE FORM 3R

The U-value and R-value of a proposed construction assembly is calculated on Form 3R (a blank copy of Form 3R is contained in Appendix A). The form is used in documenting compliance and design load calculations (see *Compliance Documentation*).

Form 3R uses the parallel path method for determining the overall U-value of wood framed assemblies. This entails calculating the total R-value of the assembly through both the cavity between framing and through the frame material itself, and then calculating the area-weighted U-value for the assembly overall.

NOTE:

U-values for metal frame walls are not calculated using the parallel path method, but instead are determined using a method based on the zonal method in the 1993 *ASHRAE Handbook of Fundamentals* or manufacturers' data (see Appendix H or Chapter 2, Part 2.3 for more information). Pre-calculated default U-values for metal frame walls may also be used in compliance calculations. These are listed in Table G-18.

Figures G-7 and G-8 are examples of completed Form 3Rs. The general steps for completing a Form 3R are listed below:

Parallel Path Method

1. List the Assembly *Name* (e.g., "Flat Ceiling"), Assembly *Type* (e.g., Wall, Roof, Floor), Framing *Material* (e.g., Wood or Metal), Framing *Size* (e.g., 2x6), Framing *Spacing* (e.g., 16" o.c.) and Framing % (from Table G-6). If a prescriptive package is being used to show compliance and the assembly is a wall, list the wall weight per square foot.

2. Identify the appropriate R-values for Outside and Inside Air Films according to the standard values listed in Table G-7 for winter conditions. An inside film may be assumed on both sides of the assembly when the heated space is adjacent to an enclosed, unconditioned space. List these numbers in both the Cavity R-Value and Frame R-Value columns of Form 3R.

IMPORTANT NOTE:

***Do not round any of the values used on Form 3R** except for the final resulting Total R-Value shown in Step 7 below.*

Air film R-values may also be taken from ASHRAE Table 1, Surface Conductances for Air, in Appendix B. The STILL AIR value is the inside film and the MOVING AIR value is the outside film.

3. Starting with the outside material, identify the type and thickness of each construction assembly component, including air spaces (see *Attic and Crawlspace R-values* below), and list them on successive lines under "List of Construction Components."

Table G-6: Framing Percentages

Assembly Type	Framing Spacing	Framing Percentage
WALLS	16"o.c.	15 %
	24"o.c.	12 %
	48"o.c.	9 %
FLOORS	16"o.c.	10 %
	24"o.c.	7 %
ROOFS	16"o.c.	10 %
	24"o.c.	7 %
	48"o.c.	4 %

4. For each component, find the associated Resistance (R) from ASHRAE Table 2, Thermal Resistance of Plane Air Spaces, and Table 4, Thermal Properties of Typical Building and Insulating Materials - Design Values, found in Appendix B. ***When a range of ASHRAE values is listed for a material, use the most conservative assumption for compliance with the standards*** (i.e., the lowest R-value or the highest U-value). Typical R-values for unframed air spaces are listed in Table G-7. Manufacturers' rated R-values may be used in lieu of ASHRAE values. For insulation or air spaces penetrated by wood framing, both the insulation or air space and the framing itself should be listed.

Table G-7: Standard R-Values for Air Films and Air Spaces[1]

	Wall	Roof Flat[3]	Roof 45º angle[4]	Floor
AIR FILMS[2]				
Inside	0.68	0.61	0.62	0.92
Outside	0.17	0.17	0.17	0.17
AIR SPACES[5]				
0.5 inch	0.77	0.73	0.76	0.77
0.75 inch	0.84	0.75	0.81	0.85
1.5 inch	0.87	0.77	0.80	0.94
2.0 inch	0.875	0.778	0.805	0.955
2.5 inch	0.86	0.785	0.81	0.97
3.5 inch[6]	0.85	0.80	0.82	1.00

[1] Values from *ASHRAE Handbook of Fundamentals*, 1993 edition, Chapter 24, Tables 1, 2 and 3 reprinted in Appendix B of this manual.

[2] Assumes a non-reflective surface emittance of 0.90 and winter heat flow direction.

[3] Use the "Flat" roof R-values for roof angles between horizontal and 22 degrees.

[4] Use the "45 degree" roof R-values for roof angles between 23 and 60 degrees.

[5] Assumes mean temperature of 90ºF, temperature difference of 10ºF, surface emittance of 0.82 and winter heat flow direction.

[6] Use these R-values for air spaces greater than or equal to 3.5 inches, such as attics.

PROPOSED CONSTRUCTION ASSEMBLY: RESIDENTIAL — FORM 3R

Smith Residence — Project Title
July 1, 1999 — Date
123 main Street, Sacramento, CA — Project Address
Mary Jones — Documentation Author
(916) 555-0000 — Telephone
R-30 Roof — Assembly Name

Building Permit #
Plan Check / Date
Field Check / Date
Enforcement Agency Use Only

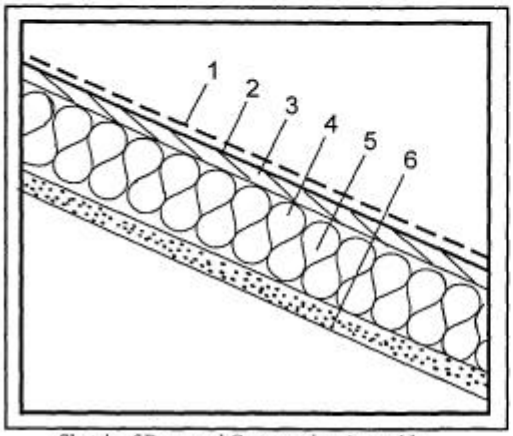

Sketch of Proposed Construction Assembly

Assembly Type: (check one) ___ Floor; ___ Wall; ✓ Ceiling/Roof

Framing Material: Wood

Framing Size: 2 × 10

Framing Spacing: 16 inches on center (" o.c.)

Framing Percentage (Fr.%): (check one)

Wall: ___ 15% (16" o.c.); ___ 12% (24" o.c.); ___ 9% (48" o.c.)

Floor/Ceiling: ✓ 10% (16" o.c.); ___ 7% (24" o.c.); ___ 4% (48" o.c.)

Wall Weight / sf: N/A (Packages only)

List of Construction Components	R-Value Cavity (R_c)	R-Value Frame (R_f)
Outside Surface Air Film	0.170	0.170
1. Asphalt shingle roofing	0.440	0.440
2. Building paper (felt)	0.060	0.060
3. 0.50 in plywood	0.620	0.620
4. 2x10 in fir framing	—	9.158
5. R-30c fiberglass insulation (8.5" thkns)	30.000	—
6. 0.50 in gypsum or plasterboard	0.450	0.450
7.		
8.		
Inside Surface Air Film	0.610	0.610
Total Unadjusted R-Values:	32.350 (R_c)	11.508 (R_f)

Framing Adjustment Calculation:

$$[(\frac{1}{32.350}) \times (\frac{1-10/100}{1-(Fr.\% \div 100)})] + [(\frac{1}{11.508}) \times (\frac{10/100}{Fr.\% \div 100})] = 0.036 \text{ Total U-Value}$$

$$\frac{1}{0.036} = 27.778 \text{ Total R-Value}$$

July 1, 1999

Figure G-7: Form 3R Roof/Ceiling Assembly

PROPOSED CONSTRUCTION ASSEMBLY: RESIDENTIAL — FORM 3R

Smith Residence — Project Title
July 1, 1999 — Date
123 Main Street, Sacramento, CA — Project Address
Mary Jones (916) 555-0000 — Documentation Author / Telephone
R-19 Raised Floor — Assembly Name

Building Permit #
Plan Check / Date
Field Check / Date
Enforcement Agency Use Only

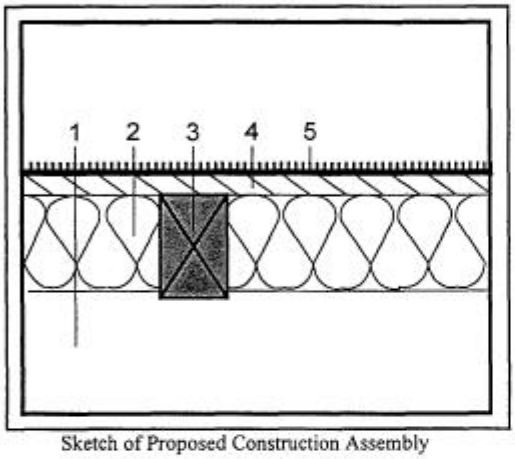

Sketch of Proposed Construction Assembly

Assembly Type: (check one) ✓ Floor; ___ Wall; ___ Ceiling/Roof

Framing Material: Wood
Framing Size: 2 × 8
Framing Spacing: 16 inches on center (" o.c.)
Framing Percentage (Fr.%): (check one)
Wall: ___ 15% (16" o.c.); ___ 12% (24" o.c.); ___ 9% (48" o.c.)
Floor/Ceiling: ✓ 10% (16" o.c.); ___ 7% (24" o.c.); ___ 4% (48" o.c.)

Wall Weight / sf: NA (Packages only)

List of Construction Components

		R-Value Cavity (R_c)	R-Value Frame (R_f)
	Outside Surface Air Film	0.170	0.170
1.	Effective R-value of vented crawlspace	6.000	6.000
2.	R-19 fiberglass insulation	19.000	—
3.	7.25 in fir framing	—	7.178
4.	0.625 in plywood	0.770	0.770
5.	Carpet & Pad	2.080	2.080
6.			
7.			
8.			
	Inside Surface Air Film	0.920	0.920
	Total Unadjusted R-Values:	28.940 (R_c)	17.118 (R_f)

Framing Adjustment Calculation:

$$\left[\left(\frac{1}{1 \div R_c = 14.535}\right) \times \left(\frac{1 - 10/100}{1 - (Fr.\% \div 100)}\right)\right] + \left[\left(\frac{1}{1 \div R_f = 17.118}\right) \times \left(\frac{10/100}{Fr.\% \div 100}\right)\right] = 0.037 \text{ Total U-Value}$$

$$\frac{1}{1 \div \text{Total U-Value} = 0.037} = 27.027 \text{ Total R-Value}$$

July 1, 1999

Figure G-8: Form 3R Floor Assembly

NOTE:

Any carpet and pad combination must be assigned an R-value of R-2.0. Do not use ASHRAE R-values for carpet and pad.

5. List the insulation R-value for batt insulation in the Cavity (R_C) column and the R-value of the wood framing in the Frame (R_f) column. The R-values of all other components (not penetrated by the framing) should be listed in both columns.

6. Add up the R-values in the Cavity (R_C) column and in the Frame (R_f) column. Enter these as the "Total Unadjusted R-Values."

7. Calculate the following values and enter the results in the “Framing Adjustment Calculation”:

    - $1/R_C$
    - 1 - (Framing %/100)
    - $1/R_f$
    - Framing %/100

Complete the arithmetic to obtain the "Total U-Value". Round the Total U-Value to three significant digits (i.e., 0.06554 rounds to 0.066). Then divide 1 by the Total U-Value to obtain the Total R-Value. Round the Total R-Value to two significant digits.

Attic and Crawl Space R-Values

Attic air spaces greater than or equal to 3.5 inches shall be treated as standard 3.5 inch air spaces in a roof assembly. The appropriate R-values for flat and 45 degree roofs are listed in Table G-7. The "Flat" R-value should be used for roof angles between horizontal and 22 degrees, while the "45 degree" R-value applies to roof angles between 23 and 60 degrees. See also Figure G-7 for an example of an attic air space.

Vented crawl spaces shall be assigned a fixed R-value of R-6. See Figure G-8 for an example of a vented crawl space.

Simplified Masonry U-Value Calculation in Appendix H

Appendix H contains an alternative, simplified approach to determine R-values, U-values and heat capacities for masonry and concrete walls. See Appendix H for details and instructions.

See also *Insulation R-Value* and *U-Value*.

SEER (Seasonal Energy Efficiency Ratio)

The total cooling of a central air conditioner or heat pump in Btu during 12 months divided by the total electric energy input in watt-hours during the same period.

The Seasonal Energy Efficiency Ratio of all new central air conditioners and central air source heat pumps with output less than 65,000 Btuh manufactured on or after January 1, 1993 shall be certified not to be less than the values listed as follows:

Appliance	*SEER*
Central Air Conditioners	
Split System	10.0
Single Package	9.7
Central Air Source Heat Pumps	
Split System	10.0
Single Package	9.7

See also *Heating, Ventilating and Air Conditioning* and *EER*.

Service Water Heating

"Service water heating is heating of water for sanitary purposes for human occupancy, other than for comfort heating." [*EES*, Section 101]

Shading

The effectiveness of a fenestration product plus shade assembly in stopping heat gain from solar radiation is expressed as the Solar Heat Gain Coefficient (SHGC). SHGC values range from 0 to almost 1. The more effective at stopping heat gain, the lower the SHGC value. See also *Solar Heat Gain Coefficient.*

See Tables G-8 G-9, and G-10 for allowed SHGCs.

Shading Coefficient (SC)

See *Shading*, *Solar Heat Gain Coefficient*.

Solar Heat Gain Coefficient (SHGC)

"Solar heat gain coefficient (SHGC) is the ratio of the solar heat gain entering the space through the fenestration area to the incident solar radiation. Solar heat gain includes directly transmitted solar heat and absorbed solar radiation, which is then reradiated, conducted, or convected into the space." [*EES*, Section 101]

Controlling heat gain from solar radiation is an integral element of the standards and therefore must be taken into account for compliance purposes. Within the context of the standards, there are different options for selecting appropriate SHGCs.

Solar Heat Gain Coefficient (SHGC) replaces the Shading Coefficient (SC) used in earlier versions of the standards as a measure of the solar heat gain due to windows and shading devioces.

SHGC Compliance Options - Performance Compliance

- The SHGC for the fenestration is determined based on the default table glass type and framing from Table G-8 or from product literature for NFRC-certified products.

- When glazing is used in combination with interior or exterior shades, the solar heat gain coefficient for the fenestration assembly is based on values from Tables G-9 and G-10.

Internally, approved computer programs must calculate the SHGC of a window with an interior *shade open* and *shade closed*. Generally, glazing is assumed to be unshaded (Shade Open) during the winter period when solar gains can contribute to building energy needs and shaded (Shade Closed) during the summer period when solar gains are undesirable. However, these values are not reported to the user.

NOTE:

Approved computer programs calculate the solar heat gain coefficient automatically, based on the solar heat gain coefficient of the fenestration ($SHGC_{fen}$), the interior shade selected, the exterior shade selected and any overhangs (see Tables G-8 to G-10 or manufacturer's literature). Refer to the User's Manual for each program for specific input requirements.

SHGC Compliance Options - Prescriptive Compliance

- The SHGC is determined based on the default table glass type and framing from Table G-8 or from product literature for labeled products. Interior shading is not credited in the prescriptive approach.

- When glazing is used in combination with an exterior shading device, the solar heat gain coefficient is calculated using Form S. See Chapter 3

Solar Heat Gain Coefficient of Clear Glass with No Shading or Standard Drapes and/or Bug Screens

If no shading device is specified and if no special glazing type is to be installed, the designer must assume in performance compliance calculations that:

- Single pane clear glazing has an $SHGC_{fen}$ of 0.80 with metal framing or 0.74 with vinyl or wood framing.

- Double pane clear glazing has an $SHGC_{fen}$ of 0.70 with metal framing or 0.65 with vinyl or wood framing.

- In the performance approach, the window is modeled with draperies and bugscreens unless different interior and exterior shading attachments are selected from a list of allowed devices. Except for skylights some type of interior and exterior shading device must be modeled. Custom interior or exterior attachments are not allowed to be modeled.

Solar Heat Gain Coefficients from Manufacturer's Literature

Manufacturer's data for a labeled fenestration product may be used directly in compliance calculations, if applicable, or for $SHGC_{fen}$ as part of the overall SHGC calculations on the *Solar Heat Gain Coefficient Worksheet* (Form S) for determining compliance with the prescriptive packages in Chapter 3.

Table G-8: DEFAULT SOLAR HEAT GAIN COEFFICIENT

Frame Type	Product	Glazing	Total Window SHGC Single Pane	Total Window SHGC Double Pane
Metal	Operable	Uncoated	0.80	0.70
Metal	Fixed	Uncoated	0.83	0.73
Metal	Operable	Tinted	0.67	0.59
Metal	Fixed	Tinted	0.68	0.60
Metal, Thermal Break	Operable	Uncoated	0.72	0.63
Metal, Thermal Break	Fixed	Uncoated	0.78	0.69
Metal, Thermal Break	Operable	Tinted	0.60	0.53
Metal, Thermal Break	Fixed	Tinted	0.65	0.57
Non-Metal	Operable	Uncoated	0.74	0.65
Non-Metal	Fixed	Uncoated	0.76	0.67
Non-Metal	Operable	Tinted	0.60	0.53
Non-Metal	Fixed	Tinted	0.63	0.55

SHGC = Solar Heat Gain Coefficient

Table G-9: SHGC's FOR ALLOWED INTERIOR SHADING ATTACHMENTS[1]

Interior Shading Attachment/Device	SHGC Before Jan. 1, 2002	SHGC On or After Jan. 1, 2002
Standard *includes Draperies (all colors & weaves), None (for non-skylights),or Translucent Roller Shades (all colors) Standard* values are also used for any interior shading device not otherwise listed in this table.	0.68	0.68
Blinds *All Colors of Venetian Blinds, Miniblinds, or Vertical Blinds.*	0.47	0.47
OpRollShd Opaque Roller Shades (All Colors)	0.47	0.47
None Only Allowed for Skylights. Also the default value for skylights when no other interior shading is specified.	1.00	1.00

[1] Shading devices between glazing lights for vertical windows or skylights may be modeled as an interior shading device or interior shading attachment of the same type.

Calculating Solar Heat Gain Coefficients Using Form S

If using a prescriptive alternative component package for compliance, use values from Table G-8 or manufactuer's literature for the $SHGC_{fen}$ value for a labeled fenestration product. If an exterior shading device is planned, the SHGC may be calculated using the *Solar Heat Gain Coefficient (SHGC) Worksheet* (Form S). The *Solar Heat Gain Coefficient Worksheet* incorporates the following basic formula for calculating a combined SHGC:

$SHGC_{comb} = [(0.2875 \times SHGC_{max}) + 0.75] \times SHGC_{min}$

Where:

$SHGC_{comb}$ = Combined solar heat gain coefficient
$SHGC_{max}$ = Maximum solar heat gain coefficient
$SHGC_{min}$ = Minimum solar heat gain coefficient

The *Solar Heat Gain Coefficient Worksheet* allows the calculation of SHGC for both simple and complex shade combinations.

The following sections explain how to calculate solar heat gain coefficients Form S. The number of each item below corresponds to the appropriate item on Form S.

General Information

Enter either:

1a. For products with NFRC testing and labels, enter the product's labeled SHGC as #1a. $SHGC_{fen}$.

OR enter

1b,. The default $SHGC_{fen}$ from Table S-1 (or Table G-8) corresponding to the fenestration characteristics described in entries 1c, 1d, 1e, and 1f. Entries for 1c, 1d, 1e, and 1f are only needed if 1b is entered for $SHGC_{fen}$.

If 1b. is entered then:

1c. Describe the Frame Type [metal, metal w/thermal break, or non-metal (non-metal includes both vinyl and wood)].
1d. The Product Type (operable or fixed);
1e. The Glazing Type (tinted or uncoated); Note that tints or coatings that cannot be easily observed by the building official must be classified as "uncoated", that is, tints must be easily visible to the naked eye.
1f. Single or Double pane glazing.

2. For skylights mounted on a roof surface with a pitch less than or equal to 1 in 12 (as defined for the residential standards) enter "Y", other wise enter "N."

   Note: For the purpose of complying with prescriptive packages, skylights mounted on roof surfaces with pitchs greater than 1 in 12 are treated as **vertical windows** facing the direction of the outward normal to the roof for purposes of complying with the residential standards. Hence in climate zone 14, a skylight on a 4 in 12 roof facing east or west is required to have a fenestration SHGC of 0.40 or a combined SHGC of 0.39.

   In a performance compliance, if no interior shades are proposed, select *Standard* or *Draperies* . Note that this requirement does not apply to skylights. For skylights select *Standard* or *None*. The $SHGC_{Interior\ Shade}$ for skylights without interior shades equals 1.0 and is the default value.)

Complete steps 3 through 4 for any exterior shades.

Exterior Shade

Complete steps 1 and 2 for the fenestration product. Using these values, continue with steps 3 and 4.

3. Describe the exterior shading device in the space provided (e.g., roll down awning). List $SHGC_{Exterior\ Shade}$, the SHGC of the exterior shade with 1/8" clear single pane glass and metal framing, from Table S-2 or G-8. If a single window or skylight has multiple exterior shades (i.e. shade screens and

awnings) use the one shading device with the lower SHGC.

If no exterior shade is proposed, assume standard bug screens with a SHGC of 0.76 (or an SHGC of 1.00 for horizontal glazing). This applies to the full area of fixed fenestration products as well as operable.

4. Calculate $SHGC_{Shade\ Open}$ using values from Items 3 and either 1a or 1b. The result is the combined SHGC of the fenestration product and exterior device with the interior *shade open*.

Table G-10: Solar Heat Gain Coefficients Used for Form S and Computer Performance Methods [1,2]

Exterior Shading Attachment/Device[3]	SHGC[4]
1) Standard Bug Screens	0.76
2) Exterior Sunscreens with weave 53*16/inch	0.30
3) Louvered Sunscreens w/louvers as wide as openings	0.27
4) Low Sun Angle (LSA) Louvered Sunscreens	0.13
5) Roll-down Awning	0.13
6) Roll Down Blinds or Slats	0.13
7) None (for skylights only)	1.00

1. These values may be used on line 11 of the Solar Heat Gain Coefficient Worksheet (form S) to calculate exterior shading with other glazing types and combined interior and exterior shading with glazing.

2. Exterior operable awnings (canvas, plastic or metal), except those that roll vertically down and cover the entire window, should be treated as overhangs for purposes of compliance with the Standards.

3. Standard bug screens must be assumed for all fenestration unless replaced by other exterior shade screens. The solar heat gain coefficient listed for bug screens is an area-weighted value that assumes that the screens are only on operable windows. The solar heat gain coefficient of any other exterior shade screens applied only to some window areas must be area-weighted with the solar heat gain coefficient of standard bug screens for all other glazing (see Weighted Averaging in the Glossary). Different shading conditions may also be modeled explicitly in the computer performance method.
4. Reference glass for determining solar heat gain coefficients is 1/8 inch double strength (DSS) glass.

$SHGC_{fen}$ (from either 1a. or 1b.) and the types of interior and exterior shading attachments are used directly on the Certificate of Compliance (CF-1R) for the prescriptive packages.

Overhangs

Overhang shading is modeled explicitly in the computer performance method.

Overhang requirements for the prescriptive packages are specified in the standards. Other than as specified in the standards, overhang shading may not be included in the SHGCs used to meet the minimum prescriptive requirements.

Shading by Adjacent Structures or Terrain or other Permanent Obstructions

Fenestration may be considered *substantially shaded* if a permanent obstruction is substantially wider than the fenestration being considered and if the obstruction is tall enough to shade the top of the fenestration at a profile angle of 45 degrees. If fenestration is substantially shaded in the summer and winter

by a permanent obstruction, the glazing may be treated as having a permanently fixed exterior SHGC of 0.20 for compliance calculations.

It is up to the local enforcement agency to determine whether the shading elements are sufficiently permanent and meet the criteria.

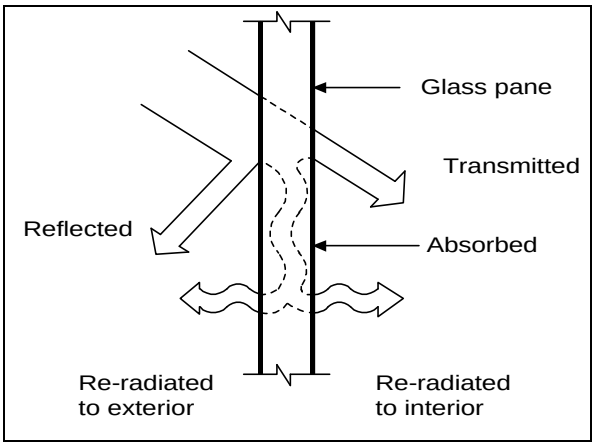

Figure G-9: Solar Radiation through Glass

Side Fins

Vertical shading elements mounted on either side of a glazed opening that can protect the glazing from lateral low angle sun penetration.

Single Family Attached

A multi-family building whose dwelling units share common walls but do not share any common floors/ceilings is considered Single Family Attached.

See *Building Type*.

Single Family Building

A single dwelling unit of occupancy type R, as defined in the *UBC*, which stands separate and unattached from other dwelling units, but may have an attached garage. A dwelling unit that is separated only by a property line and double wall construction (with a space between the walls) from another dwelling unit and that shares no common floor/ceiling is also treated as single family.

Skylight

A skylight is "glazing having a slope less than 60 degrees from the horizontal with conditioned space below, except for purposes of complying with Section 151(f) [prescriptive packages], where a skylight is glazing having a slope not exceeding 4.76 degrees (1:12) from the horizontal." [EES, Section 101]

See also *Fenestration Product, Glazing*.

Slab-on-Grade

A slab-on-grade is an exterior concrete floor in direct contact with the earth below the building.

See Chapters 3 and 5, and the *Glossary* definitions of *Conditioned Footprint Area* and *Exterior Floor*.

Solar Heat Gain Coefficient (SHGC)

The solar heat gain coefficient is a measure of the effectiveness of a fenestration product or window covering to stop solar gains through the window. Solar heat gain coefficient (SHGC) is the "ratio of the solar heat gain entering the space through the fenestration area to the incident solar radiation. Solar heat gain includes directly transmitted solar heat and absorbed solar radiation, which is then reradiated, conducted, or convected into the space." [EES, Section 101]

See *Shading* for information on compliance with the standards.

Source Energy

Source energy is the original energy consumed to produce usable end-use energy for space conditioning, lighting, appliances and other uses in a building. The standards are based on the concept of an annual energy budget that measures source energy used per year in a building.

Source energy accounts for all of the energy used in delivering energy to the building site including power generation, transmission losses and distribution. Electricity (kWh) is converted to source energy (Btu) at the rate of 10,239 Btu per kilowatt-hour (3 times 3,413). This assumes that only a third of the energy used to produce electricity is actually delivered to a building in a usable form.

By contrast, fossil fuels such as natural gas, propane and oil may be used directly at the

building site, so that source energy equals end-use energy. Natural gas used directly at the building site is converted to source energy at the rate of 100,000 Btu per therm.

Table G-11: Source Energy Conversion Rates[1]

Energy Source	Btu per unit consumption
Electricity	10,239 Btu/kilowatt-hour
Natural Gas	100,000 Btu/therm
Fuel Oil	138,400 Btu/gallon
LPG (Propane)	91,080 Btu/gallon

[1] Reprinted from EES, Section 102, Table 1-B.

See *Energy Budget* and *Heating, Ventilating and Air Conditioning (Electric Resistance Heating)*.

South-Facing

"South-facing is oriented to within 45 degrees of true south, including 45°0'0" west of south (SW), but excluding 45°0'0" east of south (SE)." [*EES*, Section 101]

This definition applies only to the prescriptive packages and master plans analyzed according to the multiple orientation alternative as explained in Chapter 8, Part 8.4. In the computer methods the actual building orientation must be used, except in the case of master plans as stated above.

The designation “South-Facing” is also used in production buildings using orientation restrictions (e.g., Shaded Areas: East-Facing). See Chapter 8, Part 8.4.

Space Conditioning System

A space conditioning system is “a system that provides . . . heating, ventilating, or cooling within or associated with conditioned spaces in a building." [*EES*, Section 101] The system may operate alone or in conjunction with other systems.

See *Heating, Ventilating, and Air Conditioning*.

Stairs

See *Conditioned Floor Area*.

Standard Design

A new building or addition alone (see Chapter 7, Part 7.2) complies with the standards if the predicted source energy use of the proposed design is the same or less than the annual budget for space conditioning and water heating of the standard design. For both slab-on-grade and raised floor buildings, the standard design is based on the conservation levels and features in prescriptive Package D.

See *Source Energy, Energy Budget* and *Proposed Design*, and Chapter 4, Part 4.2.

Standards

The California *Energy Efficiency Standards* as set forth in the *California Code of Regulations*, Title 24, Part 6.

Standby Loss

Standby loss is the ratio of heat lost per hour to the heat content of the stored water above room temperature. It is one of the measures of efficiency of water heaters required for water heating energy calculations for some types of water heaters (see Chapter 5). Standby loss is expressed as a percentage. [*AER*, Section 1602]

Subordinate Occupancy

In mixed occupancy buildings, any occupancy type that is not the dominant occupancy. See also *Dominant Occupancy, Mixed Occupancy,* and Chapter 8.

System

A system is “a combination of equipment, controls, accessories, interconnecting means, or terminal elements, by which energy is transformed to perform a specific function, such as space conditioning, service water heating, or lighting." [*EES*, Section 101]

Task Oriented Lighting

Task lighting is “lighting that is designed specifically to illuminate a task location, and that is generally confined to the task location." [*EES*, Section 101]

See also *Lighting*, *General Lighting*, Chapter 2, Part 2.4, Figures 2-8 and 2-9.

Thermal Mass

"Thermal mass is solid or liquid material used to store heat for later heating use or for reducing cooling requirements." [*EES*, Section 101]

Commonly used thermal mass materials include concrete, masonry, brick, tile, rock and water. These materials are readily available and have excellent thermal properties. The more mass a building has, the slower its interior temperatures will change.

Thermal mass can conserve energy in a residential building in two basic ways:

- In the winter, solar radiation entering a building through glass is absorbed directly or indirectly into areas of thermal mass exposed to indoor air. The mass material tends to store its heat during the day and release it into the room air during the evening and night when more heating is required.

Table G-12: Thermal Mass Properties

Material	Conductivity (Btu/hr-ft^2-^{o}F)	Density (lb/ft^3)	Specific Heat (Btu/lb-^{o}F)
Adobe	**0.33**	**120**	**0.20**
Heavy Concrete	**0.98**	**140**	**0.20**
Lightweight Concrete	**0.36**	**85**	**0.20**
Gypsum	**0.09**	**50**	**0.26**
Masonry Veneer	**0.62**	**127**	**0.20**
Masonry Infill	**0.44**	**120**	**0.20**
Concrete Masonry Unit	**0.59**	**105**	**0.20**
Grouted Concrete Masonry Unit	**1.00**	**134**	**0.20**
Stucco	**0.47**	**105**	**0.20**
Tile in Mortar	**0.67**	**120**	**0.20**
Solid Wood (Fir)	**0.07**	**32**	**0.33**

Table G-13: Thermal Mass Coverings and Associated Categories[1]

Category 1: Acceptable as Exposed Mass In Any Location. Floor coverings/surfaces determined to be acceptable on any portion of a slab designated as thermal mass in any location within the conditioned space of a residential building.

Category 2: Acceptable as Exposed Mass Only In Kitchens, Dining Areas that are Extensions to Kitchens, Pantries, Bathrooms, Laundry Rooms, Service Porches and/or Entries. Concrete slabs with Category 2 surfaces must be treated as covered slab in other locations.

Covering/Surface	Category
Brick	1
Concrete, Exposed Aggregate	1
Concrete, Painted and/or Polished	2
Concrete, Stamped	1
Concrete, Unfinished	2
Hardwood Veneer (except when installed on wood sleepers)	1
Resin-based Poured Flooring	2
Stone or Stone Veneer	1
Sheet Vinyl	2
Tile, Asphalt	2
Tile, Ceramic	1
Tile, Terrazzo	1
Tile, Vinyl	2
Tile, Vinyl-Asbestos	2
Other Masonry Materials with Permanent Finishes Similar to Those Specified in Category 1 and Acceptable to the Building Official	1

1. The intent of these guidelines is to prevent taking exposed thermal mass credit for floor materials that are likely to be covered with carpeting at the time of building occupancy.

   Building officials should allow flexibility for building designs that include radiant floor heating systems and/or that incorporate large areas of uncarpeted slabs in conjunction with south facing glazing as an integral component of deliberately designed passive solar structures.

- In the summer months, the mass material can be cooled down at night by natural ventilation. During the daytime, the mass absorbs excess heat and helps keep down indoor air temperatures. If glazing is well shaded to keep out direct sunlight, the mass can substantially reduce or eliminate completely the need for mechanical cooling.

The standards specify thermal mass materials as including, but not limited to:

- Hard-surfaced slab floors
- Masonry walls and fireplaces
- Gypsum board walls and ceilings in excess of 1/2 inch thickness

The physical properties of thermal mass materials are listed in Table G-12.

Table G-13 lists recommendations on when it is appropriate to take credit for a particular mass material. The intent of these guidelines is to prevent taking thermal mass credit for floor materials that are likely to be covered with carpeting at the time of building occupancy.

Building officials should allow flexibility for building designs that include radiant floor heating systems and/or that incorporate large areas of uncarpeted slabs in conjunction with south facing glazing as an integral component of deliberately designed passive solar structures.

Title 24

The *State Building Code*, published in Title 24 of the *California Code of Regulations*. The *Energy Efficiency Standards* are contained in Part 6. Part 1 includes the administrative requirements of the standards.

Table G-14: Standard U-Values of Wood Frame Roofs and Ceilings[1]

Ceiling Insul.	Framing Spacing	Reference Name[2]	U-Value
R-0[3]	16" o.c.	R.0.2X6.16	0.298
R-0[3]	24" o.c.	R.0.2X4.24[4]	0.306
R-11[3]	16" o.c.	R.11.2X6.16	0.077
R-11[3]	24" o.c.	R.11.2X4.24	0.077
R-13[3]	16" o.c.	R.13.2X6.16	0.069
R-13[3]	24" o.c.	R.13.2X4.24	0.069
R-19	16" o.c.	R.19.2X8.16	0.051
R-19	24" o.c.	R.19.2X4.24	0.047
R-22	16" o.c.	R.22.2X10.16	0.045
R-22	24" o.c.	R.22.2X4.24	0.041
R-30	16" o.c.	R.30.2X10.16	0.036
R-30	16" o.c.	R.30.2X12.16	0.034
R-30	24" o.c.	R.30.2X4.24	0.031
R-38	16" o.c.	R.38.2X12.16	0.030
R-38	16" o.c.	R.38.2X14.16	0.028
R-38	24" o.c.	R.38.2X4.24	0.024
R-49	16" o.c.	R.49.2X4.16	0.019
R-49	24" o.c.	R.49.2X4.24	0.019

1. Based on ASHRAE Parallel Heat Flow Calculation, 1993 *ASHRAE Handbook of Fundamentals*.
2. The names given to the standard assemblies used to calculate these U-values in Appendix H.
3. Does not meet the minimum level required as a mandatory measure (see Chapter 2, Part 2.2).
4. Roof/ceiling assemblies whose reference names list 2X4 framing include an attic space.

U-value

The U-value is the "overall coefficient of thermal transmittance of a construction assembly, in Btu/(hr x ft^2 x ºF), including air film resistances at both surfaces." [*EES*, Section 101]

The standard U-values listed in Tables G-12 through G-15 must be used for wood frame assemblies unless a Form 3R is completed as explained under R-value. Appendix H contains completed Form 3Rs for each standard

assembly. If insulation level and framing material are known, but no other information is available on the assembly, use the worst case (highest) standard U-value for the insulation level. For wall and roof/ceiling assemblies, this corresponds to framing at 16 inch o.c.

Table G-15: Standard U-Values of Wood Frame Walls[1]

Insul.	Wall Spacing	Framing Name[2]	Reference U-Value
R-0[3]	16" o.c.	W.0.2X4.16	0.385
R-0[3]	24" o.c.	W.0.2X4.24	0.393
R-7[3]	16" o.c.	W.7.2X4.16	0.130
R-7[3]	24" o.c.	W.7.2X4.24	0.127
R-11[3]	16" o.c.	W.11.2X4.16	0.098
R-11[3]	24" o.c.	W.11.2X4.24	0.094
R-13	16" o.c.	W.13.2X4.16	0.088
R-13	24" o.c.	W.13.2X4.24	0.085
R-15	16" o.c.	W.15.2X4.16	0.081
R-15	24" o.c.	W.15.2X4.24	0.077
R-19	16" o.c.	W.19.2X6.16	0.065
R-19	24" o.c.	W.19.2X6.24	0.063
R-21	16" o.c.	W.21.2X6.16	0.059
R-21	24" o.c.	W.21.2X6.24	0.056
R-25	16" o.c.	W.25.2X6.16	0.046
R-29	16" o.c.	W.29.2X4.16	0.035
Solid core wood door (no insulation)		D.O.SCW	0.330

1. Based on ASHRAE Parallel Heat Flow Calculation, 1993 *ASHRAE Handbook of Fundamentals*.
2. The names given to the standard assemblies used to calculate these U-values in Appendix H.
3. Does not meet the minimum level required as a mandatory measure (see Chapter 2, Part 2.2).

NOTE:
Table G-18 lists standard U-values for steel frame walls. These values must be used in compliance calculation unless the U-value of the proposed steel frame wall assembly is determined using the methods indicated in Appendix I.

To determine if an assembly meets the minimum insulation levels required by the mandatory measures or the prescriptive packages, complete a Form 3R (for wood frame assemblies) and see if the proposed U-value is less than or equal to the standard U-value for that assembly type and insulation level as listed in Tables G-14 through G-17. Match the standard U-values listed for framing spacing of 16" o.c. for walls and roofs/ceilings.

Table G-16: Standard U-Values of Wood Frame Raised Floors[1]

Floor Insul.	Condition	Reference Name[2]	U-Value
R-0[3]	No C.S.4	FXO.2X6.16	0.241
R-0[3]	With C.S.[4]	FC0.2X6.16	0.097
R-11[3]	No C.S.	FX11.2X6.16	0.071
R-11[3]	With C.S.	FC11.2X6.16	0.050
R-13	No C.S.	FX13.2X6.16	0.064
R-13	With C.S.	FC13.2X6.16	0.046
R-19	No C.S.	FX19.2X8.16	0.049
R-19	With C.S.	FC19.2X8.16	0.037
R-21	No C.S.	FX21.2X8.16	0.045
R-21	With C.S.	FC21.2X8.16	0.035
R-30	No C.S.	FX30.2X10.16	0.034
R-30	With C.S.	FC30.2X10.16	0.028

1. Based on ASHRAE Parallel Heat Flow Calculation, 1993 *ASHRAE Handbook of Fundamentals*.
2. The names given to the standard assemblies used to calculate these U-values in Appendix H.
3. Does not meet the minimum level required as a mandatory measure (see Chapter 2, Part 2.2).
4. No C.S. = No Crawl Space, With C.S. = With Crawl Space

Fenestration U-values measure the thermal transmittance of the entire fenestration product, including the glazing, framing and any dividers. Default fenestration U-values are listed in Tables G-2. See also *Fenestration Product, Insulation R-Value* and *R-Value*.

Table G-17: Standard U-Values of Wood Foam Panel Roofs/Ceilings and Walls[1]

Roof/ Ceiling Insul.	Framing Spacing	Reference Name[2]	U-Value
R-14[3]	48" o.c.	RP.14.2X4.48	0.058
R-22	48" o.c.	RP.22.2X6.48	0.041
R-28	48" o.c.	RP.28.2X8.48	0.033
R-35	48" o.c.	RP.35.2X10.48	0.027

Wall Insul.	Framing Spacing	Reference Name	U-Value
R-14	48" o.c.	WP.14.2X4.48	0.062
R-22	48" o.c.	WP.22.2X6.48	0.044

1. Based on ASHRAE Parallel Heat Flow Calculation, 1993 *ASHRAE Handbook of Fundamentals*.
2. The names given to the standard assemblies used to calculate these U-values in Appendix H.
3. Does not meet the minimum level required as a mandatory measure (see Chapter 2, Part 2.2).

Unconditioned Space

"Unconditioned space is enclosed space within a building that is not conditioned space. . ." [EES, Section 101]

A space is unconditioned if:

- It is not provided with space conditioning;
- It can be isolated from conditioned space by closeable doors; and
- It is not indirectly conditioned.

Common unconditioned spaces include garages, attics, crawl spaces, mechanical closets and sunspaces. Refer to Chapter 5, Part 5.4K for further information concerning modeling unconditioned spaces using approved computer methods.

Table G-18: U-Values of Steel Frame Walls[1]

Cavity Insul.	Sheath. Insul.	Framing Type	Framing Spacing	Reference Name[2]	U-Value[3]
R-11[3]	R-5.25	2x4	16" o.c.	W.11.S2X4.16	0.096
R-11[3]	R-5.25	2x4	24" o.c.	W.11.S2X4.24	0.090
R-13[3]	R-7.0	2x4	16" o.c.	W.13.S2X4.16	0.081
R-13[3]	R-5.25	2x4	24" o.c.	W.13.S2X4.24	0.087
R-15[3]	R-7.0	2x4	16" o.c.	W.15.S2X4.16	0.080
R-15[3]	R-7.0	2x4	24" o.c.	W.15.S2X4.24	0.074
R-19[3]	R-8.75	2x6	16" o.c.	W.19.S2X6.16	0.064
R-19[3]	R-8.75	2x6	24" o.c.	W.19.S2X6.24	0.060
R-21[3]	R-10.5	2x6	16" o.c.	W.21.S2X6.16	0.057
R-21[3]	R-10.5	2x6	24" o.c.	W.21.S2X6.24	0.053

1. Based on ASHRAE Zone Method Calculation, 1993 *ASHRAE Handbook of Fundamentals*.
2. The names given to the standard assemblies used to calculate these U-values in Appendix H.
3. Does not meet the minimum level required as a mandatory measure without sheathing insulation (see Chapter 2, Part 2.2).

Unit Interior Mass Capacity (UIMC)

Unit Interior Mass Capacity (UIMC) is the "amount of effective heat capacity per unit of thermal mass, taking into account the type of mass material, thickness, specific heat, density and surface area." [*EES*, Section 101]

See *Thermal Mass*.

Vapor Barrier

A vapor barrier is "a material with a permeance of one perm or less which provides resistance to the transmission of water vapor." [*EES*, Section 101] Vapor barriers are mandatory in Climate Zones 14 and 16 only.

A vapor barrier is a special covering over framing and insulation that provides extra protection to the insulation from moisture condensation that could destroy it. Vapor barriers are installed on walls only, unless the building has an unvented attic in which case a vapor barrier would also be installed on the ceiling.

A perm is defined as equal to 1 grain of water vapor transmitted per 1 square foot per hour per inch of mercury pressure difference.

See Chapter 2, Part 2.3 for installation information and material specifications. See also *Infiltration Controls* and Chapter 2, Part 2.2.

Ventilation Air

"Ventilation air is that portion of supply air which comes from outside plus any recircuated air that has been treated to maintain the desired quality of air within a designated space." *[EES* (1988), Section 101] Also see Chapter 4 for compliance using mechanical ventilation.

Weatherstripping

Specially designed strips, seals and gaskets attached to doors and windows to prevent infiltration and exfiltration through cracks around the openings. Weatherstripping is one of the mandatory requirements for all new residential construction. See *Infiltration, Exfiltration*, also Chapter 2, Part 2.2.

Weighted Averaging

Whenever two or more types of a building feature, material or construction assembly occur in a building, a weighted average of the different types must be calculated.

Weighted averaging is simply a mathematical technique for combining different amounts of various components into a single number. Weighted averaging is frequently done when there is more than one level of floor, wall, or ceiling insulation in a building, or more than one type of shading device on windows.

Area-weighted R-values are never used; only area weighted U-values.

The formula for weighted averaging (WA) is:

$$WA = \frac{[(\text{Type 1 Area} \times \text{Type 1 Value}) + (\text{Type 2 Area} \times \text{Type 2 Value}) + ..]}{\text{Total Area}}$$

"Area" can be replaced throughout the formula by "Length" or any other unit of measure used for the value being averaged. "Value" can be replaced throughout the formula by "U-value," "Solar Heat Gain Coefficient," "SEER" or any other value which varies throughout a residence and is appropriate to weight average.

NOTE:

It is incorrect to area-weight different R-values. Only U-values can be area-weighted as explained in the *Glossary* discussion of *R-Value*.

West-Facing

"West-facing is oriented to within 45 degrees of true west, including 45°0'0" due north of west (NW) but excluding 45°0'0" south of west (SW)." [*EES*, Section 101]

This definition applies only to the prescriptive packages, and master plans analyzed according to the multiple orientation alternative as explained in Chapter 8, Part 8.4. In the computer methods the actual building orientation must be used, except in the case of master plans as stated above.

The designation “West-Facing” is also used in production buildings using orientation restrictions (e.g., Shaded Areas: West-Facing). See Chapter 8, Part 8.4.

Wood Heater

See Chapter 8, Part 8.6.

Zonal Control

Zonal control refers to the practice of dividing a residence into separately controlled HVAC zones. This may be done by installing multiple HVAC systems that condition a specific part of the building, or by installing one HVAC system with a specially designed distribution system that permits zonal control.

The Energy Commission has approved an exceptional method for analyzing the energy impact of zonally controlled space heating and cooling systems. See Chapter 8, Part 8.8 for a complete explanation of all the criteria.

See also *Zone*.

Zone, Space Conditioning

A space conditioning zone is “a space or group of spaces within a building with sufficiently similar comfort conditioning requirements so that comfort conditions, as specified in ... 150(h) ... can be maintained throughout the zone by a single controlling device.” [EES, Section 101]

G.4 Reprinted Glossary Tables

All tables are reprinted in this section for easy reference.

Table G-1 - Non-Ducted, Non-Central Gas-Fired Heating Equipment

Gas Fired Wall Furnaces, Floor Furnaces and Room Heaters			*AFUE*
Wall	fan type	up to 42,000 Btu/hour	73%
		over 42,000 Btu/hour	74%
	gravity type	up to 10,000 Btu/hour	59%
		over 10,000 Btu/hour up to 12,000 Btu/hour	60%
		over 12,000 Btu/hour up to 15,000 Btu/hour	61%
		over 15,000 Btu/hour up to 19,000 Btu/hour	62%
		over 19,000 Btu/hour up to 27,000 Btu/hour	63%
		over 27,000 Btu/hour up to 46,000 Btu/hour	64%
		over 46,000 Btu/hour	65%
Floor		up to 37,000 Btu/hour	56%
		over 37,000 Btu/hour	57%
Room		up to 18,000 Btu/hour	57%
		over 18,000 Btu/hour up to 20,000 Btu/hour	58%
		over 20,000 Btu/hour up to 27,000 Btu/hour	63%
		over 27,000 Btu/hour up to 46,000 Btu/hour	64%
		over 46,000 Btu/hour	65%

Table G-2: Typical Compliance Forms Needed for Each Compliance Path

Form	Prescriptive Package	Computer Method
CF-1R	Req	Req
MF-1R	Req	Req
C-2R	NA	Req
WS-1R	If App.	NA
WS-2R	If App.	NA
Form 3R	If App.	If App.
Water Heating[3]	If App.	NA
Form S	If App.	If App.
Load Calc.[4]	If App.	If App.
IC-1	Req	Req
CF-4R	NA	If App.
CF-6R	Req	Req

KEY: If App. = If Applicable, Req = Required information, NA = Not Applicable

3 Required for all non-standard water heating systems as defined in Chapter 5, except for Prescriptive Package compliance analyses with water heating systems listed in Table 3-4. Calculations may be on the worksheets which accompany the water heating method (see Chapter 6, Part 6.3). Water heating calculations are automatically included in the approved computer methods so no additional water heating forms are required for those compliance paths.

4 Load calculations must be performed, but need not be submitted unless requested by the local building department.

Table G-3 - Non-Central Space Cooling Equipment

Including Package Terminal Air Conditioners (PTAC); Package Terminal Heat Pumps (PTHP); Room Air Conditioners; and Room Air Conditioner Heat Pumps.

Equipment Type	Size Category (Input)	Sub-Category or Rating Condition	Minimum Efficiency	Test Procedure
PTAC (Cooling Mode)	All Capacities	95°F db Outdoor Air	10.0 - (0.16 x Cap/1000)[b] EER	ARI 310/380
		82°F db Outdoor Air	12.2 - (0.20 x Cap/1000)[b] EER	
PTHP (Cooling Mode)	All Capacities	95°F db Outdoor Air	10.0 - (0.16 x Cap/1000)[b] EER	
		82°F db Outdoor Air	12.2 - (0.20 x Cap/1000)[b] EER	
PTHP (Heating Mode)	All Capacities		2.9 - (0.026 x Cap/1000)[b] COP	
Room Air Conditioners, with Louvered Sides	< 6,000 Btu/h		8.0 EER	ANSI/AHAM RAC-1
	≥6,000 Btu/h and < 8,000 Btu/h		8.5 EER	
	≥ 8,000 Btu/h and < 14,000 Btu/h		9.0 EER	
	≥14,000 Btu/h and < 20,000 Btu/h		8.8 EER	
	≥20,000 Btu/h		8.2 EER	
Room Air Conditioners, without Louvered Sides	< 6,000 Btu/h		8.0 EER	
	≥6,000 Btu/h and < 20,000 Btu/h		8.5 EER	
	≥20,000 Btu/h		8.2 EER	
Room Air Conditioner Heat Pumps with Louvered Sides	All Capacities		8.5 EER	
Room Air Conditioner Heat Pumps without Louvered Sides	All Capacities		8.0 EER	
Room Air conditioners & Room Heat Pumps Not Covered by Federal Regulations				
Room Air Conditioners & Heat Pumps	200 volts or more		8.2 EER	10 Code of Federal Regs. Section 430.22(f)
Room Air Conditioners	Less than 200 volts		8.7 EER	
Room Heat Pumps			8.3 EER	

[b] Cap means the rated cooling capacity of the product in Btu/h. If the unit's capacity is less than 7000 Btu/h, use 7000 Btu/h in the calculation. If the unit's capacity is greater than 15,000 Btu/h, use 15,000 Btu/h in the calculation.

[c] Replacement units must be factory labeled as follows: "MANUFACTURED FOR REPLACEMENT APPLICATIONS ONLY; NOT TO BE INSTALLED IN NEW CONSTRUCTION PROJECTS." Replacement efficiencies apply only to units with existing sleeves less than 16-in. high and less than 42-in. wide.

Table G-4: DEFAULT FENESTRATION PRODUCT U-VALUES

Frame Type[1]	Product Type	Single Pane U-value	Double Pane U-value[2]
Metal	Operable	1.28	0.87
Metal	Fixed	1.19	0.72
Metal	Greenhouse/Garden window	2.26	1.40
Metal	Doors	1.25	0.85
Metal	Skylight	1.72	0.94
Metal, Thermal Break	Operable		0.71
Metal, Thermal Break	Fixed		0.60
Metal, Thermal Break	Greenhouse/Garden window		1.12
Metal, Thermal Break	Doors		0.64
Metal, Thermal Break	Skylight		0.80
Non-Metal	Operable	0.99	0.60
Non-Metal	Fixed	1.04	0.57
Non-Metal	Doors	0.99	0.55
Non-Metal	Greenhouse/Garden windows	1.94	1.06
Non-Metal	Skylight	1.47	0.68

[1] Metal includes any field-fabricated product with metal cladding. Non-metal framed manufactured fenestration products with metal cladding must add 0.04 to the listed U-value. Non-Metal frame types can include metal fasteners, hardware, and door thresholds. Thermal break product design characteristics are:

a. The material used as the thermal break must have a thermal conductivity of not more than 3.6 Btu-inch/hr/ft^2/°F,
b. The thermal break must produce a gap of not less than 0.210", and
c. All metal members of the fenestration product exposed to interior and exterior air must incorporate a thermal break meeting the criteria in (a) and (b) above.

In addition, the fenestration product must be clearly labeled by the manufacturer that it qualifies as a thermally broken product in accordance with this standard.

[2]For all dual glazed fenestration products, adjust the listed U-values as follows:

a. Subtract 0.05 for spacers of 7/16" or wider.
b. Subtract 0.05 for products certified by the manufacturer as low-E glazing.
c. Add 0.05 for products with dividers between panes if spacer is less than 7/16" wide.
e. Add 0.05 to any product with true divided lite (dividers through the panes).

Table G-5: R-Values for Compressed Mineral Fiber Batt Insulation[1]

Standard Compressed R-Value	Nominal Lumber Size	Actual Cavity Depth	R-Value
13 (3.625")	2x4	3.5"	13
19 (6.25")	2x6	5.5"	17.8
22 (6.75")	2x6	5.5"	20
30 (9.5")[2]	2x10	9.25"	30
38 (12")[2]	2x12	11.25"	37

1. Based on manufacturer's data.
2. Note that batt insulation with these R-values is available in smaller thicknesses. R-30 may be achieved with an 8.25" to 8.5" batt, and R-38 may be achieved with a 10.25" to 10.5" batt. If this thinner insulation is used in the framing sizes listed here, the insulation would retain its full rated R-value because it would not be compressed.

Table G-6: Framing Percentages

Assembly Type	Framing Spacing	Framing Percentage
WALLS	16"o.c.	15 %
	24"o.c.	12 %
	48"o.c.	9 %
FLOORS	16"o.c.	10 %
	24"o.c.	7 %
ROOFS	16"o.c.	10 %
	24"o.c.	7 %
	48"o.c.	4 %

Table G-7: Standard R-Values for Air Films and Air Spaces[1]

	Wall	Roof Flat[3]	Roof 45º angle[4]	Floor
AIR FILMS[2]				
Inside	0.68	0.61	0.62	0.92
Outside	0.17	0.17	0.17	0.17
AIR SPACES[5]				
0.5 inch	0.77	0.73	0.76	0.77
0.75 inch	0.84	0.75	0.81	0.85
1.5 inch	0.87	0.77	0.80	0.94
2.0 inch	0.875	0.778	0.805	0.955
2.5 inch	0.86	0.785	0.81	0.97
3.5 inch[6]	0.85	0.80	0.82	1.00

[1] Values from *ASHRAE Handbook of Fundamentals*, 1993 edition, Chapter 24, Tables 1, 2 and 3 reprinted in Appendix B of this manual.

[2] Assumes a non-reflective surface emittance of 0.90 and winter heat flow direction.

[3] Use the "Flat" roof R-values for roof angles between horizontal and 22 degrees.

[4] Use the "45 degree" roof R-values for roof angles between 23 and 60 degrees.

[5] Assumes mean temperature of 90ºF, temperature difference of 10ºF, surface emittance of 0.82 and winter heat flow direction.

[6] Use these R-values for air spaces greater than or equal to 3.5 inches, such as attics.

Table G-8: DEFAULT SOLAR HEAT GAIN COEFFICIENT

Frame Type	Product	Glazing	Total Window SHGC Single Pane	Total Window SHGC Double Pane
Metal	Operable	Uncoated	0.80	0.70
Metal	Fixed	Uncoated	0.83	0.73
Metal	Operable	Tinted	0.67	0.59
Metal	Fixed	Tinted	0.68	0.60
Metal, Thermal Break	Operable	Uncoated	0.72	0.63
Metal, Thermal Break	Fixed	Uncoated	0.78	0.69
Metal, Thermal Break	Operable	Tinted	0.60	0.53
Metal, Thermal Break	Fixed	Tinted	0.65	0.57
Non-Metal	Operable	Uncoated	0.74	0.65
Non-Metal	Fixed	Uncoated	0.76	0.67
Non-Metal	Operable	Tinted	0.60	0.53
Non-Metal	Fixed	Tinted	0.63	0.55

SHGC = Solar Heat Gain Coefficient

Table G-9: SHGC's FOR ALLOWED INTERIOR SHADING ATTACHMENTS[1]

Interior Shading Attachment/Device	SHGC Before Jan. 1, 2002	SHGC On or After Jan. 1, 2002
Standard *includes Draperies (all colors & weaves), None (for non-skylights),or Translucent Roller Shades (all colors) Standard* values are also used for any interior shading device not otherwise listed in this table.	0.68	0.68
Blinds *All Colors of Venetian Blinds, Miniblinds, or Vertical Blinds.*	0.47	0.47
OpRollShd Opaque Roller Shades (All Colors)	0.47	0.47
None Only Allowed for Skylights. Also the default value for skylights when no other interior shading is specified.	1.00	1.00

[1] Shading devices between glazing lights for vertical windows or skylights may be modeled as an interior shading device or interior shading attachment of the same type.

Table G-10: Solar Heat Gain Coefficients Used for Form S and Computer Performance Methods [1,2]

Exterior Shading Attachment/Device[3]	SHGC[4]
1) Standard Bug Screens	0.76
2) Exterior Sunscreens with weave 53*16/inch	0.30
3) Louvered Sunscreens w/louvers as wide as openings	0.27
4) Low Sun Angle (LSA) Louvered Sunscreens	0.13
5) Roll-down Awning	0.13
6) Roll Down Blinds or Slats	0.13
7) None (for skylights only)	1.00

1. These values may be used on line 11 of the Solar Heat Gain Coefficient Worksheet (form S) to calculate exterior shading with other glazing types and combined interior and exterior shading with glazing.

2. Exterior operable awnings (canvas, plastic or metal), except those that roll vertically down and cover the entire window, should be treated as overhangs for purposes of compliance with the Standards.

3. Standard bug screens must be assumed for all fenestration unless replaced by other exterior shade screens. The solar heat gain coefficient listed for bug screens is an area-weighted value that assumes that the screens are only on operable windows. The solar heat gain coefficient of any other exterior shade screens applied only to some window areas must be area-weighted with the solar heat gain coefficient of standard bug screens for all other glazing (see Weighted Averaging in the Glossary). Different shading conditions may also be modeled explicitly in the computer performance method.

5. Reference glass for determining solar heat gain coefficients is 1/8 inch double strength (DSS) glass.

Table G-11: Source Energy Conversion Rates[1]

Energy Source	Btu per unit consumption
Electricity	10,239 Btu/kilowatt-hour
Natural Gas	100,000 Btu/therm
Fuel Oil	138,400 Btu/gallon
LPG (Propane)	91,080 Btu/gallon

[1] Reprinted from EES, Section 102, Table 1-B.

Table G-12: Thermal Mass Properties

Material	Conductivity (Btu/hr-ft^2-°F)	Density (lb/ft^3)	Specific Heat (Btu/lb-°F)
Adobe	**0.33**	**120**	**0.20**
Heavy Concrete	**0.98**	**140**	**0.20**
Lightweight Concrete	**0.36**	**85**	**0.20**
Gypsum	**0.09**	**50**	**0.26**
Masonry Veneer	**0.62**	**127**	**0.20**
Masonry Infill	**0.44**	**120**	**0.20**
Concrete Masonry Unit	**0.59**	**105**	**0.20**
Grouted Concrete Masonry Unit	**1.00**	**134**	**0.20**
Stucco	**0.47**	**105**	**0.20**
Tile in Mortar	**0.67**	**120**	**0.20**
Solid Wood (Fir)	**0.07**	**32**	**0.33**

Table G-13: Thermal Mass Coverings and Associated Categories[1]

Category 1: Acceptable as Exposed Mass In Any Location. Floor coverings/surfaces determined to be acceptable on any portion of a slab designated as thermal mass in any location within the conditioned space of a residential building.

Category 2: Acceptable as Exposed Mass Only In Kitchens, Dining Areas that are Extensions to Kitchens, Pantries, Bathrooms, Laundry Rooms, Service Porches and/or Entries. Concrete slabs with Category 2 surfaces must be treated as covered slab in other locations.

Covering/Surface	Category
Brick	1
Concrete, Exposed Aggregate	1
Concrete, Painted and/or Polished	2
Concrete, Stamped	1
Concrete, Unfinished	2
Hardwood Veneer (except when installed on wood sleepers)	1
Resin-based Poured Flooring	2
Stone or Stone Veneer	1
Sheet Vinyl	2
Tile, Asphalt	2
Tile, Ceramic	1
Tile, Terrazzo	1
Tile, Vinyl	2
Tile, Vinyl-Asbestos	2
Other Masonry Materials with Permanent Finishes Similar to Those Specified in Category 1 and Acceptable to the Building Official	1

1. The intent of these guidelines is to prevent taking exposed thermal mass credit for floor materials that are likely to be covered with carpeting at the time of building occupancy.

   Building officials should allow flexibility for building designs that include radiant floor heating systems and/or that incorporate large areas of uncarpeted slabs in conjunction with south facing glazing as an integral component of deliberately designed passive solar structures.

Table G-14: Standard U-Values of Wood Frame Roofs and Ceilings[1]

Ceiling Insul.	Framing Spacing	Reference Name[2]	U-Value
R-0[3]	16" o.c.	R.0.2X6.16	0.298
R-0[3]	24" o.c.	R.0.2X4.24[4]	0.306
R-11[3]	16" o.c.	R.11.2X6.16	0.077
R-11[3]	24" o.c.	R.11.2X4.24	0.077
R-13[3]	16" o.c.	R.13.2X6.16	0.069
R-13[3]	24" o.c.	R.13.2X4.24	0.069
R-19	16" o.c.	R.19.2X8.16	0.051
R-19	24" o.c.	R.19.2X4.24	0.047
R-22	16" o.c.	R.22.2X10.16	0.045
R-22	24" o.c.	R.22.2X4.24	0.041
R-30	16" o.c.	R.30.2X10.16	0.036
R-30	16" o.c.	R.30.2X12.16	0.034
R-30	24" o.c.	R.30.2X4.24	0.031
R-38	16" o.c.	R.38.2X12.16	0.030
R-38	16" o.c.	R.38.2X14.16	0.028
R-38	24" o.c.	R.38.2X4.24	0.024
R-49	16" o.c.	R.49.2X4.16	0.019
R-49	24" o.c.	R.49.2X4.24	0.019

1. Based on ASHRAE Parallel Heat Flow Calculation, 1993 *ASHRAE Handbook of Fundamentals*.
2. The names given to the standard assemblies used to calculate these U-values in Appendix H.
3. Does not meet the minimum level required as a mandatory measure (see Chapter 2, Part 2.2).
4. Roof/ceiling assemblies whose reference names list 2X4 framing include an attic space.

Table G-15: Standard U-Values of Wood Frame Walls[1]

Insul.	Wall Spacing	Framing Name[2]	Reference U-Value
R-0[3]	16" o.c.	W.0.2X4.16	0.385
R-0[3]	24" o.c.	W.0.2X4.24	0.393
R-7[3]	16" o.c.	W.7.2X4.16	0.130
R-7[3]	24" o.c.	W.7.2X4.24	0.127
R-11[3]	16" o.c.	W.11.2X4.16	0.098
R-11[3]	24" o.c.	W.11.2X4.24	0.094
R-13	16" o.c.	W.13.2X4.16	0.088
R-13	24" o.c.	W.13.2X4.24	0.085
R-15	16" o.c.	W.15.2X4.16	0.081
R-15	24" o.c.	W.15.2X4.24	0.077
R-19	16" o.c.	W.19.2X6.16	0.065
R-19	24" o.c.	W.19.2X6.24	0.063
R-21	16" o.c.	W.21.2X6.16	0.059
R-21	24" o.c.	W.21.2X6.24	0.056
R-25	16" o.c.	W.25.2X6.16	0.046
R-29	16" o.c.	W.29.2X4.16	0.035
Solid core wood door (no insulation)		D.O.SCW	0.330

1. Based on ASHRAE Parallel Heat Flow Calculation, 1993 *ASHRAE Handbook of Fundamentals*.
2. The names given to the standard assemblies used to calculate these U-values in Appendix H.
3. Does not meet the minimum level required as a mandatory measure (see Chapter 2, Part 2.2).

Table G-16: Standard U-Values of Wood Frame Raised Floors[1]

Floor Insul.	Condition	Reference Name[2]	U-Value
R-0[3]	No C.S.4	FXO.2X6.16	0.241
R-0[3]	With C.S.[4]	FC0.2X6.16	0.097
R-11[3]	No C.S.	FX11.2X6.16	0.071
R-11[3]	With C.S.	FC11.2X6.16	0.050
R-13	No C.S.	FX13.2X6.16	0.064
R-13	With C.S.	FC13.2X6.16	0.046
R-19	No C.S.	FX19.2X8.16	0.049
R-19	With C.S.	FC19.2X8.16	0.037
R-21	No C.S.	FX21.2X8.16	0.045
R-21	With C.S.	FC21.2X8.16	0.035
R-30	No C.S.	FX30.2X10.16	0.034
R-30	With C.S.	FC30.2X10.16	0.028

1. Based on ASHRAE Parallel Heat Flow Calculation, 1993 *ASHRAE Handbook of Fundamentals*.
2. The names given to the standard assemblies used to calculate these U-values in Appendix H.
3. Does not meet the minimum level required as a mandatory measure (see Chapter 2, Part 2.2).
4. No C.S. = No Crawl Space, With C.S. = With Crawl Space

Table G-17: Standard U-Values of Wood Foam Panel Roofs/Ceilings and Walls[1]

Roof/ Ceiling Insul.	Framing Spacing	Reference Name[2]	U-Value
R-14[3]	48" o.c.	RP.14.2X4.48	0.058
R-22	48" o.c.	RP.22.2X6.48	0.041
R-28	48" o.c.	RP.28.2X8.48	0.033
R-35	48" o.c.	RP.35.2X10.48	0.027
Wall Insul.	**Framing Spacing**	**Reference Name**	**U-Value**
R-14	48" o.c.	WP.14.2X4.48	0.062
R-22	48" o.c.	WP.22.2X6.48	0.044

1. Based on ASHRAE Parallel Heat Flow Calculation, 1993 *ASHRAE Handbook of Fundamentals*.
2. The names given to the standard assemblies used to calculate these U-values in Appendix H.
3. Does not meet the minimum level required as a mandatory measure (see Chapter 2, Part 2.2).

Table G-18: U-Values of Steel Frame Walls[1]

Wall Insul.	Framing Type	Framing Spacing	Reference Name[2]	U-Value[3]
R-11[3]	2x4	16" o.c.	W.11.S2X4.16	0.202
R-11[3]	2x4	24" o.c.	W.11.S2X4.24	0.173
R-13[3]	2x4	16" o.c.	W.13.S2X4.16	0.195
R-13[3]	2x4	24" o.c.	W.13.S2X4.24	0.165
R-15[3]	2x4	16" o.c.	W.15.S2X4.16	0.189
R-15[3]	2x4	24" o.c.	W.15.S2X4.24	0.158
R-19[3]	2x6	16" o.c.	W.19.S2X6.16	0.162
R-19[3]	2x6	24" o.c.	W.19.S2X6.24	0.135
R-21[3]	2x6	16" o.c.	W.21.S2X6.16	0.157
R-21[3]	2x6	24" o.c.	W.21.S2X6.24	0.130
R-22[3]	2x6	16" o.c.	W.21.S2X6.16	0.158
R-22[3]	2x6	24" o.c.	W.21.S2X6.24	0.132

1. Based on ASHRAE Zone Method Calculation, 1993 *ASHRAE Handbook of Fundamentals*.
2. The names given to the standard assemblies used to calculate these U-values in Appendix H.
3. Does not meet the minimum level required as a mandatory measure (see Chapter 2, Part 2.2).

Appendix H
Construction Assemblies

This appendix contains a detailed listing of many common construction assemblies for roofs/ceilings, walls and floors. For a summary of standard construction assembly U-values, see Tables G-14 through G-18 in the Glossary. For additional information, see R-value and U-value in the Glossary.

Reference Name: W.0.2x4.16

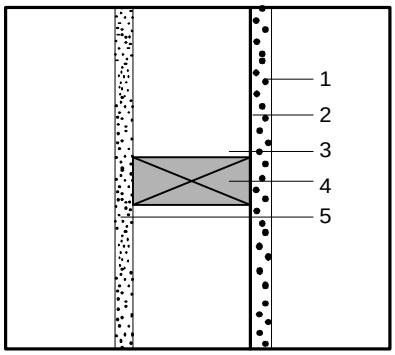

Sketch of Construction Assembly

Assembly Type: (check one) — Floor; ✓ Wall; Ceiling/Roof

Framing Material: Wood

Framing Size: 2 × 4

Framing Spacing: 16 "o.c.

Framing Percentage: (check one)

Wall:	✓	15% (16"o.c.)
		12% (24"o.c.)
		9% (48"o.c.)
Floor/Ceiling		10% (16"o.c.)
		7% (24"o.c.)
		4% (48"o.c.)

Wall Weight / sf: (Packages only) NA

List of Construction Components	Cavity (R_c)	Frame (R_f)
Outside Surface Air Film	0.170	0.170
1. 0.875 in stucco	0.175	0.175
2. Building paper (felt)	0.060	0.600
3. 3.5" & greater air space; heat sideways	0.850	-----
4. 2x4 in fir framing	-----	3.465
5. 0.50 in gypsum or plaster board	0.450	0.450
6.		
7.		
Inside Surface Air Film	0.680	0.680
Total Unadjusted R-Values:	2.385	5.000
	R_c	R_f

Framing Adjustment Calculation:

$$\frac{[(1/2.385)}{1\div R_c} \times \frac{(1\text{-}15/100)]}{1\text{-}(Fr.\%\div 100)} + \frac{[(1/5.00)}{1\div R_f} \times \frac{(15/100)]}{Fr.\%\div 100} = \mathbf{0.385}$$

Total U-Value

$$\frac{1/0.385}{1\div \text{Total U-Value}} = 2.591$$

Total R-Value

Reference Name: W.0.S2x4.16

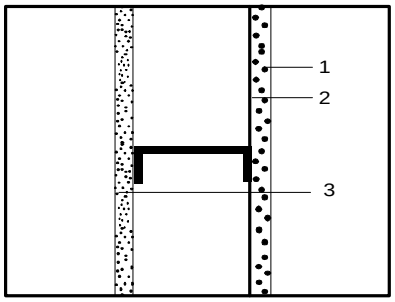

Sketch of Construction Assembly

Assembly Type: (check one) — Floor; ✓ Wall; Ceiling/Roof

Framing Material: Metal

Framing Spacing: 16 "o.c.

Framing Size:

Actual Depth	3.625
Actual Width	1.625

Cavity Insulation:

R-value	0.850
Knock-out (%)	15.00
Web Thickness	0.060

Insulation Tape R-value:

Interior Flange	0.0
Exterior Flange	0.0

List of Construction Components	R-Value
Outside Surface Air Film	0.170
1. 0.875 in stucco	0.175
2. Building paper (felt)	0.060
3. 0.50 in gypsum or plaster board	0.450
4.	
5.	
6.	
7.	
Inside Surface Air Film	0.680

Calculation:

From EZFRAME = **0.449**

Total U-Value

$$\frac{1/0.449}{1\div \text{Total U-Value}} = 2.23$$

Total R-Value

Reference Name: W.0.2x4.24

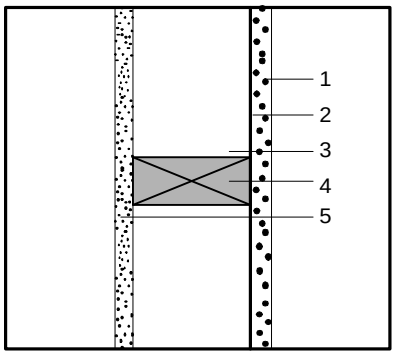

Sketch of Construction Assembly

Assembly Type: (check one)		Floor	
	✓	Wall	
		Ceiling/Roof	
Framing Material:	Wood		
Framing Size:	2 × 4		
Framing Spacing:	24	"o.c.	
Framing Percentage: (check one)	Wall:		15% (16"o.c.)
		✓	12% (24"o.c.)
			9% (48"o.c.)
	Floor/Ceiling		10% (16"o.c.)
			7% (24"o.c.)
			4% (48"o.c.)
Wall Weight / sf: (Packages only)	NA		

List of Construction Components		**R-Value** Cavity (R_c)	Frame (R_f)
	Outside Surface Air Film	0.170	0.170
1.	0.875 in stucco	0.175	0.175
2.	Building paper (felt)	0.060	0.600
3.	3.5" & greater air space; heat sideways	0.850	-----
4.	2x4 in fir framing	-----	3.465
5.	0.50 in gypsum or plaster board	0.450	0.450
6.			
7.			
	Inside Surface Air Film	0.680	0.680
	Total Unadjusted R-Values:	2.385	5.000
		R_c	R_f

Framing Adjustment Calculation:

$$[(\underset{1\div R_c}{1/2.385}) \times (\underset{1-(Fr.\% \div 100)}{1-12/100})] + [(\underset{1\div R_f}{1/5.000}) \times (\underset{Fr.\% \div 100}{12/100})] = \boxed{0.393}$$

Total U-Value

$$\underset{1\div \text{Total U-Value}}{1/0.393} = 2.546$$

Total R-Value

Reference Name: W.0.S2x4.24

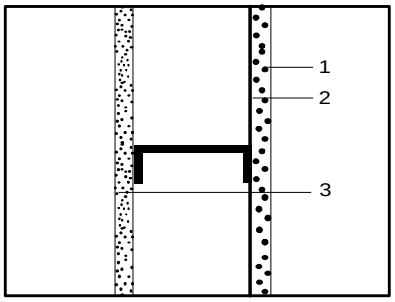

Sketch of Construction Assembly

Assembly Type: (check one)		Floor	
	✓	Wall	
		Ceiling/Roof	
Framing Material:	Metal		
Framing Spacing:	24	"o.c.	
Framing Size:		Actual Depth	3.625
		Actual Width	1.625
Cavity Insulation:		R-value	0.850
		Knock-out (%)	15.00
		Web Thickness	0.060
Insulation Tape R-value:		Interior Flange	0.0
		Exterior Flange	0.0

List of Construction Components		**R-Value**
	Outside Surface Air Film	0.170
1.	0.875 in stucco	0.175
2.	Building paper (felt)	0.060
3.	0.50 in gypsum or plaster board	0.450
4.		
5.		
6.		
7.		
	Inside Surface Air Film	0.680

Calculation:

From EZFRAME = **0.443**

Total U-Value

$$\underset{1\div \text{Total U-Value}}{1/0.443} = 2.260$$

Total R-Value

Reference Name: W.7.2x4.16

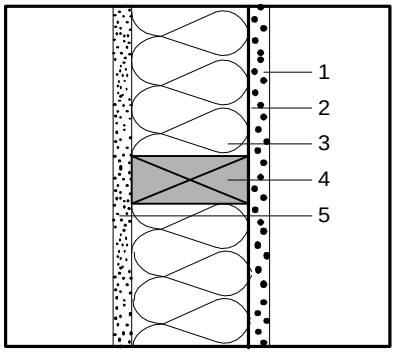

Sketch of Construction Assembly

Assembly Type: (check one)
- ____ Floor
- ✓ Wall
- ____ Ceiling/Roof

Framing Material: Wood

Framing Size: 2 × 4

Framing Spacing: 16 "o.c.

Framing Percentage: (check one)
- Wall: ✓ 15% (16"o.c.)
- Wall: ____ 12% (24"o.c.)
- Wall: ____ 9% (48"o.c.)
- Floor/Ceiling: ____ 10% (16"o.c.)
- Floor/Ceiling: ____ 7% (24"o.c.)
- Floor/Ceiling: ____ 4% (48"o.c.)

Wall Weight / sf: NA
(Packages only)

List of Construction Components	R-Value: Cavity (R_c)	R-Value: Frame (R_f)
Outside Surface Air Film	0.170	0.170
1. 0.875 in stucco	0.175	0.175
2. Building paper (felt)	0.060	0.600
3. R-7 fiberglass insulation	7.000	-----
4. 2x4 in fir framing	-----	3.465
5. 0.50 in gypsum or plaster board	0.450	0.450
6.		
7.		
Inside Surface Air Film	0.680	0.680
Total Unadjusted R-Values:	8.535	5.000
	R_c	R_f

Framing Adjustment Calculation:

$$\left[\left(\frac{1}{8.535}\right)_{1\div R_c} \times \left(\frac{1-15/100}{1-(Fr.\%\div 100)}\right)\right] + \left[\left(\frac{1}{5.00}\right)_{1\div R_f} \times \left(\frac{15}{100}\right)_{Fr.\%\div 100}\right] = \boxed{0.130}$$

Total U-Value

$$\frac{1}{0.130}_{1\div \text{Total U-Value}} = 7.69$$

Total R-Value

Reference Name: W.7.S2x4.16

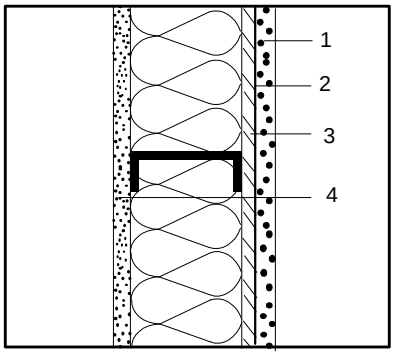

Sketch of Construction Assembly

Assembly Type: (check one)
- ____ Floor
- ✓ Wall
- ____ Ceiling/Roof

Framing Material: Metal

Framing Spacing: 16 "o.c.

Framing Size:
- Actual Depth: 3.625
- Actual Width: 1.625

Cavity Insulation:
- R-value: 7.00
- Knock-out (%): 15.00
- Web Thickness: 0.0600

Insulation Tape R-value:
- Interior Flange: 0.0
- Exterior Flange: 0.0

List of Construction Components	R-Value
Outside Surface Air Film	0.170
1. 0.875 in stucco	0.175
2. Building paper (felt)	0.060
3. 0.50 in polyisocyanurate	3.500
4. 0.50 in gypsum or plaster board	0.450
5.	
6.	
7.	
Inside Surface Air Film	0.680

Calculation:

From EZFRAME = **0.125**

Total U-Value

$$\frac{1}{0.125}_{1\div \text{Total U-Value}} = 7.990$$

Total R-Value

Reference Name: W.7.2x4.24

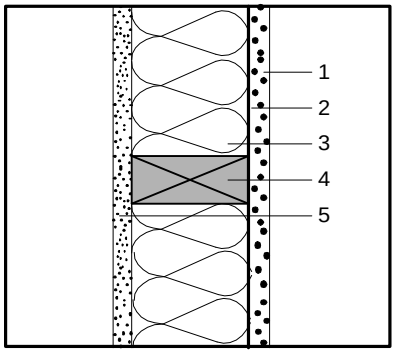

Sketch of Construction Assembly

Assembly Type: (check one) — Floor: ; Wall: ✓ ; Ceiling/Roof:

Framing Material: Wood

Framing Size: 2 × 4

Framing Spacing: 24 "o.c.

Framing Percentage: (check one)

Wall:		15% (16"o.c.)
	✓	12% (24"o.c.)
		9% (48"o.c.)
Floor/Ceiling		10% (16"o.c.)
		7% (24"o.c.)
		4% (48"o.c.)

Wall Weight / sf: NA (Packages only)

List of Construction Components	R-Value: Cavity (R_c)	R-Value: Frame (R_f)
Outside Surface Air Film	0.170	0.170
1. 0.875 in stucco	0.175	0.175
2. Building paper (felt)	0.060	0.600
3. R-7 Fiberglass Insulation	7.000	-----
4. 2x4 in fir framing	-----	3.465
5. 0.50 in gypsum or plaster board	0.450	0.450
6.		
7.		
Inside Surface Air Film	0.680	0.680
Total Unadjusted R-Values:	8.535	5.000
	R_c	R_f

Framing Adjustment Calculation:

$$\left[\left(\frac{1}{8.535}\right)_{1\div R_c} \times \left(\frac{1-15/100}{1-(Fr.\%\div 100)}\right)\right] + \left[\left(\frac{1}{5.00}\right)_{1\div R_f} \times \left(\frac{15}{Fr.\%\div 100}\right)\right] = \mathbf{0.127}$$

Total U-Value

$$\frac{1}{1\div \text{Total U-Value}} = \frac{1}{0.127} = 7.874$$

Total R-Value

Reference Name: W.7.S2x4.24

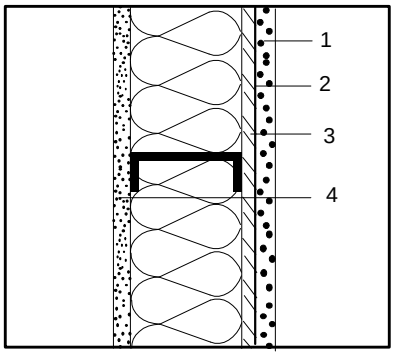

Sketch of Construction Assembly

Assembly Type: (check one) — Floor: ; Wall: ✓ ; Ceiling/Roof:

Framing Material: Metal

Framing Spacing: 24 "o.c.

Framing Size:

Actual Depth	3.625
Actual Width	1.625

Cavity Insulation:

R-value	7.00
Knock-out (%)	15.00
Web Thickness	0.0600

Insulation Tape R-value:

Interior Flange	0.0
Exterior Flange	0.0

List of Construction Components	R-Value
Outside Surface Air Film	0.170
1. 0.875 in stucco	0.175
2. Building paper (felt)	0.060
3. 0.50 in polyisocyanurate	3.500
4. 0.50 in gypsum or plaster board	0.450
5.	
6.	
7.	
Inside Surface Air Film	0.680

Calculation:

From EZFRAME = **0.117**

Total U-Value

$$\frac{1}{1\div \text{Total U-Value}} = \frac{1}{0.117} = 8.530$$

Total R-Value

Reference Name: W.11.2x4.16

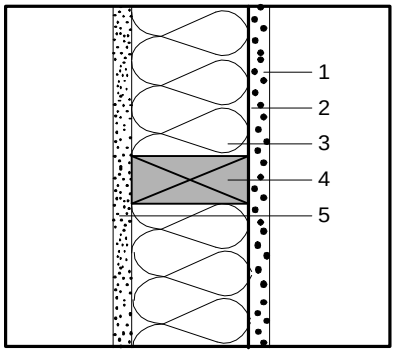

Sketch of Construction Assembly

Assembly Type: (check one) — Floor: ; Wall: ✓ ; Ceiling/Roof:

Framing Material: Wood

Framing Size: 2 × 4

Framing Spacing: 16 "o.c.

Framing Percentage: (check one)

Wall:	✓	15% (16"o.c.)
		12% (24"o.c.)
		9% (48"o.c.)
Floor/Ceiling		10% (16"o.c.)
		7% (24"o.c.)
		4% (48"o.c.)

Wall Weight / sf: NA (Packages only)

List of Construction Components	R-Value: Cavity (R_c)	R-Value: Frame (R_f)
Outside Surface Air Film	0.170	0.170
1. 0.875 in stucco	0.175	0.175
2. Building paper (felt)	0.060	0.060
3. R-11 fiberglass insulation	11.000	-----
4. 2x4 in fir framing	-----	3.465
5. 0.50 in gypsum or plaster board	0.450	0.450
6.		
7.		
Inside Surface Air Film	0.680	0.680
Total Unadjusted R-Values:	12.535	5.00
	R_c	R_f

Framing Adjustment Calculation:

$$\left[\left(\frac{1}{12.535}\right)_{1\div R_c} \times \left(\frac{1-15/100}{1-(\text{Fr.}\%\div 100)}\right)\right] + \left[\left(\frac{1}{5.00}\right)_{1\div R_f} \times \left(\frac{15}{\text{Fr.}\%\div 100}\right)\right] = \mathbf{0.098}$$

Total U-Value

$$\frac{1}{0.098}_{1\div\text{Total U-Value}} = 10.204$$

Total R-Value

Reference Name: W.11.S2x4.16

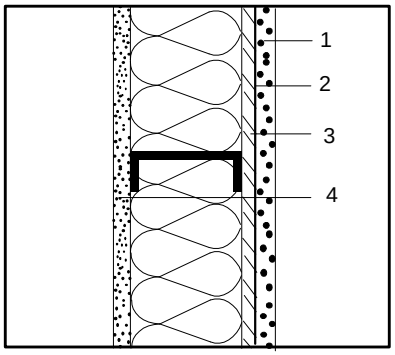

Sketch of Construction Assembly

Assembly Type: (check one) — Floor: ; Wall: ✓ ; Ceiling/Roof:

Framing Material: Metal

Framing Spacing: 16 "o.c.

Framing Size: Actual Depth 3.625; Actual Width 1.625

Cavity Insulation: R-value 11.00; Knock-out (%) 15.00; Web Thickness 0.060

Insulation Tape R-value: Interior Flange 0.0; Exterior Flange 0.0

List of Construction Components	R-Value
Outside Surface Air Film	0.170
1. 0.875 in stucco	0.175
2. Building paper (felt)	0.060
3. 0.75 in polyisocyanurate	5.250
4. 0.50 in gypsum or plaster board	0.450
5.	
6.	
7.	
Inside Surface Air Film	0.680

Calculation:

From EZFRAME = **0.096**

Total U-Value

$$\frac{1}{0.096}_{1\div\text{Total U-Value}} = 10.360$$

Total R-Value

Reference Name: W.11.2x4.24

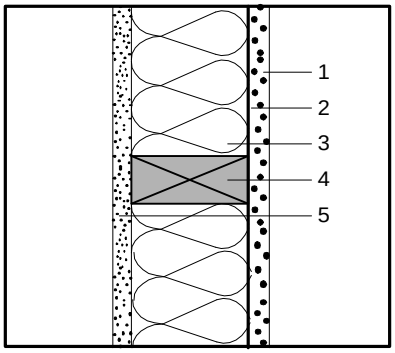

Sketch of Construction Assembly

Assembly Type: (check one) — Floor: ; Wall: ✓ ; Ceiling/Roof:

Framing Material: Wood

Framing Size: 2 × 4

Framing Spacing: 24 "o.c.

Framing Percentage: (check one)

Wall:		15% (16"o.c.)
	✓	12% (24"o.c.)
		9% (48"o.c.)
Floor/Ceiling		10% (16"o.c.)
		7% (24"o.c.)
		4% (48"o.c.)

Wall Weight / sf: NA (Packages only)

List of Construction Components	R-Value: Cavity (R_c)	R-Value: Frame (R_f)
Outside Surface Air Film	0.170	0.170
1. 0.875 in stucco	0.175	0.175
2. Building paper (felt)	0.060	0.600
3. R-11 fiberglass insulation	11.00	-----
4. 2x4 in fir framing	-----	3.465
5. 0.50 in gypsum or plaster board	0.450	0.450
6.		
7.		
Inside Surface Air Film	0.680	0.680
Total Unadjusted R-Values:	12.535	5.00
	R_c	R_f

Framing Adjustment Calculation:

$$\left[\left(\frac{1}{12.535}\right)_{1\div R^c} \times \left(\frac{1-12/100}{}\right)_{1-(Fr.\%\div 100)}\right] + \left[\left(\frac{1}{5.00}\right)_{1\div R^f} \times \left(\frac{12}{100}\right)_{Fr.\%\div 100}\right] = \boxed{0.094}$$

Total U-Value

$$\frac{1/0.094}{1\div \text{Total U-Value}} = 10.638$$

Total R-Value

Reference Name: W.11.S2x4.24

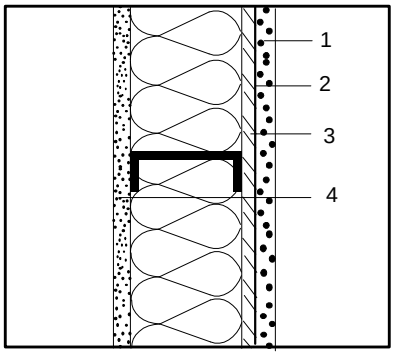

Sketch of Construction Assembly

Assembly Type: (check one) — Floor: ; Wall: ✓ ; Ceiling/Roof:

Framing Material: Metal

Framing Spacing: 24 "o.c.

Framing Size:

Actual Depth	3.625
Actual Width	1.625

Cavity Insulation:

R-value	11.000
Knock-out (%)	15.000
Web Thickness	0.060

Insulation Tape R-value:

Interior Flange	0.0
Exterior Flange	0.0

List of Construction Components	R-Value
Outside Surface Air Film	0.170
1. 0.875 in stucco	0.175
2. Building paper (felt)	0.060
3. 0.75 in polyisocyanurate	5.250
4. 0.50 in gypsum or plaster board	0.450
5.	
6.	
7.	
Inside Surface Air Film	0.680

Calculation:

From EZFRAME = **0.090**

Total U-Value

$$\frac{1/0.090}{1\div \text{Total U-Value}} = 11.140$$

Total R-Value

Reference Name: W.13.2x4.16

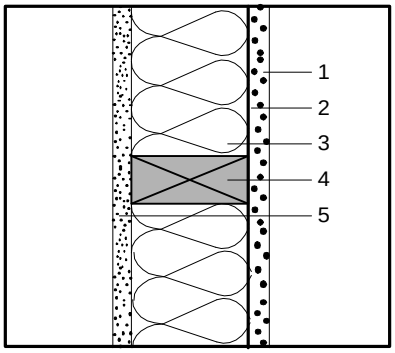

Sketch of Construction Assembly

Assembly Type: (check one) — Floor: ; Wall: ✓ ; Ceiling/Roof:

Framing Material: Wood

Framing Size: 2 × 4

Framing Spacing: 16 "o.c.

Framing Percentage: (check one)

Wall:	✓	15% (16"o.c.)
		12% (24"o.c.)
		9% (48"o.c.)
Floor/Ceiling		10% (16"o.c.)
		7% (24"o.c.)
		4% (48"o.c.)

Wall Weight / sf: (Packages only) NA

List of Construction Components

		R-Value Cavity (R_c)	R-Value Frame (R_f)
	Outside Surface Air Film	0.170	0.170
1.	0.875 in stucco	0.175	0.175
2.	Building paper (felt)	0.060	0.600
3.	R-13 fiberglass insulation	13.00	-----
4.	2x4 in fir framing	-----	3.465
5.	0.50 in gypsum or plaster board	0.450	0.450
6.			
7.			
	Inside Surface Air Film	0.680	0.680
	Total Unadjusted R-Values:	14.535	5.00
		R_c	R_f

Framing Adjustment Calculation:

$$\left[\left(\frac{1}{14.535}\right)_{1\div R^c} \times \left(\frac{1-15/100}{}\right)_{1-(Fr.\%\div 100)}\right] + \left[\left(\frac{1}{5.00}\right)_{1\div R^f} \times \left(\frac{15}{100}\right)_{Fr.\%\div 100}\right] = \boxed{0.088}$$

Total U-Value

$$\frac{1}{0.088}_{1\div \text{Total U-Value}} = 11.364$$

Total R-Value

Reference Name: W.13.S2x4.16

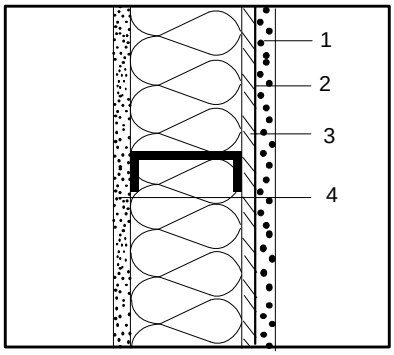

Sketch of Construction Assembly

Assembly Type: (check one) — Floor: ; Wall: ✓ ; Ceiling/Roof:

Framing Material: Metal

Framing Spacing: 16 "o.c.

Framing Size:

Actual Depth	3.625
Actual Width	1.625

Cavity Insulation:

R-value	13.000
Knock-out (%)	15.00
Web Thickness	0.060

Insulation Tape R-value:

Interior Flange	0.0
Exterior Flange	0.0

List of Construction Components

		R-Value
	Outside Surface Air Film	0.170
1.	0.875 in stucco	0.175
2.	Building paper (felt)	0.060
3.	1.00 in Polyisocyanurate	7.000
4.	0.50 in gypsum or plaster board	0.450
5.		
6.		
7.		
	Inside Surface Air Film	0.680

Calculation:

From EZFRAME = **0.081**

Total U-Value

$$\frac{1}{0.081}_{1\div \text{Total U-Value}} = 12.330$$

Total R-Value

Reference Name: W.13.2x4.24

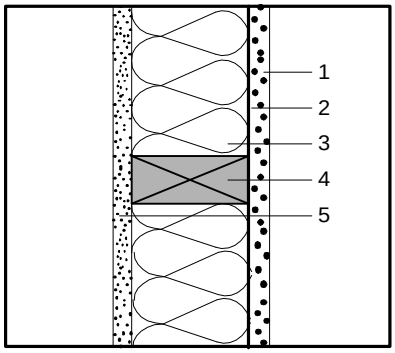

Sketch of Construction Assembly

Assembly Type: (check one) — Floor: ; Wall: ✓ ; Ceiling/Roof:

Framing Material: Wood

Framing Size: 2 × 4

Framing Spacing: 24 "o.c.

Framing Percentage: (check one)

Wall:		15% (16"o.c.)
	✓	12% (24"o.c.)
		9% (48"o.c.)
Floor/Ceiling		10% (16"o.c.)
		7% (24"o.c.)
		4% (48"o.c.)

Wall Weight / sf: NA (Packages only)

List of Construction Components	Cavity (R_c)	Frame (R_f)
Outside Surface Air Film	0.170	0.170
1. 0.875 in stucco	0.175	0.175
2. Building paper (felt)	0.060	0.600
3. R-13 fiberglass insulation	13.000	-----
4. 2x4 in fir framing	-----	3.465
5. 0.50 in gypsum or plaster board	0.450	0.450
6.		
7.		
Inside Surface Air Film	0.680	0.680
Total Unadjusted R-Values:	14.535	5.00
	R_c	R_f

Framing Adjustment Calculation:

$$\left[\left(\frac{1}{14.535}\right)_{1\div R^c} \times \left(\frac{1-12/100}{1-(\text{Fr.}\%\div 100)}\right)\right] + \left[\left(\frac{1}{5.00}\right)_{1\div R^f} \times \left(\frac{12}{\text{Fr.}\%\div 100}\right)\right] = \frac{1/0.085}{1\div\text{Total U-Value}}$$

0.085
Total U-Value

10.620
Total R-Value

Reference Name: W.13.S2x4.24

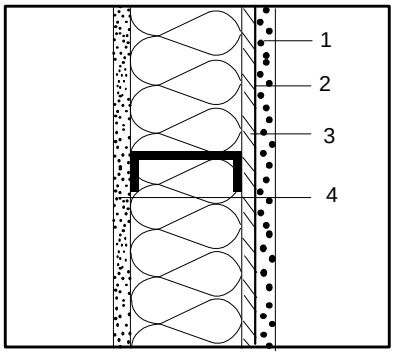

Sketch of Construction Assembly

Assembly Type: (check one) — Floor: ; Wall: ✓ ; Ceiling/Roof:

Framing Material: Metal

Framing Spacing: 24 "o.c.

Framing Size:

Actual Depth	3.625
Actual Width	1.625

Cavity Insulation:

R-value	13.00
Knock-out (%)	15.00
Web Thickness	0.060

Insulation Tape R-value:

Interior Flange	0.0
Exterior Flange	0.0

List of Construction Components	R-Value
Outside Surface Air Film	0.170
1. 0.875 in stucco	0.175
2. Building paper (felt)	0.060
3. 0.75 in polyisocyanurate	5.250
4. 0.50 in gypsum or plaster board	0.450
5.	
6.	
7.	
Inside Surface Air Film	0.680

Calculation:

From EZFRAME = **0.087**
Total U-Value

$$\frac{1/0.087}{1\div\text{Total U-Value}} = 11.460$$

Total R-Value

Reference Name: WP.14.2x4.48

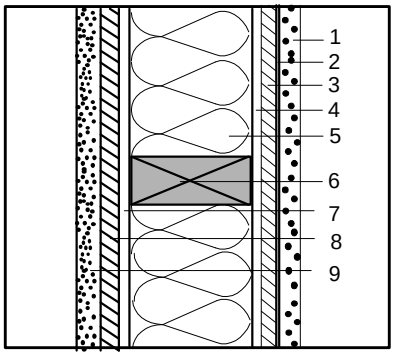

Sketch of Construction Assembly

Assembly Type: (check one)
- Floor
- ✓ Wall
- Ceiling/Roof

Framing Material: Wood

Framing Size: 2 × 4

Framing Spacing: 48 "o.c.

Framing Percentage: (check one)

Wall:		15% (16"o.c.)
		12% (24"o.c.)
	✓	9% (48"o.c.)
Floor/Ceiling		10% (16"o.c.)
		7% (24"o.c.)
		4% (48"o.c.)

Wall Weight / sf: (Packages only) NA

List of Construction Components

		R-Value Cavity (R_c)	R-Value Frame (R_f)
	Outside Surface Air Film	0.170	0.170
1.	0.875 in stucco	0.175	0.175
2.	Building paper (felt)	0.060	0.060
3.	0.375 in plywood	0.470	0.470
4.	0.875 in Furring Channel	0.800	0.800
5.	3 5/8 in EPS foam insulation @ R-3.85/in	13.956	-----
6.	2X4 in fir framing	-----	3.465
7.	0.875 in Furring Channel	0.800	0.800
8.	0.375 in plywood	0.470	0.470
9.	0.50 in gypsum or plaster board	0.450	0.450
	Inside Surface Air Film	0.680	0.680
	Total Unadjusted R-Values:	18.031	7.540
		R_c	R_f

Framing Adjustment Calculation:

[(1/18.031) × (1-9/100)] + [(1/7.540) × (9/100)] = **0.062**

1÷R_c 1-(Fr.% ÷100) 1÷R_f Fr.% ÷100

Total U-Value

1/0.062 = 16.129

1÷Total U-Value **Total R-Value**

Reference Name: WP.14.S2x4.48

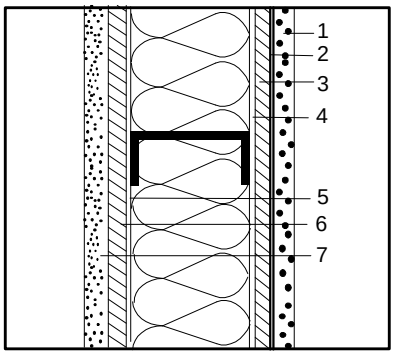

Sketch of Construction Assembly

Assembly Type: (check one)
- Floor
- ✓ Wall
- Ceiling/Roof

Framing Material: Metal

Framing Spacing: 48 "o.c.

Framing Size:

Actual Depth	3.625
Actual Width	1.625

Cavity Insulation:

R-value	14.00
Knock-out (%)	15.00
Web Thickness	0.060

Insulation Tape R-value:

Interior Flange	0.0
Exterior Flange	0.0

List of Construction Components

		R-Value
	Outside Surface Air Film	0.170
1.	0.875 in stucco	0.175
2.	Building paper (felt)	0.060
3.	1.00 in polyisocyanurate	7.000
4.	0.875 in Furring Channel	0.800
5.	0.875 in Furring Channel	0.800
6.	0.375 in plywood	0.470
7.	0.50 in gypsum or plaster board	0.450
	Inside Surface Air Film	0.680

Calculation:

From EZFRAME = **0.062**

Total U-Value

1/0.062 = 16.26

1÷Total U-Value **Total R-Value**

Reference Name: W.15.2x4.16

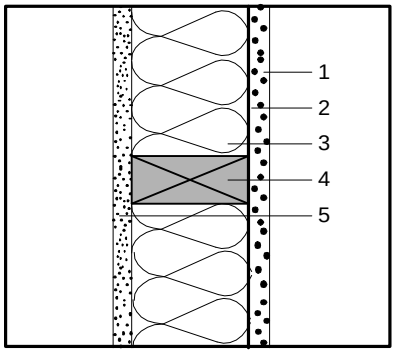

Sketch of Construction Assembly

Assembly Type: (check one)
- Floor
- ✓ Wall
- Ceiling/Roof

Framing Material: Wood

Framing Size: 2 × 4

Framing Spacing: 16 "o.c.

Framing Percentage: (check one)
- Wall: ✓ 15% (16"o.c.)
- 12% (24"o.c.)
- 9% (48"o.c.)
- Floor/Ceiling: 10% (16"o.c.)
- 7% (24"o.c.)
- 4% (48"o.c.)

Wall Weight / sf: NA (Packages only)

List of Construction Components	R-Value Cavity (R_c)	R-Value Frame (R_f)
Outside Surface Air Film	0.170	0.170
1. 0.875 in stucco	0.175	0.175
2. Building paper (felt)	0.060	0.060
3. R-15 fiberglass insulation	15.000	-----
4. 2x4 in fir framing	-----	3.465
5. 0.50 in gypsum or plaster board	0.450	0.450
6.		
7.		
Inside Surface Air Film	0.680	0.680
Total Unadjusted R-Values:	16.353	5.000
	R_c	R_f

Framing Adjustment Calculation:

$$\left[\left(\frac{1}{1\div Rc}\right) \times \left(\frac{1-15/100}{1-(Fr.\%\div 100)}\right)\right] + \left[\left(\frac{1}{1\div R_f}\right) \times \left(\frac{15/100}{Fr.\%\div 100}\right)\right] = \mathbf{0.081}$$

Total U-Value

$$\frac{1/0.081}{1\div \text{Total U-Value}} = 12.346$$

Total R-Value

Reference Name: W.15.S2x4.16

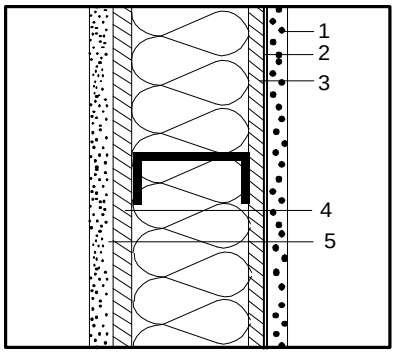

Sketch of Construction Assembly

Assembly Type: (check one)
- Floor
- ✓ Wall
- Ceiling/Roof

Framing Material: Metal

Framing Spacing: 16 "o.c.

Framing Size:
- Actual Depth: 3.625
- Actual Width: 1.625

Cavity Insulation:
- R-value: 15.00
- Knock-out (%): 15.00
- Web Thickness: 0.060

Insulation Tape R-value:
- Interior Flange:
- Exterior Flange:

List of Construction Components	R-Value
Outside Surface Air Film	0.170
1. 0.875 in stucco	0.175
2. Building paper (felt)	0.060
3. 0.50 in Polyisocyanurate	3.500
4. 0.50 in Polyisocyanurate	3.500
5. 0.50 in gypsum or plaster board	0.450
6.	
7.	
Inside Surface Air Film	0.680

Calculation:

From EZFRAME = **0.080**

Total U-Value

$$\frac{1/0.080}{1\div \text{Total U-Value}} = 12.510$$

Total R-Value

Reference Name: W.15.2x4.24

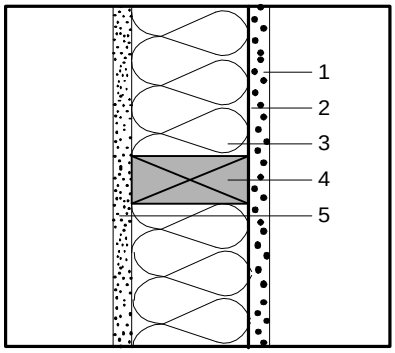

Sketch of Construction Assembly

Assembly Type: (check one) — Floor; ✓ Wall; Ceiling/Roof

Framing Material: Wood

Framing Size: 2 × 4

Framing Spacing: 24 "o.c.

Framing Percentage: (check one)

Wall:		15% (16"o.c.)
	✓	12% (24"o.c.)
		9% (48"o.c.)
Floor/Ceiling		10% (16"o.c.)
		7% (24"o.c.)
		4% (48"o.c.)

Wall Weight / sf: NA (Packages only)

List of Construction Components	Cavity (R_c)	Frame (R_f)
Outside Surface Air Film	0.170	0.170
1. 0.875 in stucco	0.175	0.175
2. Building paper (felt)	0.060	0.060
3. R-15 fiberglass insulation	15.000	-----
4. 2x4 in fir framing	-----	3.465
5. 0.50 in gypsum or plaster board	0.450	0.450
6.		
7.		
Inside Surface Air Film	0.680	0.680
Total Unadjusted R-Values:	16.535	5.00
	R_c	R_f

Framing Adjustment Calculation:

$$\left[\left(\frac{1}{1\div Rc}\right) \times \left(\frac{1-12/100}{1-(Fr.\%\div 100)}\right)\right] + \left[\left(\frac{1}{1\div R_f}\right) \times \left(\frac{12/100}{Fr.\%\div 100}\right)\right] = \mathbf{0.077}$$

Total U-Value

$$\frac{1/0.077}{1\div \text{Total U-Value}} = 12.987$$

Total R-Value

Reference Name: W.15.S2x4.24

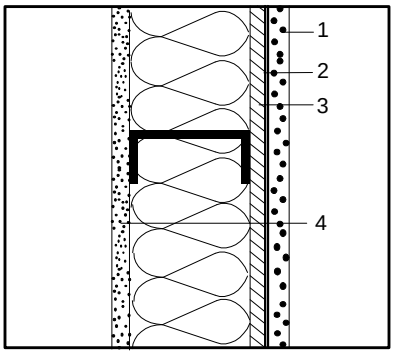

Sketch of Construction Assembly

Assembly Type: (check one) — Floor; ✓ Wall; Ceiling/Roof

Framing Material: Metal

Framing Spacing: 24 "o.c.

Framing Size: Actual Depth 3.625; Actual Width 1.625

Cavity Insulation: R-value 15.00; Knock-out (%) 15.00; Web Thickness 0.060

Insulation Tape R-value: Interior Flange; Exterior Flange

List of Construction Components	R-Value
Outside Surface Air Film	0.170
1. 0.875 in stucco	0.175
2. Building paper (felt)	0.060
3. 1 in Polyisocyanurate	7.000
4. 0.50 in gypsum or plaster board	0.450
5.	
6.	
7.	
Inside Surface Air Film	0.680

Calculation:

From EZFRAME = **0.074**

Total U-Value

$$\frac{1/0.074}{1\div \text{Total U-Value}} = 13.470$$

Total R-Value

Reference Name: W.19.2x6.16

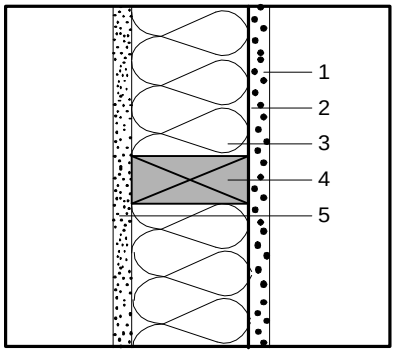

Sketch of Construction Assembly

Assembly Type: (check one) — Floor: ; Wall: ✓; Ceiling/Roof:

Framing Material: Wood

Framing Size: 2 × 6

Framing Spacing: 16 "o.c.

Framing Percentage: (check one)

Wall:	✓	15% (16"o.c.)
		12% (24"o.c.)
		9% (48"o.c.)
Floor/Ceiling		10% (16"o.c.)
		7% (24"o.c.)
		4% (48"o.c.)

Wall Weight / sf: NA (Packages only)

List of Construction Components	Cavity (R_c)	Frame (R_f)
Outside Surface Air Film	0.170	0.170
1. 0.875 in stucco	0.175	0.175
2. Building paper (felt)	0.060	0.060
3. R-19 fiberglass inuslation	17.800	-----
4. 2x6 in fir framing	-----	5.445
5. 0.50 in gypsum or plaster board	0.450	0.450
6.		
7.		
Inside Surface Air Film	0.680	0.680
Total Unadjusted R-Values:	19.335	6.980
	R_c	R_f

Framing Adjustment Calculation:

$$\left[\left(\frac{1}{1 \div Rc}\right) \times \left(\frac{1-15/100}{1-(Fr.\% \div 100)}\right)\right] + \left[\left(\frac{1}{1 \div R_f}\right) \times \left(\frac{15/100}{Fr.\% \div 100}\right)\right] = \textbf{0.065}$$

Total U-Value

$$\frac{1/0.065}{1 \div \text{Total U-Value}} = 15.385$$

Total R-Value

Reference Name: W.19.S2x6.16

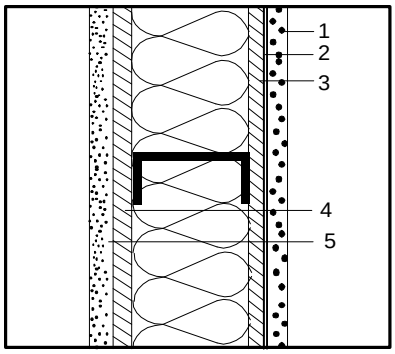

Sketch of Construction Assembly

Assembly Type: (check one) — Floor: ; Wall: ✓; Ceiling/Roof:

Framing Material: Metal

Framing Spacing: 16 "o.c.

Framing Size: Actual Depth 6.000; Actual Width 1.625

Cavity Insulation: R-value 19.00; Knock-out (%) 15.00; Web Thickness 0.060

Insulation Tape R-value: Interior Flange ; Exterior Flange

List of Construction Components	R-Value
Outside Surface Air Film	0.170
1. 0.875 in stucco	0.175
2. Building paper (felt)	0.060
3. 0.75 in polyiscyanurate	5.250
4. 0.50 in polyiscyanurate	3.500
5. 0.50 in gypsum or plaster board	0.450
6.	
7.	
Inside Surface Air Film	0.680

Calculation:

From EZFRAME = **0.064**

Total U-Value

$$\frac{1/0.064}{1 \div \text{Total U-Value}} = 15.530$$

Total R-Value

Reference Name: W.19.2x6.24

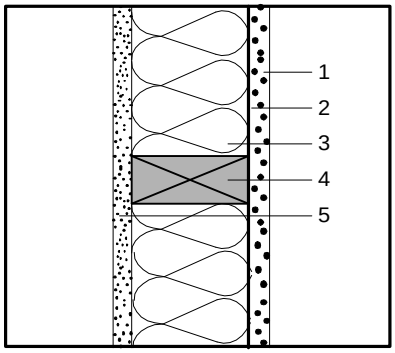

Sketch of Construction Assembly

Assembly Type: (check one) — Floor; ✓ Wall; Ceiling/Roof

Framing Material: Wood

Framing Size: 2 × 6

Framing Spacing: 24 "o.c.

Framing Percentage: (check one)

Wall:		15% (16"o.c.)
	✓	12% (24"o.c.)
		9% (48"o.c.)
Floor/Ceiling		10% (16"o.c.)
		7% (24"o.c.)
		4% (48"o.c.)

Wall Weight / sf: NA (Packages only)

List of Construction Components	R-Value Cavity (R_c)	R-Value Frame (R_f)
Outside Surface Air Film	0.170	0.170
1. 0.875 in stucco	0.175	0.175
2. Building paper (felt)	0.060	0.060
3. R-19 fiberglass insulation	17.800	-----
4. 2x6 in fir framing	-----	5.445
5. 0.50 in gypsum or plaster board	0.450	0.450
6.		
7.		
Inside Surface Air Film	0.680	0.680
Total Unadjusted R-Values:	19.335	6.980
	R_c	R_f

Framing Adjustment Calculation:

[(1/19.335) × (1-12/100)] + [(1/6.980) × (12/100)] = **0.063**

1÷Rc; 1-(Fr.% ÷100); 1÷R_f; Fr.% ÷100

Total U-Value

1/0.063 (1÷Total U-Value) = 15.873

Total R-Value

Reference Name: W.19.S2x6.24

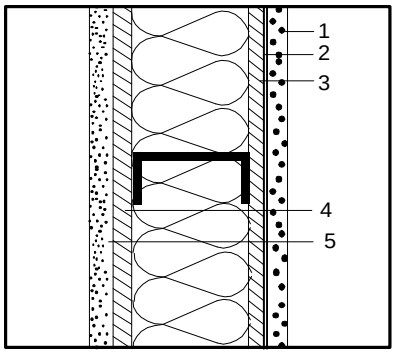

Sketch of Construction Assembly

Assembly Type: (check one) — Floor; ✓ Wall; Ceiling/Roof

Framing Material: Metal

Framing Spacing: 24 "o.c.

Framing Size:

Actual Depth	6.000
Actual Width	1.625

Cavity Insulation:

R-value	19.00
Knock-out (%)	15.00
Web Thickness	0.060

Insulation Tape R-value:

Interior Flange	
Exterior Flange	

List of Construction Components	R-Value
Outside Surface Air Film	0.170
1. 0.875 in stucco	0.175
2. Building paper (felt)	0.060
3. 0.75 in polyisocyanurate	5.250
4. 0.50 in polyisocyanurate	3.500
5. 0.50 in gypsum board	0.450
6.	
7.	
Inside Surface Air Film	0.680

Calculation:

From EZFRAME = **0.060**

Total U-Value

1/0.060 (1÷Total U-Value) = 16.750

Total R-Value

Reference Name: W.21.2x6.16

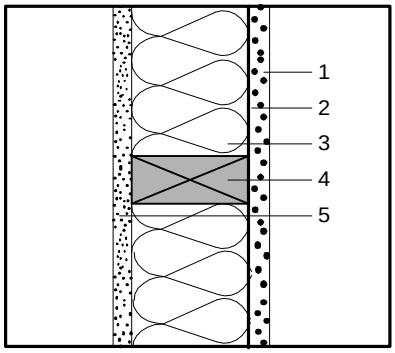

Sketch of Construction Assembly

Assembly Type: (check one) — Floor; ✓ Wall; Ceiling/Roof

Framing Material: Wood

Framing Size: 2 × 6

Framing Spacing: 16 "o.c.

Framing Percentage: (check one)

Wall:		15% (16"o.c.)
	✓	12% (24"o.c.)
		9% (48"o.c.)
Floor/Ceiling		10% (16"o.c.)
		7% (24"o.c.)
		4% (48"o.c.)

Wall Weight / sf: NA (Packages only)

List of Construction Components	R-Value: Cavity (R_c)	R-Value: Frame (R_f)
Outside Surface Air Film	0.170	0.170
1. 0.875 in stucco	0.175	0.175
2. Building paper (felt)	0.060	0.060
3. R-21 fiberglass insulation	21.000	-----
4. 2x6 in fir framing	-----	5.445
5. 0.50 in gypsum or plaster board	0.450	0.450
6.		
7.		
Inside Surface Air Film	0.680	0.680
Total Unadjusted R-Values:	22.535	6.980
	R_c	R_f

Framing Adjustment Calculation:

$$\left[\left(\frac{1/22.535}{1\div R_c}\right) \times \left(\frac{1\text{-}15/100}{1\text{-(Fr.\%}\div 100)}\right)\right] + \left[\left(\frac{1/6.980}{1\div R_f}\right) \times \left(\frac{15/100}{\text{Fr.\%}\div 100}\right)\right] = \textbf{0.059}$$

Total U-Value

$$\frac{1/0.059}{1\div\text{Total U-Value}} = 16.949$$

Total R-Value

Reference Name: W.21.S2x6.16

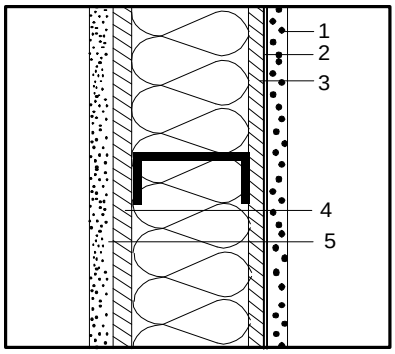

Sketch of Construction Assembly

Assembly Type: (check one) — Floor; ✓ Wall; Ceiling/Roof

Framing Material: Metal

Framing Spacing: 16 "o.c.

Framing Size: Actual Depth 6.000; Actual Width 1.625

Cavity Insulation: R-value 21.00; Knock-out (%) 15.00; Web Thickness 0.060

Insulation Tape R-value: Interior Flange; Exterior Flange

List of Construction Components	R-Value
Outside Surface Air Film	0.170
1. 0.875 in stucco	0.175
2. Building paper (felt)	0.060
3. 1.0 in polyisocyanurate	7.000
4. 0.5 in polyisocyanurate	3.500
5. 0.50 in gypsum or plaster board	0.450
6.	
7.	
Inside Surface Air Film	0.680

Calculation:

From EZFRAME = **0.057**

Total U-Value

$$\frac{1/0.057}{1\div\text{Total U-Value}} = 17.440$$

Total R-Value

Reference Name: W.21.2x6.24

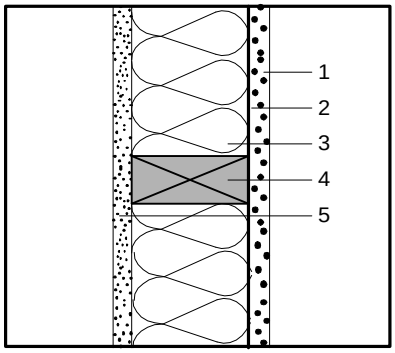

Sketch of Construction Assembly

Assembly Type: (check one) — Floor: ; Wall: ✓ ; Ceiling/Roof:

Framing Material: Wood

Framing Size: 2 × 6

Framing Spacing: 24 "o.c.

Framing Percentage: (check one)

Wall:		15% (16"o.c.)
	✓	12% (24"o.c.)
		9% (48"o.c.)
Floor/Ceiling		10% (16"o.c.)
		7% (24"o.c.)
		4% (48"o.c.)

Wall Weight / sf: NA (Packages only)

List of Construction Components	R-Value Cavity (R_c)	R-Value Frame (R_f)
Outside Surface Air Film	0.170	0.170
1. 0.875 in stucco	0.175	0.175
2. Building paper (felt)	0.060	0.060
3. R-21 fiberglass insulation	21.000	-----
4. 2x6 in fir framing	-----	3.465
5. 0.50 in gypsum or plaster board	0.450	0.450
6.		
7.		
Inside Surface Air Film	0.680	0.680
Total Unadjusted R-Values:	22.535	6.980
	R_c	R_f

Framing Adjustment Calculation:

$$[(\frac{1/22.535}{1\div Rc}) \times (\frac{1-12/100}{1-(Fr.\%\div 100)})] + [(\frac{1/6.98}{1\div R_f}) \times (\frac{12/100}{Fr.\%\div 100})] = \mathbf{0.056}$$

Total U-Value

$$\frac{1/0.056}{1\div \text{Total U-Value}} = 17.857$$

Total R-Value

Reference Name: W.21.S2x6.24

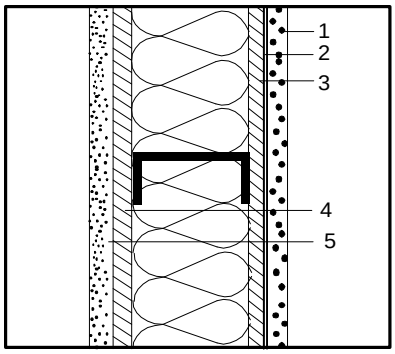

Sketch of Construction Assembly

Assembly Type: (check one) — Floor: ; Wall: ✓ ; Ceiling/Roof:

Framing Material: Metal

Framing Spacing: 24 "o.c.

Framing Size: Actual Depth 6.000; Actual Width 1.625

Cavity Insulation: R-value 21.00; Knock-out (%) 15.00; Web Thickness 0.060

Insulation Tape R-value: Interior Flange ; Exterior Flange

List of Construction Components	R-Value
Outside Surface Air Film	0.170
1. 0.875 in stucco	0.175
2. Building paper (felt)	0.060
3. 1.0 in polyisocyanurate	7.000
4. 0.5 in polyisocyanurate	3.500
5. 0.50 in gypsum or plaster board	0.450
6.	
7.	
Inside Surface Air Film	0.680

Calculation:

From EZFRAME = **0.053**

Total U-Value

$$\frac{1/0.053}{1\div \text{Total U-Value}} = 18.720$$

Total R-Value

Reference Name: WP.22.2x6.48

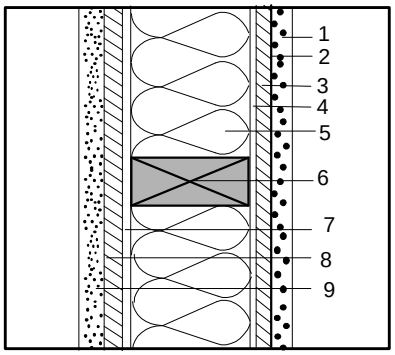

Sketch of Construction Assembly

Assembly Type: (check one)
- Floor
- ✓ Wall
- Ceiling/Roof

Framing Material: Wood

Framing Size: 2 × 6

Framing Spacing: 48 "o.c.

Framing Percentage: (check one)
- Wall: 15% (16"o.c.)
- Wall: 12% (24"o.c.)
- Wall: ✓ 9% (48"o.c.)
- Floor/Ceiling: 10% (16"o.c.)
- Floor/Ceiling: 7% (24"o.c.)
- Floor/Ceiling: 4% (48"o.c.)

Wall Weight / sf: NA (Packages only)

List of Construction Components	R-Value Cavity (R_c)	R-Value Frame (R_f)
Outside Surface Air Film	0.170	0.170
1. 0.875 in stucco	0.175	0.175
2. Building paper (felt)	0.060	0.060
3. 0.375 in plywood	0.470	0.470
4. 0.875 in Furring Channel	0.800	0.800
5. R-21.656 EPS foam insulation	21.656	-----
6. 2X6 in fir framing	-----	5.445
7. 0.875 in Furring Channel	0.800	0.800
8. 0.375 in plywood	0.470	0.470
9. 0.50 in gypsum or plaster board	0.450	0.450
Inside Surface Air Film	0.680	0.680
Total Unadjusted R-Values:	25.731	9.520
	R_c	R_f

Framing Adjustment Calculation:

$$\left[\left(\frac{1}{25.731}\right)_{1\div R_c} \times \left(\frac{1-9/100}{1-(Fr.\%\div 100)}\right) + \left[\left(\frac{1}{9.52}\right)_{1\div R_f} \times \left(\frac{9/100}{Fr.\%\div 100}\right)\right] = \mathbf{0.044}$$

Total U-Value

$$\frac{1/0.044}{1\div \text{Total U-Value}} = 22.727$$

Total R-Value

Reference Name: WP.22.S2x6.48

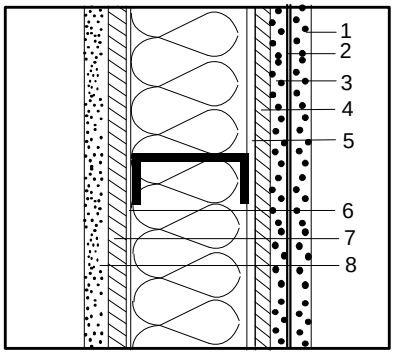

Sketch of Construction Assembly

Assembly Type: (check one)
- Floor
- ✓ Wall
- Ceiling/Roof

Framing Material: Metal

Framing Spacing: 48 "o.c.

Framing Size:
- Actual Depth: 6.000
- Actual Width: 1.625

Cavity Insulation:
- R-value: 21.700
- Knock-out (%): 15.00
- Web Thickness: 0.060

Insulation Tape R-value:
- Interior Flange:
- Exterior Flange:

List of Construction Components	R-Value
Outside Surface Air Film	0.170
1. 0.875 in stucco	0.175
2. Building paper (felt)	0.060
3. 1.50 in polyisocyanurate	10.500
4. 0.50 in plywood	0.630
5. 0.875 in Furring channel	0.800
6. 0.875 in Furring channel	0.800
7. 0.50 in plywood	0.630
8. 0.50 in gypsum or plaster board	0.450
Inside Surface Air Film	0.680

Calculation:

From EZFRAME = **0.044**

Total U-Value

$$\frac{1/0.044}{1\div \text{Total U-Value}} = 22.83$$

Total R-Value

Reference Name: R.0.2x6.16

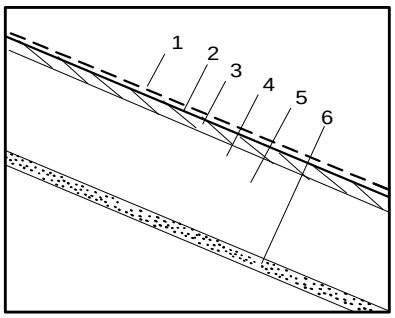

Sketch of Construction Assembly

Assembly Type: (check one) — Floor; Wall; ✓ Ceiling/Roof

Framing Material: Wood

Framing Size: 2 × 6

Framing Spacing: 16 "o.c.

Framing Percentage: (check one)

Wall:		15% (16"o.c.)
		12% (24"o.c.)
		9% (48"o.c.)
Floor/Ceiling	✓	10% (16"o.c.)
		7% (24"o.c.)
		4% (48"o.c.)

Wall Weight / sf: NA (Packages only)

List of Construction Components	Cavity (R_c)	Frame (R_f)
Outside Surface Air Film	0.170	0.170
1. Asphalt shingle roofing	0.440	0.440
2. Building paper (felt)	0.060	0.060
3. 0.50 in plywood	0.620	0.620
4. 3.5 in & greater air space; heat flow up	**0.800**	-----
5. 2x6 in fir framing	-----	5.445
6. 0.50 in gypsum or plaster board	0.450	0.450
7.		
Inside Surface Air Film	0.610	0.610
Total Unadjusted R-Values:	3.150	7.795
	R_c	R_f

Framing Adjustment Calculation:

$$[(\tfrac{1}{3.150}) \times (\tfrac{1-10/100}{1-(Fr.\%\div 100)})] + [(\tfrac{1/7.795}{1\div R_f}) \times (\tfrac{10/100}{Fr.\%\div 100})] = \textbf{0.298}$$

Total U-Value

$$\frac{1/0.298}{1\div \text{Total U-Value}} = 3.356$$

Total R-Value

Reference Name: R.0.S2X6.16

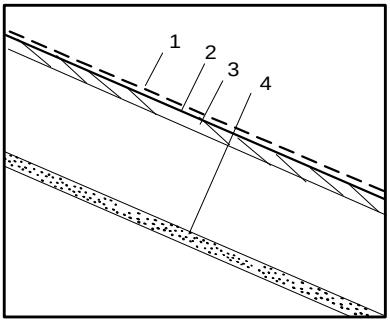

Sketch of Construction Assembly

Assembly Type: (check one) — Floor; Wall; ✓ Ceiling/Roof

Framing Material: Metal

Framing Spacing: 16 "o.c.

Framing Size:

Actual Depth	6.000
Actual Width	1.625

Cavity Insulation:

R-value	0.800
Knock-out (%)	15.00
Web Thickness	0.06

Insulation Tape R-value:

Interior Flange	
Exterior Flange	

List of Construction Components	R-Value
Outside Surface Air Film	0.170
1. Asphalt shingle	0.440
2. Building paper (felt)	0.060
3. 0.50 in plywood	0.630
4. 0.50 in gypsum or plaster board	0.450
5.	
6.	
7.	
Inside Surface Air Film	0.620

Calculation:

From EZFRAME = **0.323**

Total U-Value

$$\frac{1/0.323}{1\div \text{Total U-Value}} = 3.090$$

Total R-Value

Reference Name: R.0.2x4.24

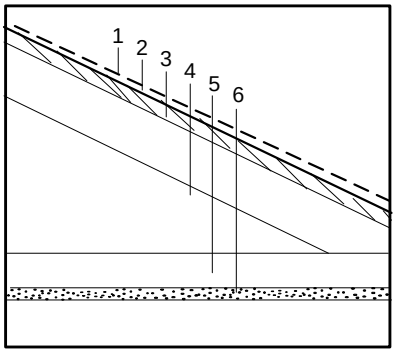

Sketch of Construction Assembly

Assembly Type: (check one)
- ____ Floor
- ____ Wall
- ✓ Ceiling/Roof

Framing Material: Wood

Framing Size: 2 × 4

Framing Spacing: 24 "o.c.

Framing Percentage: (check one)

Wall:	____	15% (16"o.c.)
	____	12% (24"o.c.)
	____	9% (48"o.c.)
Floor/Ceiling	____	10% (16"o.c.)
	✓	7% (24"o.c.)
	____	4% (48"o.c.)

Wall Weight / sf: NA
(Packages only)

List of Construction Components	Cavity (R_c)	Frame (R_f)
Outside Surface Air Film	0.170	0.170
1. Asphalt shingle roofing	0.440	0.440
2. Building paper (felt)	0.060	0.060
3. 0.50 in plywood	0.620	0.620
4. 3.5" & greater air space; heat sidways	0.800	0.800
5. 2x4 in fir framing	-----	3.465
6. 0.50 in gypsum or plaster board	0.450	0.450
7.		
Inside Surface Air Film	0.610	0.610
Total Unadjusted R-Values:	3.150	6.615
	R_c	R_f

Framing Adjustment Calculation:

$$\left[\left(\frac{1}{3.150}\right)_{1\div R_c} \times \left(\frac{1-7}{100}\right)_{1-(\text{Fr.}\%\div 100)}\right] + \left[\left(\frac{1}{6.615}\right)_{1\div R_f} \times \left(\frac{7}{100}\right)_{\text{Fr.}\%\div 100}\right] = \mathbf{0.306}$$

Total U-Value

$$\frac{1}{0.306}_{1\div\text{Total U-Value}} = \underset{\textbf{Total R-Value}}{3.268}$$

Reference Name: R.0.S2X4.24

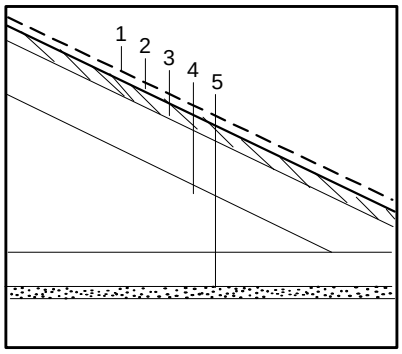

Sketch of Construction Assembly

Assembly Type: (check one)
- ____ Floor
- ____ Wall
- ✓ Ceiling/Roof

Framing Material: Metal

Framing Spacing: 24 "o.c.

Framing Size:
- Actual Depth: 3.625
- Actual Width: 1.625

Cavity Insulation:
- R-value: 0.800
- Knock-out (%): 15.00
- Web Thickness: 0.060

Insulation Tape R-value:
- Interior Flange: ____
- Exterior Flange: ____

List of Construction Components	R-Value
Outside Surface Air Film	0.170
1. Asphalt shingle	0.440
2. Building paper (felt)	0.060
3. 0.50 in plywood	0.630
4. 3.5" & greater air space; heat sidways	0.800
5. 0.50 in gypsum or plaster board	0.450
6.	
7.	
Inside Surface Air Film	0.610

Calculation:

From EZFRAME = **0.316**

Total U-Value

$$\frac{1}{0.316}_{1\div\text{Total U-Value}} = \underset{\textbf{Total R-Value}}{3.160}$$

Reference Name: R.11.2x6.16

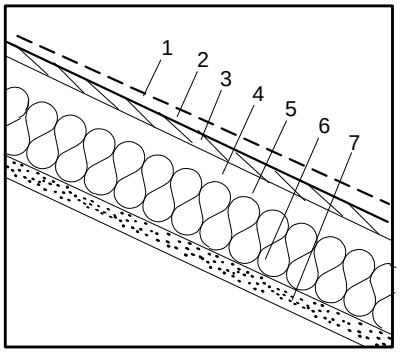

Sketch of Construction Assembly

Assembly Type: (check one)
- ____ Floor
- ____ Wall
- ✓ Ceiling/Roof

Framing Material: Wood

Framing Size: 2 × 6

Framing Spacing: 16 "o.c.

Framing Percentage: (check one)

Wall:	____	15% (16"o.c.)
	____	12% (24"o.c.)
	____	9% (48"o.c.)
Floor/Ceiling	✓	10% (16"o.c.)
	____	7% (24"o.c.)
	____	4% (48"o.c.)

Wall Weight / sf: (Packages only) NA

List of Construction Components	R-Value Cavity (R_c)	R-Value Frame (R_f)
Outside Surface Air Film	0.170	0.170
1. Asphalt shingle roofing	0.440	0.440
2. Building paper (felt)	0.060	0.060
3. 0.50 in plywood	0.620	0.620
4. 2.0 in air space; heat flow up	0.780	-----
5. 2X6 in fir framing	-----	5.445
6. R-11 fiberglass insulation	11.000	-----
7. 0.50 in gypsum or plaster board	0.450	0.450
Inside Surface Air Film	0.610	0.610
Total Unadjusted R-Values:	14.130	7.795
	R_c	R_f

Framing Adjustment Calculation:

$$[(\frac{1}{14.130}) \times (\frac{1-10}{100})] + [(\frac{1}{7.795}) \times (\frac{10}{100})] = \mathbf{0.077}$$

$1 \div R_c$; $1-(Fr.\% \div 100)$; $1 \div R_f$; $Fr.\% \div 100$

Total U-Value

$$\frac{1}{0.077} = 12.987$$

$1 \div$ Total U-Value

Total R-Value

Reference Name: R.11.S2X6.16

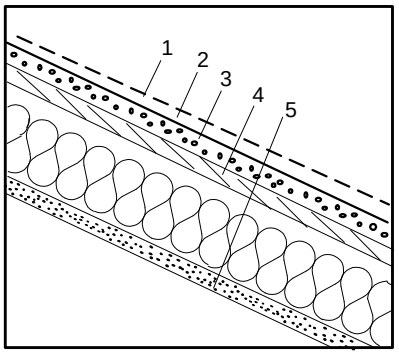

Sketch of Construction Assembly

Assembly Type: (check one)
- ____ Floor
- ____ Wall
- ✓ Ceiling/Roof

Framing Material: Metal

Framing Spacing: 16 "o.c.

Framing Size:

Actual Depth	6.000
Actual Width	1.625

Cavity Insulation:

R-value	11.800
Knock-out (%)	15.000
Web Thickness	0.060

Insulation Tape R-value:

Interior Flange	
Exterior Flange	

List of Construction Components	R-Value
Outside Surface Air Film	0.170
1. Asphalt shingle	0.440
2. Building paper (felt)	0.060
3. 0.75 in Polyisocyanurate	5.250
4. 0.625 in Plywood	0.780
5. 0.50 in gypsum or plaster board	0.450
6.	
7.	
Inside Surface Air Film	0.620

Calculation:

From EZFRAME = **0.071**

Total U-Value

$$\frac{1}{0.071} = 14.060$$

$1 \div$ Total U-Value

Total R-Value

Reference Name: R.11.2x4.24

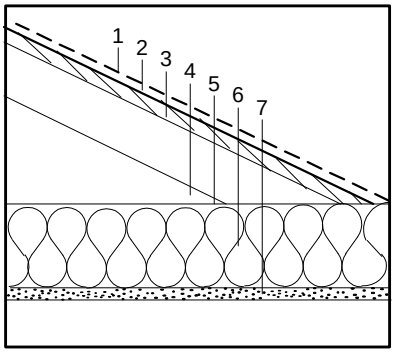

Sketch of Construction Assembly

Assembly Type: (check one) — Floor; Wall; ✓ Ceiling/Roof

Framing Material: Wood

Framing Size: 2 × 4

Framing Spacing: 24 "o.c.

Framing Percentage: (check one)

Wall:		15% (16"o.c.)
		12% (24"o.c.)
		9% (48"o.c.)
Floor/Ceiling		10% (16"o.c.)
	✓	7% (24"o.c.)
		4% (48"o.c.)

Wall Weight / sf: (Packages only) NA

List of Construction Components	Cavity (R_c)	Frame (R_f)
Outside Surface Air Film	0.170	0.170
1. Asphalt shingle roofing	0.440	0.440
2. Building paper (felt)	0.060	0.060
3. 0.50 in plywood	0.620	0.620
4. 3.50 in & greater air space; heat flow up	0.800	0.800
5. R-11 fiberglass insulation	11.000	-----
6. 2X4 in fir framing	-----	3.465
7. 0.50 in gypsum or plaster board	0.450	0.450
Inside Surface Air Film	0.610	0.610
Total Unadjusted R-Values:	14.150	6.615
	R_c	R_f

Framing Adjustment Calculation:

$$[(\tfrac{1}{14.150}) \times (\tfrac{1-7}{100})] + [(\tfrac{1}{6.615}) \times (\tfrac{7}{100})] = 0.077$$

($1 \div R_c$; $1-(Fr.\% \div 100)$; $1 \div R_f$; $Fr.\% \div 100$)

Total U-Value

$$\frac{1}{0.077} = 12.987$$

(1 ÷ Total U-Value)

Total R-Value

Reference Name: R.11.S2X4.24

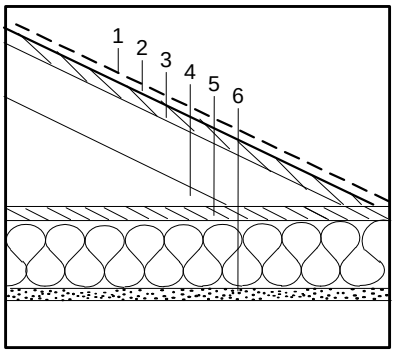

Sketch of Construction Assembly

Assembly Type: (check one) — Floor; Wall; ✓ Ceiling/Roof

Framing Material: Metal

Framing Spacing: 24 "o.c.

Framing Size: Actual Depth 3.625; Actual Width 1.625

Cavity Insulation: R-value 11.000; Knock-out (%) 15.000; Web Thickness 0.060

Insulation Tape R-value: Interior Flange; Exterior Flange

List of Construction Components	R-Value
Outside Surface Air Film	0.170
1. Asphalt shingle	0.440
2. Building paper (felt)	0.060
3. 0.50 in plywood	0.630
4. 3.50 in & greater air space; heat flow up	0.800
5. 0.75 in Polyisocyanurate	5.250
6. 0.50 in gypsum or plaster board	0.450
7.	
Inside Surface Air Film	0.610

Calculation:

From EZFRAME = **0.069**

Total U-Value

$$\frac{1}{0.069} = 14.500$$

(1 ÷ Total U-Value)

Total R-Value

Reference Name: R.13.2x6.16

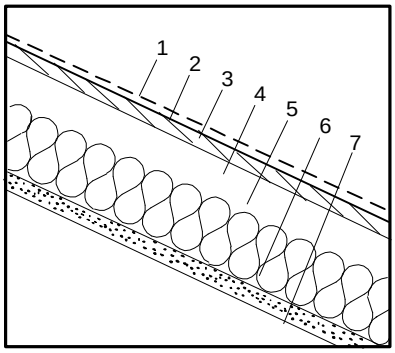

Sketch of Construction Assembly

Assembly Type: (check one) — Floor: ____ Wall: ____ Ceiling/Roof: ✓

Framing Material: Wood

Framing Size: 2 × 6

Framing Spacing: 16 "o.c.

Framing Percentage: (check one)

Wall:	____	15% (16"o.c.)
	____	12% (24"o.c.)
	____	9% (48"o.c.)
Floor/Ceiling	✓	10% (16"o.c.)
	____	7% (24"o.c.)
	____	4% (48"o.c.)

Wall Weight / sf: NA (Packages only)

List of Construction Components	R-Value Cavity (R_c)	R-Value Frame (R_f)
Outside Surface Air Film	0.170	0.170
1. Asphalt shingle roofing	0.440	0.440
2. Building paper (felt)	0.060	0.060
3. 0.50 in plywood	0.620	0.620
4. 2.0 in air space; heat flow up	0.780	-----
5. 2X6 in fir framing	-----	5.445
6. R-13 fiberglass insulation	13.000	-----
7. 0.50 in gypsum or plaster board	0.450	0.450
Inside Surface Air Film	0.610	0.610
Total Unadjusted R-Values:	16.130	7.795
	R_c	R_f

Framing Adjustment Calculation:

$$[(\frac{1}{16.130}) \times (\frac{1-10/100}{1-(\text{Fr.\%} \div 100)})] + [(\frac{1}{7.795}) \times (\frac{10/100}{\text{Fr.\%} \div 100})] = \mathbf{0.069}$$

Total U-Value

$$\frac{1/0.069}{1 \div \text{Total U-Value}} = \mathbf{14.493}$$

Total R-Value

Reference Name: R.13.S2X6.16

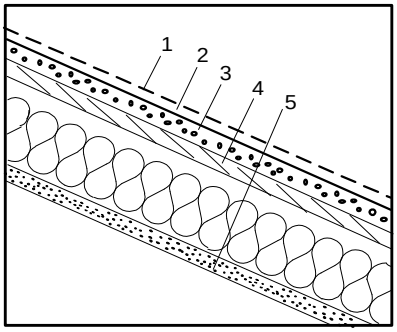

Sketch of Construction Assembly

Assembly Type: (check one) — Floor: ____ Wall: ____ Ceiling/Roof: ✓

Framing Material: Metal

Framing Spacing: 16 "o.c.

Framing Size:

Actual Depth	6.00
Actual Width	1.625

Cavity Insulation:

R-value	13.800
Knock-out (%)	15.000
Web Thickness	0.060

Insulation Tape R-value:

Interior Flange	
Exterior Flange	

List of Construction Components	R-Value
Outside Surface Air Film	0.170
1. Asphalt shingle	0.440
2. Building paper (felt)	0.060
3. 1.00 in polyisocyanurate	7.000
4. 0.50 in plywood	0.630
5. 0.50 in gypsum or plaster board	0.450
6.	
7.	
Inside Surface Air Film	0.620

Calculation:

From EZFRAME = **0.062**

Total U-Value

$$\frac{1/0.062}{1 \div \text{Total U-Value}} = \mathbf{16.130}$$

Total R-Value

Reference Name: R.13.2x4.24

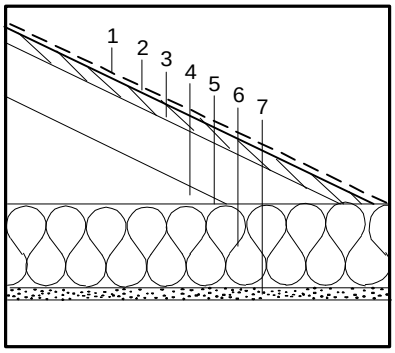

Sketch of Construction Assembly

Assembly Type: (check one)
- ___ Floor
- ___ Wall
- ✓ Ceiling/Roof

Framing Material: Wood

Framing Size: 2 × 4

Framing Spacing: 24 "o.c.

Framing Percentage: (check one)

Wall:	___	15% (16"o.c.)
	___	12% (24"o.c.)
	___	9% (48"o.c.)
Floor/Ceiling	___	10% (16"o.c.)
	✓	7% (24"o.c.)
	___	4% (48"o.c.)

Wall Weight / sf: (Packages only) NA

List of Construction Components		R-Value Cavity (R_c)	R-Value Frame (R_f)
	Outside Surface Air Film	0.170	0.170
1.	Asphalt shingle roofing	0.440	0.440
2.	Building paper (felt)	0.060	0.060
3.	0.50 in plywood	0.620	0.620
4.	3.50 in & greater air space; heat flow up	0.800	0.800
5.	R-13 fiberglass insulation	13.000	-----
6.	2X4 in fir framing	-----	3.465
7.	0.50 in gypsum or plaster board	0.450	0.450
	Inside Surface Air Film	0.610	0.610
	Total Unadjusted R-Values:	16.150	6.615
		R_c	R_f

Framing Adjustment Calculation:

[(1/16.150) × (1-7/100)] + [(1/6.615) × (7/100)] = **0.069**

1÷R_c 1-(Fr.% ÷100) 1÷R_f Fr.% ÷100

Total U-Value

1/0.069 = 14.492

1÷Total U-Value **Total R-Value**

Reference Name: R.13.S2X4.24

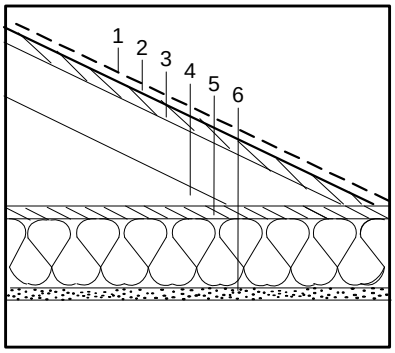

Sketch of Construction Assembly

Assembly Type: (check one)
- ___ Floor
- ___ Wall
- ✓ Ceiling/Roof

Framing Material: Metal

Framing Spacing: 24 "o.c.

Framing Size: Actual Depth 3.625; Actual Width 1.625

Cavity Insulation: R-value 13.000; Knock-out (%) 15.000; Web Thickness 0.060

Insulation Tape R-value: Interior Flange ___; Exterior Flange ___

List of Construction Components		R-Value
	Outside Surface Air Film	0.170
1.	Asphalt shingle	0.440
2.	Building paper (felt)	0.060
3.	0.50 in plywood	0.630
4.	3.50 in & greater air space; heat flow up	0.800
5.	0.75 in Polyisocyanurate	5.250
6.	0.50 in gypsum or plaster board	0.450
7.		
	Inside Surface Air Film	0.610

Calculation:

From EZFRAME = **0.066**

Total U-Value

1/0.066 = 15.100

1÷Total U-Value **Total R-Value**

Reference Name: RP.14.2x4.48

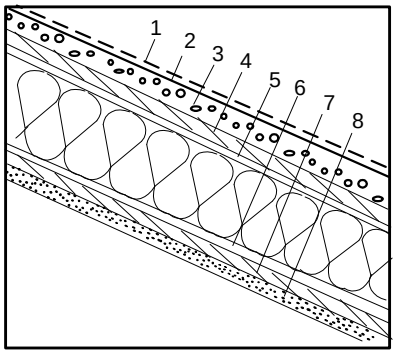

Sketch of Construction Assembly

Assembly Type: (check one)
- ____ Floor
- ____ Wall
- ✓ Ceiling/Roof

Framing Material: Wood
Framing Size: 2 × 4
Framing Spacing: 48 "o.c.
Framing Percentage: (check one)

Wall:	____	15% (16"o.c.)
	____	12% (24"o.c.)
	____	9% (48"o.c.)
Floor/Ceiling	____	10% (16"o.c.)
	____	7% (24"o.c.)
	✓	4% (48"o.c.)

Wall Weight / sf: NA
(Packages only)

List of Construction Components	R-Value Cavity (R_c)	R-Value Frame (R_f)
Outside Surface Air Film	0.170	0.170
1. Asphalt shingle roofing	0.440	0.440
2. Building paper (felt)	0.060	0.060
3. 0.375 in plywood	0.470	0.470
4. 7/8 in furring channel	0.800	0.800
5. 2X4 in fir framing	-----	3.465
6. 3 5/8 in EPS foam insulation	13.956	-----
7. 7/8 in furring channel	0.800	0.800
8. 0.375 in plywood	0.470	0.470
9. 0.50 in gypsum or plaster board	0.450	0.450
Inside Surface Air Film	0.610	0.610
Total Unadjusted R-Values:	18.226	7.735
	R_c	R_f

Framing Adjustment Calculation:

$$[(\underline{1/18.226}) \times \underline{(1\text{-}4/100)}] + [(\underline{1/7.735}) \times \underline{(4/100)}] = \mathbf{0.058}$$

($1 \div R_c$; 1-(Fr.% ÷100); $1 \div R_f$; Fr.% ÷100)

Total U-Value

$$\frac{1/0.058}{1 \div \text{Total U-Value}} = 17.288$$

Total R-Value

Reference Name: RP.14.S2x4.48

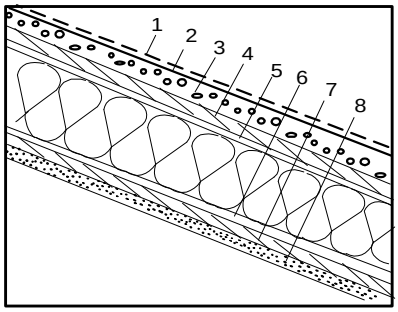

Sketch of Construction Assembly

Assembly Type: (check one)
- ____ Floor
- ____ Wall
- ✓ Ceiling/Roof

Framing Material: Metal
Framing Spacing: 48 "o.c.
Framing Size:
- Actual Depth: 3.625
- Actual Width: 1.625

Cavity Insulation:
- R-value: 14.000
- Knock-out (%): 15.000
- Web Thickness: 0.060

Insulation Tape R-value:
- Interior Flange: ____
- Exterior Flange: ____

List of Construction Components	R-Value
Outside Surface Air Film	0.170
1. Asphalt shingle	0.440
2. Building paper	0.060
3. 3/4 in polyisocyanurate	5.250
4. 3/8 in plywood	0.470
5. 7/8 in furring channel	0.800
6. 7/8 in furring channel	0.800
7. 3/8 in plywood	0.800
8. 1/2 in gypsum or plaster board	0.470
Inside Surface Air Film	0.620

Calculation:

From EZFRAME = **0.055**

Total U-Value

$$\frac{1/0.055}{1 \div \text{Total U-Value}} = 18.130$$

Total R-Value

Reference Name: R.19.2x8.16

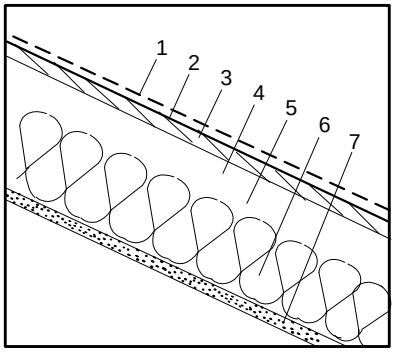

Sketch of Construction Assembly

Assembly Type: (check one) — Floor: ; Wall: ; Ceiling/Roof: ✓

Framing Material: Wood

Framing Size: 2 × 8

Framing Spacing: 16 "o.c.

Framing Percentage: (check one)

Wall:		15% (16"o.c.)
		12% (24"o.c.)
		9% (48"o.c.)
Floor/Ceiling	✓	10% (16"o.c.)
		7% (24"o.c.)
		4% (48"o.c.)

Wall Weight / sf: NA (Packages only)

List of Construction Components	Cavity (R_c)	Frame (R_f)
Outside Surface Air Film	0.170	0.170
1. Asphalt shingle roofing	0.440	0.440
2. Building paper (felt)	0.060	0.060
3. 0.50 in plywood	0.620	0.620
4. 1.0 in air space; heat flow up	0.760	-----
5. 2X8 in fir framing	-----	7.175
6. R-19 fiberglass insulation	19.000	-----
7. 0.50 in gypsum or plaster board	0.450	0.450
Inside Surface Air Film	0.610	0.610
Total Unadjusted R-Values:	22.110	9.528
	R_c	R_f

Framing Adjustment Calculation:

$$[(\underset{1\div R_c}{1/22.110}) \times (\underset{1-(Fr.\%\div 100)}{1-10/100})] + [(\underset{1\div R_f}{1/9.528}) \times (\underset{Fr.\%\div 100}{10/100})] = \boxed{0.051}$$

Total U-Value

$$\underset{1\div \text{Total U-Value}}{1/0.051} = \underset{\textbf{Total R-Value}}{19.608}$$

Reference Name: R.19.S2x8.16

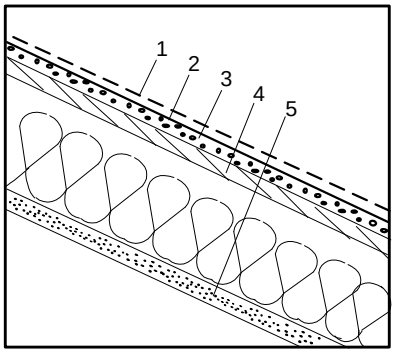

Sketch of Construction Assembly

Assembly Type: (check one) — Floor: ; Wall: ; Ceiling/Roof: ✓

Framing Material: Metal

Framing Spacing: 16 "o.c.

Framing Size: Actual Depth 8.000; Actual Width 1.625

Cavity Insulation: R-value 19.800; Knock-out (%) 15.00; Web Thickness 0.060

Insulation Tape R-value: Interior Flange ; Exterior Flange

List of Construction Components	R-Value
Outside Surface Air Film	0.170
1. Asphalt Shingle	0.440
2. Building Paper	0.060
3. 1.25 in Polyisocyanurate	8.750
4. 0.5 in plywood	0.630
5. 0.50 in Gypsum board	0.450
6.	
7.	
Inside Surface Air Film	0.620

Calculation:

From EZFRAME = **0.051**

Total U-Value

$$\underset{1\div \text{Total U-Value}}{1/0.051} = \underset{\textbf{Total R-Value}}{19.760}$$

Reference Name: R.19.2x4.24

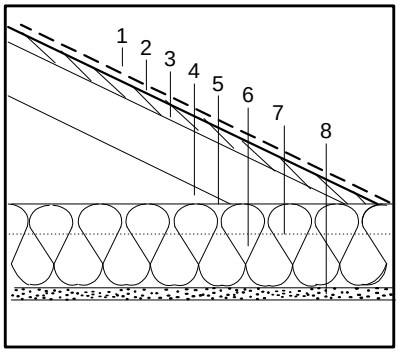

Sketch of Construction Assembly

Assembly Type: (check one)
- ____ Floor
- ____ Wall
- ✓ Ceiling/Roof

Framing Material: Wood

Framing Size: 2 × 4

Framing Spacing: 24 "o.c.

Framing Percentage: (check one)

Wall:	____	15% (16"o.c.)
	____	12% (24"o.c.)
	____	9% (48"o.c.)
Floor/Ceiling	____	10% (16"o.c.)
	✓	7% (24"o.c.)
	____	4% (48"o.c.)

Wall Weight / sf: NA
(Packages only)

List of Construction Components	Cavity (R_c)	Frame (R_f)
Outside Surface Air Film	0.170	0.170
1. 0.875 in stucco	0.440	0.440
2. Building paper (felt)	0.060	0.060
3. 0.50 in plywood	0.620	0.620
4. 3.50 in & greater air space; heat flow up	0.800	0.800
5. R-8 fiberglass insulation	8.000	8.000
6. R-11 fiberglass insulation	11.000	-----
7. 2X4 in fir framing	------	3.465
8. 0.50 in gypsum or plaster board	0.450	0.450
Inside Surface Air Film	0.610	0.610
Total Unadjusted R-Values:	22.150	14.615
	R_c	R_f

Framing Adjustment Calculation:

$$\frac{[(1/22.15)}{1\div R_c} \times \frac{(1-7/100)]}{1-(Fr.\%\div 100)} + \frac{[(1/14.615)}{1\div R_f} \times \frac{(7/100)]}{Fr.\%\div 100} = \textbf{0.047}$$

Total U-Value

$$\frac{1/0.047}{1\div \text{Total U-Value}} = \frac{21.277}{\textbf{Total R-Value}}$$

Reference Name: R.19.S2x4.24

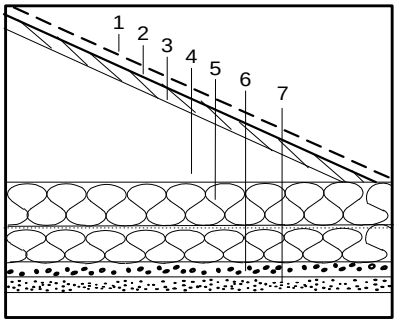

Sketch of Construction Assembly

Assembly Type: (check one)
- ____ Floor
- ____ Wall
- ✓ Ceiling/Roof

Framing Material: Metal

Framing Spacing: 24 "o.c.

Framing Size:
- Actual Depth: 3.625
- Actual Width: 1.625

Cavity Insulation:
- R-value: 11.000
- Knock-out (%): 15.000
- Web Thickness: 0.060

Insulation Tape R-value:
- Interior Flange: ____
- Exterior Flange: ____

List of Construction Components	R-Value
Outside Surface Air Film	0.170
1. Asphalt Roofing	0.150
2. Building paper (felt)	0.060
3. 0.625 in Plywood	0.780
4. 3.5 in Air, Ceiling	0.800
5. R-8 fiberglass insulation	8.000
6. 3/4 in polyisocyanurate	5.250
7. 0.50 in Gypsum board	0.450
Inside Surface Air Film	0.610

Calculation:

From EZFRAME = **0.044**

Total U-Value

$$\frac{1/0.044}{1\div \text{Total U-Value}} = \frac{22.670}{\textbf{Total R-Value}}$$

Reference Name: R.22.2x10.16

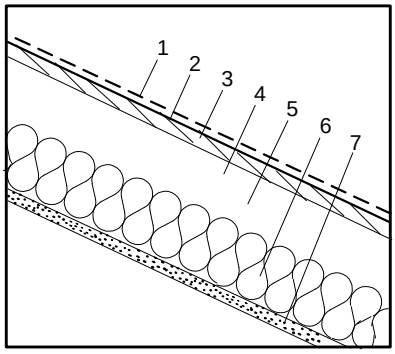

Sketch of Construction Assembly

Assembly Type: (check one)
- ___ Floor
- ___ Wall
- ✓ Ceiling/Roof

Framing Material: Wood

Framing Size: 2 × 10

Framing Spacing: 16 "o.c.

Framing Percentage: (check one)

Wall:	___	15% (16"o.c.)
	___	12% (24"o.c.)
	___	9% (48"o.c.)
Floor/Ceiling	✓	10% (16"o.c.)
	___	7% (24"o.c.)
	___	4% (48"o.c.)

Wall Weight / sf: (Packages only) NA

List of Construction Components		R-Value Cavity (R_c)	R-Value Frame (R_f)
	Outside Surface Air Film	0.170	0.170
1.	0.875 in stucco	0.440	0.440
2.	Building paper (felt)	0.060	0.060
3.	3.5" & greater air space; heat sidways	0.620	0.620
4.	2x4 in fir framing	0.790	-----
5.	0.50 in gypsum or plaster board	-----	9.158
6.		22.000	-----
7.		0.450	0.450
	Inside Surface Air Film	0.610	0.610
	Total Unadjusted R-Values:	25.140	11.058
		R_c	R_f

Framing Adjustment Calculation:

$$[(\underset{1\div R_c}{1/25.14}) \times (\underset{1-(Fr.\%\div 100)}{1-10/100})] + [(\underset{1\div R_f}{1/11.058}) \times (\underset{Fr.\%\div 100}{10/100})] = \boxed{0.045}$$

Total U-Value

$$\underset{1\div \text{Total U-Value}}{1/0.045} = 22.22$$

Total R-Value

Reference Name: R.22.S2x10.16

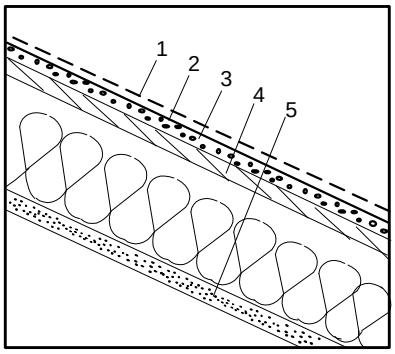

Sketch of Construction Assembly

Assembly Type: (check one)
- ___ Floor
- ___ Wall
- ✓ Ceiling/Roof

Framing Material: Metal

Framing Spacing: 16 "o.c.

Framing Size:

Actual Depth	10.000
Actual Width	1.625

Cavity Insulation:

R-value	22.800
Knock-out (%)	15.000
Web Thickness	0.060

Insulation Tape R-value:

Interior Flange	
Exterior Flange	

List of Construction Components		R-Value
	Outside Surface Air Film	0.170
1.	Asphalt Paper	0.440
2.	Building paper (felt)	0.060
3.	1.50 in polyisocyanurate	10.500
4.	0.50 in Plywood	0.630
5.	0.50 in gypsum or plaster board	0.450
6.		
7.		
	Inside Surface Air Film	0.620

Calculation:

From EZFRAME = **0.044**

Total U-Value

$$\underset{1\div \text{Total U-Value}}{1/0.044} = 22.660$$

Total R-Value

Reference Name: R.22.2x4.24

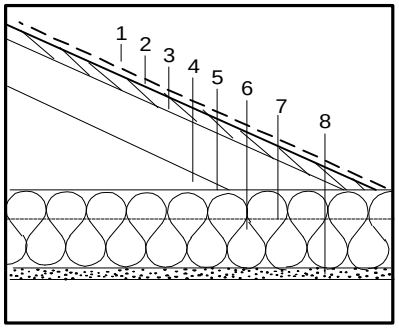

Sketch of Construction Assembly

Assembly Type: (check one)
- ____ Floor
- ____ Wall
- ✓ Ceiling/Roof

Framing Material: Wood

Framing Size: 2 × 4

Framing Spacing: 24 "o.c.

Framing Percentage: (check one)

Wall:	____	15% (16"o.c.)
	____	12% (24"o.c.)
	____	9% (48"o.c.)
Floor/Ceiling	____	10% (16"o.c.)
	✓	7% (24"o.c.)
	____	4% (48"o.c.)

Wall Weight / sf: (Packages only) NA

List of Construction Components	R-Value Cavity (R_c)	R-Value Frame (R_f)
Outside Surface Air Film	0.170	0.170
1. Asphalt shingle rofing	0.440	0.440
2. Building paper (felt)	0.060	0.060
3. 0.50 in plywood	0.620	0.620
4. 3.50 in & greater air space	0.800	0.800
5. R-11 fiberglass insulation	11.000	11.000
6. R-11 fiberglass insulation	11.000	-----
7. 2X4 in fir framing	-----	3.465
8. 0.50 in gypsum or plaster board	0.450	0.450
Inside Surface Air Film	0.610	0.610
Total Unadjusted R-Values:	25.150	17.615
	R_c	R_f

Framing Adjustment Calculation:

$$[(\frac{1/25.15}{1\div R_c}) \times (\frac{1-7/100}{1-(Fr.\%\div 100)})] + [(\frac{1/17.615}{1\div R_f}) \times (\frac{7/100}{Fr.\%\div 100})] = \textbf{0.041}$$

Total U-Value

$$\frac{1/0.041}{1\div \text{Total U-Value}} = 24.390$$

Total R-Value

Reference Name: R.22.S2x4.24

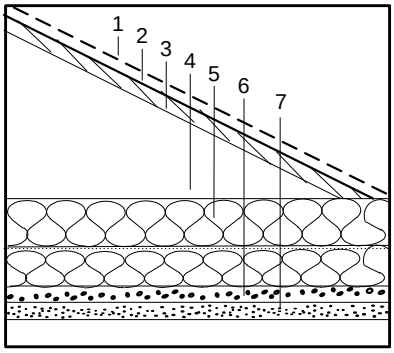

Sketch of Construction Assembly

Assembly Type: (check one)
- ____ Floor
- ____ Wall
- ✓ Ceiling/Roof

Framing Material: Metal

Framing Spacing: 24 "o.c.

Framing Size:
- Actual Depth: 3.625
- Actual Width: 1.625

Cavity Insulation:
- R-value: 11.000
- Knock-out (%): 15.000
- Web Thickness: 0.060

Insulation Tape R-value:
- Interior Flange:
- Exterior Flange:

List of Construction Components	R-Value
Outside Surface Air Film	0.170
1. Asphalt shingle rofing	0.440
2. Building paper (felt)	0.060
3. 0.50 in plywood	0.630
4. 3.50 in & greater air space	0.800
5. R-11 fiberglass insulation	11.000
6. 0.75 in Polyisocyanurate	5.250
7. 0.50 in Gypsum Board	0.450
Inside Surface Air Film	0.610

Calculation:

From EZFRAME = **0.039**

Total U-Value

$$\frac{1/0.039}{1\div \text{Total U-Value}} = 25.500$$

Total R-Value

Reference Name: RP.22.2x6.48

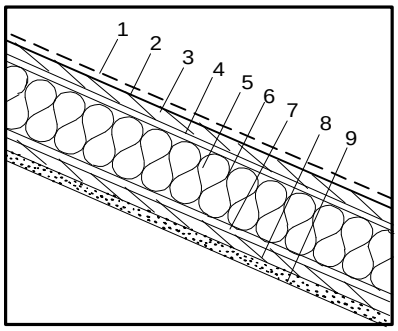

Sketch of Construction Assembly

Assembly Type: (check one)
- ____ Floor
- ____ Wall
- ✓ Ceiling/Roof

Framing Material: Wood

Framing Size: 2 × 6

Framing Spacing: 48 "o.c.

Framing Percentage: (check one)

Wall:	____	15% (16"o.c.)
	____	12% (24"o.c.)
	____	9% (48"o.c.)
Floor/Ceiling	____	10% (16"o.c.)
	____	7% (24"o.c.)
	✓	4% (48"o.c.)

Wall Weight / sf: (Packages only) NA

List of Construction Components	Cavity (R_c)	Frame (R_f)
Outside Surface Air Film	0.170	0.170
1. Asphalt shingle roofing	0.440	0.440
2. Building paper (felt)	0.060	0.060
3. 0.375 in plywood	0.470	0.800
4. 0.875 in furring channel	0.800	0.800
5. 5 5/8 in EPS foam insulation	21.656	-----
6. 2X6 in fir framing	-----	5.445
7. 0.875 in furring channel	0.800	0.800
8. 0.375 in plywood	0.470	0.470
9. 0.50 in gypsum or plaster board	0.450	0.450
Inside Surface Air Film	0.610	0.610
Total Unadjusted R-Values:	25.926	10.045
	R_c	R_f

Framing Adjustment Calculation:

$$[(\underset{1\div R_c}{\frac{1}{25.926}}) \times (\underset{1-(Fr.\%\div 100)}{\frac{1-4}{100}})] + [(\underset{1\div R_f}{\frac{1}{10.045}}) \times (\underset{Fr.\%\div 100}{\frac{4}{100}})] = \mathbf{0.041}$$

Total U-Value

$$\underset{1\div \text{Total U-Value}}{\frac{1}{0.041}} = 24.384$$

Total R-Value

Reference Name: RP.22.S2x6.48

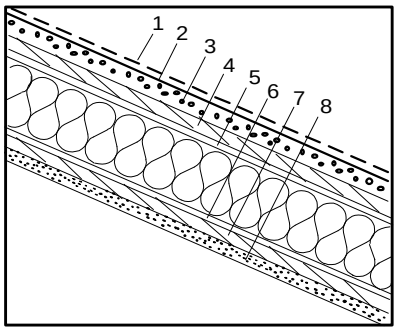

Sketch of Construction Assembly

Assembly Type: (check one)
- ____ Floor
- ____ Wall
- ✓ Ceiling/Roof

Framing Material: Metal

Framing Spacing: 48 "o.c.

Framing Size:

Actual Depth	6.000
Actual Width	1.625

Cavity Insulation:

R-value	22.000
Knock-out (%)	15.000
Web Thickness	0.060

Insulation Tape R-value:

Interior Flange	
Exterior Flange	

List of Construction Components	R-Value
Outside Surface Air Film	0.170
1. Asphalt Shingle	0.440
2. Building paper (felt)	0.060
3. 1.00 in polyisocyanurate	7.000
4. 0.375 in Plywood	0.470
5. 0.875 in furring channel	0.800
6. 0.875 in furring channel	0.800
7. 0.375 in Plywood	0.470
8. 0.50 in gypsum or plaster board	0.450
Inside Surface Air Film	0.620

Calculation:

From EZFRAME = **0.039**

Total U-Value

$$\underset{1\div \text{Total U-Value}}{\frac{1}{0.039}} = 25.460$$

Total R-Value

Reference Name: RP.28.2x8.48

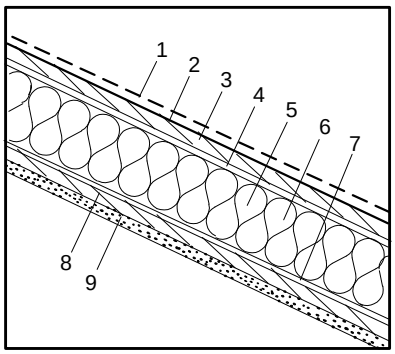

Sketch of Construction Assembly

Assembly Type: (check one) ____ Floor; ____ Wall; ✓ Ceiling/Roof

Framing Material: Wood

Framing Size: 2 × 8

Framing Spacing: 48 "o.c.

Framing Percentage: (check one)

Wall:	____	15% (16"o.c.)
	____	12% (24"o.c.)
	____	9% (48"o.c.)
Floor/Ceiling	____	10% (16"o.c.)
	____	7% (24"o.c.)
	✓	4% (48"o.c.)

Wall Weight / sf: NA (Packages only)

List of Construction Components	R-Value Cavity (R_c)	R-Value Frame (R_f)
Outside Surface Air Film	0.170	0.170
1. Asphalt shingle roofing	0.440	0.440
2. Building paper (felt)	0.060	0.060
3. 0.375 in plywood	0.470	0.470
4. 0.875 in furring channel	0.800	0.800
5. 7 3/8 in EPS foam insulation @ R-3.85/in	28.394	-----
6. 2X8 in fir framing	-----	7.178
7. 0.875 in furring channel	0.800	0.800
8. 0.375 in plywood	0.470	0.470
9. 0.50 in gypsum or plaster board	0.450	0.450
Inside Surface Air Film	0.610	0.610
Total Unadjusted R-Values:	32.664	11.448
	R_c	R_f

Framing Adjustment Calculation:

$$[(\underline{1}/32.664) \times (\underline{1-4}/100)] + [(\underline{1}/11.448) \times (\underline{4}/100)] = \mathbf{0.033}$$

($1 \div R_c$; 1-(Fr.% ÷100); $1 \div R_f$; Fr.% ÷100)

Total U-Value

$$\frac{1}{0.033} = 30.410$$

(1 ÷ Total U-Value)

Total R-Value

Reference Name: RP.28.S2x8.48

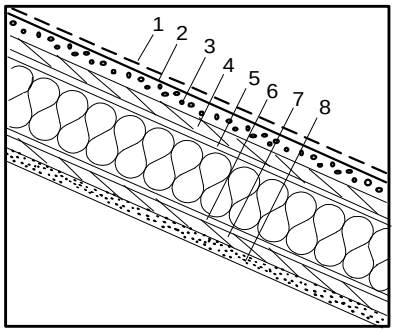

Sketch of Construction Assembly

Assembly Type: (check one) ____ Floor; ____ Wall; ✓ Ceiling/Roof

Framing Material: Metal

Framing Spacing: 48 "o.c.

Framing Size:

Actual Depth	8.000
Actual Width	1.625

Cavity Insulation:

R-value	28.394
Knock-out (%)	15.000
Web Thickness	0.060

Insulation Tape R-value:

Interior Flange	
Exterior Flange	

List of Construction Components	R-Value
Outside Surface Air Film	0.170
1. Asphalt Shingle	0.440
2. Building paper (felt)	0.060
3. 1.75 in polyisocyanurate	12.250
4. 0.375 in Plywood	0.470
5. 0.875 in furring channel	0.800
6. 0.875 in furring channel	0.800
7. 0.375 in Plywood	0.470
8. 0.50 in gypsum or plaster board	0.450
Inside Surface Air Film	0.620

Calculation:

From EZFRAME = **0.031**

Total U-Value

$$\frac{1}{0.031} = 31.940$$

(1 ÷ Total U-Value)

Total R-Value

Reference Name: R.30.2x12.16

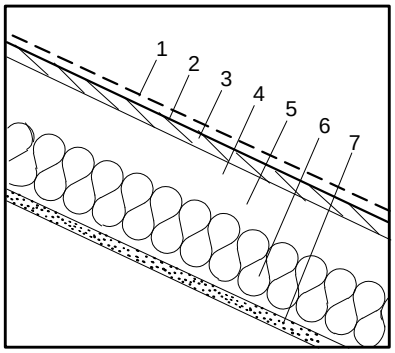

Sketch of Construction Assembly

Assembly Type: (check one)
- ____ Floor
- ____ Wall
- ✓ Ceiling/Roof

Framing Material: Wood

Framing Size: 2 × 12

Framing Spacing: 16 "o.c.

Framing Percentage: (check one)

Wall:	____	15% (16"o.c.)
	____	12% (24"o.c.)
	____	9% (48"o.c.)
Floor/Ceiling	✓	10% (16"o.c.)
	____	7% (24"o.c.)
	____	4% (48"o.c.)

Wall Weight / sf: (Packages only) NA

List of Construction Components	Cavity (R_c)	Frame (R_f)
Outside Surface Air Film	0.170	0.170
1. Asphalt shingle roofing	0.440	0.440
2. Building paper (felt)	0.060	0.060
3. 0.50 in plywood	0.620	0.620
4. 1.75 in air space; heat fow up	0.780	-----
5. 2X12 in fir framing	-----	11.138
6. R-30 fiberglass insulation	30.000	-----
7. 0.50 in gypsum or plaster board	0.450	0.450
Inside Surface Air Film	0.610	0.610
Total Unadjusted R-Values:	33.130	13.488
	R_c	R_f

Framing Adjustment Calculation:

$$[(\frac{1}{1\div R_c}) \times (\frac{1-10/100}{1-(Fr.\%\div 100)})] + [(\frac{1}{1\div R_f}) \times (\frac{10/100}{Fr.\%\div 100})] = \frac{1}{1\div \text{Total U-Value}}$$

$$[(\frac{1}{33.130}) \times (\frac{1-10/100}{1-(Fr.\%\div 100)})] + [(\frac{1}{13.488}) \times (\frac{10/100}{Fr.\%\div 100})] = \frac{1}{1\div 0.034}$$

0.034 **Total U-Value**

29.412 **Total R-Value**

Reference Name: R.30.S2x12.16

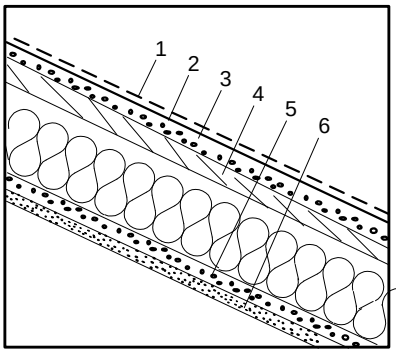

Sketch of Construction Assembly

Assembly Type: (check one)
- ____ Floor
- ____ Wall
- ✓ Ceiling/Roof

Framing Material: Metal

Framing Spacing: 16 "o.c.

Framing Size:
- Actual Depth: 12.00
- Actual Width: 1.625

Cavity Insulation:
- R-value: 30.8
- Knock-out (%): 15.00
- Web Thickness: 0.060

Insulation Tape R-value:
- Interior Flange: ____
- Exterior Flange: ____

List of Construction Components	R-Value
Outside Surface Air Film	0.170
1. Asphalt shingle	0.440
2. Building Paper	0.060
3. 1.50 in Polyisocyanurate	10.50
4. 0.50 in plywood	0.62
5. 1.00 in Polyisocyanurate	7.00
6. 0.50 in gypsum or plaster board	0.45
7.	
Inside Surface Air Film	0.620

Calculation:

From EZFRAME = **0.032** **Total U-Value**

$$\frac{1}{1\div \text{Total U-Value}} = \frac{1}{1\div 0.032}$$

31.64 **Total R-Value**

Reference Name: R.30.2x10.16

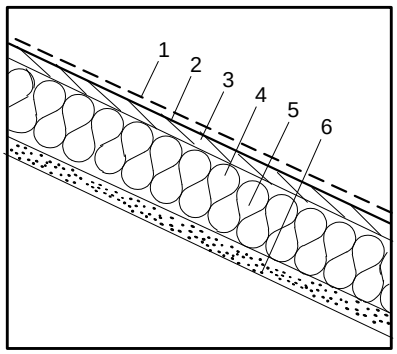

Sketch of Construction Assembly

Assembly Type: (check one)
- ___ Floor
- ___ Wall
- ✓ Ceiling/Roof

Framing Material: Wood

Framing Size: 2 × 10

Framing Spacing: 16 "o.c.

Framing Percentage: (check one)

Wall:	___	15% (16"o.c.)
	___	12% (24"o.c.)
	___	9% (48"o.c.)
Floor/Ceiling	✓	10% (16"o.c.)
	___	7% (24"o.c.)
	___	4% (48"o.c.)

Wall Weight / sf: (Packages only) NA

List of Construction Components		R-Value Cavity (R_c)	R-Value Frame (R_f)
	Outside Surface Air Film	0.170	0.170
1.	Asphalt shingle roofing	0.440	0.440
2.	Building paper (felt)	0.060	0.060
3.	0.50 in plywood	0.620	0.620
4.	2x10 in fir framing	-----	9.158
5.	R-30c fiberglass insulation (8.5'' thkns)	30.000	-----
6.	0.50 in gypsum or plaster board	0.450	0.450
7.			
	Inside Surface Air Film	0.610	0.610
	Total Unadjusted R-Values:	32.350	11.508
		R_c	R_f

Framing Adjustment Calculation:

[(1/32.350) × (1-10/100)] + [(1/11.508) × (10/100)] = **0.036**

1÷R_c 1-(Fr.% ÷100) 1÷R_f Fr.% ÷100

Total U-Value

1/0.036 (1÷Total U-Value) = 27.778 **Total R-Value**

Reference Name: R.30.S2x10.16

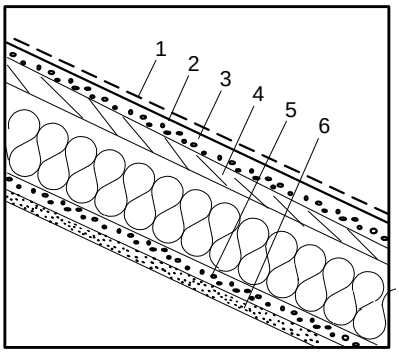

Sketch of Construction Assembly

Assembly Type: (check one)
- ___ Floor
- ___ Wall
- ✓ Ceiling/Roof

Framing Material: Metal

Framing Spacing: 16 "o.c.

Framing Size:

Actual Depth	10.00
Actual Width	1.625

Cavity Insulation:

R-value	30.80
Knock-out (%)	15.00
Web Thickness	0.060

Insulation Tape R-value:

Interior Flange	
Exterior Flange	

List of Construction Components		R-Value
	Outside Surface Air Film	0.170
1.	Asphalt shingle	0.440
2.	Building Paper	0.060
3.	1.50 in Polyisocyanurate	10.50
4.	0.50 in plywood	0.62
5.	0.75 in Polyisocyanurate	5.25
6.	0.50 in gypsum or plaster board	0.45
7.		
	Inside Surface Air Film	0.620

Calculation:

From EZFRAME = **0.034**

Total U-Value

1/0.034 (1÷Total U-Value) = 29.220 **Total R-Value**

Reference Name: R.30.2x4.24

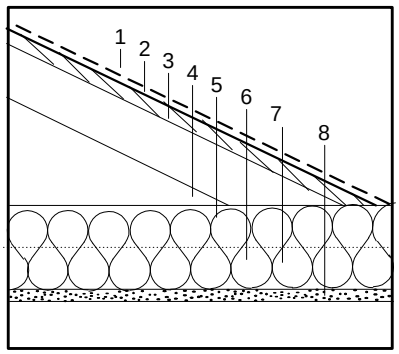

Sketch of Construction Assembly

Assembly Type: (check one)
- ____ Floor
- ____ Wall
- ✓ Ceiling/Roof

Framing Material: Wood

Framing Size: 2 × 4

Framing Spacing: 24 "o.c.

Framing Percentage: (check one)

Wall:	____	15% (16"o.c.)
	____	12% (24"o.c.)
	____	9% (48"o.c.)
Floor/Ceiling	____	10% (16"o.c.)
	✓	7% (24"o.c.)
	____	4% (48"o.c.)

Wall Weight / sf: (Packages only) NA

List of Construction Components	R-Value Cavity (R_c)	R-Value Frame (R_f)
Outside Surface Air Film	0.170	0.170
1. Asphalt shingle roofing	0.440	0.440
2. Building paper (felt)	0.060	0.060
3. 0.50 in plywood	0.620	0.620
4. 3.50 in & greater air space	0.800	0.800
5. R-19 fiberglass insulation	19.000	19.000
6. R-11 fiberglass insulation	11.000	-----
7. 2X4 in fir framing	-----	3.465
8. 0.50 in gypsum or plaster board	0.450	0.450
Inside Surface Air Film	0.610	0.610
Total Unadjusted R-Values:	33.150	25.615
	R_c	R_f

Framing Adjustment Calculation:

$$\left[\left(\frac{1}{33.150}\right)_{1\div R_c} \times \left(\frac{1-7/100}{1-(\text{Fr.}\%\div 100)}\right)\right] + \left[\left(\frac{1}{25.615}\right)_{1\div R_f} \times \left(\frac{7}{100}\right)_{\text{Fr.}\%\div 100}\right] = \mathbf{0.031}$$

Total U-Value

$$\frac{1}{0.031}_{1\div\text{Total U-Value}} = \mathbf{32.481}$$

Total R-Value

Reference Name: R.30.S2x4.24

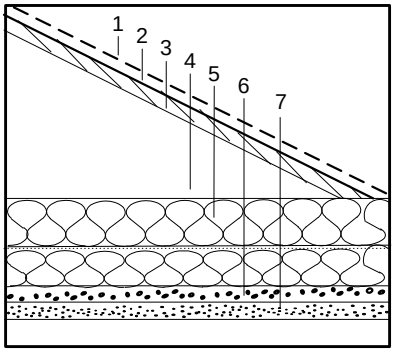

Sketch of Construction Assembly

Assembly Type: (check one)
- ____ Floor
- ____ Wall
- ✓ Ceiling/Roof

Framing Material: Metal

Framing Spacing: 24 "o.c.

Framing Size:

Actual Depth	3.625
Actual Width	1.625

Cavity Insulation:

R-value	11.00
Knock-out (%)	15.00
Web Thickness	0.060

Insulation Tape R-value:

Interior Flange	
Exterior Flange	

List of Construction Components	R-Value
Outside Surface Air Film	0.170
1. Asphalt shingle rofing	0.440
2. Building paper (felt)	0.060
3. 0.50 in plywood	0.630
4. 3.50 in & greater air space	0.800
5. R-19 fiberglass insulation	19.000
6. 0.75 in Polyisocyanurate	5.250
7. 0.50 in Gypsum Board	0.450
Inside Surface Air Film	0.680

Calculation:

From EZFRAME = **0.030**

Total U-Value

$$\frac{1}{0.030}_{1\div\text{Total U-Value}} = \mathbf{33.52}$$

Total R-Value

Reference Name: RP.35.2x10.48

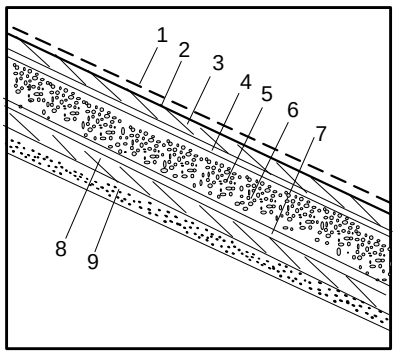

Sketch of Construction Assembly

Assembly Type: (check one)
- ____ Floor
- ____ Wall
- ✓ Ceiling/Roof

Framing Material: Wood

Framing Size: 2 × 10

Framing Spacing: 48 "o.c.

Framing Percentage: (check one)

Wall:	____	15% (16"o.c.)
	____	12% (24"o.c.)
	____	9% (48"o.c.)
Floor/Ceiling	____	10% (16"o.c.)
	____	7% (24"o.c.)
	✓	4% (48"o.c.)

Wall Weight / sf: NA
(Packages only)

List of Construction Components	R-Value Cavity (R_c)	R-Value Frame (R_f)
Outside Surface Air Film	0.170	0.170
1. Asphalt shingle roofing	0.440	0.440
2. Building paper (felt)	0.060	0.060
3. 0.375 in plywood	0.470	0.470
4. 0.875 furring channel	0.800	0.800
5. 4 in EPS foam insulation	35.000	-----
6. 2x10 in fir framing	-----	9.158
7. 0.875 furring channel	0.800	0.800
8. 0.375 in plywood	0.470	0.470
9. 0.50 in gypsum or plaster board	0.450	0.450
Inside Surface Air Film	0.610	0.610
Total Unadjusted R-Values:	39.270	13.426
	R_c	R_f

Framing Adjustment Calculation:

$$[(\tfrac{1/39.270}{1\div R_c}) \times (\tfrac{1-4/100}{1-(Fr.\%\div 100)})] + [(\tfrac{1/13.426}{1\div R_f}) \times (\tfrac{4/100}{Fr.\%\div 100})] = \mathbf{0.027}$$

Total U-Value

$$\frac{1/0.027}{1\div \text{Total U-Value}} = 37.037$$

Total R-Value

Reference Name: RP.35.S2x10.48

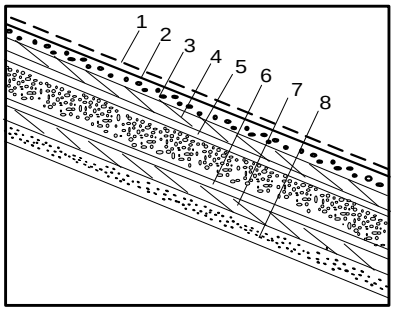

Sketch of Construction Assembly

Assembly Type: (check one)
- ____ Floor
- ____ Wall
- ✓ Ceiling/Roof

Framing Material: Metal

Framing Spacing: 48 "o.c.

Framing Size:

Actual Depth	10.000
Actual Width	1.625

Cavity Insulation:

R-value	35.000
Knock-out (%)	15.000
Web Thickness	0.060

Insulation Tape R-value:

Interior Flange	
Exterior Flange	

List of Construction Components	R-Value
Outside Surface Air Film	0.170
1. Asphalt shingle roofing	0.440
2. Building paper (felt)	0.060
3. 2.25 in polyisocyanurate	15.750
4. 0.375 in plywood	0.470
5. 0.875 in furring channel	0.800
6. 0.875 in furring channel	0.800
7. 0.375 in plywood	0.470
8. 0.50 in gypsum or plaster board	0.450
Inside Surface Air Film	0.680

Calculation:

From EZFRAME = **0.026**

Total U-Value

$$\frac{1/0.026}{1\div \text{Total U-Value}} = 38.44$$

Total R-Value

Reference Name: R.38.2x14.16

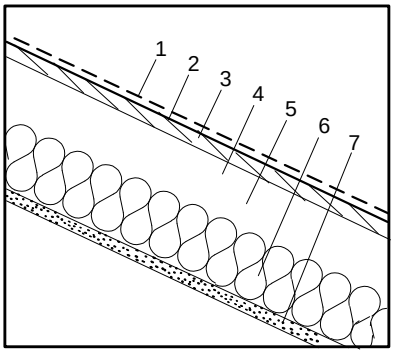

Sketch of Construction Assembly

Assembly Type: (check one)
- ___ Floor
- ___ Wall
- ✓ Ceiling/Roof

Framing Material: Wood

Framing Size: 2 × 14

Framing Spacing: 16 "o.c.

Framing Percentage: (check one)

Wall:	___	15% (16"o.c.)
	___	12% (24"o.c.)
	___	9% (48"o.c.)
Floor/Ceiling	✓	10% (16"o.c.)
	___	7% (24"o.c.)
	___	4% (48"o.c.)

Wall Weight / sf: (Packages only) NA

List of Construction Components		R-Value Cavity (R_c)	R-Value Frame (R_f)
	Outside Surface Air Film	0.170	0.170
1.	Asphalt shingle roofing	0.440	0.440
2.	Building paper (felt)	0.060	0.060
3.	0.50 in plywood	0.620	0.620
4.	1.25 in air space; heat flow up	0.760	-----
5.	2X14 in fir framing	-----	13.118
6.	R-38 fiberglass insulation	38.000	-----
7.	0.50 in gypsum or plaster board	0.450	0.450
	Inside Surface Air Film	0.610	0.610
	Total Unadjusted R-Values:	41.110	15.468
		R_c	R_f

Framing Adjustment Calculation:

$$[(\underset{1\div R_c}{1/41.110}) \times (\underset{1-(Fr.\%\div 100)}{1-10/100})] + [(\underset{1\div R_f}{1/15.468}) \times (\underset{Fr.\%\div 100}{10/100})] = \boxed{0.028}$$

Total U-Value

$$\underset{1\div \text{Total U-Value}}{1/0.028} = \underset{\textbf{Total R-Value}}{35.714}$$

Reference Name: R.38.S2x14.16

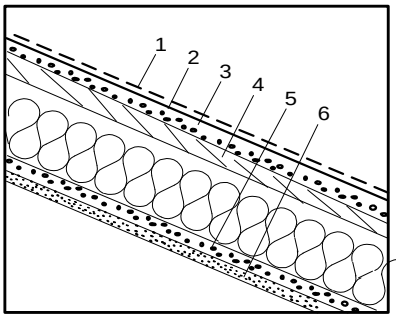

Sketch of Construction Assembly

Assembly Type: (check one)
- ___ Floor
- ___ Wall
- ✓ Ceiling/Roof

Framing Material: Metal

Framing Spacing: 16 "o.c.

Framing Size:
- Actual Depth 14.000
- Actual Width 1.625

Cavity Insulation:
- R-value 38.800
- Knock-out (%) 15.00
- Web Thickness 0.060

Insulation Tape R-value:
- Interior Flange ___
- Exterior Flange ___

List of Construction Components		R-Value
	Outside Surface Air Film	0.170
1.	Asphalt Shingle	0.440
2.	Building paper (felt)	0.060
3.	1.50 in Polyisocyanurate	10.500
4.	0.50 in Plywood	0.630
5.	1.50 in Polyisocyanurate	10.500
6.	0.50 in gypsum or plaster board	0.450
7.		
	Inside Surface Air Film	0.620

Calculation:

From EZFRAME = **0.027**

Total U-Value

$$\underset{1\div \text{Total U-Value}}{1/0.027} = \underset{\textbf{Total R-Value}}{36.95}$$

Reference Name: R.38.2x12.16

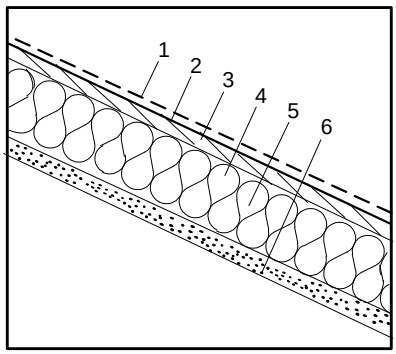

Sketch of Construction Assembly

Assembly Type: (check one)
- ____ Floor
- ____ Wall
- ✓ Ceiling/Roof

Framing Material: Wood

Framing Size: 2 × 12

Framing Spacing: 16 "o.c.

Framing Percentage: (check one)

Wall:	____	15% (16"o.c.)
	____	12% (24"o.c.)
	____	9% (48"o.c.)
Floor/Ceiling	✓	10% (16"o.c.)
	____	7% (24"o.c.)
	____	4% (48"o.c.)

Wall Weight / sf: NA (Packages only)

List of Construction Components	R-Value Cavity (R_c)	R-Value Frame (R_f)
Outside Surface Air Film	0.170	0.170
1. Asphalt shingle roofing	0.440	0.440
2. Building paper (felt)	0.060	0.060
3. 0.50 in plywood	0.620	0.620
4. 2X12 in fir framing	-----	11.138
5. R-38 fiberglass insulation	37.000	-----
6. 0.50 in gypsum or plaster board	0.450	0.450
7.		
Inside Surface Air Film	0.610	0.610
Total Unadjusted R-Values:	39.350	13.488
	R_c	R_f

Framing Adjustment Calculation:

$$[(\underline{1/39.350}) \times (\underline{1\text{-}10/100})] + [(\underline{1/13.488}) \times (\underline{10/100})] = \mathbf{0.030}$$

($1 \div R_c$; 1-(Fr.% ÷100); $1 \div R_f$; Fr.% ÷100)

Total U-Value

$$\frac{1/0.030}{1 \div \text{Total U-Value}} = \underline{33.333}$$

Total R-Value

Reference Name: R.38.S2x12.16

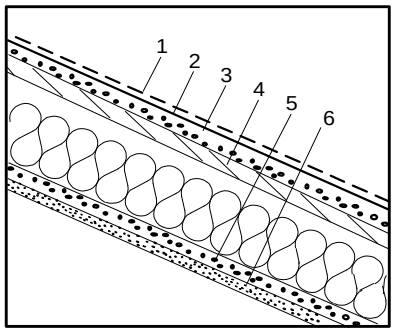

Sketch of Construction Assembly

Assembly Type: (check one)
- ____ Floor
- ____ Wall
- ✓ Ceiling/Roof

Framing Material: Metal

Framing Spacing: 16 "o.c.

Framing Size:

Actual Depth	12.000
Actual Width	1.625

Cavity Insulation:

R-value	38.800
Knock-out (%)	15.000
Web Thickness	0.060

Insulation Tape R-value:

Interior Flange	
Exterior Flange	

List of Construction Components	R-Value
Outside Surface Air Film	0.170
1. Asphalt Shingle	0.440
2. Building paper (felt)	0.060
3. 1.50 in polyisocyanurate	10.50
4. 0.625 in plywood	0.780
5. 1.00 in polyisocyanurate	7.00
6. 0.625 in gypsum or plaster board	0.560
7.	
Inside Surface Air Film	0.620

Calculation:

From EZFRAME = **0.030**

Total U-Value

$$\frac{1/0.030}{1 \div \text{Total U-Value}} = \underline{33.38}$$

Total R-Value

Reference Name: R.38.2x4.24

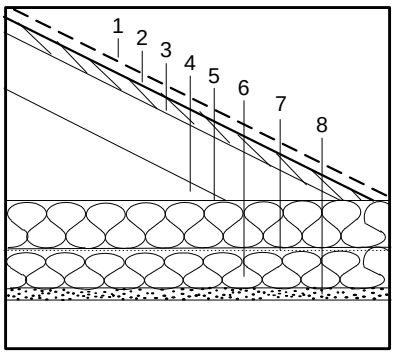

Sketch of Construction Assembly

Assembly Type: (check one)
- ___ Floor
- ___ Wall
- ✓ Ceiling/Roof

Framing Material: Wood

Framing Size: 2 × 4

Framing Spacing: 24 "o.c.

Framing Percentage: (check one)

Wall:	___	15% (16"o.c.)
	___	12% (24"o.c.)
	___	9% (48"o.c.)
Floor/Ceiling	___	10% (16"o.c.)
	✓	7% (24"o.c.)
	___	4% (48"o.c.)

Wall Weight / sf: (Packages only) NA

List of Construction Components		R-Value Cavity (R_c)	R-Value Frame (R_f)
	Outside Surface Air Film	0.170	0.170
1.	Asphalt shingle roofing	0.440	0.440
2.	Building paper (felt)	0.060	0.060
3.	0.50 in plywood	0.620	0.620
4.	3.50 in & greater air space; heat flow up	0.800	0.800
5.	R-27 fiberglass insulation	27.000	27.000
6.	R-11 fiberglass insulation	11.000	-----
7.	2X4 in fir framing	-----	3.465
8.	0.50 in gypsum or plaster board	0.450	0.450
	Inside Surface Air Film	0.610	0.610
	Total Unadjusted R-Values:	41.150	33.615
		R_c	R_f

Framing Adjustment Calculation:

$$[(\underset{1\div R_c}{1/41.150}) \times (\underset{1-(Fr.\%\div 100)}{1-7/100})] + [(\underset{1\div R_f}{1/33.615}) \times (\underset{Fr.\%\div 100}{7/100})] = \boxed{0.024}$$

Total U-Value

$$\underset{1\div \text{Total U-Value}}{1/0.024} = 41.667$$

Total R-Value

Reference Name: R.38.S2x4.24

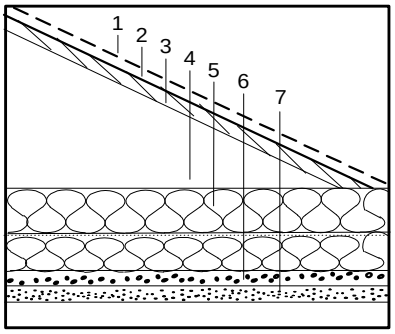

Sketch of Construction Assembly

Assembly Type: (check one)
- ___ Floor
- ___ Wall
- ✓ Ceiling/Roof

Framing Material: Metal

Framing Spacing: 24 "o.c.

Framing Size: Actual Depth 3.625; Actual Width 1.625

Cavity Insulation: R-value 11.00; Knock-out (%) 15.000; Web Thickness 0.060

Insulation Tape R-value: Interior Flange ___; Exterior Flange ___

List of Construction Components		R-Value
	Outside Surface Air Film	0.170
1.	Asphalt Shingle	0.440
2.	Building paper (felt)	0.060
3.	0.50 in Plywood	0.630
4.	3.50 in & greater air space; heat flow up	0.800
5.	R-27 fiberglass insulation	27.00
6.	1.00 in polyisocyanurate	7.00
7.	0.50 in gypsum or plaster board	0.450
	Inside Surface Air Film	0.610

Calculation:

From EZFRAME = **0.023**

Total U-Value

$$\underset{1\div \text{Total U-Value}}{1/0.023} = 43.25$$

Total R-Value

Reference Name: R.49.2x4.16

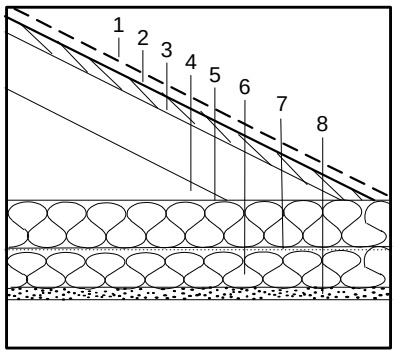

Sketch of Construction Assembly

Assembly Type: (check one)
- ___ Floor
- ___ Wall
- ✓ Ceiling/Roof

Framing Material: Wood

Framing Size: 2 × 4

Framing Spacing: 16 "o.c.

Framing Percentage: (check one)

Wall:	___	15% (16"o.c.)
	___	12% (24"o.c.)
	___	9% (48"o.c.)
Floor/Ceiling	✓	10% (16"o.c.)
	___	7% (24"o.c.)
	___	4% (48"o.c.)

Wall Weight / sf: (Packages only) NA

List of Construction Components		R-Value Cavity (R_c)	R-Value Frame (R_f)
	Outside Surface Air Film	0.170	0.170
1.	Asphalt shingle roofing	0.440	0.440
2.	Building paper (felt)	0.060	0.060
3.	0.50 in plywood	0.620	0.620
4.	3.50 in & greater air space; heat flow up	0.800	0.800
5.	R-38 fiberglass insulation	38.000	38.000
6.	R-11 fiberglass insulation	11.000	-----
7.	2X4 in fir framing	-----	3.465
8.	0.50 in gypsum or plaster board	0.450	0.450
	Inside Surface Air Film	0.610	0.610
	Total Unadjusted R-Values:	52.150	44.615
		R_c	R_f

Framing Adjustment Calculation:

$$[(\underset{1\div R_c}{1/52.150}) \times (\underset{1-(Fr.\%\div 100)}{1-10/100})] + [(\underset{1\div R_f}{1/44.615}) \times (\underset{Fr.\%\div 100}{10/100})] = \boxed{0.019}$$

Total U-Value

$$\underset{1\div \text{Total U-Value}}{1/0.019} = 52.632$$

Total R-Value

Reference Name: R.49.S2x4.16

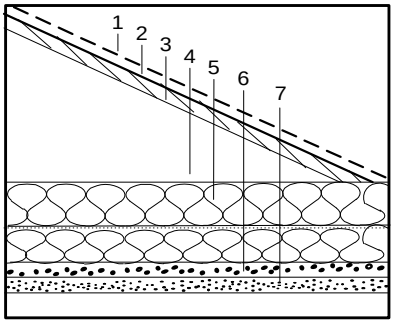

Sketch of Construction Assembly

Assembly Type: (check one)
- ___ Floor
- ___ Wall
- ✓ Ceiling/Roof

Framing Material: Metal

Framing Spacing: 16 "o.c.

Framing Size: Actual Depth 3.625; Actual Width 1.625

Cavity Insulation: R-value 11.00; Knock-out (%) 15.00; Web Thickness 0.060

Insulation Tape R-value: Interior Flange ___; Exterior Flange ___

List of Construction Components		R-Value
	Outside Surface Air Film	0.170
1.	Asphalt shingle	0.440
2.	0.50 in plywood	0.630
3.	3.50 in air space	0.800
4.	R-38 fiberglass insulation	38.00
5.	1.00 in polyisocyanurate	7.000
6.	0.50 in gypsum or plaster board	0.450
7.		
	Inside Surface Air Film	0.610

Calculation:

From EZFRAME = **0.019**

Total U-Value

$$\underset{1\div \text{Total U-Value}}{1/0.019} = 53.02$$

Total R-Value

Reference Name: R.49.2x4.24

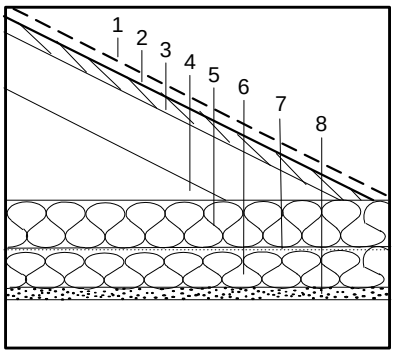

Sketch of Construction Assembly

Assembly Type: (check one)
- ____ Floor
- ____ Wall
- ✓ Ceiling/Roof

Framing Material: Wood

Framing Size: 2 × 4

Framing Spacing: 24 "o.c.

Framing Percentage: (check one)

Wall:	____	15% (16"o.c.)
	____	12% (24"o.c.)
	____	9% (48"o.c.)
Floor/Ceiling	____	10% (16"o.c.)
	✓	7% (24"o.c.)
	____	4% (48"o.c.)

Wall Weight / sf: NA
(Packages only)

List of Construction Components	R-Value Cavity (R_c)	R-Value Frame (R_f)
Outside Surface Air Film	0.170	0.170
1. Asphalt shingle roofing	0.440	0.440
2. Building paper (felt)	0.060	0.060
3. 0.50 in plywood	0.620	0.620
4. 3.50 in & greater air space; heat flow up	0.800	0.800
5. R-38 fiberglass insulation	38.000	38.000
6. R-11 fiberglass insulation	11.000	-----
7. 2X4 in fir framing	-----	3.465
8. 0.50 in gypsum or plaster board	0.450	0.450
Inside Surface Air Film	0.610	0.610
Total Unadjusted R-Values:	52.150	44.615
	R_c	R_f

Framing Adjustment Calculation:

$$[(\underset{1\div R_c}{1/52.15}) \times \underset{1-(Fr.\%\div 100)}{(1-7/100)}] + [(\underset{1\div R_f}{1/44.615}) \times \underset{Fr.\%\div 100}{(7/100)}] = \mathbf{0.019}$$

Total U-Value

$$\underset{1\div \text{Total U-Value}}{1/0.019} = 52.632$$

Total R-Value

Reference Name: R.49.S2x4.24

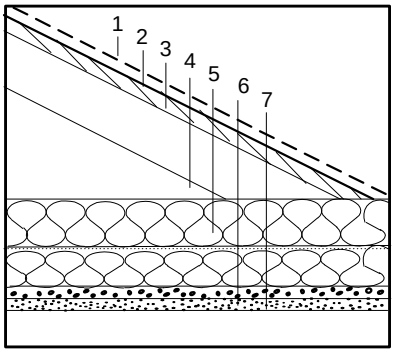

Sketch of Construction Assembly

Assembly Type: (check one)
- ____ Floor
- ____ Wall
- ✓ Ceiling/Roof

Framing Material: Metal

Framing Spacing: 24 "o.c.

Framing Size:

Actual Depth	3.625
Actual Width	1.625

Cavity Insulation:

R-value	11.00
Knock-out (%)	15.00
Web Thickness	0.060

Insulation Tape R-value:

Interior Flange	
Exterior Flange	

List of Construction Components	R-Value
Outside Surface Air Film	0.170
1. Asphalt Shingle	0.440
2. Building paper (felt)	0.060
3. 0.50 in Plywood	0.630
4. 3.50 in & greater air space; heat flow up	0.800
5. R-38 fiberglass insulation	38.000
6. 0.25 in Polyisocyanurate	1.750
7. 0.75 in gypsum or plaster board	0.680
Inside Surface Air Film	0.610

Calculation:

From EZFRAME = **0.018**

Total U-Value

$$\underset{1\div \text{Total U-Value}}{1/0.018} = 54.250$$

Total R-Value

Reference Name: FC.0.2x6.16

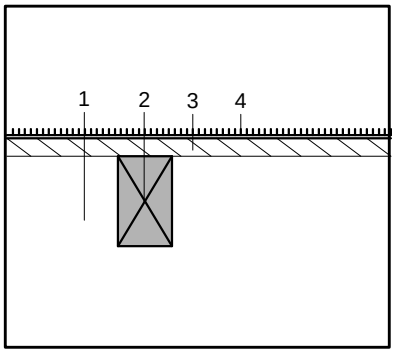

Sketch of Construction Assembly

Assembly Type: (check one)
- ✓ Floor
- Wall
- Ceiling/Roof

Framing Material: Wood

Framing Size: 2 × 6

Framing Spacing: 16 "o.c.

Framing Percentage: (check one)

Wall:		15% (16"o.c.)
		12% (24"o.c.)
		9% (48"o.c.)
Floor/Ceiling	✓	10% (16"o.c.)
		7% (24"o.c.)
		4% (48"o.c.)

Wall Weight / sf: (Packages only) NA

List of Construction Components		R-Value Cavity (R_c)	R-Value Frame (R_f)
	Outside Surface Air Film	0.170	0.170
1.	Effective R-value of vented crawlspace	6.000	6.000
2.	2X6 in fir framing	-----	5.445
3.	0.625 in plywood	0.770	0.770
4.	Carpet & Pad	2.080	2.080
5.			
6.			
7.			
	Inside Surface Air Film	0.920	0.920
	Total Unadjusted R-Values:	3.940	9.385
		R_c	R_f

Framing Adjustment Calculation:

[(1/9.940) × (1-10/100)] + [(1/15.385) × (10/100)] = **0.097**

$1 \div R_c$ 1-(Fr.% ÷100) $1 \div R_f$ Fr.% ÷100

Total U-Value

1/0.097 (1÷Total U-Value) = 10.309 **Total R-Value**

Reference Name: FC.0.S2x6.16

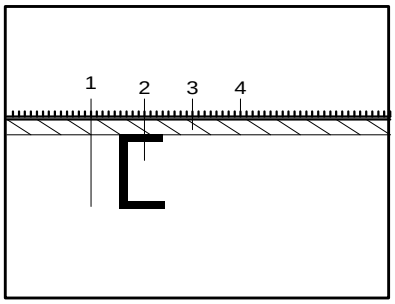

Sketch of Construction Assembly

Assembly Type: (check one)
- ✓ Floor
- Wall
- Ceiling/Roof

Framing Material: Metal

Framing Spacing: 16 "o.c.

Framing Size: Actual Depth 6.000; Actual Width 1.625

Cavity Insulation: R-value 0.800; Knock-out (%) 15.000; Web Thickness 0.060

Insulation Tape R-value: Interior Flange; Exterior Flange

List of Construction Components		R-Value
	Outside Surface Air Film	0.170
1.	Effective R-value of vented crawlspace	6.000
2.	0.625 in plywood	0.780
3.	Carpet & Pad	2.080
4.		
5.		
6.		
7.		
	Inside Surface Air Film	0.920

Calculation:

From EZFRAME = **0.094**

Total U-Value

1/0.094 (1÷Total U-Value) = 10.680 **Total R-Value**

Reference Name: FX.0.2x6.16

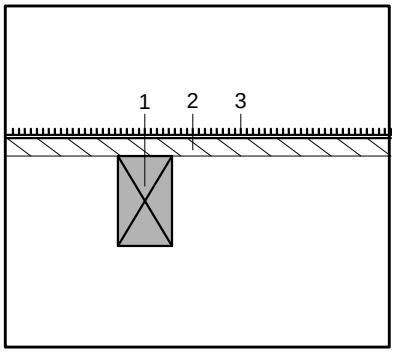

Sketch of Construction Assembly

Assembly Type: (check one) ✓ Floor; Wall; Ceiling/Roof

Framing Material: Wood

Framing Size: 2 × 6

Framing Spacing: 16 "o.c.

Framing Percentage: (check one)

Wall:		15% (16"o.c.)
		12% (24"o.c.)
		9% (48"o.c.)
Floor/Ceiling	✓	10% (16"o.c.)
		7% (24"o.c.)
		4% (48"o.c.)

Wall Weight / sf: (Packages only) NA

List of Construction Components	R-Value: Cavity (R_c)	R-Value: Frame (R_f)
Outside Surface Air Film	0.170	0.170
1. 2X6 in fir framing	-----	5.445
2. 0.625 in plywood	0.770	0.770
3. Carpet & Pad	2.080	2.080
4.		
5.		
6.		
7.		
Inside Surface Air Film	0.920	0.920
Total Unadjusted R-Values:	3.940	9.385
	R_c	R_f

Framing Adjustment Calculation:

[(1/3.940) × (1-10/100)] + [(1/9.385) × (10/100)] = **0.241**

$1 \div R_c$; 1-(Fr.% ÷100) ; $1 \div R_f$; Fr.% ÷100 = **Total U-Value**

1/0.241 (1÷Total U-Value) = 4.150 **Total R-Value**

Reference Name: FX.0.S2x6.16

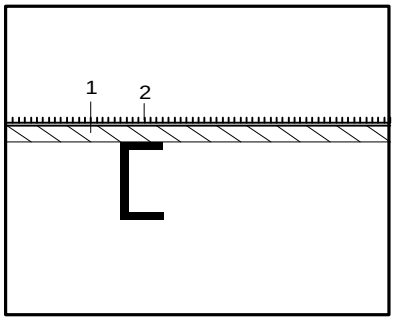

Sketch of Construction Assembly

Assembly Type: (check one) ✓ Floor; Wall; Ceiling/Roof

Framing Material: Metal

Framing Spacing: 16 "o.c.

Framing Size: Actual Depth 6.000; Actual Width 1.625

Cavity Insulation: R-value 0.800; Knock-out (%) 15.000; Web Thickness 0.060

Insulation Tape R-value: Interior Flange; Exterior Flange

List of Construction Components	R-Value
Outside Surface Air Film	0.170
1. 0.625 in plywood	0.780
2. Carpet & pad	2.08
3.	
4.	
5.	
6.	
7.	
Inside Surface Air Film	0.920

Calculation:

From EZFRAME = **0.253** **Total U-Value**

1/0.253 (1÷Total U-Value) = 3.950 **Total R-Value**

Reference Name: FC.11.2x6.16

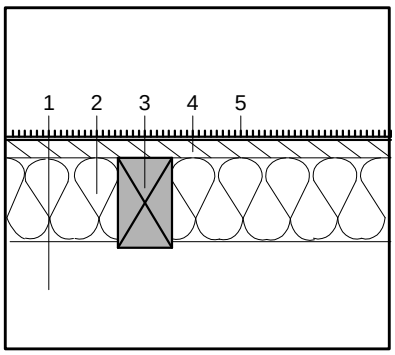

Sketch of Construction Assembly

Assembly Type: ✓ Floor
(check one) Wall
Ceiling/Roof

Framing Material: Wood
Framing Size: 2 × 6
Framing Spacing: 16 "o.c.
Framing Percentage: Wall:
(check one) 15% (16"o.c.)
12% (24"o.c.)
9% (48"o.c.)
Floor/Ceiling ✓ 10% (16"o.c.)
7% (24"o.c.)
4% (48"o.c.)

Wall Weight / sf: NA
(Packages only)

List of Construction Components	R-Value Cavity (R_c)	R-Value Frame (R_f)
Outside Surface Air Film	0.170	0.170
1. Effective R-value of vented crawlspace	6.000	6.000
2. R-11 fiberglass insulation	11.000	-----
3. 2X6 in fir framing	-----	5.445
4. 0.625 in plywood	0.770	0.770
5. Carpet & pad	2.080	2.080
6.		
7.		
Inside Surface Air Film	0.920	0.920
Total Unadjusted R-Values:	20.940	15.385
	R_c	R_f

Framing Adjustment Calculation:

$$\left[\left(\frac{1/20.940}{1\div R_c}\right) \times \left(\frac{1-10/100}{1-(\text{Fr.}\%\div 100)}\right)\right] + \left[\left(\frac{1/15.385}{1\div R_f}\right) \times \left(\frac{10/100}{\text{Fr.}\%\div 100}\right)\right] = \mathbf{0.050}$$

Total U-Value

$$\frac{1/0.050}{1\div\text{Total U-Value}} = \underset{\textbf{Total R-Value}}{20.00}$$

Reference Name: FC.11.S2x6.16

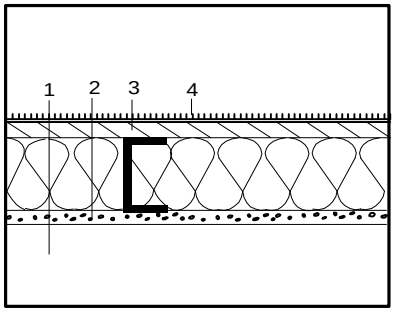

Sketch of Construction Assembly

Assembly Type: ✓ Floor
(check one) Wall
Ceiling/Roof

Framing Material: Metal
Framing Spacing: 16 "o.c.
Framing Size: Actual Depth 6.000
Actual Width 1.625
Cavity Insulation: R-value 11.000
Knock-out (%) 15.000
Web Thickness 0.060
Insulation Tape R-value: Interior Flange
Exterior Flange

List of Construction Components	R-Value
Outside Surface Air Film	0.170
1. Effective R-value of vented crawlspace	6.000
2. 0.75 in polyisocyanurate	5.250
3. 0.625 in plywood	0.780
4. Carpet & pad	2.080
5.	
6.	
7.	
Inside Surface Air Film	0.920

Calculation:

From EZFRAME = **0.048**

Total U-Value

$$\frac{1/0.048}{1\div\text{Total U-Value}} = \underset{\textbf{Total R-Value}}{21.030}$$

Reference Name: FX.11.2x6.16

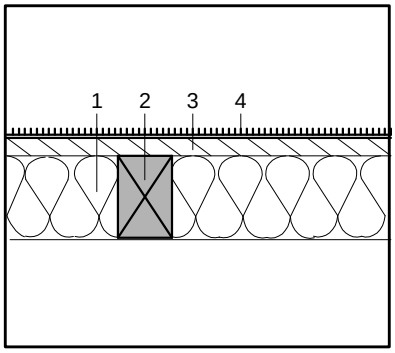

Sketch of Construction Assembly

Assembly Type: ✓ Floor
(check one) Wall
Ceiling/Roof

Framing Material: Wood
Framing Size: 2 × 6
Framing Spacing: 16 "o.c.
Framing Percentage: Wall: 15% (16"o.c.)
(check one) 12% (24"o.c.)
9% (48"o.c.)
Floor/Ceiling ✓ 10% (16"o.c.)
7% (24"o.c.)
4% (48"o.c.)

Wall Weight / sf: NA
(Packages only)

List of Construction Components	R-Value Cavity (R_c)	R-Value Frame (R_f)
Outside Surface Air Film	0.170	0.170
1. R-11 fiberglass insulation	11.000	-----
2. 2X6 in fir framing	-----	5.445
3. 0.625 in Plywood	0.770	0.770
4. Carpet & pad	2.080	2.080
5.		
6.		
7.		
Inside Surface Air Film	0.920	0.920
Total Unadjusted R-Values:	14.940	9.385
	R_c	R_f

Framing Adjustment Calculation:

$$[(\frac{1}{14.940}) \times (\frac{1-10/100}{1-(\text{Fr.\%} \div 100)})] + [(\frac{1}{9.385}) \times (\frac{10}{\text{Fr.\%} \div 100})] = \mathbf{0.071}$$

$1 \div R_c$ $1 \div R_f$

Total U-Value

$$\frac{1/0.071}{1 \div \text{Total U-Value}} = \frac{14.085}{\textbf{Total R-Value}}$$

Reference Name: FX.11.S2x6.16

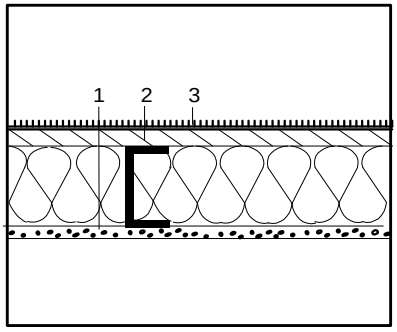

Sketch of Construction Assembly

Assembly Type: ✓ Floor
(check one) Wall
Ceiling/Roof

Framing Material: Metal
Framing Spacing: 16 "o.c.
Framing Size: Actual Depth 6.000
Actual Width 1.625
Cavity Insulation: R-value 11.000
Knock-out (%) 15.000
Web Thickness 0.060
Insulation Tape R-value: Interior Flange
Exterior Flange

List of Construction Components	R-Value
Outside Surface Air Film	0.170
1. 0.75 in polyisocyanurate	5.250
2. 0.625 in plywood	0.780
3. Carpert & pad	2.080
4.	
5.	
6.	
7.	
Inside Surface Air Film	0.920

Calculation:

From EZFRAME = **0.071**

Total U-Value

$$\frac{1/0.071}{1 \div \text{Total U-Value}} = \frac{14.16}{\textbf{Total R-Value}}$$

Reference Name: FC.13.2x6.16

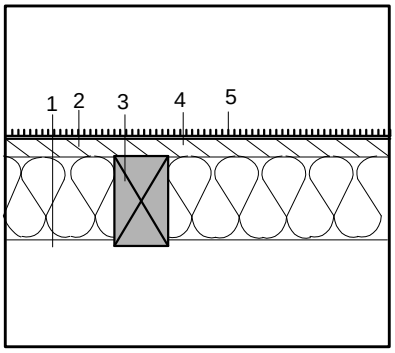

Sketch of Construction Assembly

Assembly Type: ✓ Floor
(check one) Wall
Ceiling/Roof

Framing Material: Wood
Framing Size: 2 × 6
Framing Spacing: 16 "o.c.
Framing Percentage: Wall: 15% (16"o.c.)
(check one) 12% (24"o.c.)
9% (48"o.c.)
Floor/Ceiling ✓ 10% (16"o.c.)
7% (24"o.c.)
4% (48"o.c.)

Wall Weight / sf: NA
(Packages only)

List of Construction Components	R-Value Cavity (R_c)	R-Value Frame (R_f)
Outside Surface Air Film	0.170	0.170
1. Effective R-Value of vented crawlspace	6.000	6.000
2. R-13 fiberglass insulation	13.000	-----
3. 2X6 in fir framing	-----	5.445
4. 0.625 in plywood	0.770	0.770
5. Carpet & pad	2.080	2.080
6.		
7.		
Inside Surface Air Film	0.920	0.920
Total Unadjusted R-Values:	22.940	15.385
	R_c	R_f

Framing Adjustment Calculation:

$$[(\frac{1}{22.94}) \times (\frac{1-10/100}{1-(Fr.\% \div 100)})] + [(\frac{1}{15.385}) \times (\frac{10/100}{Fr.\% \div 100})] = \mathbf{0.046}$$

$1 \div R_c$ $1 \div R_f$

Total U-Value

$$\frac{1/0.046}{1 \div \text{Total U-Value}} = \underset{\textbf{Total R-Value}}{21.740}$$

Reference Name: FC.13.S2x6.16

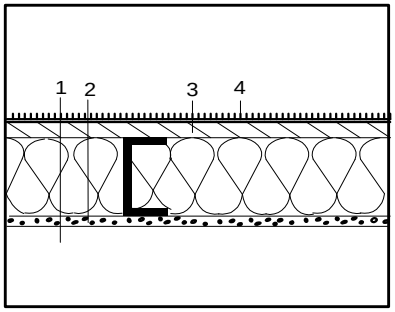

Sketch of Construction Assembly

Assembly Type: ✓ Floor
(check one) Wall
Ceiling/Roof

Framing Material: Metal
Framing Spacing: 16 "o.c.
Framing Size: Actual Depth 6.000
Actual Width 1.625
Cavity Insulation: R-value 13.000
Knock-out (%) 15.000
Web Thickness 0.060
Insulation Tape R-value: Interior Flange
Exterior Flange

List of Construction Components	R-Value
Outside Surface Air Film	0.170
1. Effective R-Value of vented crawlspace	6.000
2. 1.00 in polyisocyanurate	7.000
3. 0.625 in plywood	0.780
4. Carpet & pad	2.080
5.	
6.	
7.	
Inside Surface Air Film	0.920

Calculation:

From EZFRAME = **0.043**

Total U-Value

$$\frac{1/0.043}{1 \div \text{Total U-Value}} = \underset{\textbf{Total R-Value}}{23.340}$$

Reference Name: FX.13.2x6.16

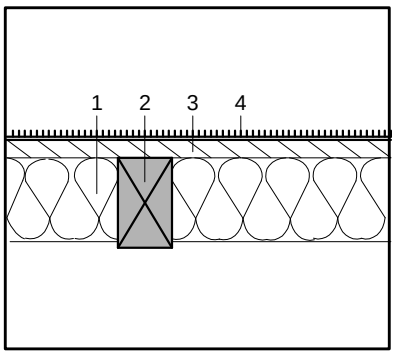

Sketch of Construction Assembly

Assembly Type: ✓ Floor
(check one) Wall
Ceiling/Roof

Framing Material: Wood
Framing Size: 2 × 6
Framing Spacing: 16 "o.c.
Framing Percentage: Wall: 15% (16"o.c.)
(check one) 12% (24"o.c.)
9% (48"o.c.)
Floor/Ceiling ✓ 10% (16"o.c.)
7% (24"o.c.)
4% (48"o.c.)

Wall Weight / sf: NA
(Packages only)

List of Construction Components	R-Value Cavity (R_c)	R-Value Frame (R_f)
Outside Surface Air Film	0.170	0.170
1. R-13 fiberglass insulation	13.000	-----
2. 2X6 in fir framing	-----	5.445
3. 0.625 in plywood	0.770	0.770
4. Carpet & pad	2.080	2.080
5.		
6.		
7.		
Inside Surface Air Film	0.920	0.920
Total Unadjusted R-Values:	16.940	9.385
	R_c	R_f

Framing Adjustment Calculation:

$$[(\frac{1}{16.940}) \times (\frac{1-10/100}{1-(\text{Fr.\%} \div 100)})] + [(\frac{1/9.385}{1 \div R_f}) \times (\frac{10/100}{\text{Fr.\%} \div 100})] = \mathbf{0.064}$$

Total U-Value

$$\frac{1/0.064}{1 \div \text{Total U-Value}} = 15.625$$

Total R-Value

Reference Name: FX.13.S2x6.16

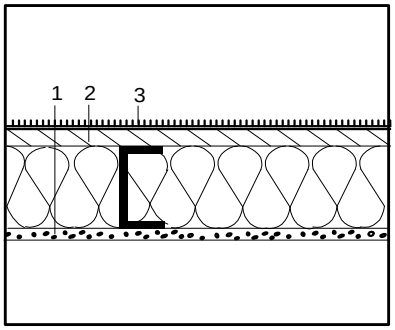

Sketch of Construction Assembly

Assembly Type: ✓ Floor
(check one) Wall
Ceiling/Roof

Framing Material: Metal
Framing Spacing: 16 "o.c.
Framing Size: Actual Depth 6.000
Actual Width 1.625
Cavity Insulation: R-value 13.000
Knock-out (%) 15.000
Web Thickness 0.060
Insulation Tape R-value: Interior Flange
Exterior Flange

List of Construction Components	R-Value
Outside Surface Air Film	0.170
1. 1.00 in polyisocyanurate	7.000
2. 0.625 in plywood	0.780
3. Carpet & pad	2.080
4.	
5.	
6.	
7.	
Inside Surface Air Film	0.920

Calculation:

From EZFRAME = **0.058**

Total U-Value

$$\frac{1/0.058}{1 \div \text{Total U-Value}} = 17.340$$

Total R-Value

Reference Name: FC.19.2x8.16

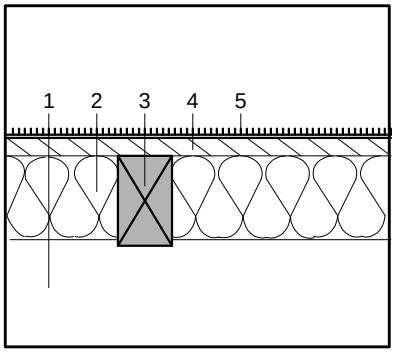

Sketch of Construction Assembly

Assembly Type: ✓ Floor
(check one) Wall
Ceiling/Roof

Framing Material: Wood

Framing Size: 2 × 8

Framing Spacing: 16 "o.c.

Framing Percentage: (check one)

Wall:		15% (16"o.c.)
		12% (24"o.c.)
		9% (48"o.c.)
Floor/Ceiling	✓	10% (16"o.c.)
		7% (24"o.c.)
		4% (48"o.c.)

Wall Weight / sf: NA
(Packages only)

List of Construction Components	Cavity (R_c)	Frame (R_f)
Outside Surface Air Film	0.170	0.170
1. Effective R-value of vented crawlspace	6.000	6.000
2. R-19 fiberglass insulation	19.000	-----
3. 7.25 in fir framing	-----	7.178
4. 0.625 in plywood	0.770	0.770
5. Carpet & pad	2.080	2.080
6.		
7.		
Inside Surface Air Film	0.920	0.920
Total Unadjusted R-Values:	28.940	17.118
	R_c	R_f

Framing Adjustment Calculation:

$$\left[\left(\frac{1/14.535}{1\div R_c}\right) \times \left(\frac{1-10/100}{1-(Fr.\%\div 100)}\right)\right] + \left[\left(\frac{1/17.118}{1\div R_f}\right) \times \left(\frac{10/100}{Fr.\%\div 100}\right)\right] = \mathbf{0.037}$$

Total U-Value

$$\frac{1/0.037}{1\div \text{Total U-Value}} = 27.027$$

Total R-Value

Reference Name: FC.19.S2x8.16

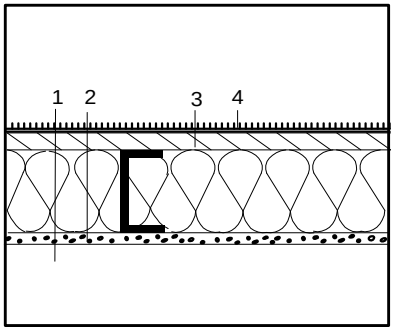

Sketch of Construction Assembly

Assembly Type: ✓ Floor
(check one) Wall
Ceiling/Roof

Framing Material: Metal

Framing Spacing: 16 "o.c.

Framing Size:

Actual Depth	8.00
Actual Width	1.625

Cavity Insulation:

R-value	19.000
Knock-out (%)	15.000
Web Thickness	0.060

Insulation Tape R-value:

Interior Flange	
Exterior Flange	

List of Construction Components	R-Value
Outside Surface Air Film	0.170
1. Effective R-value of vented crawlspace	6.000
2. 1.50 in polyisocyanurate	10.500
3. 0.625 in plywood	0.780
4. Carpet & pad	2.080
5.	
6.	
7.	
Inside Surface Air Film	0.920

Calculation:

From EZFRAME = **0.035**

Total U-Value

$$\frac{1/0.035}{1\div \text{Total U-Value}} = 28.700$$

Total R-Value

Reference Name: FX.19.2x8.16

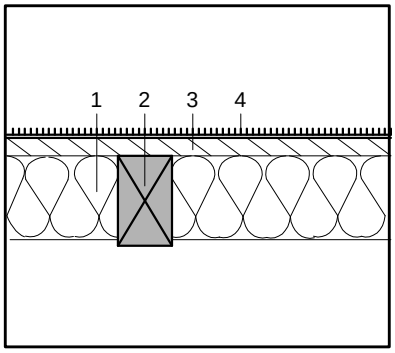

Sketch of Construction Assembly

Assembly Type: ✓ Floor
(check one) Wall
Ceiling/Roof

Framing Material: **Wood**

Framing Size: 2 × 8

Framing Spacing: 16 "o.c.

Framing Percentage: (check one)

Wall:		15% (16"o.c.)
		12% (24"o.c.)
		9% (48"o.c.)
Floor/Ceiling	✓	10% (16"o.c.)
		7% (24"o.c.)
		4% (48"o.c.)

Wall Weight / sf: NA
(Packages only)

List of Construction Components	Cavity (R_c)	Frame (R_f)
Outside Surface Air Film	0.170	0.170
1. R-19 fiberglass insulation	19.000	-----
2. 7.25 in fir framing	-----	7.178
3. 0.625 in plywood	0.770	0.770
4. Carpet & pad	2.080	2.080
5.		
6.		
7.		
Inside Surface Air Film	0.920	0.920
Total Unadjusted R-Values:	22.940	11.118
	R_c	R_f

Framing Adjustment Calculation:

$$[(\frac{1}{1\div R_c}) \times (\frac{1-10/100}{1-(Fr.\%\div 100)})] + [(\frac{1}{1\div R_f}) \times (\frac{10}{Fr.\%\div 100})] = \frac{1}{1\div \text{Total U-Value}}$$

$$[(\frac{1}{1\div 22.940}) \times (\frac{1-10/100}{1-(10\div 100)})] + [(\frac{1}{1\div 11.118}) \times (\frac{10}{10\div 100})] = \frac{1}{1\div 0.049}$$

0.049
Total U-Value

20.408
Total R-Value

Reference Name: FX.19.S2x8.16

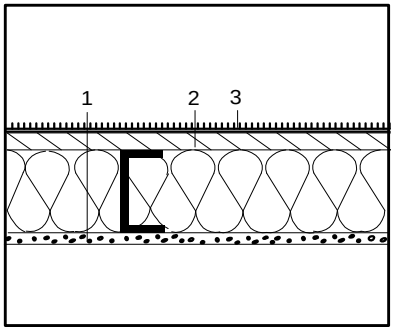

Sketch of Construction Assembly

Assembly Type: ✓ Floor
(check one) Wall
Ceiling/Roof

Framing Material: **Metal**

Framing Spacing: 16 "o.c.

Framing Size:

Actual Depth	8.00
Actual Width	1.625

Cavity Insulation:

R-value	19.000
Knock-out (%)	15.000
Web Thickness	0.060

Insulation Tape R-value:

Interior Flange	
Exterior Flange	

List of Construction Components	R-Value
Outside Surface Air Film	0.170
1. 1.25 in polyisocyanurate	8.750
2. 0.625 in plywood	0.780
3. Carpet & pad	2.080
4.	
5.	
6.	
7.	
Inside Surface Air Film	0.920

Calculation:

From EZFRAME = **0.048**
Total U-Value

$$\frac{1}{1\div \text{Total U-Value}} = \frac{1}{1\div 0.048}$$

20.950
Total R-Value

Reference Name: FC.21.2x8.16

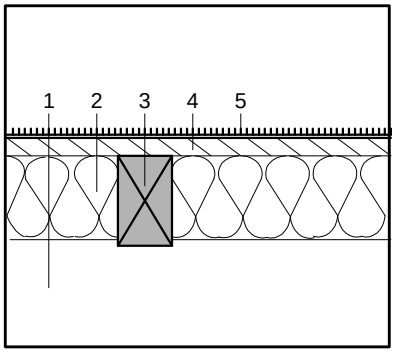

Sketch of Construction Assembly

Assembly Type: ✓ Floor
(check one) Wall
Ceiling/Roof

Framing Material: Wood
Framing Size: 2 × 8
Framing Spacing: 16 "o.c.
Framing Percentage: Wall: 15% (16"o.c.)
(check one) 12% (24"o.c.)
9% (48"o.c.)
Floor/Ceiling ✓ 10% (16"o.c.)
7% (24"o.c.)
4% (48"o.c.)

Wall Weight / sf: NA
(Packages only)

List of Construction Components	R-Value Cavity (R_c)	R-Value Frame (R_f)
Outside Surface Air Film	0.170	0.170
1. Effective R-value of vented crawlspace	6.000	6.000
2. R-21 fiberglass insulation	21.000	-----
3. 7.25 in fir framing	-----	7.178
4. 0.625 in plywood	0.770	0.770
5. Carpet & pad	2.080	2.080
6.		
7.		
Inside Surface Air Film	0.920	0.920
Total Unadjusted R-Values:	30.940	17.118
	R_c	R_f

Framing Adjustment Calculation:

$$[(\tfrac{1/30.940}{1\div R_c}) \times (\tfrac{1-10/100}{1-(Fr.\%\div 100)})] + [(\tfrac{1/17.118}{1\div R_f}) \times (\tfrac{10/100}{Fr.\%\div 100})] = \boxed{0.035}$$

Total U-Value

$$\tfrac{1/0.035}{1\div \text{Total U-Value}} = 28.571$$

Total R-Value

Reference Name: FC.21.S2x8.16

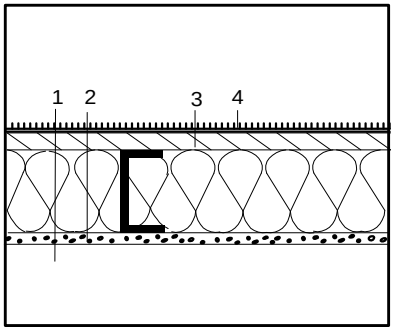

Sketch of Construction Assembly

Assembly Type: ✓ Floor
(check one) Wall
Ceiling/Roof

Framing Material: Metal
Framing Spacing: 16 "o.c.
Framing Size: Actual Depth 8.00
Actual Width 1.625
Cavity Insulation: R-value 21.000
Knock-out (%) 15.000
Web Thickness 0.060
Insulation Tape R-value: Interior Flange
Exterior Flange

List of Construction Components	R-Value
Outside Surface Air Film	0.170
1. Effective R-value of vented crawlspace	6.000
2. 1.50 in polyisocyanurate	10.50
3. 0.625 in plywood	0.780
4. Carpet & pad	2.080
5.	
6.	
7.	
Inside Surface Air Film	0.920

Calculation:

From EZFRAME = **0.034**

Total U-Value

$$\tfrac{1/0.034}{1\div \text{Total U-Value}} = 29.080$$

Total R-Value

Reference Name: FX.21.2x8.16

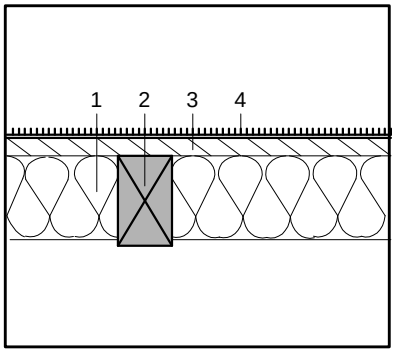

Sketch of Construction Assembly

Assembly Type: ✓ Floor
(check one) Wall
Ceiling/Roof

Framing Material: Wood
Framing Size: 2 × 8
Framing Spacing: 16 "o.c.
Framing Percentage: Wall: 15% (16"o.c.)
(check one) 12% (24"o.c.)
9% (48"o.c.)
Floor/Ceiling ✓ 10% (16"o.c.)
7% (24"o.c.)
4% (48"o.c.)

Wall Weight / sf: NA
(Packages only)

List of Construction Components	R-Value Cavity (R_c)	R-Value Frame (R_f)
Outside Surface Air Film	0.170	0.170
1. R-19 fiberglass insulation	21.000	-----
2. 7.25 in fir framing	-----	7.178
3. 0.625 in plywood	0.780	0.780
4. Carpet & pad	2.080	2.080
5.		
6.		
7.		
Inside Surface Air Film	0.920	0.920
Total Unadjusted R-Values:	22.950	11.128
	R_c	R_f

Framing Adjustment Calculation:

$$[(\frac{1}{24.950}) \times (\frac{1-10}{100})] + [(\frac{1}{11.128}) \times (\frac{10}{100})] = \mathbf{0.045}$$

$1 \div R_c$; $1-(Fr.\% \div 100)$; $1 \div R_f$; $Fr.\% \div 100$

Total U-Value

$$\frac{1}{0.045} = 22.220$$

$1 \div$ Total U-Value

Total R-Value

Reference Name: FX.21.S2x8.16

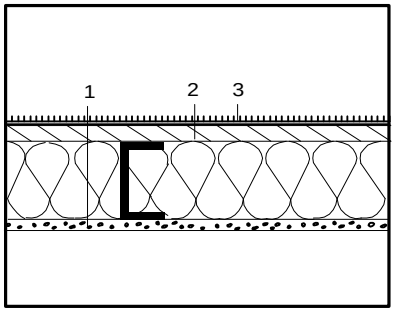

Sketch of Construction Assembly

Assembly Type: ✓ Floor
(check one) Wall
Ceiling/Roof

Framing Material: Metal
Framing Spacing: 16 "o.c.
Framing Size: Actual Depth 8.00
Actual Width 1.625
Cavity Insulation: R-value 21.000
Knock-out (%) 15.000
Web Thickness 0.060
Insulation Tape R-value: Interior Flange
Exterior Flange

List of Construction Components	R-Value
Outside Surface Air Film	0.170
1. 1.50 in polyisocyanurate	10.50
2. 0.625 in plywood	0.780
3. Carpet & pad	2.080
4.	
5.	
6.	
7.	
Inside Surface Air Film	0.920

Calculation:

From EZFRAME = **0.043**

Total U-Value

$$\frac{1}{0.043} = 23.080$$

$1 \div$ Total U-Value

Total R-Value

Reference Name: FC.30.2x10.16

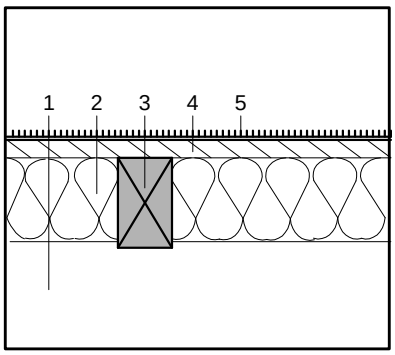

Sketch of Construction Assembly

Assembly Type: ✓ Floor
(check one) Wall
Ceiling/Roof

Framing Material: **Wood**

Framing Size: 2 × 8

Framing Spacing: 16 "o.c.

Framing Percentage: (check one)

Wall:		15% (16"o.c.)
		12% (24"o.c.)
		9% (48"o.c.)
Floor/Ceiling	✓	10% (16"o.c.)
		7% (24"o.c.)
		4% (48"o.c.)

Wall Weight / sf: NA
(Packages only)

List of Construction Components	Cavity (R_c)	Frame (R_f)
Outside Surface Air Film	0.170	0.170
1. Effective R-value of vented crawlspace	6.000	6.000
2. R-30 fiberglass insulation	30.000	-----
3. 9.25 in fir framing	-----	9.158
4. 0.625 in plywood	0.770	0.770
5. Carpet & pad	2.080	2.080
6.		
7.		
Inside Surface Air Film	0.920	0.920
Total Unadjusted R-Values:	39.940	19.098
	R_c	R_f

Framing Adjustment Calculation:

$$[(\frac{1}{39.940}) \times (\frac{1-10/100}{1-(Fr.\% \div 100)})] + [(\frac{1}{19.098}) \times (\frac{10}{Fr.\% \div 100})] = \mathbf{0.028}$$

($1 \div R_c$ and $1 \div R_f$)

Total U-Value

$$\frac{1}{1 \div \text{Total U-Value}} = \frac{1}{0.028} = 35.714$$

Total R-Value

Reference Name: FC.30.S2x10.16

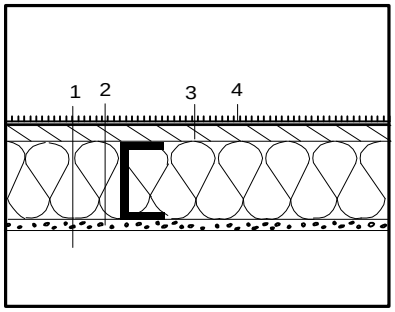

Sketch of Construction Assembly

Assembly Type: ✓ Floor
(check one) Wall
Ceiling/Roof

Framing Material: **Metal**

Framing Spacing: 16 "o.c.

Framing Size:

Actual Depth	10.000
Actual Width	1.625

Cavity Insulation:

R-value	30.000
Knock-out (%)	15.000
Web Thickness	0.060

Insulation Tape R-value:

Interior Flange	
Exterior Flange	

List of Construction Components	R-Value
Outside Surface Air Film	0.170
1. Effective R-value of vented crawlspace	6.000
2. 2.50 in polyisocyanurate	17.50
3. 0.625 in plywood	0.780
4. Carpet & pad	2.080
5.	
6.	
7.	
Inside Surface Air Film	0.920

Calculation:

From EZFRAME = **0.026**

Total U-Value

$$\frac{1}{1 \div \text{Total U-Value}} = \frac{1}{0.026} = 38.110$$

Total R-Value

Reference Name: FX.30.2x10.16

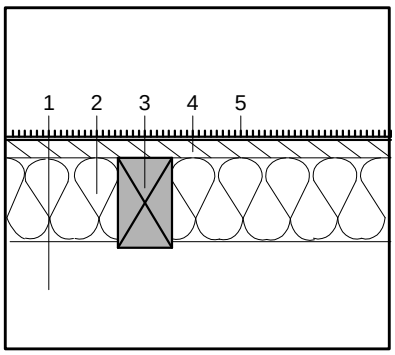

Sketch of Construction Assembly

Assembly Type: ✓ Floor
(check one) Wall
Ceiling/Roof

Framing Material: Wood
Framing Size: 2 × 8
Framing Spacing: 16 "o.c.
Framing Percentage: Wall: 15% (16"o.c.)
(check one) 12% (24"o.c.)
9% (48"o.c.)
Floor/Ceiling ✓ 10% (16"o.c.)
7% (24"o.c.)
4% (48"o.c.)

Wall Weight / sf: NA
(Packages only)

List of Construction Components	R-Value Cavity (R_c)	R-Value Frame (R_f)
Outside Surface Air Film	0.170	0.170
1. R-30 fiberglass insulation	30.000	-----
2. 9.25 in fir framing	-----	9.158
3. 0.625 in plywood	0.770	0.770
4. Carpet & pad	2.080	2.080
5.		
6.		
7.		
Inside Surface Air Film	0.920	0.920
Total Unadjusted R-Values:	39.940	19.098
	R_c	R_f

Framing Adjustment Calculation:

$$[(\tfrac{1}{33.940}) \times (\tfrac{1-10}{100})] + [(\tfrac{1}{13.098}) \times (\tfrac{10}{100})] = 0.034$$

($1 \div R_c$; $1-(Fr.\% \div 100)$; $1 \div R_f$; $Fr.\% \div 100$)

Total U-Value

$$\frac{1}{0.034} = 29.412$$

($1 \div$ Total U-Value)

Total R-Value

Reference Name: FX.30.S2x10.16

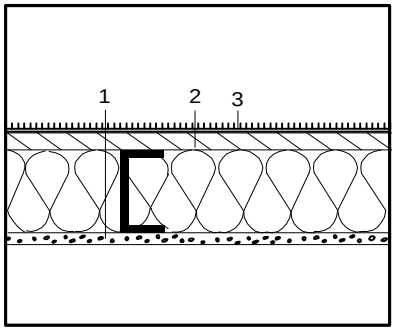

Sketch of Construction Assembly

Assembly Type: ✓ Floor
(check one) Wall
Ceiling/Roof

Framing Material: Metal
Framing Spacing: 16 "o.c.
Framing Size: Actual Depth 10.000
Actual Width 1.625
Cavity Insulation: R-value 38.000
Knock-out (%) 15.000
Web Thickness 0.060
Insulation Tape R-value: Interior Flange
Exterior Flange

List of Construction Components	R-Value
Outside Surface Air Film	0.170
1. 2.50 in polyisocyanurate	17.50
2. 0.625 in plywood	0.780
3. Carpet & pad	2.080
4.	
5.	
6.	
7.	
Inside Surface Air Film	0.920

Calculation:

From EZFRAME = **0.031**

Total U-Value

$$\frac{1}{0.031} = 32.110$$

($1 \div$ Total U-Value)

Total R-Value

EZFrame can be purchased by ordering the following:

Publication No.:	P400-94-002R
Cost:	$14.00
Address:	California Energy Commission Pulications, MS-13 P.O. Box 944295 Sacramento, CA 94244-2950

Appendix I
Framing Calculations/ Tables/Forms

FRAMING CALCULATION APPROACHES/TABLES

When showing compliance with the building energy efficiency standard, the envelope assemblies U-value must meet the requirements of the standard. For wood and metal framed, light and heavy mass walls the tabulated default values or calculation methods presented in this section to determine the U-value of an assembly can be used in compliance.

FRAMED WALL ASSEMBLY U-VALUES ***I-5-6***

If the wall assembly is very generic or there is no need to take advantage or evaluate specific components of a construction assembly, the default U-values in Table B-2 (see page I-4) can be used. Use of Table B-2 will significantly simplify compliance and save considerable time, however, the assumption used to develop these default tables are very conservative.

METAL FRAMING FACTORS ***I-7***

This table includes values reference in Chapter 2 and Appendix G to be used to adjust U-value calculations using a parallel method when metal framing is calculated using the nonresidential ENV-3 form.

PROPERTIES OF MASONRY WALLS ***I-8-9***

These tables list the U-value and Heat Capacity of basic types of masonry block construction. They also include the effects of insulation placed on block walls.

EFFECTIVE R-VALUES FOR INTERIOR INSULATION ***I-10-11***
LAYERSON STRUCTURAL MASS WALLS

These tables provide information for determining the effect of insulating a masonry wall.

FRAMED FLOOR/CEILING ASSEMBLIES U-VALUES ***I-12***

This refers to Appendix H that includes diagrams and assembly U-value calculation for some basic ceiling and floor assemblies.

U-VALUE CALCULATION PROCEDURE
FOR CALCULATING METAL FRAMED ASSEMBLIES ***I-12***

This section refers to Appendix B of the *Nonresidential Manual*.

COMPUTER MODELING OF FRAMED ASSEMBLIES ***I-12***

This Energy Commission has developed the EZ-FRAME program to automate ASHRAE procedures in order to help the building community in calculating the U-values of wood and metal framed assemblies with a higher degree of accuracy and speed. The output forms of this program can be used as part of a residential or nonresidential submittal.

CONSTRUCTION ASSEMBLY FORMS ***I-13-20***

These are the directions for completing the ENV-3 forms (from the Nonresidential Manual) for metal frame, masonry, and wood frame assemblies. These forms can be used for residential compliance.

Framed Wall Assembly U-values
From Table B-2 Nonresidential Manual

Framing Type and Spacing	Framing Cavity R-Value	Insulated Sheathing R-Value	Wood Wall U-Value	Metal Wall U-Value
2x4 @ 16" O.C.	11 (compressed)	0	0.098	0.202
		4	0.068	0.112
		5	0.064	0.101
		7	0.056	0.084
		8.7	0.051	0.073
	13	0	0.088	0.195
		4	0.063	0.109
		5	0.059	0.099
		7	0.052	0.082
		8.7	0.048	0.072
	15	0	0.081	0.189
		4	0.059	0.108
		5	0.055	0.097
		7	0.049	0.077
		8.7	0.045	0.071
2x4 @ 24" O.C.	11	0	0.094	0.173
		4	0.066	0.102
		5	0.062	0.093
		7	0.055	0.078
		8.7	0.050	0.069
	13	0	0.085	0.165
		4	0.061	0.099
		5	0.057	0.090
		7	0.051	0.077
		8.7	0.047	0.068
	15	0	0.077	0.158
		4	0.056	0.097
		5	0.053	0.088
		7	0.047	0.071
		8.7	0.044	0.067

Framing Type and Spacing	Framing Cavity R-Value	Insulated Sheathing R-Value	Wood Wall U-Value	Metal Wall U-Value
2x6 @ 16" O.C.	19 (compressed)	0	0.065	0.120
		4	0.058	0.098
		5	0.048	0.089
		7	0.043	0.075
		8.7	0.040	0.067
	21	0	0.059	0.157
		4	0.046	0.096
		5	0.044	0.088
		7	0.041	0.075
		8.7	0.037	0.066
	22 (compressed)	0	0.062	0.158
		4	0.048	0.097
		5	0.045	0.088
		7	0.041	0.075
		8.7	0.038	0.067
2x6 @ 24" O.C.	19 (compressed)	0	0.062	0.135
		4	0.048	0.088
		5	0.045	0.081
		7	0.042	0.070
		8.7	0.039	0.062
	21	0	0.056	0.130
		4	0.044	0.086
		5	0.042	0.079
		7	0.039	0.068
		8.7	0.036	0.061
	22 (compressed)	0	0.058	0.132
		4	0.046	0.086
		5	0.043	0.079
		7	0.040	0.068
		8.7	0.037	0.061

Framed Wall Assembly U-values (cont'd)

Framing Type and Spacing	Framing Cavity R-Value	Insulated Sheathing R-Value	Wood Wall U-Value	Metal Wall U-Value
2x8 @ 16" O.C.	19	0	0.059	0.145
		4	0.047	0.092
		5	0.044	0.084
		7	0.041	0.072
		8.7	0.038	0.064
	22	0	0.054	0.140
		4	0.043	0.090
		5	0.041	0.082
		7	0.038	0.071
		8.7	0.035	0.063
	25	0	0.050	0.136
		4	0.040	0.088
		5	0.038	0.081
		7	0.035	0.070
		8.7	0.033	0.062
	30 (compressed)	0	0.048	0.135
		4	0.039	0.088
		5	0.037	0.081
		7	0.035	0.070
		8.7	0.032	0.062
2x8 @ 24" O.C.	19	0	0.056	0.122
		4	0.045	0.082
		5	0.043	0.076
		7	0.040	0.066
		8.7	0.037	0.059
	22	0	0.051	0.117
		4	0.041	0.080
		5	0.040	0.074
		7	0.036	0.064
		8.7	0.034	0.058
	25	0	0.047	0.113
		4	0.038	0.078
		5	0.037	0.072
		7	0.034	0.063
		8.7	0.032	0.057
	30 (compressed)	0	0.046	0.112
		4	0.037	0.077
		5	0.036	0.072
		7	0.034	0.063
		8.7	0.031	0.057

Framing Type and Spacing	Framing Cavity R-Value	Insulated Sheathing R-Value	Wood Wall U-Value	Metal Wall U-Value
2x10 @ 16" O.C.	30	0	0.041	0.120
		4	0.035	0.081
		5	0.033	0.075
		7	0.031	0.065
		8.7	0.029	0.059
	38 (compressed)	0	0.040	0.119
		4	0.033	0.080
		5	0.032	0.074
		7	0.030	0.065
		8.7	0.028	0.058
2x10 @ 24" O.C.	30 (compressed)	0	0.039	0.099
		4	0.033	0.071
		5	0.032	0.066
		7	0.030	0.058
		8.7	0.028	0.053
	38	0	0.038	0.097
		4	0.032	0.070
		5	0.031	0.066
		7	0.029	0.058
		8.7	0.027	0.053

Metal Framing Factor

METAL FRAMING FACTORS			
Stud Spacing	Stud Depth	Insulation R-Value	Framing Factor
16" o.c.	4"	R-7	0.522
		R-11	0.403
		R-13	0.362
		R-15	0.328
	6"	R-19	0.325
		R-21	0.300
		R-22	0.287
		R-25	0.263
24" o.c.	4"	R-7	0.577
		R-11	0.458
		R-13	0.415
		R-15	0.379
	6"	R-19	0.375
		R-21	0.348
		R-22	0.335
		R-25	0.308
R-value calculation for Exterior Wall Assemblies with Metal Studs, July, 19, 1990, Staff Draft Docket 90-CON-1.			
*Correction to metal framing factors applies to the entire assembly including: interior air films, interior surfaces, cavity/insulation, exterior surfaces, and exterior air films.			

Properties of Hollow Unit Masonry Walls

Type			Core Treatment		
			Solid Grout	Partly Grouted with Ungrouted Cells	
				Empty	Insulated
12"	LW CMU	U	0.51	0.43	0.30
		Rw	2.0	2.3	3.3
		HC	23	14.8	14.8
	MW CMU	U	0.54	0.46	0.33
		Rw	1.9	2.2	3.0
		HC	23.9	15.6	15.6
	NW CMU	U	0.57	0.49	0.36
		Rw	1.8	2.0	2.8
		HC	24.8	16.5	16.5
10"	LW CMU	U	0.55	0.46	0.34
		Rw	1.8	2.2	2.9
		HC	18.9	12.6	12.6
	MW CMU	U	0.59	0.49	0.37
		Rw	1.7	2.1	2.7
		HC	19.7	13.4	13.4
	NW CMU	U	0.62	0.52	0.41
		Rw	1.6	1.9	2.4
		HC	20.5	14.2	14.2
8"	LW CMU	U	0.62	0.50	0.37
		Rw	1.6	2.0	2.7
		HC	15.1	9.9	9.9
	MW CMU	U	0.65	0.53	0.41
		Rw	1.5	1.9	2.4
		HC	15.7	10.5	10.5
	NW CMU	U	0.69	0.56	0.44
		Rw	1.4	1.8	2.3
		HC	16.3	11.1	11.1
	Clay Unit	U	0.57	0.47	0.39
		Rw	1.8	2.1	2.6
		HC	15.1	11.4	11.4
6"	LW CMU	U	0.68	0.54	0.44
		Rw	1.5	1.9	2.3
		HC	10.9	7.9	7.9
	MW CMU	U	0.72	0.58	0.48
		Rw	1.4	1.7	2.1
		HC	11.4	8.4	8.4
	NW CMU	U	0.76	0.61	0.52
		Rw	1.3	1.6	1.9
		HC	11.9	8.9	8.9
	Clay Unit	U	0.65	0.52	0.45
		Rw	1.5	1.9	2.2
		HC	11.1	8.6	8.6

Notes:
LW CMU is a Light Weight Concrete Masonry Unit per ASTM C 90, Calculated at 105 PCF density
MW CMU is a Medium Weight Concrete Masonry Unit per ASTM C 90, Calculated at 115 PCF density
NW CMU is a Normal Weight Concrete Masonry Unit per ASTM C 90, Calculated at 125 PCF density
Clay Unit is a Hollow Clay Unit per ASTM C 652, Calculated at 130 PCF density
Values include air films on inner and outer surfaces.
Calculations based on Energy Calculations and Data, CMACN, 1986
Grouted Cells at 32" X 48" in Partly Grouted Walls
Source: Berkeley Solar Group; Concrete Masonry Association of California and Nevada

Properties of Solid Unit Masonry and Solid Concrete Walls

Type		Layer Thickness, inches									
		3	4	5	6	7	8	9	10	11	12
LW CMU	U	na	0.71	0.64	Na	na	na	na	na	na	na
	Rw	na	1.4	1.6	Na	na	na	na	na	na	na
	HC	na	7.00	8.75	Na	na	na	na	na	na	na
MW CMU	U	na	0.76	0.70	Na	na	na	na	na	na	na
	Rw	na	1.3	1.4	Na	na	na	na	na	na	na
	HC	na	7.67	9.58	Na	na	na	na	na	na	na
NW CMU	U	0.89	0.82	0.76	Na	na	na	na	na	na	na
	Rw	1.1	1.2	1.3	Na	na	na	na	na	na	na
	HC	6.25	8.33	10.42	Na	na	na	na	na	na	na
Clay Brick	U	0.80	0.72	0.66	Na	na	na	na	na	na	na
	Rw	1.3	1.4	1.5	Na	na	na	na	na	na	na
	HC	6.30	8.40	10.43	Na	na	na	na	na	na	na
Concrete	U	0.96	0.91	0.86	0.82	0.78	0.74	0.71	0.68	0.65	0.63
	Rw	1.0	1.1	1.2	1.2	1.3	1.4	1.4	1.5	1.5	1.6
	HC	7.20	9.60	12.00	14.40	16.80	19.20	21.60	24.00	26.40	28.80

Notes:
LW CMU is a Light Weight Concrete Masonry Unit per ASTM C 90 or 55, Calculated at 105 PCF density
MW CMU is a Medium Weight Concrete Masonry Unit per ASTM C 90 or 55, Calculated at 115 PCF density
NW CMU is a Normal Weight Concrete Masonry Unit per ASTM C 90 or 55, Calculated at 125 PCF density
Clay Brick is a Clay Unit per ASTM C 62, Calculated at 130 PCF density
Concrete is stuctural poured or precast concrete, Calculated at 144 PCF density
Calculations based on Energy Calculations and Data, CMACN, 1986
Values include air films on inner and outer surfaces.
Source: Berkeley Solar Group; Concrete Masonry Association of California and Nevada

Effective R-values for Interior Insulation Layers on Structural Mass Walls

Type Actual Thick	Frame	Furring space R-value without framing effects																					
		0	1	2	3	4	5	6	7	8	9	10	11	12	13	14	15	16	17	18	19	20	21
Any	None	0.5	1.5	2.5	3.5	4.5	5.5	6.5	7.5	8.5	9.5	10	11.5	12.5	13.5	14.5	15.5	16.5	17.5	18.5	19.5	20.5	21.5
0.5"	Wood	1.3	1.3	1.9	2.4	2.7	na	na	na	na	na	na	na	na	na	na	na	na	na	na	na	na	na
	Metal	0.9	0.9	1.1	1.1	1.2	na	na	na	na	na	na	na	na	na	na	na	na	na	na	na	na	na
0.75"	Wood	1.4	1.4	2.1	2.7	3.1	3.5	3.8	na	na	na	na	na	na	na	na	na	na	na	na	na	na	na
	Metal	1.0	1.0	1.3	1.4	1.5	1.5	1.6	na	na	na	na	na	na	na	na	na	na	na	na	na	na	na
1.0"	Wood	1.3	1.5	2.2	2.9	3.4	3.9	4.3	4.6	4.9	na	na	na	na	na	na	na	na	na	na	na	na	na
	Metal	1.0	1.1	1.4	1.6	1.7	1.8	1.8	1.9	1.9	na	na	na	na	na	na	na	na	na	na	na	na	na
1.5"	Wood	1.3	1.5	2.4	3.1	3.8	4.4	4.9	5.4	5.8	6.2	6.5	6.8	7.1	na	na	na	na	na	na	na	na	na
	Metal	1.1	1.2	1.6	1.9	2.1	2.2	2.3	2.4	2.5	2.5	2.6	2.6	2.7	na	na	na	na	na	na	na	na	na
2"	Wood	1.4	1.5	2.5	3.3	4.0	4.7	5.3	5.9	6.4	6.9	7.3	7.7	8.1	8.4	8.7	9.0	9.3	na	na	na	na	na
	Metal	1.1	1.2	1.7	2.1	2.3	2.5	2.7	2.8	2.9	3.0	3.1	3.2	3.2	3.3	3.3	3.4	3.4	na	na	na	na	na
2.5"	Wood	1.4	1.5	2.5	3.4	4.2	4.9	5.6	6.3	6.8	7.4	7.9	8.4	8.8	9.2	9.6	10.0	10.3	10.6	10.9	11.2	11.5	na
	Metal	1.2	1.3	1.8	2.3	2.6	2.8	3.0	3.2	3.3	3.5	3.6	3.6	3.7	3.8	3.9	3.9	4.0	4.0	4.1	4.1	4.1	na
3"	Wood	1.4	1.5	2.5	3.5	4.3	5.1	5.8	6.5	7.2	7.8	8.3	8.9	9.4	9.9	10.3	10.7	11.1	11.5	11.9	12.2	12.5	12.9
	Metal	1.2	1.3	1.9	2.4	2.8	3.1	3.3	3.5	3.7	3.8	4.0	4.1	4.2	4.3	4.4	4.4	4.5	4.6	4.6	4.7	4.7	4.8
3.5"	Wood	1.4	1.5	2.6	3.5	4.4	5.2	6.0	6.7	7.4	8.1	8.7	9.3	9.8	10.4	10.9	11.3	11.8	12.2	12.6	13.0	13.4	13.8
	Metal	1.2	1.3	2.0	2.5	2.9	3.2	3.5	3.8	4.0	4.2	4.3	4.5	4.6	4.7	4.8	4.9	5.0	5.1	5.1	5.2	5.2	5.3
4"	Wood	1.4	1.6	2.6	3.6	4.5	5.3	6.1	6.9	7.6	8.3	9.0	9.6	10.2	10.8	11.3	11.9	12.4	12.8	13.3	13.7	14.2	14.6
	Metal	1.2	1.3	2.0	2.6	3.0	3.4	3.7	4.0	4.2	4.5	4.6	4.8	5.0	5.1	5.2	5.3	5.4	5.5	5.6	5.7	5.8	5.8
4.5"	Wood	1.4	1.6	2.6	3.6	4.5	5.4	6.2	7.1	7.8	8.5	9.2	9.9	10.5	11.2	11.7	12.3	12.8	13.3	13.8	14.3	14.8	15.2
	Metal	1.2	1.3	2.1	2.6	3.1	3.5	3.9	4.2	4.5	4.7	4.9	5.1	5.3	5.4	5.6	5.7	5.8	5.9	6.0	6.1	6.2	6.3
5"	Wood	1.4	1.6	2.6	3.6	4.6	5.5	6.3	7.2	8	8.7	9.4	10.1	10.8	11.5	12.1	12.7	13.2	13.8	14.3	14.8	15.3	15.8
	Metal	1.2	1.4	2.1	2.7	3.2	3.7	4.1	4.4	4.7	5.0	5.2	5.4	5.6	5.8	5.9	6.1	6.2	6.3	6.5	6.6	6.7	6.8
5.5"	Wood	1.4	1.6	2.6	3.6	4.6	5.5	6.4	7.3	8.1	8.9	9.6	10.3	11.0	11.7	12.4	13.0	13.6	14.2	14.7	15.3	15.8	16.3
	Metal	1.3	1.4	2.1	2.8	3.3	3.8	4.2	4.6	4.9	5.2	5.4	5.7	5.9	6.1	6.3	6.4	6.6	6.7	6.8	7.0	7.1	7.2

All furring thickness values given are actual dimensions

All values include .5" gypbd. on the inner surface, interior surface resistances not included

24" OC Furring 24 Gage, Z-type Metal Furring Douglas-Fir Larch Wood Furring, density = 34.9 lb/cu.ft.

Insulation assumed to fill the furring space

[Source: Berkeley Solar Group; Concrete Masonry Association of California and Nevada]

Framed Floor/Ceiling and Wall Assemblies

Samples of framed floor, ceiling and wall assemblies with U-value calculations are located in Appendix H.

U-Value Calculation Procedure for Calculating Metal Framed Assemblies

For sample calculations of metal framed assemblies not found in Appendix H and all of the ASHRAE methods, including the parallel path, zonal method, and isothermal plane method, see Appendix B of the Nonresidential Manual. That section can be used to calculate the U-value of more complex assemblies or develop a better understanding of heat transfer through different types of construction assemblies.

Computer Modeling of Framed Assemblies

EZFrame can be purchased by ordering the following:

Publication No.:	P400-94-002R
Cost:	$14.00
Address:	California Energy Commission Publications, MS-13 P.O. Box 944295 Sacramento, CA 94244-2950

Construction Assembly Forms

Note: All of the following forms can be used for residential compliance.

ENV-3: Proposed Metal Framed Assembly

For most metal framed assemblies, the U-value will be found in Table B-2 in Appendix B (see Section 3.1.2E for a discussion of the use of this table). When there is no appropriate U-value in Table B-2, then this version of ENV-3 should be used to calculate the assembly U-value.

[Note that this form is not used to describe metal furring systems for insulating masonry or concrete walls; these are described in ENV-3 Masonry Assemblies.]

1. **PROJECT NAME** is the title of the project, as shown on the plans and known to the building department.

2. **DATE** is the date of preparation of the compliance submittal package. It should be on or after the date of the plans, and on or before the date of the building permit application.

A. Component Description

1. **SKETCH OF ASSEMBLY** - provide a simple cross-section sketch showing the arrangement of components in the assembly. The position of framing members and layers should be apparent. Number the layers in sequence from outside to inside as they will be described below (framing members are not numbered, only the cavity layers are considered here). Note that the outside of the assembly, facing unconditioned space, is at the left.
2. **ASSEMBLY NAME** - list the name or designator for this assembly as it is referred to on the plans and on the other compliance forms in the submittal, e.g. WALL-1, ROOF-2, or some other naming convention appropriate to the construction document organization.
3. **ASSEMBLY TYPE** - check the appropriate box.
4. **FRAMING MATERIAL** - must be metal for this form (other versions of ENV-3 are for other framing materials).
5. **FRAMING SIZE** - enter the nominal dimensions of the framing members, e.g. 3 1/2", 5 1/2", or other appropriate description.
6. **INSULATION R-VALUE** - enter the R-value of the insulation material in the assembly. If there is more than one insulation material, list each separately.

B. Construction Components

In this part of the form, the R-value of the cavity (the area of the wall that does not contain framing members) is calculated.

1. **DESCRIPTION** - list each layer of the assembly in sequence, from outside to inside, as numbered in the sketch above.

2. **CAVITY R-VALUE (R_c) -** enter the R-value of each layer. This value is taken from manufacturers' literature or from the *ASHRAE Handbook of Fundamentals Volume, 1993,* Chapter 22, Table 4, *Typical Thermal Properties of Common Building and Insulating Materials.* The R-values for the INSIDE and OUTSIDE SURFACE AIR FILMS are taken from Table 3-1, Standard Air Film R-values.

3. **METAL FRAMING FACTOR (MFF)** - enter the appropriate value for the assembly from Table 3-5 (Appendix B, Table B-4), or the table on the form.

4. **Rc X MFF** - multiply the SUBTOTAL R-value (R_c) for the cavity by the METAL FRAMING FACTOR and enter the result.

5. **INSULATING SHEATHING -** if there is a layer of insulating sheathing (other than the cavity insulation between the framing members), enter its R-value. Only values from *ASHRAE Handbook of Fundamentals Volume, 1993,* Table 3a, Chapter 23, may be used.

6. **TOTAL R-VALUE (R_t)** - add the previous two numbers and enter the result here.

7. **ASSEMBLY U-VALUE** - divide 1 by the TOTAL R-VALUE (R_t) to obtain the ASSEMBLY U-VALUE.

COMMENTS may be added to further explain the assembly or its U-value calculation. This would be especially helpful for unusual assemblies, and could help to expedite plan checking for energy compliance.

PROPOSED METAL FRAMED ASSEMBLY ENV-3

PROJECT NAME	DATE

COMPONENT DESCRIPTION

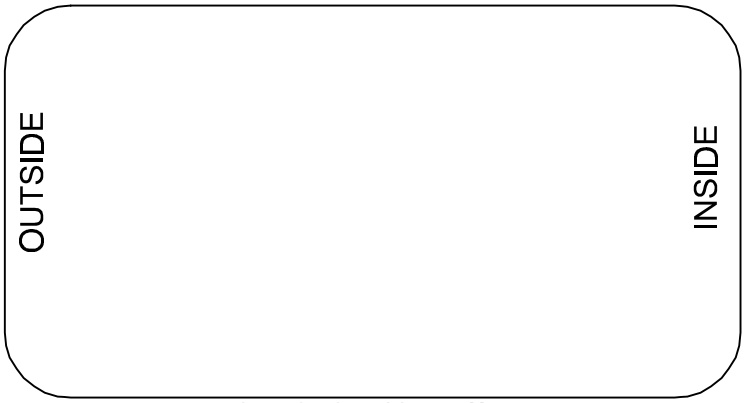

SKETCH OF ASSEMBLY

ASSEMBLY NAME

ASSEMBLY TYPE — **Floor** / **Wall** / **Ceiling/Roof**

FRAMING MATERIAL

FRAMING SIZE

FRAMING SPACING 16" o. c. ☐ 24" o. c. ☐

INSULATION R-VALUE

CONSTRUCTION COMPONENTS

	DESCRIPTION	CAVITY R-VALUE (Rc)
	OUTSIDE SURFACE AIR FILM	
1		
2		
3		
4		
5		
6		
7		
	INSIDE SURFACE AIR FILM	

SUBTOTAL		Rt
METAL FRAMING FACTOR		MFF
Rt × MFF		R-VALUE
INSULATING SHEATHING		R-VALUE
TOTAL R-VALUE		Rt
1/Rt		ASSEMBLY U-VALUE

METAL FRAMING FACTOR

Stud Spacing	Stud Depth	Insulation R-Value	Non-Mass Wall
16 o. c.	4"	R-7	0.522
		R-11	0.403
		R-13	0.362
		R-15	0.328
	6"	R-19	0.325
		R-21	0.300
		R-22	0.287
		R-25	0.263
24 o. c.	4"	R-7	0.577
		R-11	0.458
		R-13	0.415
		R-15	0.379
	6"	R-19	0.375
		R-21	0.348
		R-22	0.335
		R-25	0.308

COMMENTS

ENV-3: Proposed Masonry Wall Assembly

This version of ENV-3 should be used for masonry wall assemblies (including concrete block, brick and solid concrete). It is used in conjunction with Tables B-5 and B-6 in Appendix B, which give U-values and heat capacities for most common assemblies. It should also be used to account for the insulating qualities of insulating sheathing and/or furred sheathing layers attached to the masonry. Refer to Section 3.1.2F for further description of these calculations.

1. **PROJECT NAME** is the title of the project, as shown on the plans, on the ENV-1, and as known to the building department.

2. **DATE** is the date of preparation of the compliance submittal package. It should be on or after the date of the plans, and on or before the date of the building permit application.

A. Component Description

1. **SKETCH OF ASSEMBLY** - provide a simple cross-section sketch showing the arrangement of components in the assembly. The position of any furring members and sheathing layers should be apparent. Note that the outside of the assembly, facing unconditioned space, is at the left.

2. **WALL ASSEMBLY NAME** - list the name or designator for this wall assembly as it is referred to on the plans and on the other compliance forms in the submittal, e.g. WALL-1, or some other naming convention appropriate to the construction document organization.

3. **DESCRIPTION OF ASSEMBLY** - provide a brief description of the materials used in the assembly to augment the sketch.

B. Wall R-value and Heat Capacity

This section is used to extract values of wall R-value and heat capacity from Tables B-5 or B-6 in Appendix B.

1. **WALL UNIT THICKNESS** - enter the nominal thickness, in inches, of the masonry wall.

2. **MATERIAL TYPE** - enter the material type. For concrete block, this can be “light weight”, “medium weight”, or “normal weight” as per ASTM designations.

3. **CORE TREATMENT** - this is only applicable to hollow core masonry units; the choices are solid grouted cores, or partially grouted cores with the unfilled cells either empty or filled with any type of insulation.

4. **WALL R-VALUE (R_w)** - for hollow masonry, use Table B-4; for solid unit masonry or solid concrete walls, use Table B-5. Select the appropriate R-value and enter it here (see Section 3.1.2F for more discussion).

5. **WALL HEAT CAPACITY (HC)** - for hollow masonry, use Table B-4; for solid unit masonry or solid concrete walls, use Table B-5. Select the appropriate HC value and enter it here (see Section 3.1.2H for more discussion).

C. Furring/Insulation Layer

This section is used to describe any furring/insulation layers or insulating sheathing attached to either the inside or the outside of the masonry.

1. **FURRING FRAMING MATERIAL** - list the type of material (wood, metal) used for the furring strips; if not applicable enter "none".

2. **FURRING FRAMING SIZE** - enter the thickness, width, and depth, in actual inches, of the framing members used for furring, and its actual dimensions in inches.

3. **FURRING SPACE INSULATION** - enter the type of insulation installed in the space between furring strips (fiberglass batt, bead board, etc.), and its R-value at the installed thickness.

4. **EXTERIOR INSULATING LAYER** - if there is an exterior insulating layer, list the type of insulation (bead board, polyisocyanurate board, etc.), and its R-value at the installed thickness.

5. **FURRING ASSEMBLY EFFECTIVE R-VALUE** - using the information above, enter Table B-6 and locate the effective R-value of the furring assembly (see Section 3.1.2F).

6. **INSULATION LAYER R-VALUE (R_f)** - add the FURRING ASSEMBLY EFFECTIVE R-VALUE to the R-value of the exterior insulating layer to arrive at the INSULATION LAYER R-VALUE (R_f).

D. Wall Assembly R-value and U-value

1. **WALL ASSEMBLY R-VALUE (R_t)** - add the INSULATION LAYER R-VALUE calculated above (R_f) to the WALL R-VALUE (R_w) from above to obtain the WALL ASSEMBLY R-VALUE.

2. **WALL ASSEMBLY U-VALUE** - calculate the inverse of the WALL ASSEMBLY R-VALUE ($1/R_t$) to obtain the WALL ASSEMBLY U-VALUE.

PROPOSED MASONRY WALL ASSEMBLY ENV-3

PROJECT NAME	DATE

COMPONENT DESCRIPTION

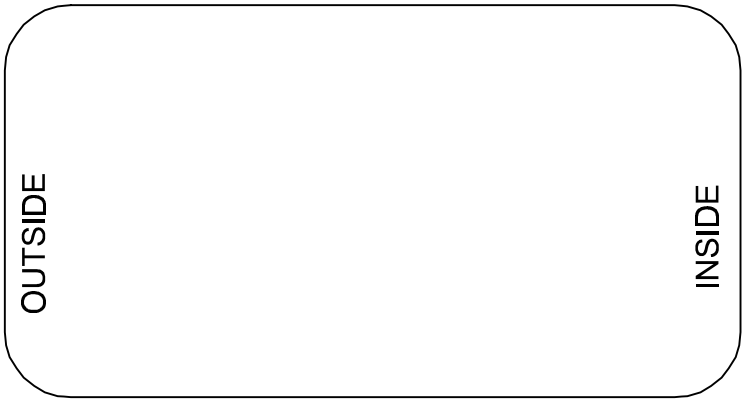

SKETCH OF ASSEMBLY

ASSEMBLY NAME	
DESCRIPTION OF ASSEMBLY	

WALL R-VALUE and HEAT CAPACITY

WALL UNIT THICKNESS		NOMINAL INCHES
MATERIAL TYPE		(LW CMU,MW CMU, NW CMU, CLAY UNIT, CLAY BRICK, CONCRETE.)
CORE TREATMENT		(SOLID, GROUTED, EMPTY, INSULATED, NA)
WALL R-VALUE		Rw (FROM TABLE B-4 or B-5)
WALL HEAT CAPACITY		HC (FROM TABLE B-4 or B-5)

FURRING/INSULATION LAYER (INSIDE and/or OUTSIDE IF ANY)

FURRING FRAMING MATERIAL		(WOOD, METAL, NONE)		
FURRING FRAMING SIZE		NOMINAL INCHES		ACTUAL INCHES
FURRING SPACE INSULATION		TYPE		R-VALUE
EXTERIOR INSULATING AREA		TYPE		R-VALUE

FURRING ASSEMBLY EFFECTIVE R-VALUE		**EXTERIOR INSULATING LAYER R-VALUE**		**INSULATION LAYER R-VALUE**
	+		=	Rf
(FROM TABLE B-7)		(FROM MANUFACTURER)		

WALL ASSEMBLY R-VALUE and U-VALUE

INSULATION LAYER R-VALUE		**WALL R-VALUE**		**WALL ASSEMBLY R-VALUE**		**WALL ASSEMBLY U-VALUE**
	+		=		→	
Rf		**Rw**		**Rt**		**1/Rt**

ENV-3: Proposed Wood Frame Assembly

This version of ENV-3 should be used for any construction assembly which is not found in the tables in Appendix B or appropriate for the metal framed or masonry versions of ENV-3. This form guides the user through the basic U-value calculation, the Parallel Path Method (discussed in Section 3.1.2D), and the heat capacity calculation (see Section 3.1.2H). If the proposed wood-framed floor or ceiling assembly is one of the Standard Framed Floor/Ceiling Assembly types shown in Table B-3 of Appendix B, it is not necessary to submit Form ENV-3 "Proposed Construction Assembly". Instead, the "Reference Name" for the appropriate assembly is entered into either Form ENV-2 "Envelope Component Method" or ENV-2 Part 2 "Overall Envelope Method", whichever is applicable for the compliance method that the designer has selected. Refer to the specific sections in the Manual which provide instructions for filling out the respective forms, as to how the Reference Name of the assembly should be entered.

1. **PROJECT NAME** is the title of the project, as shown on the plans, on the ENV-1, and as known to the building department.

2. **DATE** is the date of preparation of the compliance submittal package. It should be on or after the date of the plans, and on or before the date of the building permit application.

A. Component Description

1. **SKETCH OF ASSEMBLY** - provide a simple cross-section sketch showing the arrangement of components in the assembly. The position of framing members and layers should be apparent. Number the layers in sequence from outside to inside as they will be described below (framing members are not numbered, only the cavity layers are considered here). Note the outside of the assembly, facing unconditioned space, is at the left of the sketch.

2. **ASSEMBLY NAME** - list the name or designator for this assembly as it is referred to on the plans and on the other compliance forms in the submittal, e.g. WALL-1, ROOF-2, or some other naming convention appropriate to the construction document organization.

3. **ASSEMBLY TYPE** - check the appropriate box.

4. **FRAMING MATERIAL** - with this form framing material is wood only (other versions of ENV-3 are for other materials).

5. **FRAMING SIZE** - enter the nominal dimensions of the framing members, e.g. 2x4, 4x8, or other appropriate description.

6. **FRAMING PERCENTAGE** - choose the appropriate value from the small table to the right. For example, a floor assembly with joists spaced 24" on center (o.c.) would have a framing percentage of 7%.

B. Construction Components

In this part of the form, the R-value of the cavity (the area of the assembly that does not contain framing members) and the R-value of the assembly through the wood framing are calculated. The U-value of the assembly is also calculated.

1. **DESCRIPTION** - list each layer of the assembly in sequence, from outside to inside, as numbered in the sketch above.

2. **CAVITY R-VALUE (R_c) -** enter the R-value of each layer at a cross-section taken through the cavity. This value is taken from manufacturer's literature or from *the ASHRAE Handbook of Fundamentals Volume, 1993,*

(Chapter 22, Table 4, *Typical Thermal Properties of Common Building and Insulating Materials*) data reproduced in Appendix B, Table B-1. The R-values for the INSIDE and OUTSIDE SURFACE AIR FILMS are taken from Table 3-1, Standard Air Film R-values.

3. **WOOD FRAME R-VALUE (R_f)** - enter the R-value of each layer at a cross-section taken through a framing member. These values are found in the same sources cited in the previous paragraph.

HEAT CAPACITY (HC) - As an option, the HC of the assembly may also be calculated, although for most framed assemblies the HC will be too low to be of significance (HC values of less than 7 are not given any special consideration under the *Standards*).

4. **WALL WEIGHT -** enter the weight of each layer of the assembly, per square foot of the material at its given thickness. This is calculated from the density of the material, which is given in pounds per cubic foot. See Table 3-11 for typical values; they may also be taken from manufacturers literature or other standard reference works, such as the *ASHRAE Handbook of Fundamentals Volume, 1993*, Chapter 22 Table 4 (Appendix B). Dividing the density by 12 and multiplying by the material thickness (in inches) yields the WALL WEIGHT. For the framing material, the weight of the framing members must be converted to a pounds per square foot value.

5. **SPECIFIC HEAT** - enter the specific heat of each material, in Btu/°F-lb. These values are also found in ASHRAE Table 4 (see previous paragraph).

6. **HC** - columns A and B are multiplied together to obtain the heat capacity for each layer of the assembly.

   SUBTOTALS - both R-value columns are summed. If calculated, the HC column is also summed to obtain the TOTAL HC for the assembly.

ASSEMBLY U-VALUE - the appropriate values from above on this form are entered into the equation and the result calculated. Rc is the subtotal of the CAVITY R-VALUE column; R_f is the subtotal of the WOOD FRAME R-VALUE column. Fr% is the FRAMING PERCENTAGE. Care should be taken to recognize the parentheses in the calculation.

PROPOSED WOOD FRAME ASSEMBLY ENV-3

PROJECT NAME	DATE

COMPONENT DESCRIPTION

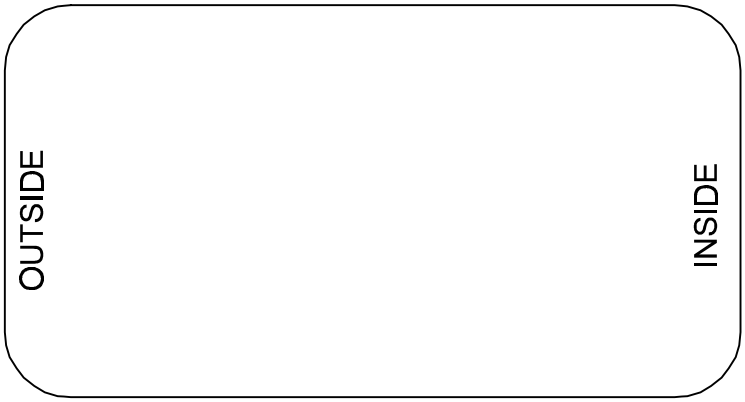

SKETCH OF ASSEMBLY

ASSEMBLY NAME

ASSEMBLY TYPE (check one)
- **Floor**
- **Wall**
- **Ceiling/Roof**

FRAMING MATERIAL

FRAMING SIZE

Fr %: _____

FRAMING PERCENTAGE

15% (16" o. c. Wall
12% (24" o. c. Wall)
10% (16" o. c. Floor/Ceil.)
7% (24" o. c. Floor/Ceil.)

CONSTRUCTION COMPONENTS

	DESCRIPTION	R-VALUE: CAVITY R-VALUE (Rc)	R-VALUE: WOOD FRAME R-VALUE	A: WALL WEIGHT lbs/sf	B: SPECIFIC HEAT (Btu/F°•lbs)	HC (A×B) (Btu/F°•sf)
	OUTSIDE SURFACE AIR FILM					
1						
2						
3						
4						
5						
6						
7						
	INSIDE SURFACE AIR FILM					
	SUBTOTAL				**TOTAL HC**	
		Rc	Rf			

[ ] x [ ] + [ ] x [ ] = [ ]

1/Rc | **1 - (Fr%/100)** | **1/Rf** | **Fr%/100** | **ASSEMBLY U-VALUE**

COMMENTS

Appendix J
Procedure for Determining the Seasonal Energy Efficiencies of Residential Air Distribution Systems

This appendix contains a copy of Appendix F from the Residential Alternative Calculation Method (ACM) Approval Manual that describes the procedures for determining the seasonal efficiencies of HVAC air distribution (duct) systems.

.

Standard Procedure for Determining the Seasonal Energy Efficiencies of Residential Air Distribution Systems

1.0 Introduction

This appendix describes the measurement and calculation methods for determining air distribution system efficiency.

2.0 Definitions

aerosol sealant closure system*:* A method of sealing leaks by blowing aerosolized sealant particles into the duct system and which must include minute-by-minute documentation of the sealing process.

floor area :The floor area of enclosed conditioned space on all floors of a building, as measured at the floor level of the exterior surfaces enclosing the conditioned space.

delivery effectiveness :The ratio of the thermal energy delivered to the conditioned space and the thermal energy entering the distribution system at the equipment heat exchanger.

distribution system efficiency :The ratio of the thermal energy consumed by the equipment with the distribution system to the energy consumed if the distribution system had no losses or impact on the equipment or building loads.

equipment efficiency :The ratio between the thermal energy entering the distribution system at the equipment heat exchanger and the energy being consumed by the equipment.

equipment factor : F_{equip} is the ratio of the equipment efficiency including the effects of the distribution system to the equipment efficiency of the equipment in isolation.

fan flowmeter device*:* A device used to measure air flow rates under a range of test pressure differences.

flowhood**:** A device used to capture and measure the airflow at a register.

load factor : F_{load} is the ratio of the building energy load without including distribution effects to the load including distribution system effects.

pressure pan : a device used to seal individual forced air system registers and to measure the static pressure from the register.

radiant barrier : a surface of low emissivity (less than 0.05) placed inside an attic or roof space to reduce radiant heat transfer.

recovery factor : F_{recov} is the fraction of energy lost from the distribution system that enters the conditioned space.

thermal regain: The fraction of delivery system losses that are returned to the building.

3.0 Nomenclature

a_r = duct leakage factor (1-return leakage) for return ducts
a_s = duct leakage factor (1-supply leakage) for supply ducts
A_{floor} = conditioned floor area of building , ft^2
$A_{r,out}$ = surface area of return duct outside conditioned space ,ft^2
$A_{r,attic}$ = return duct area in attic , ft^2
$A_{r,base}$ = return duct area in basement , ft^2
$A_{r,crawl}$ = return duct area in crawlspace, ft^2
$A_{r,gar}$= return duct area inside garage, ft^2
$A_{s,out}$ = surface area of supply duct outside conditioned space,ft^2
$A_{s,attic}$ = supply duct area in attic , ft^2
$A_{s,base}$ = supply duct area in basement , ft^2
$A_{s,crawl}$ = supply duct area in crawlspace,ft^2
$A_{s,gar}$ = supply duct area inside garage, ft^2
$A_{s,in}$ = supply duct area inside conditioned space, ft^2
B_r = conduction fraction for return
B_s = conduction fraction for supply
DE = delivery effectiveness
DE_{design} = design delivery effectiveness
$DE_{seasonal}$ = seasonal delivery effectiveness
E_{equip} = rate of energy exchanged between equipment and delivery system, Btu/hour
$F_{cycloss}$ = cyclic loss factor
F_{equip} = load factor for equipment
F_{flow} = load factor for fan flow effect on equipment efficiency
F_{leak} = fraction of system fan flow that leaks out of supply or return ducts
F_{load} = load factor for delivery system
F_{recov} = thermal loss recovery factor
F_{regain} = thermal regain factor
K_r = return duct surface area coefficient
K_s = supply duct surface area coefficient
N_{story} = number of stories of the building
P_{sp} = pressure difference between supply plenum and conditioned space [Pa]
P_{test} = test pressure for duct leakage [Pa]
Q_e = Flow through air handler fan at operating conditions, cfm
$Q_{total,25}$ = total duct leakage at 25 Pascal, cfm
R_r = thermal resistance of return duct, h ft^2 F/Btu
R_s = thermal resistance of supply duct, h ft^2 F/Btu
$T_{amb,r}$ = ambient temperature for return , F
$T_{amb,s}$ = ambient temperature for supply , F
T_{attic} = attic air temperature , F
T_{base} - return duct temperature in basement, F
T_{crawl} - return duct temperature in crawlspace,F
T_{design} = outdoor air design temperature , F
T_{ground} = ground temperature , F
T_{gar} = temperature of garage air , F
T_{in} = temperature of indoor air , F
T_{rp} = return plenum air temperature , F
$T_{seasonal}$ = outdoor air seasonal temperature, F
T_{sp} = supply plenum air temperature , F
ΔT_e = temperature rise across heat exchanger , F
ΔT_r = temperature difference between indoors and the ambient for the return , F
ΔT_s = temperature difference between indoors and the ambient for the supply,
$\eta_{ist,seasonal}$ = seasonal distribution system efficiency

4.0 Air Distribution Diagnostic Measurement and Default Assumptions

4.1 Instrumentation Specifications

The instrumentation for the air distribution diagnostic measurements shall conform to the following specifications:

4.1.1 Pressure Measurements

All pressure measurements shall be measured with measurement systems (i.e. sensor plus data acquisition system) having an accuracy of ± 0.2 Pa. All pressure measurements within the duct system shall be made with static pressure probes.

4.1.2 Fan Flow Measurements

All measurements of distribution fan flows shall be made with measurement systems (i.e. sensor plus data acquisition system) having an accuracy of ± 5% reading or ± 5 cfm whichever is greater.

4.1.3 Duct Leakage Measurements

The measurement of air flows during duct leakage testing shall have an accuracy of ± 3% of measured flow using digital gauges.

All instrumentation used for fan flow and duct leakage diagnostic measurements shall be calibrated according to the manufacturer's calibration procedure to conform to the above accuracy requirement. All testers performing diagnostic tests shall obtain evidence from the manufacturer that the equipment meets the accuracy specifications. The evidence shall include equipment model, serial number, the name and signature of the person of the test laboratory verifying the accuracy, and the instrument accuracy. All diagnostic testing equipment is subject to re-calibration when the period of the manufacturer's guaranteed accuracy expires.

4.2 Apparatus

4.2.1 System Fan Flows

HVAC system fan flow shall be measured using one of the following methods.

4.2.1.1 Plenum pressure matching measurement

The apparatus for measuring the system fan flow shall consist of a duct pressurization and flow measurement device (subsequently referred to as a fan flowmeter [see section 4.3.7.2.2.]) meeting the specifications in 4.1.3, a static pressure transducer meeting the specifications in Section 4.1.1, and an air barrier between the return duct system and the air handler inlet. The measuring device shall be attached at the air handler blower compartment door. All registers shall be in their normal operating condition. The static pressure probe shall be fixed to the supply plenum so that it is not moved during this test.

4.2.1.2 Flow hood measurement

A flow hood meeting the specifications in section 4.1.2. can be used to verify the fan flow at the return register(s) after the completion of a rough-in duct leakage measurement. All registers shall be in their normal operating position. Measurement(s) shall be taken at the return grill(s).

4.2.2 Duct Leakage

The apparatus for fan pressurization duct leakage measurements shall consist of a duct pressurization and flow measurement device meeting the specifications in Section 4.1.3.

4.3 Procedure

The following sections identify input values for building and HVAC system (including ducts) using either default or diagnostic information.

4.3.1 Building Information

The calculation procedure for determining air distribution efficiencies requires the following building information:

1. climate zone for the building,
2. conditioned floor area,
3. number of stories,
4. supply duct location and
5. floor type.

4.3.1.1 Default Input

Using default values rather than diagnostic procedures produce relatively low air distribution-system efficiencies. Default values shall be obtained from following sections:

1. the location of the duct system in Section 4.3.4,
2. the surface area and insulation level of the ducts in Sections 4.3.3, 4.3.4 and 4.3.6,
3. the system fan flow in Section 4.3.7, and
4. the leakage of the duct system in Section 4.3.8.

4.3.2 Diagnostic Input

Diagnostic inputs are used for the calculation of improved duct efficiency. The diagnostics include observation of various duct characteristics and measurement of duct leakage and system fan flows as described in Sections 4.3.5 through 4.3.8. These observations and measurements replace those assumed as default values.

The diagnostic procedures include

- measure supply duct surface area as described in Section 4.3.3.2.
- measure total duct system leakage as described in Section 4.3.8.
- measure system fan flow or observe the presence of a thermostatic expansion valve for claiming ACCA manual D design credit as described in Section 4.3.7.
- Observe the insulation level for the supply (R_s) and return (R_r) ducts outside the conditioned space as described in Section 4.3.6.
- Observe the presence of radiant barriers.

4.3.3 Duct Surface Area

The supply-side and return-side duct surface areas shall be calculated separately. If the supply or return duct is located in more than one zone, the area of that duct in each zone shall be calculated separately. The duct surface area shall be determined using the following methods.

4.3.3.1 Default Duct Surface Area

4.3.3.1.1 Duct Surface Area for More Than 12 feet of Duct Outside Conditioned Space

The default duct surface area for supply and return shall be calculated as follows:
For supplies:

$$A_{s,total} = 0.27A_{floor} \quad (4.1)\ 1$$

For returns:

$$A_{r,total} = K_r \ A_{floor} \quad (4.2)$$

Where K_r (return duct surface area coefficient) shall be 0.05 for one story building and 0.1 for two or more stories.

4.3.3.1.1 Duct Surface Area for Less Than 12 feet of Duct Outside Conditioned Space

For HVAC systems with air handlers located outside the conditioned space but with less than 12 feet of duct located outside the conditioned space including air handler and plenum, the duct surface area outside the conditioned space shall be calculated as follows:

$$A_{s,out} = 0.027\ A_{floor} \quad (4.3)$$

Where $A_{s,out}$ is substituted for $A_{s,attic}$; $A_{s,crawl}$; or $A_{s,base}$ depending on the location of the ducts.

4.3.3.2 Diagnostic Duct Surface Area

A well designed duct system can reduce the length of the supply duct. Smaller duct surface area will result in reduced duct conduction losses. Duct surface area shall be calculated from measured duct lengths and nominal outside diameters (for round ducts) or outside perimeters (for rectangular ducts) of each duct run in the building. Improved conduction losses can be claimed for reduced supply duct surface area only (it does not apply to the return duct). Supply plenum surface area shall be included in the supply duct surface area. Diagnostic duct surface area requires measuring duct surface areas separately for each location outside conditioned space ($A_{s,attic}$; $A_{s,crawl}$; or $A_{s,base}$) and the system fan flow to ensure that there is sufficient air flow to deliver the designed heating and cooling loads.

4.3.4 Duct Location

Duct location determines the external temperature for duct conduction losses, the temperature for return leaks, and the thermal regain of duct losses. Default duct surface areas by locations of the supply duct shall be obtained from Table 4.1. The default duct surface area for crawlspace and basement applies only to buildings with all supply ducts installed in the crawlspace or basement. If the supply duct is installed in locations other than crawlspace or basement, the default supply duct location shall be "Other".

If ducts are installed in multiple locations, air distribution efficiency shall be calculated for each duct location. Total air distribution efficiency for the house shall be the weighted average based on the floor area served by each duct system.

Table 4.1 Default Assumptions for Duct Locations				
	Supply Duct Surface Area		Return Duct Surface Area	
Supply or Return Duct Location	One story	Two or more story	One story	Two or more story
Attic	100% attic	65% attic 35% conditioned space	100% attic	100% attic
Crawlspace	100% crawlspace	65% crawlspace 35% conditioned space	100% attic	100% attic
Basement	100% Basement	65% basement 35% conditioned space	100% Basement	100% Basement
Other	100% attic	65% attic 35% conditioned space	100% attic	100% attic

4.3.5 Climate and Duct Ambient Conditions for Ducts Outside Conditioned Space

Duct ambient temperature for both heating and cooling at different duct locations shall be obtained from Table 4.2. Indoor dry-bulb (T_{in}) temperature for cooling is 78°F. The indoor dry-bulb temperature for heating is 70°F. Reduction of attic temperature and the reduction in solar radiation effect due to radiant barriers shall only be applied to cooling calculations. The procedures for the installation of radiant barriers shall be as described in ACM Section 4.23. Attic temperatures for houses with radiant barriers shall be obtained from Table 4.2.

Table 4.2 Default Assumptions for Duct Ambient Temperature								
	Duct Ambient Temperature for Heating, $T_{heat,amb}$			Duct Ambient Temperature for Cooling, $T_{cool,amb}$				
Climate zone	**Attic**	**Crawlspace**	**Basement**	**Attic**	**Attic w/ radiant barrier (supply)**	**Attic w/ radiant barrier (return)**	**Crawlspace**	**Basement**
1	52.0	52.2	48.9	60.0	65.4	61.2	54.0	49.1
2	48.0	48.7	56.5	87.0	84.3	84.2	78.0	64.5
3	55.0	54.9	58.3	80.0	79.4	78.2	71.8	62.8
4	53.0	53.1	56.6	79.0	78.7	77.4	70.9	61.4
5	49.0	49.6	52.3	74.0	75.2	73.1	66.4	56.8
6	57.0	56.7	59.9	81.0	80.1	79.1	72.7	64.1
7	62.0	61.1	60.4	74.0	75.2	73.1	66.4	61.6
8	58.0	57.6	60.1	80.0	79.4	78.2	71.8	63.9
9	53.0	53.1	59.6	87.0	84.3	84.2	78.0	66.4
10	53.0	53.1	61.1	91.0	87.1	87.6	81.6	68.9
11	48.0	48.7	59.5	95.0	89.9	91.0	85.1	69.5
12	50.0	50.4	59.3	91.0	87.1	87.6	81.6	67.8
13	48.0	48.7	58.4	92.0	87.8	88.4	82.4	67.6
14	39.0	40.7	55.4	99.0	92.7	94.4	88.7	68.6
15	50.0	50.4	63.4	102.	94.8	96.9	91.3	74.6
16	32.0	34.4	43.9	80.0	79.4	78.2	71.8	54.1

4.3.6 Duct Wall Thermal Resistance

4.3.6.1 Default Duct Insulation R value

Default duct wall thermal resistance is R4.2. An air film resistance of 0.7 [h ft^2 ^oF/BTU] shall be added to the duct insulation R value to account for external and internal film resistance.

4.3.6.2 Diagnostic Duct Wall Thermal Resistance

Duct wall thermal resistance shall be determined from the manufacturer's specification observed during diagnostic inspection. If ducts with multiple R values are installed, the lowest duct R value shall be used. If a duct with a higher R value than 4.2 is installed, the R-value shall be clearly stated on the building plan and a visual inspection of the ducts must be performed to verify the insulation values. In case the space on top of the duct boot is limited and can not be inspected, the insulation R value within two feet of the boot to which the duct is connected may be excluded from the determination of the overall system R value.

4.3.7 System Fan Flow

4.3.7.1 Default Fan Flow

The default cooling fan flow with an air conditioner and for heating with a heat pump for **climate zones 8 through 15** shall be calculated as follows:

$$Q_e = 0.70\ A_{floor} \quad (4.4)$$

The default cooling fan flow with an air conditioner and for heating with a heat pump for **climate zones 1 through 7 and 16** and default heating fan flow for forced air furnaces for all climate zones shall be calculated as follows:

$$Q_e = 0.50\ A_{floor} \quad (4.5)$$

4.3.7.2 Diagnostic Fan Flow

To obtain duct efficiency credit for duct systems designed according to ACCA Manual D, a diagnostic fan flow measurement must be performed or the installation of a thermostatic expansion valve must be verified. The access panel on the cooling coil shall be removable for the verification of a thermostatic expansion valve. For ACCA Manual D designed duct system, engineering calculations and the building plan for duct sizing and layout shall also be prepared. The diagnostic fan flow shall be measured using one of the following methods:

4.3.7.2.1 Diagnostic Fan Flow Using Flow Hood:

To measure the system return fan flow, all registers shall be fully open, and the air filter shall be installed. Turn on the system fan and measure the fan flow at the return grille(s) with a calibrated flow hood to determine the total system return fan flow. The system fan flow (Q_e) shall be the sum of the measured return flows.

4.3.7.2.2 Diagnostic Fan Flow Using Plenum Pressure Matching:

The fan flow measurement shall be performed using the following procedures:

1. With the system fan on (in heating mode with burners on for heating, or in cooling mode with compressor on), measure the pressure difference (in pascal) between the supply plenum and the conditioned space (ΔP_{sp}). P_{sp} is the target pressure to be maintained during the fan flow tests. If there is no access to the supply plenum, then place the pressure probe in the nearest supply duct. Adjust the probe to achieve the highest pressure and then firmly attach the probe (e.g., with duct tape) to ensure that it does not move during the fan flow test.
2. Block the return duct from the plenum upstream of the air handler fan and the fan flowmeter. Filters are often located in an ideal location for this blockage.
3. Attach the fan flowmeter device to the duct system at the air handler. For many air handlers, there will be a removable section that allows access to the fan that is suitable for this purpose. Assure that there is no significant leakage between the fan flowmeter and the system fan.
4. If the fan flowmeter is connected to the air handler outside the conditioned space, then the door or access panel between the conditioned space and the air handler location shall be opened.
5. Turn on the system fan and the fan flowmeter, adjust the fan flowmeter until the pressure between supply plenum and conditioned space matches P_{sp}.
6. Record the flow through the flowmeter (Q_e, cfm) - this is the diagnostic fan flow.

In some systems, typical system fan and fan flowmeter combinations may not be able to produce enough flow to reach P_{sp}. In this case record the maximum flow (Q_{max}, cfm) and pressure (P_{max}) between the supply plenum and the conditioned space. The following equation shall be used to correct measured system flow and pressure (Q_{max} and P_{max}) to operating condition (Q_e) at operating pressure (P_{sp}).

$$Q_e = Q_{max}\left(\frac{P_{sp}}{P_{max}}\right)^{\frac{1}{2}} \quad (4.6)$$

4.3.8 Duct Leakage

4.3.8.1 Duct Leakage Factor for Delivery Effectiveness Calculations

Default duct leakage factors shall be obtained from Table 4.3, using the "not Tested" values.

Duct leakage factors shown in Table 4.3 shall be used in calculations of delivery effectiveness.

Table 4.3 Duct Leakage Factors

	Duct Leakage Diagnostic Test Performed using Section 4.3.8.2 Procedures	$a_s = a_r =$
Duct systems in homes built prior to April 1, 1999	Not tested	0.86
Duct systems in homes built on or after April 1, 1999	Not tested	0.89
Duct systems in homes of all ages, System with refrigerant based cooling, tested after house and HVAC system completion	(Q_{25}) Total leakage is less than 0.06 Q_{ecool}	0.96
Duct systems in homes of all ages, System without refrigerant based cooling, tested after house and HVAC system completion	(Q_{25}) Total leakage is less than 0.06 Q_{eheat}	0.96
Duct systems with refrigerant based cooling, in homes built on or after April 1, 1999, System tested with air handler installed, but prior to installation of the interior finishing wall	(Q_{25}) Total leakage is less than 0.06 Q_{ecool} and final duct integrity verified	0.96
Duct systems without refrigerant based cooling, in homes built on or after April 1, 1999, System tested with air handler installed, but prior to installation of the interior finishing wall	(Q_{25}) Total leakage is less than 0.06 Q_{eheat} and final duct integrity verified	0.96
Duct systems with refrigerant based cooling, in homes built on or after April 1, 1999, System tested without air handler installed, but prior to installation of the interior finishing wall	(Q_{25}) Total leakage is less than 0.04 Q_{ecool} and final duct integrity verified	0.96
Duct systems without refrigerant based cooling, in homes built on or after April 1, 1999, System tested without air handler installed, but prior to installation of the interior finishing wall	(Q_{25}) Total leakage is less than 0.04 Q_{eheat} and final duct integrity verified	0.96

4.3.8.2 Diagnostic Duct Leakage

Diagnostic duct leakage measurement is used to quantify total leakage for the calculation of air distribution efficiency. To obtain the improved duct efficiency for sealing the duct system, a diagnostic leakage test as described in section 4.3.8.2.1 or 4.3.8.2.2 must be performed. Houses built on or after

4/1/1999 shall not be allowed to claim duct leakage credit and diagnostic testing may not be done on any HVAC system that uses building cavities such as plenums or a platform return.

4.3.8.2.1 Diagnostic Duct Leakage from Fan Pressurization of Ducts

The total duct leakage shall be determined by pressurizing the ducts to 25 Pascals. The following procedure shall be used for the fan pressurization tests:

1. Seal all the supply and return registers, except for one return register or the system fan access.
2. Attach the fan flowmeter device to the duct system at the unsealed register or access door.
3. Install a static pressure probe at a supply.
4. Adjust the fan flowmeter to produce a 25 Pascal (0.1 in water) pressure difference between the supply duct and the outside or the building space with the entry door open to the outside.
5. Record the flow through the flowmeter ($Q_{total,25}$) - this is the total duct leakage flow at 25 Pascals.

When the diagnostic leakage test is performed and the measured total duct leakage is less than 6% of the total fan flow, the duct leakage factor shall be 0.96 as shown in Table 4.3.

4.3.8.2.2 Diagnostic Duct Leakage at Rough-in Construction Stage Using An Aerosol Sealant Closure System

Duct leakage in new construction may be determined by using diagnostic measurements at the rough-in building construction stage prior to installation of the interior finishing wall when using an aerosol sealant closure system. When using this measurement technique, additional verification (as described in section 4.3.8.2.2.3) of duct integrity shall be completed after the finishing wall has been installed. In addition, after the finishing wall is installed, spaces between the register boots and the wallboard shall be sealed. Cloth backed rubber adhesive duct tapes shall not be used to seal the space between the register boot and the wall board.

The duct leakage measurement at rough-in construction stage shall be performed using a fan pressurization device. The duct leakage shall be determined by pressurizing both the supply and return ducts to 25 Pa. The procedures in Sections 4.3.8.2.2.1 and 4.3.8.2.2.2 shall be used for measuring duct leakage before the interior finishing wall is installed.

4.3.8.2.2.1 For ducts with the air handling unit installed and connected:

For total leakage:

1. Verify that supply and return plenums and all the connectors, transition pieces and duct boots have been installed. If a platform is used as part of the air distribution system, it must contain a duct, and all return connectors and transition parts shall be installed and sealed. The platform, duct and connectors shall be included in the total leakage test.
2. Seal all the supply duct boots and return boxes except for one return duct box.
3. Attach the fan flowmeter device at the unsealed duct box.
4. Insert a static pressure probe at one of the sealed supply duct boots.
5. Adjust the fan flowmeter to maintain 25 Pa(0.1 in water)between the duct system and outside or the building space with the entry door open to the outside.
6. Record the air flow through the flowmeter ($Q_{total,25}$) - This is the total duct leakage at 25 Pa at rough-in stage.
7. Divide the measured total leakage by the total fan flow calculated from equation 4.4 or 4.5.

If the total leakage is less than 6% of the total fan flow, the duct leakage factor shall be 0.96 as shown in Table 4.3.

4.3.8.2.2.2 For ducts with air handling unit not yet installed:

For total leakage:

1. Verify that all the connectors, transition pieces and duct boots have been installed. If a platform is used as part of the air distribution system, it must contain a duct, and all return connectors and transition parts shall be installed and sealed. The platform, duct and connectors shall be included in the total leakage test.
2. Use a duct connector to connect supply and/or return duct box to the fan flowmeter. Supply and return leaks may be tested separately. If there is only one return register, the supply and return leaks shall be tested at the same time.
3. Seal all the supply duct boots and/or return boxes except for one supply or return duct box.
4. Attach the fan flowmeter device at the unsealed duct box.
5. Insert a static pressure probe at one of the sealed supply duct boots.
6. Adjust the fan flowmeter to maintain 25 Pa (0.1 in water) between the building conditioned space and the duct system.
7. Record the air flow through the flowmeter ($Q_{total,25}$) - This is the total duct leakage at 25 Pa.
8. Divide the measured total leakage by the total fan flow calculated from equation 4.4 or 4.5. If the total leakage is less than 4% of the total fan flow, the total duct leakage factor shall be 0.96 as shown in Table 4.3.

4.3.8.2.2.3 Post rough-in duct leakage verification

After installing the interior finishing wall and verifying that one of the above rough-in tests was completed, one of the following post rough-in verification tests shall be performed to ensure that there is no major leakage in the duct system.

4.3.8.2.2.3.1 Visual inspection

Remove at least one supply and one return register to verify that the spaces between the register boot and the interior finishing wall are properly sealed. In addition, if the house rough-in duct leakage test was conducted without an air handler installed, inspect the connection points between the air handler and the supply and return plenums to verify that the connection points are properly sealed. All joints shall be inspected to ensure that no cloth backed rubber adhesive duct tape is used unless such tape is used in combination with mastic and drawbands.

4.3.8.2.2.3.2 Pressure pan test

With register dampers fully open, the house is pressurized to 25 pascals by a blower door, (If two registers are within 5 feet of each other and are connected to the same duct run, one register shall be sealed off before the pressure pan test is performed). the pressure difference across each register shall not exceed 1.5 Pa.

4.3.8.2.2.3.3 House Pressure Test

The pressure difference between the building conditioned space and a vented attic shall be measured to determine whether the house pressure is changed appreciably by the operation of the air handler. To perform this test, the pressure difference (P_{house}- P_{out}) between the building conditioned space and a vented attic (or outside if impossible to access the attic), shall be measured four times:

1. with the fan off (ΔP_{off1})
2. with the fan on (ΔP_{on})
3. with the fan on and the return grille 80% blocked (ΔP_{RB}). Block 80% on all return grilles if the house has two or more returns.
4. with the fan off (ΔP_{off2})

For each of these measurements, the five-second average pressure shall be measured 10 times and these 10 measurements shall be averaged.

For the house to pass this test, the following conditions must be true:

1. $\Delta P_{on} - (\Delta P_{off2} + \Delta P_{off1})/2$ must be between +0.8 Pa and -0.8 Pa and
2 $\Delta P_{RB} - \Delta P_{on}$ must be less than 0.8 Pa.

In addition, the absolute value of $(\Delta P_{off2} - \Delta P_{off1})$ must be less than 0.25 Pa, or else the test must be repeated. If the repeated test does not meet the above specified values, visual inspection or the pressure pan test or the fan pressurization test must be used. If these tests fail, the duct system needs to be properly sealed and re-verified by a fan pressurization test.

4.4 Delivery Effectiveness (DE) Calculations

Seasonal delivery effectiveness shall be calculated using the seasonal design temperatures from Tables 4.2.

4.4.1 Calculation of Duct Zone Temperatures

The temperatures of the duct zones outside the conditioned space are determined in Section 4.3.5 for seasonal conditions for both heating and cooling. If the ducts are not all in the same location, the duct ambient temperature for use in the delivery effectiveness and distribution system efficiency calculations shall be determined using an area weighted average of the duct zone temperatures:

$$T_{amb,s} = \frac{(A_{s,attic} + 0.001)T_{attic} + A_{s,crawl}T_{crawl} + A_{s,base}T_{base}}{A_{s,out} + 0.001} \quad (4.7)$$

$$T_{amb,r} = \frac{A_{r,attic}T_{attic} + A_{r,crawl}T_{crawl} + A_{r,base}T_{base}}{A_{r,out}} \quad (4.8)$$

The return ambient temperature, $T_{amb,r}$, shall be limited as follows:
For heating, the maximum $T_{amb,r}$ is $T_{in,heat}$. For cooling, the minimum $T_{amb,r}$ is $T_{in,cool}$.

4.4.2 Seasonal Delivery Effectiveness (DE)

The supply and return conduction fractions, B_s and B_r, shall be calculated as follows:

$$B_s = \exp\left(\frac{-A_{s,out}}{1.08 Q_e R_s}\right) \quad (4.9)$$

$$B_r = \exp\left(\frac{-A_{r,out}}{1.08 Q_e R_r}\right) \quad (4.10)$$

The temperature difference across the heat exchanger in the following equation is used:

for heating:

$$\Delta T_e = 55 \quad (4.11)$$

for cooling:

$$\Delta T_e = -20 \quad (4.12)$$

The temperature difference between the building conditioned space and the ambient temperature surrounding the supply, ΔT_s, and return, ΔT_r, shall be calculated using the indoor and the duct ambient temperatures.

$$\Delta T_s = T_{in} - T_{amb,s} \quad (4.13)$$

$$\Delta T_r = T_{in} - T_{amb,r} \quad (4.14)$$

The seasonal delivery effectiveness for heating systems shall be calculated using:

$$DE_{seasonal} = a_s B_s - a_s B_s (1 - B_r a_r) \frac{\Delta T_r}{\Delta T_e} - a_s (1 - B_s) \frac{\Delta T_s}{\Delta T_e} \qquad (4.15)$$

4.5 Seasonal Distribution System Efficiency

Seasonal distribution system efficiency shall be calculated using delivery effectiveness, equipment, load, and recovery factors calculated for seasonal conditions.

4.5.1 Equipment Efficiency Factor (F_{equip})

Equipment efficiency factor accounts for interactions between the duct system and the operation of the heating or cooling equipment. If the duct size and layout are designed and installed according to ACCA manual D and if the fan flow measurement meets the design specifications, the efficiency factor for cooling for F_{equip} is 1. Otherwise F_{equip} for cooling shall be 0.925. For heating, F_{equip} is 1.

4.5.2 Thermal Regain (F_{regain})

The reduction in building load due to regain of duct losses shall be calculated using the thermal regain factor. The default thermal regain factors are provided in Table 4.4.

Table 4.4 Thermal Regain Factors	
Supply Duct Location	**Thermal Regain Factor [F_{regain}]**
Attic	0.10
Crawlspace	0.12
Basement	0.30
Other	0.10

4.5.3 Recovery Factor (F_{recov})

The recovery factor, F_{recov}, is calculated based on the thermal regain factor, F_{regain}, and the duct losses without return leakage.

$$F_{recov} = 1 + F_{regain}\left(\frac{1 - a_s B_s + a_s B_s (1 - B_r)\frac{\Delta T_r}{\Delta T_e} + a_s (1 - B_s)\frac{\Delta T_s}{\Delta T_e}}{DE_{seasonal}}\right) \qquad (4.16)$$

4.5.4 Seasonal Distribution System Efficiency

The seasonal distribution system efficiency shall be calculated using the seasonal delivery effectiveness from section 4.4.2, the equipment efficiency factor from section 4.5.1, and the thermal recovery factor from Section 4.5.3. Note that $DE_{seasonal}$, F_{equip}, F_{recov} must be calculated separately for cooling and heating conditions. Distribution system efficiency shall be determined using the following equation:

$$h_{dist,seasonal} = DE_{seasonal} \times F_{equip} \times F_{load} \times F_{recov} \qquad (4.17)$$

where 0.98 accounts for the energy losses from heating and cooling the duct thermal mass.

Appendix K
Procedures For HVAC System Design and Installation

This appendix contains a detailed description of procedures that should be followed for designing and installing a quality HVAC system.

Procedures for HVAC Systems

The goal for a HVAC system is to provide proper air flow, heating, and cooling to each room. This page sets out key criteria that describe a quality system, and key design and installation considerations that should be met to achieve this goal. The pages following contain more detailed information on design, fabrication, installation, and performance testing.

1 CRITERIA FOR A QUALITY HVAC SYSTEM

An HVAC system should:

1. Be properly sized to provide correct air flow, and meet room-by-room calculated heating and cooling loads;
2. Be installed so that the static air pressure drop across the handler is within manufacturer and design specifications to have the capacity to meet the calculated loads;
3. Have sealed supply ductwork that will provide proper air flow;
4. Be installed with a return system sized to provide correct return air flow;
5. Have sealed return ductwork that will provide proper air flow to the fan, and avoid air entering the HVAC system from polluted zones (e.g., fumes from autos and stored chemicals, and attic particulates);
6. Have balanced air flows between supply and return systems to maintain neutral pressure in the home;
7. Minimize duct air temperature gain or loss between the air handler and room registers, and between return registers and the air handler;
8. Be properly charged with refrigerant;
9. Have proper burner operation and proper draft.

2 PROCEDURES TO DESIGN AND INSTALL AN AIR DISTRIBUTION SYSTEM

The following steps should be followed in the design and installation of the HVAC system to ensure efficiency and comfort (for details, see section on *Recommended Details for an HVAC System: Materials, Fabrication, Design, Installation, and Performance Testing*):

1. Determine room-by-room loads and air-flows using ACCA Manual J calculation procedures (or substantially equivalent);
2. Layout duct system on floor plan, accounting for the direction of joists, roof hips, fire-walls, and other potential obstructions. Determine register locations and types, duct lengths, and connections required to produce layout given construction constraints;
3. Size duct system according to ACCA Manual D calculation procedures (or substantially equivalent);
4. Size HVAC equipment to sensible load using ACCA Manual S procedures (or substantially equivalent);
5. Install equipment and ducts according to design specifications, using installation requirements and procedures from the Uniform Mechanical Code, the Air Diffusion Council, SMACNA, California Residential Energy Efficiency Standards, and manufacturers' specifications (Title 24); Using these procedures and those in Appendix A, the duct system should be substantially air tight;
6. Charge the system appropriately, and verify charge with the evaporator superheat method or subcooling method (or substantially equivalent);
7. Check for proper furnace burner operation and fire-box drafting;
8. Test the system to ensure that it performs properly by determining (1) that the system is properly sized, (2) it does not leak substantially, and has either (3a) proper air handler fan flow, and proper plenum static pressures, or (3b) proper room and return air flows, and proper plenum static pressures. (Procedures are detailed in Section 3.)

3 RECOMMENDED DETAILS FOR AN HVAC SYSTEM: MATERIALS, FABRICATION, DESIGN, INSTALLATION, AND PERFORMANCE TESTING

3.1 Minimum Materials Specifications

The following are minimum materials specifications recommended to achieve a substantially tight installation that will last:

All Materials

- Shall have a minimum performance temperature ratings per UL181 (ducts), UL181A (closure systems for rigid ducts), UL181B (closure systems for flexible ducts) and/or UL 181BM (mastic);
- Shall not be sealed with cloth back rubber adhesive duct tapes unless such tape is used in combination with mastic and drawbands;
- Shall have a flame spread rating of no more than 25 and a maximum smoke developed rating of 50 (ASTM E 84);

Factory-Fabricated Duct Systems

- All factory-fabricated duct systems shall include UL 181 listed ducts with approved closure systems including collars, connections and splices;
- All pressure-sensitive and heat-activated tapes used in the manufacture of rigid fiberglass ducts shall be UL 181A listed;
- All pressure-sensitive tapes and mastics used in the manufacture of flexible ducts shall be UL 181B (tape) or UL 181BM (mastic) listed.

Field-Fabricated Duct Systems

- Ducts:
  - Factory-made ducts for field-fabricated duct systems shall be UL 181 listed.
- Mastic sealants and mesh:
  - Sealants shall be UL 181BM listed, non-toxic, and water resistant;
  - Sealants for interior applications shall pass ASTM tests C 731 (extrudability after aging) and D 2202 (slump test on vertical surfaces);
  - Sealants and meshes shall be rated for exterior use;
  - Sealants for exterior applications shall pass ASTM tests C 731, C 732 (artificial weathering test), and D 2202.
- Pressure-sensitive tapes:
  - Pressure sensitive tape shall be that recommended by and meet the requirements of the flexduct manufacturer;
  - Tape used for duct board shall be UL 181A listed and so indicated with a UL 181A mark or aluminum-backed butyl adhesive tape (15 mil. minimum).
- Drawbands:
  - shall be either stainless-steel worm-drive hose clamps or uv-resistant nylon duct ties;
  - shall have a minimum performance temperature rating of 165 degrees Fahrenheit (continuous, per UL 181A-type test) and a minimum tensile strength rating of 150 pounds;
  - shall be tightened as recommended by the manufacturer with an adjustable tensioning tool.

3.2 DESIGN, FABRICATION, AND INSTALLATION

The following are design, fabrication, and installation guidelines, that, if carefully followed, will provide a duct installation that is substantially airtight:

3.2.1 General Issues

- Ducts, plenums, and fittings shall be constructed of galvanized metal, duct board, or flexible duct. Building cavities including platform returns may not be used as a duct or plenum without a flexible duct, duct board or metal duct.
- The air handler box should be air-tight;
- Air filters should be easily accessible for replacement, and evaporator coils should be easily accessible for cleaning;

- Ducts should be configured and supported so as to prevent use of excess material, prevent dislocation or damage, and prevent constriction of ducts below their rated diameter;
- Flexible duct bends should not be made across sharp corners or have incidental contact with metal fixtures, pipes, or conduits that can compress or damage the ductwork;
- Sheet metal collars and sleeves should be beaded to hold drawbands.

3.2.2 Design HVAC System

Loads and CFM Calculation

- ACCA Manual J Load Calculation or equivalent required;
- Calculate heat loss and heat gain for each room;
- Total room loads to determine system requirements.

Lay Out Air Distribution System

- Lay out duct system on floor plan and determine register positions and duct paths to optimize room air circulation and minimize duct length;
- Duct paths must account for locations and directions of joists, roof hips, fire walls, and other potential obstructions;
- Duct paths must be planned to avoid sharp turns of flexduct that will kink the duct.

Size Air Distribution System

- ACCA Manual D Duct Design or equivalent required;
- Calculate correct CFM for each room and total for building for both supply and return;
- Size ducts according to Manual J loads, Manual D air flows, and final layout on plans;
- Choose registers to optimize air distribution and duct static pressure;
- Size and locate returns to optimize air flow per Manual D;
- For return-filter grills, calculate minimum return filter area per Manual D.

Select System

- ACCA Manual S Residential Equipment Selection or equivalent required. ACCA, 1515 16th St., NW, Washington, DC 20036, (202)483-9370;
- From Manual J loads and Manual D CFM, determine appropriate equipment
- Equipment should be sized to sensible loads;
- Equipment sensible capacity should not be more than 15% larger than the total sensible design load (as specified in Manual S).

3.2.3 Fabricate And Install An Airtight Duct System

All Duct Types

- All air distribution shall be ducted. Cavities such as platforms supporting a furnace shall not be used as a plenum or duct. Cavities may have insulated and sealed ducts installed within the cavity. Caution should be used to assure that ducts installed in cavities are not compressed in a fashion that reduces the cross sectional area of the ducts or increases the restrictions to air flow.
- All joints and seams of duct systems and their components should be sealed with mastic, mastic and embedded mesh, or pressure-sensitive tape approved for use by the duct manufacturer and meeting UL181 specifications ("approved tape"); this includes around junctions of collars to distribution boxes and plenums;
- Joints and seams of duct systems and their components shall not be sealed with cloth back rubber adhesive duct tapes unless such tape is used in combination with mastic and drawbands
- All sealants should be used in strict accordance with manufacturer's installation instructions and within sealants moisture and temperature limitations;
- All tapes used as part of duct system installation should be applied to clean, dry surfaces and sealed with manufacturer's recommended amount of pressure or heat. If oil is present, taped surfaces should be prepared with a cleaner / degreaser prior to application;
- It is recommended that all register boxes should be sealed to the drywall or floor with caulking or mastic.

Flexible Ducts

- Flexible ducts should be joined by a metal sleeve, collar, coupling, or coupling system. At least 2 inches of the beaded sleeve, collar, or coupling must extend into the inner core while allowing a 1 inch attachment area on the sleeve, collar, or coupling for the application of tape;

- The inner core should be mechanically fastened to all fittings, preferably using drawbands installed directly over the inner core and beaded fitting. If beaded sleeves and collars are not used, then the inner core should be fastened to the fitting using #8 screws equally spaced around the diameter of the duct, and installed to capture the wire coil of the inner liner (3 screws for ducts up to 12" diameter, and 5 screws for ducts over 12" diameter);
- The inner core should be sealed to the fitting with mastic or approved tape;
- Tape used for sealing the inner core should be applied with at least 1 inch of tape on the duct lining, 1 inch of tape on the fitting of flange, and wrapped at least three times;
- The outer sleeve (vapor barrier) should be sealed at connections with a drawband and/or three wraps of approved tape;
- The vapor barrier should be complete. All holes, rips, and seams must be sealed with mastic or approved tape.

Metal Ducts and Plenums

- Metal-to-metal connections should be cleaned and sealed in accordance with manufacturer's specifications;
- Openings greater than 1/16 inch should be sealed with mastic and mesh, or butyl adhesive tape;
- Openings less than 1/16 inch should be sealed with mastic or UL-181A listed tape;
- Special attention should be paid to collar connections to duct-board and/or sheet metal; seal around the connection with mastic;
- Connections between collars and distribution boxes should be sealed with mastic or approved tape;
- At least three equally-spaced #8 screws should be used to mechanically fasten round ducts (3 screws for ducts up to 12" diameter, and 5 screws for ducts over 12" diameter);
- Crimp joints should have a contact lap of at least 1½ inches;
- Square or rectangular ducts should be mechanically fastened with at least one screw per side
- Ducts should be attached to plenums a sufficient distance from air handler and conditioning coil to avoid unbalanced air flow in ducts.

Duct Board

- Duct board connections should be sealed with adhesive, mastic, or UL 181A listed pressure-sensitive or heat-activated tape in accordance with manufacturer's specifications.

Duct Support

- Supports should be installed per manufacturer's specifications or per UMC requirements;
- Supports for flexible ducts should be spaced at no more than 4 foot intervals;
- Flexible ducts should be supported by strapping having a minimum width of 1½ inches at all contact points with the duct;
- Supports should not constrict the inner liner of the duct;
- Flexible ducts should have maximum of ½ inch sag per foot between supports;
- Flexible ducts may rest on ceiling joists or truss supports as long as they lie flat and are supported at no more that 4 foot intervals.

Boots

- After mechanically attaching the register boot to floor, wall, or ceiling, all openings between the boot and floor, wall, or ceiling should be sealed with caulk or mastic.

Seal Air Handler

- Openings greater than 1/16 inch should be sealed with mastic and mesh, or butyl adhesive tape;
- Openings less than 1/16 inch should be sealed with mastic or UL 181A listed tape;
- Unsealed access doors should be sealed with UL 181A listed tape.

3.2.4 Check Refrigerant Charge

- Verify an access door for inspecting a thermostatic expansion valve (TXV) and verify installation of a TXV when specified in design;
- For systems with fixed metering devices use evaporator superheat method:
  - indoor coil airflow must be greater than 350 CFM/ton;

- refrigerant system evacuation must be complete (all non-condensables must be removed from the system;
- in hot, dry climates be cautious to be within range of superheat charging chart or use a different method.

- For systems with thermostatic expansion valves use the subcooling method.

3.2.5 Check Combustion Performance

- Check each chamber for correct flame;
- Check for proper drafting.

3.2.6 Test System Performance

The following are testing requirements and procedures that must be followed to ensure that the HVAC system has been properly installed. The tests are designed to determine whether:

1. *Room-by-room air flows are correct;*
2. *Total supply is as designed;*
3. *Total return = total supply;*
4. *Ducts, plenum, and air handler are tight;*
5. *Static pressure is correct.*

- Test the system to ensure that it performs properly, by (1) verifying HVAC equipment sizes installed are those specified, (2) measuring duct leakage, and measuring either (3a) fan flow or (3b) supply and return flows and plenum static pressures:
  1. Air conditioner sensible capacity must be no more than 15% greater than the calculated sensible load; fan flow must be greater than 350 CFM/ton; check that the correct size air handler is installed.
  2. Ensure that the duct system does not leak substantially:
     a. A rough system, including both supply and return but without the air handler, should not leak more than 0.04*total fan flow per system measured in CFM @ 50 Pa;
     b. The finished installation, including supply, return, the air handler and finished registers, must not leak more than 0.06*total fan flow per system measured in CFM @ 50 Pa;
  3a. Measure air handler air flow and static pressure across fan; ensure that total air handler output is within 5% of design and manufacturer specifications at a static pressure within 0.1 in wg of design.
  3b. Supply and return air flow, and static pressure requirements: Ensure that supply and return flows are correct, and that the static pressure across the fan is correct:
     a. Measure room-by-room air flows to ensure that each register is within 15% of Manual D design air flow, and that the entire supply is within 5% of design;
     b. Measure return air flow to ensure that it is within 5% of the total supply air flow;
     c. Test static pressure drop across the blower to ensure that it is within 0.1 in water gauge of design and manufacturer specifications.
- Duct leakage can be determined using a pressurization or depressurization technique; for details, see Minneapolis Duct Blaster™ manual, or other commercially available duct pressurization or depressurization devices;
- Duct leakage to unconditioned space can be determined with the house pressurization or LBL simplified technique; for details see CEC report P400-91-031CN, Section Six;
- Fan flow, supply flow and return flow measurements, see Minneapolis Duct Blaster™ manual (or equivalent); alternatively for supply and return flows, use a calibrated flow hood. Do not use a pitot tube, or any type of anemometer to determine these air flows;
- Static pressure drop across the fan is measured using a small probe in the return plenum and in the supply plenum.

4 References

1997 Uniform Mechanical Code (UMC) Sections 601, 603, 604 and Appendix A, Standard 6-5 .
Air Diffusion Council, Flexible Duct Performance & Installation Standards.
ACCA Manual J, Seventh Edition, 1986
ACCA Manual D, New Edition, 1995

ACCA	1515 16th St., NW, Washington, DC 20036, (202)483-9370
ASTM E 84	Test for Surface Burning Characteristics of Building Materials
ASTM C 731	Extrudability After Aging
ASTM C 732	Artificial Weathering Test
ASTM D 2202	Slump Test on Vertical Surfaces
SMACNA Manual	Installation Standards for Residential Heating and Air Conditioning Systems
CEC Report	*Energy Characteristics, Code Compliance and Occupancy of California 1993 Title 24 Houses,* CEC report P400-91-031CN, May 1995, Section Six
UL Standard 181	Standard for Factory-Made Air Ducts and Air Connectors
UL Standard 181A	Standard for Closure Systems for Use With Rigid Air Ducts and Air Connectors
UL Standard 181B	Standard for Closure Systems for Use With Flexible Air Ducts
UL Standard 181BM	Standard for Mastic Materials

ACCA substantial equivalents:

ASHRAE	1791 Tullie Circle, N.E., Atlanta, GA 30329, (404)636-8400

Index

Index

A

ACCA Manual D, 4-1, 4-2, 4-3, 4-4, 4-8, 4-9, 4-13
Active Solar Space Heating, 5-25, 5-34, 5-35
Active Solar Water Heating, 6-26
Additions, 1-4, 1-7, 1-9, 3-1, 5-1, 5-4, 5-6, 5-34, 6-1, 6-8, 6-9, 6-11, 7-1 to 7-8, 7-11, 7-12, 7-18, 8-4, 8-8, G-3, G-21
  Addition Alone Method, 5-34
    Computer Method, 7-1, 7-6, 7-17
    Method, 7-1, 7-2, 7-3, 7-6, 7-8, 7-10, 7-11
    Water Heating Compliance, 7-1
  See Also Alterations
AFUE (Annual Fuel Utilization Efficiency) , 1-17, 2-27, 3-18, 3-23, 3-28 to 3-43, 5-25, 5-34, 6-16, 6-17, 6-35, 7-9, 7-14, 7-15, 8-13, 8-18, 8-20, 8-21, 8-29, G-1, G-3, G-4, G-24, G-25, G-48
Air Conditioning, 1-6, 1-24, 2-29, G-2, G-4, G-14, G-18, G-21, G-24, G-26, G-35, G-41
    See Also Heating, Ventilating and Air Conditioning
Air Films, G-32, G-51
    See Also R-Value (Thermal Resistance)
Air Porosity, G-1, G-5
Air Spaces, G-32, G-51
Air-to-Air Heat Exchanger, 3-1, 3-18, 3-23, 3-28 to 3-43, G-1, G-5
Alterations, 6-29, 7-1, 7-2, 7-3, 7-4, 7-18, 7-19, 7-20, 7-21, 7-22, 7-23, 7-24, 7-25, 8-4
  Fenestration Requirements, 7-1
  Mandatory Measures, 7-1, 7-6, 7-9, 7-13, 7-19, 7-22
    See Also Additions
Alternative Calculation Method, 1-11, 4-2, 4-8, 4-9, 5-1, 5-3, 5-36, 8-23, 8-24, 8-26, G-1, G-2, G-5, G-19
    See Also Computer Methods
Alternative Component Packages, 1-6, 1-11, 3-1, 3-4, 3-8, 8-13, G-1, G-5, G-10
    See Also Prescriptive Packages
American National Standards Institute (ANSI), 2-44, G-1, G-5, G-17, G-49
American Society of Testing and Materials (ASTM), 2-15, 2-23, 2-36, 2-37, 2-38, 2-39, 3-17, 4-6, 4-7, 8-24, 8-25, 8-26, G-2, G-6
Annual Fuel Utilization Efficiency
    See AFUE (Annual Fuel Utilization Efficiency)
Appliance Efficiency Standards, 6-10
Approved Computer Methods, 6-1, 7-1
Areal Heat Capacity, G-2, G-5, G-24
ASHRAE (American Society of Heating, Refrigerating and AC Engineers), 2-4, 2-8, 2-11, 2-29, 2-30, 3-15, 4-5, 5-12, 5-13, 5-15, 5-28, 6-19, G-2, G-5, G-6, G-31, G-32, G-35, G-43, G-44, G-45, G-46, G-51, G-54, G-55, G-56, G-57
ASHRAE Handbook of Fundamentals, 2-4, 2-8, 3-15, 5-12, 5-13, 5-15, G-2, G-6, G-31, G-32, G-43, G-44, G-46, G-51, G-54, G-55, G-56, G-57

B

Bathroom Lighting, 2-1, 2-49, 2-50
Benefits of Energy Conservation, 1-1, 1-2
Building Envelope, 2-1, 4-1, 4-5, 4-8, 5-6, 5-22
Building Envelopes, G-2, G-6
  Mandatory Measures, 2-1
Building Location Data, G-2, G-6
Building Types, G-2, G-6
Business and Professions Code, 1-14, 1-15, 1-17

C

California Code of Regulations, 1-1, 1-14, 1-18, 2-1, 3-1, 5-1, 6-1, 7-1, 8-1, G-1, G-5, G-19, G-41, G-43
California Energy Commission, 5-2, G-7
  California Climate Zone Descriptions, G-7
  California Code of Regulations, 1-1, 1-14, 1-18, 2-1, 3-1, 5-1, 6-1, 7-1, 8-1, G-1, G-5, G-19, G-41, G-43
  Consumer Guide and Directory of Certified, 8-25
  Directory of Certified Water Heaters, 6-36
  Energy Hotline, 5-3, 5-5
  Consumer Guide and Directory of Certified, 1-24, 2-4
    Energy Hotline, 1-22, 1-23, 1-24, 1-25, 5-3, 5-5, G-25
    Low-Rise Residential Standards, G-16, G-24, G-26
  Nonresidential Manual for Compliance with the Energy Efficiency Standards, 1-7, 8-2
  Nonresidential Standards, 1-7, 1-8, 1-9, 1-22, 1-23
  Publications, 1-1, 1-24, 5-3
  Residential Manual for Compliance with the Energy Efficiency Standards, 1-7
  Water Heating Calculation Method, 6-1, 6-37
Caulking, 2-21
Ceiling Insulation, 2-1, 2-4, 2-5, 2-7, 3-3
Certificate of Compliance, 1-1, 1-11, 1-12, 1-13, 1-14, 1-15, 1-16, 1-18, 1-19, 1-20, 1-21, 2-28, 2-35, 2-38, 3-6, 3-7, 3-24, 3-25, 3-26, 4-7, 4-8, 5-35, 6-5, 7-6, 7-9, 7-11, 7-13, 7-17, 7-18, 7-19, 7-22, 7-23, 7-24, 8-4, 8-11, G-6, G-8, G-21, G-28, G-30, G-39
Change in Occupancy, 8-5
Climate Zones, 1-1, 1-9, 1-10, 2-22, 2-23, 3-1, 3-2, 3-17, 3-18, 3-20, 5-14, 6-5, 8-22, G-9, G-28, G-46

Combined Hydronic Space and Water Heating, 6-11, 6-12, 6-17, 6-41, G-25
Compliance, 1-1, 1-3, 1-4, 1-5, 1-8, 1-9, 1-11, 1-12, 1-13, 1-14, 1-15, 1-16, 1-18, 1-21, 2-1, 2-2, 2-3, 2-4, 2-8, 2-12, 2-13, 2-14, 2-18, 2-21, 2-23, 2-27, 2-29, 2-30, 2-32, 2-33, 2-35, 2-36, 2-37, 2-39, 2-40, 2-45, 2-51, 3-1 to 3-9, 3-11, 3-17, 3-18, 3-20, 3-24, 4-2, 4-3, 4-4, 4-6, 4-7, 5-1, 5-3, 5-4, 5-22, 5-23, 6-3, 6-5, 6-7, 6-9, 6-10, 6-11, 6-12, 6-14, 6-35, 6-38, 7-1, 7-2, 7-3, 7-4, 7-6 to 7-11, 7-13, 7-16, 7-18 to 7-24, 8-1 to 8-6, 8-10 to 8-13, 8-16, 8-18, 8-20 to 8-23, 8-26, 8-28, 8-30, G-2, G-7, G-8, G-10, G-14, G-31, G-36, G-48
- Additions, 1-4, 1-7, 1-9, 3-1, 5-1, 5-4, 5-6, 5-34, 6-1, 6-8, 6-9, 6-11, 7-1, 7-2, 7-4, 7-5, 7-6, 7-7, 7-8, 7-11, 7-12, 7-18, 8-4, 8-8, G-3, G-21
- Approach, 5-37, 6-1, 7-6, 7-11, 7-19, 8-13
- Computer Method, 1-4, 5-1, 5-2
- Mandatory Measures, 1-1, 1-4, 1-9, 1-11, 1-12, 1-16, 1-18, 1-19, 1-21, 2-1, 2-2, 2-28, 2-51, 3-24, 5-36, 7-1, 7-6, 7-9, 7-13, 7-19, 7-22, G-8
- Prescriptive Packages, 1-11, 3-1, 3-2, 6-1, 6-5, 6-7

Compliance Documentation, G-2, G-7, G-31
- Certificate of Compliance, 1-1, 1-11, 1-12, 1-13, 1-14, 1-15, 1-16, 1-18, 1-19, 1-20, 1-21, 2-28, 2-35, 2-38, 3-6, 3-7, 3-24, 3-25, 3-26, 4-7, 4-8, 5-35, 6-5, 7-6, 7-9, 7-11, 7-13, 7-17, 7-18, 7-19, 7-22, 7-23, 7-24, 8-4, 8-11, G-6, G-8, G-21, G-28, G-30, G-39
- Combined Hydronic Space and Water Heating, 6-11, 6-12, 6-17, 6-41, G-25
- Installation Certificate, 1-12, 1-16, 1-17, 1-18, 1-19, 1-20, 1-21, 2-2, 2-28, 2-29, 2-30, 2-51, 3-7, 3-19, 3-22, 4-7, 5-36, 6-9, 7-11, 7-17, 7-18, 7-24, 8-12, G-11
- Insulation Certificate, 1-11, 1-12, 1-13, 1-15, 1-16, 1-17, 1-18, 1-19, 1-21, 2-4, 2-6, 2-10, 2-11, 2-15, 2-51, 3-6, 5-36, 7-11, 7-17, 7-18, 7-24, G-11
- Mandatory Measures Checklist, 1-11, 1-12, 1-16, 1-19, 1-21, 2-2, 2-51, 3-11, 5-36 , 7-6, 7-9, 7-13, 7-19, 7-22, G-8
- Proposed Construction Assembly, G-10
- Thermal Mass Worksheet, G-10
- Water Heating for Multi-Family, 6-11, 6-14
- Water Heating Worksheet, 6-11, 6-12

Computer Method Summary, 1-12, 4-8, 5-4, 5-6, 5-35
Computer Methods, 4-8, 5-1, 5-2, 5-4, 5-6, 5-35, 7-6, 7-17, G-8
- Active Solar Space Heating, 5-25, 5-34, 5-35
- Alternative Calculation Method, 1-11, 4-2, 4-8, 4-9, 5-1, 5-3, 5-36, 8-23, G-1, G-2, G-5
- Approval, 4-2, 4-8, 4-9, 5-1, 5-2, 5-3, 5-36
- Building Type, 5-7, G-2, G-3, G-6, G-29, G-40
- Controlled Ventilation Crawl Space, 2-12, 3-6, 5-6, 5-9, 5-26, 5-28, 5-29, 8-1, 8-14, G-2, G-14, G-15
- Documentation, 4-1, 4-11, 5-1
- Duct Leakage, 4-1, 4-4, 4-7, 5-22
- Energy Budget, 1-1, 1-11, 1-12, 5-1, 5-3, 5-4, 5-5, G-2, G-15, G-18, G-30, G-41

Computer Methoids(cont.)
- Fins, 5-20
- General Compliance Procedure, 5-1
- Hydronic Space Heating, 5-25, 5-34, 6-41, 8-1, G-2, G-26
- Internal Gain, 5-1, 5-6, 5-24
- Orientation, 5-7, 5-8, 5-11, 5-17
- Overhangs, 5-6, 5-19
- Proposed Design Energy, 5-4, 5-5, 8-29
- Proposed Design Modeling Procedure, 5-7 to 5-11, 5-14, 5-16 to 5-27, 5-29 to 5-35
- Shading, 5-1, 5-6, 5-18, 5-19, 5-27
- Solar Gains, 5-11
- Space Conditioning System, 5-6, 5-25, G-3, G-41
- Standard Design Energy Budget, 5-4, 5-5
- Thermal Mass, 5-1, 5-6, 5-20, 5-27
- Thermostat Setpoints, 5-6, 5-24, 5-27
- Total Conditioned Floor Area, 5-8, G-12
- Unconditioned Space, 5-1, 5-9, 5-16, 5-24, 5-26
- U-Values, 5-12, 5-13, 5-15
- Ventilation, 5-1, 5-6, 5-9, 5-22, 5-23, 5-26, 5-27, 5-28, 5-29
- Volume, 5-8, 5-29
- Walls, Doors, Roofs/Ceilings & Floors, 5-9
- Water Heating, 5-1, 5-3, 5-4, 5-6, 5-26, 5-33, 5-36
- Zonal Control, 5-1, 5-6, 5-24, 5-30, 5-32, 8-1, 8-16, 8-17, G-3, G-26, G-47

Conditioned Floor Area, 6-12, G-2, G-3, G-11, G-21, G-23, G-41
Conditioned Footprint Area, G-2, G-13, G-21, G-30, G-40
Conditioned Slab Floor Area, 5-8, 5-14
Conditioned Space, 4-1, 4-3, 5-27, G-2, G-3, G-13, G-15
Conductivity, 5-21
Construction Assembly, 1-11, 1-12, 5-36
Continuous Infiltration Barrier, 2-23, 3-1, 3-17, G-28
Controlled Ventilation Crawl Space, 2-12, 3-6, 5-6, 5-9, 5-26, 5-28, 5-29, 8-1, 8-14, G-2, G-14, G-15
Cooling Load, G-2, G-8, G-14
Cooling Load Temperature Difference, G-2, G-14
Crawl Space, 5-1, 5-28, 5-29, 8-1, G-2, G-14, G-15, G-35, G-44, G-56

D

Dampers, 8-17
Department of Consumer Affairs Thermal Insulation Program, 2-4
Design Conditions, 2-29, G-2, G-15
Design Heat Loss, G-2, G-15
Directory of Certified Water Heaters, 6-36
Dominant Occupancy, G-2, G-16, G-41
Doors, 2-1, 2-15, 2-16, 2-17, 2-18, 2-19, 2-24, 2-26, 8-8, G-22, G-50

Ducts, 1-5, 2-1, 2-14, 2-36, 2-37, 2-38, 2-39, 2-40, 2-41, 2-42, 2-43, 3-19, 3-44, 4-1, 4-2, 4-3, 7-15
Efficiency, 4-1, 4-8, 5-1, 5-26, 5-34, 8-23
Duct Surface Area, 4-1, 4-4
Reduced Duct Leakage, 4-1, 4-7, 5-22
R-Value, 4-1, 4-3

E

East-Facing, G-2, G-6, G-16, G-21, G-30, G-41
EER (Energy Efficiency Ratio), 5-25, 8-23, G-2, G-4, G-5, G-14, G-16, G-17, G-18, G-23, G-24, G-25, G-35, G-49
Efficacy, 2-48, G-2, G-3, G-18, G-29
Electric Resistance Heating, 2-45, 3-19, G-2, G-18, G-25, G-41
Enclosed Space, G-2, G-18
Energy Budget, 1-1, 1-11, 1-12, 5-1, 5-3, 5-4, G-2, G-15, G-18, G-30, G-41
Energy Efficiency Standards, 1-1, 1-3, 1-8, 1-9, 1-13, 1-20, 2-1, 2-11, 2-14, 3-1, 4-1, 5-1, 6-1, 7-1, 7-4, 8-1, 8-4, G-1, G-2, G-6, G-19, G-41, G-43
Energy Hotline, 5-3, 5-5, G-25
Energy Obtained from Depletable Sources, G-2
Energy Obtained from Nondepletable Sources, G-2
Energy Use Summary, 5-4
Enforcement
Certificate of Compliance, 1-1, 1-11, 1-12, 1-13, 1-14, 1-15, 1-16, 1-18, 1-19, 1-20, 1-21, 2-28, 2-35, 2-38, 3-6, 3-7, 3-24, 3-25, 3-26, 4-7, 4-8, 5-35, 6-5, 7-6, 7-9, 7-11, 7-13, 7-17, 7-18, 7-19, 7-22, 7-23, 7-24, 8-4, 8-11, G-6, G-8, G-21, G-28, G-30, G-39
Field Inspection
Caulking, 2-21
Ducts, 2-1, 2-14, 2-36, 2-37, 2-38, 2-39, 2-40, 2-41, 2-42, 2-43
Fenestration (Windows, Skylights, Glazed Doors), 2-15, 2-18, 2-19, 8-1, 8-7, 8-8, 8-10, 8-11, G-2, G-20, G-21, G-23, G-29, G-40, G-45
Fenestration Rating, 2-15, 2-18, 2-20, 8-10, 8-11, G-3, G-29
Fireplaces, 2-1, 2-24, 2-25, 2-47
Installation Certificate, 1-12, 1-16, 1-17, 1-18, 1-19, 1-20, 1-21, 2-2, 2-28, 2-29, 2-30, 2-51, 3-7, 3-19, 3-22, 4-7, 5-36, 6-9, 7-11, 7-17, 7-18, 7-24, 8-12, G-11
Insulation Certificate, 1-11, 1-12, 1-13, 1-15, 1-16, 1-17, 1-18, 1-19, 1-21, 2-4, 2-6, 2-10, 2-11, 2-15, 2-51, 3-6, 5-36, 7-11, 7-17, 7-18, 7-24, G-11
Setback Thermostats, 2-1, 2-30, 2-31, 3-18, 8-17
Plan Check, 1-3, 1-13, 1-14, 1-16, 1-21, 2-3, 2-4, 2-8, 2-12, 2-13, 2-14, 2-18, 2-21, 2-23, 2-27, 2-29, 2-30, 2-32, 2-33, 2-35, 2-37, 2-45, 2-51, 3-1 to 3-9, 3-11, 3-17, 3-18, 3-20, 3-24, 5-3, 5-4, 6-3, 6-9, 6-10, 6-12, 6-35, 7-6, 7-8, 7-10, 7-13
Enforcement (cont.)
Plan Check (cont.), 7-16, 7-18, 7-19, 7-20, 7-21, 7-22, 7-24, 8-2, 8-4, 8-5, 8-6, 8-10, 8-11, 8-13, 8-16, 8-18, 8-22, 8-23, 8-26, 8-28, 8-30
Signature Requirements
Special Features, 4-3, 4-6, 4-7, 5-23, 5-32, 5-35, 7-10, 8-7, 8-26
Evaporative Cooler, 8-22, G-2, G-19
Exceptional Method, G-2, G-19
Exfiltration, G-2, G-20, G-46
Existing-Plus-Addition, 5-7, 7-1, 7-2, 7-11, 7-13, 7-16, 7-17
Exterior Partition, G-2, G-20
Exterior Roof/Ceiling, G-2, G-20, G-30
Exterior Wall, 5-9, 5-27, G-2, G-20
Exterior Wall Area, G-2, G-20

F

f-Chart, 5-33, 5-35, 6-16, 6-27, 8-28, 8-29
Fenestration, 1-5, 2-1, 2-15, 2-18, 2-19, 2-20, 3-1, 3-7, 3-8, 5-1, 5-6, 5-16, 5-18, 5-19, 5-20, 5-27, 5-31, 7-1, 7-7, 7-16, 7-19, 8-1, 8-7, 8-8, 8-9, 8-10, 8-11, G-2, G-3, G-20, G-21, G-23, G-29, G-39, G-40, G-45
Area, 3-8, G-2, G-20, G-23, G-29
Fenestration Product, 2-15, 2-18, 2-19, 8-1, 8-7, 8-8, 8-10, 8-11, G-2, G-20, G-21, G-23, G-29, G-40, G-45
Fenestration Worksheet, 1-11, 2-20, 3-9, 3-10, 3-24, 5-36, G-10, G-36, G-37, G-38, G-39, G-48, G-53
Glazing, 2-17, 3-1, 3-7, 3-8, 3-10, 3-23, 3-28 to 3-43, 8-1, G-2, G-20, G-23, G-37, G-38, G-40, G-52
Installation, 2-15
Product Specification, 8-10
Solar Heat Gain Coefficient, 1-5, 1-11, 2-17, 2-18, 2-20, 3-24, 5-18, 5-20, 5-36, 8-11, G-3, G-10, G-21, G-35, G-36, G-37, G-38, G-39, G-40, G-47, G-52, G-53
U-Value, 3-7
U-Value Rating, 2-18
Fenestration Area, 3-8, G-2, G-20, G-23, G-29
Fenestration Product, 2-15, 2-18, 2-19, 8-1, 8-7, 8-8, 8-10, 8-11, G-2, G-20, G-21, G-23, G-29, G-40, G-45
Fireplace, 2-24, 2-25, 2-46, G-2, G-21
Floor Area, 3-8, 3-11, G-2, G-21
Fluorescent Lighting
Ballasts, 7-24
Fossil Fuels, G-2, G-21
Framing Effects, G-2, G-21
Framing Percentages, G-32, G-51
Front, 5-7, 5-8, 5-9, 5-11, 5-16, 5-17, 8-4, 8-7, G-2, G-6, G-21, G-28, G-30

G

Gas Furnace, 7-15, G-25
  Floor Furnace, G-4, G-48
  Mandatory Measures, G-25
  Wall Furnace, G-4, G-48
Gas Logs, 2-1, 2-24, 2-25
General Lighting, G-2, G-23, G-29, G-42
Ground Floor Area, 3-10, 3-11, 5-10, G-2, G-13, G-23

H

Habitable Story, G-2, G-23
Heat Pump, 2-1, 2-31, 2-32, 3-22, 3-23, 3-28 to 3-43, 5-6, 6-3, 6-18, 7-15, 8-1, 8-23, G-2, G-14, G-16, G-17, G-19, G-23, G-24, G-25, G-26, G-35, G-49
Heat Pump Controls, 2-1, 2-31, 2-32
Heating, Ventilating and Air Conditioning (HVAC) , 1-3, 1-4, 1-6, 1-9, 1-13, 2-1, 2-18, 2-21, 2-26, 2-27, 2-29, 2-31, 3-19, 3-44, 4-1, 4-2, 4-3, 4-4, 4-5, 4-7, 4-13, 5-3, 5-22, 5-30, 5-32, 5-36, 6-19, 7-9, 7-14, 7-16, 7-18, 7-20
Heating, Ventilating and Air Conditioning (HVAC) (cont.), 7-21, 8-17, 8-22, 8-23, 8-24, G-2, G-6, G-11, G-24, G-26, G-47
  AFUE (Annual Fuel Utilization Efficiency), G-1, G-3
  Dampers, 8-17
  Ducts, 1-5, 2-1, 2-14, 2-36, 2-37, 2-38, 2-39, 2-40, 2-41, 2-42, 2-43, 3-19, 3-44, 4-1, 4-2, 4-3, 7-15
  Heat Pump, 2-1, 2-31, 2-32, 3-22, 3-23, 3-28 to 3-43, 5-6, 6-3, 6-18, 7-15, 8-1, 8-23, G-2, G-14, G-16, G-17, G-19, G-23, G-24, G-25, G-26, G-35, G-49
  Hydronic Space Heating, 5-25, 5-34, 6-41, 8-1, G-2, G-26
  Mandatory Measures, 2-1, 2-14, 2-18, 2-21, 2-26, 2-27, 2-29, 2-31, 2-36, 2-37, 2-38, 2-39, 2-40, 2-41, 2-42, 2-43
  Pilot Light, 2-1, 2-45, 2-46
  Prescriptive Packages, 1-11, 3-1, 3-2, 6-1, 6-5, 6-7
  SEER (Seasonal Energy Efficiency Ratio), 1-17, 1-18, 2-27, 3-19, 3-23, 3-28 to 3-43, 5-25, 7-9, 7-14, 7-15, 8-22, 8-23), G-3, G-4, G-5, G-14, G-16, G-18, G-24, G-25, G-35, G-47
  Setback Thermostat, 2-1, 2-30, 2-31, 3-18, 3-19, 8-17
  Sizing, 2-1, 2-29, 2-30, 2-44
  Zonal Control, 5-1, 5-6, 5-24, 5-30, 5-32, 8-1, 8-16, 8-17, G-3, G-26, G-47
HERS (Home Energy Rating System), 1-4, 1-15, 1-18, 4-1 to 4-4, 4-6 to 4-13, 5-22, 5-23, 5-35, 7-9, 7-14, 8-26, G-11
  HERS Provider, 1-15, 4-2, 4-8, 4-9, 4-10 to 4-13, 5-35
  HERS Rater, 1-15, 4-2, 4-3, 4-4, 4-6 to 4-13, 5-22, 5-23, 5-35, 7-9, 7-14, G-11
History of the Standards, 1-1, 1-6, 1-8
Hot Water Recovery System, 6-39, 7-12
HSPF (Heating Seasonal Performance Factor), 1-17, 2-27, 3-19, 3-28 to 3-43, 3-44, 5-256-18, 6-35, 7-15, 8-18, 8-20, 8-21, 8-23 G-2, G-14, G-16, G-18, G-24, G-25, G-26
Hydronic Space Heating, 5-25, 5-34, 6-41, 8-1, G-2, G-26

I

Indirectly Conditioned Space, G-2, G-11, G-26
Infiltration, 2-23, 5-1, 5-6, 5-22, 5-27, 8-1, 8-26, G-2, G-26, G-28, G-46
  Air-to-Air Heat Exchanger, 3-1, 3-18, 3-23, 3-28 to 3-43, G-1, G-5
  Infiltration Barrier, 2-23
  Infiltration Controls, G-2, G-28, G-46
  Tight, G-28
Installation Certificate, 1-12, 1-16, 1-17, 1-18, 1-19, 1-20, 1-21, 2-2, 2-28, 2-29, 2-30, 2-51, 3-7, 3-19, 3-22, 5-36, 6-9, 7-11, 7-17, 7-18, 7-24, 8-12, G-11
Insulation, 1-1, 1-11, 1-12, 1-13, 1-15 to 1-19, 1-21, 1-24, 2-1 to 2-12, 2-14, 2-15, 2-26, 2-32, 2-35, 2-51, 3-1, 3-2, 3-3, 3-4, 3-5, 3-6, 3-23, 3-28 to 3-43, 5-12, 5-13, 5-15, 5-28, 5-36, 6-20, 6-25, 6-37, 7-7, 7-11, 7-16, 7-17, 7-18, 7-24, 8-24, 8-25, G-2, G-11, G-14, G-28, G-35, G-45, G-51
  Ceiling Insulation, 2-1, 2-4, 2-5, 2-7, 3-3
  Insulation Certificate, 1-11 to 1-19, 1-21, 2-4, 2-6, 2-10, 2-11, 2-15, 2-51, 3-6, 5-36, 7-11, 7-17, 7-18, 7-24, G-11
  Loose Fill Insulation, 2-1, 2-7
  Mass Wall Insulation, 3-4, 3-5
  Raised Floor Insulation, 1-6, 2-1, 2-11, 2-12, 3-5, 3-6
  R-Value, 2-3, 2-4, 2-8, 2-12, 3-3, 5-5, 5-10, 5-14, 5-15, 5-28, 6-16, 6-25, 8-30, G-3, G-14, G-21, G-28, G-30, G-32, G-35, G-45, G-47, G-51
  Slab Edge Insulation, 2-1, 2-12, 2-13, 5-14, 8-20
  Wall Insulation, 2-1, 2-7, 2-8, 2-9, 2-10, 2-11, 3-3, 3-6, 5-12, 5-13
  Water Heater Insulation, 2-32
Indoor Air Quality, 4-1, 4-5
Infiltration, 4-1, 4-5
  Tight, 4-1, 4-6
Installation Certificate, 4-7
Interior Mass UIMC Values, 3-10, 3-11, 3-12, 3-13, 3-16, G-3, G-46
Interior Partition, G-2, G-28
Internal Gain, 5-1, 5-6, 5-24
Interpolation, 3-20

K

Kitchen Lighting, 2-1, 2-47, 2-48, 2-49

L

Left, G-2, G-28
Lighting, 2-1, 2-26, 2-50, 2-51, G-2, G-23, G-29, G-42
  High Efficacy, 1-5, 1-6, 2-49
Log Homes, 1-4, 8-2
Loose Fill Insulation, 2-1, 2-7
Low-Rise Residential, G-3, G-16, G-23, G-24, G-26, G-29
Low-Rise Residential Standards, G-16, G-24, G-26
Lumens/Watt, 2-48, G-3, G-18, G-29
Luminaire, G-3

M

Mandatory Measures, 1-1, 1-4, 1-9, 1-11, 1-12, 1-16, 1-18, 1-19, 1-21, 2-1, 2-2, 2-28, 2-51, 3-24, 5-36, 7-1, 7-6, 7-9, 7-13, 7-19, 7-22, G-8
  Building Envelope Measures
    Ceiling Insulation, 2-1, 2-4, 2-5, 2-7
    Loose Fill Insulation, 2-1, 2-7
    Raised Floor Insulation, 2-1, 2-11, 2-12
    Slab Edge Insulation, 2-1, 2-12, 2-13
    Special Infiltration Barrier, G-28
  Lighting Measures
    Bathroom Lighting, 2-1, 2-49, 2-50
    Kitchen Lighting, 2-1, 2-47, 2-48, 2-49
Mandatory Measures (cont.)
  Mandatory Measures Checklist, 1-11, 1-12, 1-16, 1-19, 1-21, 2-2, 2-51, 3-24, 5-36, G-8
  Space Conditioning, Water Heating and Plumbing System
    Heat Pump Controls, 2-1, 2-31, 2-32
    Pilot Lights, 2-1, 2-46
    Pipe Insulation, 2-1, 2-33, 2-34, 2-35, 6-5, 6-6, 6-9, 6-38, 6-40, 6-41, 7-12
    Pipe InsulationSpecial Infiltration Barrier, 2-1, 2-22, 2-23
    Pool and Spa Heating Systems and Equipments, 2-44
    Setback Thermostats, 2-1, 2-30, 2-31, 3-18, 8-17
    Space Conditioning Equipment Sizing, G-8
    Vapor Barriers, 2-22
    Wall Insulation, 2-1, 2-7, 2-8, 2-9, 2-10, 2-11
Manual J, 2-29
Manufactured Device, G-3, G-29
Mass Coupling, 5-21
Mass Wall Insulation, 3-4, 3-5
Mixed Occupancy Buildings, 1-22, 8-1
  Subordinate Occupancy, G-3, G-41
Modeling, 1-18, 2-14, 4-3, 4-6, 4-7, 5-1, 5-2, 5-6, 5-23, 5-32, 5-35, 8-21, 8-26
Multi-Family Building, 6-11, 8-1, 8-2, 8-3
  Compliance Unit-By-Unit, 8-3
Multiple Orientations, 1-23, 8-5, 8-7

N

Natural Ventilation, 5-6, 5-23
Nonresidential Manual for Compliance with Energy Efficiency Standards, G-6
Nonresidential Standards, 1-7, 1-8, 1-9, 1-22, 1-23
North-Facing, G-3, G-21, G-29, G-30

O

Occupancy Types
  Change in Occupancy, 8-1, 8-4, 8-5
  Mixed Occupancy Buildings, 1-22
Orientation, 5-7, 5-8, 5-11, 5-17, 8-6, 8-7, G-21
Outside Air, G-3, G-30
Overhang, G-39

P

Package D, 1-6, 1-12, 1-16, 3-1, 3-2, 3-6, 3-11, 3-18, 3-19, 3-22, 3-44, 5-3, 5-36, 5-37, 7-2, 7-3, 7-6, 7-7, 7-8, 7-9, 7-13, G-41
Package E, 1-5, 3-2
Parallel Path Method, G-32
Performance Approach, 7-1, 7-8, 7-11, 7-13, 8-13
Pilot Light, 2-1, 2-45, 2-46
Pipe Insulation, 2-1, 2-33, 2-34, 2-35, 6-5, 6-6, 6-9, 6-38, 6-40, 6-41, 7-12
Plan Check, 1-3, 1-13, 1-14, 1-16, 1-21, 2-3, 2-4, 2-8, 2-12, 2-13, 2-14, 2-18, 2-21, 2-23, 2-27, 2-29, 2-30, 2-32, 2-33, 2-35, 2-37, 2-45, 2-51, 3-1, 3-2, 3-3, 3-4, 3-5, 3-7, 3-8, 3-9, 3-11, 3-17, 3-18, 3-20, 3-24, 5-3, 5-4, 6-3, 6-9, 6-10, 6-12, 6-35, 7-6, 7-8, 7-10, 7-13, 7-16, 7-18 to 7- 4, 8-2, 8-4, 8-5, 8-6, 8-10, 8-11, 8-13, 8-16, 8-18, 8-22, 8-23, 8-26, 8-28, 8-3
Plans and Specifications, G-7
Pool and Spa Heating Systems and Equipment, 2-44
Prescriptive Packages, 1-11, 3-1, 3-2, 6-1, 6-5, 6-7
  Air-to-Air Heat Exchanger, 3-1, 3-18, 3-23, 3-28 to 3-43, G-1, G-5
  Continuous Infiltration Barrier, 2-23, 3-1, 3-17, G-28
  Fenestration, 3-1, 3-7, 3-8
  Insulation, 3-1, 3-2, 3-3, 3-4, 3-5, 3-6, 3-23, 3-28 to 3-43
  Package D, 1-6, 1-12, 1-16, 3-1, 3-2, 3-6, 3-11, 3-18, 3-19, 3-22, 3-44, 5-3, 5-36, 5-37, 7-2, 7-3, 7-6, 7-7, 7-8, 7-9, 7-13, G-41
Proposed Design, 4-3, 5-1, 5-4, 5-5, 5-7, 5-8, 5-9, 5-10, 5-11, 5-14, 5-16 to 5-27, 5-29 to 5-36, 8-29, G-3, G-18, G-30, G-41
Publications, 1-1, 1-24, 5-3
  ASHRAE Handbook of Fundamentals, 2-4, 2-8, 3-15, 5-12, 5-13, 5-15, G-2, G-6, G-31, G-32, G-43, G-44, G-46, G-51, G-54, G-55, G-56, G-57
  Climatic Data for Region X – Arizona, California, Hawaii, Nevada, G-6

R

Raised Floor, 1-6, 2-1, 2-11, 2-12, 3-5, 3-6, 3-11, 3-23, 3-28 to 3-43, 5-9, 5-13, 7-15, G-3, G-13, G-30, G-44, G-56
Raised Floor Insulation, 1-6, 2-1, 2-11, 2-12, 3-5, 3-6
Readily Accessible, G-3, G-30
Recovery Efficiency, 3-22, 6-13, 6-16, 6-17, 6-18, 6-25, 7-12, G-3, G-30
Repairs, 7-1, 7-2, 7-4, 7-5, 7-24, 7-25, G-30
Right, 2-40, G-3, G-30
Roof, 7-15, G-2, G-3, G-30, G-32, G-33, G-43, G-45, G-51, G-54, G-56

S

SEER (Seasonal Energy Efficiency Ratio), 1-17, 1-18, 2-27, 3-19, 3-23, 3-28 to 3-43, 5-25, 7-9, 7-14, 7-15, 8-22, 8-23, G-3, G-4, G-5, G-14, G-16, G-18, G-24, G-25, G-35, G-47
Service Water Heating, G-3, G-35
Setback Thermostat, 2-1, 2-30, 2-31, 3-18, 3-19, 8-17
Shading, 1-5, 2-17, 3-1, 3-2, 3-8, 3-9, 3-10, 5-1, 5-6, 5-18, 5-19, 5-27, 7-7, 7-15, 8-11, G-3, G-20, G-21, G-23, G-35, G-36, G-37, G-39, G-40, G-52, G-53
  Exterior Shade, 5-19, G-38
  Interior Shade, 5-18
  Shade Closed, G-36
  Shade Open, G-36
  Side Fins, G-3, G-40
  Solar Heat Gain Coefficient, 1-5, 1-11, 2-17, 2-18, 2-20, 3-24, 8-11, G-3, G-10, G-21, G-35, G-36, G-37, G-38, G-39, G-40, G-47, G-52, G-53
Side Fins, G-3, G-40
Single Family Attached, G-3, G-40
Single Family Building, G-3, G-40
Sizing Calculations, 2-29
Skylight, 2-16, 5-10, G-3, G-22, G-40, G-50
Slab Edge Insulation, 2-1, 2-12, 2-13, 5-14, 8-20
Slab-on-Grade, 3-12, G-3, G-13, G-40
SMACNA, 2-29, 2-44, G-3
Solar Energy Systems, 8-1, 8-2
Solar Fraction, 6-16
Solar Heat Gain Coefficient (SHGC) Worksheet, Form S, 1-11, 2-20, 3-9, 3-10, 3-24, 5-38, G-3, G-13, G-40
Solar Rating and Certification Corporation (SRCC), 2-35, 6-17, 6-37
Solar Space Heating, 8-29
Solar Water Heating, 2-1, 2-35, 5-6
Source Energy, 6-1, G-3, G-18, G-40, G-41, G-53
Source Energy Conversion Rates, G-41, G-53
South-Facing, 3-8, G-3, G-6, G-41
Space Conditioning, 1-6, 2-1, 2-29, 2-30, 3-1, 3-18, 3-19, , 5-1, 5-6, 5-25, 7-14, 8-28, G-3, G-8, G-41, G-47
Standard Design, 4-3, 5-1, 5-4, 5-5, 5-8, 5-20, 5-22, 5-36, 5-37, G-3, G-18, G-30, G-41
Standards, 1-1, 1-4, 1-5, 1-6, 1-7, 1-8, 1-9, 1-12, 1-13, 1-22, 1-23, 1-24, 2-3, 2-4, 2-29, 2-40, 3-1, 5-1, 5-2, 5-3, 5-4, 5-36, 6-29, 6-35, 6-40, 7-7, 8-5, 8-30, G-1, G-2, G-3, G-5, G-26, G-28, G-29, G-39, G-41, G-53
  California Code of Regulations, Title 24, 2-1, 3-1, 5-1, 6-1, 7-1 G-1, G-19, G-41
  History of the Standards, 1-1, 1-6, 1-8
  Low-Rise Residential Standards, G-16, G-24, G-26
  Multiple Orientations
    No Orientation Restrictions, 8-7
    Orientation Restrictions, 8-7
  Nonresidential Standards, 1-7, 1-8, 1-9, 1-22, 1-23
  Title 24, 1-1, 1-8, 1-9, 1-13, 1-14, 1-15, 1-16, 1-25, 2-3, 2-14, 2-26, 4-8, 5-2, 7-5, 7-8, 7-11, 7-15, 7-18, 8-1, 8-4, 8-12, 8-16, G-3, G-5, G-18, G-29, G-43
Standby Loss, 6-3, G-3, G-41
Straw Bale Construction, 3-4, 8-1, 8-30
Subdivisions, 8-1, 8-5, 8-6, 8-7
  Individual Building Approach, 8-5
Subordinate Occupancy, G-3, G-41
System, 1-6, 2-1, 2-33, 3-18, 3-19, 3-20, 3-23, 3-28 to 3-43, 4-1, 4-4, 4-7, 4-13, 5-6, 5-25, 5-34, 5-35, 6-1, 6-2, 6-3, 6-4, 6-5, 6-6, 6-9, 6-11, 6-13, 6-15, 6-30, 6-31, 6-32, 6-35, 6-38, 6-40, 6-41, 7-21, 8-18, 8-19, 8-20, 8-23, G-2, G-3, G-21, G-25, G-26, G-35, G-41

T

Thermal Mass, 5-1, 5-6, 5-20, 5-27, G-2, G-3, G-10, G-42, G-46, G-53, G-54
  Computer Methods, 5-1, 5-6, 5-20, 5-27
  Coverings, G-42, G-54
  Thermal Mass Worksheet, G-10
Tilt, 5-11, 5-17
Title 24, 1-1, 1-8, 1-9, 1-13, 1-14, 1-15, 1-16, 1-25, 2-3, 2-14, 2-26, 4-8, 5-2, 8-1, 8-4, 8-12, 8-16, G-3, G-5, G-18, G-29, G-43
  Legal Requirements, 1-1
  Part 1, 1-1, 1-7, 1-9, 1-13, 1-16, 1-22, 2-27, 3-24, 5-1, 5-2, 5-5, 6-3, 6-35, 8-2, 8-12, 8-16, G-7, G-8, G-19, G-25, G-26, G-43
  Part 6, 1-1, 1-8, 1-9, 1-12, 1-13, 1-14, 1-15, 1-16, 1-17, 1-23, 2-1, 2-26, 3-1, 3-20, 5-1, 5-34, 5-35, 6-1, 6-3, 6-4, 6-5, 6-6, 6-7, 6-8, 6-9, 6-10, 6-11, 6-12, 6-13, 6-15, 6-16, 6-17, 6-20, 6-27, 6-28, 6-35, 7-1, 7-5, 7-8, 7-11, 7-15, 7-18, 8-1, 8-4, 8-13, 8-20, 8-28, G-1, G-7, G-10, G-18, G-19, G-29, G-41, G-43, G-48

U

Unconditioned Space, 5-1, 5-9, 5-16, 5-24, 5-26, G-3, G-45
Uniform Building Code (UBC) , 1-7, 1-8, 1-22, 1-23, 2-28, 2-29, 3-9, 4-11, 7-5, 7-8, 7-11, 7-18, 8-15, G-1, G-3, G-6, G-7, G-21, G-29, G-40
Uniform Mechanical Code (UMC), 1-3, 2-14, 2-15, 2-24, 2-25, 2-34, 2-36, 2-37, 2-38, 2-39, 2-40, 4-5, 4-6, 4-11, 8-12, G-3, G-25
U-Value, 1-11, 1-12, 2-19, 3-3, 5-10, 5-12, 5-13, 5-16, 5-36, 8-9, G-3, G-14, G-35, G-43, G-44, G-45, G-54, G-55, G-56

V

Vapor Barrier, 2-1, 2-22, 8-15, G-3, G-28, G-46
Volume, 2-29, 5-8, 5-29, 6-25, 6-35, 8-12, G-2

W

Wall Insulation, 2-1, 2-7, 2-8, 2-9, 2-10, 2-11, 3-3, 3-6, 5-12, 5-13
Warren-Alquist Act, 5-2, G-7
Water Heating, 1-4, 1-5, 1-11, 1-24, 3-1, 3-20, 3-21, 3-22, 5-1, 5-3, 5-4, 5-6, 5-26, 5-33, 5-36, 6-1, 6-3, 6-7, 6-9, 6-10, 6-11, 6-12, 6-14, 6-19, 6-35, 6-37, 6-38, 6-41, 7-1, 7-7, 7-8, 7-10, 7-21, 8-13, G-2, G-7, G-10, G-26
  Active Solar Water Heaters, 6-4, 6-5, 6-37
  Additions, 6-1, 6-8, 6-9, 6-11
  Auxiliary Inputs
    Active Solar Water Heaters, 6-4, 6-5, 6-37
    Passive Solar Water Heaters, 6-4, 6-5, 6-37
    Wood Stove Boiler, 5-33, 6-4, 6-5, 6-13, 6-17, 6-27, 6-37, 7-12, 8-13
  Case Studies, 6-1, 6-27
  Combined Hydronic Space and Water Heating, 6-11, 6-12, 6-17, 6-41, G-25
  Computer Methods, 6-1
  Distribution Systems, 6-1, 6-6, 6-35
    Hot Water Recovery + Recirculation Demand Pumping, 6-38
    Pipe Insulation, 2-1, 2-33, 2-34, 2-35, 6-5, 6-6, 6-9, 6-38, 6-40, 6-41, 7-12
    Pipe Insulation + Recirculation Demand Pumping, 6-38
  Energy Use, 6-3, 6-7, 6-8, 6-10, 6-11, 6-12, 6-13, 6-14, 6-15, 6-16, 6-17, 6-19, 6-21, 6-22, 6-23, 6-24, 6-25, 6-27, 6-28
  Passive Solar Water Heaters, 6-4, 6-5, 6-37
  Pool and Spa Heating Systems and Equipments, 2-44
    Recirculation System
      Temperature Controlled, 6-5, 6-38, 6-40
      Time Controlled, 6-5, 6-38, 6-40
      Continuous, 6-5, 6-6, 6-38, 6-40
      Demand Pumping, 6-5, 6-38, 6-41
      Standard, 6-1, 6-3, 6-4, 6-5, 6-6, 6-7, 6-8, 6-10, 6-11, 6-12, 6-13, 6-14, 6-19, 6-20, 6-27, 6-28, 6-35, 6-36, 6-37, 6-38
  Prescriptive Packages, 6-1, 6-5, 6-7
  Recovery Energy, 6-25, 6-28
  Recovery Load, 6-11, 6-13, 6-14, 6-15, 6-16, 6-19, 6-20, 6-25, 6-26, 6-27
  Solar Water Heating, 2-1, 2-35, 5-6
  Water Heaters, 1-24, 2-14, 2-34, 3-21, 6-4, 6-8, 6-9, 6-12, 6-13, 6-14, 6-16, 6-25, 6-35, 7-12, 7-24
    Directory of Certified Water Heaters, 6-36
    Electric, 6-3, 6-4, 6-13, 6-17, 6-22, 6-24, 6-25, 6-35, 6-36
Water Heating (cont.)
  Water Heaters (cont.)
    Energy Factor, 1-17, 2-29, 2-32, 3-22, 6-3, 6-4, 6-5, 6-9, 6-10, 6-13, 6-15, 6-18, 6-21, 6-22, 6-23, 6-25, 6-27, 6-29, 6-35, 6-36, 6-37, 7-10, 7-12, 7-15, G-2, G-19
    External Tank Insulation, 6-37
    Gas, 6-4, 6-11, 6-13, 6-15, 6-16, 6-17, 6-21, 6-24, 6-25, 6-35, 6-36
    Indirect Gas, 6-4, 6-11, 6-13, 6-15, 6-16, 6-25, 6-35, 6-36, 6-4, 6-11, 6-13, 6-15, 6-16, 6-25, 6-35, 6-36
    Instantaneous Electric, 6-4, 6-13, 6-25, 6-35, 6-36
    Instantaneous Gas, 3-22, 6-4, 6-13, 6-25, 6-35, 6-36
    Large Storage Gas, 6-4, 6-11, 6-13, 6-15, 6-16, 6-35, 6-36
    Multiple, 6-11, 6-14
    Recovery Efficiency, 3-22, 6-13, 6-16, 6-17, 6-18, 6-25, 7-12, G-3, G-30
    Standard Water Heater, 6-4, 6-35, 6-36 Standby Loss, 6-3, G-3, G-41
    Storage Electric, 6-4, 6-13, 6-17, 6-22, 6-35, 6-36
    Storage Heat Pump, 6-4, 6-13, 6-23, 6-35, 6-36
    Type, 6-1, 6-3, 6-7, 6-12, 6-13
  Water Heating System, 6-7, 6-35
    When are Water Heating Forms Required?, 6-7
Water Heating Calculation Method, 6-1, 6-37
  Active Solar Credit, 6-16
  Adjusted Recovery Load, 6-11, 6-13, 6-15, 6-16, 6-25, 6-26
  Basic Approach, 6-1
  Basic Energy Use (BEU), 6-21, 6-22, 6-23, 6-24, 6-25
  Distribution System Credit/Penalty, 6-20
  f-Chart, 5-33, 5-35, 6-16, 6-27, 8-28, 8-29
  Forms, 6-1, 6-7, 6-11
    Combined Hydronic Space and Water Heating, 6-11, 6-12, 6-17, 6-41
    Water Heating for Multi-Family, 6-11, 6-14
    Water Heating for Single Family with Multiple Heaters, 6-14
    Water Heating Worksheet, 6-11, 6-12
  Jacket Loss, 6-16, 6-25
  Passive Solar Credit, 6-17

Water Heating Calculation Method (cont.)
Proposed Energy Use, 6-3, 6-7, 6-8, 6-10, 6-11, 6-12, 6-13, 6-14, 6-27, 6-28
Solar Fraction, 6-16
Solar Rating and Certification, 2-35, 6-17
Water Heating Calculation Method (cont.)
Standard Energy Use, 6-3, 6-7, 6-8, 6-10, 6-11, 6-12, 6-14, 6-19, 6-27, 6-28
Standard Recovery Load, 6-11, 6-13, 6-14, 6-19, 6-20, 6-27
Wood
Stove Boiler Credit, 6-13, 6-17, 6-27
Weatherstripping, 2-21, G-3, G-46
Weighted Averaging, G-3, G-39, G-47, G-53
West-Facing, G-3, G-28, G-47
Wood Stove Boiler, 5-33, 6-4, 6-5, 6-13, 6-17, 6-27, 6-37, 7-12, 8-13

Z

Zonal Control, 5-1, 5-6, 5-24, 5-30, 5-32, 8-1, 8-16, 8-17, G-3, G-26, G-47
Habitable Room, 8-16
Heat Pumps, 2-31, 5-6, 8-1, G-14, G-16, G-17, G-26, G-35, G-49
Setback Thermostats, 2-1, 2-30, 2-31, 3-18, 8-17
Temperature Sensors, 8-16
Zone, 1-4, 2-8, 3-16, 5-8, 5-14, 5-26, 5-30, 5-31, 6-5, 6-18, 6-23, 6-26, 6-27, 8-7, 8-15, G-2, G-3, G-6, G-7, G-46, G-47, G-57