CALIFORNIA ENERGY COMMISSION
1516 Ninth Street
Sacramento, California 95814

Main website: www.energy.ca.gov

NOTIFICATION OF APPROVAL
OF STANDARD U-FACTOR DATA FOR
METAL FRAMED WALLS FOR LOW-RISE RESIDENTIAL BUILDINGS

As part of the adoption of the 2005 Building Energy Efficiency Standards, the California Energy Commission adopted Joint Appendix IV, which contains standard U-factor, C-factor and thermal mass data for roof, wall and floor construction assemblies (see p. IV-1 of the Joint Appendices at: http://www.energy.ca.gov/title24/2005standards/2004-10-06_400-03-001-JAF.PDF). The data in Joint Appendix IV must be used for all residential and nonresidential compliance approaches, including the mandatory requirements, prescriptive envelope component approach, prescriptive overall envelope approach and performance approach for nonresidential, high-rise residential and hotel/motel buildings, and the mandatory requirements, prescriptive and performance approaches for low-rise residential buildings.

If a construction assembly is not adequately represented in Joint Appendix IV, an applicant may request approval by the Energy Commission's Executive Director for different data for that construction data. The Executive Director will base the decision on the application on the technical justification submitted by the applicant. Approved standard data for the construction assembly will be published as an addendum to Joint Appendix IV for use in all compliance approaches.

This Notification of Approval of Standard U-factor Data for Metal-Framed Walls in Low-Rise Residential Buildings authorizes the use of the data shown in the attached Table IV.11.a with the limitations in the description following the table. Table IV.11.a is officially added as an addendum to Joint Appendix IV.

Approved by:

Claudia Chandler for

SCOTT W. MATTHEWS
Acting Executive Director
Dated June 8, 2005

Table IV.11a – U-factors of Metal Framed Walls for - Low-Rise Residential Construction[4]

				Rated R-value of Continuous Insulation[2]					
				R-0	R-2	R-4	R-5	R-6	R-7
Spacing	**Cavity Insulation R-Value**	**Nominal Framing Size**		**A**	**B**	**C**	**D**	**E**	**F**
16 in. OC	None	Any	**1**	NA	NA	NA	NA	NA	NA
	R-11	2x4	**2**	0.200	0.137	0.107	0.097	0.088	0.081
	R-13	2x4	**3**	0.192	0.132	0.105	0.095	0.087	0.080
	R-15	2x4	**4**	0.186	0.129	0.102	0.093	0.085	0.078
	R-19[1]	2x6	**5**	0.154	0.112	0.092	0.084	0.077	0.072
	R-21	2x6	**6**	0.151	0.110	0.090	0.083	0.076	0.071
	R-19[1]	2x8	**7**	0.134	0.102	0.085	0.078	0.072	0.067
	R-22	2x8	**8**	0.129	0.099	0.082	0.076	0.071	0.066
	R-25	2x8	**9**	0.125	0.096	0.081	0.075	0.069	0.065
	R-30[1]	2x8	**10**	0.120	0.093	0.078	0.073	0.068	0.063
	R-30	2x10	**11**	0.109	0.086	0.073	0.068	0.064	0.060
	R-38[1]	2x10	**12**	0.104	0.082	0.071	0.066	0.062	0.058
	R-38	2x12	**13**	0.095	0.077	0.067	0.062	0.059	0.055
	Foamed Plastic or Cellulose Insulation[3]	2x4	**14**	NA	NA	NA	NA	NA	NA
		2x6	**15**	NA	NA	NA	NA	NA	NA
		2x8	**16**	NA	NA	NA	NA	NA	NA
		2x10	**17**	NA	NA	NA	NA	NA	NA
		2x12	**18**	NA	NA	NA	NA	NA	NA
24 in. OC	None	Any	**24**	NA	NA	NA	NA	NA	NA
	R-11	2x4	**25**	0.189	0.131	0.104	0.094	0.086	0.079
	R-13	2x4	**26**	0.181	0.127	0.101	0.092	0.084	0.078
	R-15	2x4	**27**	0.175	0.123	0.099	0.090	0.082	0.076
	R-19[1]	2x6	**28**	0.144	0.107	0.088	0.081	0.075	0.070
	R-21	2x6	**29**	0.141	0.105	0.086	0.080	0.074	0.069
	R-19[1]	2x8	**30**	0.126	0.097	0.081	0.075	0.070	0.065
	R-22	2x8	**31**	0.121	0.094	0.079	0.073	0.068	0.064
	R-25	2x8	**32**	0.117	0.091	0.077	0.071	0.067	0.063
	R-30[1]	2x8	**33**	0.112	0.088	0.075	0.069	0.065	0.061
	R-30	2x10	**34**	0.102	0.081	0.070	0.065	0.061	0.058
	R-38[1]	2x10	**35**	0.096	0.077	0.067	0.063	0.059	0.056
	R-38	2x12	**36**	0.088	0.072	0.063	0.059	0.056	0.053
	Foamed Plastic or Cellulose Insulation[3]	2x4	**37**	NA	NA	NA	NA	NA	NA
		2x6	**38**	NA	NA	NA	NA	NA	NA
		2x8	**39**	NA	NA	NA	NA	NA	NA
		2x10	**40**	NA	NA	NA	NA	NA	NA
		2x12	**41**	NA	NA	NA	NA	NA	NA

NOTES:

1. Higher density fiberglass batt is required in these cases.
2. Continuous insulation may be installed on either the inside or the exterior of the wall, or both.
3. Foamed plastic and cellulose shall fill the entire cavity. Cellulose shall have a binder to prevent sagging.
4. To use these values the framing members must be 18 gauge or thinner.

This table contains U-factors for steel or metal-framed walls in low-rise residential buildings where the thickness of the framing members is 18 gauge or thinner. Table IV.11 in Joint Appendix IV must be used for steel or metal-framed walls in nonresidential buildings (including high-rise residential buildings and hotels and motels) and in low-rise residential buildings if the thickness of the framing members is thinner than 18 gauge.

If continuous insulation is not used, then choices are made from Column A. In this case, the insulation is installed only between the framing members. When continuous insulation is also used, it is typically installed on the exterior side of the wall, but can also be used on the inside. The continuous insulation is typically either expanded or high-density polystyrene.

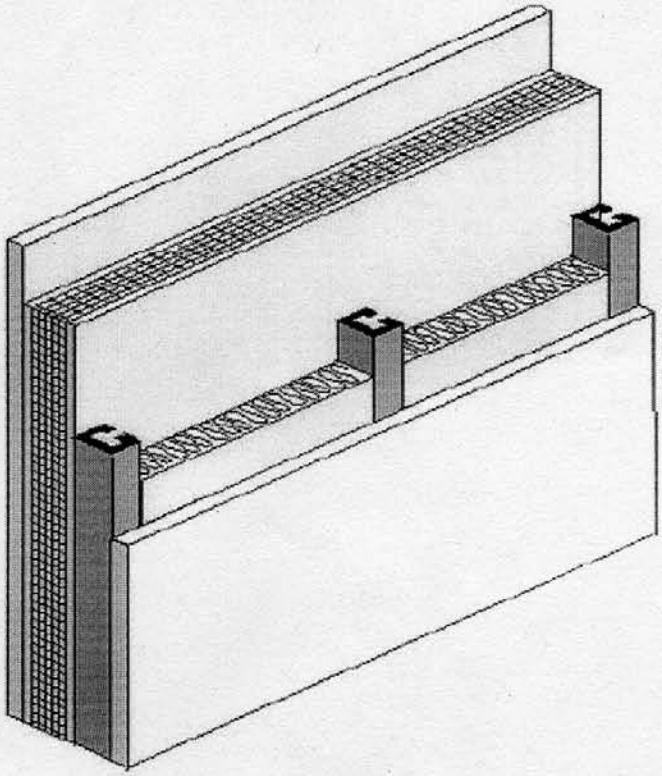

Figure IV.11a– Low-Rise Residential Metal Framed Wall

When this table is used manually, the R-value of continuous insulation shall be equal to or greater than the R-value published in the continuous insulation columns. Continuous insulation of at least R-2 must exist in order to use values for continuous insulation. No interpolation is permitted when data from the table is used manually. Energy Commission approved Alternative Calculation Methods (ACMs), however, may determine the U-factor for any amount of continuous insulation or for unusual construction assemblies using Equation IV-1 and Equation IV-2 of Joint Appendix IV.

Assumptions. Values in this table were calculated using the zone calculation method. The construction assembly assumes an exterior air film of R-0.17, an outer covering of siding or stucco averaging R-0.18, building paper of R-0.06, continuous insulation (if any), the framing/cavity insulation layer, ½" gypsum of R-0.45 gypsum board and an interior air film of R-0.68. The framing factor is assumed to be 25% for 16-inch stud spacing and 22% for 24-inch stud spacing. To account for the increased wall framing percentage, the frame spacing input to the EZ Frame program is reduced to 13.218 inches for 16-inch stud spacing and 15.231 inches for 24-inch stud spacing. The stud web thickness is assumed to be 0.038 inches, which is a 50/50 mix of 18 and 20 gauge C-studs. This value was confirmed to be representative of low-rise residential construction by polling several California-based light-gauge steel structural engineers and light-gauge steel framers. Foam plastic or cellulose are assumed to entirely fill the cavity and have a thermal resistance of R-3.6 per inch. Actual cavity depth is 3.5 inches for 2x4, 5.5 inches for 2x6, 8 inches for 2x8, 10 inches for 2x10 and 12 inches for 2x12. High density R-30 insulation is assumed to be 8.5 inches thick batt and R-38 is assumed to be 10.5 inches thick.