Programmable Communicating Thermostat (PCT)
Systems Integration (SI)
Interfaces (I/F)

Ron Hofmann

PIER DR R&D Program Advisor

February 16, 2006

Reasons for SI I/F Specs

- **One PCT SI I/F for all of CA (US)**
  - Retail purchased at Home Depot, etc.
  - Consumer owned, installed, maintained
- **Common signaling throughout CA (US)**
- **Works with any minimum AMI system**
  - Signals synched with AMI resolution
- **Compatible with legacy technologies**
  - Preserve richness of thermostat options

Why are we here?

- **A Straw Man Concept (R&D)**
  - Common signaling (broadcast packets)
  - Plug-in HVAC connection (plug & work)
  - Expansion port (evolutionary features)
  - Additional human information (override)
- **Title 24 Standards**
  - Industry works it out with CEC

Four R&D PCT Interfaces

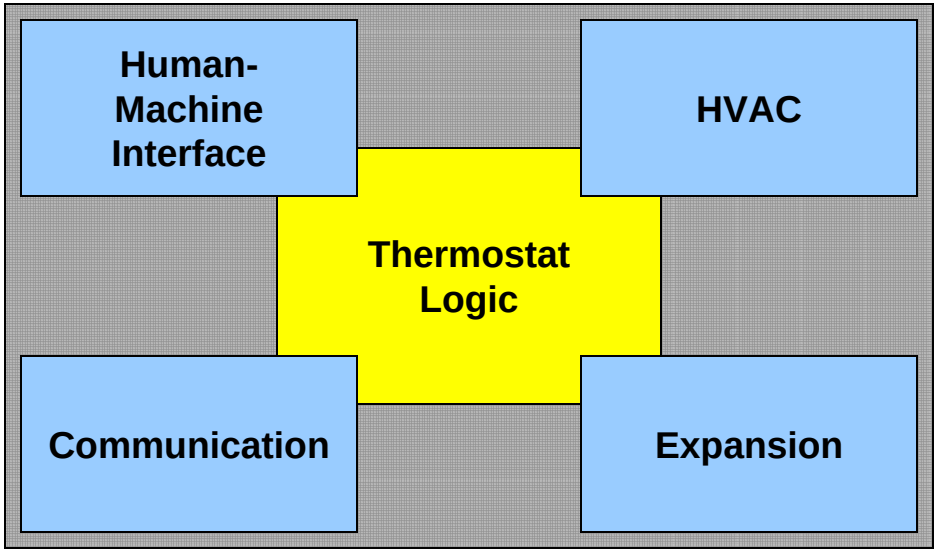
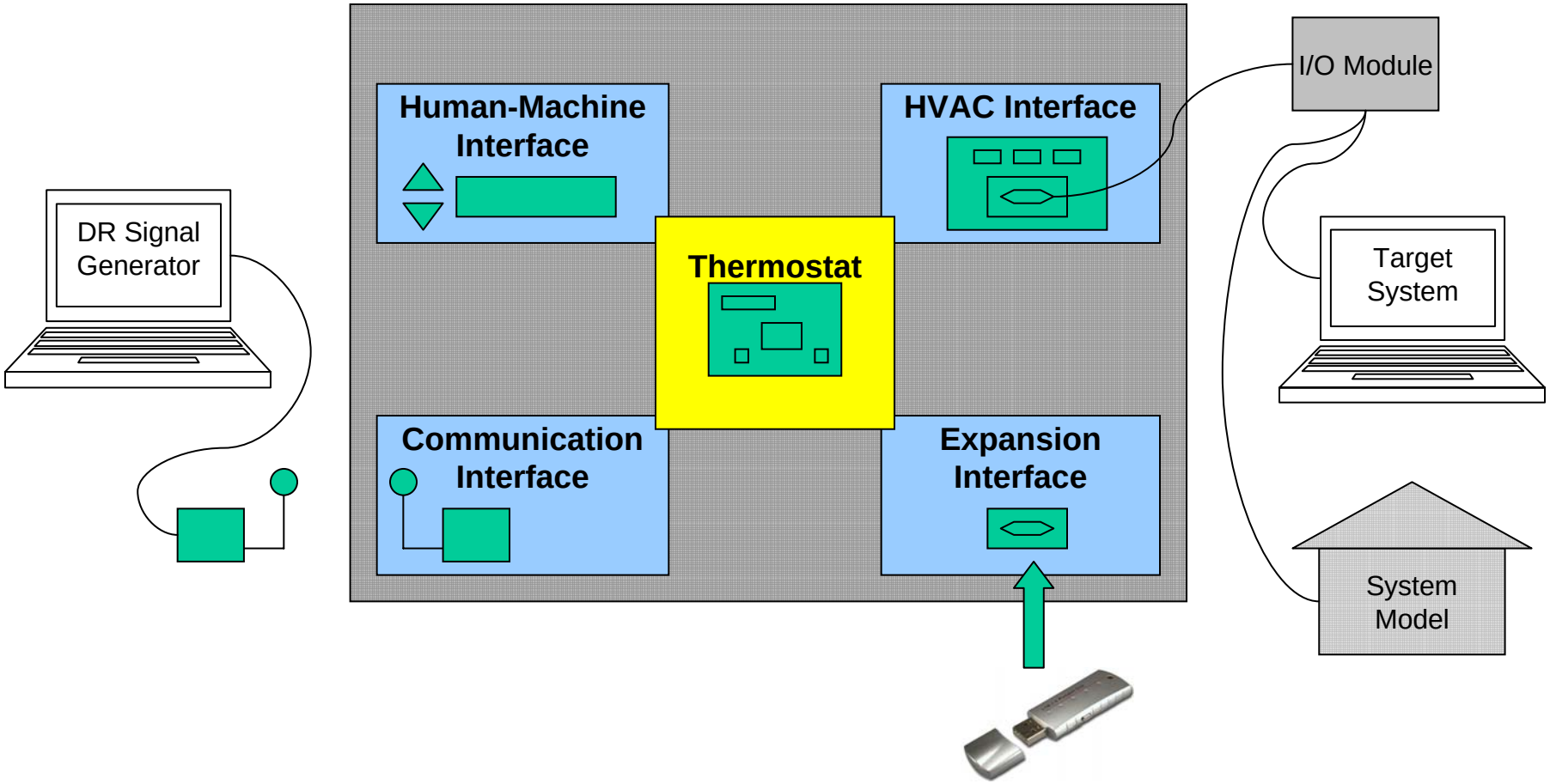
Proof-of Concept Prototype