ASSOCIATED ROOFING CONTRACTORS OF THE BAY AREA COUNTIES, INC.

8301 EDGEWATER DRIVE, SUITE 202, OAKLAND, CALIFORNIA 94621

TELEPHONE: (510) 635-8800 FAX: (510) 569-ROOF [7663]

WEBSITE: WWW.ARCBAC.ORG EMAIL: INFO@ARCBAC.ORG

September 19, 2007

Chris Gekas
California Energy Commission
1516 Ninth Street, MS 25
Sacramento, CA 95814-5512

Re: Comments on the "Cool Roofing" Provisions of the Pre-45 Day Language Documents, 2008 Building Energy Efficiency Standards

Dear Mr. Gekas:

This Association represents union roofing contractors in 14 Metropolitan San Francisco Bay Area counties. We are writing today to offer our comments on some of the "cool roofing" provisions contained in the Pre-45 Day Language Documents prepared in conjunction with the soon-to-be-proposed 2008 Building Energy Efficiency Standards.

Subchapter 2, Section 118 (i) 1

In our testimony at the June 13 Staff Workshop and in subsequently submitted written comments, we observed that draft Section 118 (i) 1 was flawed because it did not encompass all types of roofing product. We are pleased to see that this provision has been changed along the lines we suggested. Thank you.

Subchapter 6, Section 149 (b) 1 B iv

A number of speakers at the June 13 Workshop pointed out serious flaws in the proposed roof insulation requirements contained in draft Sections 149 (b) 1 B iv and 149 (b) 1 B v. These included an apparent underestimation by the CEC of the number of subject buildings with less than R-19 insulation and the difficulty – and potentially astronomical cost – of requiring additional insulation to be installed above the roof deck.

The two Sections at issue have been combined into one and substantial changes have been made to the regulatory language. It appears that the intent of the CEC is to address the concerns voiced in June, but revised Section 149 (b) 1 B iv is not entirely successful in doing so. Several provisions of the revised Section need clarification and one of the new Exceptions is simply impractical.

The term "roof insulation" should be defined.

Draft Sections 149 (b) 1 B iv and 149 (b) 1 B v specified that any additional insulation required could only be applied above the roof deck. The phrase "above the roof deck" does not appear in the newly revised and consolidated Section 149 (b) 1 B iv. I assume that in removing this phrase from the draft regulation, the intent of the CEC is to indicate that the insulation requirements set forth in Table 149-A can be met in a number of ways: (1) by adding insulation above the roof deck, (2) by adding insulation immediately below the roof deck, or (3) by adding insulation both above and below the roof deck. If this is indeed the case, **Section 149 (b) 1 B iv should be revised to clearly define "roof insulation" to encompass above-the-deck applications, below-the-deck applications and combinations thereof**.

Owners, contractors and other affected parties who have not followed the rule development process will not be aware that the limiting term "above the roof deck" was deleted along the way. As a result, they may misconstrue the regulation to only permit the application of additional insulation above the roof deck. The lack of a clear definition of "roof insulation" and the fact that at least two (and arguably all three) of the new Exceptions clearly pertain only to above-the-roof-deck applications would tend to support such a mistaken conclusion.

Exception 1 to Section 149 (b) 1 B iv needs to be revised.

There is a "loophole" in Exception1 to revised and consolidated Section 149 (b) 1 B iv that needs to be closed. As it is currently configured, the Exception hinges solely on the state of the existing roof system. It is silent about the required state of the replacement roof system. Accordingly, the Exception would seem to allow the replacement of an R-11 roof system with an entirely uninsulated roof system. Clearly, **Exception 1 needs to be revised to state that it only applies if the existing roof system has at least R-11 insulation and the replacement roof system has at least R-11 insulation**.

As suggested previously, a definition of "roof insulation" will clarify that when Exception 1 states, "the existing roof is insulated with at least R-11 insulation", it is referring to the total R-value of insulation installed both above and below the roof deck

Exception 2 to Section 149 (b) 1 B iv is impractical and needs to be revised.

As a number of speakers pointed out at the June 13 Workshop, adding insulation above the roof deck can present daunting challenges and involve considerable expense. We appreciate the CEC's attempt to respond to these concerns by proposing new Exception 2, which allows a reduced amount of insulation to be installed above the roof deck in order to maintain curb heights of at least 4 inches. **Unfortunately, the roofing**

industry standard for base flashings is a minimum of 8 inches. This standard is contained not only in industry "bibles", such as the NRCA (National Roofing Contractors Association) Roofing and Waterproofing Manual and the ARMA (Asphalt Roofing Manufacturers Association) Manual, but also in countless specifications published by individual manufacturers (see attached Exhibits A - E). The "8-inch rule" applies to every major type of low slope roofing system, from built-up to modified bitumen to single ply, and adherence to it is typically a condition of the issuance a manufacturer's warranty.

Given the ubiquitous nature of the "8 inch rule", professional roofing contractors violate it at their peril. Failing to adhere to the industry "standard of care" not only opens the contractor up to a potential construction defects lawsuit in the event of a problem, but also voids the manufacturer's warranty on the roofing system. Accordingly, few (if any) knowledgeable roofing contractors would ever consider availing themselves of the compliance option offered in new Exception 2 to revised Section 149 (b) 1 B iv. **In order to be meaningful, practical and useful, Exception 2 must be revised to allow a minimum curb height above the finished roof of 8 inches.**

Exception 3 to Section 149 (b) 1 B iv needs to be revised

During the June 13 Workshop, several speakers inquired about how the R-value of tapered roof insulation would be determined. We are pleased to see that the CEC has embraced the suggestion that tapered insulation meet an average, rather than a minimum R-value. **Exception 3 should be revised, however, to allow the thickness (and R-value) of insulation installed at curbs to be limited in order to maintain a minimum height above the finished roof of 8 inches, as suggested above.**

A note on the assumption underlying these comments

As stated at the outset, a major assumption underlying our comments is that the CEC removed the phrase "above the roof deck" from the draft regulation for a specific purpose: to indicate that the insulation requirements set forth in Table 149-A can be met by adding insulation above the roof deck, immediately below the roof deck or both above and below the roof deck. While we believe that additional revisions are needed to clarify the revised proposal, we heartily endorse the overall approach, which is both reasonable and flexible.

On the other hand, as it is currently written the revised regulation can be read to continue to require that any additional insulation required must be added above the roof deck, even if it does not state this mandate as directly as did the previous draft. **If the CEC's actual intent is to limit building owners' and roofing contractors' roof insulation compliance options to above the roof deck applications, this Association and the entire California roofing industry will continue to vigorously object.**

Thank you for the opportunity to submit these comments and suggestions on the Pre-45 Day Language Documents. If you have any questions, please feel free to contact me by telephone at (510) 635-8800, extension 344, or by e-mail at director@arcbac.org.

Sincerely,

William T. Callahan, Jr., Ph.D.
Executive Director

enclosures

EXHIBIT 'A'

The NRCA

General Roofing Project Considerations

Manual

Fifth Edition

12.2 Curbs

Prefabricated units using curbs that have built-in metal base flashing flanges designed to be stripped in on the flat are not recommended for use with bituminous roof membranes. Some single-ply roof membranes may use prefabricated curbs with metal "self-flashing" flanges to be embedded in a roof membrane. NRCA recommends the use of raised curbs that provide for proper application of a roof membrane, offer adequate vertical extension, permit proper termination of membrane base flashing and provide space for installation of sheet-metal counterflashings.

12.3 Nailers

It is recommended that well-secured, decay-resistant preservative pressure-treated wood blocking/nailers be carefully designed and provided at appropriate roof perimeters and penetrations for fastening membrane flashings and sheet-metal components. Wood nailers should be provided at the top of all prefabricated curbs for attachment of membrane base flashings.

When nailers are required to be fire-retardant treated (FRT), NRCA recommends that designers specify exterior FRT lumber even if a nailer will not be exposed. Problems have been reported with corrosion of fasteners and other metal components when interior FRT lumber has been used in roof details even in nonexposed situations. Additionally, designers should consider placing a separator such as a felt or other membrane between FRT lumber and metal components because of potential compatibility problems.

12.4 Flashings

There are two types of flashings: membrane base flashings and sheet-metal flashings.

12.4.1 Membrane Base Flashing

ALL ROOF TYPES

Membrane base flashing is generally composed of strips of compatible membrane materials used to close in or flash roof-to-vertical surface intersections or transitions. SPF is a self-flashing material, which means the foam and coating that are used to provide the roof system are integrally installed to form base flashings. NRCA recommends the height of a base flashing be no lower than 8 inches (200 mm).

Membrane base flashings should be fastened to prevent displacement and/or slippage. A wood nailer strip or suitable fixture allowing mechanical fastening of a membrane base flashing should be provided along its upper edge. Depending on the roof system, fastening may be accomplished with cap-head nails, securely fastened termination bars or other appropriate mechanical fastening devices approved by the membrane manufacturer.

12.4.2 Metal Flashing — Counterflashing and Cap Flashing

For mechanical units and other raised curb equipment, sheet-metal counterflashings should be installed to cover the top edge and overlap the upper portion of membrane base flashings unless the integral flange of the curb-mounted unit adequately covers the top of the membrane flashings.

Because metals generally have a higher coefficient of expansion than roof membranes, metal flashing should be isolated from the base flashing or roof membrane whenever possible to prevent metal movement that may fatigue and/or split the membrane. NRCA suggests avoiding flashing details that require metal flanges to be embedded or sandwiched into a roof membrane. When used, metal gravel stops should be raised above the waterline or surface of the roof system by using tapered wood blocking or edge strips. The metal flanges of metal gravel stops should be set on top of the completed roof membrane and be fastened at approximately 3 inches to 6 inches (75 mm to 150 mm) on center to the perimeter wood nailer. A metal flange should then be stripped-in with membrane flashing or stripping plies. See the Construction Details section in this manual.

For all walls that receive membrane base flashings, metal counterflashings should be installed into or on the wall above the base flashing. NRCA suggests the design of counterflashings consist of separate reglet and counterflashing pieces, allowing installation of the sheet-metal counterflashing after the membrane base flashing is complete. Projects where single-piece counterflashing has been installed is often difficult to flash properly during future reroofing and when membrane flashing maintenance is necessary without deforming or requiring the replacement the metal. Sheet metal is not recommended to be used as an embedded base flashing material with bituminous roof systems and other membrane roof systems where differential movement may contribute to fatiguing, cracking or splitting of the roof membrane.

When precast walls are used, a designer should carefully consider the flashing provisions required to properly interface the roof to the precast wall units. Cast-in raggles or reglets frequently used for this purpose are difficult to

EXHIBIT 'B'

Built-Up Roofing Systems Design Guide

SECTION 1
Design Considerations

SECTION 2
Materials

SECTION 3
Application and Tolerances

SECTION 4
Acknowledgements

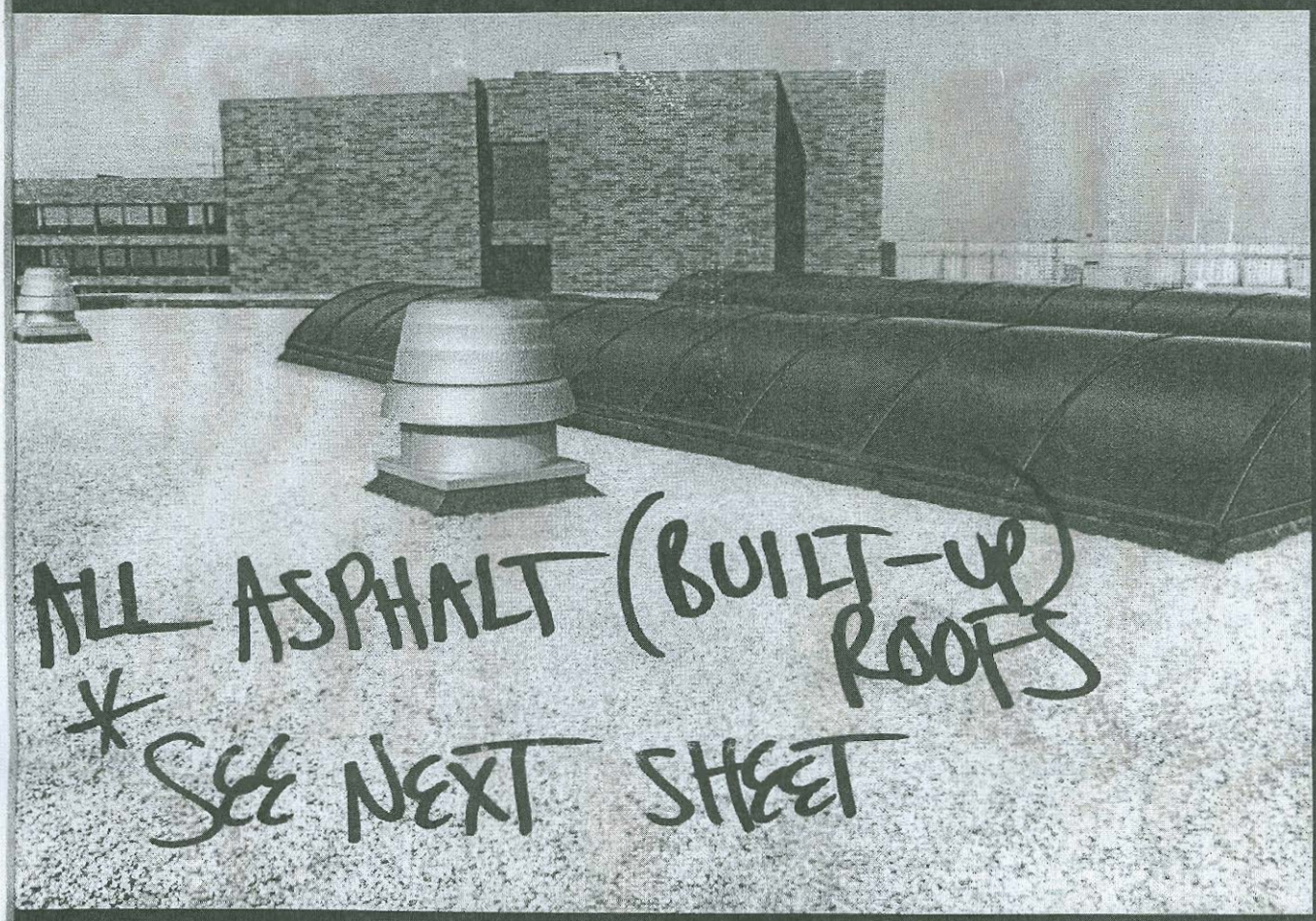

BUR
Built-Up Roofing, A System Above The Rest.

ASPHALT ROOFING MANUFACTURERS ASSOCIATION

FLASHING AND CANTS

There are two basic types of flashing:

Composition flashing (base flashing) extends from the surface of the roof up the vertical surface of a building. A cant strip should be installed at the base of the vertical wall to provide a transition for the roofing material. Base flashing should extend not less than (a nominal) 8″ and not higher than (a nominal 14″) above the finished roof surface. Walls requiring flashing higher than 14″ should receive special moisture-proofing. A wood nailer strip or suitable detail allowing mechanical fastening of the base flashing at the top must be provided. Masonry surfaces should be primed with asphalt concrete primer.

Metal Flashing (counterflashing and cap flashing) have high coefficients of expansion and should be isolated from the roof membrane to prevent metal movements from splitting the membrane. Flashing details that require metal flanges to be sandwiched into the roof membrane be avoided if possible.

Gravel stops should be raised above the waterli using tapered cants and wood blocking. When th possible, the metal flanges for low profile gravel s should be set in mastic on top of the completed r membrane and nailed at close intervals to the wo The metal flange should then be primed with asp primer and felt flashing strips applied. Interior dra recommended. A metal edging should never be u water dam or waterstop. The practice of connecti metal to the roof membrane should be avoided. F projections through the membrane require metal or the insertion of roof jacks into the membrane. flanges should be set in mastic over the complete membrane, primed and stripped in with flashing

MEMBRANE

ASPHALT

Asphalts are applied at their EVT* plus or minus 25 °F.

*(*EVT – Equiviscous Temperature, the temperature at which a roofing asphalt attains a viscosity of 125 centistokes.)*

If the EVT is not known, generally recommended asphalt temperatures at point of application are:

Type I — 350 — 400 °F
Type II — 375 — 425 °F
Type III — 375 — 425 °F
Type IV — 400 — 450 °F

Asphalt should not be heated to or above its Fl or its final blowing temperature. The asphalt sho be heated above 525 °F nor held between 500-52 more than 4 hours.

Maximum storage temperature is 325 °F.

COAL TAR

Coal tar should not be heated above 425 °F. Types I or III are for use on inclines up to ½″ per foot for organic felt using back-nailing of felts when slope exceeds ¼″. Coal tar Types I and III are for use on inclines up to ¼″ per foot for fiber glass felts and are applied at temperatures of 350-400 °F.

EVT Type I—360 ± 25 °F
Type III—375 ± 25 °F

Maximum storage temperature is 250 °F.

Kettle temperature recommended is 425 °F wi application temperature ranging from 325° to 4C

ASPHALT PRIMER

Application of primer to concrete, masonry and metal surfaces provide for adhesion of cements and hot bitumens. The priming of exposed or weathered surfaces which cannot be made completely clean or dust- serve to set the surface and provide improved ac Primer must be permitted to dry.

FASTENERS

Fasteners should provide the required withdrawal resistance and be appropriate for the substrate and membrane. Various mechanical fasteners are used. If through visual observation fastener deficiencies are noted while the roof is being installed the deficiencies can be corrected by removing and replacing loose or damaged fasteners, as needed, spaced appropriately. The for the spacing between individual fasteners is from the spacing specified but in no case can th of fasteners per roof insulation board be less the required number.

EXHIBIT 'C'

Johns Manville

Bituminous Flashings

BUILT-UP

9.1 General Information

9.1.1 Flashings are used to make watertight any roof area where the roof membrane terminates, is interrupted, or intersects an area or projection having a marked change in slope or direction. This condition can occur at gravel stops, curbs, parapets, walls, built-in gutters, expansion joints, skylights, vents, drains, pipes, and other penetrations.

9.1.2 Flashings are generally divided into two categories: base flashings and counterflashings. Base flashings are, in a sense, a continuation of the membrane, turned up onto a surface that is in a different plane from the field of the roof, and installed as a separate operation. They are usually fabricated using a non-metallic material, such as an asphalt-coated felt. Counterflashings, or cap flashings, can be of metal, coated felt, or other materials. They shield and seal the exposed edges of the base flashing.

9.1.3 The combined use of non-metallic materials for base flashings and metal for counterflashings brings out the best in each material. Bituminous base flashing materials have the same coefficient of expansion and contraction as the roof membrane, and they work together as a unit. They are the only type of material acceptable for use in constructing base flashings.

9.1.4 Because of the rigidity of metal and its extreme movement with temperature changes, its use is not acceptable for base flashings. Cap flashings or counterflashings made of metal, removed from any area of possible standing water, are acceptable, provided they are properly installed in accordance with industry-accepted sheet metal details, in conjunction with an approved JM base flashing specification. Bituminous base flashings must extend at least 8" (203 mm) above the surface of the roof.

*

9.1.5 In some instances, it is necessary to provide wall coverings on the area of the wall above the base flashing. This section includes specifications for two general constructions, however, JM does not typically include these wall coverings in the guarantees offered for built-up and modified bitumen systems.

9.1.6 All health, safety, and environmental procedures involving the storage, use, and disposal of roofing materials should be followed. These precautions are outlined in the "Introduction" section of the current Johns Manville Commercial/Industrial Roofing Systems Manual.

9.2 Principles of Flashing Design

9.2.1 The following considerations should be given to all bituminous flashing systems:

A. Allow for differential movement in the flashing system, particularly when the deck and wall are not directly tied to each other (non-load-bearing construction). Differential movement between the roof deck and the wall is usually evidenced by diagonal wrinkles in the base flashing. Continued movement can cause tears in the flashing, particularly at the most restricted areas, usually in corners. If the movement cannot be handled by standard base flashing systems, roof-to-wall expansion joint details should be used to accommodate this movement. See Specifications FE-1 (NLB) and DFE-1 (NLB).

B. Locate flashed metal joints above the highest water level on the roof. Good roofing practice dictates that roof edges should be raised above the roof level, if possible. If problems do occur, the edges will be out of the area of standing water. The top edge of all base flashings must be carried a minimum of 8" (203 mm) above the roof.

C. Avoid sharp bends in built-up and modified bitumen base flashings. Right angle bends in bituminous flashings create high stress areas and can result in premature aging of the flashing material. To alleviate this condition and to provide solid backing, the use of cant strips is necessary. Cant strips are made either of perlite board, wood fiber board, wood, or other materials, and their 45° (0.79 rad.) angle face modifies the sharp angle between horizontal and vertical. They also reduce the danger of damage from foot traffic at these vulnerable areas.

D. Connect metal solidly. Sheet metal sections should be well attached. The solid securement of all flashing accessories to wood nailers is mandatory. The wood nailers must extend horizontally beyond the metal flange. Movement due to poor securement will result in abnormal stress on the membrane and flashing, which can cause leaks.

E. Secure all base flashings at the top edge with appropriate mechanical fasteners, spaced 6" (152 mm) o.c. maximum, or with some other positive means to prevent sliding or sagging.

9.3 Inspection and Preparation of the Flashing Substrate

9.3.1 All surfaces to be flashed should be inspected before any flashing work is started, since the success of the flashing system greatly depends on a properly constructed base.

9.3.2 Masonry Construction: Walls should be built with hard burned brick, sound reinforced concrete, or waterproof concrete block construction. Common faults encountered are:

1. Soft or scaling brick or concrete.
2. Poor mortar or faulty pointing of joints.
3. Broken copings and inadequate pointing of joints between copings.

Walls of ordinary hollow tile, or other materials which in themselves are not waterproof, should not be accepted as suitable to receive flashings unless they are properly waterproofed, to prevent moisture infiltration into the flashing system.

All masonry surfaces which are to receive hot bitumen or bituminous-based cement shall be primed with JM Concrete Primer. The primer must be allowed to dry thoroughly prior to application of flashing.

9.3.3 Frame Construction: Frame walls are not acceptable to receive flashing unless suitable solid backing for the flashing is provided. Walls of gypsum wall board are not acceptable as a substrate for bituminous flashings. Suitable stops should be provided at the top of the flashing in stucco construction, to ensure a watertight seal for the base flashing.

EXHIBIT 'D'

SINGLE PLY ROOF

3.10 MEMBRANE FLASHINGS

All flashings shall be installed concurrently with the roof membrane as the job progresses. No temporary flashings shall be allowed without the prior written approval of the Owner's Representative and Sarnafil. Approval shall only be for specific locations on specific dates. If any water is allowed to enter under the newly completed roofing, the affected area shall be removed and replaced at the Applicator's expense. Flashing shall be adhered to compatible, dry, smooth, and solvent-resistant surfaces. Use caution to ensure adhesive fumes are not drawn into the building.

A. Sarnacol Adhesive for Membrane Flashings

1. Over the properly installed and prepared flashing substrate, Sarnacol adhesive shall be applied according to instructions found on the Product Data Sheet. The Sarnacol adhesive shall be applied in smooth, even coats with no gaps, globs or similar inconsistencies. Only an area which can be completely covered in the same day's operations shall be flashed. The bonded sheet shall be pressed firmly in place with a hand roller.

2. No adhesive shall be applied in seam areas that are to be welded. All panels of membrane shall be applied in the same manner, overlapping the edges of the panels as required by welding techniques.

B. Install Sarnastop/Sarnabar/Sarnacord according to the Detail Drawings with approved fasteners into the structural deck at the base of parapets, walls and curbs. Sarnastop is required by Sarnafil at the base of all tapered edge strips and at transitions, peaks, and valleys according to Sarnafil's details.

C. Sarnafil's requirements and recommendations and the specifications shall be followed. All material submittals shall have been accepted by Sarnafil prior to installation.

D. All flashings shall extend a minimum of 8 inches (0.2 m) above roofing level unless otherwise accepted in writing by the Owner's Representative and Sarnafil Technical Department.

E. All flashing membranes shall be consistently adhered to substrates. All interior and exterior corners and miters shall be cut and hot-air welded into place. No bitumen shall be in contact with the Sarnafil membrane.

F. All flashing membranes shall be mechanically fastened along the counter-flashed top edge with Sarnastop at 6-8 inches (0.15-0.20 m) on center

G. Sarnafil flashings shall be terminated according to Sarnafil recommended details.

H. All flashings that exceed 30 inches (0.75 m) in height shall receive additional securement. Consult Sarnafil Technical Department for securement methods.

3.11 METAL FLASHINGS

A. Metal details, fabrication practices and installation methods shall conform to the applicable requirements of the following:

1. Factory Mutual Loss Prevention Data Sheet 1-49 (latest issue).

2. Sheet Metal and Air Conditioning Contractors National Association, Inc. (SMACNA) - latest issue.

B. Metal, other than that provided by Sarnafil, is not covered under the Sarnafil warranty.

C. Complete all metal work in conjunction with roofing and flashings so that a watertight condition exists daily.

D. Metal shall be installed to provide adequate resistance to bending to allow for normal thermal expansion and contraction.

EXHIBIT 'E'

MODIFIED BITUMEN ROOF

Notes:

1. If anchors must penetrate sheet metal, use rubber washers under fastener head.
2. All masonry surfaces must be primed with asphalt primer (ASTM D-41).
3. Smooth concrete substrate (exposed surfaces to be waterproofed)
4. Counterflashing installed in reglet per current industry recommendations.

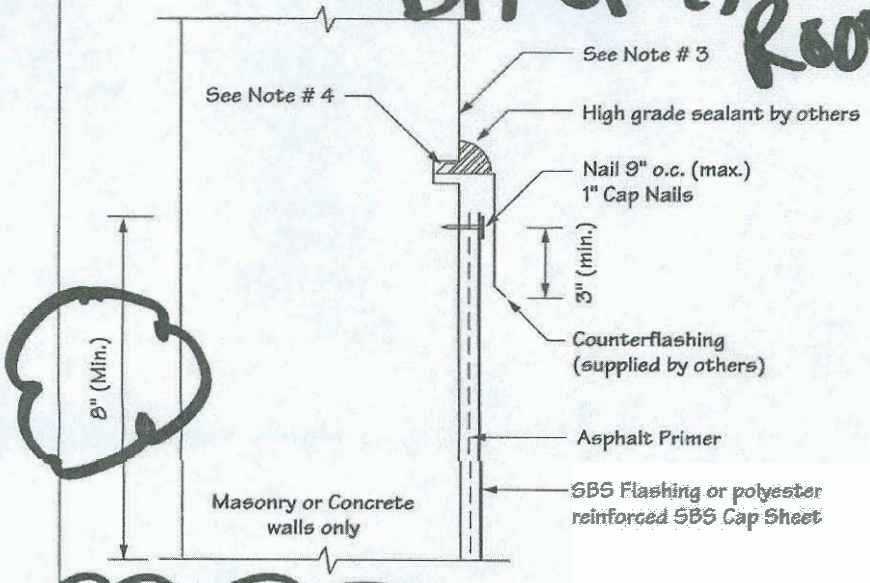

Firestone 19 Building Products 95	Modified Bitumen Reglet Counterflashing Termination	Detail No. S-T-1	Systems SBS Polyester Or Glass Reinforced

Notes:

1. Attach counterflashing 12" o.c. (max.) or as required to provide continuous compression. Seal all fastener heads with General Purpose Sealant or other high grade sealant.
2. All masonry surfaces must be primed with asphalt primer (ASTM D-41).
3. Smooth concrete substrate (exposed surfaces to be waterproofed)

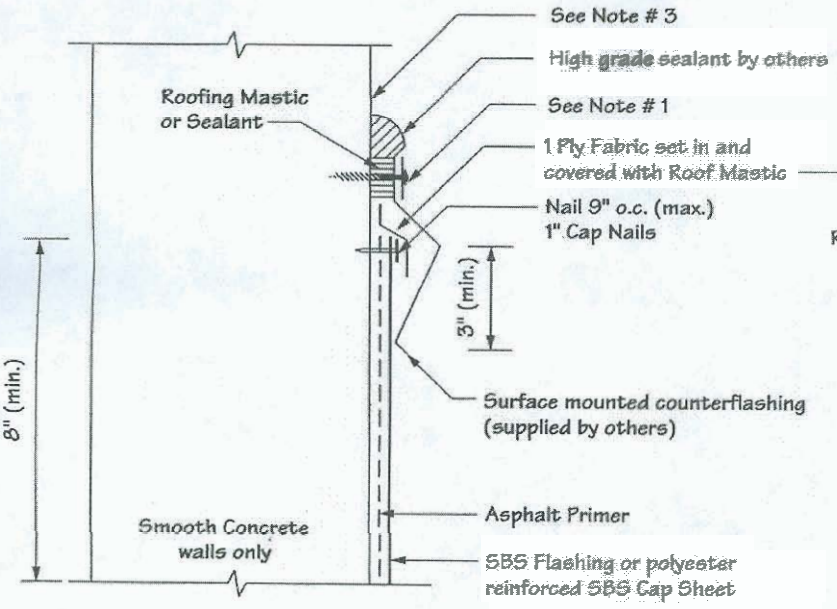

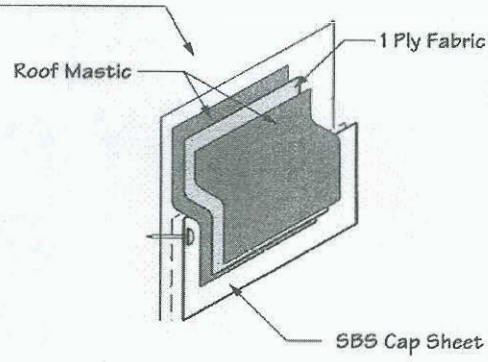

Firestone 19 Building Products 95	Modified Bitumen Surface Mounted Counterflashing Termination	Detail No. S-T-2	Systems SBS Polyester Or Glass Reinforced