Joint Appendix JA4 – 2008

Appendix JA4 – U-factor, C-factor, and Thermal Mass Data

Table of Contents

4.1 Scope and Purpose 2
4.1.1 Introduction 2
4.1.2 California Energy Commission Approved Software 2
Accounting for Continuous Insulation R-value 3
Accounting for Unusual Construction Layers 4
Double Walls 5
4.1.3 Tapered Insulation 5
4.1.4 Insulating Layers on Mass and Other Walls 5
4.1.5 Wood Based Sheathing R-values 6
4.1.6 Framing Percentages for Calculating U-factors 6
4.2 Roofs and Ceilings 7
Table 4.2.1 – U-factors of Wood Framed Attic Roofs 7
Table 4.2.3 – U-factors of Structurally Insulated Panels (SIPS) Roof/Ceilings 12
Table 4.2.4 – U-factors of Metal Framed Attic Roofs 14
Table 4.2.5 – U-factors of Metal Framed Rafter Roofs 16
Table 4.2.6 –U-factors for Span Deck and Concrete Roofs 19
Table 4.2.7 – U-factors for Metal Building Roofs 21
Table 4.2.8 – U-factors for Insulated Ceiling with Removable Panels 23
4.3 Walls 25
Table 4.3.1 – U-factors of Wood Framed Walls 25
Table 4.3.2 – U-factors of Structurally Insulated Wall Panels (SIPS) 27
Table 4.3.3 – U-factors of Metal Framed Walls for Nonresidential Construction 29
Table 4.3.4 – U-factors of Metal Framed Walls for Residential Construction 31
Table 4.3.5 – Properties of Hollow Unit Masonry Walls 33
Table 4.3.6 – Properties of Solid Unit Masonry and Solid Concrete Walls 35
Table 4.3.7 – Properties of Concrete Sandwich Panels 37
Table 4.3.9 – U-factors for Metal Building Walls 42
Table 4.3.10 – U-factors for Insulated Metal Panel Walls 44
Table 4.3.11 – Thermal Properties of Log Home Walls 45
Table 4.3.12 – Thermal and Mass Properties of Straw Bale Walls 46
Table 4.3.13 – Effective R-values for Interior or Exterior Insulation Layers 47
4.4 Floors and Slabs 49
Table 4.4.1 – Standard U-factors for Wood-Framed Floors with a Crawl Space 49
Table 4.4.2 – Standard U-factors for Wood Framed Floors without a Crawl Space 51
Table 4.4.3 – Standard U-factors for Wood Foam Panel (SIP) Floors 53
Table 4.4.4 – Standard U-factors for Metal-Framed Floors with a Crawl Space 55
Table 4.4.5 – Standard U-factors for Metal-Framed Floors without a Crawl Space 57
Table 4.4.6 – Standard U-factors for Concrete Raised Floors 59
Table 4.4.7 – F-Factors for Unheated Slab-on-Grade Floors 60
Table 4.4.8 – F-Factors for Heated Slab-on-Grade Floors 61
4.5 Miscellaneous Construction 62
Table 4.5.1 – Opaque Doors 62
4.6 Modeling Constructions in the Nonresidential ACM 63
4.6.1 DOE-2 Material Codes 63
4.6.2 Framing/Insulation Layer 63

4.6.3 Thermal Mass Properties 63
4.6.4 Metal Buildings 63
4.6.5 Slabs 63
Table 4.6.2 – Rules for Calculating Mass Thermal Properties From Published Values 65

4.1 Scope and Purpose

4.1.1 Introduction

The values in this appendix must be used for all residential and nonresidential compliance calculations: prescriptive, overall envelope, and whole building performance. CEC Approved compliance software may make adjustments to the values in these tables using procedures described in this appendix.

The data tables are organized first by roofs, walls, and floors. For each, the data is further organized by construction type, beginning with wood framed construction, followed by metal framed construction, concrete and special construction assemblies. Each table features a letter/number coordinate system (shaded in gray) that can be used as an identifier for each value, i.e. 4.2-A10 indicates Table 4.2, Column A, Row 10. Construction assembly descriptions shall be concatenated first by row and then by column. For example, the descriptions of 4.1-A17 and 4.9-H3 and shall be as follows (abbreviations are acceptable):

Wood Framed Attic, Trusses@24 inch. OC, R-30 attic insulation, No continuous insulation
Wood Framed Wall, Wd 2x4 @16 inch OC, R-13 cavity insulation, R-14 continuous insulation

If a construction assembly is not adequately represented in the tables below, the permit applicant or the manufacturer of the product may request approval from the California Energy Commission. The California Energy Commission Executive Director will grant such approval, after reviewing submittals from the applicant. New constructions that are approved by the Executive Director will be published as an addendum to this appendix for use by all compliance authors. Addenda may consist of new tables or additional rows or columns to existing tables.

4.1.2 California Energy Commission Approved Software

California Energy Commission approved software used for performance or prescriptive calculations may make adjustments to the data contained in this appendix to account for the special circumstances of particular constructions. This section defines the rules for making these adjustments. These adjustments may not be made when the tables are used manually. Software may have input screens where the user may choose a construction by entering the cavity insulation (or insulation penetrated by framing); the continuous insulation; and other factors such as framing spacing. To the software user, the process of using these tables may look very much like a traditional U-factor calculation.

Accounting for Continuous Insulation R-value

Many of the tables in this appendix have columns for varying levels of continuous insulation. Continuous insulation is insulation that is uninterrupted by framing and provides a continuous insulating layer. Limits on the position of the continuous insulation and other factors are specified in each table. When data from a table is used manually, the R-value of the continuous insulation in the proposed construction shall be equal to or greater than the R-value shown in the column heading; no interpolation is permitted. California Energy Commission approved software used for performance or prescriptive calculations may account for any amount of continuous insulation using Equation 4-1. This adjustment may not be used, however, for continuous insulation with thermal resistance less than R-2.

$$U_{With.Cont.Insul} = \frac{1}{\frac{1}{U_{Col.A}} + R_{Cont.Insul}} \qquad \text{Equation 4-1}$$

where

$U_{With.Cont.Insul}$ Calculated U-factor of the construction assembly with a specific R-value of continuous insulation.

$U_{Col.A}$ A U-factor selected from column A.

$R_{Cont.Insul}$ The R-value of continuous insulation.

If insulation layers are added that are interrupted by furring strips, then the effective R-values from Table 4. 3.13 shall be used in Equation 4-1.

Accounting for Unusual Construction Layers

The assumptions that are the basis of the U-factors published in this appendix are documented in the paragraphs following each table. CEC approved software used for prescriptive or performance calculations may be used to make adjustments to these assumptions based on data entered by the software user. Adjustments may only be made, however, when the total R-value of the proposed construction is at least an R-2 greater than the documented assumption. Each table includes the assumptions used to determine the U-factors.

Equation 4-2 shall be used to make these adjustments.

$$U_{Proposed} = \frac{1}{\frac{1}{U_{With.Cont.Insul}} + \Delta R_{Assumed}} \qquad \text{Equation 4-2}$$

where

$U_{Proposed}$ Calculated U-factor of the proposed construction assembly.

$U_{With.Cont.Insul}$ The U-factor adjusted for continuous insulation using Equation 4-1.

$\Delta R_{Assumed}$ The difference in R-value between what was assumed in the table and the proposed construction for a continuous layer.

There are limits, however, on the types of adjustments that can be made.

- The difference in resistance shall be at least R-2. When calculating the difference in R-value, no changes in assumptions shall be made to the framing/insulation layer; the proposed construction shall assume the same values as the table.
- The thermal resistance of air layers shall be taken from the 2005 ASHRAE Handbook of Fundamentals, for a mean temperature of 50°F, a temperature difference of 20 °F and an effective emittance of 0.82.
- R-values for air layers for roof and ceiling assemblies shall be based on heat flow up. R-values for air layers for floor assemblies shall be based on heat flow down. R-values for other assemblies shall be based on horizontal heat flow. Air layers must be sealed on edges to prevent air layer mixing with ambient air.
- One additional air gap may be credited, but not air gaps that are within the framing insulation cavity layer; these are already accounted for in the published data. Air gaps of less than 0.5 inch thickness shall be considered to have an R-value of zero. An example of an acceptable additional air gap would be the space between a brick veneer and the sheathing on the framed wall.

Double Walls

The U-factor of double walls or other double assemblies may be determined by combining the U-factors from the individual construction assemblies that make up the double wall. The following equation shall be used.

$$U_{Combined} = \frac{1}{\frac{1}{U_1} + \frac{1}{U_2}}$$ Equation 4-3

4.1.3 Tapered Insulation

If continuous roof insulation is tapered for drainage or other purposes, then the user may determine the overall U-factor in one of two ways:

- To determine the U-factor for the roof at the location where the insulation is at a minimum and where it is at a maximum. Take the average of these two U-factors. With the R-value compliance approach (prescriptive method only), calculate the R-value as the inverse of the average U-factor as determined above. R-values may not be averaged. Divide the roof into sub-areas for each one-inch increment of insulation and determine the U-factor of each sub-area. This approach may only be used with the performance method, and in this case, each sub area shall be modeled as a separate surface.

When roofs have a drain located near the center and when tapered insulation creates a slope to the drain, the surface area at the maximum insulation thickness will be significantly greater than the surface area at the minimum thickness, so the second method will give a more accurate result. The first method yields a conservative estimate for roofs with central drains.

4.1.4 Insulating Layers on Mass and Other Walls

The data in Table 4.3.13 may be used to modify the U-factors and C-factors from Table 4.3.5, Table 4.3.6, and Table 4.3.7 when an additional layer is added to the inside or outside of the mass wall. For exterior insulation finish systems (EIFS) or other insulation only systems, values should be selected from row 26 of Table 4.19 In these cases, the R-value of the layer is equal to the R-value of the insulation. The other choices from this table represent systems typically placed on the inside of mass walls. The following equations calculate the total U-factor or C-factor, where U_{mass} and C_{mass} are selected from Table 4.3.5, Table 4.3.6, or Table 4.3.7 and $R_{Outside}$ and R_{Inside} are selected from Table 4.3.13. $R_{outside}$ is selected from row 26 while R_{inside} is selected from rows 1 through 25.

$$U_{Total} = \frac{1}{R_{Outside} + \frac{1}{U_{Mass}} + R_{Inside}}$$ Equation 4-4

$$C_{Total} = \frac{1}{R_{Outside} + \frac{1}{C_{Mass}} + R_{Inside}}$$ Equation 4-5

The values from Table 4.3.13 may be used to modify the U-factors of other construction assemblies as well, when non-homogeneous layers are added (see Equation 4-1).

4.1.5 Wood Based Sheathing R-values

For the purpose of calculations for the Joint Appendices plywood, particle board, oriented strand board (OSB) and similar sheathing materials will all be considered Wood Based Sheathing. A single R-value will be used for each thickness listed regardless of the material. This approach simplifies calculations yet has little effect on the overall R-value of assemblies since the differences in sheathing R-value are minimal compared to the overall assembly.

R-values for Wood Based Sheathing

Thickness	R-value (ft^2-hr ^oF/Btu)
3/8 inch	0.36
1/2 inch	0.48
5/8 inch	0.60
3/4 inch	0.72
1 inch	0.96
1 1/4 inch	1.20

4.1.6 Framing Percentages for Calculating U-factors

Table 4.1.1 – Framing Percentages

Assembly Type	Framing Spacing	Framing Percentage
Walls	16"o.c.	25 %
	24"o.c.	22 %
	48"o.c.	4 %
Walls Metal	16"o.c.	15%
	24"o.c.	12%
Floors	16"o.c.	10 %
	24"o.c.	7 %
Roofs	16"o.c.	10 %
	24"o.c.	7 %
	48"o.c.	4 %

4.2 Roofs and Ceilings

Table 4.2.1 – U-factors of Wood Framed Attic Roofs

Truss Spacing	R-value of Attic Insulation		Rated R-value of Continuous Insulation[1]							
			None	R-2	R-4	R-6	R-7	R-8	R-10	R-14
			A	B	C	D	E	F	G	H
16 in. OC	None	1	0.300	0.187	0.136	0.107	0.097	0.088	0.075	0.058
	R-11	2	0.079	0.068	0.060	0.053	0.051	0.048	0.044	0.037
	R-13	3	0.071	0.062	0.055	0.050	0.047	0.045	0.041	0.036
	R-19	4	0.049	0.045	0.041	0.038	0.037	0.035	0.033	0.029
	R-21	5	0.042	0.039	0.036	0.034	0.032	0.031	0.030	0.026
	R-22	6	0.043	0.039	0.037	0.034	0.033	0.032	0.030	0.027
	R-25	7	0.038	0.035	0.033	0.031	0.030	0.029	0.028	0.025
	R-30	8	0.032	0.030	0.028	0.027	0.026	0.025	0.024	0.022
	R-38	9	0.026	0.024	0.023	0.022	0.022	0.021	0.020	0.019
	R-44	10	0.021	0.020	0.019	0.019	0.018	0.018	0.017	0.016
	R-49	11	0.020	0.019	0.019	0.018	0.018	0.017	0.017	0.016
	R-60	12	0.017	0.016	0.016	0.015	0.015	0.015	0.014	0.013
24 in. OC	None	13	0.305	0.189	0.137	0.108	0.097	0.089	0.075	0.058
	R-11	14	0.076	0.066	0.058	0.052	0.050	0.047	0.043	0.037
	R-13	15	0.068	0.060	0.054	0.048	0.046	0.044	0.041	0.035
	R-19	16	0.048	0.043	0.040	0.037	0.036	0.034	0.032	0.029
	R-21	17	0.043	0.040	0.037	0.034	0.033	0.032	0.030	0.027
	R-22	18	0.041	0.038	0.036	0.033	0.032	0.031	0.029	0.026
	R-25	19	0.037	0.034	0.032	0.030	0.029	0.028	0.027	0.024
	R-30	20	0.031	0.029	0.028	0.026	0.025	0.025	0.024	0.022
	R-38	21	0.025	0.024	0.023	0.022	0.021	0.021	0.020	0.018
	R-44	22	0.021	0.020	0.019	0.019	0.018	0.018	0.017	0.016
	R-49	23	0.019	0.019	0.018	0.017	0.017	0.017	0.016	0.015
	R-60	24	0.016	0.016	0.015	0.015	0.014	0.014	0.014	0.013

Notes:

1. Continuous insulation shall be located at the ceiling, below the bottom chord of the truss and be uninterrupted by framing.

2. In climate zones 1 and 16 the insulating R-value of continuous insulation materials installed above the roofs waterproof membrane shall be multiplied by 0.8 before choosing the table column for determining assembly U-factor.

This table contains thermal performance data (U-factors) for wood framed attics where the ceiling provides the air barrier and the attic is ventilated. Wood trusses are the most common construction for low-rise residential buildings and for Type V nonresidential buildings. While the sketch shows a truss system with a flat ceiling, the data in this table may be used for scissor trusses and other non-flat trusses. If the bottom chord is not flat, then the slope should not exceed 3:12 for nonadhesive binder blown insulation. This table may also be used with composite trusses that have a wood top and bottom chord and metal struts connecting them.

For the majority of cases, values will be selected from column A of this table. Column A shall be used for the common situation where either batt or blown insulation is placed directly over the ceiling (and tapered at the edges). Builders or designers may increase thermal performance by adding a continuous insulation layer at the ceiling. The continuous insulation is typically a rigid polystyrene or polyisocyanurate foam insulation. Continuous insulation does not include the blown or batt insulation that is over the bottom chord of the truss (this is already accounted for in the U-factors published in Column A).

When this table is used manually, the R-value of continuous insulation shall be equal to or greater than the R-value published in the continuous insulation columns. For instance if the insulation is R-3, the R-2 columnshall be used. No interpolation is permitted when data from the table is selected manually. CEC approved compliance software, including those used for prescriptive compliance, may accurately account for any amount of continuous insulation or for unusual construction assemblies using Equation 4-1 and Equation 4-2.

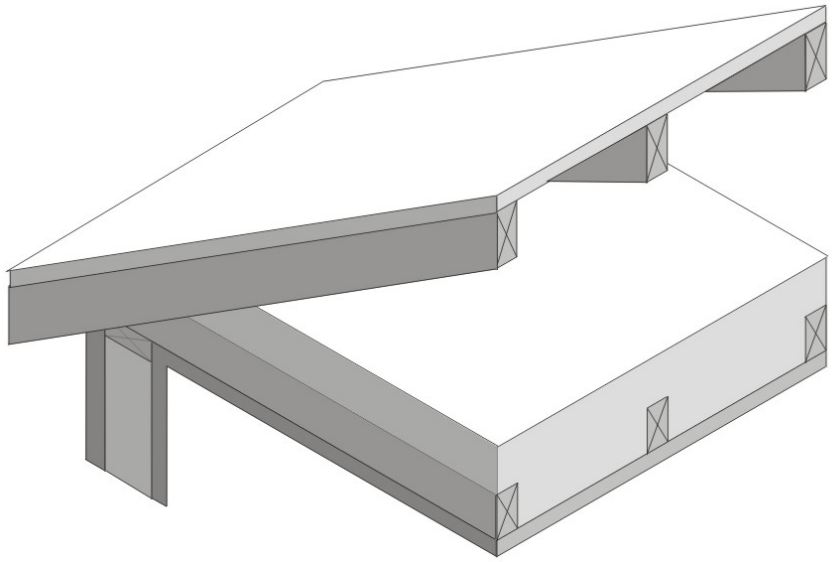

Figure 4.2.1 – Wood Framed Attic Roofs

This table shall not be used for cases where insulation is located at the roof of the attic. There are two situations where this may be done. Foamed plastic may be sprayed onto the top chord of the trusses and onto the bottom of the upper structural deck (roof). The foam expands and cures to provide an airtight barrier and continuous insulation. Another case is where a plastic membrane or netting is installed above the ceiling, (hanging below the roof deck) and either batt or blown insulation is installed over the netting. In both of these cases, the attic is sealed (not ventilated). There are a number of issues related to these insulation techniques and special CEC approval is required.

Assumptions: These data are calculated using the parallel path method documented in the 2005 ASHRAE Handbook of Fundamentals. These calculations assume an exterior air film of R-0.17, asphalt shingles of R-0.44 (AR02), building paper of R-0.06 (BP01), ½ inch of wood based sheathing (Custom), an attic air space (greater than 3.5 inch) with a R-0.80, the insulation / framing layer, continuous insulation (if any) 1/2 inch gypsum board (GP01) of R-0.45, and an interior air film (heat flow up) of R-0.61. Wood 2x4 framing is assumed at the ceiling level. R-13 of attic insulation is assumed between the framing members; above that level, attic insulation is uninterrupted by framing. The framing percentage is assumed to be 10 percent for 16 inch oncenter and 7 percent for 24 inch oncenter. 7.25 percent of the attic insulation above the framing members is assumed to be at half depth, due to decreased depth of insulation at the eaves.

Table 4.2.2 – U-factors of Wood Framed Rafter Roofs

Rafter Spacing	R-value of Cavity Insulation	Nominal Framing Size		Rated R-value of Continuous Insulation[6]							
				None	R-2	R-4	R-6	R-7	R-8	R-10	R-14
				A	B	C	D	E	F	G	H
16 in. OC	None	Any	**1**	0.297	0.186	0.136	0.107	0.096	0.088	0.075	0.058
	R-11[2]	2x4	**2**	0.084	0.072	0.063	0.056	0.053	0.050	0.046	0.039
	R-13[2]	2x4	**3**	0.075	0.065	0.058	0.052	0.049	0.047	0.043	0.037
	R-15[2]	2x4	**4**	0.068	0.060	0.053	0.048	0.046	0.044	0.040	0.035
	R-19[2]	2x4	**5**	0.075	0.065	0.058	0.052	0.049	0.047	0.043	0.037
	R-19[2,3]	2x4	**6**	0.062	0.055	0.050	0.045	0.043	0.041	0.038	0.033
	R-11	2x6	**7**	0.076	0.066	0.058	0.052	0.050	0.047	0.043	0.037
	R-13	2x6	**8**	0.069	0.061	0.054	0.049	0.047	0.044	0.041	0.035
	R-15	2x6	**9**	0.062	0.055	0.050	0.045	0.043	0.041	0.038	0.033
	R-19[2]	2x6	**10**	0.056	0.050	0.046	0.042	0.040	0.039	0.036	0.031
	R-21[2]	2x6	**11**	0.052	0.047	0.043	0.040	0.038	0.037	0.034	0.030
	R-19[2]	2x8	**12**	0.051	0.046	0.042	0.039	0.038	0.036	0.034	0.030
	R-21	2x8	**13**	0.048	0.044	0.040	0.037	0.036	0.035	0.032	0.029
	R-22	2x10	**14**	0.044	0.040	0.037	0.035	0.034	0.033	0.031	0.027
	R-25	2x10	**15**	0.041	0.038	0.035	0.033	0.032	0.031	0.029	0.026
	R-30[4]	2x10	**16**	0.036	0.034	0.031	0.030	0.029	0.028	0.026	0.024
	R-30	2x12	**17**	0.035	0.033	0.031	0.029	0.028	0.027	0.026	0.023
	R-38[4]	2x12	**18**	0.029	0.027	0.026	0.025	0.024	0.024	0.022	0.021
	R-38[4]	2x14	**19**	0.028	0.027	0.025	0.024	0.023	0.023	0.022	0.020
	Sprayed Foam or Cellulose Insulation[2,5]	2x4	**20**	0.074	0.064	0.057	0.051	0.049	0.046	0.043	0.036
		2x6	**21**	0.052	0.047	0.043	0.040	0.038	0.037	0.034	0.030
		2x8	**22**	0.041	0.038	0.035	0.033	0.032	0.031	0.029	0.026
		2x10	**23**	0.033	0.031	0.029	0.028	0.027	0.026	0.025	0.023
		2x12	**24**	0.028	0.027	0.025	0.024	0.023	0.023	0.022	0.020
24 in. OC	None	Any	**25**	0.237	0.161	0.122	0.098	0.089	0.082	0.070	0.055
	R-11[2]	2x4	**26**	0.081	0.070	0.061	0.055	0.052	0.049	0.045	0.038
	R-13[2]	2x4	**27**	0.072	0.063	0.056	0.050	0.048	0.046	0.042	0.036
	R-15[2]	2x4	**28**	0.065	0.058	0.052	0.047	0.045	0.043	0.039	0.034
	R-19[2]	2x4	**29**	0.072	0.063	0.056	0.050	0.048	0.046	0.042	0.036
	R-19[2,3]	2x4	**30**	0.059	0.053	0.048	0.044	0.042	0.040	0.037	0.032
	R-11	2x6	**31**	0.075	0.065	0.058	0.052	0.049	0.047	0.043	0.037
	R-13	2x6	**32**	0.067	0.059	0.053	0.048	0.046	0.044	0.040	0.035
	R-15[2]	2x6	**33**	0.060	0.054	0.048	0.044	0.042	0.041	0.038	0.033
	R-19[2]	2x6	**34**	0.054	0.049	0.044	0.041	0.039	0.038	0.035	0.031
	R-21[2]	2x6	**35**	0.049	0.045	0.041	0.038	0.036	0.035	0.033	0.029
	R-19[2]	2x8	**36**	0.049	0.045	0.041	0.038	0.036	0.035	0.033	0.029
	R-21	2x8	**37**	0.046	0.042	0.039	0.036	0.035	0.034	0.032	0.028
	R-22	2x10	**38**	0.043	0.040	0.037	0.034	0.033	0.032	0.030	0.027
	R-25	2x10	**39**	0.039	0.036	0.034	0.032	0.031	0.030	0.028	0.025
	R-30[4]	2x10	**40**	0.034	0.032	0.030	0.028	0.027	0.027	0.025	0.023

R-30	2x12	**41**	0.033	0.031	0.029	0.028	0.027	0.026	0.025	0.023
R-38 [4]	2x12	**42**	0.028	0.027	0.025	0.024	0.023	0.023	0.022	0.020
R-38[4]	2x14	**43**	0.027	0.026	0.024	0.023	0.023	0.022	0.021	0.020
Sprayed Foam or Cellulose Insulation[2,5]	2x4	**44**	0.071	0.062	0.055	0.050	0.047	0.045	0.042	0.036
	2x6	**45**	0.050	0.045	0.042	0.038	0.037	0.036	0.033	0.029
	2x8	**46**	0.039	0.036	0.034	0.032	0.031	0.030	0.028	0.025
	2x10	**47**	0.032	0.030	0.028	0.027	0.026	0.025	0.024	0.022
	2x12	**48**	0.026	0.025	0.024	0.022	0.022	0.022	0.021	0.019

Notes:

1. Rigid foam board used for cavity insulation must fill the entie cavity between the rafters and be sealed properly to prevent air gaps, and must be secured properly to prevent any future discrepancies in the construction assembly.

2. This assembly is only allowed where building officials approve rafter attic assemblies with no ventilation air spaces.

3. This assembly requires insulation with an R-value per inch 5.6 or larger (k-factor 1.8 or less). This is board type insulation, mostly Isocyanurate. Medium density spray polyurethane foam may also be used to meet this requirement if the quality installation procedures and documentation in Section 4.7 of Joint Appendix 4 are followed, Documentation from Directory of Certified insulation materials must be provided to show compliance with this assembly.

4. Higher density fiberglass batt is needed to achieve the indicated U-factor. R-30 must be achieved with less than 8.25 inch full thickness. R-38 must be achieved with less than 10.25 inch thickness (R-30c, R-38c).

5. Foamed plastic or cellulose insulation shall fill the entire cavity. Cellulose shall have a binder to prevent sagging. Verify that the building official in your area permits this construction, since there is no ventilation layer.

6. Continuous insulation shall be located at the ceiling or at the roof and be uninterrupted by framing . In climate zones 1 and 16 the insulating R-value of continuous insulation materials installed above the roofs waterproof membrane shall be multiplied by 0.8 before choosing the table column for determining assembly U-factor.

This table contains thermal performance data (U-factors) for wood framed rafter roofs. This is a common construction in low-rise residential buildings and in Type V nonresidential buildings. The rafters may be either flat or in a sloped application. Insulation is typically installed between the rafters. With this construction, the insulation is in contact with the ceiling and there is typically a one-inch air gap above the insulation so that moisture can be vented. Whether there is a space above the insulation depends on local climate conditions and may not be required in some building permit jurisdictions. The ventilation space requirement would have to be waived by the building official for the case of cellulose insulation or foamed plastic, since the entire cavity would be filled.

For the majority of cases, U-factors will be selected from Column A of this table; this case covers insulation placed only in the cavity. When continuous insulation is installed either at the ceiling or at the roof, then U-factors from other columns may be selected. The continuous insulation is typically a rigid polystyrene or polyisocyanurate foam insulation, but can also include mineral wool or other suitable materials.

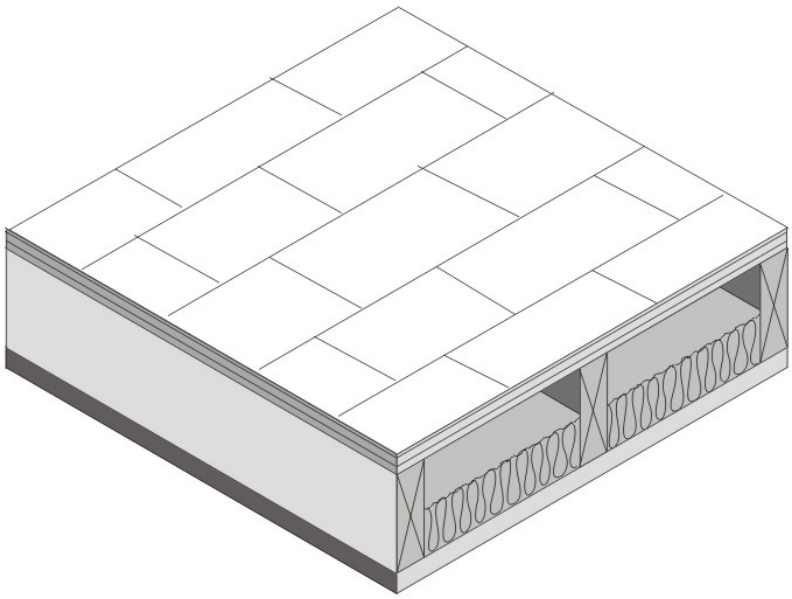

Figure4.2.2 – Wood Frame Rafter Roof

When this table is used manually, the R-value of continuous insulation shall be equal to or greater than the R-value published in the continuous insulation columns. For instance if the continuous insulation is R-3, the R-2 column shall be used. No interpolation is permitted when data from the table is used manually. CEC approved software, however, may determine the U-factor for any amount of continuous insulation and/or for layers using Equation 4-1 and Equation 4-2.

Assumptions: These data are calculated using the parallel path method documented in the 2005 ASHRAE Handbook of Fundamentals. These calculations assume an exterior air film of R-0.17, asphalt shingles of R-0.44 (AR02), building paper of R-0.06 (BP01), ½ inch of wood based sheathing (Custom), continuous insulation (optional), the insulation / framing layer with an air space of R-0.76 or R-0.80 (except for cellulose and foamed plastic), 1/2 inch gypsum of R-0.45 (GP01), and an interior air film (heat flow up diagonally) of R-0.62. The continuous insulation may also be located at the ceiling, between the drywall and the framing. The framing percentage is assumed to be 10 percent for 16 inch OC and 7 percent for 24 inch. OC. The thickness of framing members is assumed to be the actual size of 3.50, 5.50, 7.25, 9.25, and 11.25 in. for 2x4, 2x6, 2x8, 2x10, and 2x12 nominal sizes. High-density batt insulation is assumed to be 8.5 inch thick for R-30 and 10.5 inch thick for R-38. The R-value of sprayed foam and cellulose insulation is assumed to be R-3.6 per inch.

Table 4.2.3 – U-factors of Structurally Insulated Panels (SIPS) Roof/Ceilings

System	Insulation R-value	Framing or Spline Spacing		R-value of Additional Layer of Continuous Insulation[2]							
				None	R-2	R-4	R-6	R-7	R-8	R-10	R-14
				A	B	C	D	E	F	G	H
Wood Framing	R-14[1]	48 in. o.c.	**1**	0.063	0.056	0.050	0.046	0.044	0.042	0.039	0.033
	R-22	48 in. o.c.	**2**	0.043	0.040	0.037	0.034	0.033	0.032	0.030	0.027
	R-28	48 in. o.c.	**3**	0.035	0.033	0.031	0.029	0.028	0.027	0.026	0.023
	R-36	48 in. o.c.	**4**	0.028	0.027	0.025	0.024	0.023	0.023	0.022	0.020
	R-22	96 in o.c.	**5**	0.042	0.039	0.036	0.034	0.032	0.031	0.030	0.026
	R-28	96 in o.c.	**6**	0.034	0.032	0.030	0.028	0.027	0.027	0.025	0.023
	R-36	96 in o.c.	**7**	0.027	0.026	0.024	0.023	0.023	0.022	0.021	0.020
Steel Framing	R-14[1]	48 in. o.c.	**8**	0.075	0.065	0.058	0.052	0.049	0.047	0.043	0.037
	R-22	48 in. o.c.	**9**	0.057	0.051	0.046	0.042	0.041	0.039	0.036	0.032
	R-28	48 in. o.c.	**10**	0.047	0.043	0.040	0.037	0.035	0.034	0.032	0.028
	R-36	48 in. o.c.	**11**	0.043	0.040	0.037	0.034	0.033	0.032	0.030	0.027
OSB Spline	R-22	48 in. o.c.	**12**	0.041	0.038	0.035	0.033	0.032	0.031	0.029	0.026
	R-28	48 in. o.c.	**13**	0.033	0.031	0.029	0.028	0.027	0.026	0.025	0.023
	R-36	48 in. o.c.	**14**	0.026	0.025	0.024	0.022	0.022	0.022	0.021	0.019
	R-22	96 in o.c.	**15**	0.041	0.038	0.035	0.033	0.032	0.031	0.029	0.026
	R-28	96 in o.c.	**16**	0.033	0.031	0.029	0.028	0.027	0.026	0.025	0.023
	R-36	96 in o.c.	**17**	0.026	0.025	0.024	0.022	0.022	0.022	0.021	0.019

Notes:

1. The insulation R-value must be at least R-14 in order to use this table.

2 For credit, continuous insulation shall be at least R-2 and may be installed on either the interior or the exterior of the wall assembly.

3. In climate zones 1 and 16 the insulating R-value of continuous insulation materials installed above the roofs waterproof membrane shall be multiplied by 0.8 before choosing the table column for determining assembly U-factor.

This table gives U-factors for structurally insulated panels used in ceiling and roof constructions. This is a construction system that consists of rigid foam insulation sandwiched between two layers of plywood or oriented strand board (OSB). Data is provided for three variations of this system. The system labeled “Wood Framing” uses wood spacers to separate the plywood or OSB boards and provide a means to connect the panels with mechanical fasteners. The system labeled “Steel Framing” uses steel framing members and mechanical fasteners at the joints. The system labeled “OSB Spline” uses splines to connect the panels so that framing members do not penetrate the insulation.

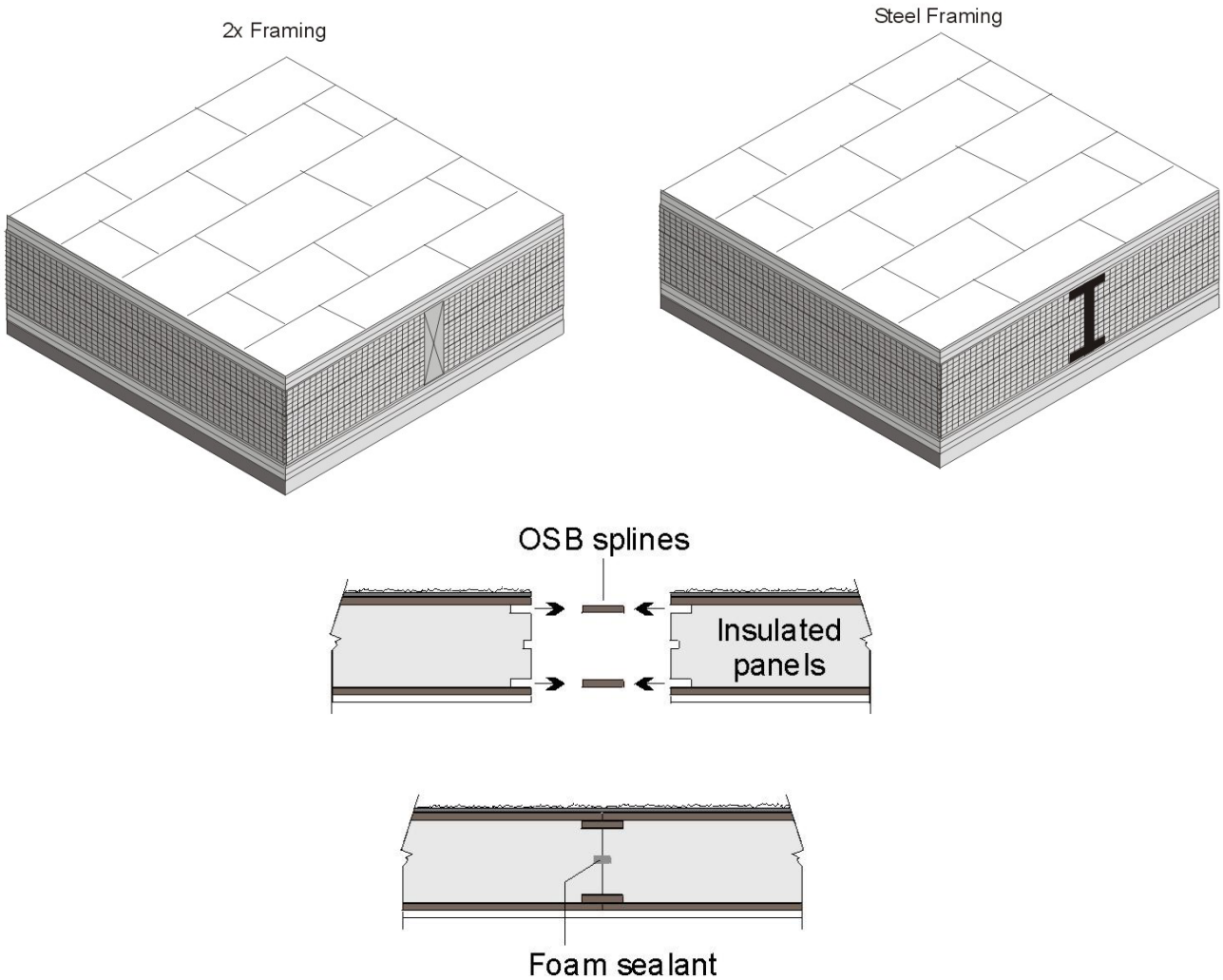

Figure 4.2.3 – SIPS Roof/Ceiling

Data from Column A will be used in most cases, since it is quite unusual to add continuous insulation to a panel that is basically all insulation anyway. If insulation is added, however, then the U-factor is selected from one of the other columns. If the tables are used manually, then the installed insulation shall have a thermal resistance at least as great as the column selected. When the table is used with CEC approved compliance software, then the R-value of any amount of continuous insulation may be accounted for along with the thermal resistance of special construction layers may be accounted for using Equation 4-1 and Equation 4-2.

Assumptions: The wood framing and OSB spline data are calculated using the parallel path method documented in the 2005 ASHRAE Handbook of Fundamentals. Assemblies with metal framing are calculated using the ASHRAE Zone Calculation Method which is also documented in the 2005 ASHRAE Handbook of Fundamentals. These calculations assume an exterior air film of R-0.17, asphalt shingles of R-0.44 (AR02), building paper of R-0.06 (BP01), 7/16 inch of OSB of R-0.69, the rigid insulation of R-3.85 per inch, another layer of 7/16 inch of OSB, ½ inch gypsum board of R-0.45 (GP01), an R-value of 0.99 per inch is assumed for the wood frame and an interior air film (heat flow up diagonally) of R-0.62. If an additional layer of insulation is used, this may be installed on either the interior or exterior of the SIPS panel assembly.

Table 4.2.4 – U-factors of Metal Framed Attic Roofs

				Rated R-value of Continuous Insulation[1]							
				R-0	R-2	R-4	R-6	R-7	R-8	R-10	R-14
Spacing	**Nominal Framing Size**	**Cavity Insulation R-Value:**		**A**	**B**	**C**	**D**	**E**	**F**	**G**	**H**
16 in. OC	Any	None	**1**	0.328	0.198	0.142	0.111	0.100	0.091	0.077	0.059
	2 x 4	R-11	**2**	0.126	0.101	0.084	0.072	0.067	0.063	0.056	0.046
	(3.65 in.)	R-13	**3**	0.121	0.097	0.082	0.070	0.066	0.061	0.055	0.045
		R-19	**4**	0.071	0.062	0.055	0.050	0.047	0.045	0.042	0.036
		R-21	**5**	0.063	0.056	0.050	0046	0.044	0.042	0.039	0.033
		R-22	**6**	0.059	0.053	0.048	0.044	0.042	0.040	0.037	0.032
		R-25	**7**	0.051	0.046	0.042	0.039	0.038	0.036	0.034	0.030
		R-30	**8**	0.041	0.038	0.035	0.033	0.032	0.031	0.029	0.026
		R-38	**9**	0.031	0.029	0.028	0.026	0.025	0.025	0.024	0.022
		R-44	**10**	0.027	0.026	0.024	0.023	0.023	0.022	0.021	0.020
		R-49	**11**	0.024	0.023	0.022	0.021	0.021	0.020	0.019	0.018
		R-60	**12**	0.019	0.018	0.018	0.017	0.017	0.016	0.016	0.015
24 in. OC	Any	None	**13**	0.324	0.197	0.141	0.110	0.099	0.090	0.076	0.059
	2 x 4	R-11	**14**	0.109	0.089	0.076	0.066	0.062	0.058	0.052	0.043
	(3.65 in.)	R-13	**15**	0.103	0.085	0.073	0.064	0.060	0.056	0.051	0.042
		R-19	**16**	0.065	0.058	0.052	0.047	0.045	0.043	0.039	0.034
		R-21	**17**	0.058	0.052	0.047	0.043	0.041	0.040	0.037	0.032
		R-22	**18**	0.055	0.050	0.045	0.041	0.040	0.038	0.035	0.031
		R-25	**19**	0.047	0.043	0.040	0.037	0.035	0.034	0.032	0.028
		R-30	**20**	0.039	0.036	0.034	0.032	0.031	0.030	0.028	0.025
		R-38	**21**	0.030	0.028	0.027	0.025	0.025	0.024	0.023	0.021
		R-44	**22**	0.026	0.025	0.024	0.022	0.022	0.022	0.021	0.019
		R-49	**23**	0.023	0.022	0.021	0.020	0.020	0.019	0.019	0.017
		R-60	**24**	0.019	0.018	0.018	0.017	0.017	0.016	0.016	0.015

Notes:

1 Continuous insulation shall be located at the ceiling or at the roof and be uninterrupted by framing.

2. In climate zones 1 and 16 the insulating R-value of continuous insulation materials installed above the roofs waterproof membrane shall be multiplied by 0.8 before choosing the table column for determining assembly U-factor.

This table contains U-factors for metal-framed attic roofs, where the ceiling is the air barrier and the attic is ventilated. This construction assembly is similar to those that are covered by Table 4.2.1, except that metal framing members are substituted for the wood-framing members. The top chord of the truss is typically sloped, while the bottom chord is typically flat. Data from this table may be used for cases where the bottom chord of the truss is sloped. If the bottom chord slopes more than 3:12, nonadhesive binder blown insulation must not be used.

For the majority of cases, values will be selected from column A of this table. Column A applies for the common situation where either batt or blown insulation is placed directly over the ceiling. Builders or designers may increase thermal performance by adding a continuous insulation layer at the ceiling. The continuous insulation is typically a rigid polystyrene or polyisocyurnate foam insulation. Continuous insulation does not include the blown or batt insulation that is over the bottom chord of the truss (this is already accounted for in the first column data).

When this table is used manually, the R-value of continuous insulation shall be equal to or greater than the R-value published in the continuous insulation columns. No interpolation is permitted when data from the table is used manually. CEC approved software, however, may determine the U-factor for any amount of continuous insulation and for unusual construction layers using Equation 4-1 and Equation 4-2.

.

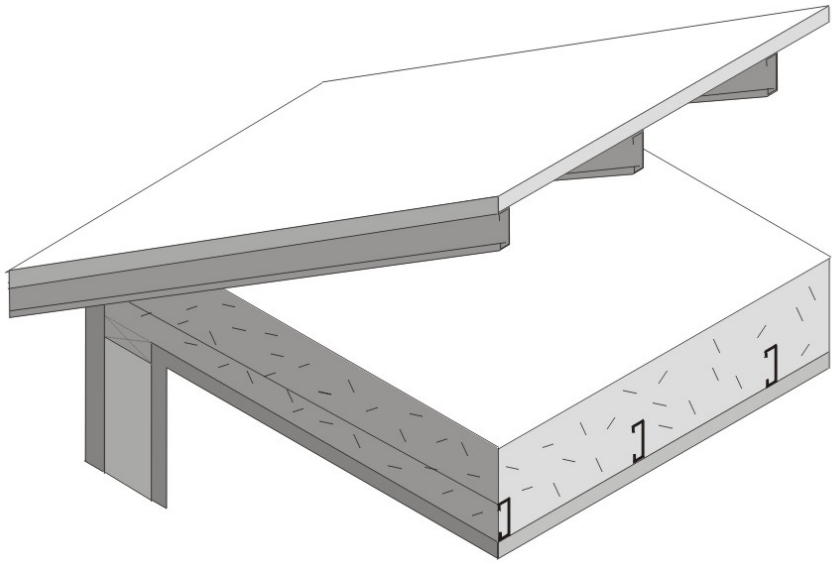

Figure 4.2.4 – Metal Framed Attic Roofs

Assumptions: These data are calculated using the zone method calculation documented in the 2005 ASHRAE Handbook of Fundamentals. These calculations assume an exterior air film of R-0.17, asphalt shingles of R-0.44 (AR02), building paper of R-0.06 (BP01), ½ inch of wood based sheathing (Custom), the attic air space (greater than 3.5 inch) of R-0.80, the insulation / framing layer, continuous insulation (if any) 1/2 inch gypsum of R-0.45 (GP01), and an interior air film (heat flow up) of R-0.61. The framing percentage is assumed to be 10 percent for 16 inch oncenter and 7 percent for 24 inch oncenter 7.25 percent of the attic insulation above the framing members is assumed to be at half depth, due to decreased depth of insulation at the eaves. Steel framing has 1.5 inch flange and is 0.0747 inch thick steel with no knockouts. U-factors calculated using EZ Frame 2.0B.

Table 4.2.5 – U-factors of Metal Framed Rafter Roofs

Spacing	R-Value of Insulation Between Framing	Nominal Framing Size		Rated R-value of Continuous Insulation[6]							
				R-0	R-2	R-4	R-6	R-7	R-8	R-10	R-14
				A	B	C	D	E	F	G	H
16 in. OC	None	Any	1	0.325	0.197	0.141	0.110	0.099	0.090	0.076	0.059
	R-11[2]	2x4	2	0.129	0.103	0.085	0.073	0.068	0.063	0.056	0.046
	R-13[2]	2x4	3	0.121	0.097	0.082	0.070	0.066	0.061	0.055	0.045
	R-15[2]	2x4	4	0.115	0.093	0.079	0.068	0.064	0.060	0.053	0.044
	R-19[2,3]	2x4	5	0.121	0.097	0.082	0.070	0.066	0.061	0.055	0.045
	R-11	2x6	6	0.123	0.099	0.082	0.071	0.066	0.062	0.055	0.045
	R-13	2x6	7	0.115	0.093	0.079	0.068	0.064	0.060	0.053	0.044
	R-15[2]	2x6	8	0.101	0.084	0.072	0.063	0.059	0.056	0.050	0.042
	R-19[2]	2x6	9	0.100	0.083	0.071	0.063	0.059	0.056	0.050	0.042
	R-19[2]	2x8	10	0.096	0.081	0.069	0.061	0.057	0.054	0.049	0.041
	R-21	2x8	11	0.093	0.078	0.068	0.060	0.056	0.053	0.048	0.040
	R-25	2x10	12	0.084	0.072	0.063	0.056	0.053	0.050	0.046	0.039
	R-30[4]	2x10	13	0.079	0.068	0.060	0.054	0.051	0.048	0.044	0.038
	R-30	2x12	14	0.076	0.066	0.058	0.052	0.050	0.047	0.043	0.037
	R-38 [4]	2x12	15	0.071	0.062	0.055	0.050	0.047	0.045	0.042	0.036
	R-38 [4]	2x14	16	0.068	0.060	0.053	0.048	0.046	0.044	0.040	0.035
	Sprayed Foam or Cellulose Insulation[2,5]	2x6	17	0.099	0.083	0.071	0.062	0.058	0.055	0.050	0.041
		2x8	18	0.087	0.074	0.065	0.057	0.054	0.051	0.047	0.039
		2x10	19	0.077	0.067	0.059	0.053	0.050	0.048	0.044	0.037
		2x12	20	0.069	0.061	0.054	0.049	0.047	0.044	0.041	0.035
		2x14	21	0.064	0.057	0.051	0.046	0.044	0.042	0.039	0.034
24 in. OC	None	Any	22	0.322	0.196	0.141	0.110	0.099	0.090	0.076	0.058
	R-11[2]	2x4	23	0.111	0.091	0.077	0.067	0.062	0.059	0.053	0.043
	R-13[2]	2x4	24	0.102	0.085	0.072	0.063	0.060	0.056	0.050	0.042
	R-15[2]	2x4	25	0.096	0.081	0.069	0.061	0.057	0.054	0.049	0.041
	R-19[2,3]	2x4	26	0.102	0.085	0.072	0.063	0.060	0.056	0.050	0.042
	R-11	2x6	27	0.107	0.088	0.075	0.065	0.061	0.058	0.052	0.043
	R-13	2x6	28	0.099	0.083	0.071	0.062	0.058	0.055	0.050	0.041
	R-15[2]	2x6	29	0.086	0.073	0.064	0.057	0.054	0.051	0.046	0.039
	R-19[2]	2x6	30	0.083	0.071	0.062	0.055	0.052	0.050	0.045	0.038
	R-19[2]	2x8	31	0.080	0.0690	0.061	0.054	0.051	0.049	0.044	0.038
	R-21	2x8	32	0.076	0.066	0.058	0.052	0.050	0.047	0.043	0.037
	R-25	2x10	33	0.068	0.060	0.053	0.048	0.046	0.044	0.040	0.035
	R-30[4]	2x10	34	0.063	0.056	0.050	0.046	0.044	0.042	0.039	0.033
	R-30	2x12	35	0.061	0.054	0.049	0.045	0.043	0.041	0.038	0.033
	R-38[4]	2x12	36	0.055	0.050	0.045	0.041	0.040	0.038	0.035	0.031
	R-38[4]	2x14	37	0.053	0.048	0.044	0.040	0.039	0.037	0.035	0.030
	Sprayed Foam or Cellulose	2x6	38	0.081	0.070	0.061	0.055	0.052	0.049	0.045	0.038
		2x8	39	0.070	0.061	0.055	0.049	0.047	0.045	0.041	0.035
		2x10	40	0.061	0.054	0.049	0.045	0.043	0.041	0.038	0.033

Insulation[2,5]	2x12	**41**	0.054	0.049	0.044	0.041	0.039	0.038	0.035	0.031
	2x14	**42**	0.049	0.045	0.041	0.038	0.036	0.035	0.033	0.029

Notes:

1. Rigid foam board used for cavity insulation must fill the entie cavity between the rafters and be sealed properly to prevent air gaps, and must be secured properly to prevent any future discrepancies in the construction assembly.

2. This assembly is only allowed where building officials approve rafter attic assemblies with no ventilation air spaces.

3. This assembly requires insulation with an R-value per inch 5.6 or larger (k-factor 1.8 or less). This is board type insulation, mostly Isocyanurate. Medium density spray polyurethane foam may also be used to meet this requirement if the quality installation procedures and documentation in Section 4.7 of Joint Appendix 4 are followed, Documentation from Directory of Certified insulation materials must be provided to show compliance with this assembly.

4. Higher density fiberglass batt is needed to achieve the indicated U-factor. R-30 must be achieved with less than 8.25 inch full thickness. R-38 must be achieved with less than 10.25 inch thickness (R-30c, R-38c).

5. Foamed plastic or cellulose insulation shall fill the entire cavity. Cellulose shall have a binder to prevent sagging. Verify that the building official in your area permits this construction, since there is no ventilation layer.

6. Continuous insulation shall be located at the ceiling or at the roof and be uninterrupted by framing . In climate zones 1 and 16 the insulating R-value of continuous insulation materials installed above the roofs waterproof membrane shall be multiplied by 0.8 before choosing the table column for determining assembly U-factor.

This table contains pre-calculated U-factors for metal-framed rafter roofs where the ceiling is the air barrier. This construction assembly is similar to that covered by Table 4.2.2 except that metal framing members are substituted for the wood-framing members. The rafters may be either flat or in a sloped application. Insulation is typically installed between the rafters. With this construction, the insulation is in contact with the ceiling and there is typically a one-inch air gap above the insulation so that moisture can be vented. Whether or not there is an air space above the insulation depends on local climate conditions and may not be required in some building permit jurisdictions. The building official will need to waive the air gap requirement to allow the use of cellulose insulation or sprayed foam.

U-factors are selected from Column A of this table when there is no continuous insulation. When continuous insulation is installed either at the ceiling or at the roof, then U-factors from other columns may be selected. The continuous insulation is typically a rigid polystyrene or polyisocyanurate foam insulation, but can also include mineral wool or other suitable materials.

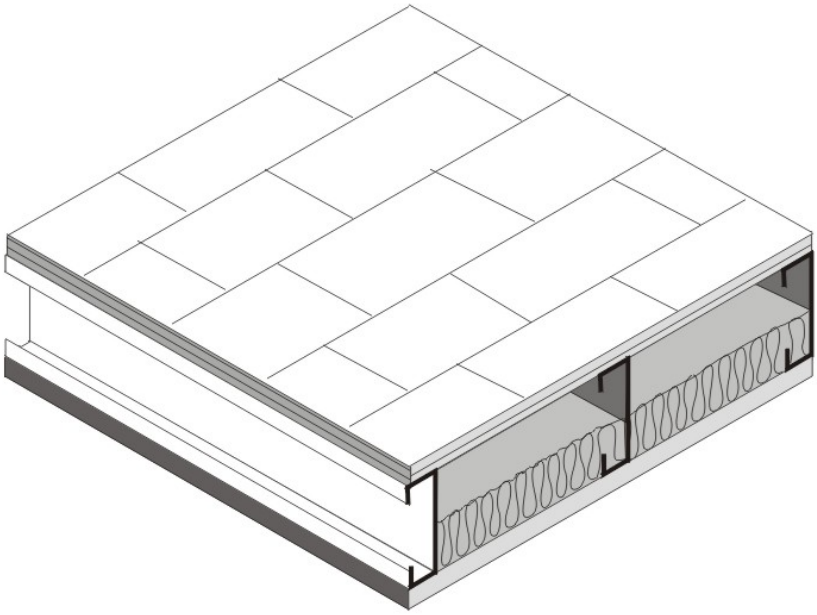

Figure 4.2.5 – Metal Framed Rafter Roof

When this table is used manually, the R-value of continuous insulation shall be equal to or greater than the R-value published in the continuous insulation columns. For instance if the insulation is R-3, the R-2 column shall be used. No interpolation is permitted when data from the table is used manually. CEC approved software, however, may determine the U-factor for any amount of continuous insulation and/or for unusual construction layers using Equation 4-1and Equation 4-2.

Assumptions: These data are calculated using the zone calculation method documented in the 2005 ASHRAE Handbook of Fundamentals. These calculations assume an exterior air film of R-0.17, asphalt shingles of R-0.44 (AR02), building paper of R-0.06 (BP01), ½ inch of wood based sheathing (Custom), the insulation / framing layer, ½ inch gypsum of R-0.45 (GP01), and an interior air film (heat flow up diagonally) of R-0.62 The continuous insulation may either be located at the ceiling or over the structural deck. The thickness of framing members is assumed to be 3.50, 5.50, 7.25, 9.25, and 11.25 in. for 2x4, 2x6, 2x8, 2x10, and 2x12 nominal sizes. High-density batt insulation is assumed to be 8.5 in. thick for R-30 and 10.5 in thick for R-38. Framing spacing is 10 percent for 16 inches on center and 7 percent for 24 inches on center. Steel framing has 1.5 inch flange and is 0.075 inch thick steel with no knockouts. U-factors calculated using EZ Frame 2.0B.

Table 4.2.6 –U-factors for Span Deck and Concrete Roofs

			R-value of Continuous Insulation									
			None	R-4	R-6	R-8	R-10	R-12	R-15	R-20	R-25	R-30
Fireproofing	**Concrete Topping Over Metal Deck**		**A**	**B**	**C**	**D**	**E**	**F**	**G**	**H**	**I**	**J**
Yes	None	**1**	0.348	0.145	0.113	0.092	0.078	0.067	0.056	0.044	0.036	0.030
	2 in.	**2**	0.324	0.141	0.110	0.090	0.076	0.066	0.055	0.043	0.036	0.030
	4 in.	**3**	0.302	0.137	0.107	0.088	0.075	0.065	0.055	0.043	0.035	0.030
	6 in.	**4**	0.283	0.133	0.105	0.087	0.074	0.064	0.054	0.042	0.035	0.030
No	None	**5**	0.503	0.167	0.125	0.100	0.083	0.071	0.059	0.045	0.037	0.031
	2 in.	**6**	0.452	0.161	0.122	0.098	0.082	0.070	0.058	0.045	0.037	0.031
	4 in.	**7**	0.412	0.156	0.119	0.096	0.080	0.069	0.057	0.045	0.036	0.031
	6 in.	**8**	0.377	0.150	0.116	0.094	0.079	0.068	0.057	0.044	0.036	0.031

1. In climate zones 1 and 16 the insulating R-value of continuous insulation materials installed above the roof waterproof membrane shall be multiplied by 0.8 before choosing the table column for determining assembly U-factor.

The constructions in this table are typical of Type I and Type II steel framed or concrete nonresidential buildings. The construction consists of a metal deck with or without a concrete topping. It may also be used for a metal deck or even wood deck ceiling as long as the insulation is continuous. Fireproofing may be sprayed onto the underside of the metal deck; it also covers steel structural members. Insulation is typically installed above the structural deck and below the waterproof membrane. This table may also be used for reinforced concrete roofs that do not have a metal deck. In this case, the fireproofing will typically not be installed and choices from the table should be made accordingly.

When this table is used manually, the R-value of continuous insulation shall be equal to or greater than the R-value published in the continuous insulation columns. No interpolation is permitted when data from the table is used manually. CEC approved compliance software, however, may determine the U-factor for any amount of continuous insulation and for unusual construction layers using Equation 4-1 and Equation 4-2. If the data is adjusted using Equation 4-2, the user shall take credit for a ceiling and the air space above the ceiling only if the ceiling serves as an air barrier. Suspended or T-bar ceilings do not serve as air barriers.

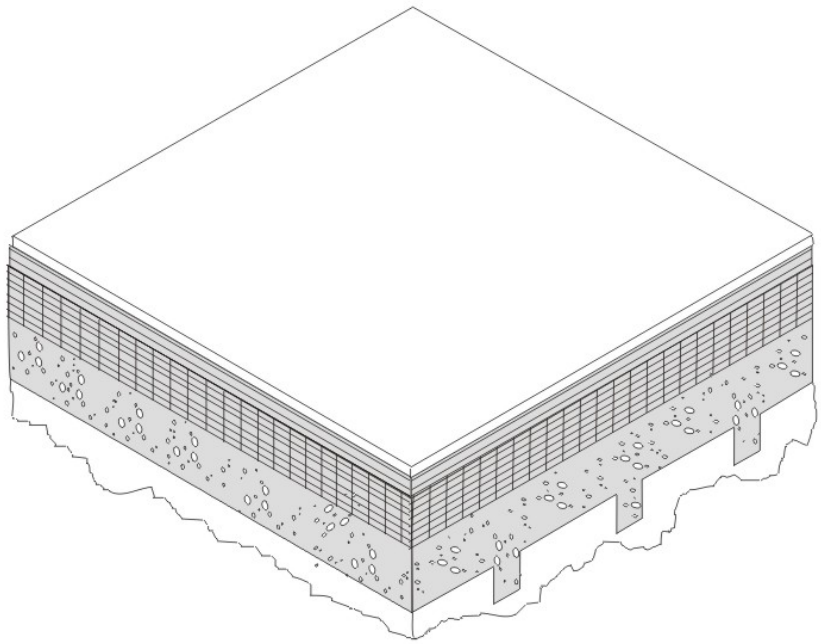

Figure 4.2.6 – Span Deck and Concrete Roof

Assumptions. These calculations are made using the parallel path method documented in the 2005 ASHRAE Handbook of Fundamentals. The assembly is assumed to consist of an exterior air film of R-0.17, a single ply roofing membrane (R-0.15), protective board (R-1.06), continuous insulation (if any), concrete topping with a density of 120 lb/ft and an R-value of 0.11 per inch (if any), metal span deck (negligible), and fireproofing (R-0.88). While a suspended ceiling typically exists below the structure, this is not considered part of the construction assembly therefore the same U-values are used for assemblies with or without suspended ceilings. The fireproofing is assumed to be equivalent to 60 lb/ft^3 concrete with a resistance of 0.44 per inch.

Table 4.2.7 – U-factors for Metal Building Roofs

			Rated R-value of Continuous Insulation									
			R-0	R-4	R-6	R-8	R-10	R-12	R-15	R-20	R-25	R-30
Insulation System	**R-Value of Insulation**		**A**	**B**	**C**	**D**	**E**	**F**	**G**	**H**	**I**	**J**
Screw Down Roofs (no Thermal Blocks)[2]	None	**1**	1.280	0.209	0.147	0.114	0.093	0.078	0.063	0.048	0.039	0.032
	R-10	**2**	0.153	0.095	0.080	0.069	0.060	0.054	0.046	0.038	0.032	0.027
	R-11	**3**	0.139	0.089	0.076	0.066	0.058	0.052	0.045	0.037	0.031	0.027
	R-13	**4**	0.130	0.086	0.073	0.064	0.057	0.051	0.044	0.036	0.031	0.027
	R-19	**5**	0.098	0.070	0.062	0.055	0.049	0.045	0.040	0.033	0.028	0.025
Standing Seam Roof with Single Layer of Insulation Draped over Purlins and Compressed. Thermal blocks at supports.[2]	R-10	**6**	0.097	0.070	0.061	0.055	0.049	0.045	0.040	0.033	0.028	0.025
	R-11	**7**	0.092	0.067	0.059	0.053	0.048	0.044	0.039	0.032	0.028	0.024
	R-13	**8**	0.083	0.062	0.055	0.050	0.045	0.042	0.037	0.031	0.027	0.024
	R-19	**9**	0.065	0.052	0.047	0.043	0.039	0.037	0.033	0.028	0.025	0.022
Standing Seam Roof with Double Layer of Insulation.[3] Thermal blocks at supports.[2]	R-10 + R-10	**10**	0.063	0.050	0.046	0.042	0.039	0.036	0.032	0.028	0.024	0.022
	R-10 + R-11	**11**	0.061	0.049	0.045	0.041	0.038	0.035	0.032	0.027	0.024	0.022
	R-11 + R-11	**12**	0.060	0.048	0.044	0.041	0.038	0.035	0.032	0.027	0.024	0.021
	R-10 + R-13	**13**	0.058	0.047	0.043	0.040	0.037	0.034	0.031	0.027	0.024	0.021
	R-11 + R-13	**14**	0.057	0.046	0.042	0.039	0.036	0.034	0.031	0.027	0.024	0.021
	R-13 + R-13	**15**	0.055	0.045	0.041	0.038	0.035	0.033	0.030	0.026	0.023	0.021
	R-10 + R-19	**16**	0.052	0.043	0.040	0.037	0.034	0.032	0.029	0.025	0.023	0.020
	R-11 + R-19	**17**	0.051	0.042	0.039	0.036	0.034	0.032	0.029	0.025	0.022	0.020
	R-13 + R-19	**17**	0.049	0.041	0.038	0.035	0.033	0.031	0.028	0.025	0.022	0.020
	R-19 + R-19	**18**	0.046	0.039	0.036	0.034	0.032	0.030	0.027	0.024	0.021	0.019
Filled Cavity with Thermal Blocks[2, 4]	R19 + R-10	**19**	0.041	0.035	0.033	0.031	0.029	0.027	0.025	0.023	0.020	0.018

Notes:

1. A roof must have metal purlins no closer than 4 ft on center to use this table. If the roof deck is attached to the purlins more frequently than 12 in oc, 0.008 must be added to the U-factors in this table.
2. Thermal blocks are an R-5 of rigid insulation, which extends 1" beyond the width of the purlin on each side.
3. Multiple R-values are listed in order from outside to inside. First layer is parallel to the purlins, and supported by a system; second layer is laid on top of the purlins.
4. In climate zones 1 and 16 the insulating R-value of continuous insulation materials installed above the roof waterproof membrane shall be multiplied times 0.8 before choosing the table column for determining assembly U-factor.

The U-factors in this table are intended for use with metal building roofs. This type of construction is typical for manufacturing and warehouse facilities, but is used for other building types as well. The typical method of insulating this type of building is to drape vinyl backed fiberglass insulation over the metal purlins before the metal deck is attached with metal screws. With this method, the insulation is compressed at the supports, reducing its effectiveness. The first part of the table contains values for this insulation technique. The second section of the table has data for the case when a thermal block is used at the support. The insulation is still compressed, but the thermal block, which generally consists of an 8 in. wide strip of foam insulation, improves the thermal performance. The third section of the table deals with systems that involve two layers of insulation.

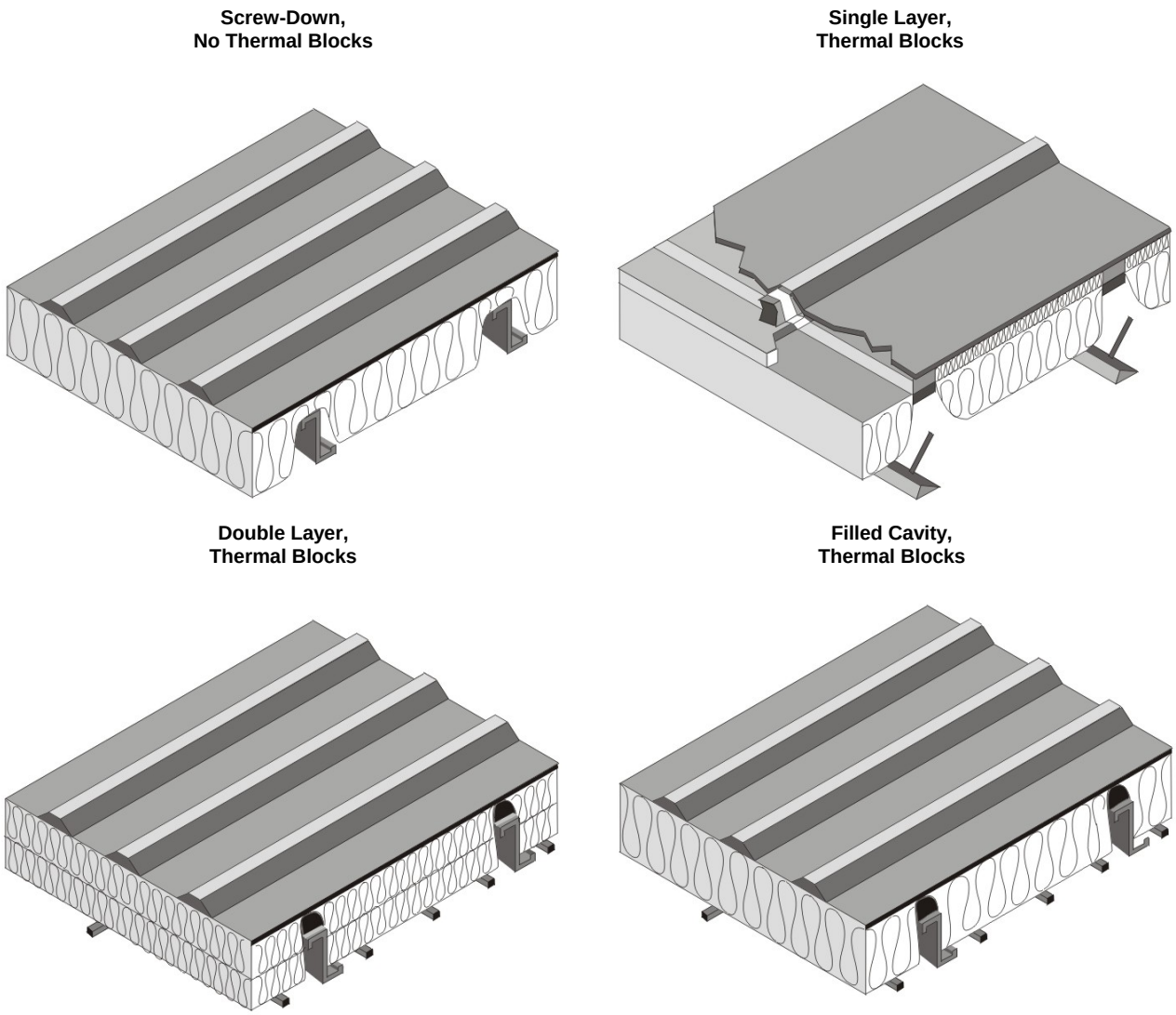

Figure 4.2.7 – Metal Building Roofs

For the majority of cases, values will be selected from column A of this table. Builders or designers may increase thermal performance by adding a continuous insulation layer between the metal decking and the structural supports. The continuous insulation is typically a rigid polystyrene or polyisocyanurate foam insulation.

When this table is used manually, the R-value of continuous insulation shall be equal to or greater than the R-value published in the continuous insulation columns. No interpolation is permitted when data from the table is used manually. CEC approved compliance software, however, may determine the U-factor for any amount of continuous insulation using Equation 4-1.

Assumptions: Data in Column A of this table is taken from the ASHRAE/IESNA Standard 90.1-2004, Appendix A. The data is also published in the NAIMA *Compliance for Metal Buildings*, 1997.

Table 4.2.8 – U-factors for Insulated Ceiling with Removable Panels

R-value of Insulation Over Suspended Ceiling		U-factor A
None	**1**	0.304
7	**2**	0.152
11	**3**	0.132
13	**4**	0.126
19	**5**	0.113
21	**6**	0.110
22	**7**	0.109
30	**8**	0.102
38	**9**	0.098
49	**10**	0.094
60	**11**	0.092

This table includes U-factors for the case of insulation placed over suspended ceilings. This situation is only permitted for a combined floor area no greater than 2,000 square feet in an otherwise unconditioned building, and when the average height of the space between the ceiling and the roof over these spaces is greater than 12 feet. The suspended ceiling does not provide an effective air barrier and leakage is accounted for in the calculations.

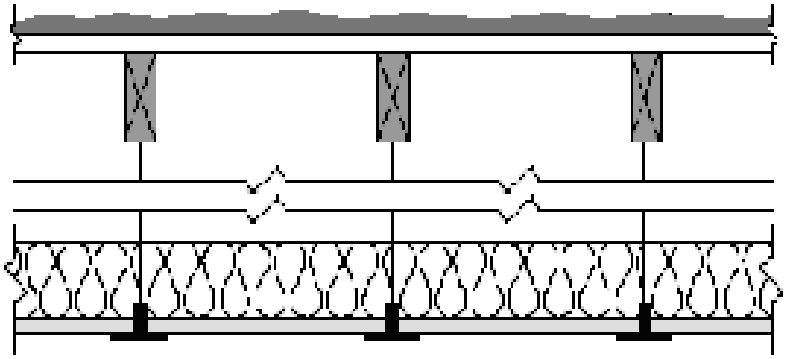

Figure 4.2.8 – Insulated Ceiling with Removable Panels

Assumptions. These calculations assume an exterior air film of R-0.17, a built-up roof of R-0.33 (BR01), ¾ inch wood based sheathing (Custom), a twelve foot air space of R-0.80, the insulation (for the insulated portion), removable ceiling panels with a R-0.50 and an interior air film (heat flow up) of R-0.61. 75% of the ceiling is assumed covered by insulation and the remainder is not insulated. The uninsulated portion includes lighting fixtures and areas where the insulation is not continuous. A correction factor of 0.005 is added to the resulting U-factor to account for infiltration through the suspended ceiling and lighting fixtures.

Table 4.2.9 – U-factors of Insulated Metal Panel Roofs and Ceilings

		U-factor (Btu/^{0}F-ft^2)
Panel Thickness		**A**
2”	**1**	0.079
2 ½”	**2**	0.064
3”	**3**	0.054
4”	**4**	0.041
5”	**5**	0.033
6”	**6**	0.028

This table contains thermal performance data (U-factors) for foamed-in-place, insulated metal panels consisting of liquid polyurethane or polyisocyanurate injected between metal skins in individual molds or on fully automated production lines. Metal building construction is the most common application for this product where the metal panel is fastened to the frame of the structure. This table can only be used for insulated panels that are factory built. This table does not apply to panels that utilize polystyrene, or to field applied products such as spray applied insulations.

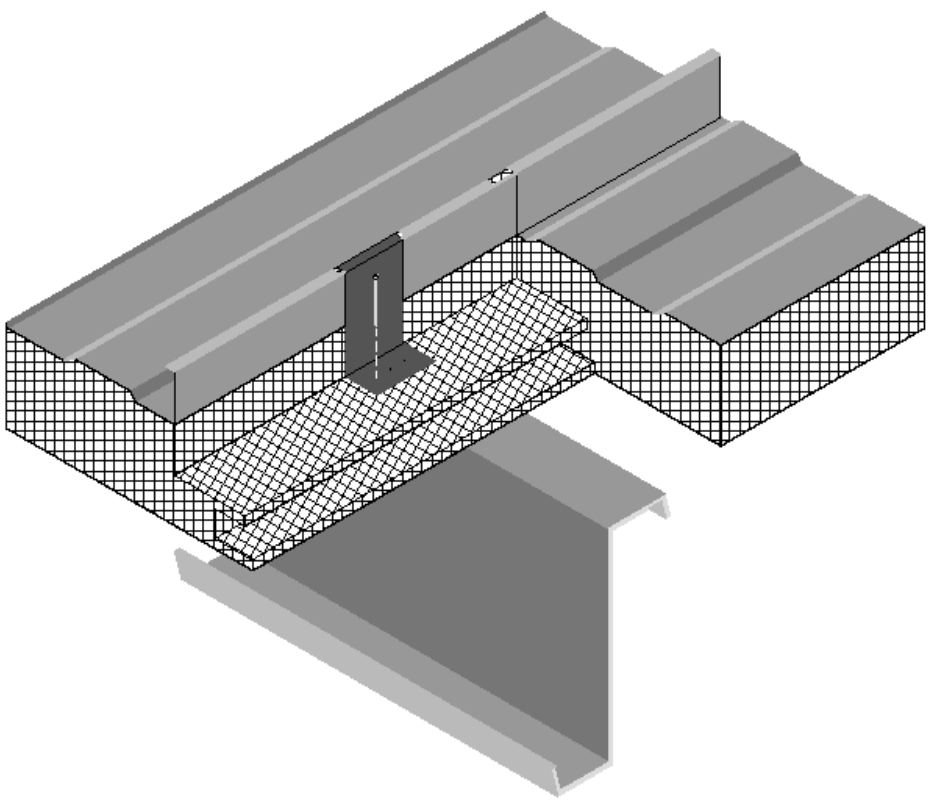

Figure 4.2.9 –Insulated Metal Panel Roofs

Assumptions. These data are calculated using the parallel path method documented in the 2005 ASHRAE Handbook of Fundamentals. These calculations assume an exterior air film of R-0.17, light gauge metal exterior of R-0.0747, continuous insulation R-5.9 per inch, light gauge metal interior of 0.0747 inch thickness and an interior air film (heat flow up) of R-0.61. The panels are assumed to be continuous with no framing penetration. The R-value of the light gauge metal is negligible.

4.3 Walls

Table 4.3.1 – U-factors of Wood Framed Walls

Spacing	Cavity Insulation	Nominal Framing Size		Rated R-value of Continuous Insulation [2]							
				R-0	R-2	R-4	R-6	R-7	R-8	R-10	R-14
				A	B	C	D	E	F	G	H
16 in. OC	None	Any	1	0.356	0.208	0.147	0.114	0.102	0.093	0.078	0.059
	R-11 batt	2x4	2	0.110	0.090	0.076	0.066	0.062	0.059	0.052	0.043
	R-13 batt	2x4	3	0.102	0.085	0.072	0.063	0.060	0.056	0.050	0.042
	R-15 batt [1]	2x4	4	0.095	0.080	0.069	0.061	0.057	0.054	0.049	0.041
	R-19 batt	2x6	5	0.074	0.064	0.057	0.051	0.049	0.046	0.043	0.036
	R-21 batt [1]	2x6	6	0.069	0.061	0.054	0.049	0.047	0.044	0.041	0.035
	R-19 batt	2x8	7	0.065	0.058	0.052	0.047	0.045	0.043	0.039	0.034
	R-22 batt	2x8	8	0.061	0.054	0.049	0.045	0.043	0.041	0.038	0.033
	R-25 batt	2x8	9	0.057	0.051	0.046	0.042	0.041	0.039	0.036	0.032
	R-30 batt 1	2x8	10	0.055	0.050	0.045	0.041	0.040	0.038	0.035	0.031
	R-30 batt	2x10	11	0.047	0.043	0.040	0.037	0.035	0.034	0.032	0.028
	R-38 batt	2x10	12	0.046	0.042	0.039	0.036	0.035	0.034	0.032	0.028
	R-38 batt	2x12	13	0.039	0.036	0.034	0.032	0.031	0.030	0.028	0.025
	Foamed Plastic or Cellulose Insulation3	2x4	14	0.103	0.085	0.073	0.064	0.060	0.056	0.051	0.042
		2x6	15	0.071	0.062	0.055	0.050	0.047	0.045	0.042	0.036
		2x8	16	0.056	0.050	0.046	0.042	0.040	0.039	0.036	0.031
		2x10	17	0.045	0.041	0.038	0.035	0.034	0.033	0.031	0.028
		2x12	18	0.038	0.035	0.033	0.031	0.030	0.029	0.028	0.025
24 in. OC	None	Any	19	0.362	0.210	0.148	0.114	0.102	0.093	0.078	0.060
	R-11 batt	2x4	20	0.106	0.087	0.074	0.065	0.061	0.057	0.051	0.043
	R-13 batt	2x4	21	0.098	0.082	0.070	0.062	0.058	0.055	0.049	0.041
	R-15 batt	2x4	22	0.091	0.077	0.067	0.059	0.056	0.053	0.048	0.040
	R-19 batt	2x6	23	0.071	0.062	0.055	0.050	0.047	0.045	0.042	0.036
	R-21 batt [1]	2x6	24	0.066	0.058	0.052	0.047	0.045	0.043	0.040	0.034
	R-19 batt	2x8	25	0.063	0.056	0.050	0.046	0.044	0.042	0.039	0.033
	R-22 batt	2x8	26	0.058	0.052	0.047	0.043	0.041	0.040	0.037	0.032
	R-25 batt	2x8	27	0.056	0.050	0.046	0.042	0.040	0.039	0.036	0.031
	R-30 batt 1	2x8	28	0.053	0.048	0.044	0.040	0.039	0.037	0.035	0.030
	R-30 batt	2x10	29	0.045	0.041	0.038	0.035	0.034	0.033	0.031	0.028
	R-38 batt	2x10	30	0.044	0.040	0.037	0.035	0.034	0.033	0.031	0.027
	R-38 batt	2x12	31	0.038	0.035	0.033	0.031	0.030	0.029	0.028	0.025
	Foamed Plastic or Cellulose Insulation3	2x4	32	0.099	0.083	0.071	0.062	0.058	0.055	0.050	0.041
		2x6	33	0.069	0.059	0.054	0.049	0.047	0.044	0.041	0.035
		2x8	34	0.054	0.049	0.044	0.041	0.039	0.038	0.035	0.031
		2x10	35	0.044	0.040	0.037	0.035	0.034	0.033	0.031	0.027
		2x12	36	0.036	0.034	0.031	0.030	0.029	0.028	0.026	0.024

Notes

1. Higher density fiberglass batt is required in these cases.
2. Continuous insulation may be installed on either the inside or the exterior of the wall, or both.
3. Foamed plastic and cellulose shall fill the entire cavity. Cellulose shall have a binder to prevent sagging.

This table contains U-factors for wood framed walls, which are typical of low-rise residential buildings and Type V nonresidential buildings. If continuous insulation is not used, then choices are made from Column A. In this case, the insulation is installed between the framing members. When continuous insulation is also used, this is typically installed on the exterior side of the wall, but can also be used on the inside. The continuous insulation is typically a rigid polystyrene or polyisocyanurate foam insulation.

When this table is used manually, the R-value of continuous insulation shall be equal to or greater than the R-value published in the continuous insulation columns. Continuous insulation of at least R-2 must exist in order to use this table. No interpolation is permitted when data from the table is used manually. CEC approved compliance software, however, may determine the U-factor for any amount of continuous insulation or for unusual construction assemblies using Equation 4-1 and Equation 4-2.

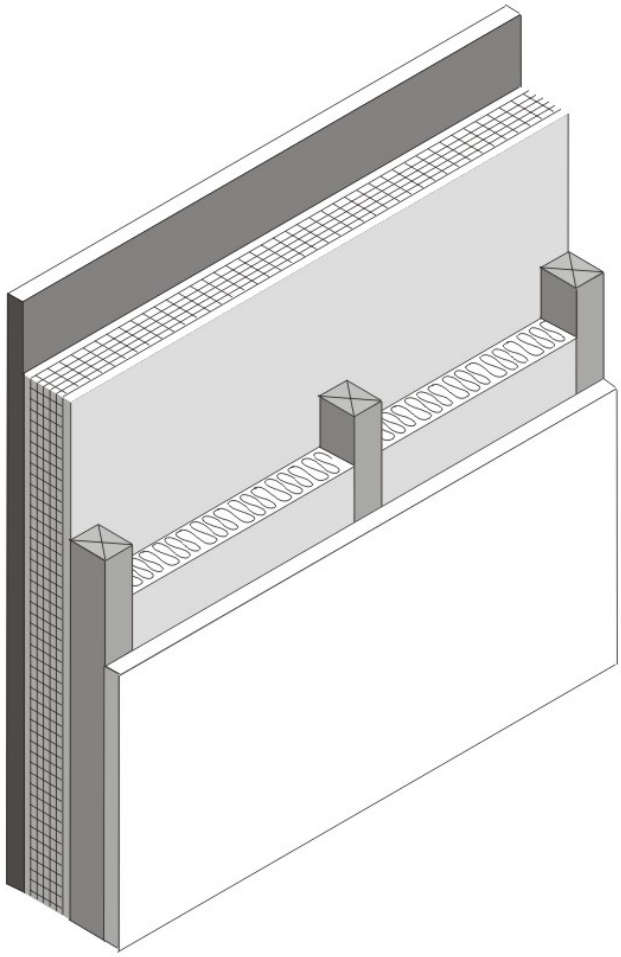

Figure 4.3.1 – Wood Framed Wall

Assumptions. Values in this table were calculated using the parallel heat flow calculation method, documented in the 2005 ASHRAE Handbook of Fundamentals. The construction assembly assumes an exterior air film of R-0.17, a 7/8 inch layer of stucco of R-0.18 (SC01), building paper of R-0.06 (BP01), continuous insulation (if any), the cavity insulation / framing layer, ½ inch gypsum board of R-0.45 (GP01), and an interior air film 0.68. The framing factor is assumed to be 25 percent for 16 inch stud spacing and 22 percent for 24 inch spacing. Foam plastic and cellulose are assumed to entirely fill the cavity and have a thermal resistance of R-3.6 per inch. Actual cavity depth is 3.5 inch for 2x4, 5.5 inch for 2x6, 7.25 inch for 2x8, 9.25 inch for 2x10, and 11.25 inch for 2x12. High density R-30 insulation is assumed to be 8.5 inch thick batt and R-38 is assumed to be 10.5 inch thick.

Table 4.3.2 – U-factors of Structurally Insulated Wall Panels (SIPS)

				Rated R-value of Continuous Insulation [2]							
				None	R-2	R-4	R-6	R-7	R-8	R-10	R-14
Type	**Insulation R-value**	**Framing or Spline Spacing**		**A**	**B**	**C**	**D**	**E**	**F**	**G**	**H**
Wood Spacers	R-14[1]	48 in. o.c.	**1**	0.077	0.067	0.059	0.053	0.050	0.048	0.043	0.037
	R-22	48 in. o.c.	**2**	0.053	0.048	0.044	0.040	0.039	0.037	0.035	0.031
	R-26 [3]	48 in o.c.	**3**	0.054	0.049	0.045	0.041	0.039	0.038	0.035	0.031
	R-28	48 in o.c.	**4**	0.042	0.039	0.036	0.034	0.033	0.032	0.030	0.027
	R-36	48 in o.c.	**5**	0.034	0.032	0.030	0.028	0.028	0.027	0.025	0.023
	R-40 [3]	48 in o.c.	**6**	0.038	0.035	0.033	0.031	0.030	0.029	0.027	0.025
	R-44	48 in o.c.	**7**	0.029	0.027	0.026	0.024	0.024	0.023	0.022	0.020
OSB Spline	R-14[1]	48 in. o.c.	**8**	0.061	0.055	0.049	0.045	0.043	0.041	0.038	0.033
	R-22	48 in. o.c.	**9**	0.041	0.038	0.036	0.033	0.032	0.031	0.029	0.026
	R-26	48 in o.c.	**10**	NA	NA	NA	NA	NA	NA	NA	NA
	R-28	48 in o.c.	**11**	0.032	0.030	0.029	0.027	0.026	0.026	0.024	0.022
	R-36	48 in o.c.	**12**	0.026	0.024	0.023	0.022	0.022	0.021	0.020	0.019
	R-40	48 in o.c.	**13**	NA	NA	NA	NA	NA	NA	NA	NA
	R-44	48 in o.c.	**14**	0.022	0.021	0.020	0.019	0.019	0.018	0.018	0.017

Notes:

1. The insulation R-value must be at least R-14 in order to use this table.

2 For credit, continuous insulation shall be at least R-2 and may be installed on either the inside or the exterior of the wall.

3. Entries for R-26 and R-40 correspond to SIP panels with a rigid polyisocyanurate insulation core which has a higher R–value per inch than the other assemblies but it is used in a thinner panels.

This table gives U-factors for structurally insulated panels used in wall construction. This is a construction system that consists of rigid foam insulation sandwiched between two layers of plywood or oriented strand board (OSB). Data is provided for two variations of this system. The system labeled “Wood Spacers” uses wood spacers to separate the plywood or OSB boards and provide a means to connect the panels with mechanical fasteners. The system labeled “OSB Spline” uses splines to connect the panels so that framing members does not penetrate the insulation.

If continuous insulation is not used, then choices are made from Column A. When continuous insulation is also used, this is typically installed on the exterior side of the wall, but can also be used on the inside. The continuous insulation is typically a rigid polystyrene or polyisocyanurate foam insulation. Adding continuous insulation to a SIPS panel is highly unusual since the panel itself is mostly continuous insulation.

When this table is used manually, the R-value of continuous insulation shall be equal to or greater than the R-value published in the continuous insulation columns. Continuous insulation of at least R-2 must exist in order to use this table. No interpolation is permitted when data from the table is used manually. CEC approved software, however, may determine the U-factor for any amount of continuous insulation or for unusual construction assemblies using Equation 4-1 and Equation 4-2.

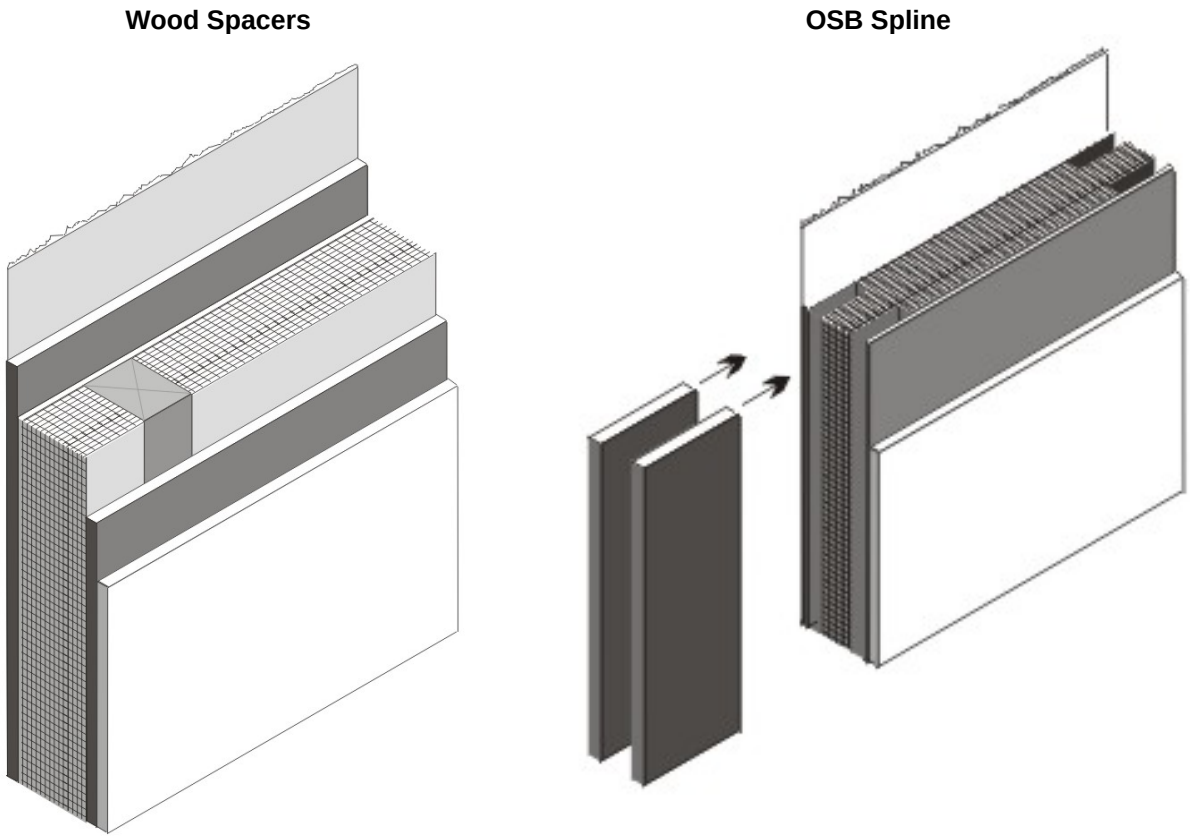

Figure 4.3.2 – Structurally Insulated Wall Panels (SIPS)
This figure shows just one way that panels are connected. Other options exist.

Assumptions: These data are calculated using the parallel path method documented in the 2005 ASHRAE Handbook of Fundamentals. These calculations assume an exterior air film of R-0.17, a 7/8 inch layer of stucco of R-0.18, building paper of R-0.06 (BP01), 7/16 inch of OSB of R-0.44, insulation at R-3.85 per inch (as specified), 7/16 inch of OSB of R-0.44, 1/2 inch gypsum board of R-0.45 (GP01), and an interior air film of R-0.68. The R-26 and R-40 wood spacer walls are calculated using polyisocyanurate insulation at R-7 per inch. A framing factor of 13 percent is assumed for wood spacers and 7 percent for the OSB spline system. Framing includes the sill plate, the header and framing around windows and doors

Table 4.3.3 – U-factors of Metal Framed Walls for Nonresidential Construction

				Rated R-value of Continuous Insulation [2]							
	Cavity Insulation R-Value:	Nominal Framing Size		R-0	R-2	R-4	R-6	R-7	R-8	R-10	R-14
Spacing				A	B	C	D	E	F	G	H
16 in. OC	None	Any	**1**	0.458	0.239	0.162	0.122	0.109	0.098	0.082	0.062
	R-11	2x4	**2**	0.244	0.155	0.118	0.096	0.087	0.080	0.069	0.054
	R-13	2x4	**3**	0.217	0.151	0.116	0.094	0.086	0.079	0.068	0.054
	R-15	2x4	**4**	0.211	0.148	0.114	0.093	0.085	0.078	0.068	0.053
	R-19	2x6	**5**	0.183	0.134	0.106	0.087	0.080	0.074	0.065	0.051
	R-21[1]	2x6	**6**	0.178	0.131	0.104	0.086	0.079	0.073	0.064	0.051
	R-19	2x8	**7**	0.164	0.123	0.099	0.083	0.076	0.071	0.062	0.050
	R-22	2x8	**8**	0.160	0.121	0.098	0.082	0.075	0.070	0.062	0.049
	R-25	2x8	**9**	0.158	0.120	0.097	0.081	0.075	0.070	0.061	0.049
	R-30[1]	2x8	**10**	0.157	0.119	0.096	0.081	0.075	0.070	0.061	0.049
	R-30	2x10	**11**	0.140	0.109	0.090	0.076	0.071	0.066	0.058	0.047
	R-38[1]	2x10	**12**	0.139	0.109	0.089	0.076	0.070	0.066	0.058	0.047
	R-38	2 x 12	**13**	0.124	0.099	0.083	0.071	0.066	0.062	0.055	0.045
	Foamed Plastic or Cellulose Insulation[3]	2 x 4	**14**	0.218	0.152	0.116	0.094	0.086	0.079	0.069	0.054
		2 x 6	**15**	0.179	0.132	0.104	0.086	0.079	0.074	0.064	0.051
		2 x 8	**16**	0.157	0.119	0.096	0.081	0.075	0.070	0.061	0.049
		2 x 10	**17**	0.138	0.108	0.089	0.075	0.070	0.066	0.058	0.047
		2 x 12	**18**	0.123	0.099	0.082	0.071	0.066	0.062	0.055	0.045
24 in. OC	None	Any	**24**	0.455	0.238	0.161	0.122	0.109	0.098	0.082	0.062
	R-11	2x4	**25**	0.210	0.148	0.114	0.093	0.085	0.078	0.068	0.053
	R-13	2x4	**26**	0.203	0.144	0.112	0.092	0.084	0.077	0.067	0.053
	R-15	2x4	**27**	0.197	0.141	0.110	0.090	0.083	0.076	0.066	0.052
	R-19	2x6	**28**	0.164	0.123	0.099	0.083	0.076	0.071	0.062	0.050
	R-21[1]	2x6	**29**	0.161	0.122	0.098	0.082	0.076	0.070	0.062	0.049
	R-19	2x8	**30**	0.153	0.117	0.095	0.080	0.074	0.069	0.060	0.049
	R-22	2x8	**21**	0.149	0.115	0.093	0.079	0.073	0.068	0.060	0.048
	R-25	2x8	**32**	0.147	0.114	0.093	0.078	0.072	0.068	0.060	0.048
	R-30[1]	2x8	**33**	0.146	0.113	0.092	0.078	0.072	0.067	0.059	0.048
	R-30	2x10	**34**	0.130	0.103	0.086	0.073	0.068	0.064	0.057	0.046
	R-38[1]	2x10	**35**	0.128	0.102	0.085	0.072	0.068	0.063	0.056	0.046
	R-38	2 x 12	**36**	0.115	0.093	0.079	0.068	0.064	0.060	0.053	0.044
	Foamed Plastic or Cellulose Insulation[3]	2 x 4	**37**	0.204	0.145	0.112	0.092	0.084	0.078	0.067	0.053
		2 x 6	**38**	0.167	0.125	0.100	0.083	0.077	0.071	0.063	0.050
		2 x 8	**39**	0.146	0.113	0.092	0.078	0.072	0.067	0.059	0.048
		2 x 10	**40**	0.128	0.102	0.085	0.072	0.068	0.063	0.056	0.046
		2 x 12	**41**	0.114	0.093	0.078	0.068	0.063	0.060	0.053	0.044

Notes

1. Higher density fiberglass batt is required in these cases.
2. Continuous insulation may be installed on either the inside or the exterior of the wall, or both.
3. Foamed plastic and cellulose shall fill the entire cavity. Cellulose shall have a binder to prevent sagging.

This table contains U-factors for steel or metal-framed walls, which are typical of nonresidential buildings. The table may be used for any construction assembly where the primary insulation is installed in a metal-framed wall, e.g. uninsulated curtain walls with metal furring on the inside.

If continuous insulation is not used, then choices are made from Column A. In this case, the insulation is installed only between the framing members. When continuous insulation is also used, it is typically installed on the exterior side of the wall, but can also be used on the inside. The continuous insulation is typically a rigid polystyrene or polyisocyanurate foam insulation.

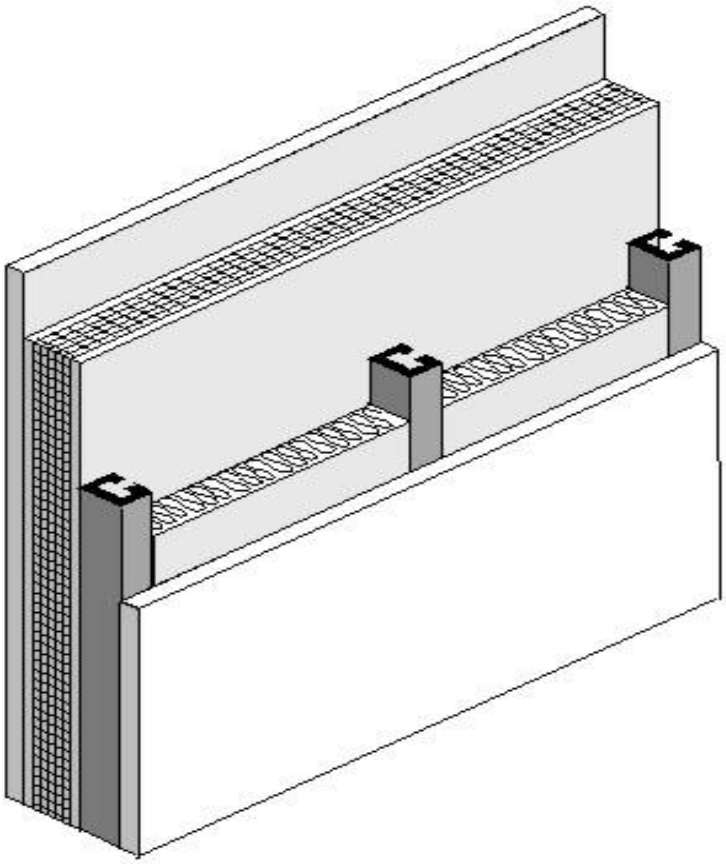

Figure 4.3.3 – Metal Framed Wall

When this table is used manually, the R-value of continuous insulation shall be equal to or greater than the R-value published in the continuous insulation columns. Continuous insulation of at least R-2 must exist in order to use values for continuous insulation. No interpolation is permitted when data from the table is used manually. CEC approved ACMs, however, may determine the U-factor for any amount of continuous insulation or for unusual construction assemblies using Equation 4-1 and Equation 4-2.

Assumptions: Values in this table were calculated using the zone calculation method. The construction assembly assumes an exterior air film of R-0.17, a 7/8 inch layer of stucco of R-0.18, building paper of R-0.06 (BP01), continuous insulation (if any), the insulation / framing layer, 1/2 inch gypsum of R-0.45 gypsum board (GP01), and an interior air film 0.68. The steel framing is assumed to be 0.0747 inch thick with a 15 percent knock out. The framing factor is assumed to be 25 percent for 16 inch stud spacing and 22 percent for 24 inch spacing. The EZFrame internal default framing percentages are 15 percent for 16 inch stud spacing and 12 percent for 24 inch spacing. To account for the increased wall framing percentage the frame spacing input to the EZ Frame program is reduced to 13.218 inches for 16 inch stud spacing and 15.231 inches for 24 inch stud spacing. Foam plastic and cellulose are assumed to entirely fill the cavity and have a thermal resistance of R-3.6 per inch. Actual cavity depth is 3.5 inch for 2x4, 5.5 inch for 2x6, 7.25 inch for 2x8, 9.25 inch for 2x10, and 11.25 inch for 2x12. High density R-30 insulation is assumed to be 8.5 inch thick batt and R-38 is assumed to be 10.5 inch thick.

Table 4.3.4 – U-factors of Metal Framed Walls for Residential Construction

Spacing	Cavity Insulation R-Value:	Nominal Framing Size		R-0	R-2	R-4	R-5	R-6	R-7
				A	B	C	D	E	F
16 in. OC	None	Any	**1**	0.455	0.238	0.161	0.139	0.122	0.109
	R-11	2x4	**2**	0.200	0.137	0.107	0.097	0.088	0.081
	R-13	2x4	**3**	0.192	0.132	0.105	0.095	0.087	0.080
	R-15	2x4	**4**	0.186	0.129	0.102	0.093	0.085	0.078
	R-19	2x6	**5**	0.154	0.112	0.092	0.084	0.077	0.072
	R-21[1]	2x6	**6**	0.151	0.110	0.090	0.083	0.076	0.071
	R-19	2x8	**7**	0.134	0.102	0.085	0.078	0.072	0.067
	R-22	2x8	**8**	0.129	0.099	0.082	0.076	0.071	0.066
	R-25	2x8	**9**	0.125	0.096	0.081	0.075	0.069	0.065
	R-30[1]	2x8	**10**	0.120	0.093	0.078	0.073	0.068	0.063
	R-30	2x10	**11**	0.109	0.086	0.073	0.068	0.064	0.060
	R-38[1]	2x10	**12**	0.104	0.082	0.071	0.066	0.062	0.058
	R-38	2 x 12	**13**	0.095	0.077	0.067	0.062	0.059	0.055
	Foamed Plastic or Cellulose Insulation[3]	2 x 4	**14**	0.177	0.131	0.104	0.094	0.086	0.079
		2 x 6	**15**	0.152	0.119	0.095	0.087	0.080	0.074
		2 x 8	**16**	0.121	0.098	0.082	0.076	0.070	0.066
		2 x 10	**17**	0.105	0.0.87	0.074	0.069	0.064	0.060
		2 x 12	**18**	0.092	0.077	0.067	0.063	0.059	0.056
24 in. OC	None	Any	**24**	0.449	0.236	0.161	0.138	0.121	0.108
	R-11	2x4	**25**	0.189	0.131	0.104	0.094	0.086	0.079
	R-13	2x4	**26**	0.181	0.127	0.101	0.092	0.084	0.078
	R-15	2x4	**27**	0.175	0.123	0.099	0.090	0.082	0.076
	R-19	2x6	**28**	0.144	0.107	0.088	0.081	0.075	0.070
	R-21[1]	2x6	**29**	0.141	0.105	0.086	0.080	0.074	0.069
	R-19	2x8	**30**	0.126	0.097	0.081	0.075	0.070	0.065
	R-22	2x8	**31**	0.121	0.094	0.079	0.073	0.068	0.064
	R-25	2x8	**32**	0.117	0.091	0.077	0.071	0.067	0.063
	R-30[1]	2x8	**33**	0.112	0.088	0.075	0.069	0.065	0.061
	R-30	2x10	**34**	0.102	0.081	0.070	0.065	0.061	0.058
	R-38[1]	2x10	**35**	0.096	0.077	0.067	0063	0.059	0.056
	R-38	2 x 12	**36**	0.088	0.072	0.063	0.059	0.056	0.053
	Foamed Plastic or Cellulose Insulation[3]	2 x 4	**37**	0.182	0.133	0.105	0.095	0.087	0.080
		2 x 6	**38**	0.146	0.112	0.092	0.084	0.078	0.072
		2 x 8	**39**	0.121	0.097	0.081	0.075	0.070	0.066
		2 x 10	**40**	0.101	0.084	0.072	0.067	0.063	0.059
		2 x 12	**41**	0.087	0.074	0.064	0.060	0.057	0.054

This table contains U-factors for steel or metal framed walls in low-rise residential buildings where the thickness of the framing members is 18 gauge or thinner. Table 4.3 in Joint Appendix 4 must be used for steel or metal-.framed walls in nonresidential buildings (including high-rise residential buildings and hotels and motels) and in low rise residential buildings if the thickness of the framing members are thinner than 18 gauge.

If continuous insulation is not used, then choices are made from Column A. In this case, the insulation is installed only between the framing members. When continuous insulation is also used, it is typically installed

on the exterior side of the wall, but can also be used on the inside. The continuous insulation is typically a rigid polystyrene or polyisocyanurate foam insulation.

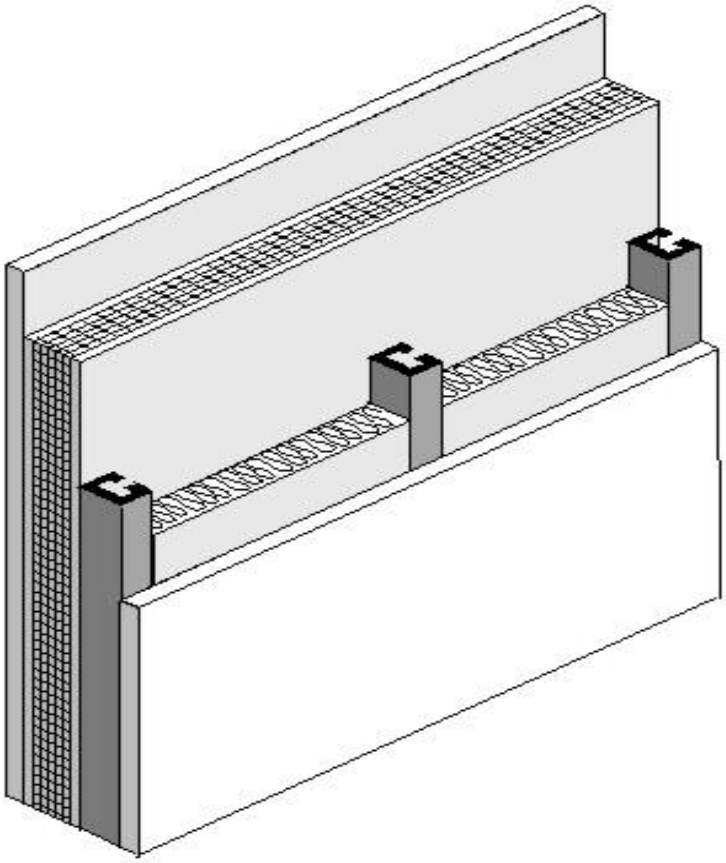

Figure 4.3.4 – Metal Framed Wall

When this table is used manually, the R-value of continuous insulation shall be equal to or greater than the R-value published in the continuous insulation columns. Continuous insulation of at least R-2 must exist in order to use values for continuous insulation. No interpolation is permitted when data from the table is used manually. CEC approved ACMs, however, may determine the U-factor for any amount of continuous insulation or for unusual construction assemblies using Equation 4-1 and Equation 4-2.

Assumptions: Values in this table were calculated using the zone calculation method. The construction assembly assumes an exterior air film of R-0.17, a 7/8 inch layer of siding or stucco averaging R-0.18, building paper of R-0.06 (BP01), continuous insulation (if any), the insulation / framing insulation layer, 1/2 inch gypsum of R-0.45 gypsum board (GP01), and an interior air film 0.68. The framing factor is assumed to be 25 percent for 16 inch stud spacing and 22 percent for 24 inch spacing. To account for the increased wall framing percentage, the frame spacing input to the EZ Frame program is reduced to 13.218 inches for 16 inch stud spacing and 15.231 inches for 24 inch stud spacing. The stud web thickness is assumed to be 0.038 inches, which is a 50/50 mix of 18 gauge and 20 gauge C-channel studs. This value was confirmed to be representative of low-rise residential construction by polling several California-based light-gauge steel structural engineers and light-gauge steel framers. Foam plastic and cellulose are assumed to entirely fill the cavity and have a thermal resistance of R-3.6 per inch. Actual cavity depth is 3.5 inch for 2x4, 5.5 inch for 2x6, 8 inch for 2x8, 10 inch for 2x10, and 12 inches for 2x12. High density R-30 insulation is assumed to be 8.5 inch thick batt and R-38 is assumed to be 10.5 inches thick.

Table 4.3.5 – Properties of Hollow Unit Masonry Walls

			Partly Grouted with Ungrouted Cells								
			Solid Grout			Empty			Insulated		
Thickness	**Type**		A			B			C		
		1	U-factor	C-factor	HC	U-factor	C-factor	HC	U-factor	C-factor	HC
12"	LW CMU	**2**	0.51	0.90	23	0.43	0.68	14.8	0.30	0.40	14.8
	MW CMU	**3**	0.54	1.00	23.9	0.46	0.76	15.6	0.33	0.46	15.6
	NW CMU	**4**	0.57	1.11	24.8	0.49	0.84	16.5	0.36	0.52	16.5
10"	LW CMU	**5**	0.55	1.03	18.9	0.46	0.76	12.6	0.34	0.48	12.6
	MW CMU	**6**	0.59	1.18	19.7	0.49	0.84	13.4	0.37	0.54	13.4
	NW CMU	**7**	0.62	1.31	20.5	0.52	0.93	14.2	0.41	0.63	14.2
8"	LW CMU	**8**	0.62	1.31	15.1	0.50	0.87	9.9	0.37	0.54	9.9
	MW CMU	**9**	0.65	1.45	15.7	0.53	0.96	10.5	0.41	0.63	10.5
	NW CMU	**10**	0.69	1.67	16.3	0.56	1.07	11.1	0.44	0.70	11.1
	Clay Unit	**11**	0.57	1.11	15.1	0.47	0.78	11.4	0.39	0.58	11.4
6"	LW CMU	**12**	0.68	1.61	10.9	0.54	1.00	7.9	0.44	0.70	7.9
	MW CMU	**13**	0.72	1.86	11.4	0.58	1.14	8.4	0.48	0.81	8.4
	NW CMU	**14**	0.76	2.15	11.9	0.61	1.27	8.9	0.52	0.93	8.9
	Clay Unit	**15**	0.65	1.45	11.1	0.52	0.93	8.6	0.45	0.73	8.6

The walls addressed in this table are rarely used in residential construction, but are common in some types of nonresidential construction. The tables include four types of hollow masonry units: lightweight concrete masonry units (CMU), medium weight CMU, normal weight CMU, and hollow clay masonry units. ASTM C-90 defines these masonry products in more detail.

Masonry used in California must be reinforced to withstand wind loads and earthquakes. This is achieved by installing reinforcing steel and grouting the cells in both a vertical and horizontal direction. Since grouting the cells affects thermal performance, data is provided for three cases: where every cell is grouted, where the cells are partially grouted and the remaining cells are left empty, and where the cells are partially grouted and the remaining cells are filled with perlite or some other insulating material.

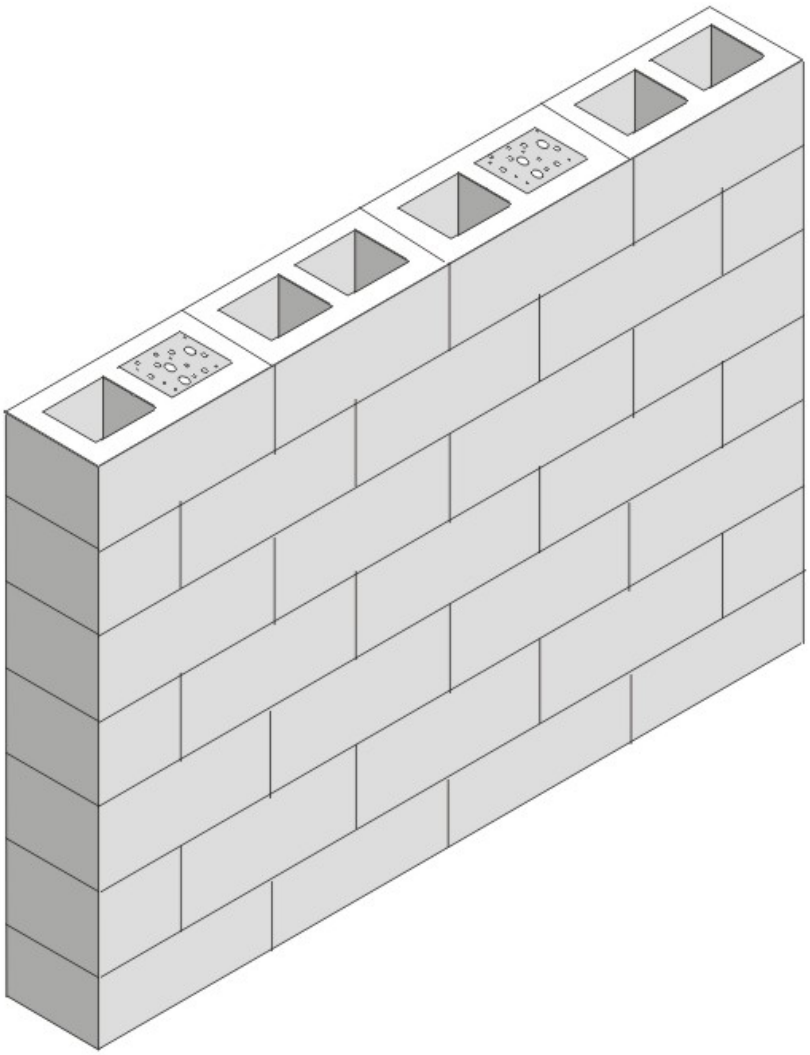

Figure 4.3.5 – Masonry Wall

For each of these conditions the U-factor, C-factor and heat capacity (HC) is published. There are other properties of mass materials that may be needed in compliance calculations, but these values can be determined from the published data using the procedures in Modeling Constructions in the Nonresidential ACM contained at the end of this appendix.

Assumptions: Data is taken from *Energy Calculations and Data*, CMACN, 1986, Berkeley Solar Group; Concrete Masonry Association of California and Nevada. The density of the CMU material (not counting the grouted or hollow cells) is 105 lb/ft³ for lightweight, 115 lb/ft³ for medium weight and 125 lb/ft³ for normal weight. The density of the clay unit material is 130 lb/ft³. For all four types of masonry units, data is provided for thicknesses of 6 in., 8 in., 10 in., and 12 in. For the partially grouted cases, vertical cells are assumed to be grouted at 32 in. OnCenter. Reinforcing in the horizontal direction is at 48 in. OC. Wall thicknesses given in the table are nominal; actual thicknesses are 3/8 in. less. Insulating material inside unit masonry hollow is assumed to be perlite.

Table 4.3.6 – Properties of Solid Unit Masonry and Solid Concrete Walls

			Wall Thickness, inches									
			3	**4**	**5**	**6**	**7**	**8**	**9**	**10**	**11**	**12**
Type	**Property**		**A**	**B**	**C**	**D**	**E**	**F**	**G**	**H**	**I**	**J**
LW CMU	U-Factor		0.79	0.71	0.65	0.59	0.54	0.51	0.47	0.44	0.42	0.39
	C-Factor	**1**	2.38	1.79	1.43	1.18	1.01	0.88	0.79	0.71	0.65	0.59
	HC		5.3	7.00	8.80	10.50	12.30	14.00	15.80	17.50	19.30	21.00
MW CMU	U-Factor		0.84	0.77	0.70	0.65	0.61	0.57	0.53	0.50	0.48	0.45
	C-Factor	**2**	2.94	2.22	1.75	1.47	1.25	1.10	0.98	0.88	0.80	0.74
	HC		5.80	7.70	9.60	11.5	13.40	15.30	17.30	19.20	21.10	23.00
NW CMU	U-Factor		0.88	0.82	0.76	0.71	0.67	0.63	0.60	0.56	0.53	0.51
	C-Factor	**3**	3.57	2.70	2.17	1.79	1.54	1.35	1.20	1.03	0.98	0.90
	HC		6.30	8.30	10.40	12.50	14.6	16.70	18.80	20.80	22.90	25.00
Clay Brick	U-Factor		0.80	0.72	0.66	na	na	Na	na	Na	na	na
	C-Factor	**4**	2.50	1.86	1.50	na	na	Na	na	Na	na	na
	HC		6.30	8.40	10.43	na	na	Na	na	Na	na	na
Concrete	U-Factor		0.96	0.91	0.86	0.82	0.78	0.74	0.71	0.68	0.65	0.63
	C-Factor	**5**	5.22	4.02	3.20	2.71	2.31	1.99	1.79	1.61	1.45	1.36
	HC		7.20	9.60	12.00	14.40	16.80	19.20	21.60	24.00	26.40	28.80

This table provides thermal performance information for solid masonry units and solid concrete walls.

The walls addressed in this table are rarely used in residential construction, but are common in some types of nonresidential construction.

There are other properties of mass materials that may be needed in compliance calculations, but these values can be determined from the published data using the procedures in Modeling Constructions in the Nonresidential ACM contained at the end of ACM Joint Appendix 4.

When insulation is added to the outside of masonry walls and/or when the inside is furred and insulated, the performance data in this table may be adjusted using Equation 4-4 and Equation 4-5 in coordination with Table 4.3.13.

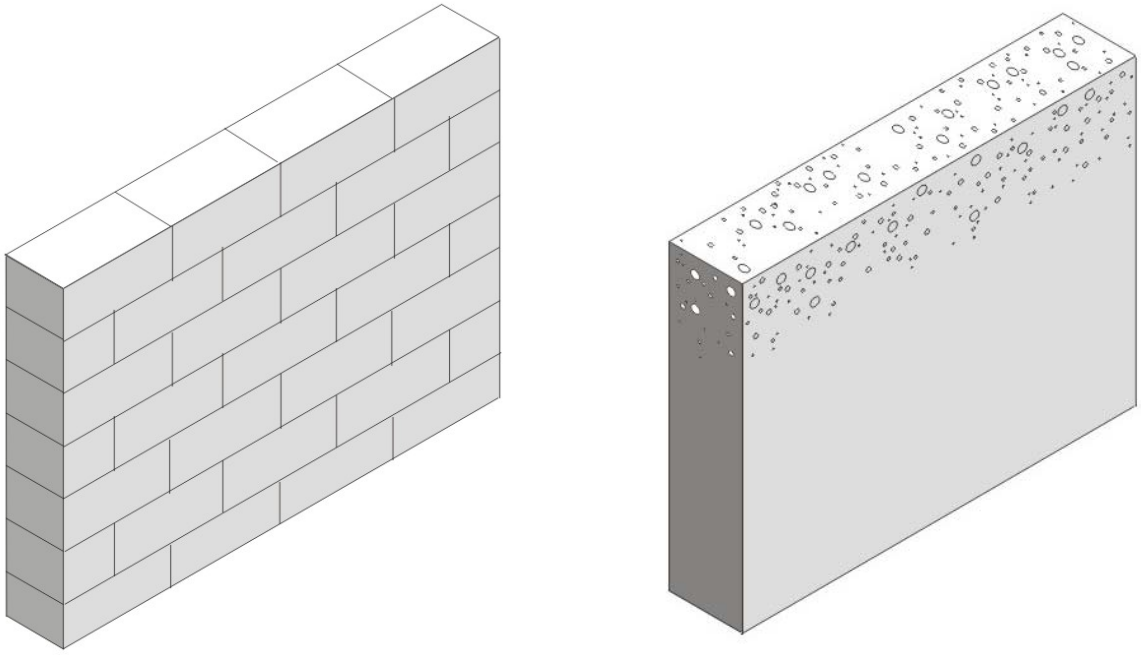

Figure 4.3.6 – Solid Unit Masonry (left) and Solid Concrete (right) Walls

Assumptions: Data is taken from ASHRAE/IESNA Standard 90.1-2004. The density of the CMU material is 105 lb/ft³ for lightweight, 115 lb/ft³ for medium weight and 125 lb/ft³ for normal weight. The density of the clay unit material is 130 lb/ft³ and the density of the concrete is 144 lb/ft³. For all five types of masonry walls, the U-factor, C-factor and heat capacity (HC) is provided for thicknesses of 3 in., 4 in., and 5 in. ASTM C-90 provides more information on the classification of masonry walls.

Table 4.3.7 – Properties of Concrete Sandwich Panels

Percent Concrete Web	Steel Penetrates Insulation	Performance Factor		Insulation Thickness (R-value)				
				1.5 (7.0)	**2.0 (9.3)**	**3.0 (14.0)**	**4.0 (18.6)**	**6.0 (27.9)**
				A	**B**	**C**	**D**	**E**
0%	No	U-factor	**1**	0.122	0.095	0.066	0.051	0.034
		C-factor		0.136	0.104	0.070	0.053	0.035
		HC		16.13	16.13	16.13	16.13	16.13
	Yes	U-factor	**2**	0.164	0.128	0.091	0.070	0.048
		C-factor		0.190	0.144	0.099	0.074	0.050
		HC		16.13	16.13	16.13	16.13	16.13
10%	No	U-factor	**3**	0.476	0.435	0.345	0.286	0.217
		C-factor		0.800	0.690	0.488	0.377	0.267
		HC		16.53	16.66	16.93	17.20	17.74
	Yes	U-factor	**4**	0.500	0.435	0.357	0.303	0.227
		C-factor		0.870	0.690	0.513	0.408	0.282
		HC		16.53	16.66	16.93	17.20	17.74
20%	No	U-factor	**5**	0.588	0.556	0.476	0.417	0.333
		C-factor		1.176	1.053	0.800	0.645	0.465
		HC		16.93	17.20	17.74	18.28	19.35
	Yes	U-factor	**6**	0.588	0.556	0.476	0.417	0.333
		C-factor		1.176	1.053	0.800	0.645	0.465
		HC		16.93	17.20	17.74	18.28	19.35

This table provides U-factors, C-factors, and heat capacity (HC) data for concrete sandwich panels. Concrete sandwich panels, as the name suggests, consist of two layers of concrete that sandwich a layer of insulation. The wall system can be constructed in the field or in a factory. One method of field construction is where the wall panels are formed in a flat position using the concrete floor slab of the building as the bottom surface. After the panel has set, it is hoisted with a crane into its final vertical position.

Both the percent of concrete web and the percent steel are factors in determining the thermal performance of walls. The insulation layer in this type of concrete sandwich panel generally does not extend over the entire surface of the wall. To provide structural integrity, a certain portion of the wall is solid concrete, which ties together the two concrete layers. This portion is known as the concrete web. The thermal performance of concrete sandwich panels depends on the percent of the wall that is concrete web. Data is provided for concrete webs representing 0%, 10% and 20% of the opaque wall surface. In some cases, the concrete layers are tied together by structural steel that penetrates the insulation layer. Data is provided for the case where this steel is present and for cases where it is not.

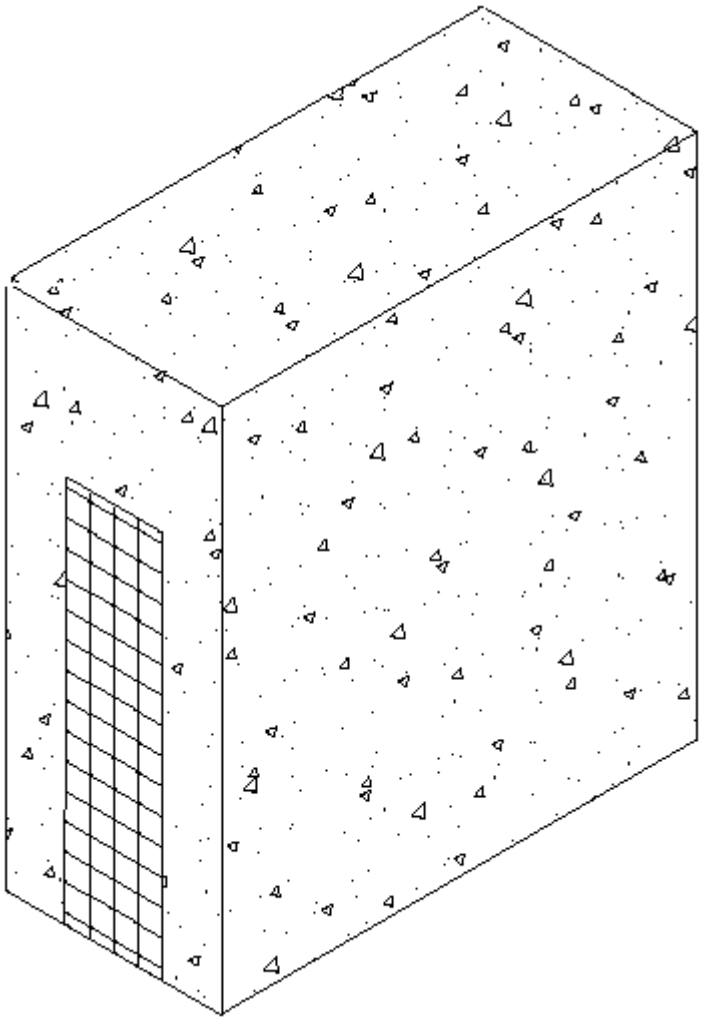

Figure 4.3.7 – Concrete Sandwich Panel

Other properties of mass materials such as density, conductivity, specific heat and wall weight may be needed in compliance calculations and these properties may be determined from the published data in Table 4.3.7 using the procedures in Modeling Constructions in the Nonresidential ACM contained at the end of this ACM Joint Appendix 4.

Values from this table may be combined with values from Table 4.3.13 when a furring layer is added to the inside of the wall and/or continuous insulation is added to the outside of the wall. Adjustments for additional layers shall follow the procedure of Equation 4-4 and Equation 4-5.

Assumptions. U-factors include an inside air film of 0.68 and an exterior air film of 0.17. Conductivity of the concrete is assumed to be 0.215 Btu/h-ºF-f, density is 150 lb/ft³, the thickness of each side of the sandwich panel is 0.5 ft. The data was calculated by Construction Technologies Laboratories, Inc. and published in the Thermal Mass Handbook, Concrete and Masonry Design Provisions Using ASHRAE/IESNA 90.1-1989, National Codes and Standards Council of the Concrete and Masonry Industries, 1994.

Table 4.3.8 – U-factors for Spandrel Panels and Glass Curtain Walls

			Rated R-value of Insulation between Framing Members							
			None	**R-4**	**R-7**	**R-10**	**R-15**	**R-20**	**R-25**	**R-30**
Frame Type	**Spandrel Panel**		**A**	**B**	**C**	**D**	**E**	**F**	**G**	**H**
Aluminum without Thermal Break	Single glass pane, stone, or metal panel	**1**	0.361	0.248	0.229	0.219	0.210	0.206	0.203	0.201
	Double glass with no low-e coatings	**2**	0.301	0.239	0.224	0.216	0.209	0.205	0.202	0.200
	Triple or low-e glass	**3**	0.269	0.231	0.220	0.214	0.208	0.204	0.202	0.200
Aluminum with Thermal Break	Single glass pane, stone, or metal panel	**4**	0.351	0.215	0.191	0.179	0.168	0.161	0.158	0.155
	Double glass with no low-e coatings	**5**	0.280	0.204	0.186	0.175	0.166	0.160	0.157	0.154
	Triple or low-e glass	**6**	0.242	0.195	0.181	0.172	0.164	0.159	0.156	0.154
Structural Glazing	Single glass pane, stone, or metal panel	**7**	0.350	0.195	0.165	0.149	0.135	0.127	0.122	0.119
	Double glass with no low-e coatings	**8**	0.272	0.181	0.158	0.145	0.133	0.126	0.121	0.118
	Triple or low-e glass	**9**	0.227	0.169	0.152	0.141	0.131	0.124	0.120	0.117
No framing or Insulation is Continuous	Single glass pane, stone, or metal panel	**10**	0.361	0.148	0.102	0.078	0.056	0.044	0.036	0.031
	Double glass with no low-e coatings	**11**	0.301	0.137	0.097	0.075	0.055	0.043	0.035	0.030
	Triple or low-e glass	**12**	0.269	0.130	0.039	0.073	0.053	0.042	0.035	0.030

This table has U-factors for the spandrel section of glass and other curtain wall systems. Design factors that affect performance are the type of framing, the type of spandrel panel and the R-value of insulation.

Four framing conditions are considered in the table. The first is the common case where standard aluminum mullions are used. Standard mullions provide a thermal bridge through the insulation, reducing its effectiveness. The second case is for metal framing members that have a thermal break. A thermal break frame uses a urethane or other non-metallic element to separate the metal exposed to outside conditions from the metal that is exposed to interior conditions. The third case is for structural glazing or systems where there is no exposed mullion on the interior. The fourth case is for the condition where there is no framing or the insulation is continuous and uninterrupted by framing. The columns in the table can be used for any specified level of insulation between framing members installed in framed curtain walls or spandrel panels.

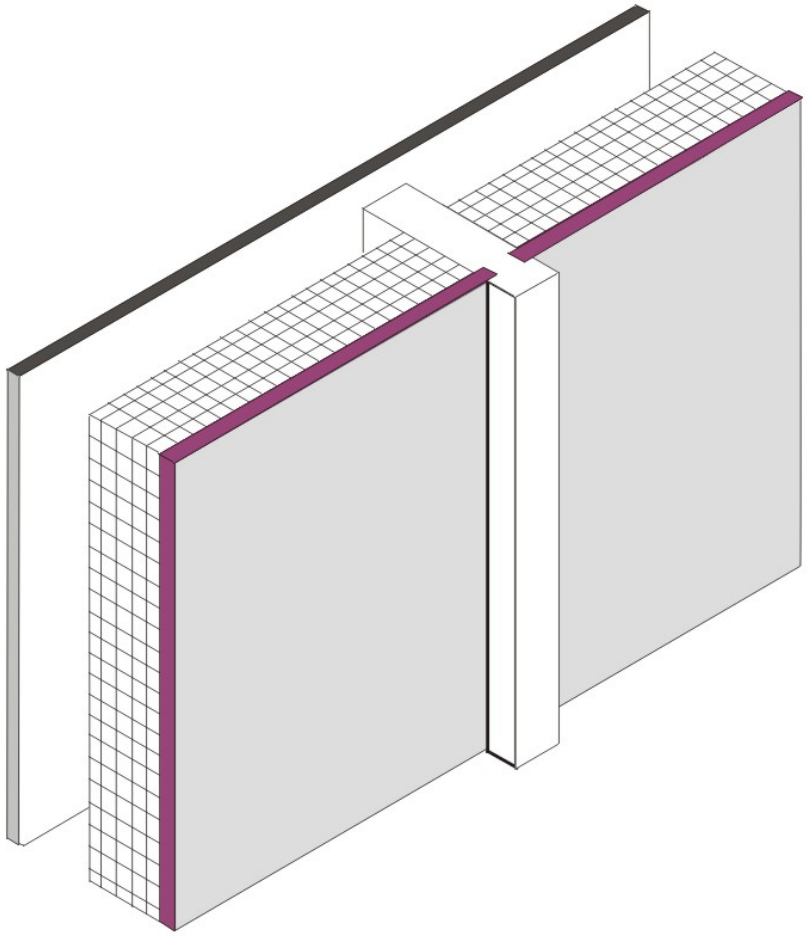

Figure 4.3.8 – Spandrel Panel

There are three spandrel panel cases considered in the table. The first is for a panel that provides little or no insulating value. This includes single pane glass, stone veneer, metal panels, or pre-case concrete less than 2 inches thick. The second case is for insulating glass. Sometimes insulating glass is used so that the spandrel panel looks similar to the vision glass. The third case is for triple glass or double glass that has a low-e coating.

Insulation levels are shown in the columns of the table. When the table is used manually, the R-value of insulation shall be equal to or greater than the R-value published in the columns. No interpolation is permitted when data from the table is selected manually. California Energy Commission approved Alternative Calculation Methods, including those used for prescriptive compliance, may accurately account for any amount of continuous insulation or for unusual construction assemblies using Equation 4-1 and Equation 4-2. If the curtain wall has an insulated metal-framed wall on the inside, then values from this table may be combined with values from Table 4.3.4 or Table 4.3.13 using the procedures of Equation 4-2 or Equation 4-3.

Assumptions. The U-factors in Table 4.3.8 were derived from a regression analysis of the values for “Glass Only Center of Glass” and “Curtain Wall” in the 2005 ASHRAE Handbook of Fundamentals, Chapter 30, Table 4. The U-factors in Table 4.3.8 include an exterior air film with an R-value of 0.17 and an interior air film R-value of 0.68, which are accounted for in the values from the 2005 ASHRAE Handbook of Fundamentals. The construction assembly consists of the Frame Type and Spandrel Panel combinations listed in Table 4.3.8, an air gap with an R-value of 1.39 (3/4 inch gap, 50 ºF mean temperature and 30 ºF temperature difference), and 5/8 inch gypsum board with an R-value of 0.56 that provides the interior finish. The gypsum board is assumed to span between the window sill and a channel at the floor.

The following equations were used when no rigid insulation is added to the assembly.

Aluminum Without Thermal Break

$$U_{Overall} = \frac{1}{\left(R_{Gypsum} + R_{AirGap}\right) + \left(\frac{1}{0.3007 + 0.8882 \times U_{CenterofGlass}}\right)}$$ Equation 4-6

Aluminum With Thermal Break

$$U_{Overall} = \frac{1}{\left(R_{Gypsum} + R_{AirGap}\right) + \left(\frac{1}{0.1936 + 0.8814 \times U_{CenterofGlass}}\right)}$$ Equation 4-7

Structural Glazing

$$U_{Overall} = \frac{1}{\left(R_{Gypsum} + R_{AirGap}\right) + \left(\frac{1}{0.1238 + 0.9448 \times U_{CenterofGlass}}\right)}$$ Equation 4-8

The following equations were used when rigid insulation is added to the assembly.

Aluminum Without Thermal Break

$$U_{Overall} = \frac{1}{\left(R_{Gypsum} + R_{AirGap}\right) + \left(\frac{1}{0.3007 + 0.8882 \times \left(\left(\frac{1}{R_{AddedInsulation}}\right) + U_{CenterofGlass}\right)}\right)}$$ Equation 4-9

Aluminum With Thermal Break

$$U_{Overall} = \frac{1}{\left(R_{Gypsum} + R_{AirGap}\right) + \left(\frac{1}{0.1936 + 0.8814 \times \left(\left(\frac{1}{R_{AddedInsulation}}\right) + U_{CenterofGlass}\right)}\right)}$$ Equation 4-10

Structural Glazing

$$U_{Overall} = \frac{1}{\left(R_{Gypsum} + R_{AirGap}\right) + \left(\frac{1}{0.1238 + 0.9448 \times \left(\left(\frac{1}{R_{AddedInsulation}}\right) + U_{CenterofGlass}\right)}\right)}$$ Equation 4-11

Table 4.3.9 – U-factors for Metal Building Walls

Insulation System	Rated R-Value of Insulation		Continuous Rigid Insulation							
			None	R-2	R-4	R-6	R-7	R-8	R-10	R-14
			A	B	C	D	E	F	G	H
Single Layer of Batt Insulation	None	1	1.18	0.351	0.206	0.146	0.127	0.113	0.092	0.067
	R-6	2	0.184	0.135	0.106	0.087	0.080	0.074	0.065	0.051
	R-10	3	0.134	0.106	0.087	0.074	0.069	0.065	0.057	0.047
	R-11	4	0.123	0.099	0.082	0.071	0.066	0.062	0.055	0.045
	R-13	5	0.113	0.092	0.078	0.067	0.063	0.059	0.053	0.044
Double Layer of Batt Insulation	R-6 + R-13	6	0.07	0.061	0.055	0.049	0.047	0.045	0.041	0.035
	R-10 + R-13	7	0.061	0.054	0.049	0.045	0.043	0.041	0.038	0.033
	R-13 + R-13	8	0.057	0.051	0.046	0.042	0.041	0.039	0.036	0.032
	R-19 + R-13	9	0.048	0.044	0.040	0.037	0.036	0.035	0.032	0.029

Double layer or batt insulation may not be able to have Continuous rigid insulation added.

The U-factors in this table are intended for use with metal building walls. This type of construction is typical for manufacturing and warehouse facilities, but is used for other building types as well. The typical method of insulating this type of building is to stretch vinyl backed fiberglass insulation over the metal girts before the metal siding is attached with metal screws. With this method, the insulation is compressed at each girt, reducing its effectiveness. The first part of the table contains values for this insulation technique. The second section of the table has data for systems that have two layers of insulation. In this section layers are listed from inside to outside.

For the majority of cases, values will be selected from column A of this table. Builders or designers may increase thermal performance by adding a rigid continuous insulation layer between the metal siding and the structural supports. When this table is used manually, the R-value of continuous insulation shall be equal to or greater than the R-value published in the continuous insulation columns. No interpolation is permitted when data from the table is used manually. CEC approved compliance software, however, may determine the U-factor for any amount of continuous insulation using Equation 4-1.

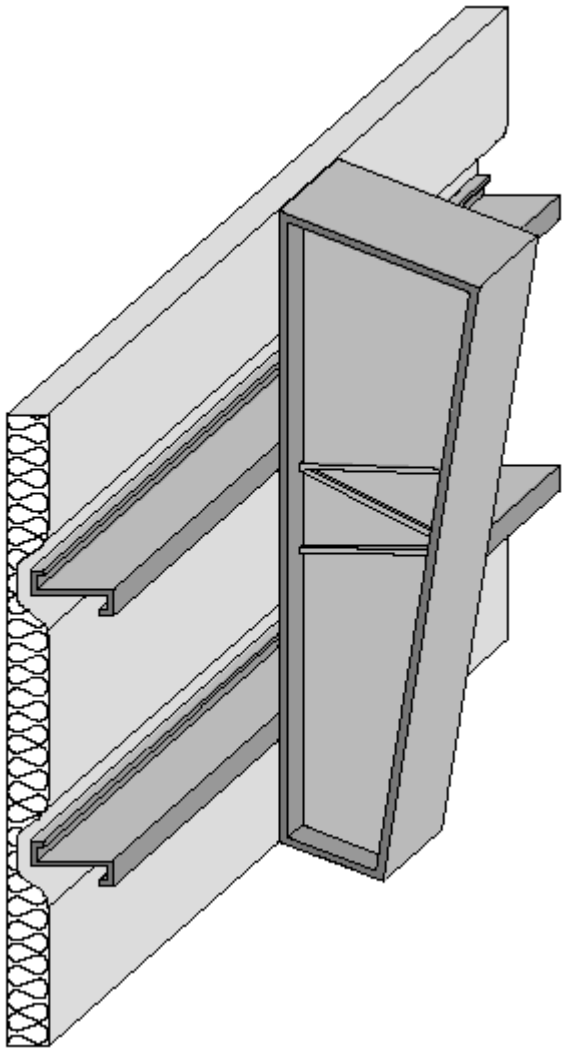

Figure 4.3.9 – Metal Building Wall

Assumptions: Data in Column A of this table is taken from the ASHRAE/IESNA Standard 90.1-2004, Appendix A. The data in columns beyond A are calculated using Equation 4-1.

Table 4.3.10 – U-factors for Insulated Metal Panel Walls

		U-factor (Btu/^{0}F-ft^2)
Panel Thickness		**A**
2”	**1**	0.078
2 ½”	**2**	0.063
3”	**3**	0.053
4”	**4**	0.041
5”	**5**	0.033
6”	**6**	0.027

This table contains thermal performance data (U-factors) for foamed-in-place, insulated metal panels consisting of liquid polyurethane or polyisocyanurate injected between metal skins in individual molds or on fully automated production lines. Metal building construction is the most common application for this product where the metal panel is fastened to the frame of the structure. This table can only be used for insulated panels that are factory built. This table does not apply to panels that utilize polystyrene, or to field applied products such as spray applied insulations.

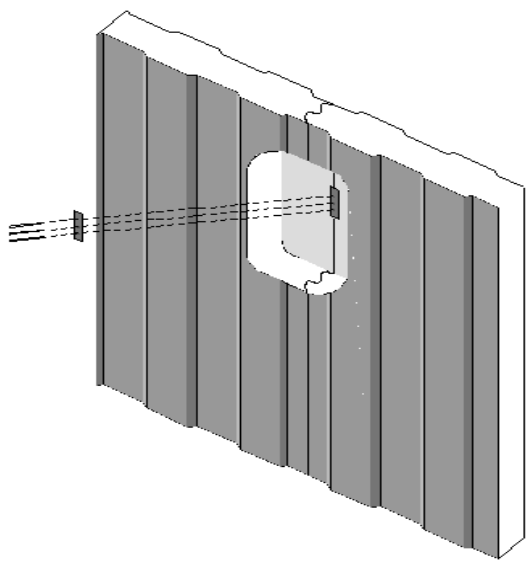

Figure 4.3.10 –Insulated Metal Panel Walls

Assumptions. These data are calculated using the parallel path method documented in the 2005 ASHRAE Handbook of Fundamentals. These calculations assume an exterior air film of R-0.17, light gauge metal exterior of 0.0747 inch thickness, continuous insulation R-5.9 per inch, light gauge metal interior of 0.0747 inche thickness, interior air film (heat flow horizontal) of R-0.68. The panels are assumed to be continuous with no framing penetration. The R-value of the metal is negligible.

Table 4.3.11 – Thermal Properties of Log Home Walls

		U-factor	Heat Capacity (HC)
Log Diameter		A	
6”	**1**	0.133	4.04
8”	**2**	0.102	6.06
10”	**3**	0.083	6.73
12”	**4**	0.070	8.08
14”	**5**	0.060	9.42
16”	**6**	0.053	10.77

This table has U-factors and heat capacity data for log homes Data is provided for logs in six thicknesses ranging from 6 in. to 16 in. If other thermal properties are needed such as density, weight, conductivity, etc., use the procedures in Modeling Constructions in the Nonresidential ACM contained at the end of this ACM Joint Appendix 4. CEC approved ACMs may adjust the data for interior furring using data from Table 4.3.13 and the procedure from Equation 4-2.

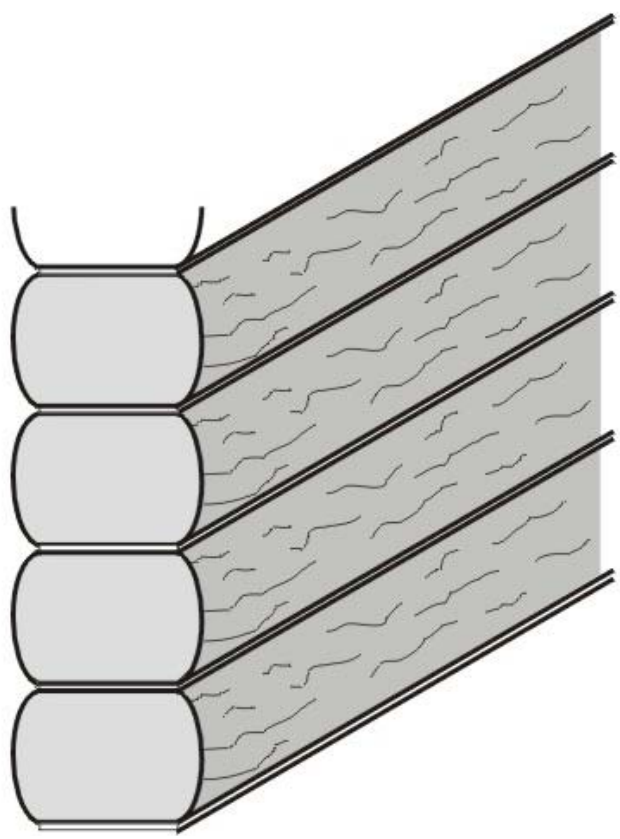

Figure 4.3.11 – Log Home Walls

Assumptions: Calculations are based on ASHRAE series method of calculation, 2005 ASHRAE Handbook of Fundamentals. Values assume a log R-value of R-1.25/inch, an average wall thickness of 90% of the log diameter, an interior air film of R-0.68 and an exterior air film of R-0.17. Values do not account for presence of windows or doors. Construction assumes no additional siding or insulation. Heat Capacity is based on a hardwood density of 26.6 lb/ft^3 and a specific heat of 0.39 Btu/lb-ºF. An exterior air film of R-0.17 and an interior film of R-0.68 are assumed.

Table 4.3.12 – Thermal and Mass Properties of Straw Bale Walls

		A
R-value	1	30
U-factor		0.033
Heat CapacityBtu/ft^2*°F]		2.24

This table has data that may be used for straw bale construction. This is an alternative construction technique used in some rural areas. The technique is not commonly used for production homes.

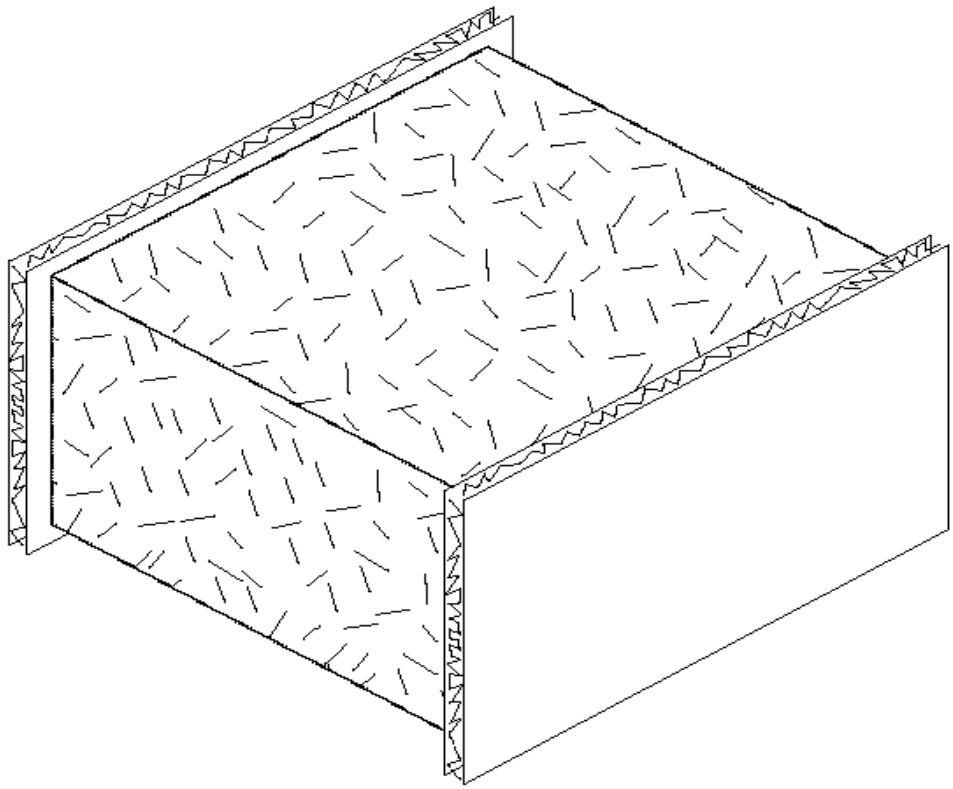

Figure 4.3.12 – Straw Bale Wall

Assumptions. The construction consists of an exterior film of R-0.17, stucco and lath of R-0.18, the straw bale, interior plaster of R-0.47, and an interior air film of 0.68. Straw bale must have a minimum cross section of 22 inch by 16 inch, and shall have a thermal resistance of R-30, whether stacked so the walls are 23 inch wide or 16 inch wide. Due to the higher resistance to heat flow across the grain of the straws, a bale laid on edge with a nominal 16 inch horizontal thickness has the same R-value (R-30) as a bale laid flat. Framing is assumed to not penetrate more than 25 percent of the way through the straw bale.

Table 4.3.13 – Effective R-values for Interior or Exterior Insulation Layers

			R-value of Insulation Installed in Furring Space																					
			0	1	2	3	4	5	6	7	8	9	10	11	12	13	14	15	16	17	18	19	20	21
Thick-ness	Frame Type		A	B	C	D	E	F	G	H	I	J	K	L	M	N	O	P	Q	R	S	T	U	V
Any	None	1	0.5	1.5	2.5	3.5	4.5	5.5	6.5	7.5	8.5	9.5	10.5	11.5	12.5	13.5	14.5	15.5	16.5	17.5	18.5	19.5	20.5	21.5
0.5"	Wood	2	1.3	1.3	1.9	2.4	2.7	n.a.	n.a.	n.a.	n.a.	n.a.	n.a.	n.a.	n.a.	n.a.	n.a.	n.a.	n.a.	n.a.	n.a.	n.a.	n.a.	n.a.
	Metal	3	0.9	0.9	1.1	1.1	1.2	n.a.	n.a.	n.a.	n.a.	n.a.	n.a.	n.a.	n.a.	n.a.	n.a.	n.a.	n.a.	n.a.	n.a.	n.a.	n.a.	n.a.
0.75"	Wood	4	1.4	1.4	2.1	2.7	3.1	3.5	3.8	n.a.	n.a.	n.a.	n.a.	n.a.	n.a.	n.a.	n.a.	n.a.	n.a.	n.a.	n.a.	n.a.	n.a.	n.a.
	Metal	5	1.0	1.0	1.3	1.4	1.5	1.5	1.6	n.a.	n.a.	n.a.	n.a.	n.a.	n.a.	n.a.	n.a.	n.a.	n.a.	n.a.	n.a.	n.a.	n.a.	n.a.
1.0"	Wood	6	1.3	1.5	2.2	2.9	3.4	3.9	4.3	4.6	4.9	n.a.	n.a.	n.a.	n.a.	n.a.	n.a.	n.a.	n.a.	n.a.	n.a.	n.a.	n.a.	n.a.
	Metal	7	1.0	1.1	1.4	1.6	1.7	1.8	1.8	1.9	1.9	n.a.	n.a.	n.a.	n.a.	n.a.	n.a.	n.a.	n.a.	n.a.	n.a.	n.a.	n.a.	n.a.
1.5"	Wood	8	1.3	1.5	2.4	3.1	3.8	4.4	4.9	5.4	5.8	6.2	6.5	6.8	7.1	n.a.	n.a.	n.a.	n.a.	n.a.	n.a.	n.a.	n.a.	n.a.
	Metal	9	1.1	1.2	1.6	1.9	2.1	2.2	2.3	2.4	2.5	2.5	2.6	2.6	2.7	n.a.	n.a.	n.a.	n.a.	n.a.	n.a.	n.a.	n.a.	n.a.
2"	Wood	10	1.4	1.5	2.5	3.3	4.0	4.7	5.3	5.9	6.4	6.9	7.3	7.7	8.1	8.4	8.7	9.0	9.3	n.a.	n.a.	n.a.	n.a.	n.a.
	Metal	11	1.1	1.2	1.7	2.1	2.3	2.5	2.7	2.8	2.9	3.0	3.1	3.2	3.2	3.3	3.3	3.4	3.4	n.a.	n.a.	n.a.	n.a.	n.a.
2.5"	Wood	12	1.4	1.5	2.5	3.4	4.2	4.9	5.6	6.3	6.8	7.4	7.9	8.4	8.8	9.2	9.6	10.0	10.3	10.6	10.9	11.2	11.5	n.a.
	Metal	13	1.2	1.3	1.8	2.3	2.6	2.8	3.0	3.2	3.3	3.5	3.6	3.6	3.7	3.8	3.9	3.9	4.0	4.0	4.1	4.1	4.1	n.a.
3"	Wood	14	1.4	1.5	2.5	3.5	4.3	5.1	5.8	6.5	7.2	7.8	8.3	8.9	9.4	9.9	10.3	10.7	11.1	11.5	11.9	12.2	12.5	12.9
	Metal	15	1.2	1.3	1.9	2.4	2.8	3.1	3.3	3.5	3.7	3.8	4.0	4.1	4.2	4.3	4.4	4.4	4.5	4.6	4.6	4.7	4.7	4.8
3.5"	Wood	16	1.4	1.5	2.6	3.5	4.4	5.2	6.0	6.7	7.4	8.1	8.7	9.3	9.8	10.4	10.9	11.3	11.8	12.2	12.6	13.0	13.4	13.8
	Metal	17	1.2	1.3	2.0	2.5	2.9	3.2	3.5	3.8	4.0	4.2	4.3	4.5	4.6	4.7	4.8	4.9	5.0	5.1	5.1	5.2	5.2	5.3
4"	Wood	18	1.4	1.6	2.6	3.6	4.5	5.3	6.1	6.9	7.6	8.3	9.0	9.6	10.2	10.8	11.3	11.9	12.4	12.8	13.3	13.7	14.2	14.6
	Metal	19	1.2	1.3	2.0	2.6	3.0	3.4	3.7	4.0	4.2	4.5	4.6	4.8	5.0	5.1	5.2	5.3	5.4	5.5	5.6	5.7	5.8	5.8
4.5"	Wood	20	1.4	1.6	2.6	3.6	4.5	5.4	6.2	7.1	7.8	8.5	9.2	9.9	10.5	11.2	11.7	12.3	12.8	13.3	13.8	14.3	14.8	15.2
	Metal	21	1.2	1.3	2.1	2.6	3.1	3.5	3.9	4.2	4.5	4.7	4.9	5.1	5.3	5.4	5.6	5.7	5.8	5.9	6.0	6.1	6.2	6.3
5"	Wood	22	1.4	1.6	2.6	3.6	4.6	5.5	6.3	7.2	8	8.7	9.4	10.1	10.8	11.5	12.1	12.7	13.2	13.8	14.3	14.8	15.3	15.8
	Metal	23	1.2	1.4	2.1	2.7	3.2	3.7	4.1	4.4	4.7	5.0	5.2	5.4	5.6	5.8	5.9	6.1	6.2	6.3	6.5	6.6	6.7	6.8
5.5"	Wood	24	1.4	1.6	2.6	3.6	4.6	5.5	6.4	7.3	8.1	8.9	9.6	10.3	11.0	11.7	12.4	13.0	13.6	14.2	14.7	15.3	15.8	16.3
	Metal	25	1.3	1.4	2.1	2.8	3.3	3.8	4.2	4.6	4.9	5.2	5.4	5.7	5.9	6.1	6.3	6.4	6.6	6.7	6.8	7.0	7.1	7.2
EIFS		26	0.0	1.0	2.0	3.0	4.0	5.0	6.0	7.0	8.0	9.0	10.0	11.0	12.0	13.0	14.0	15.0	16.0	17.0	18.0	19.0	20.0	21.0

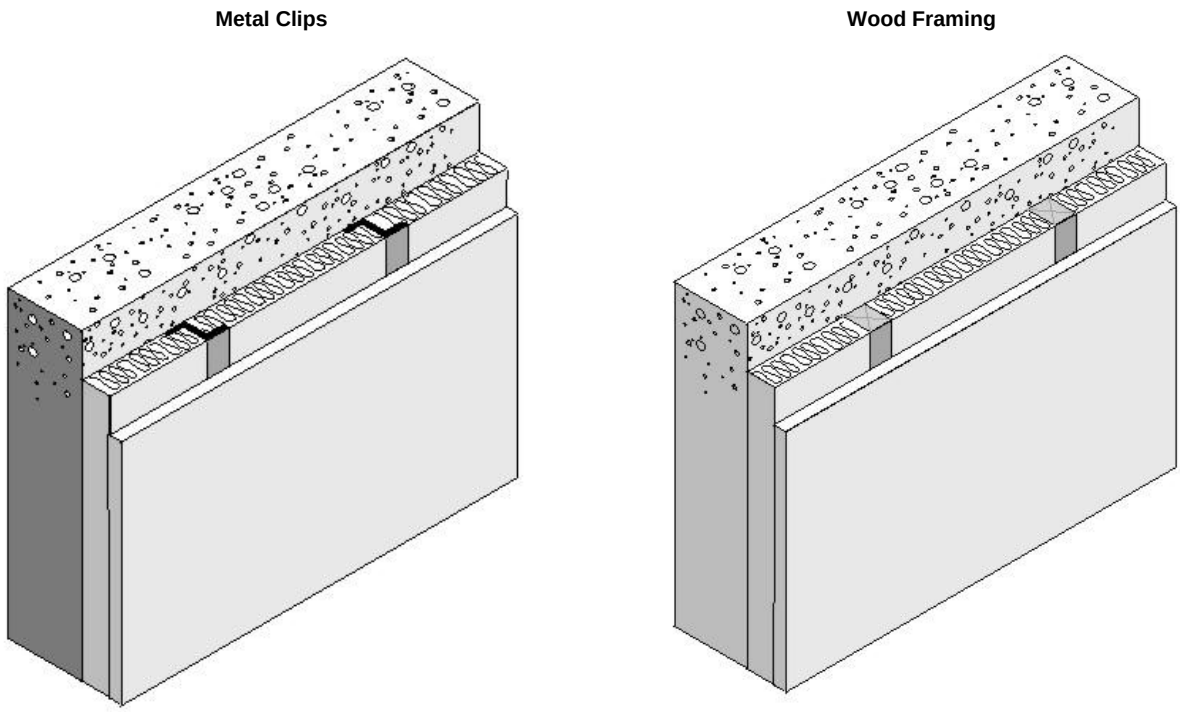

Figure 4.3.13 – Interior or Exterior Insulation Layers

This table is used in combination with other tables and Equation 4-1 and Equation 4-2 to account for interior furring and continuous insulation added to other constructions. .

Assumptions. Data is taken from ASHRAE/IESNA Standard 90.1-2004 All furring thickness values given are actual dimensions. All values include 0.5 inch gypsum board on the inner surface, interior surface resistances not included. The metal furring is 24 inch on center, 24 guage, Z-type Metal Furring. The wood furring is 24 inch on center, Douglas-Fir Larch Wood Furring, density = 34.9 lb/ft^3. Insulation assumed to fill the furring space.

4.4 Floors and Slabs

Table 4.4.1 – Standard U-factors for Wood-Framed Floors with a Crawl Space

Framing Spacing	Nominal Framing Size	R-Value Cavity Insul.		Rated R-value of Continuous Insulation							
				R-0	R-2	R-4	R-6	R-7	R-8	R-10	R-14
				A	B	C	D	E	F	G	H
16 in. OC	Any	None	1	0.097	0.081	0.070	0.061	0.058	0.055	0.049	0.041
	2 x 6	R-11	2	0.049	0.045	0.041	0.038	0.037	0.035	0.033	0.029
		R-13	3	0.046	0.042	0.039	0.036	0.035	0.033	0.031	0.028
	2 x 8	R-19	4	0.037	0.034	0.032	0.030	0.029	0.029	0.027	0.024
		R-22	5	0.034	0.032	0.030	0.028	0.027	0.027	0.025	0.023
	2 x 10	R-25	6	0.031	0.029	0.028	0.026	0.025	0.025	0.024	0.022
		R-30	7	0.028	0.026	0.025	0.024	0.023	0.023	0.022	0.020
	2 x 12	R-38	8	0.024	0.023	0.022	0.021	0.020	0.020	0.019	0.018
24 in. OC	Any	None	9	0.098	0.082	0.070	0.062	0.058	0.055	0.049	0.041
	2 x 6	R-11	10	0.049	0.045	0.041	0.038	0.036	0.035	0.033	0.029
		R-13	11	0.045	0.041	0.038	0.035	0.034	0.033	0.031	0.028
	2 x 8	R-19	12	0.036	0.034	0.032	0.030	0.029	0.028	0.027	0.024
		R-22	13	0.033	0.031	0.029	0.028	0.027	0.026	0.025	0.023
	2 x 10	R-25	14	0.030	0.029	0.027	0.026	0.025	0.024	0.023	0.021
		R-30	15	0.027	0.026	0.024	0.023	0.023	0.022	0.021	0.020
	2 x 12	R-38	16	0.023	0.022	0.021	0.020	0.020	0.020	0.019	0.017

Notes:

1. In order to use the U-factors listed in this section, exterior raised-floor insulation shall be installed between floor joists with a means of support that prevents the insulation from falling, sagging or deteriorating. Two approaches that accomplish this are:
2. Nailing insulation hangers 18 inches apart prior to rolling out the insulation. Hangers are heavy wires up to 48 inches long with pointed ends, which provide positive wood penetration.
3. Attaching wire mesh to form a basket between joists to support the insulation. Mesh is nailed or stapled to the underside of the joists.

This table contains U-factors for wood framed floors built over a ventilated crawlspace. This construction is common for low-rise residential buildings and for Type IV nonresidential buildings.

If continuous insulation is not used, then choices are made from Column A. In this case, the insulation is installed only between the framing members. Continuous insulation is not common for wood floors over a crawlspace, but if credit is taken, the insulation may be installed either above or below the framing members. The continuous insulation is typically a rigid polystyrene or polyisocyanurate foam insulation.

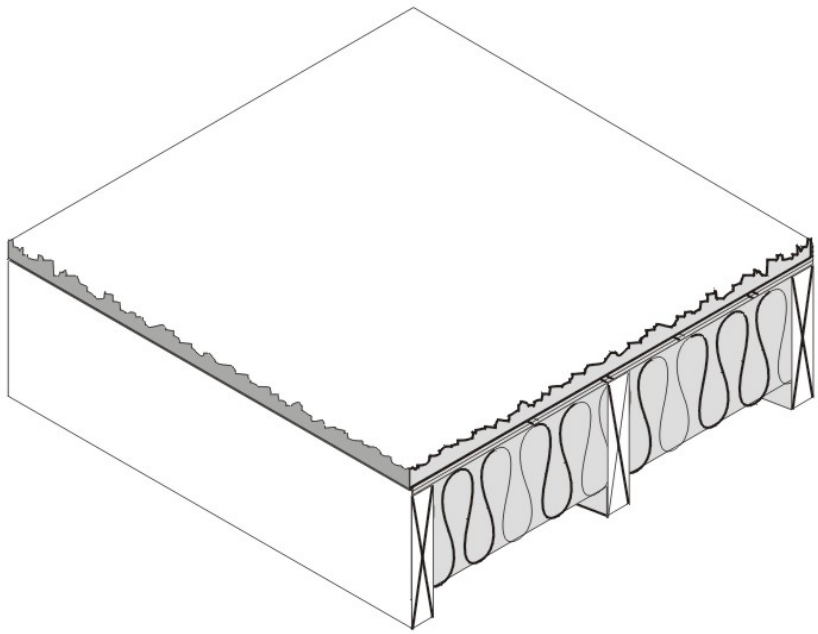

Figure 4.4.1 – Wood Framed Floor with a Crawl Space

When this table is used manually, the R-value of continuous insulation shall be equal to or greater than the R-value published in the continuous insulation columns. Continuous insulation of at least R-2 must exist in order to use columns B and beyond. No interpolation is permitted when data from the table is used manually. CEC approved compliance software, however, may determine the U-factor for any amount of continuous insulation or for unusual construction assemblies using Equation 4-1 and Equation 4-2.

If the crawlspace is not ventilated and is modeled as a controlled ventilation crawlspace (CVC), then values from this table shall not be used. Values from Table 4.21 shall be used instead and the crawlspace shall be modeled as a separate and unconditioned zone.

Assumptions: Calculations use the ASHRAE parallel heat flow method documented in the 2005 ASHRAE Handbook of Fundamentals. These calculations assume an exterior air film of R-0.17, a vented crawlspace for an effective R-6, a continuous insulation layer (if any), the insulation / framing layer, 5/8 inch wood based sheathing (Custom), carpet and pad of R-2.08 (CP01), and an interior air film (heat flow down) of R-0.92. The framing factor is assumed to be 10 percent for 16 inch stud spacing and 7 percent for 24 inch spacing.

Table 4.4.2 – Standard U-factors for Wood Framed Floors without a Crawl Space

Spacing	Nominal Framing Size	R-Value of Cavity Insul.		Rated R-value of Continuous Insulation							
				R-0	R-2	R-4	R-6	R-7	R-8	R-10	R-14
				A	B	C	D	E	F	G	H
16 in. OC	Any	None	**1**	0.238	0.161	0.122	0.098	0.089	0.082	0.070	0.055
	2 x 6	R-11	**2**	0.071	0.062	0.055	0.050	0.047	0.045	0.041	0.036
	(5.50 in)	R-13	**3**	0.064	0.057	0.051	0.046	0.044	0.042	0.039	0.034
	2 x 8	R-19	**4**	0.048	0.044	0.040	0.037	0.036	0.035	0.033	0.029
	(7.25 in.)	R-22	**5**	0.044	0.040	0.037	0.035	0.033	0.032	0.030	0.027
	2 x 10	R-25	**6**	0.039	0.036	0.034	0.031	0.030	0.030	0.028	0.025
	(9.25 in.)	R-30	**7**	0.034	0.032	0.030	0.028	0.028	0.027	0.025	0.023
	2 x 12 (11.25 in.)	R-38	**8**	0.029	0.027	0.026	0.024	0.024	0.023	0.022	0.020
24 in. OC	Any	None	**9**	0.243	0.163	0.123	0.099	0.090	0.083	0.071	0.055
	2 x 6	R-11	**10**	0.070	0.061	0.054	0.049	0.047	0.045	0.041	0.035
	(5.50 in.)	R-13	**11**	0.062	0.055	0.050	0.045	0.043	0.042	0.038	0.033
	2 x 8	R-19	**12**	0.047	0.043	0.039	0.037	0.035	0.034	0.032	0.028
	(7.25 in.)	R-22	**13**	0.042	0.039	0.036	0.034	0.033	0.032	0.030	0.026
	2 x 10	R-25	**14**	0.037	0.035	0.033	0.031	0.030	0.029	0.027	0.025
	(9.25 in.)	R-30	**15**	0.033	0.031	0.029	0.027	0.027	0.026	0.025	0.022
	2 x 12 (11.25 in.)	R-38	**16**	0.027	0.026	0.025	0.023	0.023	0.022	0.021	0.020

This table contains U-factors for wood framed floors that are exposed to ambient (outdoor) conditions. This construction is common for low-rise residential buildings and for Type 4 nonresidential buildings.

If continuous insulation is not used, then choices are made from Column A. In this case, the insulation is installed only between the framing members. If credit is taken for continuous insulation, the insulation may be installed either above or below the framing members.

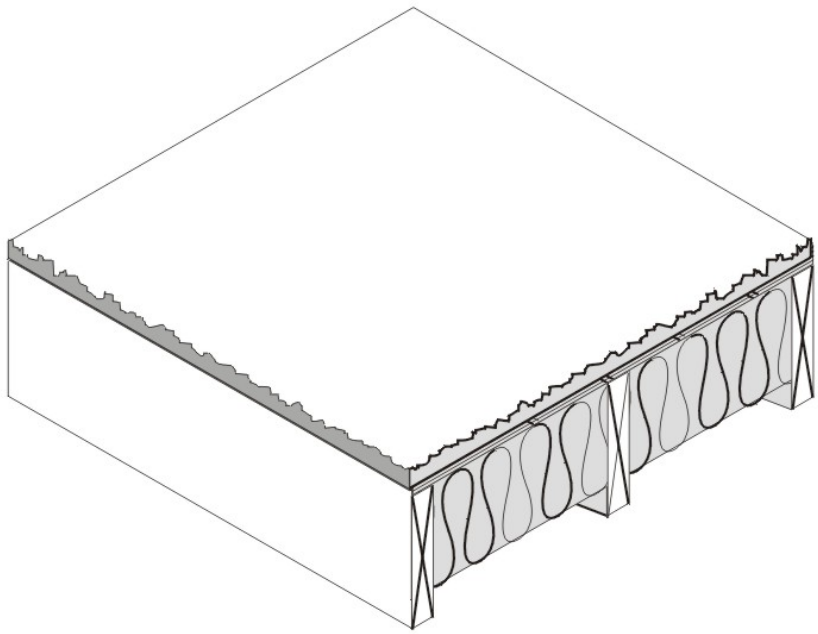

Figure 4.4.2 – Wood Framed Floor without a Crawl Space

When this table is used manually, the R-value of continuous insulation shall be equal to or greater than the R-value published in the continuous insulation columns. Continuous insulation of at least R-2 must exist in order to use data from columns B and beyond. No interpolation is permitted when data from the table is used manually. CEC approved software, however, may determine the U-factor for any amount of continuous insulation or for unusual construction assemblies using Equation 4-1 and Equation 4-2.

Assumptions: Calculations use the ASHRAE parallel heat flow method documented in the 2005 ASHRAE Handbook of Fundamentals. These calculations assume an exterior air film of R-0.17, a continuous insulation layer (if any), the cavity insulation / framing layer, 5/8 inch wood based sheathing (Custom), carpet and pad of R-2.08 (CP01), and an interior air film (heat flow down) of R-0.92.

Table 4.4.3 – Standard U-factors for Wood Foam Panel (SIP) Floors

				Rated R-value of Continuous Insulation [1]							
				None	R-2	R-4	R-6	R-7	R-8	R-10	R-14
Crawlspace	**Insulation R-value**	**Panel Thickness**		**A**	**B**	**C**	**D**	**E**	**F**	**G**	**H**
No	R-14	4 ½”	**1**	0.059	0.052	0.047	0.043	0.042	0.040	0.037	0.032
	R-22	6 ½”	**2**	0.042	0.038	0.036	0.033	0.032	0.031	0.029	0.026
	R-28	8 ¼”	**3**	0.033	0.031	0.029	0.028	0.027	0.026	0.025	0.023
	R-36	10 ¼”	**4**	0.027	0.026	0.024	0.023	0.023	0.022	0.021	0.020
Yes	R-14	4 ½”	**5**	0.043	0.040	0.037	0.034	0.033	0.032	0.030	0.027
	R-22	6 ½”	**6**	0.033	0.031	0.029	0.027	0.027	0.026	0.025	0.022
	R-28	8 ¼”	**7**	0.027	0.026	0.025	0.023	0.023	0.022	0.021	0.020
	R-36	10 ¼”	**8**	0.023	0.022	0.021	0.020	0.020	0.019	0.019	0.017

Notes:

[1] For credit, continuous insulation shall be at least R-2 and may be installed on either the inside or the exterior of the wall.

This table gives U-factors for structurally insulated panels used in floor construction. This is a construction system that consists of rigid foam insulation sandwiched between two layers of plywood or oriented strand board (OSB). For floors 2x wood spacers are assumed to separate the OSB panels and carry the floor load.

If continuous insulation is not used, then choices are made from Column A. When continuous insulation is also used, this is typically installed on the exterior side of the floor, but can also be used on the inside. The continuous insulation is typically a rigid polystyrene or polyisocyanurate foam insulation.

When this table is used manually, the R-value of continuous insulation shall be equal to or greater than the R-value published in the continuous insulation columns. Continuous insulation of at least R-2 must exist in order to use this table. CEC approved compliance software, however, may determine the U-factor for any amount of continuous insulation or for unusual construction assemblies using Equation 4-1 and Equation 4-2.

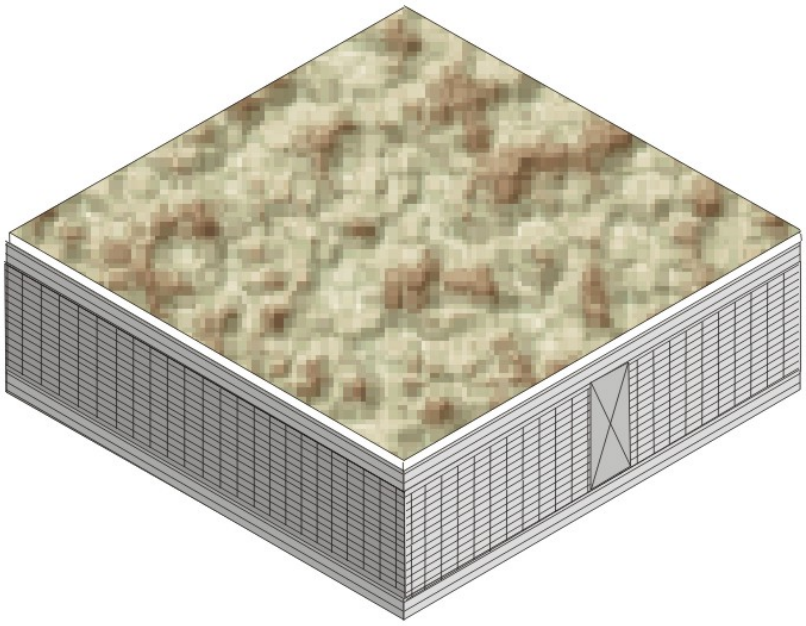

Figure 4.4.3 – Wood Foam Panel (SIP) Floor

Assumptions: These data are calculated using the parallel path method documented in the 2005 ASHRAE Handbook of Fundamentals. These calculations assume an exterior air film of R-0.17, a vented crawlspace with an effective R-6, 7/16 inch of OSB of R-0.44, the insulation / framing layer, 7/16 inch of OSB, carpet and pad of R-2.08 (CP01) and an interior air film (heat flow down) of R-0.92. Calculations assume a 2x framing spline every 4 foot on center. Framing section assumes an exterior air film of R-0.17, a vented crawlspace of R-6, 7/16 inch of OSB at R-0.44, 2x framing, 7/16 inch of OSB, carpet and pad of R-2.08 (CP01) and an interior air film of R-0.92.

Table 4.4.4 – Standard U-factors for Metal-Framed Floors with a Crawl Space

Framing Spacing	Nominal Framing Size	Cavity Insulation R-Value:		Rated R-value of Continuous Insulation							
				R-0	R-2	R-4	R-6	R-7	R-8	R-10	R-14
				A	B	C	D	E	ºF	G	H
16 in. OC	Any	None	1	0.094	0.079	0.068	0.060	0.057	0.054	0.048	0.041
	2 x 6	R-11	2	0.065	0.058	0.052	0.047	0.045	0.043	0.039	0.034
		R-13	3	0.063	0.056	0.050	0.046	0.044	0.042	0.039	0.033
		R-19	4	0.059	0.053	0.048	0.044	0.042	0.040	0.037	0.032
	2 x 8	R-19	5	0.058	0.052	0.047	0.043	0.041	0.040	0.037	0.032
		R-22	6	0.056	0.050	0.046	0.042	0.040	0.039	0.036	0.031
	2 x 10	R-30	7	0.051	0.046	0.042	0.039	0.038	0.036	0.034	0.030
	2 x 12	R-38	8	0.048	0.044	0.040	0.037	0.036	0.035	0.032	0.029
24 in. OC	Any	None	9	0.094	0.079	0.068	0.060	0.057	0.054	0.048	0.041
	2 x 6	R-11	10	0.061	0.054	0.049	0.045	0.043	0.041	0.038	0.033
		R-13	11	0.058	0.052	0.047	0.043	0.041	0.040	0.037	0.032
		R-19	12	0.053	0.048	0.044	0.040	0.039	0.037	0.035	0.030
	2 x 8	R-19	13	0.051	0.046	0.042	0.039	0.038	0.036	0.034	0.030
		R-22	14	0.049	0.045	0.041	0.038	0.036	0.035	0.033	0.029
	2 x 10	R-30	15	0.045	0.041	0.038	0.035	0.034	0.033	0.031	0.028
	2 x 12	R-38	16	0.041	0.038	0.035	0.033	0.032	0.031	0.029	0.026

Notes:

In order to use the U-factors listed in this table, exterior raised-floor insulation shall be installed between floor joists with a means of support that prevents the insulation from falling, sagging or deteriorating. Two approaches that accomplish this are:

- Attaching insulation hangers 18 inches apart prior to rolling out the insulation. Hangers are heavy wires up to 48 inches long with pointed ends.
- Attaching wire mesh to form a basket between joists to support the insulation. Mesh is nailed or stapled to the underside of the joists.

This table contains U-factors for metal-framed floors built over a crawlspace. The constructions represented are similar to those in Table 4.4.1, except that wood framing is replaced with metal framing. Cavity insulation is installed between the framing members. Since the steel is not as large a cross section as wood, the insulation needs to be wider than that used with wood to fit in between the steel framing members.

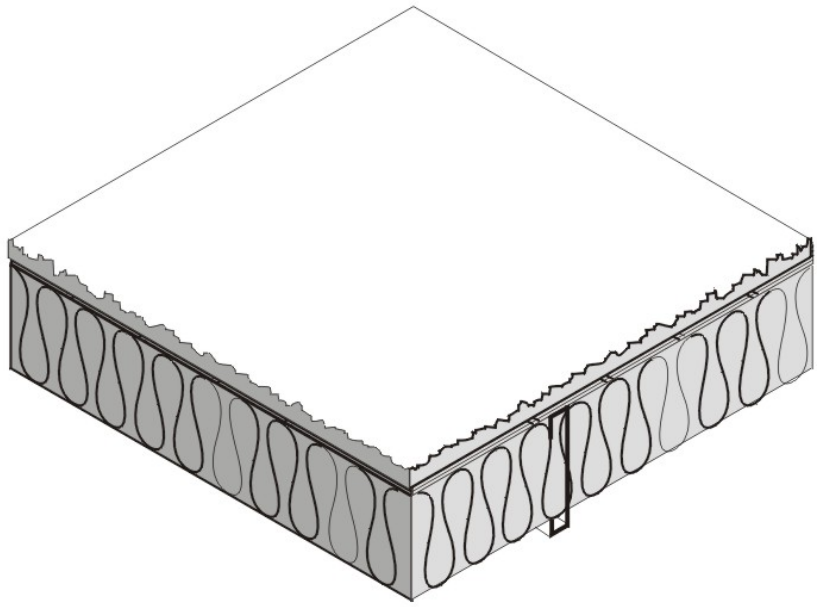

Figure 4.4.4 – Metal Framed Floors with a Crawl Space

For the majority of cases, values will be selected from column A of this table. Column A applies for the common situation where batt insulation is supported between framing members. Builders or designers may increase thermal performance by adding a continuous insulation layer either above or below the framing members.

When this table is used manually, the R-value of continuous insulation shall be equal to or greater than the R-value published in the continuous insulation columns. No interpolation is permitted when data from the table is used manually. CEC approved compliance software, however, may determine the U-factor for any amount of continuous insulation and for unusual construction layers using Equation 4-1 and Equation 4-2.

Assumptions: Calculations are based on the ASHRAE Zone Method Calculation, 2005 ASHRAE Handbook of Fundamentals These calculations assume an exterior air film of R-0.17, a vented crawlspace for an effective R-6, a continuous insulation layer (if any), the insulation / framing layer, 5/8 inch wood based sheathing (Custom), carpet and pad of R-2.08 (CP01), and an interior air film (heat flow down) of R-0.92. The effect of the crawlspace is approximated by an additional R-6 of insulation. The internal default framing percentages are 10 percent for 16 inch on center and 7 percent for 24 inch on center. Steel Framing has a 1.5 inch flange and is 0.075 inch thick steel (14 gauge) with no knockouts. U-factors are calculated using EZ frame 2.0B.

Table 4.4.5 – Standard U-factors for Metal-Framed Floors without a Crawl Space

				Rated R-value of Continuous Insulation							
				R-0	R-2	R-4	R-6	R-7	R-8	R-10	R-14
Spacing	**Nominal Framing Size**	**Cavity Insulation R-Value**		**A**	**B**	**C**	**D**	**E**	**F**	**G**	**H**
16 in. OC	Any	None	**1**	0.253	0.168	0.126	0.100	0.091	0.084	0.072	0.056
	2 x 6	R-11	**2**	0.108	0.089	0.075	0.066	0.062	0.058	0.052	0.043
		R-13	**3**	0.102	0.085	0.072	0.063	0.060	0.056	0.050	0.042
		R-19	**4**	0.092	0.078	0.067	0.059	0.056	0.053	0.048	0.040
	2 x 8	R-19	**5**	0.088	0.075	0.065	0.058	0.054	0.052	0.047	0.039
		R-22	**6**	0.085	0.073	0.063	0.056	0.053	0.051	0.046	0.039
	2 x 10	R-30	**7**	0.075	0.065	0.058	0.052	0.049	0.047	0.043	0.037
	2 x 12	R-38	**8**	0.068	0.060	0.053	0.048	0.046	0.044	0.040	0.035
24 in. OC	Any	None	**9**	0.253	0.168	0.126	0.100	0.091	0.084	0.072	0.056
	2 x 6	R-11	**10**	0.095	0.080	0.069	0.061	0.057	0.054	0.049	0.041
		R-13	**11**	0.087	0.074	0.065	0.057	0.054	0.051	0.047	0.039
		R-19	**12**	0.077	0.067	0.059	0.053	0.050	0.048	0.044	0.037
	2 x 8	R-19	**13**	0.074	0.064	0.057	0.051	0.049	0.046	0.043	0.036
		R-22	**14**	0.07	0.061	0.055	0.049	0.047	0.045	0.041	0.035
	2 x 10	R-30	**15**	0.061	0.054	0.049	0.045	0.043	0.041	0.038	0.033
	2 x 12	R-38	**16**	0.054	0.049	0.044	0.041	0.039	0.038	0.035	0.031

Notes:

In order to use the U-factors listed in this section, exterior raised-floor insulation shall be installed between floor joists with a means of support that prevents the insulation from falling, sagging or deteriorating. Two approaches that accomplish this are:

- Attaching insulation hangers 18 inches apart prior to rolling out the insulation. Hangers are heavy wires up to 48 inches long with pointed ends.
- Attaching wire mesh to form a basket between joists to support the insulation. Mesh is nailed or stapled to the underside of the joists.

This table contains U-factors for metal-framed floors built over outdoor conditions. For the majority of cases, values will be selected from column A of this table. Column A applies for the common situation where batt insulation is supported between framing members. Builders or designers may increase thermal performance by adding a continuous insulation layer either above or below the framing members.

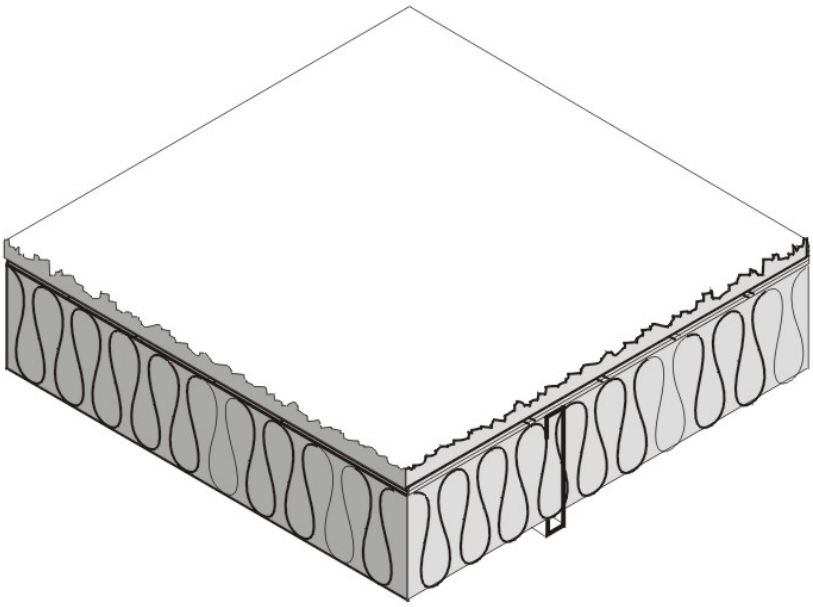

Figure 4.4.5 – Metal Framed Floors without a Crawl Space

When this table is used manually, the R-value of continuous insulation shall be equal to or greater than the R-value published in the continuous insulation columns. No interpolation is permitted when data from the table is used manually. CEC approved software, however, may determine the U-factor for any amount of continuous insulation and for unusual construction layers using Equation 4-1 and Equation 4-2.

Assumptions: Calculations are based on the ASHRAE Zone Method Calculation, 2005 ASHRAE Handbook of Fundamentals Handbook. These calculations assume an exterior air film of R-0.17, a continuous insulation layer (if any), the insulation / framing layer, 5/8 inch wood based sheathing (Custom), carpet and pad of R-2.08 (CP01), and an interior air film (heat flow down) of R-0.92. The internal default framing percentages are 10 percent for 16 inch on center and 7 percent for 24 inch on center. Steel Framing has a 1.5 inch flange and is 0.075 inch thick steel with no knockouts. U-factors calculated using EZ frame 2.0B.

Table 4.4.6 – Standard U-factors for Concrete Raised Floors

R-value of Insulation		Rated R-value of Continuous Insulation		
		Continuous Insulation Underneath	**Continuous Insulation Above Deck[1]** with no Sleepers	Continuous Insulation Above Deck[1] with Sleepers
		A	**B**	**C**
R-0	**1**	0.269	0.234	0.229
R-2	**2**	0.183	0.159	0.157
R-4	**3**	0.138	0.121	0.120
R-6	**4**	0.111	0.097	0.097
R-8	**5**	0.092	0.081	0.081
R-10	**6**	0.079	0.070	0.070
R-12	**7**	0.069	0.061	0.061
R-15	**8**	0.058	0.052	0.052
R-20	**9**	0.045	0.041	0.041
R-25	**10**	0.037	0.034	0.034
R-30	**11**	0.031	0.029	0.029

Notes:

[1] Above deck case includes a 5/8 inch layer of plywood between the insulation and the carpet and pad.

This table may be used only if the HC of the proposed design floor is greater than or equal to 7.0 Btu/ft²-ºF.

Continuous Insulation Underneath

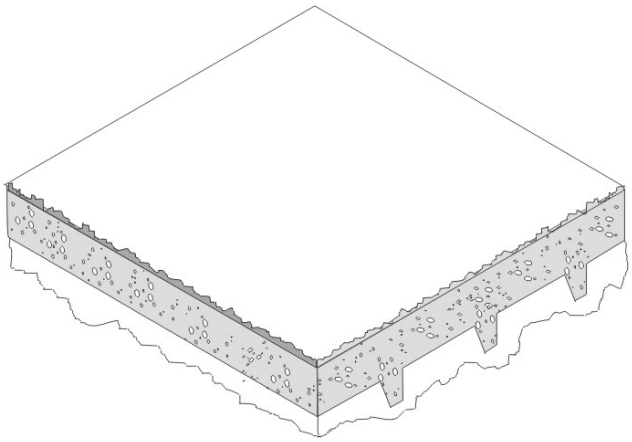

Continuous Insulation Above Deck

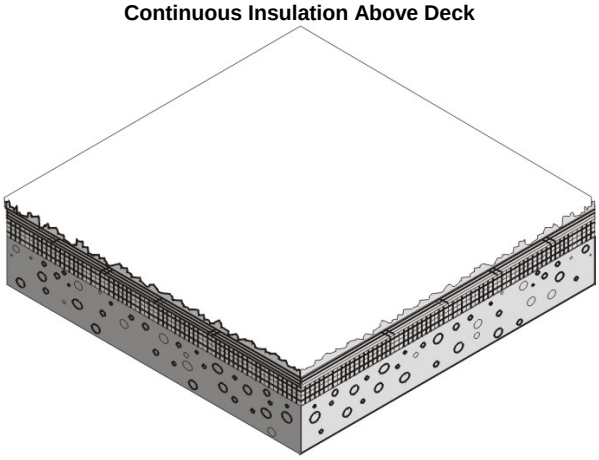

Figure 4.4.6 – Concrete Raised Floors

Assumptions: These calculations assume an exterior air film of R-0.17, a continuous insulation layer (if any), 4 inches of the lightweight concrete (CC14) over metal deck R-0, a continuous insulation layer (if any), 1.5 x 3.5 inch sleeper of R-0.99 per inch, R-0.80 air space between sleepers (2005 ASHRAE Handbook of Fundamentals, Chapter 25, Table 3), 5/8 inches of wood based sheathing (Custom) (if continuous insulation above deck), carpet and pad of R-2.08 (CP01), and an interior air film (heat flow down) of R-0.92. Sleepers have 10 percent framing factor. Below slab insulation assumes 6 inch wide beams 96 inches on center extending 8 inches below the slab.

Table 4.4.7 – F-Factors for Unheated Slab-on-Grade Floors

		Rated R-Value of Insulation												
Insulation Description		R-0	R-5	R-7.5	R-10	R-15	R-20	R-25	R-30	R-35	R-40	R-45	R-50	R-55
		A	**B**	**C**	**D**	**E**	**F**	**G**	**H**	**I**	**J**	**K**	**L**	**M**
None	**1**	0.73												
12 in. horizontal	**2**		0.72	0.71	0.71	0.71								
24 in. horizontal	**3**		0.70	0.70	0.70	0.69								
36 in. horizontal	**4**		0.68	0.67	0.66	0.66								
48 in. horizontal	**5**		0.67	0.65	0.64	0.63								
12 in. vertical	**6**		0.61	0.60	0.58	0.57	0.567	0.565	0.564					
24 in. vertical	**7**		0.58	0.56	0.54	0.52	0.510	0.505	0.502					
36 in. vertical	**8**		0.56	0.53	0.51	0.48	0.472	0.464	0.460					
48 in. vertical	**9**		0.54	0.51	0.48	0.45	0.434	0.424	0.419					
Fully insulated slab	**10**		0.46	0.41	0.36	0.30	0.261	0.233	0.213	0.198	0.186	0.176	0.168	0.161
Note: These values are used for slab edge conditions with and without carpet.														

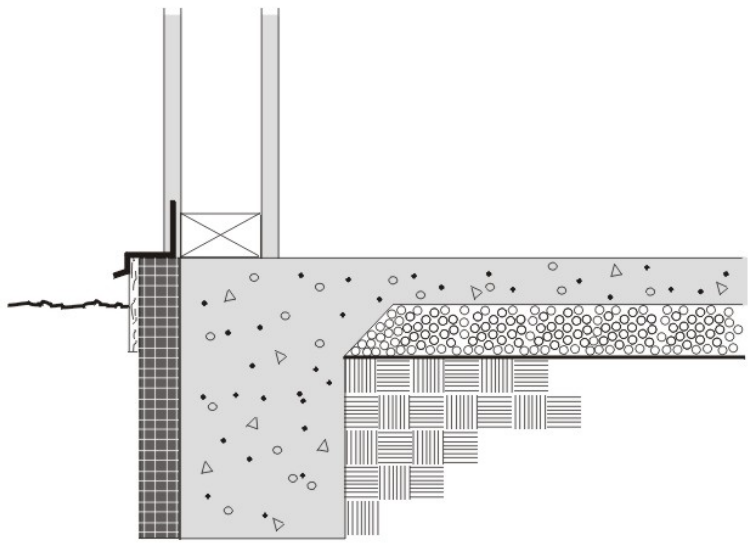

Figure 4.4.7 – Unheated Slab-on-Grade Floor

Horizontal insulation is continuous insulation that is applied directly to the underside of the slab and extends inward horizontally from the perimeter for the distance specified or continuous insulation that is applied downward from the top of the slab and then extends horizontally to the interior or the exterior from the perimeter for the distance specified. *Vertical insulation* is continuous insulation that is applied directly to the slab exterior, extending downward from the top of the slab for the distance specified. *Fully insulated slab* is continuous insulation that extends downward from the top to the slab and along the entire perimeter and completely covers the entire area under the slab.

Assumptions: Data of this table is taken from the ASHRAE/IESNA Standard 90.1-2004, Appendix A.

Table 4.4.8 – F-Factors for Heated Slab-on-Grade Floors

		Rated R-Value of Insulation												
		R-0	R-5	R-7.5	R-10	R-15	R-20	R-25	R-30	R-35	R-40	R-45	R-50	R-55
		A	B	C	D	E	F	G	H	I	J	K	L	M
None	**11**	1.35												
12 in. horizontal	**12**		1.31	1.31	1.30	1.30								
24 in. horizontal	**13**		1.28	1.27	1.26	1.25								
36 in. horizontal	**14**		1.24	1.21	1.20	1.18								
48 in. horizontal	**15**		1.20	1.17	1.13	1.11								
12 in. vertical	**16**		1.06	1.02	1.00	0.98	0.968	0.964	0.961					
24 in. vertical	**17**		0.99	0.95	0.90	0.86	0.843	0.832	0.827					
36 in. vertical	**18**		0.95	0.89	0.84	0.79	0.762	0.747	0.740					
48 in. vertical	**19**		0.91	0.85	0.78	0.72	0.688	0.671	0.659					
Fully insulated slab	**20**		0.74	0.64	0.55	0.44	0.373	0.326	0.296	0.273	0.255	0.239	0.227	0.217
Note: These values are used for slab edge conditions with and without carpet.														

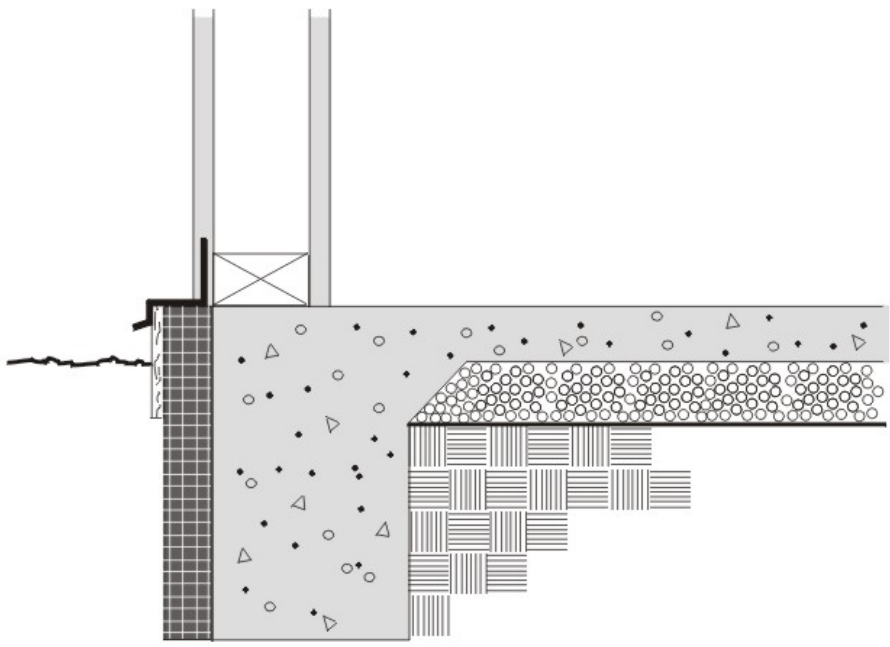

Figure 4.4.8 – Heated Slab-on-Grade Floor

Horizontal insulation is continuous insulation that is applied directly to the underside of the slab and extends inward horizontally from the perimeter for the distance specified or continuous insulation that is applied downward from the top of the slab and then extending horizontally to the interior or the exterior from the perimeter for the distance specified. *Vertical insulation* is continuous insulation that is applied directly to the slab exterior, extending downward from the top of the slab for the distance specified. *Fully insulated slab* is continuous insulation that extends downward from the top to the slab and along the entire perimeter and completely covers the entire area under the slab.

Assumptions: Data of this table is taken from the ASHRAE/IESNA Standard 90.1-2004, Appendix A.

4.5 Miscellaneous Construction

Table 4.5.1 – Opaque Doors

Description		U-factor (Btu/ºF-ft²)
		A
Uninsulated single-layer metal *swinging doors* or *non-swinging doors*, including single-layer uninsulated access hatches and uninsulated smoke vents:	**1**	1.45
Uninsulated double-layer metal *swinging doors* or *non-swinging doors*, including double-layer uninsulated access hatches and uninsulated smoke vents:	**2**	0.70
Insulated metal *swinging doors*, including fire-rated *doors*, insulated access hatches, and insulated smoke vents:	**3**	0.50
Wood *doors*, minimum nominal thickness of 1-3/4 in. (44 mm), including panel *doors* with minimum panel thickness of 1-1/8 in. (28 mm), and solid core flush *doors*, and hollow core flush *doors*:	**4**	0.50
Any other wood *door*:	**5**	0.60
Unisulated single layer metal *roll up doors* including fire rated *door*	**6**	1.45
Insulated single layer metal *sectional doors,* minimum insulation nominal thickness of 1-3/8 inch; expanded polystyrene (R-4 per inch).	**7**	0.179

Source: ASHRAE 90.1-2004, Section A7.

4.6 Modeling Constructions in the Nonresidential ACM

DOE-2.1e is the reference method for nonresidential compliance software. CALRES is the reference method for residential compliance software. These programs and other approved compliance software may require additional information on the physical properties of materials. With DOE-2, specifying the layers that make up the assembly and defining the fundamental thermal properties for each layer such as thickness, conductivity, density and specific heat may define construction assemblies. CALRES and its derivatives require density, conductivity and volumetric heat capacity and unit interior mass capacity (UIMC). These properties are related to each other so that if you know some of the properties you can calculate the others.

4.6.1 DOE-2 Material Codes

Notes to each of the tables in this joint appendix describe the layers that are used to determine the U-factors. The codes in parenthesis are a reference to the DOE-2 material codes used in the calculations. These codes along with other materials referenced in the notes are shown below. Some of the materials that are used in the standard construction assemblies are not listed as standard DOE-2 materials and in these cases, the "Code" column is shown as "Custom".

4.6.2 Framing/Insulation Layer

With the DOE-2 model, every layer is assumed to be homogeneous, while in reality this is not the case. Framed walls have a layer that includes the framing members with insulation placed between the members. With DOE-2, the layers specified in the footnotes shall be entered and the R-value of insulation/framing layer shall be back calculated to achieve the U-factor shown in the tables in this appendix. The insulation/framing layer shall be modeled with an R-value (no mass), as opposed to entering conductivity, specific heat, density and thickness for the framing layer.

4.6.3 Thermal Mass Properties

When U-factor, C-factor and HC are published, other thermal mass properties may be calculated using the rules described in Table 4.6.2.

4.6.4 Metal Buildings

Metal building walls and metal building roofs shall be modeled in the DOE-2 reference method as quick surfaces, e.g. thermal mass is not modeled. I these cases, no layers are specified, just the U-factor.

4.6.5 Slabs

For nonresidential buildings, slab edge conditions shall be modeled as 12 in. of concrete and 12 in. of earth, and a layer of insulation exterior to the earth that achieves the F-factors shown in Table 4.4.7 and Table 4.4.8.

Table 4.6.1 – Physical Properties of Materials

Code	Description	R-value	Thickness	Conductivity	Density	Specific Heat
AR02	Asphalt Shingle & Siding	0.44			70.0	0.35
BP01	Building Paper, Permeable Felt	0.06				
PW03	Plywood 1/2 in.	0.63	0.0417	0.0667	34.0	0.29
GP01	Gypsum Board 1/2 in.	0.45	0.0417	0.0926	50.0	0.26
BR01	Built-up Roofing 3/8 in.	0.33	0.0313	0.0939	70.0	0.35
PW05	Plywood 3/4 in.	0.94	0.0625	0.0667	34.0	0.29
PW04	Plywood 5/8 in.	0.78	0.0521	0.0667	34.0	0.29
CP01	Carpet with Fibrous Pad	2.08				0.34
PB01	Particle Board Low Density 3/4 in.	1.39	0.0625	0.0450	75.0	0.31
SC01	Stucco 1 in.	0.20	0.0833	0.4167	116.0	0.20
WD05	Wood, Soft 4 in.	5.00	0.3333	0.0667	32.0	0.33
WD11	Wood, Hard 3/4 in.	0.68	0.0625	0.0916	45.0	0.30
-CC03	Heavy Wt. Dried Aggregate 4 in.	0.44	0.3333	0.7576	140.0	0.20
CC14	Heavy Wt. Undried Aggregate 4 in.	0.32	0.3333	1.0417	140.0	0.20
AC02	1/2 in. Acoustic Tile	1.26	0.0417	0.0330	18.0	0.32
AL33	Air Layer 4 in. or more, Horizontal Roof	0.92	1.0000	0.4167	120.0	0.20
CP01	Carpet with Fibrous Pad	2.08				0.34
Custom	Concrete	0.11			144.0	0.20
Custom	Light weigt CMU	0.35			105.0	0.20
Custom	Medium Weigt CMU	0.35			115.0	0.20
Custom	Normal Weigt CMU	0.35			125.0	0.20
Custom	Earth (Soil)	3.00	1.5000	0.5000	85.0	0.20
Custom	Logs 6 in.	7.50	0.5000	0.0667	32.0	0.33
Custom	Logs 8 in.	10.00	0.6667	0.0667	32.0	0.33
Custom	Logs 10 in.	12.49	0.8333	0.0667	32.0	0.33
Custom	Logs 12 in.	14.99	1.0000	0.0667	32.0	0.33
Custom	Logs 14 in.	17.49	1.1667	0.0667	32.0	0.33
Custom	Logs 16 in.	19.99	1.3333	0.0667	32.0	0.33
Custom	Earth 12 in.	2.00	1.0000	0.5000	85.0	0.20
Custom	Vented crawspace	6.00	NA	NA	NA	NA
Custom	7/8" layer of stucco of R-0.18	0.18	0.0729	0.4167	116.0	0.20
Custom	Straw bale	30.00				
Custom	Acoustic tile + Metal	0.50	0.0417	0.0330	18.0	0.32
Custom	OSB 7/16 in.	0.44	0.4375	0.0667	34.0	0.29

Table 4.6.2 – Rules for Calculating Mass Thermal Properties From Published Values

Property	Units	Rule for Calculation
Heat Capacity (HC)	Btu/ºF-ft²	From Table 4.3.5, Table 4.3.6, or Table 4.3.7
U-factor	Btu/h-ºF-ft²	From Table 4.3.5, Table 4.3.6, or Table 4.14
C-factor	Btu/h-ºF-ft²	From Table 4.3.5, Table 4.3.6, or Table 4.3.7
Thickness (T)	Ft	From Table 4.3.5, Table 4.3.6, or Table 4.3.7
Specific Heat (SH)	Btu/ºF-lb	Assume that the specific heat of all concrete and masonry materials is 0.20 Btu/ºF-lb and that the specific heat of wood or straw (see Table 4.3.11 and Table 4.3.12) is 0.39 Btu/ºF-lb.
Weight (W)	lb/ft²	Divide the HC by the assumed specific heat. Wall weight is used with the low-rise residential standards to define a high mass wall.
Density (D)	lb/ft³	Multiply the weight (as calculated above) by the thickness (T)
Conductivity (C)	Btu/h-ºF-ft	Divide the published C-factor by the thickness (T). When only a U-factor is published, calculate the C-factor by assuming an exterior air film of 0.17 and an interior air film of 0.68.