AIR DISTRIBUTION DUCT LEAKAGE

CERTIFICATE OF ACCEPTANCE		NRCA-MCH-04-A
AIR DISTRIBUTION DUCT LEAKAGE		(Page 1 of 3)
Project Name:	Enforcement Agency:	Permit Number:
Project Address:	City:	Zip Code:

Note: Submit one Certificate of Acceptance for each system that must demonstrate compliance. HERS verification required.	Enforcement Agency Use: Checked by/Date

This form used for duct pressure test and to certify low leakage air handlers. Fill out the System Information in section A then determine if this is a New Duct System (fill out Section B), an Altered Space Conditioning System and/or Altered Duct System (fill out Section C), or if the compliance software requires Low Leakage Air-Handling Unit Verification (fill out Section E)

A. System Information

01	HVAC System Identification or Name:	
02	HVAC System Location or Area Served:	
03	Was Low Leakage Air-handling Unit Credit taken on MCH-01?	☐Yes/☐No
04	Duct System Construction Type:	
05	Condenser Nominal Cooling Capacity (ton)	
06	Heating Capacity (kBtu/h)	

B. Duct Leakage Diagnostic Test - New Duct System

A **New Duct System** is when at least 75 percent of the duct system is new duct material, and up to 25 percent may consist of reused parts from the dwelling unit's existing duct system (e.g., registers, grilles, boots, air handler, coil, plenums, duct material)

01	Air-Handler Airflow Determination Method (Tons or BTU)	
02	Calculated Target Allowable Duct Leakage Rate (cfm) a) For an air conditioner or heat pump use 400 cfm per rated ton of cooling capacity of outdoor condenser or package unit. Calculation = (0.06 x 400 x Tons _____) =_____cfm b) For heating-only system furnaces shall be based on 21.7 cfm per kBtu/hr of rated heating output capacity. Calculation = (0.06 x 21.7 x kBtu)/hr _____) = _____cfm	
03	Actual duct leakage rate from leakage test measurement (cfm)	
04	Compliance statement:	

Pass - Pass if B3 is less than or equal to B2.

C. Duct Leakage Diagnostic Test - Altered Space Conditioning System and/or Altered Duct System

Altered Space Conditioning System – is an HVAC changeout or when the air handler, condensing unit of a split system, our cooling coil or any amount of ducting added to an existing system but less than a new duct system.

01	Air-Handler Airflow Determination Method (Tons or BTU)	
02	Calculated Target Allowable Duct Leakage (cfm) a) For an air conditioner or heat pump use 400 cfm per rated ton of cooling capacity of outdoor condenser or a package unit. Calculation = (0.15 x 400 x Tons _____) =_____cfm b) For heating-only system furnaces shall be based on 21.7 cfm per kBtu/hr of rated heating output capacity. Calculation = (0.15 x 21.7 x kBtu/hr _____) =_____cfm	
03	Actual duct leakage rate from leakage test measurement (cfm)	
04	Compliance statement:	

Pass - Pass if C3 is less than or equal to C2, or

Fail but passed with Smoke – If unable to pass the leakage test a smoke test is allowed to confirm that all accessible leaks have been sealed. Enter actual leakage rate before moving to smoke. Fill out D Smoke Test below.

CERTIFICATE OF ACCEPTANCE		NRCA-MCH-04-A
AIR DISTRIBUTION DUCT LEAKAGE		(Page 2 of 3)
Project Name:	Enforcement Agency:	Permit Number:
Project Address:	City:	Zip Code:

D. Smoke Test		
01	Inject smoke into a fan pressurization device that is maintaining a duct pressure difference of 25 Pa (0.1 inches water) relative to the duct surroundings, with all grilles and registers in the duct system sealed.	
02	Compliance statement:	
Pass System passes if no smoke emanates from all accessible portions of the HVAC system including the package unit, furnace, ducts, plenums, wyes, tees. This includes the air handler refrigerant line, door panels, and curb. Accessible includes having access thereto, but which first may require removal or opening of access panels, doors, or similar obstructions including moving insulation. Requires 100% testing by HERS rater. No sampling allowed.		
03	Final Duct Leakage(CFM)	

E. Low Leakage Air-Handling Unit (LLAHU)		
01	Installed Air-Handling Unit Manufacturer Name	
02	Installed Air-Handling Unit Model Number	
03	The installed Low Leakage Air-handling Unit Model is listed here http://www.energy.ca.gov/title24/equipment_cert/llahu/low_leakage_air_handling_units.pdf	
04	Compliance statement:	
Pass if Manufacturer Name, Model Number of installed equipment is listed with the Energy Commission		

F. Additional Requirements for Compliance	
01	System was tested in its normal operation condition. (No temporary taping except for the damper used for outside air)
02	Building cavities for new ducting were not used as plenums or platform returns in lieu of ducts.
03	If cloth backed tape was used it was covered with Mastic and draw bands.
04	All connection points between the air handler and the supply and return plenums are completely sealed including at the curb.
05	Temporary Taping over registers to perform duct leakage test. When registers are installed in drywall tape covers register and drywall. For t-bar mounted registers taping of register can occur to the register or to the t-bar.
By signing this document I certify that all the above applicable requirements have been met.	

CERTIFICATE OF ACCEPTANCE	NRCA-MCH-04-A
AIR DISTRIBUTION DUCT LEAKAGE	(Page 3 of 3)

Project Name:	Enforcement Agency:	Permit Number:
Project Address:	City:	Zip Code:

DOCUMENTATION AUTHOR'S DECLARATION STATEMENT

1. I certify that this Certificate of Acceptance documentation is accurate and complete.

Documentation Author Name:	Documentation Author Signature:
Documentation Author Company Name:	Date Signed:
Address:	CEA/HERS/ATT Certification Identification (If applicable):
City/State/Zip:	Phone:

FIELD TECHNICIAN'S DECLARATION STATEMENT

I certify the following under penalty of perjury, under the laws of the State of California:

1. The information provided on this Certificate of Acceptance is true and correct.
2. I am the person who performed the acceptance verification reported on this Certificate of Acceptance (Field Technician).
3. The construction or installation identified on this Certificate of Acceptance complies with the applicable acceptance requirements indicated in the plans and specifications approved by the enforcement agency, and conforms to the applicable acceptance requirements and procedures specified in Reference Nonresidential Appendix NA7.
4. I have confirmed that the Certificate(s) of Installation for the construction or installation identified on this Certificate of Acceptance has been completed and signed by the responsible builder/installer and has been posted or made available with the building permit(s) issued for the building.

Field Technician Name:	Field Technician Signature:	
Field Technician Company Name:	Position with Company (Title):	
Address:	ATT Certification Identification (if applicable):	
City/State/Zip:	Phone:	Date Signed:

RESPONSIBLE PERSON'S DECLARATION STATEMENT

I certify the following under penalty of perjury, under the laws of the State of California:

1. I am the Field Technician, or the Field Technician is acting on my behalf as my employee or my agent and I have reviewed the information provided on this Certificate of Acceptance.
2. I am eligible under Division 3 of the Business and Professions Code in the applicable classification to accept responsibility for the system design, construction, or installation of features, materials, components, or manufactured devices for the scope of work identified on this Certificate of Acceptance, and attest to the declarations in this statement (responsible acceptance person).
3. The information provided on this Certificate of Acceptance substantiates that the construction or installation identified on this Certificate of Acceptance complies with the acceptance requirements indicated in the plans and specifications approved by the enforcement agency, and conforms to the applicable acceptance requirements and procedures specified in Reference Nonresidential Appendix NA7.
4. I understand that a HERS rater will check the installation to verify compliance, and that if such checking identifies defects the responsible builder/installer shall be required to take corrective action at his expense. I understand that Energy Commission and HERS Provider representatives will also perform quality assurance checking of installations, including those approved as part of a sample group but not checked by a HERS rater, and if those installations fail to meet the requirements of such quality assurance checking, the required corrective action and additional checking/testing of other installations in that HERS sample group will be performed at the responsible builder/installer's expense.
5. I have confirmed that the Certificate(s) of Installation for the construction or installation identified on this Certificate of Acceptance has been completed and is posted or made available with the building permit(s) issued for the building.
6. I will ensure that a completed, signed copy of this Certificate of Acceptance shall be posted, or made available with the building permit(s) issued for the building, and made available to the enforcement agency for all applicable inspections. I understand that a signed copy of this Certificate of Acceptance is required to be included with the documentation the builder provides to the building owner at occupancy.

Responsible Acceptance Person Name:	Responsible Acceptance Person Signature:	
Responsible Acceptance Person Company Name:	Position with Company (Title):	
Address:	CSLB License:	
City/State/Zip:	Phone:	Date Signed:

A. System Information

1. *HVAC System Identification or Name*: Provides an identification name or tag name that uniquely identifies the duct system. If there is a mechanical plan for the system, the tag name may be given on the plans.
2. *HVAC System Location or Area Served*: Provides a brief description of the area served by the duct system.
3. *Verified Low Leakage Air-handling Unit (VLLAHU) Credit*: Check Yes if Compliance Documentation for newly constructed buildings lists Low Leakage Air Handler Credit taken.
4. *Duct System Construction Type*: Choose from Completely New, Complete Replacement, or Alteration.
   a. Completely New System: For new buildings with a new HVAC system.
   b. Complete Replacement System: For existing buildings where a completely new duct system is installed (cut in) or 75 percent or more new duct material, and up to 25 percent may consist of reused parts from the dwelling unit's existing duct system (e.g., registers, grilles, boots, air handler, coil, plenums, duct material).
   c. Alteration: For existing buildings where ducting was added but less than Complete Replacement.
5. Enter the ton of condensing unit cooling capacity as specified by the manufacturer or NA if no air conditioning.
6. Enter the heat output of the in kBtu/hr

B. Duct Leakage Diagnostic Test - New Duct System

1. *Air-Handler Airflow Determination Method*: User will select from the following options:
   a. Cooling System Method: For systems with cooling, this selection must be made, and the nominal air handler airflow shall be 400 CFM per nominal ton of condensing unit cooling capacity as specified by the manufacturer.
   b. Heating System Method: For heating only systems the nominal air handler airflow shall be 21.7 CFM per kBtu/hr of rated heating output capacity.
2. *Calculated Target Allowable Duct Leakage Rate (cfm)*:

c) For an air conditioner or heat pump use 400 cfm per rated ton of cooling capacity of outdoor condenser or a package unit. Calculation - 0.06 x 400 x Tons _____ =_____cfm

d) Nominal air handler airflow for heating-only system furnaces shall be based on 21.7 cfm per kBtu/hr of rated heating output capacity. Calculation 0.06 x 21.7 x kBtu/hr _____=_____cfm

3. *Actual Duct Leakage Rate from Leakage Test Measurement (cfm)*: User will input this value from actual leakage test.
4. *Compliance Statement*: If Actual Duct Leakage Rate from leakage test (B3) is less than or equal to Calculated Target Allowable Duct Leakage Rate (B2) then test Passes.

C. Duct Leakage Diagnostic Test - Altered Space Conditioning System and/or Altered Duct System

1. *Air-Handler Airflow Determination Method*: User will select from the following options:
   a. Cooling System Method: For systems with cooling, this selection must be made, and the nominal air handler airflow shall be 400 CFM per nominal ton of condensing unit cooling capacity as specified by the manufacturer.
   b. Heating System Method: For heating only systems the nominal air handler airflow shall be 21.7 CFM per kBtu/hr of rated heating output capacity.
2. *Calculated Target Allowable Duct Leakage Rate (cfm)*:

e) For an air conditioner or heat pump use 400 cfm per rated ton of cooling capacity of outdoor condenser or a package unit. Calculation - 0.15 x 400 x Tons _____ = _____cfm

f) Nominal air handler airflow for heating-only system furnaces shall be based on 21.7 cfm per kBtu/hr of rated heating output capacity. Calculation 0.15 x 21.7 x kBtu/hr _____=_____cfm

3. *Actual Duct Leakage Rate from Leakage Test Measurement (cfm)*: User will input this value from actual leakage test.
4. *Compliance Statement*:
   a. If Actual Duct Leakage Rate from leakage test (C3) is less than or equal to Calculated Target Allowable Duct Leakage Rate (B2) then test Passes.
   b. If the installer is unable to pass the leakage test a smoke test is allowed to confirm that all accessible leaks have been sealed. Enter actual leakage rate before conducting smoke test. Then go to section D Smoke Test below.

D. Smoke Test

1. Pressurize duct system the same as a normal duct leakage test. Then inject theatrical smoke.
2. Test passes when: No smoke is allowed to emanates from all accessible portions of the HVAC system including the package unit, ducts, plenums, wyes, tees, air handler refrigerant line, door panels, and curb. Accessible includes having access thereto, but which first may require removal or opening of access panels, doors, or similar obstructions including moving insulation to access the leak. If there is small amounts of smoke emanating from under duct insulation and the location of the leak cannot be determined then in most situations this would not be required to be fixed. If there is large amount of smoke emanating from under the duct insulation and the leak can be determined the insulation should be removed in the leakage area, duct fixed and the repaired. Requires 100% testing by HERS rater. No sampling allowed.

E. Low Leakage Air-Handling Unit (LLAHU)

1. Enter the Installed Air-Handling Unit Manufacturer Name
2. Enter the Installed Air-Handling Unit Model Number
3. The installed Low Leakage Air-handling Unit Model must be listed here: http://www.energy.ca.gov/title24/equipment_cert/llahu/low_leakage_air_handling_units.pdf
4. Pass if the Manufacturer Name, Model Number of installed equipment is listed with the Energy Commission.

F. Additional Requirements for Compliance
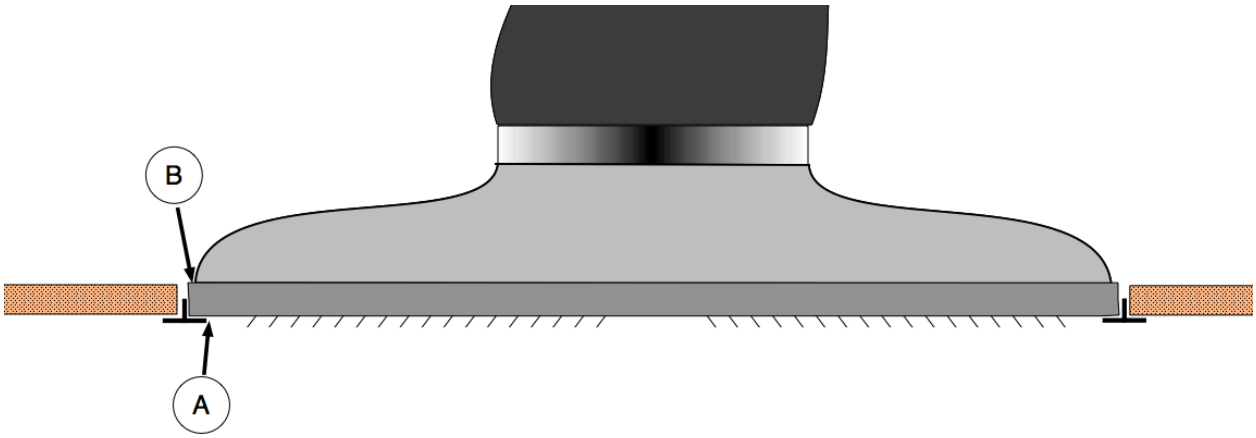
1. When performing the duct test no temporary taping is allowed except for the damper used for outside air.
2. For newly installed ducting building cavities are not allowed.
3. Newly installed cloth backed tape must be covered with Mastic and draw bands.
4. All connection points between the air handler and the supply and return plenums are completely sealed including at the curb.
5. When performing the duct test all the registers must be taped closed. When a register is cut into drywall tape over the register and onto the drywall. For registers in t-bar ceilings then testers are allowed to temporarily tape at point A or B (see diagram below). If taping at point A and it passes, fine, some of the air may be going around the register. If anything, that makes it harder to pass. The installer and rater need to agree on which method they want to use. Taping to the edge of the register under the t-bar (by lifting up on the register) is a LOT more work but will likely result in a lower leakage test value than taping over the edge of the t-bar.