CODES AND STANDARDS ENHANCEMENT INITIATIVE (CASE)

Working Draft Measure Information Template Supermarket Refrigeration

2013 California Building Energy Efficiency Standards

California Utilities Statewide Codes and Standards Team, April 2011

DRAFT

This report was prepared by the California Statewide Utility Codes and Standards Program and funded by the California utility customers under the auspices of the California Public Utilities Commission.

Copyright 2011 Pacific Gas and Electric Company, Southern California Edison, SoCalGas, SDG&E.

All rights reserved, except that this document may be used, copied, and distributed without modification.

Neither PG&E, SCE, SoCalGas, SDG&E, nor any of its employees makes any warranty, express of implied; or assumes any legal liability or responsibility for the accuracy, completeness or usefulness of any data, information, method, product, policy or process disclosed in this document; or represents that its use will not infringe any privately-owned rights including, but not limited to, patents, trademarks or copyrights

Table of Contents

CODES AND STANDARDS ENHANCEMENT INITIATIVE (CASE) 1
1. Purpose 8
2. Overview 10
3. Methodology 19
3.1 Supermarket Prototype Definitions 19
3.2 Energy Analysis and Cost Effectiveness Methodology 20
3.3 Direct Refrigerant Emissions Calculations 21
3.3.1 Base case refrigerant charge description 21
3.3.2 Direct emissions methodology 22
3.4 Acceptance Testing 23
3.5 Stakeholder Meeting Process 23
4. Analysis and Results 24
4.1 Floating Head Pressure 25
4.1.1 Analysis results by climate zone 26
4.1.2 Refrigerant charge analysis 27
4.2 Condenser Specific Efficiency 29
4.2.1 Incremental analysis results 32
4.2.2 Analysis of results by climate zone 33
4.3 Floating Suction Pressure 35
4.3.1 Analysis results by climate zone 36
4.4 Mechanical Subcooling 37
4.4.1 Analysis results by climate zone 38
4.5 Display Case Lighting Control 39
4.5.1 Analysis results by climate zone 39
4.6 Liquid-Suction Heat Exchangers 40
4.6.1 Analysis results by climate zone 41
4.7 Prohibit Open Upright Frozen Food Cases 48
4.8 Refrigeration Heat Recovery 49
4.8.1 Analysis results by climate zone 49
4.8.2 Refrigerant charge analysis 52
4.9 CO_2 Secondary (indirect) or Cascade Cooling 53

4.9.1 Savings Analysis 54
4.10 Walk-in Variable Speed Fan Control 55
4.10.1 Analysis results by climate zone 55
4.10.2 Industry concerns regarding sufficient airflow and product quality 56
5. Recommended Code Language 58
5.1 Title 24 Draft Code Language 58
6. Appendix A: Rejected Measures 62
6.1 Evaporator Coil Specific Efficiency 62
6.2 Display Case LED Lights 62
6.3 Night Covers on Open Display Cases 63
6.4 Prohibit Gas Defrost 63
6.5 Glycol Secondary Loop (Indirect) System Configuration 64
7. Appendix B: System Schematics 65
8. Appendix C: Base Case Facility Descriptions 79
9. Appendix D: Refrigeration Schedules and Equipment Sizing 88
9.1 Refrigeration Schedules 88
9.2 Equipment Sizing per Climate Zone 90
10. Appendix E: Charge Size and Leak Rate Assumptions for Direct Emissions 92
10.1 Summary of Information Obtained on Charge Size and Leak Rates 92
10.2 Methodology for Developing Charge Size Assumptions 96
DX Systems 96
Distributed and Secondary Loop Systems 97
Impact of the Condenser Type 97
10.3 Methodology for Developing Leak Rate Assumptions 98
10.4 Limitations and Considerations 98
11. Appendix F: Wetbulb Sensitivity Study for Floating Head Pressure Measure 99
12. Appendix G: Databases from Savings By Design 100
12.1 Condenser Specific Efficiency 100
13. Appendix H: Energy Analysis for CO_2 Secondary Systems 105
13.1 Analysis Results 106
14. Appendix I: Stakeholder List and Description of Feedback 108
15. Appendix J: Full Cost Results 109
15.1 Floating Head Pressure 109

15.2 Condenser Specific Efficiency 119
15.3 Floating Suction Pressure 127
15.4 Mechanical Subcooling 137
15.5 Walk-In Variable Speed Fan Control 147
15.6 Display Case Lighting Control 157
15.7 Refrigeration Heat Recovery 167
15.8 Liquid-Suction Heat Exchangers 177
16. Appendix K: Acronym List and Glossary 186

TABLE OF FIGURES

Figure 1: Prototype supermarket summary 19
Figure 2: Size and system description for analysis prototypes 20
Figure 3: Base case charge size and leak rate assumptions 22
Figure 4: Legend for analysis results tables 24
Figure 5: Summary of ambient following control TDs for SCT control measure 26
Figure 6: Analysis results for floating head pressure 27
Figure 7: State-wide carbon savings results for floating head pressure 28
Figure 8: State-wide total savings results (including carbon) for floating head pressure 28
Figure 9: Condenser description for specific efficiency measure 29
Figure 10: Example condenser capacity and power versus speed 30
Figure 11: Condenser cost versus MBH capacity at specific-efficiency rating conditions 31
Figure 12 Example of increasing condenser size and resultant specific efficiency 31
Figure 13: System energy usage and TDV energy cost versus specific efficiency 32
Figure 14: Preliminary condenser specific efficiency results 33
Figure 15: State-wide energy analysis summary for condenser specific efficiency measure 33
Figure 16: Analysis results for prototypes, system configurations, and condenser types with benefit/cost ratios less than 1 34
Figure 17: Suction group design SST and Base Case SST setpoints 36
Figure 18: Statewide savings results for floating suction pressure 37
Figure 19: Statewide savings results for mechanical subcooling measure 38
Figure 20: State-wide savings results for display case lighting control measure 39
Figure 21: Suction line heat gain assumptions (MT systems) 40
Figure 22: Suction line heat gain assumptions (LT systems) 41
Figure 23: LSHX sizing assumptions for cost and performance 41
Figure 24: State-wide savings analysis for liquid-suction heat exchangers (MT Walk-Ins) 42
Figure 25: State-wide savings analysis for liquid-suction heat exchangers (LT Walk-Ins) 42
Figure 26: State-wide savings analysis for liquid-suction heat exchangers (MT display cases) 43
Figure 27: State-wide savings analysis for liquid-suction heat exchangers (LT display cases) 44
Figure 28: MT walk-in LSHX simulations with BCR<1.0 44
Figure 29: MT LSHX results by walk-in with results and BCR on a per-SF basis 47
Figure 30: Liquid subcooling for R-404A, R-507, R-407A, and R-410A with equal-sized LSHXs ... 47

Figure 31: Analysis assumptions for both open and reach-in display cases 48
Figure 32: Analysis results for reach-in versus open upright frozen food cases 49
Figure 33: Simulation assumptions for heat reclaim measure 50
Figure 34: State-wide savings results for heat recovery measure 50
Figure 35: Heat recovery results for CTZ15 – Palm Springs 51
Figure 36: State-wide carbon savings results for heat recovery measure 53
Figure 37: State-wide total savings results (including carbon) for heat recovery measure 53
Figure 38: Carbon savings results for indirect cooling measure 54
Figure 39: Savings results (including carbon) for indirect cooling measure 54
Figure 40: State-wide savings results for walk-in variable-speed fan control measure 56
Figure 41: Sacramento carbon savings results for no hot gas defrost 64
Figure 42: Sacramento total savings results (including carbon) for no hot gas defrost 64
Figure 43: Economics analysis for glycol secondary system on large supermarket 64
Figure 44: Small supermarket with central parallel rack compressor system and air-cooled condensers (SAC) 65
Figure 45: Small supermarket with distributed compressor systems and air-cooled condensers (SAD) 66
Figure 46: Small supermarket with central parallel rack compressor system and evaporative-cooled condensers (SEC) 67
Figure 47: Small supermarket with central parallel rack compressor system and water-cooled condensers served by a central evaporative-cooled fluid cooler (SFC) 67
Figure 48: Small supermarket with distributed compressor systems and water-cooled condensers served by a central evaporative-cooled fluid cooler (SFD) 68
Figure 49: Large supermarket with central parallel rack compressor configuration and air-cooled condensers (MAC) 69
Figure 50: Large supermarket with distributed compressor systems and air-cooled condensers (MAD) 70
Figure 51: Large supermarket with central parallel rack compressor system and evaporative-cooled condensers (MEC) 71
Figure 52: Large supermarket with central parallel rack compressor system and water-cooled condensers served by a central evaporative-cooled fluid cooler (MFC) 72
Figure 53: Large supermarket with distributed compressor systems and water-cooled condensers served by a central evaporative-cooled fluid cooler (MFD) 73
Figure 54: Big-box store with central parallel rack compressor system and air-cooled condensers (LAC) 74

Figure 55: Big-box food store with distributed compressor systems and air-cooled condensers (LAD) 75

Figure 56: Big-box store with central parallel compressors and evaporative condenser (LEC) 76

Figure 57: Big-box food store with central parallel rack compressor system and water-cooled condensers served by a central evaporative-cooled fluid cooler (LFC) 77

Figure 58: Large supermarket with distributed compressor systems and water-cooled condensers served by a central evaporative-cooled fluid cooler (MFD) 78

Figure 59: Small supermarket refrigeration schedule 88

Figure 60: Large supermarket refrigeration schedule 89

Figure 61: Big-box store refrigeration schedule 90

Figure 62: Description of two design climate zones 91

Figure 63: TD Sensitivity Analysis 99

Figure 64: Air-cooled axial-fan halocarbon condenser database 102

Figure 65: Centrifugal fan evaporative-cooled halocarbon condenser database 104

Figure 67: Indirect system diagram 105

Figure 68: Analysis assumptions for CO_2 indirect system analysis 106

Figure 69: Energy analysis results for CO_2 indirect system measure 107

1. Purpose

This document is a report of a proposed addition to the energy-efficiency standards outlined in Section 6 of California's Title 24 building code to include supermarket refrigeration systems. Measures to reduce energy consumption in supermarket refrigeration systems were evaluated. A concurrent study of refrigerant charge and leak rates was conducted to assess the direct greenhouse gas impacts (i.e., refrigerant emissions) of centralized direct expansion (DX) systems, distributed systems, and secondary loop systems.

Supermarkets, for the purposes of this report, include retail food stores from 8,000 square feet (typical for a specialty or small neighborhood market) to over 150,000 square feet for "big box" stores that include a compete food store. Supermarket refrigeration systems serve refrigerated display case merchandisers, and walk-in coolers and freezers used for storage. Large "point of sale" boxes equipped with reach-in doors, or refrigerated spaces configured to allow customers to walk through, are also often included in "big box" store designs. Refrigeration systems for these stores typically consist of several groups of multiple hermetic or semi-hermetic compressors manifolded together. These compressor systems or "parallel racks" are commonly located indoors and connected to separate remote condensers, but may also be physically packaged along with a condenser (called a "condensing unit") for smaller stores, or as distributed units in large stores.

Many of the energy savings measures evaluated in this report have an established history in California and are employed in the majority of new supermarkets.

The measures analyzed in this report include:

- Floating head pressure
- Condenser specific efficiency
- Floating suction pressure
- Mechanical subcooling
- Display case lighting control
- Refrigeration heat recovery
- CO_2 secondary (indirect) or cascade cooling
- Liquid-suction heat exchangers
- Walk-in evaporator fan speed control

The last two measures are not recommended for inclusion in the standards for this update cycle.

The study work for this report included: research of supermarket energy efficiency measures, data mining from Savings By Design (SBD) new construction energy efficiency projects, equipment research, interviews with equipment manufacturers, contractors, and supermarket operators, and detailed energy modeling and economic analysis.

Recognizing that some energy efficiency measures may have adverse impacts on refrigerant charge size and/or leak rates, which may in turn lead to increased emissions of high-global warming potential (GWP) refrigerants—such as HFC-404A and HFC-507—this analysis considers not just the potential energy savings associated with each measure, but the *net* greenhouse gas (GHG) impacts associated with both energy consumption and refrigerant emissions. In particular, the net climate impacts are quantitatively assessed for two measures—heat recovery and floating head pressure—to ensure that the measures achieve an overall cost savings over the lifetime of the equipment, based on estimated annual carbon costs developed by the CEC. Moreover, to promote the reduction of overall GHG

emissions, one measure known to reduce annual refrigerant losses at the expense of higher energy consumption—secondary (indirect) cooling—is also assessed in this analysis in terms of both direct (energy consumption) and indirect (GHG emission) impacts.

2. Overview

a. Measure Title	Supermarket Refrigeration Energy Efficiency CASE Study
b. Description	<u>Title 24 Part 6 Measures:</u> Floating head pressure – require controls to float refrigeration system saturated condensing temperature (SCT) to 70°F during low-ambient temperature conditions, with ambient-following control logic and variable speed condenser fans Condenser specific efficiency – require a maximum fan power per unit of capacity on air-cooled and evaporative-cooled refrigerant condensers Floating suction pressure – require controls to reset refrigeration system target suction temperature based on refrigerated display case or walk-in temperature, rather than operating at a fixed suction temperature setpoint Mechanical subcooling – require liquid refrigerant to be subcooled to 50°F or less for low-temperature loads Display case lighting control – require automatic controls to turn off display case lights during non-business Refrigeration heat recovery – require equipment and controls to utilize rejected heat from refrigeration system(s) for space heating, with a limited increase in refrigerant charge <u>Title 24 Part 11 (Reach) Code Measures</u> CO_2 secondary (indirect) or cascade cooling – require that refrigerated display cases and walk-in coolers and freezers utilize carbon dioxide (CO_2) for cooling to reduce HFC refrigerant charge
c. Type of Change	The proposed code changes are mandatory code requirements in Title 24 Part 6 or Title 24 Part 11 (Reach) Codes.

d. Energy Benefits

Values in the summary table below are weighted for different supermarket building prototypes. Analysis on these measures' incremental savings is presented in Section 4. Note that indirect systems result in an increase in energy but are being considered to determine the overall GHG reductions that may result from lower HFC refrigerant charge.

	Energy Savings		Demand Savings		Natural Gas Savings		TDV Energy Savings	
	kWh	**kWh/SF**	**kW**	**W/SF**	**Therms**	**Therms/SF**	**Mmbtu**	**MMBtu/SF**
Arcata								
Floating Head Pressure	91,871	1.49	8.5	0.537	0	0.00	1,859,180	30.33
Condenser Specific Efficiency	1,507	0.03	0.6	0.011	0	0.00	37,680	0.69
Floating Suction Pressure	28,549	0.44	4.4	0.064	0	0.00	614,500	9.45
Mechanical Subcooling	28,837	0.41	5.4	0.067	0	0.00	614,273	8.67
Display Case Lighting Control	121,760	2.20	0.6	0.011	0	0.00	2,047,613	35.84
Heat Reclaim	-53,400	-0.78	-2.0	-0.032	43,977	0.69	8,671,683	99.56
Oakland								
Floating Head Pressure	81,873	1.34	2.7	0.173	0	0.00	1,669,053	27.43
Condenser Specific Efficiency	2,181	0.04	3.7	0.068	0	0.00	62,173	1.15
Floating Suction Pressure	29,510	0.45	4.3	0.066	0	0.00	641,273	9.82
Mechanical Subcooling	29,735	0.42	6.9	0.093	0	0.00	656,960	9.15
Display Case Lighting Control	122,526	2.21	0.7	0.007	0	0.00	2,038,887	35.65
Heat Reclaim	-48,367	-0.70	-1.0	-0.011	31,436	0.50	6,130,635	71.37
Santa Maria								
Floating Head Pressure	84,642	1.39	7.2	0.456	0	0.00	1,729,287	28.46
Condenser Specific Efficiency	2,438	0.04	2.0	0.035	0	0.00	54,817	1.00
Floating Suction Pressure	29,299	0.45	4.5	0.067	0	0.00	636,593	9.76
Mechanical Subcooling	29,532	0.42	6.0	0.081	0	0.00	644,013	8.98
Display Case Lighting Control	122,016	2.20	0.8	0.007	0	0.00	2,048,813	35.77
Heat Reclaim	-49,166	-0.71	-2.8	-0.024	33,001	0.53	6,385,425	73.99
San Diego-Lindbergh								
Floating Head Pressure	68,631	1.16	1.4	0.087	0	0.00	1,471,913	24.81
Condenser Specific Efficiency	2,937	0.05	4.4	0.073	0	0.00	74,007	1.36
Floating Suction Pressure	29,996	0.46	4.1	0.061	0	0.00	651,853	10.01
Mechanical Subcooling	31,193	0.44	7.8	0.114	0	0.00	698,600	9.74
Display Case Lighting Control	125,402	2.26	0.7	0.007	0	0.00	2,125,340	36.99
Heat Reclaim	-41,375	-0.59	-0.3	0.012	17,696	0.31	3,195,500	42.07

	Energy Savings		Demand Savings		Natural Gas Savings		TDV Energy Savings	
	kWh	**kWh/SF**	**kW**	**W/SF**	**Therms**	**Therms/SF**	**Mmbtu**	**MMBtu/SF**
Fullerton								
Floating Head Pressure	75,743	1.27	4.5	0.286	0	0.00	1,688,900	35.16
Condenser Specific Efficiency	3,268	0.06	4.8	0.078	0	0.00	117,667	2.08
Floating Suction Pressure	30,339	0.46	5.2	0.086	0	0.00	659,573	9.99
Mechanical Subcooling	32,359	0.46	10.0	0.163	0	0.00	745,553	10.63
Display Case Lighting Control	124,593	2.24	0.8	0.009	0	0.00	2,072,240	36.05
Heat Reclaim	-46,948	-0.73	-1.8	-0.038	16,646	0.32	2,884,310	41.91
Riverside								
Floating Head Pressure	79,688	1.31	2.1	0.131	0	0.00	1,481,713	24.33
Condenser Specific Efficiency	5,353	0.09	4.8	0.079	0	0.00	214,727	3.62
Floating Suction Pressure	31,196	0.47	5.6	0.089	0	0.00	688,133	10.41
Mechanical Subcooling	34,136	0.48	13.1	0.191	0	0.00	835,160	11.52
Display Case Lighting Control	124,596	2.24	0.8	0.011	0	0.00	2,047,487	35.67
Heat Reclaim	-49,868	-0.75	-1.5	-0.037	16,704	0.28	2,892,648	34.62
Sacramento								
Floating Head Pressure	83,625	1.37	1.7	0.110	0	0.00	1,572,613	25.78
Condenser Specific Efficiency	4,540	0.08	4.8	0.079	0	0.00	196,560	3.31
Floating Suction Pressure	30,864	0.47	5.8	0.096	0	0.00	690,573	10.47
Mechanical Subcooling	33,135	0.46	11.9	0.182	0	0.00	809,860	11.20
Display Case Lighting Control	123,529	2.22	0.5	0.007	0	0.00	2,068,500	36.07
Heat Reclaim	-53,112	-0.80	-4.1	-0.050	23,756	0.39	4,484,329	52.52
Fresno								
Floating Head Pressure	80,300	1.32	1.8	0.111	0	0.00	1,501,767	24.66
Condenser Specific Efficiency	6,692	0.11	4.9	0.080	0	0.00	245,087	4.09
Floating Suction Pressure	31,935	0.49	5.9	0.095	0	0.00	714,173	10.82
Mechanical Subcooling	35,542	0.49	12.5	0.188	0	0.00	876,007	12.09
Display Case Lighting Control	125,199	2.26	0.8	0.009	0	0.00	2,105,827	37.00
Heat Reclaim	-50,693	-0.77	-3.2	-0.034	19,960	0.33	3,725,403	43.80

	Energy Savings		Demand Savings		Natural Gas Savings		TDV Energy Savings	
	kWh	**kWh/SF**	**kW**	**W/SF**	**Therms**	**Therms/SF**	**Mmbtu**	**MMBtu/SF**
Palmdale								
Floating Head Pressure	90,771	1.47	0.7	0.045	0	0.00	1,648,873	26.77
Condenser Specific Efficiency	6,629	0.11	4.9	0.081	0	0.00	243,767	4.07
Floating Suction Pressure	31,286	0.47	5.9	0.096	0	0.00	695,327	10.47
Mechanical Subcooling	34,923	0.48	11.8	0.176	0	0.00	846,867	11.64
Display Case Lighting Control	124,213	2.24	0.8	0.009	0	0.00	2,049,980	35.90
Heat Reclaim	-56,213	-0.86	-3.8	-0.043	21,598	0.35	4,030,393	46.84
Palm Springs								
Floating Head Pressure	69,697	1.13	0.7	0.044	0	0.00	1,277,240	20.77
Condenser Specific Efficiency	13,409	0.23	5.0	0.082	0	0.00	375,240	6.23
Floating Suction Pressure	35,156	0.53	7.4	0.117	0	0.00	786,493	11.86
Mechanical Subcooling	45,087	0.62	17.5	0.265	0	0.00	1,134,920	15.69
Display Case Lighting Control	128,513	2.31	1.1	0.011	0	0.00	2,155,000	37.71
Heat Reclaim	-43,199	-0.67	-3.1	-0.040	6,096	0.11	505,212	7.61

For description of prototype buildings and weighting refer to Methodology section 3 and Analysis and Results section 4 below.

e. Non-Energy Benefits	Non-energy benefits associated with improved supermarket refrigeration system energy efficiency include increased equipment reliability and stored product security. The floating head pressure measure reduces the average operating pressures and temperatures, reducing stress on compressors, condensers, piping, and associated equipment.
f. Environmental Impact	The proposed supermarket refrigeration measures have little statewide change in materials use, water consumption, or water quality. The condenser specific efficiency measure in some instances may be achieved with larger condenser surface, in others with more efficient motors, or improved technology. A larger condenser surface potentially increases refrigerant charge. However, in the case of air-cooled condensers, a rapidly increasing use of micro-channel condenser surface provides higher specific efficiency while potentially *reducing* materials, weight, and refrigerant charge. Three energy efficiency measures are expected to impact refrigerant charge size and/or leak rates, thereby impacting the refrigeration system's annual emissions of high-global warming potential (GWP) refrigerants. Analyses were undertaken to quantify these impacts. Measures that are expected to impact refrigerant charge size and/or leak rates are: • Floating head pressure • Refrigeration heat recovery • CO_2 secondary (indirect) or cascade cooling

	The results of this analysis are presented in Section 4 of this report.
g. Technology Measures	**Measure Availability:** • <u>CO_2 Secondary (indirect) or cascade cooling:</u> secondary systems with CO_2 as the secondary medium are already common in Europe and are gaining popularity in the United States. Manufacturers are beginning to offer refrigeration equipment that is CO_2-compatible. **Useful Life, Persistence, and Maintenance:** The effective useful life (EUL) of all supermarket refrigeration measures is 15 years. Supermarkets are frequently remodeled, as often as every 7-10 years, but the mechanical systems are commonly adapted and re-used through one or more remodel cycles. Persistence of savings for control measures, including floating head pressure, floating suction pressure and display case lighting control can be as little as a few years. Sensors may drift or service contractors may bypass efficiency controls or change settings. Persistence can be improved by initial commissioning, automated setpoint verification and through routine maintenance and/or periodic re-commissioning. Many supermarket chains and companies serving this sector now utilize the computerized supermarket control systems, used in virtually every store, to effect automated monitoring of setpoints and system operation, potentially delivery very high certainty of savings over time.
h. Performance Verification of the Proposed Measure	Mandatory acceptance test procedures for supermarket refrigeration control-related measures will be developed, including: • Floating head pressure • Floating suction pressure • Mechanical subcooling • Display case lighting control • Refrigeration heat recovery

i. Cost Effectiveness

Life-cycle cost analysis results for the cost-effective measures are presented below. The analysis for the CO_2 secondary (indirect) or cascade cooling measure is presented separately, to include economic impact from refrigerant charge and leak reduction analysis.

	Measure Cost		Maintenance Cost		TDV Cost Savings		Life Cycle Cost	
	($)	($/SF)	($)	($/SF)	($)	($/SF)	($)	($/SF)
Arcata								
Floating Head Pressure	$17,002	$0.215	$12,535	$0.158	$165,461	$2.70	($135,924)	($1.72)
Condenser Specific Efficiency	$3,571	$0.045	$0	$0.000	$3,353	$0.06	$218	$0.00
Floating Suction Pressure	$2,489	$0.031	$5,969	$0.075	$54,689	$0.84	($46,231)	($0.58)
Mechanical Subcooling	$4,114	$0.052	$4,775	$0.060	$54,668	$0.77	($45,779)	($0.58)
Display Case Lighting Control	$4,683	$0.059	$5,173	$0.065	$182,231	$3.19	($172,375)	($2.18)
Heat Reclaim	$40,954	$0.517	$19,101	$0.241	$771,752	$12.35	($711,698)	($8.99)
Oakland								
Floating Head Pressure	$17,002	$0.215	$12,535	$0.158	$148,540	$2.44	($119,004)	($1.50)
Condenser Specific Efficiency	$3,571	$0.045	$0	$0.000	$5,533	$0.10	($1,962)	($0.02)
Floating Suction Pressure	$2,489	$0.031	$5,969	$0.075	$57,071	$0.87	($48,614)	($0.61)
Mechanical Subcooling	$4,114	$0.052	$4,775	$0.060	$58,467	$0.81	($49,578)	($0.63)
Display Case Lighting Control	$4,683	$0.059	$5,173	$0.065	$181,454	$3.17	($171,598)	($2.17)
Heat Reclaim	$40,954	$0.517	$19,101	$0.241	$545,607	$8.88	($485,553)	($6.13)
Santa Maria								
Floating Head Pressure	$17,002	$0.215	$12,535	$0.158	$153,901	$2.53	($124,364)	($1.57)
Condenser Specific Efficiency	$3,571	$0.045	$0	$0.000	$4,879	$0.09	($1,307)	($0.02)
Floating Suction Pressure	$2,489	$0.031	$5,969	$0.075	$56,655	$0.87	($48,197)	($0.61)
Mechanical Subcooling	$4,114	$0.052	$4,775	$0.060	$57,315	$0.80	($48,426)	($0.61)
Display Case Lighting Control	$4,683	$0.059	$5,173	$0.065	$182,338	$3.18	($172,482)	($2.18)
Heat Reclaim	$40,954	$0.517	$19,101	$0.241	$568,282	$9.20	($508,228)	($6.42)
San Diego-Lindbergh								
Floating Head Pressure	$17,002	$0.215	$12,535	$0.158	$130,996	$2.21	($101,459)	($1.28)
Condenser Specific Efficiency	$3,571	$0.045	$0	$0.000	$6,586	$0.12	($3,015)	($0.04)
Floating Suction Pressure	$2,489	$0.031	$5,969	$0.075	$58,013	$0.89	($49,555)	($0.63)
Mechanical Subcooling	$4,114	$0.052	$4,775	$0.060	$62,173	$0.87	($53,284)	($0.67)
Display Case Lighting Control	$4,683	$0.059	$5,173	$0.065	$189,148	$3.29	($179,292)	($2.26)
Heat Reclaim	$40,954	$0.517	$19,101	$0.241	$284,389	$5.27	($224,335)	($2.83)

	Measure Cost		Maintenance Cost		TDV Cost Savings		Life Cycle Cost	
	($)	($/SF)	($)	($/SF)	($)	($/SF)	($)	($/SF)
Fullerton								
Floating Head Pressure	$17,002	$0.215	$12,535	$0.158	$150,307	$3.13	($120,770)	($1.53)
Condenser Specific Efficiency	$3,901	$0.049	$0	$0.000	$10,472	$0.18	($6,571)	($0.08)
Floating Suction Pressure	$2,489	$0.031	$5,969	$0.075	$58,700	$0.89	($50,242)	($0.63)
Mechanical Subcooling	$4,114	$0.052	$4,775	$0.060	$66,352	$0.95	($57,462)	($0.73)
Display Case Lighting Control	$4,683	$0.059	$5,173	$0.065	$184,423	$3.21	($174,567)	($2.20)
Heat Reclaim	$40,954	$0.517	$19,101	$0.241	$256,694	$5.28	($196,640)	($2.48)
Riverside								
Floating Head Pressure	$17,002	$0.215	$12,535	$0.158	$131,868	$2.16	($102,331)	($1.29)
Condenser Specific Efficiency	$3,901	$0.049	$0	$0.000	$19,110	$0.32	($15,209)	($0.19)
Floating Suction Pressure	$2,489	$0.031	$5,969	$0.075	$61,242	$0.93	($52,784)	($0.67)
Mechanical Subcooling	$4,114	$0.052	$4,775	$0.060	$74,327	$1.03	($65,437)	($0.83)
Display Case Lighting Control	$4,683	$0.059	$5,173	$0.065	$182,220	$3.17	($172,364)	($2.18)
Heat Reclaim	$40,954	$0.517	$19,101	$0.241	$257,436	$4.39	($197,382)	($2.49)
Sacramento								
Floating Head Pressure	$17,002	$0.215	$12,535	$0.158	$139,958	$2.29	($110,421)	($1.39)
Condenser Specific Efficiency	$3,901	$0.049	$0	$0.000	$17,493	$0.29	($13,592)	($0.17)
Floating Suction Pressure	$2,489	$0.031	$5,969	$0.075	$61,459	$0.93	($53,001)	($0.67)
Mechanical Subcooling	$4,114	$0.052	$4,775	$0.060	$72,075	$1.00	($63,185)	($0.80)
Display Case Lighting Control	$4,683	$0.059	$5,173	$0.065	$184,090	$3.21	($174,234)	($2.20)
Heat Reclaim	$40,954	$0.517	$19,101	$0.241	$399,091	$6.60	($339,037)	($4.28)
Fresno								
Floating Head Pressure	$17,002	$0.215	$12,535	$0.158	$133,652	$2.19	($104,116)	($1.32)
Condenser Specific Efficiency	$3,901	$0.049	$0	$0.000	$21,812	$0.36	($17,911)	($0.23)
Floating Suction Pressure	$2,489	$0.031	$5,969	$0.075	$63,559	$0.96	($55,101)	($0.70)
Mechanical Subcooling	$4,114	$0.052	$4,775	$0.060	$77,962	$1.08	($69,072)	($0.87)
Display Case Lighting Control	$4,683	$0.059	$5,173	$0.065	$187,412	$3.29	($177,556)	($2.24)
Heat Reclaim	$40,954	$0.517	$19,101	$0.241	$331,549	$5.52	($271,495)	($3.43)

	Measure Cost		Maintenance Cost		TDV Cost Savings		Life Cycle Cost	
	($)	($/SF)	($)	($/SF)	($)	($/SF)	($)	($/SF)
Palmdale								
Floating Head Pressure	$17,002	$0.215	$12,535	$0.158	$146,744	$2.38	($117,208)	($1.48)
Condenser Specific Efficiency	$3,901	$0.049	$0	$0.000	$21,694	$0.36	($17,793)	($0.22)
Floating Suction Pressure	$2,489	$0.031	$5,969	$0.075	$61,882	$0.93	($53,424)	($0.67)
Mechanical Subcooling	$4,114	$0.052	$4,775	$0.060	$75,368	$1.04	($66,479)	($0.84)
Display Case Lighting Control	$4,683	$0.059	$5,173	$0.065	$182,442	$3.20	($172,586)	($2.18)
Heat Reclaim	$40,954	$0.517	$19,101	$0.241	$358,692	$5.91	($298,638)	($3.77)
Palm Springs								
Floating Head Pressure	$17,002	$0.215	$12,535	$0.158	$113,670	$1.85	($84,133)	($1.06)
Condenser Specific Efficiency	$3,901	$0.049	$0	$0.000	$33,395	$0.55	($29,494)	($0.37)
Floating Suction Pressure	$2,489	$0.031	$5,969	$0.075	$69,995	$1.06	($61,538)	($0.78)
Mechanical Subcooling	$4,114	$0.052	$4,775	$0.060	$101,004	$1.40	($92,115)	($1.16)
Display Case Lighting Control	$4,683	$0.059	$5,173	$0.065	$191,788	$3.36	($181,932)	($2.30)
Heat Reclaim	$40,954	$0.517	$19,101	$0.241	$44,962	$1.07	$15,092	$0.19

Economic analysis results for the CO_2 secondary (indirect) or cascade cooling measure, below:

	Measure Cost ($)	Refrigerant Cost Savings Range		Carbon Cost Savings Range		Life-Cycle Cost Range	
		Low	High	Low	High	Low	High
Small Supermarket	$50,000	$13,044	$19,986	$90,224	$138,238	($53,268)	($108,224)
Large Supermarket	$120,000	$65,557	$100,357	$453,448	$694,158	($399,004)	($674,515)

j. Analysis Tools	None. All measures are mandatory measures so no simulation tools are required for compliance.

k. Relationship to Other Measures	Many of the subject energy efficiency measures are highly inter-dependent. The analysis methodology for inter-dependent measures was designed to ensure that the results would appropriately reflect the incremental costs and benefits, with the most commonly used and cost-effective measures being incorporated in the "baseline" for the measures that were less commonly used or potentially less cost-effective. • Floating head pressure with variable speed fans and variable-setpoint (ambient following) control strategy was used as the basis of comparison for the condenser specific efficiency measure. • For the analysis of the mechanical subcooling measure, floating head pressure to 70°F SCT was assumed as the basis of comparison, rather than fixed (higher) head pressure to avoid overstating the benefit of liquid subcooling. • The heat reclaim measure was evaluated with floating head pressure to 70°F in the baseline case to capture the trade-off in increased compressor energy associated with the use of a heat recovery holdback valve—which is necessary to achieve substantial heat recovery.

3. Methodology

This section provides a description of the methodology used to evaluate the various supermarket refrigeration measures under consideration of the 2013 code change cycle. Topics in this section include:

- Supermarket Prototype Definitions
- Simulation and Cost Effectiveness Methodology
- Direct Refrigerant Emissions Calculation Methodology
- Acceptance Test Methodology
- Stakeholder Meeting Process

3.1 Supermarket Prototype Definitions

Prototype supermarket models were developed to estimate the cost effectiveness of the proposed Title 24 supermarket standards addressed in this report. Three supermarket prototypes were developed: a small supermarket, a large supermarket, and a "big-box" food store utilizing large "point of sale" refrigeration boxes with display doors. Several refrigeration system configurations were identified, sufficient to cover most of the designs used for supermarkets, for analysis of the proposed measures. Descriptions of the prototype supermarket models and their various refrigeration systems used in this analysis are shown in this section. Figure 1 lists the three prototype supermarket sizes.

Analysis Prototype		**Area (Square Feet)**
Prototype 1	Small Supermarket	10,000
Prototype 2	Large Supermarket	60,700
Prototype 3	Big Box Food Store	150,000

Figure 1: Prototype supermarket summary

Each refrigeration measure evaluated in this analysis was applied to all three prototypes (unless otherwise noted in Section 4). In addition, each prototype was developed with three different condenser types and two different compressor system configurations. To designate each combination of prototype supermarket, condenser type and compressor system type, a three-letter designation was employed throughout this report, as described in Figure 2 (e.g. SAC for small, air-cooled, central).

Supermarket Prototype	**Condenser Type**	**Compressor System**	**Designation**
Small Supermarket	Air-cooled	Central	SAC
		Distributed	SAD
	Evaporative cooled	Central	SEC
	Water-cooled condenser with water-cooled fluid cooler	Central	SFC
		Distributed	SFD
Large Supermarket	Air-cooled	Central	MAC
		Distributed	MAD
	Evaporative cooled	Central	MEC

	Water-cooled condenser with water-cooled fluid cooler	Central	MFC
		Distributed	MFD
Big Box Store	Air-cooled	Central	LAC
		Distributed	LAD
	Evaporative cooled	Central	LEC
	Water-cooled condenser with water-cooled fluid cooler	Central	LFC
		Distributed	LFD

Figure 2: Size and system description for analysis prototypes

Appendix B contains schematics of each system type.

3.2 Energy Analysis and Cost Effectiveness Methodology

The energy usage for each supermarket prototype was evaluated using DOE-2.2R energy simulation software. The DOE-2.2R version used (2.2R) is a sophisticated component-based energy simulation program that can accurately model the building envelope, lighting systems, HVAC systems, and refrigeration systems—including the complex interaction between refrigerated supermarket display cases and the surrounding indoor environment. The 2.2R version is specifically designed to include refrigeration systems, using refrigerant properties, mass flow and component models to accurately describe refrigeration system operation and controls system effects.

Measures under consideration for the 2013 code change cycle were evaluated in ten different climate zones:

- CTZ01 - Arcata
- CTZ03 – Oakland
- CTZ05 – Santa Maria
- CTZ07 – San Diego (Lindbergh)
- CTZ08 - Fullerton
- CTZ10 – Riverside
- CTZ12 – Sacramento (Sacramento Executive Airport)
- CTZ13 – Fresno
- CTZ14 – Palmdale
- CTZ15 – Palm Springs

Climate zones were selected to cover a sufficient diversity of California climates to represent the sensitivity of supermarket refrigeration measures to climatic differences. Not all measures were simulated in all climate zones, where the rigor of performing individual climate zone analysis was not necessary. The subject climate zones for each measure are described in Section 4.

A Base Case is defined for each of the three prototype grocery stores. The analysis Base Case is developed using Title 24 requirements for envelope, lighting and HVAC systems, federal walk-in standards and industry standard practice for refrigeration equipment and controls, obtained from the Base Case criteria used in the California Savings By Design program.

Savings By Design is a design assistance and incentive program offered by utilities in California, including an initiative specifically focused on supermarkets and refrigerated warehouses since 2001. Under this program, several hundred supermarkets have been evaluated using whole-building

simulation focused on refrigeration measures, as well as receiving incentives following post-installation field inspections. Information obtained from this program provided a detailed understanding of current industry practice.

The cost-effectiveness of the proposed measures was calculated using the Life Cycle Costing (LCC) Methodology prepared by the California Energy Commission. Measure costs are equal to the material costs, freight cost, sales taxes, labor costs, and tool rental costs associated with installing and commissioning the equipment or material embodied by the measure, minus the same costs associated with the equipment or material embodied by the Base Case.

The net present value of the energy savings was quantified using the Time Dependent Valuation (TDV) methodology, which assigns an energy cost to each hour of the year in order to capture the actual cost of energy to users, to the utility systems, and to society—which is different depending on the time of the day, week, and year that the energy is consumed. TDV multipliers are statistically correlated to the weather files used in the simulation, the energy market, estimated escalation rates, and other factors. A unique set of TDV energy values was used for each weather file.

The Base Case assumptions concerning load, facility operations and other factors are held constant, with the only changes being those specific equipment changes or control strategies associated with each measure. Some measures involve adjustments to the Base Case in order to properly evaluate the energy savings. These "Baseline" adjustments are described in Section 4, as applicable.

3.3 Direct Refrigerant Emissions Calculations

In cases where energy efficiency measures are expected to impact refrigerant charge size and/or leak rates, thereby impacting the refrigeration system's annual emissions of high-global warming potential (GWP) refrigerants, analyses were undertaken to quantify these impacts and assess the measure based on net cost and greenhouse gas (GHG) benefit. This was performed by (1) quantifying the direct (refrigerant) and indirect (energy) emission savings associated with the measures on a carbon equivalent basis, and (2) quantifying the dollar savings of the measures based on measure cost, refrigerant cost, TDV energy cost, and carbon cost. [1]

3.3.1 Base case refrigerant charge description

Charge size and leak rate assumptions were developed for each base case store, as summarized in Figure 3. For leak rates, a reasonable range was identified for each store type, due to the high variability. Average GWP values of 3,922 and 3,985 were assumed for R-404A and R-507 respectively in all base case system configurations, based on the IPCC Fourth Assessment Report (2008). *Appendix E: Charge Size and Leak Rate Assumptions for Direct Emissions* provides a thorough description of the methodology used to develop these assumptions.

Base Case Store	Charge Size (kg)	Leak Rate

[1] The carbon costs associated with the net greenhouse gas emissions of each measure are calculated based on CEC price forecasts for annual carbon costs in 2011 ($13.98) through 2026 ($64.54), based on an assumed 15-year lifetime of equipment.

		Lower Bound	Upper Bound
SAC	330	15%	25%
SAD	165	10%	15%
SEC	360	15%	25%
SFC	200	15%	25%
SFD	100	10%	15%
MAC	1,660	15%	25%
MAD	830	10%	15%
MEC	1,825	15%	25%
MFC	995	15%	25%
MFD	500	10%	15%
LAC	2,000	15%	25%
LAD	1,000	10%	15%
LEC	2,200	15%	25%
LFC	1,200	15%	25%
LFD	600	10%	15%

Figure 3: Base case charge size and leak rate assumptions

3.3.2 Direct emissions methodology

The following energy efficiency measures have direct emissions impacts.

Floating head pressure

With regard to direct (refrigerant) emissions, this measure is assumed to increase charge size by up to 5% for systems with air-cooled condensers,[2] due to seasonal change in ambient temperature and the need to have enough gas to handle cold days when the condenser starts to fill with liquid. Although this increase is expected to only be observed in colder climates, to be conservative, the assumption of a 5% increase in charge size was applied to all climate zones.

Refrigeration heat recovery

Per the definition of the measure, refrigerant heat recovery was assumed to increase charge size by up to 20% or 0.5 lbs/MBH of heating capacity. Additionally, refrigerant heat recovery is assumed to increase a supermarket's annual refrigerant leak rate by 5% as a result of the additional equipment and piping required to implement this measure.

CO_2 secondary (indirect) or cascade cooling

[2] According to some industry experts, floating head pressure may actually lead to a decrease in charge size and/or leak rate, depending on system design and climate. The assumptions used in this analysis are conservative, intended to represent a worst-case yet realistic scenario.

Of all the proposed measures, secondary cooling systems have the most significant impact on the charge size and annual refrigerant leak rate of a supermarket refrigeration system. This is due to the avoided need to circulate the primary refrigerant throughout the store. For this analysis, it is assumed that a secondary cooling system has a charge size equal to 0.81×10^{-3} lbs/Btu/h of the system's cooling capacity and an annual leak rate of 5% - 15%. The methodology used to develop these assumptions is provided in *Appendix E: Charge Size and Leak Rate Assumptions for Direct Emissions* .

3.4 Acceptance Testing

The costs for each measure include additional incremental fine-tuning and commissioning labor during construction and start-up to achieve proper operation, as well as the additional time required for acceptance testing of measures, which would typically be done concurrently.

Acceptance testing protocols will be developed and refined through field tests in new stores.

3.5 Stakeholder Meeting Process

As part of the CASE study development process, a series of meetings with stakeholder were conducted to present CASE Studies findings to, and solicit comments from, industry stakeholder affected by the potential additions to the Title 24 code for supermarkets. A stakeholder list was compiled of equipment manufacturers and distribution representatives, supermarket refrigeration system designers and contractors, control system manufacturers, supermarket owners and operators, utility representatives, code officials, and staff from California Energy Commission (CEC) and California Air Resources Board (CARB).

Three stakeholder meetings were held. The first two meetings gave outlines of the proposed analysis methodology and proposed measures. One of these was held concurrently with the 2010 Food Marketing Institute Energy and Store Development Conference to gain broader industry involvement. The third meeting gave cost effectiveness of proposed measures and proposed requirements. All three gave background on current code requirements and the code revision process.

In addition, stakeholders were contacted at ASHRAE meetings and by phone.

The stakeholder list and feedback is given in Appendix I.

4. Analysis and Results

Section 4 presents the measure descriptions and incremental analysis results. The objective of the analysis is to determine requirements which are cost effective over the life of the facility and which can be achieved with currently available technology or that which can reasonably be expected to be available in the marketplace by the time the 2013 standard takes effect, in January 2014.

Energy savings and cost effectiveness results for the following measures are captured in this section:

- Floating head pressure
- Condenser specific efficiency
- Floating suction pressure
- Mechanical subcooling
- Display case lighting control
- Liquid-suction heat exchangers
- Refrigeration heat recovery
- CO_2 secondary (indirect) or cascade cooling
- Walk-in variable speed fan control

Where applicable, measure costs include the present value of maintenance costs for the analysis period (assumed to be 15 years, based on Life Cycle Costing methodology).

Full results for each measure are presented in Appendix J. Results presented in this section are abbreviated averages, which are presented in three parts. The first part includes averages across all climate zones and are averaged based on prototype supermarket size and condenser type. Figure 4 shows a key for the three-letter designations used in the first part of the results tables in this section.

Three-Letter Designation	Description
SXX Average	Average of results for all small supermarket prototypes, including air-cooled, evaporative, and fluid cooled condensers, and central and distributed system types
MXX Average	Average of results for all large supermarket prototypes, including air-cooled, evaporative, and fluid cooled condensers, and central and distributed system types
LXX Average	Average of results for all big-box food store prototypes, including air-cooled, evaporative, and fluid cooled condensers, and central and distributed system types
XAX Average	Average of all results with air-cooled condensers, including small, large, and big-box food stores, and both central and distributed systems.
XEX Average	Average of all results with evaporative-cooled condensers, including small, large, and big-box food stores, and both central and distributed systems.
XFX Average	Average of all results with water-cooled condensers, including small, large, and big-box food stores, and both central and distributed systems.

Figure 4: Legend for analysis results tables

The second part of the results table in each section shows average results across all prototype sizes, condenser types, and system configurations for each climate zone, and the third part shows the absolute maximum and minimum values across all climate zones, prototype sizes, condenser types, and system configurations.

4.1 Floating Head Pressure

This measure evaluates the feasibility and cost-effectiveness of floating head pressure to 70°F with ambient following control logic and condenser fan variable speed control. All condenser fans on all condensers serving a common high-side were assumed to be controlled in unison (at the same speed). The ambient following control logic sets the target SCT by adding a fixed control temperature difference (TD) to the ambient temperature (wet bulb for evaporative-cooled and fluid cooled condensers, or dry bulb for air-cooled condensers). The condenser fan speeds are continuously adjusted to maintain the target SCT, with an override minimum SCT of 70°F, and an override maximum SCT of 95°F in hot climates and 90°F for mild climates. As explained in Appendix D, two simulation models were constructed, with the simulated equipment sized based on design criteria from two different climate zones—a representative hot climate zone (CTZ12 – Sacramento), and a representative mild climate zone (CTZ05 – Santa Maria). For statewide analysis, either the representative hot-climate model or mild-climate model was simulated in each of the ten selected climate zones.

For this measure, the ambient-following control TDs were initially simulated at the design TDs and then checked to determine if a lower TD would increase savings. If so, the optimum TD was determined iteratively and then increased by two degrees to avoid over-optimization of simulation results. In actual practice, the TD is often adjusted to achieve an average condenser fan speed of 60% to 80% when the system is operating in the control range (i.e. between the 70°F minimum and the minimum maximum SCT) – which in most instances is close to the optimum TD, and effectively overcomes sensor errors. Figure 5 shows the control TDs used for analysis of each of the refrigeration system configurations and for each climate-specific prototype

Supermarket Prototype	Condenser Type	System Type	Control TD	
			CTZ12 Prototypes	CTZ05 Prototypes
Small Supermarket	Air-cooled	Central	10°F LT, 13°F MT	10°F LT, 15°F MT
		Distributed	9°F LT, 12°F MT	10°F LT, 15°F MT
	Evaporative	Central	18°F	22°F
	Fluid Cooler	Central	32°F	32°F
		Distributed	32°F	32°F
Large Supermarket	Air-cooled	Central	10°F LT, 13°F MT	10°F LT, 15°F MT
		Distributed	10°F LT, 15°F MT	10°F LT, 15°F MT
	Evaporative	Central	22°F	24°F
	Fluid Cooler	Central	32°F	33°F
		Distributed	32°F	33°F
Big Box Store	Air-cooled	Central	10°F LT, 13°F MT	10°F LT, 15°F MT

		Distributed	8°F LT, 10°F MT	10°F LT, 15°F MT
	Evaporative	Central	16°F	22°F
	Fluid Cooler	Central	32°F	32°F
		Distributed	32°F	32°F

Figure 5: Summary of ambient following control TDs for SCT control measure

The Base Case operation assumes a fixed 85°F saturated condensing temperature (SCT) setpoint for small supermarket prototypes, and a fixed 80°F SCT setpoint for Large Supermarkets and Big Box Food store prototypes, based on observations that smaller systems are more likely to operate at higher head pressures and are less likely to be subject to chain specifications and automated setpoint monitoring.

4.1.1 Analysis results by climate zone

Figure 6 below summarizes the simulation results for the floating head pressure measure simulated in all ten climate zones:

	Energy Savings (kWh)	Energy Savings/ SF (kWh)	TDV Cost Savings ($)	TDV Cost Savings /SF ($)	Measure Cost plus Maintenance Cost ($)	Benefit/ Cost Ratio
SXX Average	25,989	1.64	$49,532	$3.13	$13,923	3.56
MXX Average	94,194	1.58	$162,842	$2.73	$35,251	4.62
LXX Average	121,870	0.75	$212,155	$1.31	$39,436	5.38
XAX Average	124,636	2.08	$222,211	$3.80	$33,055	6.72
XEX Average	50,565	0.76	$97,711	$1.60	$27,191	3.59
XFX Average	51,792	0.85	$82,707	$1.38	$27,191	3.04

All Averages						
Arcata	91,871	1.49	$165,461	$2.700	$29,537	5.60
Oakland	81,873	1.34	$148,540	$2.441	$29,537	5.03
Santa Maria	84,642	1.39	$153,901	$2.532	$29,537	5.21
San Diego-Lindbergh	68,631	1.16	$130,996	$2.208	$29,537	4.43
Fullerton	75,743	1.27	$150,307	$3.129	$29,537	5.09
Riverside	79,688	1.31	$131,868	$2.165	$29,537	4.46
Sacramento	83,625	1.37	$139,958	$2.294	$29,537	4.74
Fresno	80,300	1.32	$133,652	$2.194	$29,537	4.52
Palmdale	90,771	1.47	$146,744	$2.382	$29,537	4.97
Palm Springs	69,697	1.13	$113,670	$1.848	$29,537	3.85

Maximum	204,068	2.91	$392,707	$9.979	$44,484	10.37

Minimum	6,039	0.18	$14,257	$0.267	$13,040	1.09

Figure 6: Analysis results for floating head pressure

The results indicate that the measure is cost-effective for all system configurations and all climate zones. The code recommendation is a mandatory minimum head pressure of 70°F with variable-speed condenser fan control with ambient-following setpoint control.

Wetbulb sensor reliability is a concern for ambient-following control of evaporative condensers. Wetbulb sensors (in practice normally a drybulb sensor and humidity sensor are used to derive WBT) generally lose drift or lose calibration over time. Figure 63 in Appendix F explores the cost savings with varying control TDs for evaporative condensers, to analyze the sensitivity of savings and economics vs. sensor calibration. The analysis determined that ambient-following control remains cost-effective even with significant sensor error.

4.1.2 Refrigerant charge analysis

Impacts on the R-404A/R-507 refrigerant charge size and leak rate were also analyzed for this measure. Figure 7 summarizes the results of this analysis in terms of refrigerant emissions in pounds and GHG emissions (shown in metric tons of carbon dioxide equivalent [$MTCO_2eq$] emissions), as well as the net GHG impact, which accounts for both direct (refrigerant) and indirect (energy) emissions.

	Annual Refrigerant Savings (Range)				**Annual Energy Savings**	**Net Savings (Range)**	
	Pounds		**$MTCO_2eq$**		**$MTCO_2eq$**	**$MTCO_2eq$**	
	High	**Low**	**High**	**Low**		**High**	**Low**
SXX Average	-1	-2	-3	-4	11	8	6
MXX Average	-7	-12	-13	-21	38	25	17
LXX Average	-9	-14	-16	-26	50	34	24
XAX Average	-15	-24	-26	-43	51	25	8
XEX Average	0	0	0	0	21	21	21
XFX Average	0	0	0	0	21	21	21
All Average							
Arcata	-6	-10	-11	-17	37	27	20
Oakland	-6	-10	-11	-17	33	23	16
Santa Maria	-6	-10	-11	-17	35	24	17
San Diego-Lindbergh	-6	-10	-11	-17	28	17	11
Fullerton	-6	-10	-11	-17	31	20	14
Riverside	-6	-10	-11	-17	32	22	15
Sacramento	-6	-10	-11	-17	34	24	17
Fresno	-6	-10	-11	-17	33	22	16

Palmdale	-6	-10	-11	-17	37	26	20
Palm Springs	-6	-10	-11	-17	28	18	11

Maximum Net Savings	63	54
Minimum Net Savings	-2	-37

Figure 7: State-wide carbon savings results for floating head pressure

Figure 8 summarizes the net impacts of this measure on lifetime costs, including the savings associated with avoided GHG emissions. As shown, the direct GHG impacts associated with increased refrigerant emissions reduce the net climate benefits and cost savings of this measure, but still result in significant, cost-effective GHG benefits for all system configurations and all climate zones.

	Measure Cost ($)	Refrigerant Cost Savings Range ($)		TDV Energy Cost Savings ($)	Carbon Cost Savings Range ($)		Net Savings Range ($)	
		High	Low		High	Low	High	Low
SXX Average	$13,923	-$191	-$311	$49,532	$4,096	$3,269	$39,514	$38,567
MXX Average	$35,251	-$963	-$1,565	$162,842	$12,984	$8,821	$139,612	$134,846
LXX Average	$39,436	-$1,135	-$1,845	$212,155	$17,263	$12,166	$188,847	$183,041
XAX Average	$33,055	-$1,908	-$3,101	$222,211	$12,544	$4,137	$199,793	$190,193
XEX Average	$27,191	$0	$0	$97,711	$10,546	$10,546	$81,066	$81,066
XFX Average	$27,191	$0	$0	$82,707	$10,802	$10,802	$66,319	$66,319

All Average

Arcata	$29,537	-$763	-$1,240	$165,461	$13,781	$10,418	$148,942	$145,102
Oakland	$29,537	-$763	-$1,240	$148,540	$11,696	$8,333	$129,936	$126,096
Santa Maria	$29,537	-$763	-$1,240	$153,901	$12,274	$8,911	$135,874	$132,035
San Diego-Lindbergh	$29,537	-$763	-$1,240	$130,996	$8,934	$5,571	$109,630	$105,790
Fullerton	$29,537	-$763	-$1,240	$150,307	$10,417	$7,055	$130,424	$126,584
Riverside	$29,537	-$763	-$1,240	$131,868	$11,240	$7,877	$112,808	$108,968
Sacramento	$29,537	-$763	-$1,240	$139,958	$12,061	$8,699	$121,719	$117,879
Fresno	$29,537	-$763	-$1,240	$133,652	$11,368	$8,005	$114,720	$110,880
Palmdale	$29,537	-$763	-$1,240	$146,744	$13,552	$10,189	$129,996	$126,156
Palm Springs	$29,537	-$763	-$1,240	$113,670	$9,157	$5,794	$92,527	$88,687

Maximum Net Savings	$379,173	$373,367
Minimum Net Savings	$2,949	$2,949

Figure 8: State-wide total savings results (including carbon) for floating head pressure

4.2 Condenser Specific Efficiency

The cost-effectiveness a minimum condenser specific efficiency requirement was evaluated for both air-cooled and evaporative-cooled condensers. Condenser specific efficiency is the full-load condenser Total Heat of Rejection (THR) capacity at standardized conditions divided by the fan input electric power at 100% fan speed (including spray pump electric input power for evaporative condensers). Figure 9 describes the two condenser types used for in the analysis.

Condenser Category	Condenser Type for Analysis
Evaporative-Cooled	Centrifugal-fan halocarbon condenser, for location indoors or outdoors, with integral spray pump.
Air-Cooled	Axial-fan halocarbon condenser for outdoor location.

Figure 9: Condenser description for specific efficiency measure

A direct correlation between cost and specific efficiency could not be directly determined from manufacturer's catalog information, as manufacturing cost is not proportionately reflected in model-by-model sell price for these units. An alternative method was employed to establish the minimum cost-effective condenser specific efficiency, which is more consistent with how manufacturers could comply with an efficiency standard, with the least difficulty, in terms of product redesign. In general, specific efficiency is improved by reducing the fan power for a given condenser.

Condenser fan power reduces by approximately the "third-power" of fan speed reduction whereas condenser capacity is roughly linear (or better than linear) with reduction in fan speed. Manufacturers stated that both air-cooled and evaporative-cooled condensers generally have flexibility in fan design and speed and thus motor power. In particular, the maximum speed for air-cooled condensers using variable speed EC (electronically commutated; also called brushless DC or BLDC) motors can easily be reprogrammed at the factory, making specific efficiency essentially a 'settable' parameter.

The air-cooled condenser data provided by one manufacturer, shown in Figure 10, showing heat rejection capacity, fan power, and resultant specific efficiency as a function of fan speed, illustrates the sensitivity of specific efficiency to fan speed, with everything else held constant. Plots of capacity and power increase reference the left scale, while the plot of specific efficiency increase references the right scale.

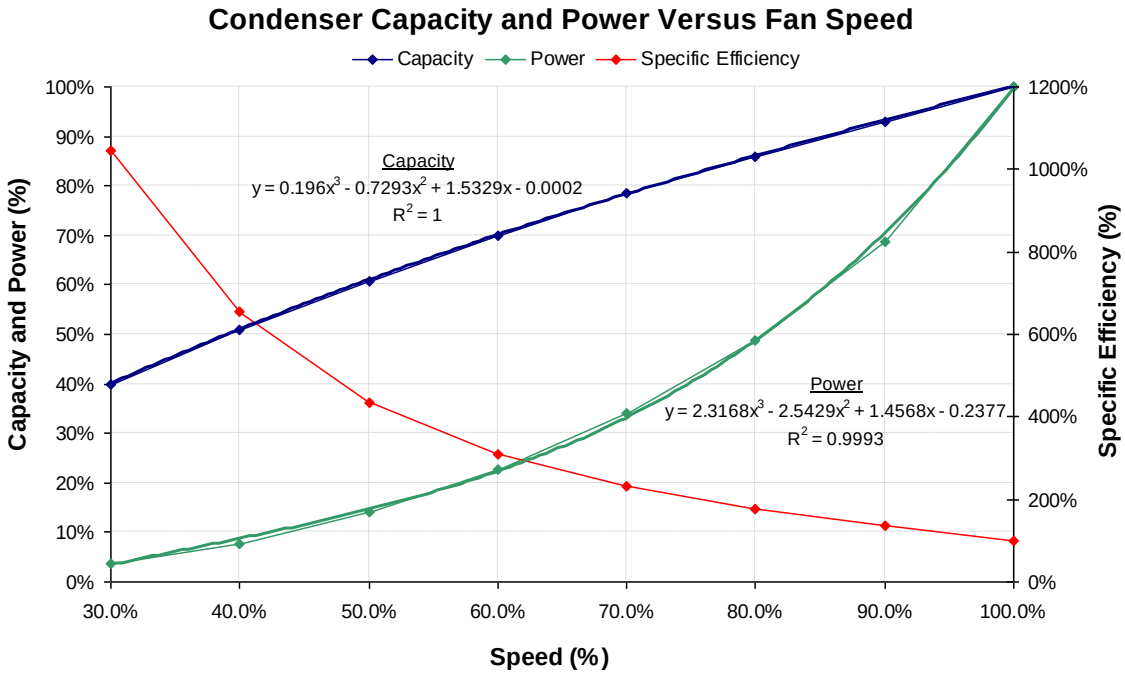

Speed:	100%	90%	80%	70%	60%	50%	40%	30%
Capacity:	100%	93%	86%	78%	70%	61%	51%	40%
Power:	100%	69%	49%	34%	23%	14%	8%	4%
Specific Efficiency:	100%	135%	177%	231%	308%	434%	655%	1,044%

Figure 10: Example condenser capacity and power versus speed

Figure 10 shows that the relationship between % fan speed and % condenser capacity is nearly linear while fan power is subject to the fan affinity laws, which state that % fan power exhibits a "third power" relationship with % fan speed. Consequently, specific efficiency increases exponentially at reduced fan speed. Without substantial product line changes manufacturers could utilize this relationship by reducing or limiting the full-load fan speed and motor power of any non-compliant condensers to a speed which achieves the required efficiency, thus still being able to market the condenser, with a revised capacity listing.

In many instances improvements could also be made with higher efficiency motors, fan blades, or fan venturis. This appears to be the most likely path for certain air-cooled halocarbon condensers which utilize inefficient motors. The methodology described above is considered the most conservative with respect to measure cost, and also an approach that could be adopted without major product line changes or "tooling" difficulty for smaller manufacturers.

A comparable method was employed to calculate measure cost for this analysis. A correlation was performed between end-user cost and full-speed condenser Total Heat of Rejection (THR) capacity for various condenser types, as shown in Figure 11, for axial-fan air-cooled halocarbon condensers of two types; those with standard induction motors and those using EC motors. The correlation was used to calculate the cost of incrementally over-sizing the condenser, and then limiting the maximum condenser fan speed to match the capacity of the original-size condenser—to achieve the desired increase in condenser specific efficiency.

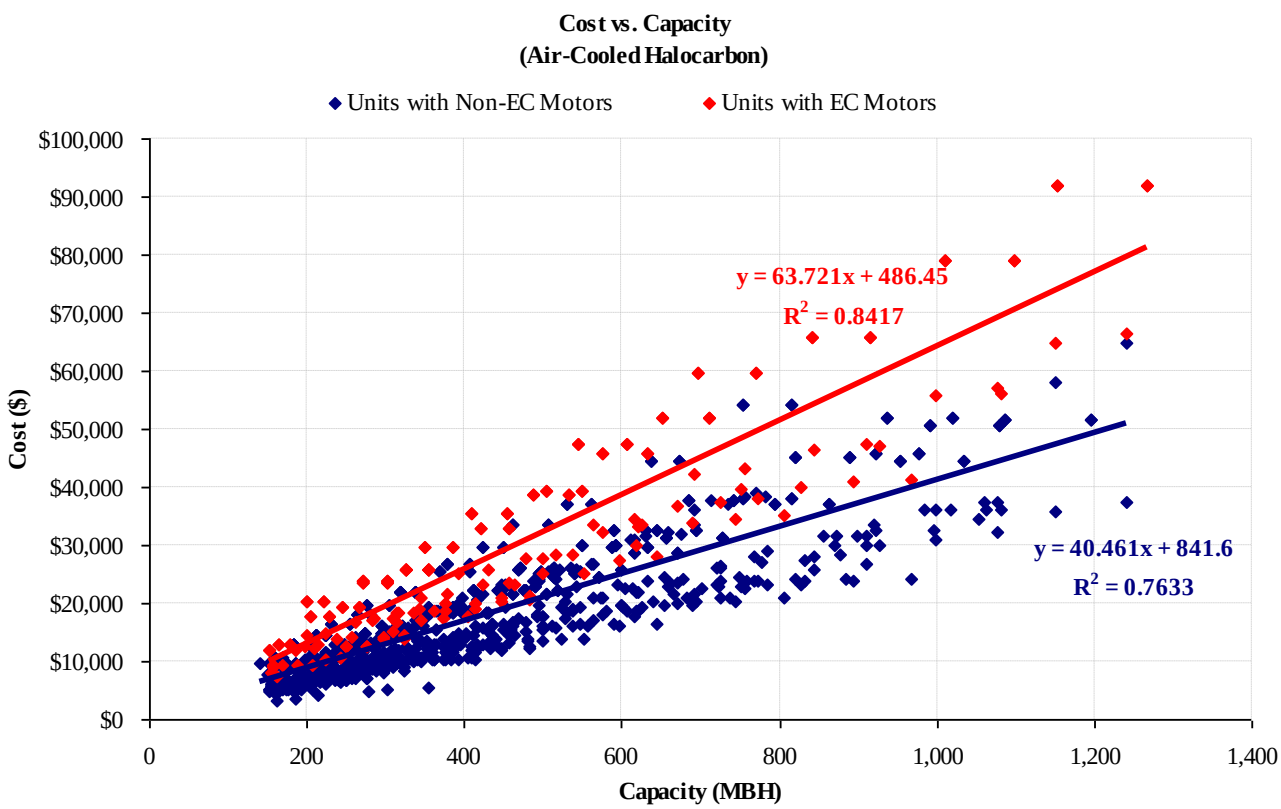

Figure 11: Condenser cost versus MBH capacity at specific-efficiency rating conditions

The table in Figure 12 demonstrates the preceding analytical approach for air-cooled axial-fan halocarbon condensers—with a beginning full-speed capacity of 564 thousand Btus per hour (MBH) and a beginning specific efficiency of 53 (Btu/h)/W. A 5% increase in condenser size changes specific efficiency from 53 to 65 (Btu/h)/W—a 23% increase.

% incremental increase in condenser size	Capacity of larger condenser at 100% speed (MBH)	Power of larger condenser at 100% speed at original specific efficiency (kW)	Required % capacity of oversized condenser to match original capacity	Maximum speed of new condenser to match original capacity	Power at reduced maximum speed (kW)	New Specific Efficiency ((Btu/h)/W)
0%	564	10.6	100%	100%	10.6	53
1%	570	10.8	99%	99%	10.2	55
2%	575	10.9	98%	97%	9.8	58
3%	581	11.0	97%	96%	9.4	60
4%	587	11.1	96%	94%	9.1	62
5%	592	11.2	95%	93%	8.7	65

Figure 12 Example of increasing condenser size and resultant specific efficiency

A DOE2.2R simulation was used to calculate prototype building energy usage and TDV energy cost with varying condenser specific efficiency (condenser fan power was adjusted, with all other

parameters held constant). Figure 13 shows the simulation results for the large supermarket prototype with air-cooled condensers in the CTZ12-Sacramento climate zone.

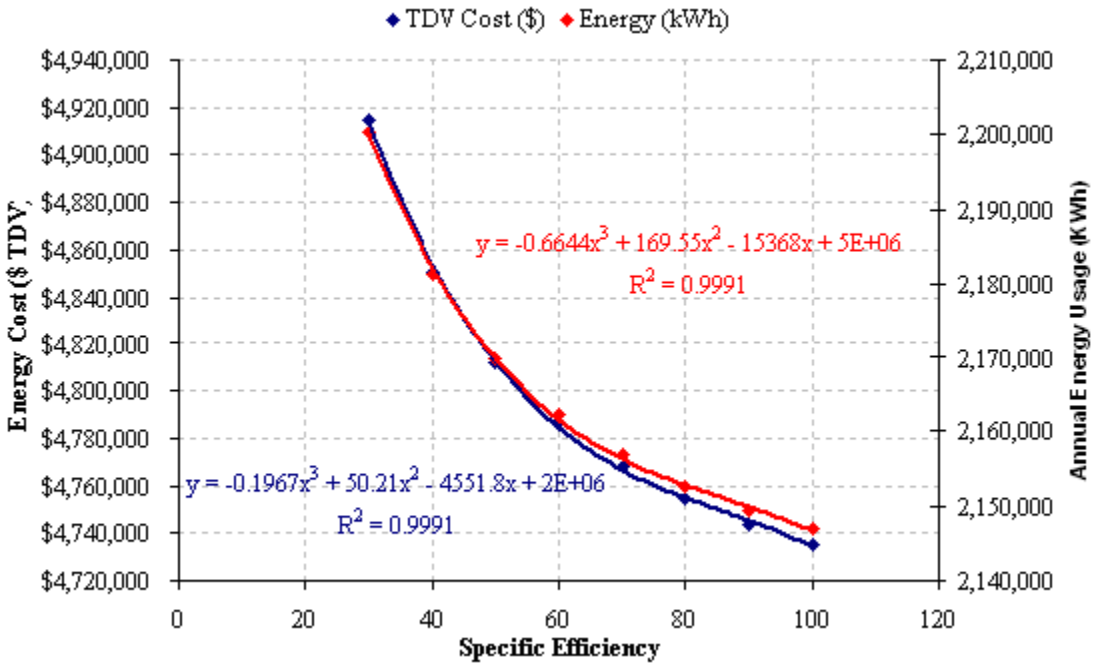

Figure 13: System energy usage and TDV energy cost versus specific efficiency

The simulation results, condenser costs, and incremental-oversize analysis were combined to determine the most cost-effective condenser specific efficiency—defined as the efficiency at which further incrementally increasing the condenser size is no longer cost-effective.

For this measure, the prototype supermarkets were simulated with a 70°F minimum condensing temperature with an ambient-following control strategy and variable speed control of all condenser fans. DOE-2.2R simulation keywords explicitly apply the subject control strategy.

The assumed specific-efficiency rating basis is 95°F ambient drybulb temperature and 105 °F saturated condensing temperature for air-cooled condensers, and 70°F ambient wetbulb temperature and 100°F saturated condensing temperature for evaporative condensers.

4.2.1 Incremental analysis results

For each evaluated condenser type, the condenser specific efficiency was incrementally increased until the cost-effectiveness of subsequent incremental improvements was no longer justified (based on Life-Cycle Costing methodology). The final specific efficiency increment became the proposed specific efficiency. The preliminary analysis was evaluated in climate zones CTZ05 (Santa Maria), and CTZ12 (Sacramento). Figure 14 summarizes the results from the preliminary analysis.

Condenser Type	Cost-effective minimum specific efficiency ((Btu/h)/W)	Basis of comparison for incremental analysis ((Btu/h)/W)	Base Case specific efficiency for state-wide analysis ((Btu/h)/W)
Air-Cooled	65 (Btu/h)/W	55 (Btu/h)/W	53 (Btu/h)/W

Evaporative-Cooled	160 (Btu/h)/W	140 (Btu/h)/W	155 (Btu/h)/W

Figure 14: Preliminary condenser specific efficiency results

The base case specific efficiency for state-wide savings analysis listed in Figure 14 is the average of condensers installed on new supermarket projects in California between 2006 and 2010 (those which were below the cost-effective specific efficiency), obtained from Savings By Design new construction projects. The data for the state-wide analysis base case is included in Appendix G.

4.2.2 Analysis of results by climate zone

Figure 15 below summarizes the simulation results for the condenser specific efficiency measure simulated in all ten climate zones:

	Energy Savings (kWh)	Energy Savings/ SF (kWh)	TDV Cost Savings ($)	TDV Cost Savings /SF ($)	Measure Cost plus Maintenance Cost ($)	Benefit/ Cost Ratio
SXX Average	2,282	0.13	$14,214	$0.87	$1,656	26.54
MXX Average	7,483	0.12	$20,161	$0.33	$3,599	13.45
LXX Average	8,728	0.06	$27,115	$0.18	$5,696	9.35
XAX Average	7,069	0.12	$23,949	$0.53	$5,526	6.54
XEX Average	3,529	0.05	$9,055	$0.22	$795	50.13
XFX Average	2,282	0.13	$14,214	$0.87	$1,656	26.54
All Averages						
Arcata	1,507	0.028	$3,353	$0.06	$3,571	3.72
Oakland	2,181	0.040	$5,533	$0.10	$3,571	4.29
Santa Maria	2,438	0.040	$4,569	$0.08	$3,571	4.01
San Diego-Lindbergh	2,937	0.054	$6,586	$0.12	$3,571	4.65
Fullerton	3,268	0.058	$10,472	$0.18	$3,901	5.21
Riverside	5,353	0.093	$19,110	$0.32	$3,901	6.94
Sacramento	4,540	0.079	$17,493	$0.29	$3,901	6.55
Fresno	6,692	0.114	$21,812	$0.36	$3,901	7.47
Palmdale	6,629	0.113	$21,694	$0.36	$3,901	7.15
Palm Springs	13,409	0.225	$33,395	$0.55	$3,901	10.32
Maximum	26,006	0.35	$ 66,062	$ 0.86	$ 9,862	24.70
Minimum	386	0.01	$ 756	$ 0.02	$ 79	0.32

Figure 15: State-wide energy analysis summary for condenser specific efficiency measure

The specific efficiency requirements are generally cost-effective in warmer climate zones: Fullerton, Riverside, Sacramento, Fresno, Palmdale, and Palm Springs. Note that outdoor halocarbon air-cooled

condensers equipped with brushless DC (BLDC) motors were considered as well as condensers with "standard" induction motors. Nearly all air-cooled halocarbon condenser manufacturers offer condensers with BLDC fan motors, which are more expensive but have the advantage of inherently variable-speed with the application of a control signal, eliminating the need for a variable speed drive. As noted previously, for these condensers the maximum speed (and therefore the specific efficiency) is effectively a factory-settable parameter. Four climate zones have a Benefit-to-Cost ratio (B/C) less than 1.0 for air-cooled BLDC condensers in some store sizes. In one climate zone, Arcata, BLDC equipped air-cooled condensers are not cost-effective for any prototype or configuration.

Because condensers can be purchased with standard fan motors (i.e. using BLDC motors is an elective design choice) and be cost effective at the proposed specific efficiency level in all climate zones, the examples below BC=1.0 does not justify establishing climate-specific exceptions to the standard.

An important observation is that several manufacturers have recently introduced new air-cooled condensers using "micro-channel" heat exchanger surface. This is a major technology change which is currently evolving. Initial information indicates these condensers will have markedly higher specific efficiencies than the current condenser designs; particularly better than the condensers using EC motors with standard condenser surface, which generally were found to have the lowest specific efficiency of all air-cooled condensers. Assuming the micro-channel condensers become dominant in the market, the proposed condenser efficiency will potentially be met quite easily and at lower cost than the assumptions in this study.

Some configurations and condensing types were shown to be not cost-effective in cooler climate zones. Figure 16 shows the analysis results for prototypes, system configurations, and condenser types that had benefit/cost ratios less than one. The results in Figure 16 exclude air-cooled condensers with BLDC motors, for reasons previously mentioned.

	Energy Savings (kWh)	Energy Savings/ SF (kWh)	TDV Cost Savings ($)	TDV Cost Savings /SF ($)	Measure Cost ($)	Benefit/ Cost Ratio
CTZ01 – Arcata						
SAD-Non-EC	431	0.03	$979	$0.06	$1,103	0.89
LAC-Non-EC	1,897	0.01	$4,414	$0.03	$5,540	0.80
LAD-Non-EC	1,334	0.01	$2,857	$0.02	$5,636	0.51
CTZ03 – Oakland						
LAD-Non-EC	1,828	0.01	$4,993	$0.03	$5,636	0.89
CTZ05 – Santa Maria						
LAD-Non-EC	4,759	0.03	$3,943	$0.02	$5,636	0.70

Figure 16: Analysis results for prototypes, system configurations, and condenser types with benefit/cost ratios less than 1

The coldest climate zone shown in Figure 16, Arcata, has the most configurations with benefit/cost ratios less than one. The weather in this climate zone is cool enough on average that the saturated condensing temperature is rarely above the minimum setting for any prototype, condensing type, or

system configuration—mitigating the positive effects of increased condenser efficiency. In the remaining two climate zones from Figure 16, the big-box store prototype with distributed compressor suction groups and air-cooled condensers (designated LAD in the results table) is the only configuration shown to have benefit/cost ratios less than one. Based on the example store designs chosen as base case references, the condensers sizing for distributed systems was generally somewhat larger (smaller TD) than central system condensers, and are therefore more lightly-loaded for most of the year. For all prototypes and all climate zones, with all other parameters held constant, the benefit/cost ratio for the distributed configurations are always slightly less than the central-system counterparts. This difference is more likely artifact of the available examples than a consistent difference in design practice for the respective condensers and systems, and thus the low benefit/cost ratio for the single configuration in CTZ03 and CTZ05 would likely be resolved through more precise condenser selections. On the other hand, the low cost effectiveness is seen for multiple configurations in CTZ01.

The proposed code requirement includes minimum specific efficiencies for air-cooled and evaporative condensers except for climate zone CTZ01. A minimum size for this requirement was considered since fewer options are available for small condensers and the cost to manufacturers and owners to comply with the requirements may be high compared with the small savings and small sales volume. Condensers with a design Heat of Rejection capacity less than 150 MBH will be exempt. Very few supermarkets would use a condenser below this size limit.

4.3 Floating Suction Pressure

This measure evaluates the cost-effectiveness of floating suction pressure automation for parallel compressor groups. With fixed suction control, the suction group setpoint is maintained constantly at the lowest pressure required to meet maximum fixture cooling loads (during peak temperature, humidity and shopper traffic) or to meet the peak walk-in loads, which are generally infrequent. With floating suction pressure, the setpoint is automatically adjusted based on walk-in or case temperature requirements, such that the pressure is no lower than necessary to meet the most demanding fixture or walk-in load. Energy savings result from operating at higher saturated suction temperatures on average, reducing lift and compressor power.

The Base Case control strategy for this measure is fixed setpoint with electronic sequencing of compressors. The Base Case SST setpoint was assumed to be the design SST for each suction group, minus two degrees for LT systems and four degrees for MT systems, to account for typical line losses and the effect of normal compressor cycling; since compressor systems have finite steps of capacity, whether they employ uneven compressors, cylinder unloaders, etc.

Figure 17 describes the design compressor groups, the design suction temperatures and the simulation setpoints for each suction group in the refrigeration simulation study.

Supermarket Prototype	Suction Group	Design SST (°F)	SST Setpoint (°F) for Simulation
Small Supermarket	ALT	-25°F	-27°F
	BMT	21°F	17°F
Large Supermarket	AMT	18°F	14°F
	BMT	16°F	12°F
	CLT	-22°F	-24°F

Big-Box Food Store	AMT	-29°F	-31°F
	BLT	18°F	14°F
	CMT	-29°F	-31°F
	DLT	18°F	14°F

Figure 17: Suction group design SST and Base Case SST setpoints

To simulate the measure, the suction temperature setpoint was allowed to float high enough to meet the most demanding load on the suction group. The suction temperature is also restricted to a specified range. The minimum allowed suction temperature was assumed to be the Base Case suction temperature setpoint, with a maximum float of five degrees assumed in the simulation analysis.

4.3.1 Analysis results by climate zone

The suction temperature control measure was evaluated for all system types and in all climate zones. Figure 18 below summarizes the simulation results for the floating suction pressure measure:

	Energy Savings (kWh)	Energy Savings/ SF (kWh)	TDV Cost Savings ($)	TDV Cost Savings /SF ($)	Measure Cost plus Maintenance Cost ($)	Benefit/ Cost Ratio
SXX Average	8,428	0.53	$16,508	$1.04	$5,075	3.25
MXX Average	33,799	0.57	$65,475	$1.10	$10,149	6.45
LXX Average	50,213	0.31	$98,996	$0.61	$10,149	9.75
XAX Average	30,047	0.46	$60,311	$0.93	$8,458	7.13
XEX Average	26,407	0.39	$50,531	$0.75	$8,458	5.97
XFX Average	33,782	0.51	$65,240	$0.99	$8,458	7.71

All Average						
Arcata	28,549	0.44	$54,689	$0.841	$8,458	6.47
Oakland	29,510	0.45	$57,071	$0.874	$8,458	6.75
Santa Maria	29,299	0.45	$56,655	$0.868	$8,458	6.70
San Diego-Lindbergh	29,996	0.46	$58,013	$0.891	$8,458	6.86
Fullerton	30,339	0.46	$58,700	$0.889	$8,458	6.94
Riverside	31,196	0.47	$61,242	$0.926	$8,458	7.24
Sacramento	30,864	0.47	$61,459	$0.932	$8,458	7.27
Fresno	31,935	0.49	$63,559	$0.963	$8,458	7.51
Palmdale	31,286	0.47	$61,882	$0.932	$8,458	7.32
Palm Springs	35,156	0.53	$69,995	$1.055	$8,458	8.28

Maximum	65,726	0.74	$ 129,036	$ 1.59	$ 10,149	12.71
Minimum	6,458	0.24	$ 12,317	$ 0.47	$ 5,075	2.43

Figure 18: Statewide savings results for floating suction pressure

The results table shows that the minimum benefit/cost ratio for any prototype, system configuration, or condenser type is 2.4—floating suction pressure is therefore considered cost-effective for all system configurations and in all climate zones. This measure is minimally sensitive to climate conditions.

The control logic for floating suction pressure is already included in nearly all supermarket rack controllers. Furthermore, computer control of temperatures in the display cases and walk-ins is also a standard feature. Typically, no additional hardware is required to achieve floating suction pressure control (minimal wiring and temperature sensor costs were included in the overall measure cost to evaluate the most expensive case). The cost for this measure primarily consists of labor costs to commission and fine-tune the controls, plus the 15-year present value of maintenance, ongoing fine-tuning, and setpoint verification.

The proposed code requirement consists of mandatory floating suction pressure control automation on all systems with multiple compressors, or single compressor systems with variable capacity capability. Since floating suction pressure can conflict with maintaining humidity in preparation areas, and because the systems which serve preparation areas are often also used primarily for mechanical subcooling (which is generally not compatible with floating suction pressure), the requirement will be limited to systems with a design SST below 30°F. Exceptions will apply to compressor groups attached primarily to secondary-loop chillers or that serve the high stage of cascaded refrigeration system.

Naturally, floating suction requires that the suction pressure control logic acts to increase the suction pressure before the cooling effect is otherwise reduced, by operation of a liquid solenoid or the setpoint of a suction regulator. This sort of control integration has been accomplished by most control vendors, and is generally understood and addressed during the commissioning of floating suction pressure control. In addition, for suction groups serving walk-in boxes with evaporator fan speed control, the control automation would need to prioritize fan speed reduction *before* allowing suction temperature to float. Walk-in evaporator coil fan speed control is analyzed later in this section.

4.4 Mechanical Subcooling

This measure evaluates the cost-effectiveness of mechanical subcooling for the low temperature parallel compressor systems. Mechanical subcooling involves cooling the liquid refrigerant after it has been condensed, using capacity from a higher-temperature compressor group or by using a built-in economizer port, which are common on low temperature scroll and screw compressors in the size ranges typically employed in supermarkets.

For each of the refrigeration system configurations, mechanical subcooling of the low-temperature suction group(s) was assumed to be accomplished by a medium-temperature group, with the exception of distributed systems, which were assumed to employ scroll compressor economizer ports. A two psi liquid pressure drop was assumed in the subcooler, and 5°F of heat gain was assumed in the subcooled liquid line between the compressor system and the cases or walk-ins. Both the Baseline case and the measure simulation assumed floating head pressure control of the condenser fans, with a 70°F minimum condensing temperature, ambient-following SCT control logic, and variable-speed condenser fans.

4.4.1 Analysis results by climate zone

The mechanical subcooling measure was evaluated for all system types and in all climate zones. Figure 19 below summarizes the simulation results for the mechanical subcooling measure:

	Energy Savings (kWh)	Energy Savings/ SF (kWh)	TDV Cost Savings ($)	TDV Cost Savings /SF ($)	Measure Cost plus Maintenance Cost ($)	Benefit/ Cost Ratio
SXX Average	9,012	0.57	$18,543	$1.17	$4,475	4.14
MXX Average	25,483	0.43	$53,461	$0.90	$7,973	6.71
LXX Average	65,849	0.41	$137,909	$0.85	$14,221	9.70
XAX Average	26,748	0.37	$64,115	$0.87	$8,694	7.37
XEX Average	26,739	0.37	$51,989	$0.71	$9,673	5.37
XFX Average	43,502	0.62	$84,818	$1.20	$8,694	9.76
All Average						
Arcata	28,837	0.41	$54,668	$0.772	$8,890	6.15
Oakland	29,735	0.42	$58,467	$0.815	$8,890	6.58
Santa Maria	29,532	0.42	$57,315	$0.800	$8,890	6.45
San Diego-Lindbergh	31,193	0.44	$62,173	$0.866	$8,890	6.99
Fullerton	32,359	0.46	$66,352	$0.946	$8,890	7.46
Riverside	34,136	0.48	$74,327	$1.025	$8,890	8.36
Sacramento	33,135	0.46	$72,075	$0.996	$8,890	8.11
Fresno	35,542	0.49	$77,962	$1.076	$8,890	8.77
Palmdale	34,923	0.48	$75,368	$1.036	$8,890	8.48
Palm Springs	45,087	0.62	$101,004	$1.397	$8,890	11.36
Maximum	114,292	0.87	$259,844	$2.341	$15,793	20.85
Minimum	4,006	0.14	$7,645	$0.255	$4,220	1.81

Figure 19: Statewide savings results for mechanical subcooling measure

The analysis shows that mechanical subcooling is cost-effective for all system configurations and in all climate zones.

The proposed code requirement consists of mandatory liquid subcooling for low temperature parallel compressor systems, maintained continuously at 50°F or less, using compressor economizer port(s) or a separate parallel suction group operating at medium or high temperature conditions. Exceptions will apply to: single-compressor systems since these may often employ compressors without economizers (i.e. reciprocating) and be remotely located from other systems; and cascade systems since the condensing temperature is already at a much lower temperature.

4.5 Display Case Lighting Control

This measure evaluates the cost-effectiveness of automatic controls to turn off display case lights during non-business hours, and is applicable to stores that are not open 24 hours per day. Evaluation of this measure involves a Baseline modification of the assumed business and stocking hours (assumed to be 10 AM to 8 PM), which directly impact the simulated employee and customer schedules, lighting schedules, and case infiltration schedules. Display case lights are assumed always on in the Base Case, even for a non-24 hour store, which is typical for as significant fraction of supermarkets.

4.5.1 Analysis results by climate zone

The display case lighting control measure was evaluated for all system types and in all climate zones. Figure 20 summarizes the simulation results for the display case lighting control measure:

	Energy Savings (kWh)	Energy Savings/ SF (kWh)	TDV Cost Savings ($)	TDV Cost Savings /SF ($)	Measure Cost plus Maintenance Cost ($)	Benefit/ Cost Ratio
SXX Average	49,627	3.13	$69,134	$4.36	$5,588	12.37
MXX Average	149,814	2.52	$219,138	$3.68	$11,321	19.36
LXX Average	173,263	1.07	$265,992	$1.64	$12,659	21.01
XAX Average	122,362	2.21	$181,772	$3.18	$9,856	18.44
XEX Average	121,355	2.19	$180,092	$3.15	$9,856	18.27
XFX Average	127,547	2.29	$190,068	$3.31	$9,856	19.28
All Average						
Arcata	121,760	2.20	$182,231	$3.189	$9,856	18.49
Oakland	122,526	2.21	$181,454	$3.173	$9,856	18.41
Santa Maria	122,016	2.20	$182,338	$3.183	$9,856	18.50
San Diego-Lindbergh	125,402	2.26	$189,148	$3.292	$9,856	19.19
Fullerton	124,593	2.24	$184,423	$3.209	$9,856	18.71
Riverside	124,596	2.24	$182,220	$3.174	$9,856	18.49
Sacramento	123,529	2.22	$184,090	$3.210	$9,856	18.68
Fresno	125,199	2.26	$187,412	$3.293	$9,856	19.01
Palmdale	124,213	2.24	$182,442	$3.195	$9,856	18.51
Palm Springs	128,513	2.31	$191,788	$3.356	$9,856	19.46
Maximum	185,047	3.29	$285,101	$4.623	$12,659	22.52
Minimum	47,749	1.02	$66,267	$1.552	$5,588	11.86

Figure 20: State-wide savings results for display case lighting control measure

The analysis shows that display case lighting control is cost-effective for all system configurations and in all climate zones.

The proposed code requirement consists of mandatory control for lighting in refrigeration display cases and lights in point-of-sale box doors in supermarkets, to automatically turn off lighting during non-business hours. Since display cases are often stocked at night or before store hours, the controls may include automatic or manual-enabled override intervals to allow for stocking.

4.6 Liquid-Suction Heat Exchangers

This measure evaluates the feasibility and cost-effectiveness of high-performance liquid-suction heat exchangers (LSHXs) on display cases and walk-ins. A LSHX subcools the liquid refrigerant entering a refrigeration circuit load (either a walk-in evaporator coil or display case lineup) using the relatively cold suction gas exiting the case or walk-in, increasing the capacity of the liquid refrigerant to perform useful refrigeration. Since most systems have a substantial amount of non-productive parasitic heat gain (i.e. superheat) between the load and the compressor, the LSHX essentially recovers capacity that would otherwise be lost. The subcooling provided by the LSHXs also helps maintain system stability by minimizing flash gas at the expansion valve.

A number of Baseline adjustments were made to achieve an accurate performance evaluation for this measure. The basis of comparison for liquid-suction heat exchangers was a system with floating head pressure to a 70°F minimum SCT with variable-speed condenser fan control with variable-setpoint (ambient-following) control logic, as well as mechanical subcooling of the low-temperature systems as described previously.

Liquid-suction heat exchangers were simulated as having both a subcooling effect on liquid refrigerant temperatures, as well as a superheating effect on the suction vapor returning to the compressor—with the associated impacts on mass-flow pumping efficiency. Figure 21 and Figure 22 illustrate the suction vapor superheat assumptions for both the Base Case and the LSHX for MT and LT systems, respectively, while Figure 23 describes the assumed LSHX sizing for this analysis. Sizing is based on R-404A refrigerant.

	Base Case	**LSHX Case**
Saturated Evaporating Temperature (SET)	17°F	Same as Base Case
Productive Superheat in Evaporator Coil and Case/Walk-In	8°F	Same as Base Case
Leaving Evaporator Coil Gas Temperature	25°F	Same as Base Case
Return Gas Temperature at Compressor Inlet	40°F (central systems), 35°F (distributed systems)	48°F (15°F superheat in LSHX, 8°F non-productive superheat after LSHX)

Figure 21: Suction line heat gain assumptions (MT systems)

	Base Case	**LSHX Case**
Saturated Evaporating Temperature (SET)	-22°F	Same as Base Case
Productive Superheat in Evaporator Coil and Case/Walk-In	10°F	Same as Base Case
Leaving Evaporator Coil Gas Temperature	-12°F	Same as Base Case

Return Gas Temperature at Compressor Inlet	23°F (central systems), 18°F (distributed systems)	35°F (35°F superheat in LSHX, 12°F non-productive superheat after LSHX)

Figure 22: Suction line heat gain assumptions (LT systems)

Suction Group	Liquid Subcooling	Suction Gas Superheat
Low-Temperature (LT)	17°F	35°F
Medium-Temperature (MT)	7°F	15°F

Figure 23: LSHX sizing assumptions for cost and performance

4.6.1 Analysis results by climate zone

The liquid-suction heat exchanger (LSHX) measure was evaluated separately for medium temperature walk-ins, low temperature walk-ins, medium temperature display cases, and low-temperature display cases for all system types and in all climate zones. Figure 24 through Figure 27 below summarize the simulation results for the LSHX measures:

	Energy Savings (kWh)	Energy Savings/ SF (kWh)	TDV Cost Savings ($)	TDV Cost Savings /SF ($)	Measure Cost ($)	Benefit/ Cost Ratio
SXX Average	251	0.02	$ 439	$ 0.03	$ 282	1.56
MXX Average	1,686	0.03	$ 3,618	$ 0.06	$ 1,801	2.01
LXX Average	8,352	0.05	$ 18,254	$ 0.11	$ 3,401	5.37
XAX Average	3,100	0.03	$ 7,073	$ 0.06	$ 1,828	3.87
XEX Average	3,137	0.03	$ 6,550	$ 0.06	$ 1,828	3.58
XFX Average	3,905	0.04	$ 8,245	$ 0.08	$ 1,828	4.51
All Average						
Arcata	2,480	0.02	$ 5,067	$ 0.05	$ 1,828	2.77
Oakland	2,888	0.03	$ 6,102	$ 0.05	$ 1,828	3.34
Santa Maria	2,823	0.03	$ 5,887	$ 0.05	$ 1,828	3.22
San Diego-Lindbergh	3,445	0.03	$ 7,262	$ 0.06	$ 1,828	3.97
Fullerton	3,602	0.03	$ 7,660	$ 0.07	$ 1,828	4.19
Riverside	3,651	0.03	$ 8,044	$ 0.07	$ 1,828	4.40
Sacramento	3,366	0.03	$ 7,460	$ 0.07	$ 1,828	4.08
Fresno	3,670	0.03	$ 8,157	$ 0.07	$ 1,828	4.46
Palmdale	3,422	0.03	$ 7,589	$ 0.07	$ 1,828	4.15
Palm Springs	4,948	0.05	$ 11,144	$ 0.10	$ 1,828	6.10
Maximum	13,990	0.09	$ 32,137	$ 0.20	$ 3,401	9.45
Minimum	-193	-0.01	$ (756)	$ (0.05)	$ 282	-2.68

Figure 24: State-wide savings analysis for liquid-suction heat exchangers (MT Walk-Ins)

	Energy Savings (kWh)	Energy Savings/ SF (kWh)	TDV Cost Savings ($)	TDV Cost Savings /SF ($)	Measure Cost ($)	Benefit/ Cost Ratio
SXX Average	607	0.04	$1,252	$0.08	$452	2.77
MXX Average	4,491	0.08	$8,943	$0.15	$718	12.46
LXX Average	46,961	0.29	$93,788	$0.58	$5,263	17.82
XAX Average	16,119	0.12	$33,067	$0.25	$2,144	15.42
XEX Average	16,878	0.13	$33,190	$0.26	$2,144	15.48
XFX Average	18,825	0.15	$36,990	$0.29	$2,144	17.25
All Average						
Arcata	15,192	0.12	$29,343	$0.227	$2,144	13.69
Oakland	16,157	0.13	$31,666	$0.246	$2,144	14.77
Santa Maria	15,957	0.12	$31,218	$0.242	$2,144	14.56
San Diego-Lindbergh	17,518	0.14	$34,723	$0.272	$2,144	16.19
Fullerton	17,726	0.14	$35,071	$0.274	$2,144	16.36
Riverside	17,826	0.14	$35,934	$0.280	$2,144	16.76
Sacramento	17,148	0.13	$34,877	$0.272	$2,144	16.27
Fresno	17,970	0.14	$36,521	$0.284	$2,144	17.03
Palmdale	17,333	0.13	$35,070	$0.272	$2,144	16.36
Palm Springs	20,703	0.16	$42,187	$0.325	$2,144	19.67
Maximum	64,175	0.40	$138,790	$0.856	$5,263	26.37
Minimum	446	0.03	$863	$0.054	$452	1.91

Figure 25: State-wide savings analysis for liquid-suction heat exchangers (LT Walk-Ins)

	Energy Savings (kWh)	Energy Savings/ SF (kWh)	TDV Cost Savings ($)	TDV Cost Savings /SF ($)	Measure Cost ($)	Benefit/ Cost Ratio
SXX Average	3,536	0.22	$7,507	$0.47	$1,577	4.76
MXX Average	15,663	0.26	$33,934	$0.57	$6,710	5.06
LXX Average	2,329	0.01	$5,052	$0.03	$840	6.02
XAX Average	5,962	0.14	$13,710	$0.32	$3,042	4.51
XEX Average	6,761	0.16	$13,843	$0.32	$3,042	4.55
XFX Average	8,597	0.20	$18,113	$0.42	$3,042	5.95

All Average						
Arcata	5,680	0.13	$11,327	$0.267	$3,042	3.72
Oakland	6,339	0.15	$13,073	$0.307	$3,042	4.30
Santa Maria	6,155	0.14	$12,527	$0.294	$3,042	4.12
San Diego-Lindbergh	7,766	0.18	$16,232	$0.378	$3,042	5.34
Fullerton	7,607	0.17	$16,138	$0.370	$3,042	5.30
Riverside	7,562	0.18	$16,720	$0.387	$3,042	5.50
Sacramento	7,022	0.16	$15,660	$0.362	$3,042	5.15
Fresno	7,559	0.17	$16,911	$0.387	$3,042	5.56
Palmdale	6,600	0.15	$14,719	$0.338	$3,042	4.84
Palm Springs	9,466	0.22	$21,671	$0.492	$3,042	7.12

Maximum	24,007	0.40	$52,944	$0.889	$6,710	11.88
Minimum	1,307	0.01	$2,385	$0.015	$840	2.26

Figure 26: State-wide savings analysis for liquid-suction heat exchangers (MT display cases)

	Energy Savings (kWh)	**Energy Savings/ SF (kWh)**	**TDV Cost Savings ($)**	**TDV Cost Savings /SF ($)**	**Measure Cost ($)**	**Benefit/ Cost Ratio**
SXX Average	7,344	0.46	$14,339	$0.90	$1,095	13.10
MXX Average	23,222	0.39	$46,457	$0.78	$2,592	17.92
LXX Average	10,781	0.07	$21,543	$0.13	$2,953	7.30
XAX Average	12,269	0.28	$25,085	$0.56	$2,213	11.33
XEX Average	13,261	0.29	$25,839	$0.57	$2,213	11.67
XFX Average	15,557	0.34	$30,611	$0.67	$2,213	13.83

All Average						
Arcata	12,345	0.28	$23,747	$0.532	$2,213	10.73
Oakland	13,066	0.29	$25,528	$0.569	$2,213	11.53
Santa Maria	12,890	0.29	$25,050	$0.560	$2,213	11.32
San Diego-Lindbergh	14,394	0.32	$28,375	$0.624	$2,213	12.82
Fullerton	14,047	0.31	$27,867	$0.610	$2,213	12.59
Riverside	14,045	0.31	$28,418	$0.625	$2,213	12.84

Sacramento	13,482	0.30	$27,503	$0.606	$2,213	12.43
Fresno	14,143	0.31	$28,741	$0.631	$2,213	12.98
Palmdale	13,396	0.30	$27,140	$0.600	$2,213	12.26
Palm Springs	16,018	0.35	$32,093	$0.701	$2,213	14.50
Maximum	30,598	0.57	$60,349	$1.179	$2,953	23.28
Minimum	5,896	0.05	$11,018	$0.096	$1,095	5.26

Figure 27: State-wide savings analysis for liquid-suction heat exchangers (LT display cases)

The results tables show that the benefit/cost ratio for all system configurations and in all climate zones for all LSHX types is greater than 1—with the exception of certain MT walk-in LSHXs in small stores. Medium-temperature walk-in LSHX simulations with benefit/cost ratios less than 1 are shown in Figure 28.

	Configuration	Energy Savings (kWh)	Energy Savings/ SF (kWh)	TDV Cost Savings ($)	TDV Cost Savings /SF ($)	Measure Cost ($)	Benefit/ Cost Ratio
	SAC	158	0.01	$214	$0.013	$282	0.76
Arcata	SAD	129	0.01	$267	$0.017	$282	0.95
Oakland	SAC	195	0.00	-$409	-$0.026	$282	-1.45
Santa Maria	SAC	16	0.00	-$436	-$0.028	$282	-1.55
San Diego-Lindbergh	SAC	-193	-0.01	-$756	-$0.048	$282	-2.68
Fullerton	SAC	245	0.02	-$214	-$0.013	$282	-0.76
Riverside	SAC	278	0.02	-$18	-$0.001	$282	-0.06
Sacramento	SAC	245	0.02	-$214	-$0.013	$282	-0.76
Fresno	SAC	18	0.00	-$667	-$0.042	$282	-2.36
Palmdale	SAC	95	0.01	-$445	-$0.028	$282	-1.58
Palm Springs	SAC	65	0.00	-$36	-$0.002	$282	-0.13

Figure 28: MT walk-in LSHX simulations with BCR<1.0

Figure 28 shows the small supermarket prototype with air-cooled central systems not cost-effective in any simulated climate zone. The small supermarket medium-temperature walk-in boxes are all small, compared to the large supermarket and big-box store which both have a variety of small and large MT walk-ins. LSHX purchase price is non-linear with relation to capacity, and there is a size threshold for walk-in boxes where the savings benefit does not justify the cost.

To further investigate this point, Figure 25 shows a breakdown of LSHX results for individual MT walk-ins. The results are for the large supermarket prototype, since the large supermarket has the most variety of MT walk-in sizes.

Walk-In	Area (SF)	Savings (kWh/SF)	TDV Savings ($TDV)	LSHX Cost ($)	B/C Ratio
CTZ01 - Arcata					

Deli Cooler	64	28.6	$66	$149	0.44
Bakery Retarder	70	31.3	$72	$151	0.48
Meat Holding	91	40.7	$93	$155	0.60
Wine Cooler	121	54.1	$124	$160	0.78
Produce Cooler	400	179.0	$411	$199	2.07
Meat Cooler	540	241.6	$554	$224	2.47
Dairy Cooler	656	293.5	$673	$241	2.79
All WI	1942	869.0	$1,994	$1,801	1.11
CTZ03 - Oakland					
Deli Cooler	64	40.9	$101	$149	0.67
Bakery Retarder	70	44.7	$110	$151	0.73
Meat Holding	91	58.2	$143	$155	0.93
Wine Cooler	121	77.3	$190	$160	1.19
Produce Cooler	400	255.6	$629	$199	3.17
Meat Cooler	540	345.1	$849	$224	3.78
Dairy Cooler	656	419.2	$1,031	$241	4.28
All WI	1942	1241.0	$3,053	$1,801	1.69
CTZ05 - Santa Maria					
Deli Cooler	64	39.0	$94	$149	0.63
Bakery Retarder	70	42.7	$103	$151	0.69
Meat Holding	91	55.5	$134	$155	0.87
Wine Cooler	121	73.8	$179	$160	1.12
Produce Cooler	400	243.9	$590	$199	2.97
Meat Cooler	540	329.2	$797	$224	3.55
Dairy Cooler	656	400.0	$968	$241	4.02
All WI	1942	1184.0	$2,866	$1,801	1.59
CTZ07 - San Diego/Lindbergh					
Deli Cooler	64	63.7	$143	$149	0.96
Bakery Retarder	70	69.6	$156	$151	1.04
Meat Holding	91	90.5	$203	$155	1.31
Wine Cooler	121	120.4	$270	$160	1.69
Produce Cooler	400	397.9	$893	$199	4.50
Meat Cooler	540	537.2	$1,205	$224	5.37
Dairy Cooler	656	652.6	$1,464	$241	6.07
All WI	1942	1932.0	$4,334	$1,801	2.41
CTZ08 - Fullerton					

Deli Cooler	64	65.5	$142	$149	0.95
Bakery Retarder	70	71.6	$156	$151	1.03
Meat Holding	91	93.1	$202	$155	1.31
Wine Cooler	121	123.8	$269	$160	1.68
Produce Cooler	400	409.3	$889	$199	4.48
Meat Cooler	540	552.5	$1,200	$224	5.35
Dairy Cooler	656	671.2	$1,458	$241	6.05
All WI	1942	1987.0	$4,316	$1,801	2.40
CTZ10 - Riverside					
Deli Cooler	64	62.2	$132	$149	0.88
Bakery Retarder	70	68.1	$144	$151	0.96
Meat Holding	91	88.5	$187	$155	1.21
Wine Cooler	121	117.6	$249	$160	1.56
Produce Cooler	400	388.9	$823	$199	4.14
Meat Cooler	540	525.0	$1,111	$224	4.95
Dairy Cooler	656	637.8	$1,350	$241	5.60
All WI	1942	1888.0	$3,996	$1,801	2.22
CTZ12 - Sacramento					
Deli Cooler	64	52.5	$111	$149	0.74
Bakery Retarder	70	57.4	$121	$151	0.80
Meat Holding	91	74.6	$157	$155	1.02
Wine Cooler	121	99.3	$209	$160	1.31
Produce Cooler	400	328.1	$691	$199	3.48
Meat Cooler	540	443.0	$933	$224	4.16
Dairy Cooler	656	538.1	$1,133	$241	4.70
All WI	1942	1593.0	$3,355	$1,801	1.86
CTZ13 - Fresno					
Deli Cooler	64	61.3	$132	$149	0.88
Bakery Retarder	70	67.0	$144	$151	0.96
Meat Holding	91	87.1	$188	$155	1.21
Wine Cooler	121	115.8	$250	$160	1.56
Produce Cooler	400	382.9	$825	$199	4.15
Meat Cooler	540	516.9	$1,114	$224	4.96
Dairy Cooler	656	628.0	$1,353	$241	5.61
All WI	1942	1859.0	$4,005	$1,801	2.22
CTZ14 - Palmdale					

Deli Cooler	64	52.8	$110	$149	0.73
Bakery Retarder	70	57.7	$120	$151	0.80
Meat Holding	91	75.0	$156	$155	1.01
Wine Cooler	121	99.8	$207	$160	1.30
Produce Cooler	400	329.8	$686	$199	3.45
Meat Cooler	540	445.2	$926	$224	4.13
Dairy Cooler	656	540.8	$1,124	$241	4.66
All WI	1942	1601.0	$3,328	$1,801	1.85
CTZ15 - Palm Springs					
Deli Cooler	64	85.9	$194	$149	1.30
Bakery Retarder	70	94.0	$212	$151	1.41
Meat Holding	91	122.2	$276	$155	1.79
Wine Cooler	121	162.5	$367	$160	2.30
Produce Cooler	400	537.2	$1,214	$199	6.11
Meat Cooler	540	725.2	$1,638	$224	7.30
Dairy Cooler	656	881.0	$1,990	$241	8.26
All WI	1942	2608.0	$5,892	$1,801	3.27

Figure 29: MT LSHX results by walk-in with results and BCR on a per-SF basis

Figure 29 shows that, for walk-in boxes less than approximately 150 square feet, liquid suction heat exchangers are generally not cost-effective for MT walk-ins.

Stakeholders noted that with certain refrigerants (notably R-407x) compressors were sensitive to return gas temperatures (RGT) and that an increase in RGT as a result of adding LSHXs could potentially cause excessively high compressor temperatures and premature compressor failure for low-temperature suction groups. In order to address this concern, the measure costs in the results tables for LT walk-ins and LT display cases include an additional ¼" of suction line insulation thickness. The additional suction line insulation would reduce non-productive suction line heat gain between the load and the compressor, and offset the effect of the LSHX.

The simulation analysis for the LSHX measure was conducted with the Base Case refrigerant for each of the prototype supermarkets (R-404A and R-507). Figure 30 shows the calculated liquid subcooling and concurrent suction vapor superheat for equal-sized LSHXs for other refrigerants, which are also in use or being considered.

	Liquid Subcooling with Concurrent 15°F of Superheat (MT Systems)	**Liquid Subcooling with Concurrent 35°F of Superheat (LT Systems)**
R-404A/507	7°F	17°F
R-407A	9°F	19°F
R-410A	9°F	19°F

Figure 30: Liquid subcooling for R-404A, R-507, R-407A, and R-410A with equal-sized LSHXs

Figure 30 shows that the magnitude of subcooling for R-407A and R-410A is slightly greater for the same degree of superheat as R-404A and R-507. Conversely, suction vapor superheat would be slightly less for R-407A and R-410A than R-404A and R-507 for an equal amount of subcooling, indicating savings and system impacts will be similar with these refrigerants.

The CASE team has received strong industry concern about leakage problems with LSHX. Therefore, despite the potential energy savings and high benefit/cost ratios, we will not propose a mandatory requirement for liquid suction heat exchangers on all display cases and walk-ins. We will continue to dialogue with industry to determine a long term solution to both the energy and the leakage issues.

4.7 Prohibit Open Upright Frozen Food Cases

Low-temperature open upright display cases were compared with low temperature reach-in door doors to evaluate the savings associated with prohibiting the use of open upright low temperature cases. An equal length of open upright and reach-in display cases was compared; although this was a difference noted several years ago, no stakeholders commented that a greater length of glass doors was required to display or "face" the same amount of product.

Figure 31 shows the assumptions for line-up length (or number of doors), fan energy, lighting energy, infiltration assumptions, and anti-sweat heater wattage and controls (for the reach-in case) evaluated in this analysis.

	Open Upright Frozen Food Case	**Low-Temperature Reach-In Display Case with Doors**
Line-Up Length (or Number of Doors)	12 ft	13 ft (5 doors)
Cooling Capacity	17.8 MBH	6.85 MBH
Design Discharge Air Temperature	-5°F	-5°F
Design Saturated Suction Temperature	-22°F	-22°F
Lighting	Total shelf and canopy lights: 173 W	Total vertical door lighting: 369 W
Defrost Assumptions	Hot Gas Defrost, 2x22 minutes/day	Hot Gas Defrost, 1x20 minutes/day
Anti-Sweat Heater Assumptions	288 W Always on	269 W Always on

Figure 31: Analysis assumptions for both open and reach-in display cases

The energy savings was evaluated in CTZ12-Sacramento and only for the large supermarket prototype because the measure is not significant affected by climate zone or store size. Figure 32 shows the analysis results for this measure.

	Energy Savings (kWh)	**Energy Savings/ SF (kWh)**	**TDV Cost Savings ($)**	**TDV Cost Savings /SF ($)**
MAC	7,767	0.13	19,481	$0.33
MAD	9,526	0.16	22,311	$0.37
MEC	9,990	0.17	22,116	$0.37

MFC	11,094	0.19	25,017	$0.42
MFD	11,218	0.19	25,017	$0.42
ALL Average	**9,919**	**0.17**	**22,789**	**$0.38**

Figure 32: Analysis results for reach-in versus open upright frozen food cases

The incremental cost was assumed to be zero, since the two types of display cases have similar costs and the savings in compressor cost and refrigeration piping is easily greater than increased 120 V wiring costs (if any). With no associated incremental costs there is no calculation of benefit/cost ratio.

Stakeholder feedback for this measure was positive, with no situations identified that required the use of open upright low temperature cases in new store construction. Generally, these are rare in current design practice in California other than occasional small (12 to 20 ft.) line-ups of frozen meat, although at least one chain still used a 60-72 ft. line-up of open upright freezers as recently as three years ago.

The proposed code requirement consists of prohibiting open upright low temperature display cases.

4.8 Refrigeration Heat Recovery

This measure consists of using heat recovery from the refrigeration system for space heating.

4.8.1 Analysis results by climate zone

Heat recovery from the refrigeration systems in supermarkets has been employed using many different methods over the past 50 years. Prior to the CFC phase-out, heat recovery provided the majority of heating requirements in most supermarkets. Many configurations can significantly increase refrigerant charge and winter-summer charge variation, generally resulting in greater annual refrigerant losses and associated costs—resulting in a decline in use of heat recovery to the point only a small amount of annual heating needs being met with heat recovery.

The configuration employed to evaluate this measure includes an indirect heat exchange loop, with water-cooled heat-recovery condensers (piped in series with the main condensers) and using a water loop to convey the heat to the air handler(s), rooftop units or unit heaters used to heat the store. A saturated condensing temperature holdback valve with a design holdback SCT of 95°F was assumed on the refrigerant-side of the water-cooled heat recovery condenser(s). Reclaim coils for each system type were sized to recover 65% of the available refrigeration system heat of rejection, with a design temperature difference of 30°F between the reclaim condensing temperature and the design return air temperature.

The baseline of comparison included floating head pressure to 70°F with variable-setpoint (ambient following) control logic and variable speed condenser fan control. The baseline assumes all space heating in the main sales area is accomplished with natural gas furnaces. Figure 33 describes the heat reclaim assumptions utilized in the evaluation of this measure:

	Small Supermarket	**Large Supermarket**	**Big-Box Food Store**
Sales area HVAC system description	Packaged rooftop AC unit with EER per 2008 Title 24	Main air handling unit	Several packaged rooftop AC units with EERs per 2008 Title 24

Circulation pump power	1.5 HP	3 HP	10 HP

Figure 33: Simulation assumptions for heat reclaim measure

The refrigeration heat recovery measure for space heating was evaluated for all system types and in all climate zones. Figure 34 below summarizes the simulation results for the heat recovery measure:

	Energy Savings (kWh)	Energy Savings/ SF (kWh)	Natural Gas Savings (Therms)	Natural Gas Savings /SF (Therms)	TDV Cost Savings ($)	TDV Cost Savings /SF ($)	Measure Cost plus Maintenance Cost ($)	Benefit/ Cost Ratio
SXX Average	-15,885	-1.00	7,573	0.48	$126,510	$7.98	$21,396	5.91
MXX Average	-37,045	-0.62	26,572	0.45	$478,112	$8.03	$69,949	6.84
LXX Average	-94,772	-0.58	35,118	0.22	$540,915	$3.34	$88,378	6.12
XAX Average	-70,370	-1.10	23,006	0.38	$336,229	$5.68	$60,813	5.53
XEX Average	-53,986	-0.80	23,061	0.38	$371,734	$6.31	$57,021	6.52
XFX Average	-25,722	-0.34	23,183	0.38	$432,518	$7.29	$60,446	7.16
All Average								
Arcata	-53,400	-0.78	43,977	0.69	$771,752	$12.35	$59,908	12.88
Oakland	-48,367	-0.70	31,436	0.50	$545,607	$8.88	$59,908	9.11
Santa Maria	-49,166	-0.71	33,001	0.53	$568,282	$9.20	$59,908	9.49
San Diego-Lindbergh	-41,375	-0.59	17,696	0.31	$284,389	$5.27	$59,908	4.75
Fullerton	-46,948	-0.73	16,646	0.32	$256,694	$5.28	$59,908	4.28
Riverside	-49,868	-0.75	16,704	0.28	$257,436	$4.39	$59,908	4.30
Sacramento	-53,112	-0.80	23,756	0.39	$399,091	$6.60	$59,908	6.66
Fresno	-50,693	-0.77	19,960	0.33	$331,549	$5.52	$59,908	5.53
Palmdale	-56,213	-0.86	21,598	0.35	$358,692	$5.91	$59,908	5.99
Palm Springs	-43,199	-0.67	6,096	0.11	$44,962	$1.07	$59,908	0.75
Maximum	84,118	1.41	72,907	0.86	$1,329,152	$18.95	$95,545	15.90
Minimum	-150,070	-1.93	2,250	0.05	-$8,260	$(0.05)	$20,926	-0.10

Figure 34: State-wide savings results for heat recovery measure

The analysis shows that, on average, heat recovery is cost-effective for all system configurations and in all climate zones. However, in Palm Springs, the hottest climate zone, it is not cost-effective for all store types and system configurations. Figure 35 is a summary of analysis results for Palm Springs:

Energy Savings (kWh)	Energy Savings/ SF (kWh)	Natural Gas Savings (Therms)	Natural Gas Savings /SF (Therms)	TDV Electric Cost Savings ($)	TDV Gas Cost Savings ($)	TDV Total Cost Savings ($)	TDV Total Cost Savings	Measure Cost plus Maintenance Cost ($)	Benefit/ Cost Ratio

								/SF ($)		
SAC	-14,987	-0.95	2,250	0.14	$(32,539)	$51,689	$19,150	$1.21	$20,926	0.92
SAD	-15,793	-1.00	2,250	0.14	$(33,933)	$51,689	$17,756	$1.12	$23,202	0.77
SEC	-15,409	-0.97	2,250	0.14	$(33,220)	$51,677	$18,457	$1.16	$20,926	0.88
SFC	-10,655	-0.67	2,251	0.14	$(24,154)	$51,726	$27,572	$1.74	$20,926	1.32
SFD	-10,901	-0.69	2,251	0.14	$(24,265)	$51,726	$27,461	$1.73	$21,000	1.31
MAC	-48,067	-0.81	8,532	0.14	$(105,335)	$194,802	$89,467	$1.50	$66,536	1.34
MAD	-51,536	-0.87	8,532	0.14	$(110,844)	$194,802	$83,958	$1.41	$75,068	1.12
MEC	-47,445	-0.80	8,529	0.14	$(102,926)	$194,728	$91,802	$1.54	$66,536	1.38
MFC	-25,995	-0.44	8,538	0.14	$(61,800)	$194,949	$133,148	$2.24	$66,536	2.00
MFD	-26,917	-0.45	8,538	0.14	$(61,455)	$194,949	$133,494	$2.24	$75,068	1.78
LAC	-83,699	-0.52	7,502	0.05	$(181,108)	$172,848	($8,260)	($0.05)	$83,600	-0.10
LAD	-81,478	-0.50	7,499	0.05	$(176,625)	$172,775	($3,850)	($0.02)	$95,545	-0.04
LEC	-81,558	-0.50	7,502	0.05	$(177,216)	$172,848	($4,368)	($0.03)	$83,600	-0.05
LFC	-67,603	-0.42	7,507	0.05	$(151,067)	$172,983	$21,916	$0.14	$83,600	0.26
LFD	-65,948	-0.41	7,506	0.05	$(146,216)	$172,946	$26,731	$0.16	$95,545	0.28
SXX Average	-13,549	-0.85	2,250	0.14	$(29,622)	$51,702	$22,079	$1.39	$21,396	1.03
MXX Average	-39,992	-0.67	8,534	0.14	$(88,472)	$194,846	$106,374	$1.79	$69,949	1.52
LXX Average	-76,057	-0.47	7,503	0.05	$(166,447)	$172,880	$6,434	$0.04	$88,378	0.07
XAX Average	-49,260	-0.77	6,094	0.11	$(106,731)	$139,768	$33,037	$0.86	$60,813	0.54
XEX Average	-48,137	-0.76	6,094	0.11	$(104,454)	$139,751	$35,297	$0.89	$57,021	0.62
XFX Average	-34,670	-0.51	6,099	0.11	$(78,159)	$139,880	$61,720	$1.37	$60,446	1.02
ALL Average	-43,199	-0.67	6,096	0.11	$(94,847)	$139,809	$44,962	$1.07	$59,908	0.75

Figure 35: Heat recovery results for CTZ15 – Palm Springs

The proposed code requirement consists of mandatory heat recovery from refrigeration system(s) for space heating.

There are a multitude of combinations between refrigeration systems types, HVAC system types and configurations, store sizes and new construction project types. To allow sufficient flexibility that heat recovery can be accomplished as a mandatory measure, the code will only require a minimum 25% of the design refrigeration heat of rejection to be utilized for space heating. Since refrigerant leakage and cost is also an important concern (the sole reason for a dramatic reduction in the use of heat recovery over the two decades), a restriction on refrigerant charge is also included, specifically limiting the refrigerant charge increase to no greater than 20% or 0.5 lbs per 1,000 BTU/Hr of heating capacity, whichever is less. The cost assumptions for this measure allowed for construction methods (e.g. indirect water loop) that would readily meet the charge limitation.

Based on the analysis results, it is also recommended that climate zone 15 be excluded from this requirement.

4.8.2 Refrigerant charge analysis

The proposed reach-code requirement for this measure is at least 25% of the design refrigeration heat of rejection utilized for space heating, while increasing the refrigerant charge by no greater than 20% or 0.5 lbs per 1,000 BTU/Hr of heating capacity, whichever is less. Assuming the worst case impact on R-404A/R-507 refrigerant charge, Figure 36 below summarizes the net impact on GHG emissions. Figure 37 summarizes the net impacts of this measure on lifetime costs, including the savings associated with avoided GHG emissions. As shown, when accounting for worst case impacts on a system's refrigerant charge, this measure has inconsistent overall benefits to the environment in terms of GHG emissions. In some climate zones—i.e., CTZ01, CTZ03, and CTZ05—where natural gas savings are greatest, the overall impact on GHG emissions is more favorable. Even so, as shown in Figure 37, net cost savings over the equipment lifetime are still projected to result from this measure, except in Palm Springs (CTZ15), where the climate is the warmest.

	Annual Refrigerant Savings Range				**Annual Energy Savings**	**Net Savings Range**	
	Pounds		**$MTCO_2eq$**		**$MTCO_2eq$**	**$MTCO_2eq$**	
	High	**Low**	**High**	**Low**		**High**	**Low**
SXX Average	-18	-30	-33	-53	35	2	-18
MXX Average	-92	-151	-164	-269	131	-34	-139
LXX Average	-111	-182	-201	-329	154	-47	-176
XAX Average	-76	-124	-137	-222	97	-39	-125
XEX Average	-126	-209	-225	-376	104	-121	-271
XFX Average	-46	-74	-82	-133	117	35	-17
All Average							
Arcata	-74	-121	-133	-217	219	87	2
Oakland	-74	-121	-133	-217	153	20	-65
Santa Maria	-74	-121	-133	-217	161	28	-56
San Diego-Lindbergh	-74	-121	-133	-217	80	-52	-137
Fullerton	-74	-121	-133	-217	72	-60	-145
Riverside	-74	-121	-133	-217	71	-61	-146
Sacramento	-74	-121	-133	-217	109	-24	-109
Fresno	-74	-121	-133	-217	89	-44	-129
Palmdale	-74	-121	-133	-217	95	-37	-122
Palm Springs	-74	-121	-133	-217	16	-117	-202

Maximum Net Savings	307	276

Minimum Net Savings	-334	-562

Figure 36: State-wide carbon savings results for heat recovery measure

	Measure Cost ($)	Refrigerant Cost Savings Range ($)		TDV Energy Cost Savings ($)	Carbon Cost Savings Range ($)		Net Savings Range ($)	
		High	Low		High	Low	High	Low
SXX Average	$21,396	-$2,414	-$3,956	$126,510	$1,233	-$9,435	$103,934	$91,722
MXX Average	$69,949	-$12,144	-$19,905	$478,112	-$17,192	-$70,876	$378,828	$317,383
LXX Average	$88,378	-$14,315	-$23,465	$540,915	-$24,105	-$89,836	$414,117	$339,236
XAX Average	$60,813	-$9,922	-$16,124	$336,229	-$20,096	-$63,813	$245,397	$195,479
XEX Average	$57,021	-$16,357	-$27,262	$371,734	-$61,883	-$138,755	$236,473	$148,697
XFX Average	$60,446	-$5,959	-$9,683	$432,518	$17,653	-$8,599	$383,766	$353,790
All Average								
Arcata	$59,908	-$9,624	-$15,775	$771,752	$44,374	$1,013	$746,594	$697,082
Oakland	$59,908	-$9,624	-$15,775	$545,607	$10,245	-$33,117	$486,320	$436,807
Santa Maria	$59,908	-$9,624	-$15,775	$568,282	$14,468	-$28,893	$513,219	$463,706
San Diego-Lindbergh	$59,908	-$9,624	-$15,775	$284,389	-$26,838	-$70,200	$188,019	$138,507
Fullerton	$59,908	-$9,624	-$15,775	$256,694	-$30,944	-$74,305	$156,219	$106,706
Riverside	$59,908	-$9,624	-$15,775	$257,436	-$31,391	-$74,753	$156,513	$107,001
Sacramento	$59,908	-$9,624	-$15,775	$399,091	-$12,284	-$55,646	$317,275	$267,762
Fresno	$59,908	-$9,624	-$15,775	$331,549	-$22,429	-$65,790	$239,589	$190,076
Palmdale	$59,908	-$9,624	-$15,775	$358,692	-$18,987	-$62,349	$270,173	$220,661
Palm Springs	$59,908	-$9,624	-$15,775	$44,962	-$59,755	-$103,117	-$84,324	-$133,837

Maximum Net Savings	$1,371,700	$1,353,58
Minimum Net Savings	-$283,217	-$416,07

Figure 37: State-wide total savings results (including carbon) for heat recovery measure

4.9 CO_2 Secondary (indirect) or Cascade Cooling

Reduction of HFC refrigerant charge, leakage rates, and the attendant high direct greenhouse gas emissions are very important topics to the supermarket industry as well as a primary objective in California, resulting from legislation that directs the California Air Resources Board to take "early action" to reduce hydrofluorocarbon (HFC) emissions. A clear and immediate option, although still somewhat nascent in the US compared with other countries, is the use of carbon dioxide (CO_2) as the cooling fluid in the display cases and walk-in evaporator coils. In this configuration, there is no HFC refrigerant in the store; HFCs are limited to the compressor package (essentially a CO_2 chiller) and the

condenser. Systems may or may not use CO_2 compressors. A system that simply circulates phase-change CO_2 and uses HFC compressors for cooling is termed a secondary or indirect system. A system that uses CO_2 compressors for low temperature loads is termed a cascade system. Either system accomplishes similar results in terms of GHG reduction with generally similar efficiencies.

4.9.1 Savings Analysis

The large and small supermarket prototypes were utilized to evaluate the cost-effectiveness of this measure.

The energy impact from using CO_2 as the cooling fluid in both pump-recirculated indirect and cascade condensing configurations was determined to be negligible (See Appendix H for energy analysis results). When savings associated with reduced R-404A/R-507 refrigerant leakage are accounted for, significant environmental benefits are observed in secondary (indirect) cooling systems. Figure 38 summarizes the reduction of refrigerant in terms of both pounds of refrigerant as well as equivalent metric tons of CO_2 emissions. Figure 39 summarizes the net impact on lifetime costs, including the monetized benefit of avoided GHG emissions. Note that refrigerant charge and leak rate reductions are assumed to be independent of the design climate zone.

	Annual Refrigerant Savings Range (pounds)		**Annual Refrigerant Savings Range ($MTCO_2eq$)**	
	Lower	**Upper**	**Lower**	**Upper**
Small Supermarket	99	152	176	270
Large Supermarket	498	763	886	1,357
Average	299	457	531	813

Figure 38: Carbon savings results for indirect cooling measure

	Incremental Cost ($)	**Refrigerant Cost Savings Range**		**Carbon Cost Savings Range**		**Total Savings**		**Benefit/Cost Ratio Range**	
		Low	**High**	**Low**	**High**	**Low**	**High**	**Low**	**High**
Small Supermarket	$50,000	$13,044	$19,986	$90,224	$138,238	$103,268	$158,223	2.07	3.16
Large Supermarket	$120,000	$65,557	$100,357	$453,448	$694,158	$519,004	$794,515	4.33	6.62

Figure 39: Savings results (including carbon) for indirect cooling measure

This measure results in significant GHG emissions savings for both prototypes, and economic analysis shows that this measure is cost-effective.

The proposed Reach code requirement consists of using CO_2 for cooling of display cases and walk-ins. Secondary (indirect) cooling and/or cascade cooling would meet this requirement. Single phase glycol would not meet the requirement, based on the much larger increase in energy usage, as shown in Appendix A.

4.10 Walk-in Variable Speed Fan Control

The feasibility and cost-effectiveness of variable-speed control of evaporator fans in walk-in was evaluated. The measure analysis assumes modulation of the speed of all walk-in air unit fans in unison (at the same speed) as the primary means of space temperature control.

For the Base Case, no fan speed control is assumed; walk-in air unit fans are assumed to run at full-speed at all hours. To simulate variable-speed fan control, a part-load performance curve representing an approximate "third-power" relationship between % fan speed and % fan power was utilized.

The minimum fan speed was assumed to be 70%, and to account for realistic variations in control response and setpoints than are not readily captured in an hourly simulation, the fans were scheduled to run at 90% speed for four full, non-consecutive hours per day, regardless of the actual cooling demand. In normal operation the fan speed would be a function of cooling demand only; it would not be expected to or required to have these mandatory minimum speeds. However, in order to account for the many different walk-in/coil configurations and periodic variations in stocking levels (i.e. occasional severe overstocking) mentioned by shareholders, a minimum duty cycle at full speed is anticipated to provide greater air circulation, if necessary.

4.10.1 Analysis results by climate zone

The walk-in variable speed fan control measure was evaluated for all system types and in all climate zones. Figure 40 below summarizes the simulation results for the walk-in variable speed control measure:

	Energy Savings (kWh)	Energy Savings/ SF (kWh)	TDV Cost Savings ($)	TDV Cost Savings /SF ($)	Measure Cost ($)	Benefit/ Cost Ratio
SXX Average	3,971	0.25	$9,499	$0.60	$5,377	1.77
MXX Average	26,677	0.45	$63,330	$1.06	$15,529	4.08
LXX Average	143,019	0.88	$343,523	$2.12	$23,667	14.51
XAX Average	57,077	0.52	$137,278	$1.24	$14,858	9.24
XEX Average	56,224	0.51	$134,362	$1.22	$14,858	9.04
XFX Average	59,533	0.54	$142,502	$1.30	$14,858	9.59

All Average						
Arcata	56,615	0.52	$134,578	$1.229	$14,858	9.06
Oakland	57,182	0.52	$136,760	$1.245	$14,858	9.20
Santa Maria	57,072	0.52	$136,590	$1.245	$14,858	9.19
San Diego-Lindbergh	58,138	0.53	$140,719	$1.283	$14,858	9.47
Fullerton	58,095	0.53	$138,707	$1.260	$14,858	9.34
Riverside	58,172	0.53	$139,038	$1.262	$14,858	9.36
Sacramento	57,886	0.53	$139,601	$1.266	$14,858	9.40

Fresno	58,275	0.53	$140,384	$1.271	$14,858	9.45
Palmdale	57,930	0.53	$138,453	$1.253	$14,858	9.32
Palm Springs	59,525	0.54	$143,012	$1.292	$14,858	9.63

Maximum	153,159	0.94	$369,171	$2.277	$23,667	15.60
Minimum	3,763	0.24	$8,917	$0.563	$5,377	1.66

Figure 40: State-wide savings results for walk-in variable-speed fan control measure

The analysis shows that walk-in variable speed control is cost-effective for all system configurations and in all climate zones.

The proposed code requirement consists of mandatory control of fan-powered direct-expansion (DX) evaporators or secondary cooling coils in walk-in freezers and coolers, utilizing variable speed fan control as the primary means of space temperature control.

Control integration requirements

- For DX evaporators, speed control must be the primary means of temperature control, before other temperature control means, including cycling of liquid line solenoids, throttling of suction regulators (electronic or manual) or floating suction pressure on the associated suction group, if the walk-in is used for floating suction pressure control. Fan speed must reduce to minimum speed before other means of temperature control are applied.
- For secondary cooling coils (e.g. glycol or CO_2) speed control must be the primary means of temperature control before other flow controls are applied.

4.10.2 Industry concerns regarding sufficient airflow and product quality

Numerous concerns were raised by stakeholders. The two primary concersns are 1) the concern for air circulation since boxes have varied configurations and can be overstocked periodically, to the point that air doesn't circulate properly *even at full speed operation* and 2) the lack of industry experience with this measure which limits the ability to comment one way or the other. .

Improved air circulation

Two options have been discussed in stakeholder meetings to address the need for improved air circulation at certain times. One method would force full speed operation on a duty-cycle basis, such as 25% of every hour, regardless of temperature. Another method would allow forced full speed run time for a longer period, such as 8 hours to address a heavy product stock level, where the airflow may be blocked such that full speed would not be achieved simply based on space temperature.

Lack of industry experience

Additional discussion and stakeholder input is needed to fully develop this proposed code language.While there are very few examples of speed controlled evaporator fans in supermarkets, there are many examples in other industrial and commercial applications, and vendors of evaporators for supermarkets have been very active and innovative in recent months. One coil manufacturer currently has the motor technology to accept a fan speed control signal, while another can implement the motor technology at a cost premium. One air unit manufacturer has stated that they do not have fan motors that are variable-speed capable, and they are not currently pursuing the technology. One

controls manufacturer stated that air unit variable speed can be implemented today, but it is considered a special request. Were demand for the technology to increase, the logic algorithm could be integrated into the manufacturer's standard offering which would eliminate the "special request" cost premium.

The CASE team has received strong industry concern about this requirement. The measure has very attractive economics for owners, but because of these concerns, which will initially require special attention and engineering, we recommend this measure not be considered for this round of the standards update. We will continue to dialogue with industry to determine a long term solution to improve energy efficiency while maintaining product quality.

5. Recommended Code Language

Section 5 presents the proposed code language additions to Title 24, Section 127 for Supermarket Refrigeration, and Supermarket Refrigeration Acceptance Testing to Non-residential Appendix NA-127, plus amendments to Section 101-Definitions, and Title 24 Part 11- California Green Building Standards Code.

New proposed language is underlined.

5.1 Title 24 Draft Code Language

SECTION 101 – DEFINITIONS

BUBBLE POINT is the refrigerant liquid saturation temperature at a specified pressure.

COOLER is space greater than or equal to 28°F but less than 55°F.

DEW POINT is the refrigerant vapor saturation temperature at a specified pressure.

SATURATED CONDENSING TEMPERATURE (CONDENSING TEMPERATURE) is the saturation temperature corresponding to the refrigerant pressure at the condenser entrance for single component and azeotropic refrigerants. For zeotropic refrigerants, the arithmetic average of the Dew Point and Bubble Point temperatures corresponding to the refrigerant pressure at the condenser entrance.

CONDENSER SPECIFIC EFFICIENCY is the Total Heat of Rejection (THR) capacity divided by the fan input electric power at 100% fan speed (including spray pump electric input power for evaporative condensers).

FREEZER is space designed to maintain less than 28°F and space designed for convertible between cooler and freezer operation.

MICRO-CHANNEL CONDENSER is an air-cooled condenser for refrigeration systems which utilizes multiple small parallel gas flow passages in a flat configuration with unitized fin surface between the gas passages, rather than round tubes arranged at a right angle to separate plate fins.

TOTAL HEAT OF REJECTION (THR) is the heat absorbed at the evaporator plus the heat picked up in the suction line plus the heat added to the refrigerant in the compressor.

SECTION 127 – MANDATORY REQUIREMENTS FOR SUPERMARKET REFRIGERATION

Retail food stores with 8,000 square feet or more of conditioned area or more, and that utilize either refrigerated display cases, or walk-in coolers or freezers connected to remote compressor units or condensing units, shall meet the requirements of this section.

(a) **Condensers**. Fan-powered condensers shall conform to the following requirements.

1. All condenser fans for air-cooled condensers, evaporative-cooled condensers, air- or water-cooled fluid coolers or cooling towers shall be continuously variable speed, with the speed of all fans serving a common condenser high side controlled in unison.

2. The refrigeration system condenser controls for systems with air-cooled condensers shall use

variable-setpoint control logic to reset the condensing temperature setpoint in response to ambient drybulb temperature.

3. The refrigeration system condenser controls for systems with evaporative-cooled condensers shall use variable-setpoint control logic to reset the condensing temperature setpoint in response to ambient wetbulb temperature.

EXCEPTION to Section 127 (a) 2 and 3: Condensing temperature control strategies approved by the Executive Director that have been demonstrated to provide equal energy savings

4. The minimum condensing temperature setpoint shall be less than or equal to 70°F.

5. Fan-powered condensers shall meet the specific efficiency requirements listed in Table 127-A:

TABLE 127-A - FAN-POWERED CONDENSERS –SPECIFIC EFFICIENCY REQUIREMENTS

Condenser Type	**Minimum Specific Efficiency [a]**	**Rating Condition**
Evaporative-Cooled	160 (Btu/h)/W	100°F Saturated Condensing Temperature (SCT), 70°F Entering Wetbulb Temperature
Air-Cooled	65 (Btu/h)/W	105°F Saturated Condensing Temperature (SCT), 95°F Entering Drybulb Temperature
[a] Condenser specific efficiency is the Total Heat of Rejection (THR) capacity divided by the fan input electric power at 100% fan speed (plus spray pump electric input power for evaporative condensers).		

EXCEPTION 1 to Section 127 (a) 5: Condensers with a THR capacity of less than 150 MBH at the specific efficiency rating condition.

EXCEPTION 2 to Section 127 (a) 5: Existing condensers that are reused for an expansion or remodel.

6. Air-cooled condensers shall have a fin density no greater than 10 fins per inch.

EXCEPTION to Section 127 (a) 6: Micro-channel condensers.

EXCEPTION to Section 127 (a) 6: Existing condensers that are reused for an expansion or remodel.

(b) Compressor Systems. Refrigeration compressor systems and condensing units shall conform to the following requirements.

1. Compressors and multiple-compressor suction groups shall include control systems that use floating suction pressure logic to reset the target saturated suction temperature based on the temperature requirements of the attached refrigeration display cases or walk-ins.

EXCEPTION 1 to Section 127 (b) 1: Single compressor systems that do not have variable capacity capability.

EXCEPTION 2 to Section 127 (b) 1: Suction groups that have a design saturated suction temperature of 30°F or higher, or suction groups that comprise the high stage of a two-stage or cascade system or that primarily serve chillers for secondary cooling fluids.

2. Liquid subcooling shall be provided for all low temperature parallel compressor systems with a design saturated suction temperature of -10°F or lower, with the subcooled liquid temperature maintained continuously at 50°F or less, using compressor economizer port(s) or a separate parallel medium or high temperature suction group operating at a saturated suction temperature of 18°F or higher.

EXCEPTION to Section 127 (b) 1: Single compressor systems.

EXCEPTION to Section 127 (b) 2: Low temperature cascade systems that condense into another refrigeration system rather than condensing to ambient temperature.

EXCEPTION 3 to Section 127 (b) 2: Existing compressors that are reused for an expansion or remodel,

(c) Display Cases.

1. Lighting in refrigeration display cases, and lights on glass doors installed on walk-in coolers and freezers shall be controlled by either A or B:

    a. Automatic time switch controls to turn off lights during non-business hours. Use of timed overrides to turn the lights for stocking shall not exceed one hour for any case line-up or walk-in and if manually imitated shall time-out automatically.

    b. Motion sensor controls on each case that reduce display case lighting power by at least 50% within 30 minutes after the area near the case is vacated.

EXCEPTION 1 to Section TBD (d) 1: Stores which are normally open for business 140 hours or more per week.

2. Upright low temperature display cases that are designed for a supply air temperature of 5°F or lower shall utilize reach-in glass doors.

(d) Refrigeration Heat Recovery

1. Refrigeration and HVAC systems shall utilize 25% or more of the design Heat of Rejection of all refrigeration systems for space heating.

2. The increase in HFC refrigerant charge for associated with refrigeration heat recovery shall be no greater than 20% of the total refrigerant charge without heat recovery, or 0.50 lbs per 1,000 BTU/Hr of heating capacity, whichever is less.

TITLE 24 PART 11 - CALIFORNIA GREEN BUILDING STANDARDS CODE REQUIREMENTS FOR SUPERMARKET REFRIGERATION

(a) CO_2 Indirect or Cascade Cooling Systems

Tentative pending additional stakeholder input and clarification on TDV values:

1. Cooling for all refrigerated display cases and walk-in coolers and freezers shall be provided using carbon dioxide (CO_2), connected to compressors as a direct expansion refrigerant, or as a phase-change indirect cooling fluid.

EXCEPTION 1 to Section TBD (b) 1: Stores with less than 20,000 square feet of sales area.

EXCEPTION 2 to Section TBD (b) 1: Existing compressor systems that are reused for an expansion or remodel,

6. Appendix A: Rejected Measures

This appendix summarizes the measures that were considered for inclusion in the 2013 standards, but were later dropped from consideration after initial research. These include:

- Evaporator Coil Specific Efficiency
- Display Case LED Lights
- Night Covers on Open Display Cases
- Prohibit Hot Gas Defrost
- Glycol Secondary Loop (Indirect) System Configuration

6.1 Evaporator Coil Specific Efficiency

Evaporator coil specific efficiency (Btu/hr/Watt at a standard condition) was considered for inclusion in the Title 24 standard. Research was to be conducted for as many as five or more families of evaporator coils, including consideration of coil sizes, refrigerant feed type (direct expansion vs. flooded/recirculated), considerations for long-throw and penthouse (ducted) configurations, freezer and cooler coils, fans required for air mixing (throw length), with potential to research other variants. Existing work has already been completed for smaller evaporators as part of the 2008 Title 20 appliance efficiency standards, where an initial study of a large portion of the available evaporator coils showed a very wide range in evaporator fan power per unit of capacity (specific efficiency).

Initial research into the feasibility of this measure revealed several challenges:

- Evaporator coils are not rated to any performance standard. Capacity is not published per AHRI standards. Power is often not published at all, and when available is almost always the nominal motor power, not the applied power. Furthermore, for smaller units, the nominal motor power is typically regarded as a generalization, with actual shaft power often differing from nominal power by as much as 100%. Until evaporators are rated and published according to a standard, the actual performance will remain largely unknown, and it is very likely that evaporators will increase in size if they are rated, tested and certified to a standard.
- Requiring ratings to AHRI conditions (and certified ratings) would very likely cause extensive changes to evaporator coil ratings since the catalog values now are “commercialized” by most accounts, at least on smaller models.

While mandating an efficiency requirement to prohibit the worst-performing models would yield significant savings, it is recommended that this measure be deferred until certification and testing is widely implemented for this equipment.

6.2 Display Case LED Lights

The feasibility and cost-effectiveness of implementing LED lights in reach-in glass door cases and open display cases was evaluated. The savings and cost-effectiveness of this measure were very attractive. However, several issues were discovered during preliminary analysis of this measure:

- For medium-temperature open display cases, stakeholders responded that extensive study was conducted to gauge the economics of LED lights, which revealed that products sold in less volume

under LED lighting than under conventional lighting. LED lights do not illuminate the product as effectively as conventional fluorescent lighting.

- For the low-temperature reach-in display cases with doors, door lighting requirements are pre-empted by federal display case standards.

6.3 Night Covers on Open Display Cases

The feasibility and cost-effectiveness of requiring night covers on all open display cases was evaluated. Air curtains were assumed to reduce infiltration into open upright medium-temperature display cases during non-business and non-stocking hours.

Analysis showed that the measure was not cost-effective, based on poor TDV economics, particularly when labor to put up and take down the night covers on a daily basis is considered.

6.4 Prohibit Gas Defrost

The analysis evaluated the cost-effectiveness of prohibiting hot gas defrost for walk-in evaporator coils and refrigerated display cases. Acceptable methods of defrost would be electric resistance, or off-cycle.

Although gas defrost uses less energy than electric defrost, gas defrost requires valving that increases head pressure and consequently requires a higher refrigerant charge. Therefore, by prohibiting gas defrost, this measure is assumed to reduce charge size by up to 10%. Gas defrost is also expected to increase the potential for leaks due to the need for additional piping and valves. Thus, prohibiting hot gas defrost is also assumed to reduce refrigerant leak rates by 5%.

Figure 41 summarizes the preliminary results from the direct and indirect emissions analysis of this measure based on only one climate zone (Sacramento [CTZ12]). Figure 42 summarizes the net impacts of this measure on lifetime costs, including the monetized benefit of avoided GHG emissions in the same climate zone. As shown, when GHG emission reductions associated with reduced R-404A/507 refrigerant leakage are accounted for, significant net GHG benefits can be realized. However, this measure is not cost-effective based on TDV energy costs, and the refrigerant and carbon cost savings associated with reduce refrigerant emissions are not sufficient to render the measure cost-effective. As a result, this measure was removed from consideration.

	Annual Refrigerant Savings Range (pounds)		**Annual Refrigerant Savings Range ($MTCO_2eq$)**		**Annual Energy Savings ($MTCO_2eq$)**	**Net Savings Range ($MTCO_2eq$)**	
	Low	**High**	**Low**	**High**		**Low**	**High**
SXX Average	10	17	18	30	-3	16	27
MXX Average	51	84	92	150	-15	77	136
LXX Average	62	102	112	184	-17	95	167
XAX Average	43	69	76	124	-11	65	113
XEX Average	70	117	126	209	-11	114	198
XFX Average	26	41	46	74	-11	34	63
All Average	**41**	**68**	**74**	**121**	-11	**63**	**110**

Figure 41: Sacramento carbon savings results for no hot gas defrost

	Measure Cost ($)	Refrigerant Cost Savings Range ($)		TDV Energy Cost Savings ($)	Carbon Cost Savings Range ($)		Net Savings Range ($)	
SXX Average	$0	$1,346	$2,206	-$18,138	$7,990	$13,940	-$8,801	-$1,991
MXX Average	$0	$6,772	$11,101	-$102,124	$39,413	$69,353	-$55,938	-$21,670
LXX Average	$0	$7,983	$13,086	-$116,046	$48,714	$85,372	-$59,349	-$17,589
XAX Average	$0	$5,534	$8,992	-$78,747	$33,229	$57,609	-$39,985	-$12,146
XEX Average	$0	$9,122	$15,204	-$78,979	$58,481	$101,352	-$11,376	$37,576
XFX Average	$0	$3,323	$5,400	-$78,687	$17,628	$32,269	-$57,735	-$41,018
All Average	$0	$5,367	$8,798	-$78,769	$32,039	$56,221	-$41,363	-$13,750

Figure 42: Sacramento total savings results (including carbon) for no hot gas defrost

6.5 Glycol Secondary Loop (Indirect) System Configuration

Glycol was evaluated as a secondary cooling fluid as part of the indirect system configuration measure. Figure 43 shows the economic analysis for the large supermarket prototype with recirculated glycol.

	Measure Cost ($)	Refrigerant Cost Savings Range ($)		TDV Cost Savings ($)	Carbon Cost Savings Range ($)		Net Savings Range ($)		Benefit/Cost Ratio Range	
Arcata	$150,000	$65,557	$100,357	($657,428)	$379,270	$619,980	($362,601)	($87,091)	(2.42)	(0.58)
Oakland	$150,000	$65,557	$100,357	($671,899)	$378,266	$618,977	($378,076)	($102,565)	(2.52)	(0.68)
Santa Maria	$150,000	$65,557	$100,357	($671,748)	$378,302	$619,013	($377,889)	($102,378)	(2.52)	(0.68)
San Diego	$150,000	$65,557	$100,357	($687,554)	$377,203	$617,913	($394,794)	($119,283)	(2.63)	(0.80)
Fullerton	$150,000	$65,557	$100,357	($592,745)	$389,633	$630,344	($287,555)	($12,044)	(1.92)	(0.08)
Riverside	$150,000	$65,557	$100,357	($621,580)	$387,953	$628,663	($318,071)	($42,560)	(2.12)	(0.28)
Sacramento	$150,000	$65,557	$100,357	($614,995)	$389,365	$630,075	($310,073)	($34,562)	(2.07)	(0.23)
Fresno	$150,000	$65,557	$100,357	($638,570)	$386,774	$627,485	($336,239)	($60,728)	(2.24)	(0.40)
Palmdale	$150,000	$65,557	$100,357	($631,503)	$387,006	$627,717	($328,940)	($53,430)	(2.19)	(0.36)
Palm Springs	$150,000	$65,557	$100,357	($709,073)	$378,571	$619,281	($414,945)	($139,435)	(2.77)	(0.93)

Figure 43: Economics analysis for glycol secondary system on large supermarket

Based on this analysis, using glycol as an indirect heat transfer fluid for medium temperature systems (in lieu of CO_2) is not cost effective.

7. Appendix B: System Schematics

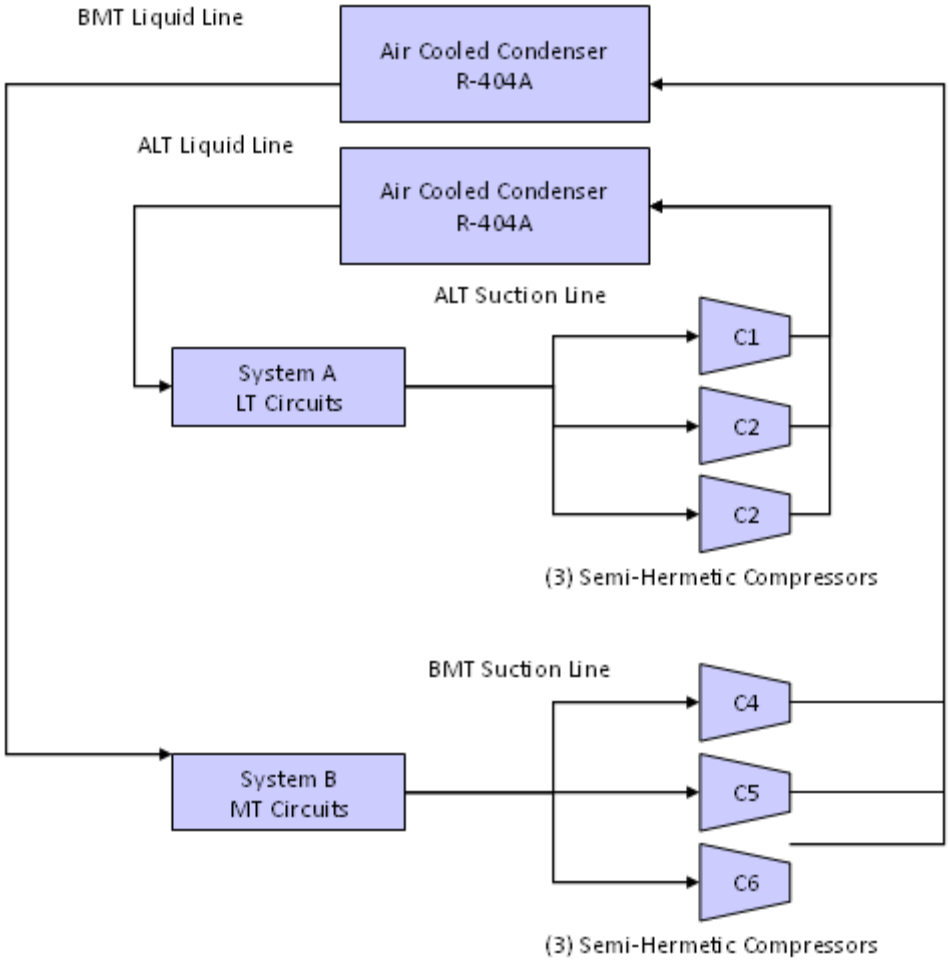

Figure 44: Small supermarket with central parallel rack compressor system and air-cooled condensers (SAC)

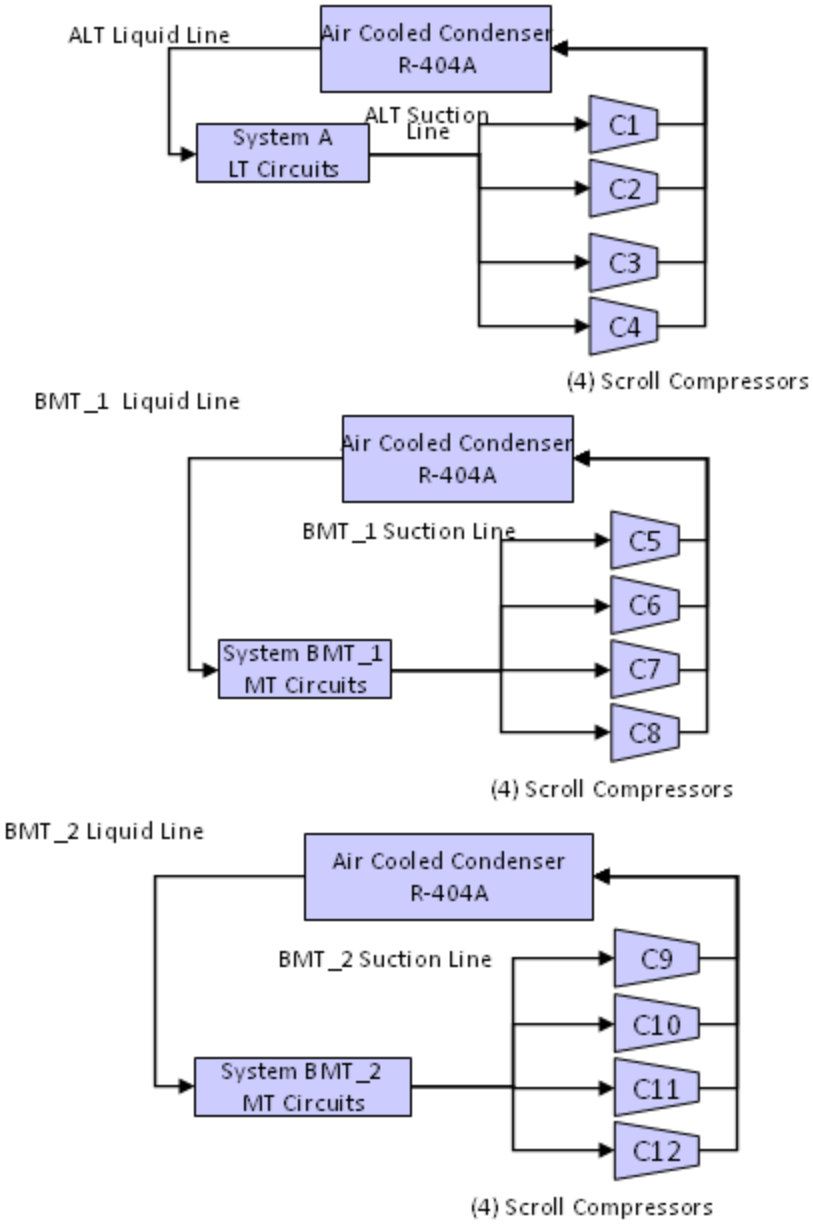

Figure 45: Small supermarket with distributed compressor systems and air-cooled condensers (SAD)

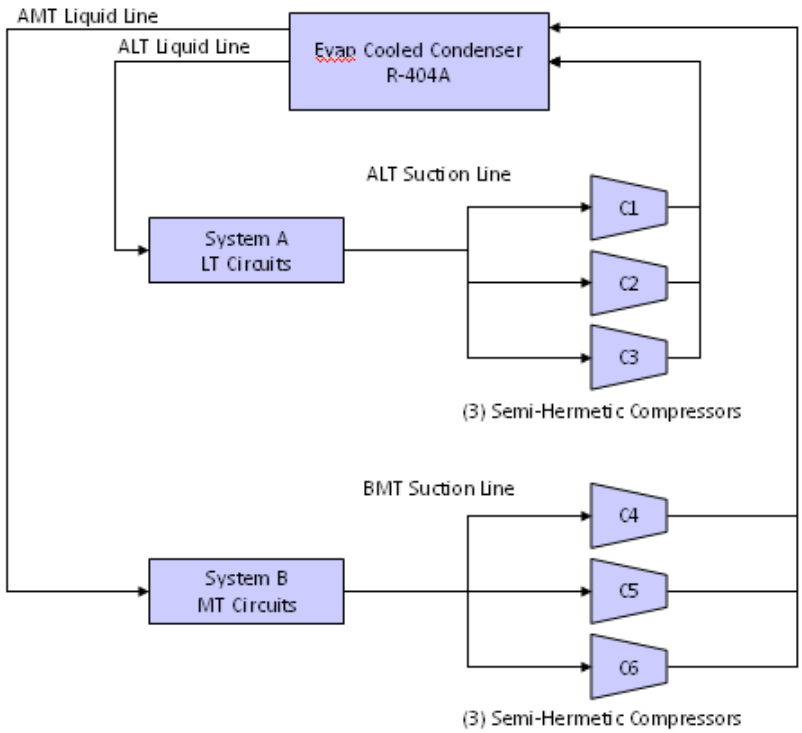

Figure 46: Small supermarket with central parallel rack compressor system and evaporative-cooled condensers (SEC)

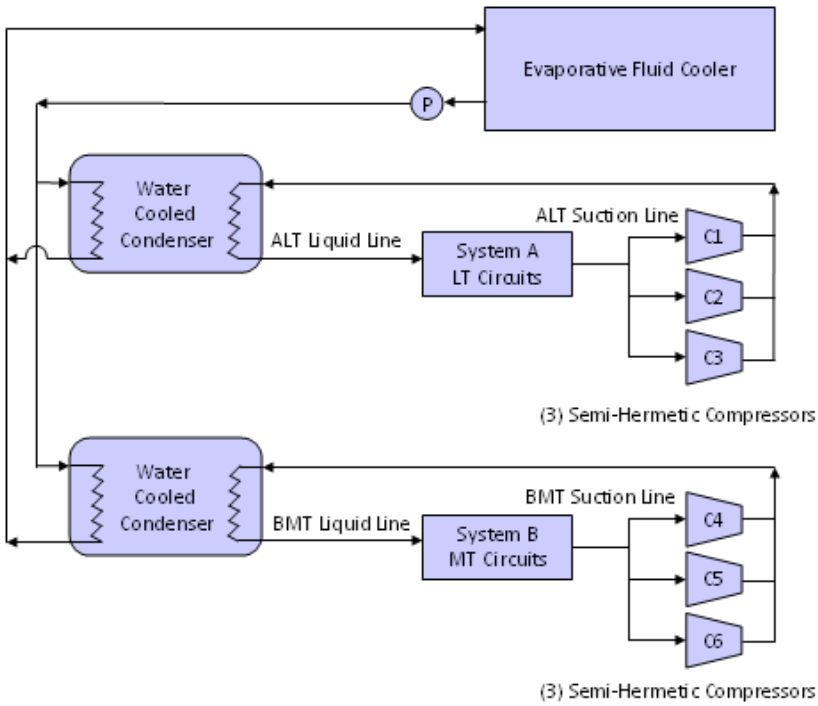

Figure 47: Small supermarket with central parallel rack compressor system and water-cooled condensers served by a central evaporative-cooled fluid cooler (SFC)

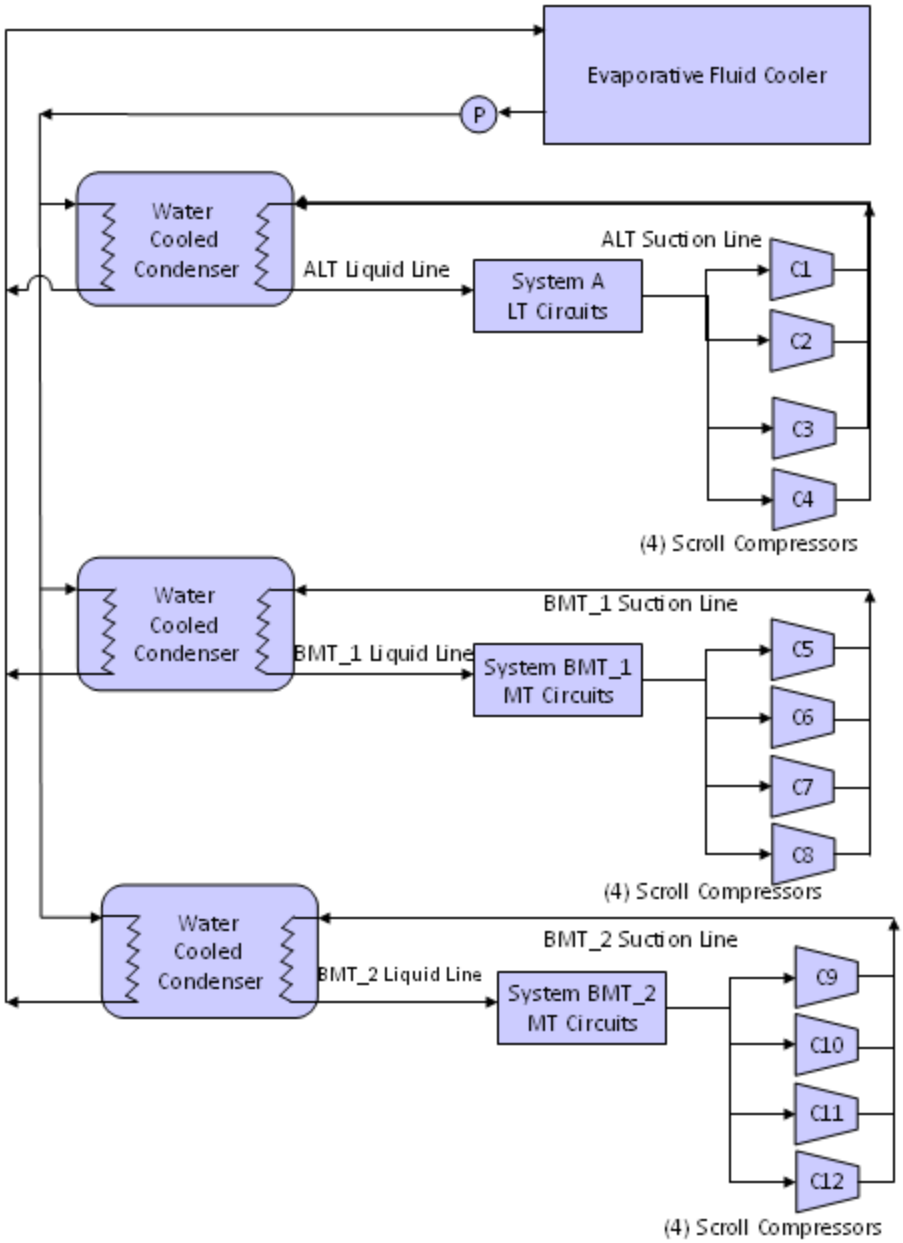

Figure 48: Small supermarket with distributed compressor systems and water-cooled condensers served by a central evaporative-cooled fluid cooler (SFD)

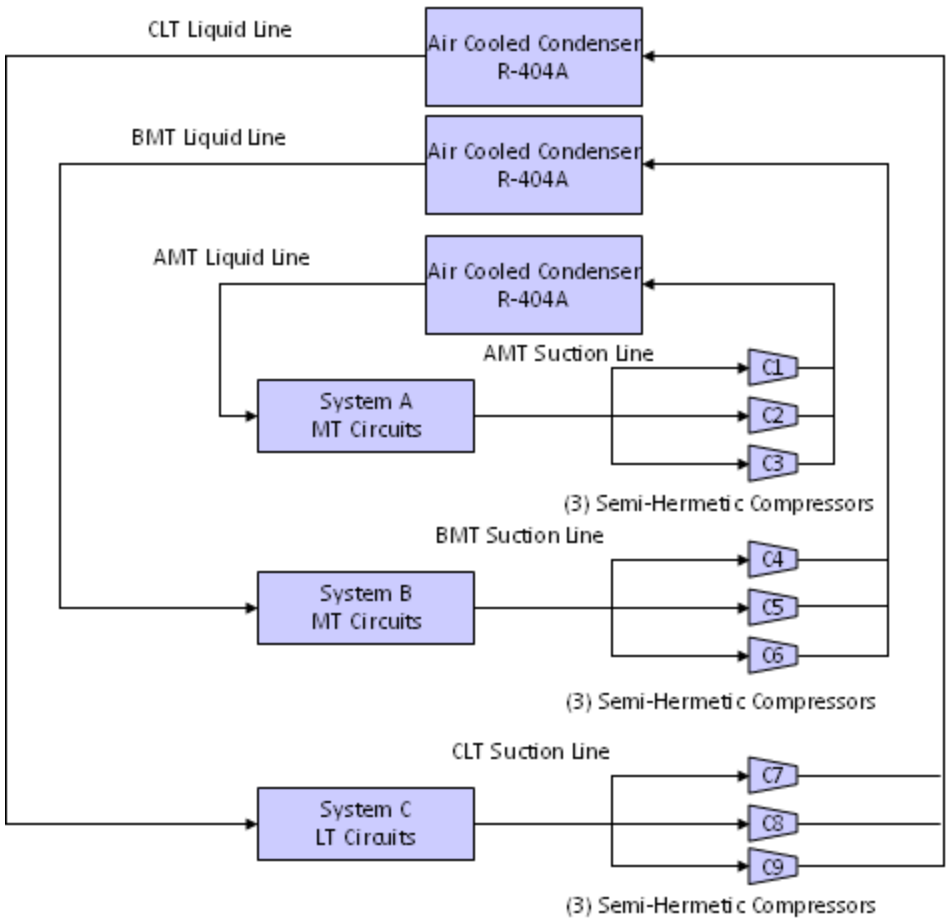

Figure 49: Large supermarket with central parallel rack compressor configuration and air-cooled condensers (MAC)

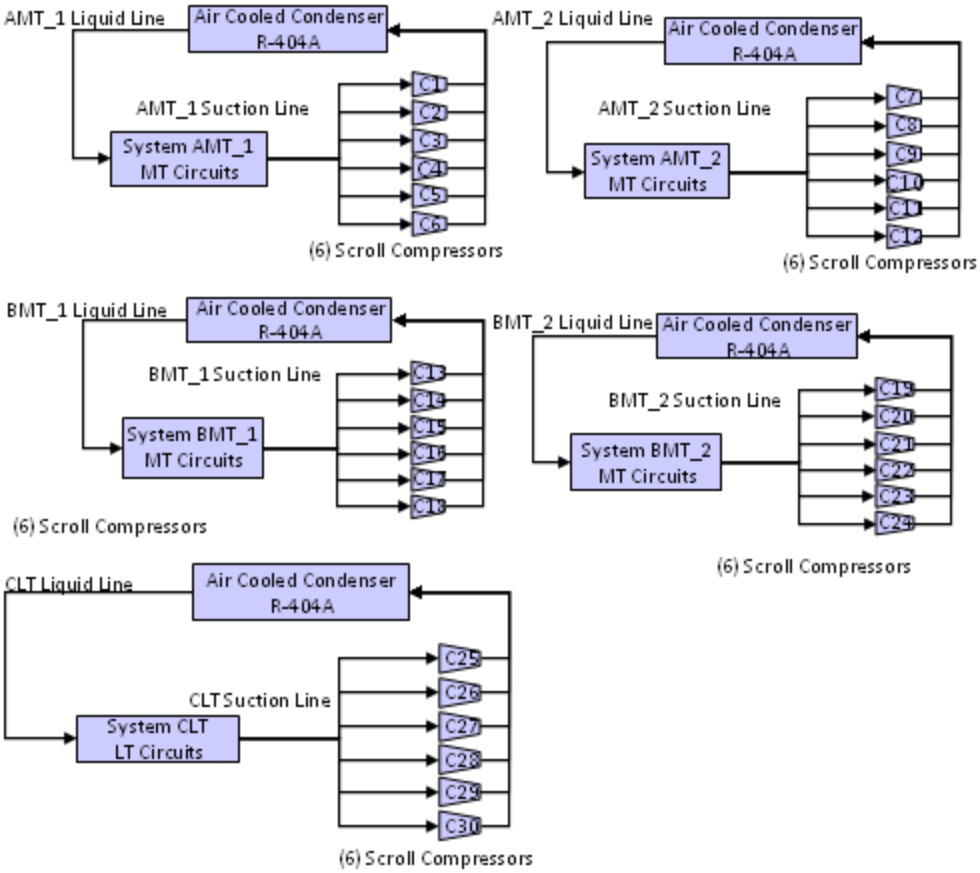

Figure 50: Large supermarket with distributed compressor systems and air-cooled condensers (MAD)

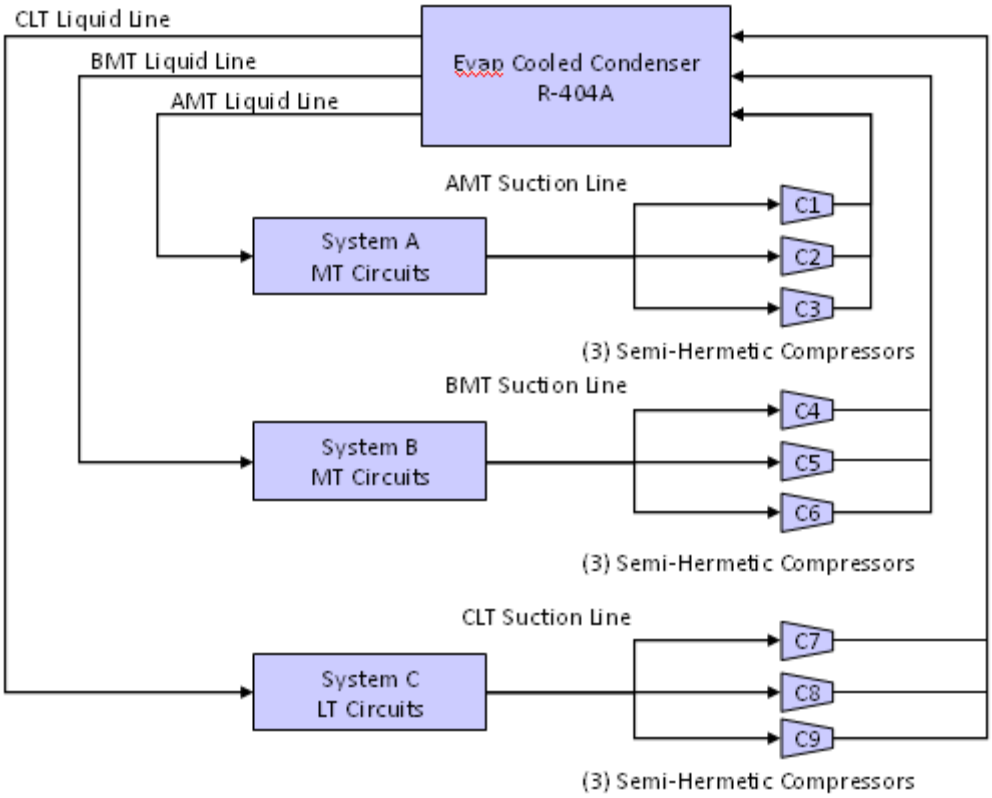

Figure 51: Large supermarket with central parallel rack compressor system and evaporative-cooled condensers (MEC)

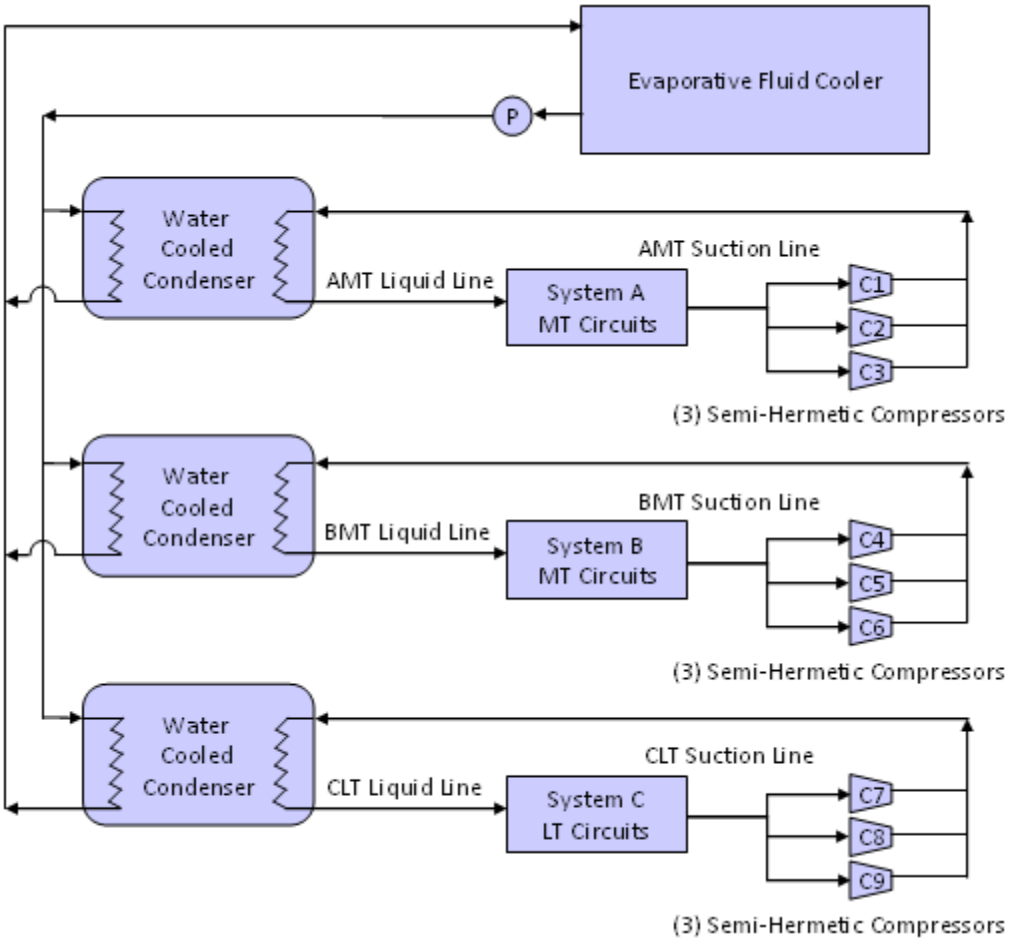

Figure 52: Large supermarket with central parallel rack compressor system and water-cooled condensers served by a central evaporative-cooled fluid cooler (MFC)

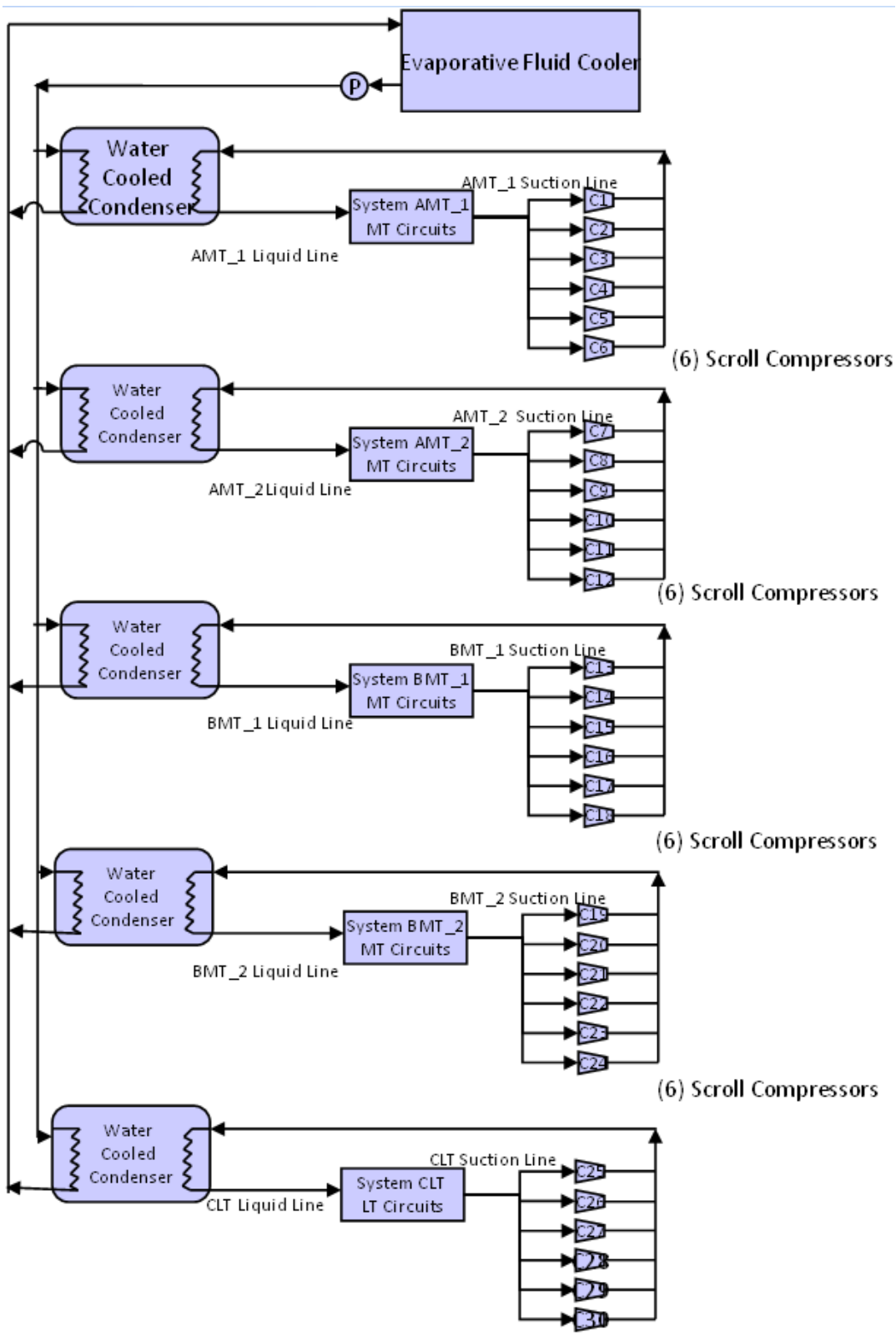

Figure 53: Large supermarket with distributed compressor systems and water-cooled condensers served by a central evaporative-cooled fluid cooler (MFD)

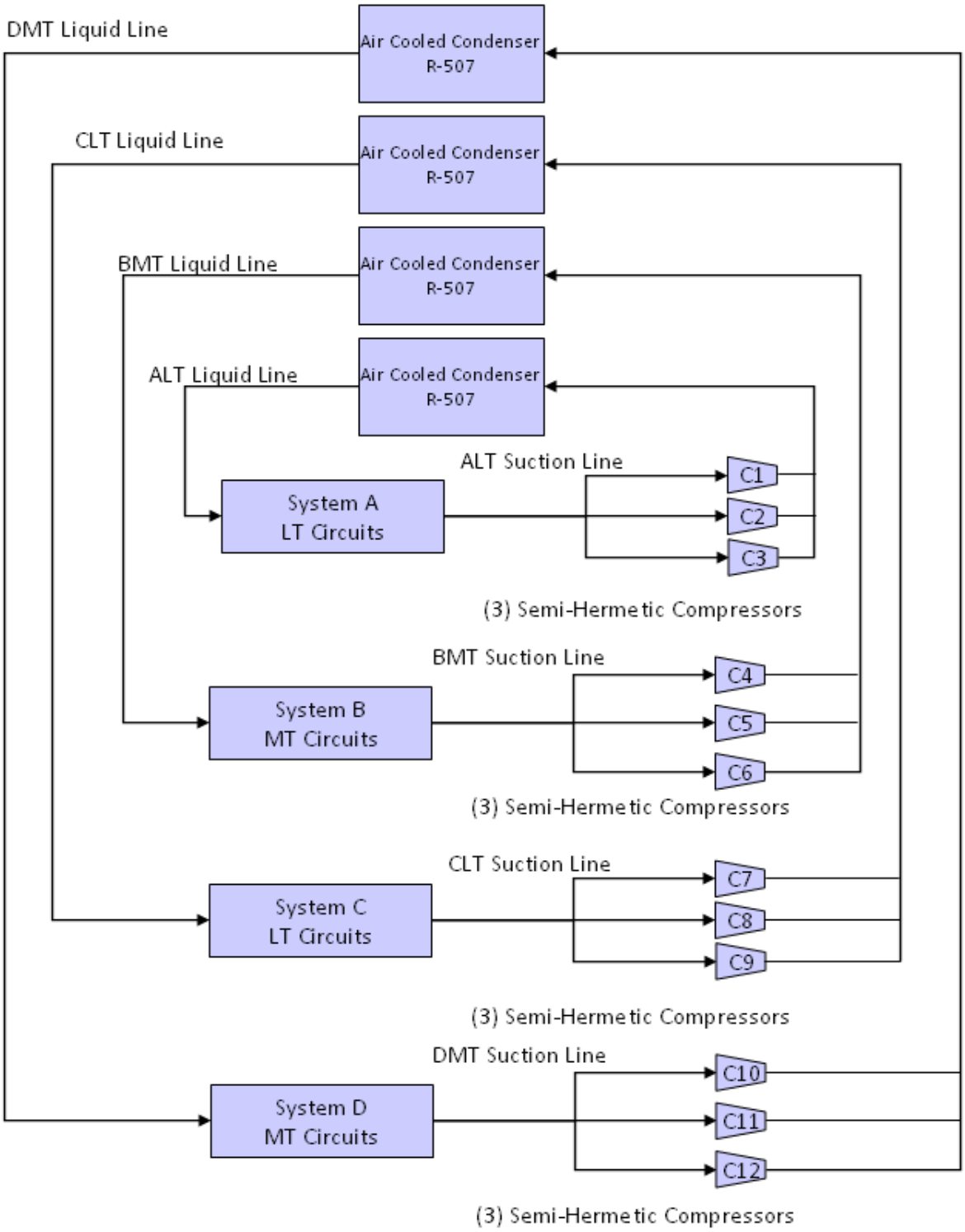

Figure 54: Big-box store with central parallel rack compressor system and air-cooled condensers (LAC)

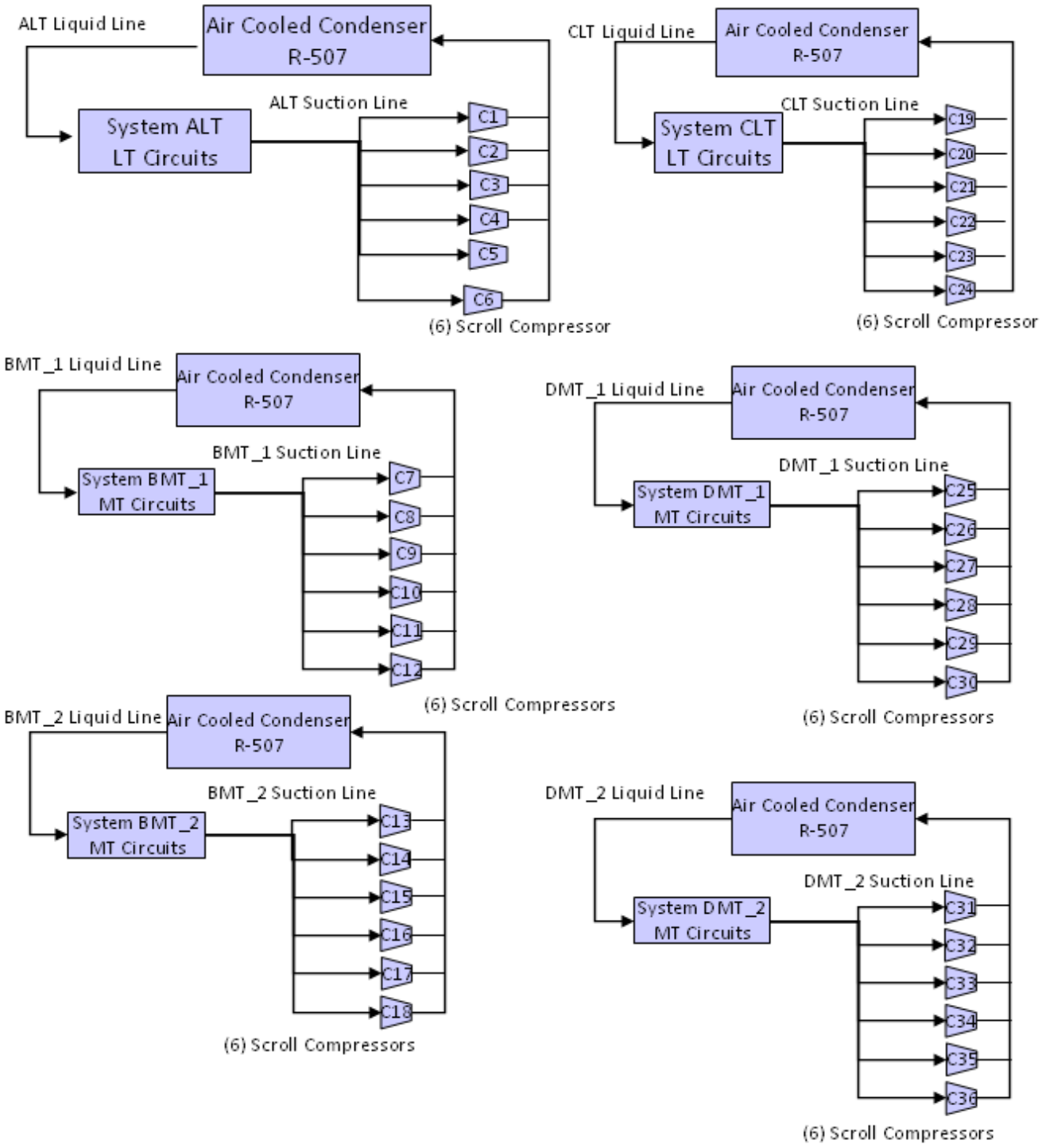

Figure 55: Big-box food store with distributed compressor systems and air-cooled condensers (LAD)

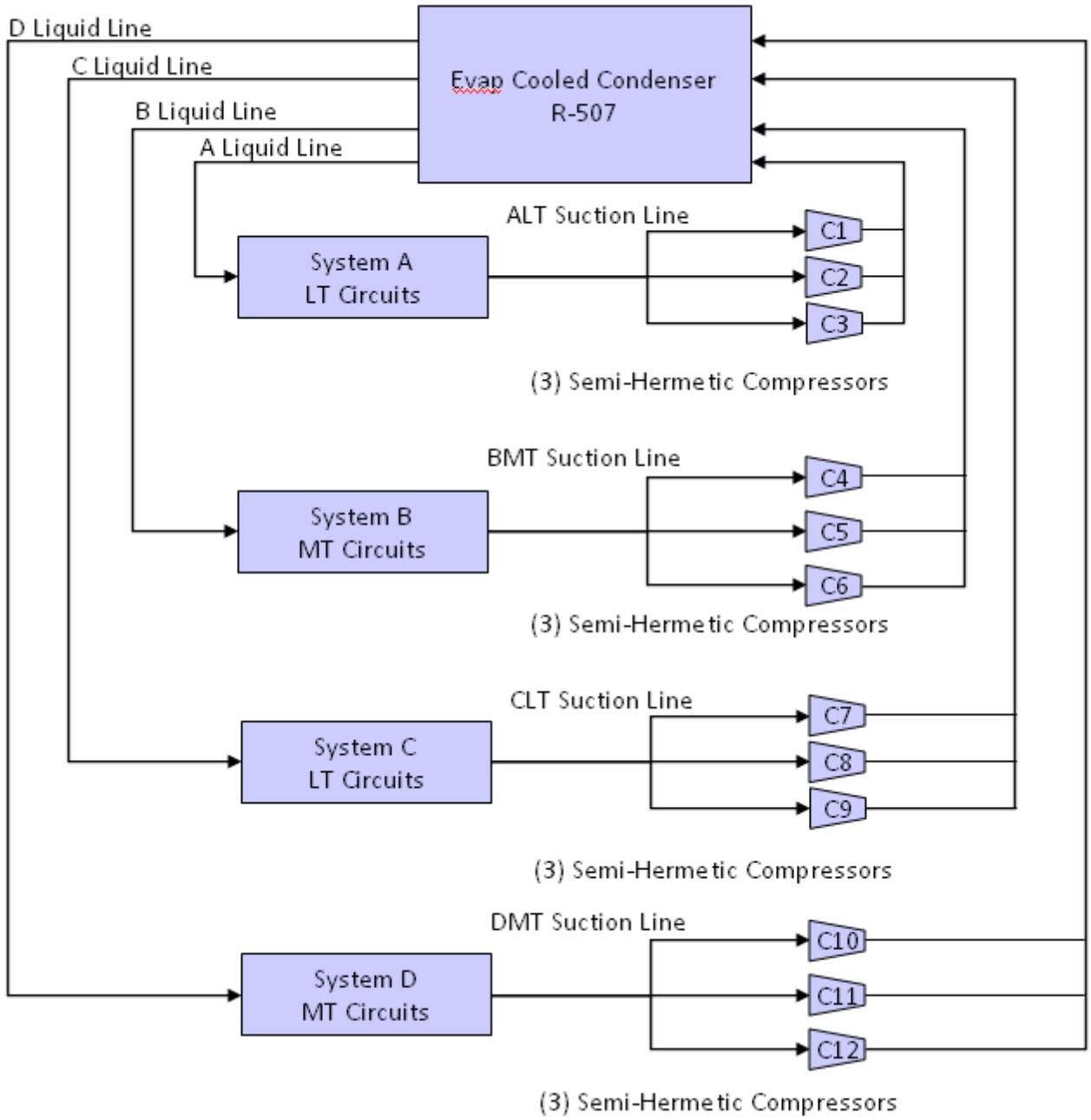

Figure 56: Big-box store with central parallel compressors and evaporative condenser (LEC)

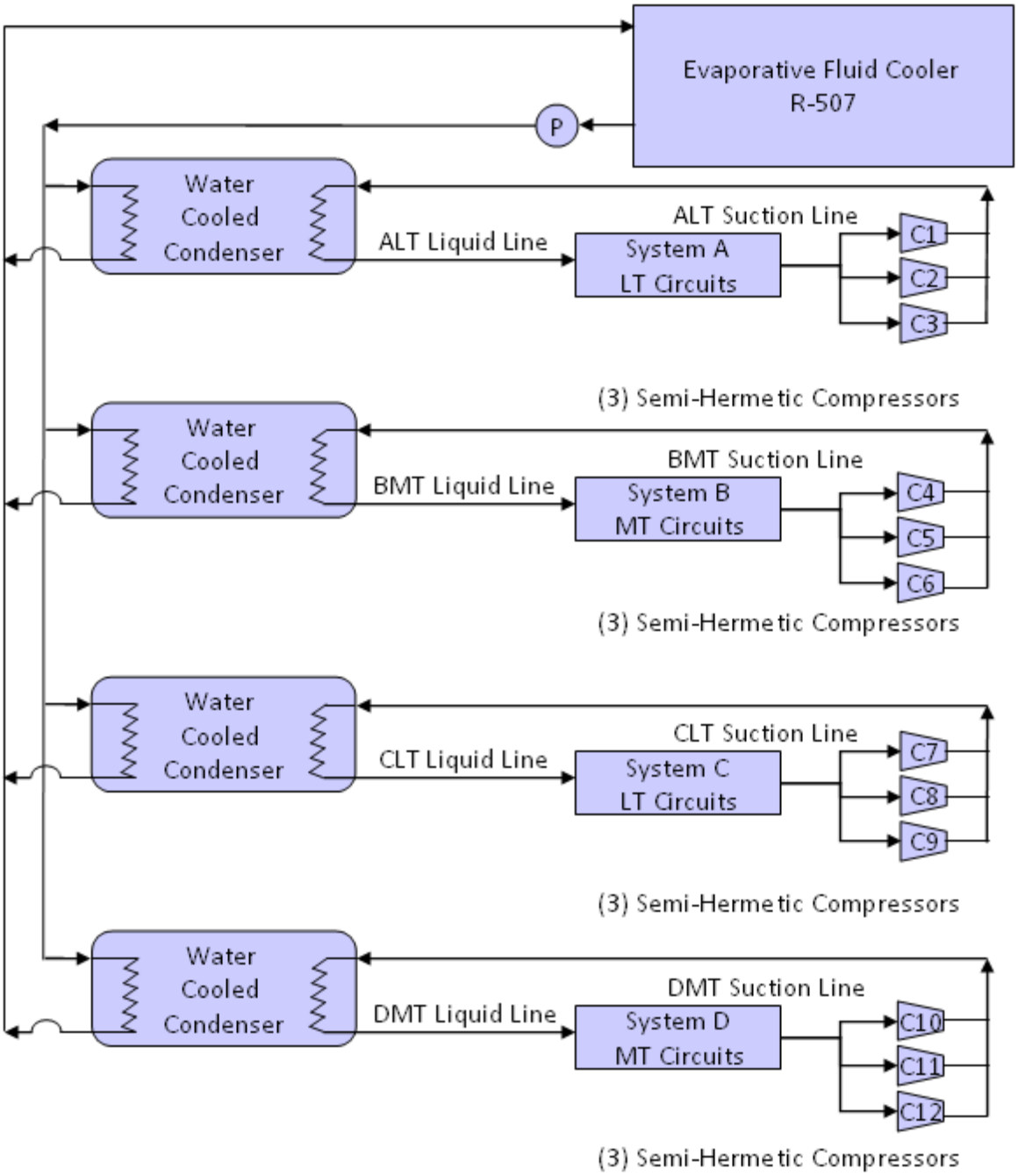

Figure 57: Big-box food store with central parallel rack compressor system and water-cooled condensers served by a central evaporative-cooled fluid cooler (LFC)

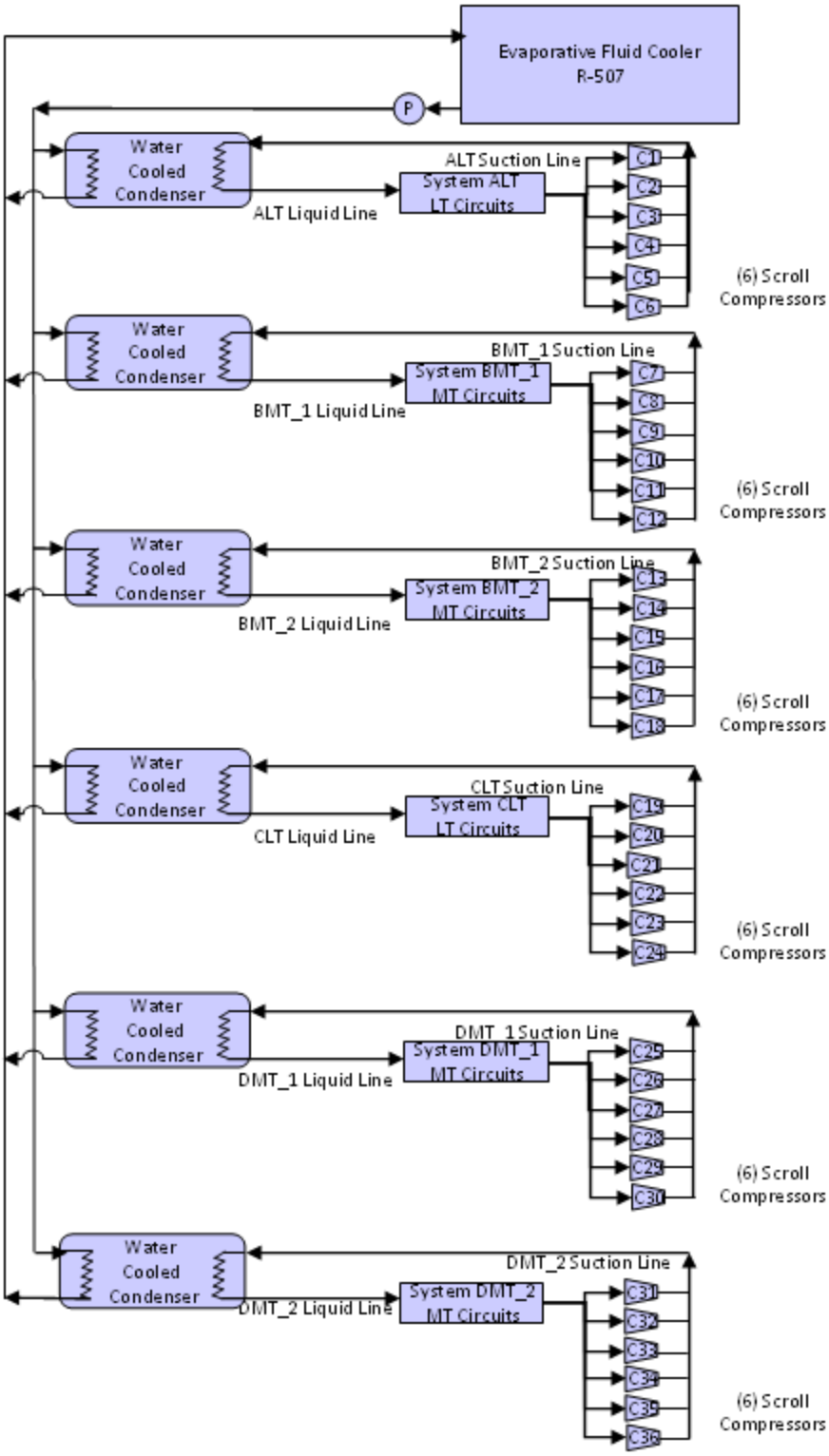

Figure 58: Large supermarket with distributed compressor systems and water-cooled condensers served by a central evaporative-cooled fluid cooler (MFD)

8. Appendix C: Base Case Facility Descriptions

The Base Case design is the starting point from which energy efficient design alternatives were considered. Typically, the Base Case would be defined as the current code requirements. However, there are no existing Title 24 requirements for supermarket refrigeration systems. Consequently, the Base Case for this analysis is based primarily on current industry-standard practice. Industry-standard practice is typified by the Base Case used and perfected in the California Savings By Design (SBD) program, a 10 year old, statewide effort to encourage energy efficiency. The SBD Base Case characteristics are rooted in extensive consultant experience with historical and recent supermarket industry standard practice. In addition, Title 20 appliance standards and federal walk-in requirements also dictate certain Base Case parameters. The Base Case design is comprised of the following assumptions:

Item	Small Supermarket	Large Supermarket	Big Box Food Store
System Information			
Refrigerant	R-404A	R-404A	R-507
System Type	Central or Distributed	Central or Distributed	Central or Distributed
Indirect System	None	None	None
Compressor Information			
Compressor Type	Semi-hermetic reciprocating compressors or Scroll compressors	Semi-hermetic reciprocating compressors or Scroll compressors	Semi-hermetic reciprocating compressors or Scroll compressors
Compressor Selection for Simulation	LT Semi-hermetic: 06DR316 MT Semi-hermetic: 06DR725 LT Scroll: ZF18K4E MT Scroll: ZB45KCE	LT Semi-hermetic: 06DR316 MT Semi-hermetic: 06DR725 LT Scroll: ZF18K4E MT Scroll: ZB45KCE	LT Semi-hermetic: 06DR316 MT Semi-hermetic: 06DR725 LT Scroll: ZF18K4E MT Scroll: ZB45KCE
Number of Suction Groups	(2) Two SST Levels: (1) LT Suction Group (1) MT Suction Group No AC Rack	(3) Three SST Levels: (1) LT Suction Group (2) MT Suction Groups No AC Rack	(6) Six SST Levels: (4) LT Suction Groups (2) MT Suction Groups No AC Rack
Means of compressor control	Fixed setpoint electronic sequencing control with on/off cycling	Fixed setpoint electronic sequencing control with on/off cycling	Fixed setpoint electronic sequencing control with on/off cycling
Subcooling	None	None	None
Condenser Information			
Condenser Type	Air cooled, evaporative cooled or fluid cooler	Air cooled, evaporative cooled or fluid cooler	Air cooled, evaporative cooled or fluid cooler
Ambient Temperature	Title 24 Joint Appendix JA2 0.1% for design Wet Bulb Temperature 0.1% for design Dry Bulb Temperature	Title 24 Joint Appendix JA2 0.1% for design Wet Bulb Temperature 0.1% for design Dry Bulb Temperature	Title 24 Joint Appendix JA2 0.1% for design Wet Bulb Temperature 0.1% for design Dry Bulb Temperature
Condenser Selection TD (Air cooled condenser)	LT: 10°F TD MT: 15°F TD	LT: 10°F TD MT: 15°F TD	LT: 10°F TD MT: 15°F TD
Condenser Selection TD (Evaporative cooled condenser)	Between 20°F and 25°F TD, based on WBT:	Between 20°F and 25°F TD, based on WBT:	Between 20°F and 25°F TD, based on WBT:

DRAFT

	78°F WBT: 20°F TD 72°F WBT: 23°F TD 68°F WBT: 25°F SCT Picked the closest TD for the ambient temperature	78°F WBT: 20°F TD 72°F WBT: 23°F TD 68°F WBT: 25°F SCT Picked the closest TD for the ambient temperature	78°F WBT: 20°F TD 72°F WBT: 23°F TD 68°F WBT: 25°F SCT Picked the closest TD for the ambient temperature
Water-cooled condensers and Fluid Cooler Selection TD (Water cooled condenser)	Water-cooled condenser approach: 20 F Fluid cooler approach: 78°F WBT: 15°F TD 72°F WBT: 17°F TD 68°F WBT: 20°F SCT Picked the closest TD for the ambient temperature	Water-cooled condenser approach: 20 F Fluid cooler approach: 78°F WBT: 15°F TD 72°F WBT: 17°F TD 68°F WBT: 20°F SCT Picked the closest TD for the ambient temperature	Water-cooled condenser approach: 20 F Fluid cooler approach: 78°F WBT: 15°F TD 72°F WBT: 17°F TD 68°F WBT: 20°F SCT Picked the closest TD for the ambient temperature
Condenser Specific Efficiency (Air cooled condenser & Evaporative cooled condenser)	140 BTU/W for evaporative @ 100ºF SCT & 70ºF WBT 53 BTU/W for air-cooled @ 10ºF TD	140 BTU/W for evaporative @ 100ºF SCT & 70ºF WBT 53 BTU/W for air-cooled @ 10ºF TD	140 BTU/W for evaporative @ 100ºF SCT & 70ºF WBT 53 BTU/W for air-cooled @ 10ºF TD
Condenser Specific Efficiency (Water cooled condensers & Fluid cooler)	Fluid cooler specific efficiency: 105 Btu/W Fluid cooler pump is controlled at a fixed speed.	Fluid cooler specific efficiency: 105 Btu/W Fluid cooler pump is controlled at a fixed speed.	Fluid cooler specific efficiency: 105 Btu/W Fluid cooler pump is controlled at a fixed speed.
Condenser Fan Motor Power and Efficiency	Motor power is inherent in the Base Case specific efficiency calculation.	Motor power is inherent in the Base Case specific efficiency calculation.	Motor power is inherent in the Base Case specific efficiency calculation.
Means of condenser control	Fixed setpoint strategy Air cooled: fan cycling based on pressure Evaporative cooled: two-speed fan control	Fixed setpoint strategy Air cooled: fan cycling based on pressure Evaporative cooled: two-speed fan control	Fixed setpoint strategy Air cooled: fan cycling based on pressure Evaporative cooled: two-speed fan control
Minimum condensing temperature setpoint	85°F SCT	80°F SCT	80°F SCT
Pressure drop at SDT and SCT	2°F	2°F	2°F
Heat recovery (air)	None	None	None
Heat recovery (domestic hot water heating)	None	None	None
Walk-ins and Unit coolers Information			

Fan Motor Type	Electronically commutated motors (ECM) in walk-in evaporator coils for all fan motors < 460V and < 1 hp. Otherwise, PSC fan motors.	Electronically commutated motors (ECM) in walk-in evaporator coils for all fan motors < 460V and < 1 hp. Otherwise, PSC fan motors.	Electronically commutated motors (ECM) in walk-in evaporator coils for all fan motors < 460V and < 1 hp. Otherwise, PSC fan motors.
Walk-in insulation level	R-25 for cooler walls, ceiling and doors R-32 for freezer walls, ceiling and doors R-28 for freezer floors	R-25 for cooler walls, ceiling and doors R-32 for freezer walls, ceiling and doors R-28 for freezer floors	R-25 for cooler walls, ceiling and doors R-32 for freezer walls, ceiling and doors R-28 for freezer floors
Walk-ins served by System A	LT Suction Group: (1) Freezer, (18 x 8 x 9) ft^3 MT Suction Group: (1) Dairy Cooler, (43 x 8 x 9) ft^3 (1) Produce Cooler, (11 x 8 x 9) ft^3	MT Suction Group: (1) Deli Cooler, (8 x 8 x 10) ft^3 (1) Wine Cooler, (11 x 11 x 10) ft^3 (1) Produce Cooler, (20 x 20 x 10) ft^3	LT Suction Group: (1) ½ POS Freezer #1 (19 x 80 x 22) ft^3 (1) ½ POS Freezer #2 (19 x 80 x 22) ft^3 (1) Bakery Freezer, (19 x 33 x 20) ft^3
Walk-ins served by System B	None	MT Suction Group: (1) Bakery Retarder, (10 x 7 x 10) ft^3 (1) Dairy Cooler, (41 x 16 x 10) ft^3 (1) Meat Cooler, (15 x 36 x 10) ft^3 (1) Meat Holding, (13 x 7 x 10) ft^3	MT Suction Group: (1) Meat Cooler, 1,504 ft^2, Height: 20 ft, odd-shaped (1) Produce Cooler, (36 x 44 x 22) ft^3 (1) Meat Prep, 1,162 ft^2, Height: 10 ft , odd-shaped (1) Dairy Cooler, (12 x 32 x 10) ft^3 (1) Bakery Cooler, (11 x 28 x 10) ft^3 (1) ½ POS Cooler (19 x 80 x 22) ft^3
Walk-ins served by System C	None	LT Suction Group: (1) Bakery Freezer, (18 x 18 x 10) ft^3 (1) Grocery Freezer, (36 x 15 x 10) ft^3	LT Suction Group: (1) ½ POS Freezer #1 (19 x 80 x 22) ft^3 (1) ½ POS Freezer #2, (19 x 80 x 22) ft^3 (1) Bakery Freezer, (11 x 28 x 10) ft^3
Walk-ins served by System D	None	None	MT Suction Group: (1) Meat Cooler, 1,504 ft^2, Height:

			20 ft, odd-shaped (1) Produce Cooler, (36 x 44 x 22) ft^3 (1) Deli Prep, 400 ft^2, Height: 10 ft, odd-shaped (1) Rotisserie Prep, 188 ft^2, Height: 10 ft, odd-shaped (1) Bakery Cooler, (11 x 28 x 10) ft^3 (1) ½ POS Cooler (19 x 80 x 22) ft^3
Fan Motor Power	Fan motor input wattage	Fan motor input wattage	Fan motor input wattage
Fan Control	Continuous operation with no VFD	Continuous operation with no VFD	Continuous operation with no VFD
Liquid-suction heat exchangers (direct refrigerant)	None	None	None
Leaving Gas Temperature	LT: 30°F MT: 20°F	LT: 30°F MT: 20°F	LT: 30°F MT: 20°F
Defrost Assumptions	Defrost Load: 70% of design load Defrost Effectiveness: 15% Quantity of Defrosts per Day: 4 Defrost Duration: 15 minutes	Defrost Load: 70% of design load Defrost Effectiveness: 15% Quantity of Defrosts per Day: 4 Defrost Duration: 15 minutes	Defrost Load: 70% of design load Defrost Effectiveness: 15% Quantity of Defrosts per Day: 4 Defrost Duration: 15 minutes
Display Case Information			
Case light wattage	Fixture efficiency – standard offer published by manufacturer.	Fixture efficiency – standard offer published by manufacturer.	Fixture efficiency – standard offer published by manufacturer.
Case lighting configuration assumptions	For multi-deck meat and deli cases: 2 row canopy lights + all shelves lighted (if available) For multi-deck dairy, beverage and produce cases: 2 row canopy lights + no lighted shelves	For multi-deck meat and deli cases: 2 row canopy lights + all shelves lighted (if available) For multi-deck dairy, beverage and produce cases: 2 row canopy lights + no lighted shelves	For multi-deck meat and deli cases: 2 row canopy lights + all shelves lighted (if available) For multi-deck dairy, beverage and produce cases: 2 row canopy lights + no lighted shelves
Display Case Reach-in Glass Door anti-sweat heater type & wattage	Low wattage doors	Low wattage doors	Low wattage doors
Display Case Reach-in Glass Door anti-sweat heater control on glass door cases	None	None	None
Night curtains/covers	None	None	None

Indirect Cooling for Display Cases	None	None	None
Defrost Type	Electric, Off Cycle or Hot Gas	Electric, Off Cycle or Hot Gas	Electric, Off Cycle or Hot Gas
Defrost Control	Time initiated, per manufacturers frequency. Temperature terminated on LT electric defrost only	Time initiated, per manufacturers frequency. Temperature terminated on LT electric defrost only	Time initiated, per manufacturers frequency. Temperature terminated on LT electric defrost only
Liquid-suction heat exchangers (direct refrigerant)	None	None	None
Electronic expansion valves/case controllers	None	None	None
Leaving Gas Temperature	LT: 30°F MT: 20°F	LT: 30°F MT: 20°F	LT: 30°F MT: 20°F
Display Case served by System A	MT Suction Group: (1) Kysor Warren HQD6L, MD Produce, Case Length: 16 ft (1) Kysor Warren QD6L, MD Meat, Case Length: 24 ft (1) Kysor Warren QD6NL, MD Deli, Case Length: 24 ft (1) Kysor Warren HQD6L, MD Deli, Case Length: 8 ft (1) Kysor Warren HQD6L, MD Deli, Case Length: 24 ft (1) Kysor Warren HQD6L, MD Beverage, Case Length: 8 ft (1) Kysor Warren B33, MD Cake, Case Length: 8 ft (1) Kysor Warren HQD6L, MD Package, Case Length: 12 ft (1) Kysor Warren QDV5V, RI Dairy, Number of Doors: 7	MT Suction Group: (1) Sushi Bar, MD Case, Case Length: 3 ft (1) Sushi, MD Case, Case Length: 8 ft (1) Sandwich Prep, MD Case, Case Length: 10 ft (1) Hussmann RGPSM, Pizza, Case Length: 8 ft (1) Hussmann ESBDVS, Service Deli, Case Length: 28 ft (1) Hussmann RBB, Cheese Back Bar, Case Length: 12 ft (1) Hussmann Q1+Wedges, SS Cheese, Case Length: 26 ft (1) Hussmann RI4, Cheese Table, Case Length: 12 ft (1) Hussmann D5XLEP, SS Deli, Case Length: 32 ft (1) Hussmann D5XLEP, Beverage, Case Length: 56 ft (1) Hussmann E3, Grab-N-Go, Case Length: 16 ft	LT Suction Group: (1) Hill Phoenix ONZ, Dual Temp Island Case Length: 160 ft Evaporator Temperature: -22°F Discharge Temperature: -13°F Fan Power: 11 W/ft No. Fans per 12 ft: 4 Canopy Light W: None Shelf Light W: None No. Canopy Lights: None No. Shelves w/ Lights: None Defrost Type: Hot Gas Defrost Freq x Duration: 2 x 20 minutes
Display Case served by System B	None	(1) Structural Concepts, HVOU,	MT Suction Group:

		Bakery Service, Case Length: 16 ft (1) Beverage Air Corp, CDR3950, Service/Cookie, Case Length: 5 ft (1) Beverage Air Corp, CDR3968, Refrigerated Cash Stand, Case Length: 5 ft (1) Hussmann RI3, Bakery, Case Length: 10 ft (1) Hussmann D5XLEP, Egg, Case Length: 12 ft (1) Hussmann D5XLEP, Dairy, Case Length: 70 ft (1) Hussmann D5XLEP, Pizza, Case Length: 6 ft (1) Hussmann E2V, Fish, Case Length: 8 ft (1) Hussmann DSF, Service Fish, Case Length: 12 ft (1) Hussmann ESGMVS, Service Meat, Case Length: 12 ft	(1) Hill Phoenix OMZ, Single-deck Deli, Case Length: 80 ft (1) Hill Phoenix O3.75UM, Deli Island, Case Length: 120 ft
Display Case served by System C	None	LT Suction Group: (1) Hussmann RL, Reach-in Ice Cream, Case Length: 58 doors (1) Hussmann RL, Reach-in Frozen Food, Case Length: 59 doors	LT Suction Group: (1) Hill Phoenix ONZ, Dual Temp Island, Case Length: 80 ft (1) Hussmann RID, Roll-in Bakery, Case Length: 12 ft
Display Case served by System D	None	None	MT Suction Group: (1) Hill Phoenix OMZ, Single-deck Deli, Case Length: 56 ft (1) Hill Phoenix OMZ, Single-deck Deli, Case Length: 36 ft
Point of Sale (POS) Boxes with Reach-in (RI) Glass Doors	None	None	(2) POS Freezer with RI Glass Doors, Number of Doors: 54 ea. Freezer (1) POS Cooler with RI Glass

			Doors, Number of Doors: 59
POS Box Reach-in Glass Door anti-sweat heater type & wattage	Low wattage doors	Low wattage doors	Low wattage doors
Operation, Occupancy & Schedules Information			
Facility size	10,000 ft^2 (gross area)	60,700 ft^2 (gross area) 57,200 ft^2 (conditioned area)	150,000 ft^2 (gross area)
Main Sales Interior Spaces Height	15 ft	28 ft	28 ft
Building HVAC Information			
Packaged rooftop units (RTU)	Packaged Rooftop Units with EER per Title 24 standards No. of Packaged Rooftop Units: 3	Packaged Rooftop Units with EER per Title 24 standards No. of Packaged Rooftop Units: 8	Packaged Rooftop Units with EER per Title 24 standards No. of Packaged Rooftop Units: 18
Main Air Handling Unit	None	(1) Main Air Handler Unit for Main Sales area with supply fan motor efficiency per Title 24.	None
Fan Operation	Always On	Always On	Always on if 24 hour store, follow store hours if non-24 hours, with pre-opening allowance and ambient override allowed.
Temperature Control	Two fixed setpoints No night setpoint adjustment	Two fixed setpoints No night setpoint adjustment	Two fixed setpoints No night setpoint adjustment
Main Sales HVAC Cooling Setpoint	74°F	74°F	74°F
Main Sales HVAC Heating Setpoint	70°F	70°F	70°F
Ventilation Control	Always On	Always On	Always On
Envelope & Lighting			
Exterior Roof Construction	U-factor based on Title 24 – Table 143-A Prescriptive Envelope Criteria for Roofs	U-factor based on Title 24 – Table 143-A Prescriptive Envelope Criteria for Roofs	U-factor based on Title 24 – Table 143-A Prescriptive Envelope Criteria for Roofs
Exterior Wall Construction	U-factor based on Title 24 – Table 143-A Prescriptive Envelope Criteria for Walls	U-factor based on Title 24 – Table 143-A Prescriptive Envelope Criteria for Walls	U-factor based on Title 24 – Table 143-A Prescriptive Envelope Criteria for Walls
Roof Absorptivity	AGED Reflectance = 0.55 (Title 24 – Table 143-A)	AGED Reflectance = 0.55 (Title 24 – Table 143-A)	AGED Reflectance = 0.55 (Title 24 – Table 143-A)

Skylights	No Skylights. Skylights are not required for enclosed spaces with ceiling heights equal to or less than 15 feet.	Approximately 1.65% (3.3% minimum skylight area to skylit ratio * 50% of floor area) of sales area is covered by skylights.	Approximately 1.65% (3.3% minimum skylight area to skylit ratio * 50% of floor area) of sales area is covered by skylights.
Skylight Characteristics	No Skylights	Skylight Type: Glass, curb U-factor: 1.11 SHGC: 0.46 Visible Transmittance: 0.552 Light setpoint: 75 foot-candles	Skylight Type: Glass, curb U-factor: 1.11 SHGC: 0.46 Visible Transmittance: 0.552 Light setpoint: 55 footcandles
Daylighting Controls	None	Power consumption reduction of lighting by at least 2/3 in response to available daylight. (Three step control: 100%, 67%, 33% & 0%)	Power consumption reduction of lighting by at least 2/3 in response to available daylight. (Three step control: 100%, 67%, 33% & 0%)
Lighting Power Density (except for Walk-in Coolers & Freezers)	1.5 W/ ft^2 (Complete Building Method)	1.5 W/ ft^2 (Complete Building Method)	1.5 W/ ft^2 (Complete Building Method)
Lighting Power Density (Walk-in Coolers & Freezers)	0.7 W/ ft^2	0.7 W/ ft^2	0.7 W/ ft^2
Lighting Control (Main Sales)	Non-24 hours stores: 50% reduction during non-operating hours	24 hr stores: Always ON 100%	Non-24 hours stores: 50% reduction during non-operating hours

9. Appendix D: Refrigeration Schedules and Equipment Sizing

9.1 Refrigeration Schedules

Figure 59, Figure 60, and Figure 61 summarize the refrigeration load schedules employed for this analysis

Suction Group ID - Central	Suction Group ID - Distributed	Load ID	Size lxwxh #drs or ft	Description	Type	Load	Evap Temp	Disc Air Temp	Def Type
ALT	ALT	ALT-1	18x8x9	Freezer	Walk-in Freezer	12,100	-20	-10	Electric
ALT	ALT	ALT-2	8	RI Icecream	Display Case	11,160	-23	-16	Electric
ALT	ALT	ALT-3	8	RI Frozen Food 1	Display Case	10,680	-23	-16	Electric
ALT	ALT	ALT-4	8	RI Frozen Food 2	Display Case	10,680	-18	-9	Electric
ALT	ALT	ALT-5	8	RI Frozen Food 3	Display Case	10,680	-18	-9	Electric
ALT	ALT	ALT-6	8	RI Frozen Food 4	Display Case	10,680	-18	-9	Electric
ALT	ALT	ALT-7	8	RI Frozen Food 5	Display Case	10,680	-18	-9	Electric
						76,660	**-25°F Design SST**		
BMT	BMT_1	BMT-1	43x8x9	Dairy Cooler	Walk-in Cooler	21,400	+24	+34	Off Cycle
BMT	BMT_2	BMT-2	11x8x9	Produce Cooler	Walk-in Cooler	5,600	+50	+60	Off Cycle
BMT	BMT_2	BMT-3	32	MD Produce	Display Case	43,808	+30	+35	Off Cycle
BMT	BMT_1	BMT-4	40	MD Meat	Display Case	55,400	+23	+33	Off Cycle
BMT	BMT_2	BMT-5	32	MD Deli - 1	Display Case	42,208	+23	+33	Off Cycle
BMT	BMT_2	BMT-6	32	MD Deli - 2	Display Case	43,808	+23	+33	Off Cycle
BMT	BMT_2	BMT-7	24	MD Deli - 3	Display Case	32,856	+30	+35	Off Cycle
BMT	BMT_1	BMT-8	20	MD Beverage	Display Case	27,380	+30	+35	Off Cycle
BMT	BMT_1	BMT-9	8	MD Cake	Display Case	8,000	+30	+35	Off Cycle
BMT	BMT_1	BMT-10	24	MD Package	Display Case	32,856	+23	+33	Off Cycle
BMT	BMT_1	BMT-11	11	Reach-in Dairy	Display Case	8,250	+30	+35	Off Cycle
						321,566	**21°F Design SST**		

Figure 59: Small supermarket refrigeration schedule

DRAFT

Suction Group ID - Central	Suction Group ID - Distributed	Load ID	Size lxwxh #drs or ft	Description	Type	Load	Evap Temp	Disc Air Temp	Def Type
AMT	AMT_1	AMT-1	8x8x10	Deli Cooler	Walk-in Cooler	5,900	+26	+36	Off Cycle
AMT	AMT_1	AMT-2	11x11x10	Wine Cooler	Walk-in Cooler	9,260	+26	+36	Off Cycle
AMT	AMT_2	AMT-3	20x20x10	Produce Cooler	Walk-in Cooler	21,800	+26	+36	Off Cycle
AMT	AMT_1	AMT-4	780	Meat_Prep	Walk-in Cooler	78,400	+36	+50	Off Cycle
AMT	AMT_2	AMT-5	3	Sushi Bar	Display Case	3,600	+20	+28	Off Cycle
AMT	AMT_2	AMT-6	8	Sushi	Display Case	9,400	+20	+24	Off Cycle
AMT	AMT_2	AMT-7	10	Sandwich Prep	Display Case	6,750	+20	+30	Off Cycle
AMT	AMT_2	AMT-8	8	MD Pizza, Front	Display Case	8,200	+20	+30	Off Cycle
AMT	AMT_1	AMT-9	20	Service Deli	Display Case	6,400	+20	+25	Off Cycle
AMT	AMT_1	AMT-10	12	Cheese Back Bar	Display Case	18,600	+20	+30	Off Cycle
AMT	AMT_1	AMT-11	26	Self-serve Cheese	Display Case	17,160	+20	+27	Off Cycle
AMT	AMT_1	AMT-12	12	Cheese Table	Display Case	27,500	+20	+27	Off Cycle
AMT	AMT_1	AMT-13	32	MD Self-serve Deli	Display Case	48,320	+26	+30	Off Cycle
AMT	AMT_2	AMT-14	48	MD Beverage	Display Case	72,480	+26	+30	Off Cycle
AMT	AMT_2	AMT-15	16	Grab-N-Go	Display Case	18,880	+21	+29	Off Cycle
AMT	AMT_1	AMT-16	20	Meat 1	Display Case	29,800	+26	+30	Off Cycle
AMT	AMT_1	AMT-17	20	Meat 2	Display Case	29,800	+26	+30	Off Cycle
AMT	AMT_2	AMT-18	24	Lunch Meat 1	Display Case	36,240	+26	+30	Off Cycle
AMT	AMT_2	AMT-19	28	Lunch Meat 2	Display Case	42,280	+26	+30	Off Cycle
			287			**490,770**	**18°F Design SST**		
BMT	BMT_1	BMT-1	10x7x10	Bakery Retarder	Walk-in Cooler	6,250	+26	+36	Off Cycle
BMT	BMT_2	BMT-2	41x16x10	Dairy Cooler	Walk-in Cooler	35,550	+26	+36	Off Cycle
BMT	BMT_2	BMT-3	15x36x10	Meat Cooler	Walk-in Cooler	30,150	+26	+36	Off Cycle
BMT	BMT_1	BMT-4	13x7x10	Meat Holding	Walk-in Cooler	7,550	+26	+36	Off Cycle
BMT	BMT_1	BMT-5	10x7x10	Floral_Cooler	Walk-in Cooler	5,800	+32	+38	Off Cycle
BMT	BMT_1	BMT-6	16	Bakery Service	Display Case	17,520	+20	+25	Off Cycle
BMT	BMT_1	BMT-7	5	Service Cookie	Display Case	1,490	+30	+35	Off Cycle
BMT	BMT_1	BMT-8	5	Refrigerated Stand	Display Case	1,650	+30	+35	Off Cycle
BMT	BMT_1	BMT-9	10	Bakery	Display Case	18,200	+20	+27	Off Cycle
BMT	BMT_1	BMT-10	12	MD Egg	Display Case	18,120	+26	+30	Off Cycle
BMT	BMT_2	BMT-11	64	MD Dairy	Display Case	96,640	+26	+30	Off Cycle
BMT	BMT_1	BMT-12	6	MD Pizza	Display Case	9,060	+26	+30	Off Cycle
BMT	BMT_1	BMT-13	8	MD Fish	Display Case	7,560	+18	+25	Off Cycle
BMT	BMT_1	BMT-14	12	Service Fish	Display Case	4,800	+20	+28	Off Cycle
BMT	BMT_2	BMT-15	12	Service Meat	Display Case	3,840	+22	+27	Off Cycle
BMT	BMT_2	BMT-16	28	Produce 1	Display Case	29,400	+24	+33	Off Cycle
BMT	BMT_2	BMT-17	32	Produce 2	Display Case	33,600	+24	+33	Off Cycle
BMT	BMT_2	BMT-18	16	ProducePromo	Display Case	10,880	+26	+31	Off Cycle
BMT	BMT_2	BMT-19	6	Produce End	Display Case	10,710	+24	+32	Off Cycle
BMT	BMT_1	BMT-20	20	Produce 3	Display Case	35,700	+24	+32	Off Cycle
BMT	BMT_1	BMT-21	24	Produce 4	Display Case	42,840	+24	+32	Off Cycle
BMT	BMT_1	BMT-22	20	Produce 5	Display Case	27,800	+28	+31	Off Cycle
BMT	BMT_1	BMT-23	6	JuiceEnd	Display Case	10,710	+24	+32	Off Cycle
BMT	BMT_1	BMT-24	8	Natural Foods	Display Case	12,240	+26	+30	Off Cycle
BMT	BMT_1	BMT-25	12	ProducePromo_2	Display Case	14,160	+21	+29	Off Cycle
			322			**492,220**	**16°F Design SST**		
CLT	CLT	CLT-1	18x18x10	Bakery Freezer	Walk-in Freezer	20,300	-15	-5	Hot Gas
CLT	CLT	CLT-2	12x8x10	Deli Freezer	Walk-in Freezer	8,600	-15	-5	Hot Gas
CLT	CLT	CLT-3	36x15x10	Grocery Freezer	Walk-in Freezer	30,250	-15	-5	Hot Gas
CLT	CLT	CLT-4	62	Reach-in Ice Cream	Display Case	84,940	-17	-12	Hot Gas
CLT	CLT	CLT-5	62	Reach-in Frozen Food	Display Case	80,600	-9	-5	Hot Gas
CLT	CLT	CLT-6	(1/2) 12 + (1) END	DUAL TEMP - 1	Display Case	6,570	-20	-12	Hot Gas
CLT	CLT	CLT-7	(1/2) 12 + (1) END	DUAL TEMP - 2	Display Case	6,570	-20	-12	Hot Gas
CLT	CLT	CLT-8	(1/2) 16 + (1) END	DUAL TEMP - 3	Display Case	7,870	-20	-12	Hot Gas
CLT	CLT	CLT-9	(1/2) 16 + (1) END	DUAL TEMP - 4	Display Case	7,870	-20	-12	Hot Gas
CLT	CLT	CLT-10	(1/2) 12 + (1) END	DUAL TEMP - 5	Display Case	6,570	-20	-12	Hot Gas
CLT	CLT	CLT-11	(1/2) 12 + (1) END	DUAL TEMP - 6	Display Case	6,570	-20	-12	Hot Gas
CLT	CLT	CLT-12	6	NATURAL FOODS	Display Case	8,220	-9	-5	Hot Gas
						274,930	**-22°F Design SST**		

Figure 60: Large supermarket refrigeration schedule

Suction Group ID - Central	Suction Group ID - Distributed	Load ID	Size lxwxh or sf #drs or ft	Description	Type	Load	Evap Temp	Disc Air Temp	Def Type
ALT	ALT	ALT-1	19x80x22	1/2 POS Freezer #1	Walk-in Freezer	136,000	-27	-22	Electric
ALT	ALT	ALT-2	19x80x22	1/2 POS Freezer #2	Walk-in Freezer	118,000	-16	-11	Electric
ALT	ALT	ALT1-3	160	Dual Temp Island	Display Case	68,000	-25	-10	Electric
ALT	ALT	ALT1-4	19x33x20	Bakery Freezer	Walk-in Freezer	32,000	-15	-10	Electric
						354,000		**-29°F Design SST**	
BMT	BMT_1	BMT-1	1504 sf	Meat Cooler	Walk-in Cooler	63,000	+20	+24	Off Cycle
BMT	BMT_2	BMT-2	36x44x22	Produce Cooler	Walk-in Cooler	97,000	+31	+32	Off Cycle
BMT	BMT_2	BMT-3	1162 sf	Meat Prep	Walk-in Cooler	70,000	+35	+39	Off Cycle
BMT	BMT_2	BMT-4	12x32x10	Dairy Cooler	Walk-in Cooler	47,600	+26	+29	Off Cycle
BMT	BMT_2	BMT-5	11x28x10	Bakery Cooler	Walk-in Cooler	12,250	+26	+29	Off Cycle
BMT	BMT_1	BMT-6	19x80x22	1/2 POS Cooler	Walk-in Cooler	94,000	+24	+28	Off Cycle
BMT	BMT_1	BMT-7	60	Meat	Display Case	25,500	+24	+28	Off Cycle
BMT	BMT_1	BMT-8	32	Deli	Display Case	13,600	+24	+28	Off Cycle
						422,950		**18°F Design SST**	
CLT	CLT1	CLT1-1	19x80x22	1/2 POS Freezer #1	Walk-in Freezer	136,000	-27	-22	Electric
CLT	CLT1	CLT1-2	80	Dual Temp Island	Display Case	34,000	-25	-10	Electric
CLT	CLT1	CLT1-3	19x80x22	1/2 POS Freezer #2	Walk-in Freezer	120,650	-15	-11	Electric
CLT	CLT1	CLT1-4	19x33x20	Bakery Freezer	Walk-in Freezer	32,000	-15	-10	Electric
CLT	CLT1	CLT1-5	12	Roll-in Bakery	Display Case	32,400	+12	+28	Electric
						355,050		**-29°F Design SST**	
DMT	DMT_1	DMT-1	1504 sf	Meat Cooler	Walk-in Cooler	63,000	+20	+24	Off Cycle
DMT	DMT_1	DMT-2	36x44x22	Produce Cooler	Walk-in Cooler	97,000	+31	+32	Off Cycle
DMT	DMT_2	DMT-3	400 sf	Deli Prep	Walk-in Cooler	32,890	+35	+37	Off Cycle
DMT	DMT_2	DMT-4	188 sf	Rotisserie Prep	Walk-in Cooler	11,500	+35	+40	Off Cycle
DMT	DMT_2	DMT-5	11x28x10	Bakery Cooler	Walk-in Cooler	12,250	+26	+29	Off Cycle
DMT	DMT_2	DMT-6	19x80x22	1/2 POS Cooler	Walk-in Cooler	94,000	+24	+28	Off Cycle
DMT	DMT_1	DMT-7	32	Produce 1	Display Case	35,200	+28	+32	Off Cycle
DMT	DMT_2	DMT-8	36	Dairy	Display Case	39,600	+21	+32	Off Cycle
						385,440		**18°F Design SST**	

Figure 61: Big-box store refrigeration schedule

9.2 Equipment Sizing per Climate Zone

Equipment sizing was established based on typical loads developed for representative new store designs for the three supermarket prototypes. The design loads for the representative stores were informed by actual supermarket projects completed in California. Loads that were accounted for in the equipment sizing include walk-in refrigerated boxes and refrigerated display cases. Large point-of-sale boxes with reach-in glass doors were included only in the equipment sizing for the Big Box Food Store. In the equipment selection process, a 1.10 safety factor was used for low temperature suction groups and a 1.20 safety factor was used for medium temperature suction groups. The refrigeration systems for each of the prototype supermarkets were sized using design climate data from the 2008 Joint Appendices. For calculating state-wide savings, two system sizes were developed to typify standard design practice in the California climate zones that have the majority of supermarkets in the state. Figure 62 describes the three designs, and lists the climate zones where the designs were simulated.

Design	Climate Type	Design City	Design (0.1%) DBT/WBT	Simulated in Climate Zones
1	Mild Temperature	Santa Maria	90°F/67°F	CTZ01 - Arcata CTZ03 – Oakland CTZ05 – Santa Maria CTZ07 – San Diego (Lindbergh)
2	Medium/Hot-Temperature	Sacramento	104°F/74°F	CTZ08 – Fullerton CTZ10 – Riverside CTZ12 – Sacramento Executive Airport CTZ13 – Fresno CTZ14 – Palmdale CTZ15 – Palm Springs

Figure 62: Description of two design climate zones

10. Appendix E: Charge Size and Leak Rate Assumptions for Direct Emissions

To assess the direct greenhouse gas impacts (i.e., refrigerant emissions) of centralized direct expansion (DX) systems, distributed systems, and secondary loop systems, assumptions on system charge size and leak rates were developed, as presented in Table 1 and Table 2. Assumptions regarding store size and cooling capacity are consistent with those defined under the base case.

Table 1: Assumptions on Charge Size

System Configuration	Cooling Capacity (BTU/hr)	Store Size (sq ft)	Condenser Type	Centralized DX (lbs)	Distributed (lbs)	Secondary Loop (lbs)
Small Supermarket	249,353	10,000	Air	725	360	200
			Evaporative	800	400	220
			Fluid	435	215	120
Large Supermarket	1,257,920	60,000	Air	3,655	1,830	1,015
			Evaporative	4,020	2,015	1,115
			Fluid	2,195	1,100	610
Big Box Food Store	1,517,440	150,000	Air	4,410	2,205	1,225
			Evaporative	4,850	2,425	1,350
			Fluid	2,645	1,325	735

Table 2: Assumptions on Leak Rates

Leak Rate (percent of charge per year)	Centralized DX	Distributed	Secondary Loop
Average	18%	15%	10%
Range (of averages)	15% - 25%	10% - 15%	5% - 15%

The above assumptions were developed based on an in-depth review of available literature on system charge sizes and leak rates, as well as through consultation with equipment manufacturers and other industry experts. The remainder of this appendix outlines the specific sources and methodologies used in developing these assumptions, as well as the limitations that should be considered.

10.1 Summary of Information Obtained on Charge Size and Leak Rates

ICF reviewed the following sources to compile estimates on charge size and leak rates for DX systems, distributed systems, and secondary loop systems:

- Armines. 2009. Inventory of Direct and Indirect GHG Emissions from Stationary Air Conditioning and Refrigeration Sources, with Special Emphasis on Retail Food Refrigeration and Unitary Air Conditioning. Prepared for State of California Air Resources Board. March 2009.

- Baxter, Van D. 2003. IEA Annex 26: Advanced Supermarket Refrigeration/Heat Recovery Systems. Oak Ridge National Laboratory. Available online at, http://www.ornl.gov/~webworks/cppr/y2003/rpt/117000.pdf.
- California Air Resource Board (CARB). 2009. *Initial Statement of Reasons for Proposed Rulemaking.* Prepared by C. Seidler, B Baythavong, G Gallagher, and K Bowers of the California Air Resource Board, Research Division. October 23, 2009. Available online at, http://www.arb.ca.gov/cc/reftrack/reftrackrefs.htm
- Heschong Mahone Group, Inc. and CTG Energetics, Inc. 2008. White Paper on Approaches to Reducing Leakage and Improving the Performance of Supermarket Refrigeration Systems. Prepared for the Southern California Edison.
- Intergovernmental Panel on Climate Change/Technical and Economic Assessment Panel (IPCC/TEAP). 2006. *2006 Report of the Refrigeration, Air Conditioning and Heat Pumps Technical Options Committee.*
- Minea, Vasile. 2007. Supermarket Refrigeration System with Completely Secondary Loops. *ASHRAE Journal.* September 2007.
- Sand, James R, Steven K. Fischer, Van D. Baxter. 1997. Energy and Global Warming Impacts of HFC Refrigerants and Emerging Technologies. Oak Ridge National Laboratory, sponsored by Alternative Fluorocarbons Environmental Acceptability Study (AFEAS), U.S. Department of Energy. Available online at http://www.ornl.gov/sci/engineering_science_technology/eere_research_reports/electrically_driven_heat_pumps/fluids_development/cfc_and_hcfc_replacements/tewi_3/tewi_3.pdf
- Southern California Edison (SCE) and Foster-Miller Inc. 2004. Investigation of Secondary Loop Supermarket Refrigeration Systems. Prepared by Faramarzi, R. and D Walker for the California Energy Commission. March 2004.
- U.S. Environmental Protection Agency. 2010. GreenChill's November Webinar: Condenser Innovations for Commercial Refrigeration. Presented by Keilly Witman, U.S. EPA; Dustan Atkinson, Heatcraft Refrigerant Products; Harrison Horning, Hannaford Bros. Co; Jeff Waller, Hussmann; Paul Noreen, Muller Industries; Steve Hagen, Fresh & Easy. Available online at, https://meetingvisuals.webex.com/meetingvisuals/ldr.php?AT=pb&SP=MC&rID=59191997&rKey=adf5ccb68958e17d

In addition to the above sources, the following equipment manufacturers and sustainability resource planning firms were contacted: Hill Phoenix, Hussmann, Kysor/Warren, and Verisae.

Table 3 through Table 8 summarize the information compiled from industry contacts and published sources. It should be noted that data were often converted and manipulated to provide comparable units and figures. In addition, the context in which estimates were identified, as well as their relevance to the systems being modeled in this analysis vary significantly across sources, as explained by the notes provided in the tables.

Table 3: Sales Area and Cooling Capacity of a Typical Supermarket

Source	Sales area (sq ft)	Cooling Capacity (BTU/hr)[a]			Cooling Capacity/ Sales Area
		Medium Temp (MT)	Low Temp (LT)	Total	
Armines (2009)	47,000	764,000	573,000	1,338,000[b]	28
HMG and CTG (2008)	40,000 – 60,000	901,000	300,000	1,201,000	24

[a] Rounded to the nearest thousand.

[b] Includes cooling capacity from condensing units and stand-alone equipment, which total 160,000 BTU/hr (47 kW).

Table 4: Relationship between Sales Area and Refrigerant Charge

Source	Charge/Sales Area (lb/sq ft)	Notes
Armines (2009)	0.074	Estimate for 2004. Noted that this ratio increased by 50% between 1960 and 1990, likely due to the changing trend in store size.
Sand et al. (1997)	0.08-0.12	Noted as a general rule of thumb.

Table 5: Relationship between Refrigerant Charge and Cooling Capacity

Source	System Type	Charge/Cooling Capacity (lb/BTU/hr)	
Armines (2009)	Centralized DX	1.81×10^{-3} (MT)	2.56×10^{-3} [a]
Armines (2009)	Centralized DX	3.55×10^{-3} (LT)	
Armines (2009)	Secondary Loop	0.52×10^{-3} (MT)	0.63×10^{-3} [a]
Armines (2009)	Secondary Loop	0.78×10^{-3} (LT)	
Baxter (2003)	Centralized DX	2.58×10^{-3} - 3.23×10^{-3}	
HMG and CTG (2008)	Centralized DX	2.58×10^{-3} - 3.23×10^{-3}	
Minea (2007)	Centralized DX	2.68×10^{-3}	
Minea (2007)	Secondary Loop	1.05×10^{-3}	

[a] Assumes that supermarkets contain 57% MT and 43% LT refrigeration, as detailed in Table 3.

Table 6: Charge Size and Leak Rate Estimates for Average-Sized[a] Supermarkets with Centralized DX Systems

Source	Charge (lbs)	Leak Rate	Notes
Armines (2009)	3,030	18-30%	Based on 2004 CA field survey. Does not include charge associated with condensing units and stand-alone equipment (~120 lbs). Leak rate uncertainties are high for centralized systems.
Baxter (2003)	3,000	10-30%	Charge size estimate for refrigerant load of 1,120,000 BTU/hr assuming 2.68×10^{3} lbs/BTU/hr
CARB (2009)	3,500 – 5,000	15-21%	Facility charge size is calculated based on assumptions on charge size per system and number of systems per store, based on SCAQMD Rule 1415 data.

Source	Charge (lbs)	Leak Rate	Notes
Hill PHOENIX (2009)	2,000-3,000	20%	Estimate for new construction of a 45,000 ft^2 store.
HMG and CTG (2008)	2,800	15-30%	Charge is assumed to be the California average (based on CARB "Draft Concept Paper: Specifications for Commercial Refrigeration").[b] Source of leak rate estimate is not specified.
Hussmann (2009)	2,700-3,750	15%	Estimate for new construction of a 45,000 ft^2 store.
Kysor/Warren (2009)	2,500-3,000	25%	Estimate for new construction of a 45,000 ft^2 store.
Minea (2007)	2,200 – 5,500	15-30%	Source of charge size and leak rate estimates are unclear.
SCE & Foster-Miller (2004)	3,000 – 5,000	30-50%	Citation for leak rate estimate is Sand et al. (1997), which reports a historic average leak rate of 30% with an achievable leak rate of 10% through aggressive maintenance practices. Source of 50% leak rate is unclear. Source of charge size estimate is also unclear.
Verisae (2009)	2,500-3,000	20%	Estimate for new construction of a 45,000 ft^2 store

[a] An average-sized supermarket is assumed to be roughly 45,000-60,000 ft^2. Not all sources identified a corresponding store size in conjunction with charge size estimates.

[b] Report available at http://www.arb.ca.gov/cc/hgwpss/meetings/021508/RWC_Commercial_Refrig_Draft_Concept_Paper.pdf

Table 7: Equipment Manufacturer Estimates for Charge Size and Leak Rates for New 45,000 ft^2 Supermarkets with Distributed Systems

Source	Charge (lbs)	Leak Rate	Notes
Baxter (2003)	900-1,800	5%	Charge calculated by assuming charge is 30-60% of comparable DX system; dependent on the condenser type.
Hill PHOENIX (2009)	1,600	20%	Charge assumed to be 75% of comparable DX system
Hussmann (2009)	500-1,000	2-8%	Manufacturer specializes in and promotes this technology.
Kysor/Warren (2009)	1,500-1,800	10-15%	

Table 8: Charge Size and Leak Rate Estimates for Supermarkets with Secondary Loop Systems

Source	Charge (lbs)	Leak Rate	Notes
Armines (2009)	800	NA	Calculated based on average cooling capacity for supermarkets with an average sales area of 47,000 ft^2 and charge/cooling capacity ratio.
Baxter (2003)	150-450	2-10%	Charge calculated by assuming charge is 5-15% of comparable DX system; dependent on the condenser type.
Hill PHOENIX (2009)	1,200	5-10%	Estimate for new construction of a 45,000 ft^2 store. Manufacturer specializes in this technology.
Minea (2007)	1,000	5-10%	Based on a case study store with sales area of 74,842 ft^2

SCE & Foster-Miller (2004)	300-500	14.8%	Charge estimate based on" typical supermarket." Charge can be as high as 1,400 lbs if heat reclaim is used. Leak rate based on a case study.

Based on the information presented above, charge size and leak rate assumptions were developed for the baseline store types—i.e., small supermarkets,[3] large supermarkets,[4] and big box food stores.[5]

10.2 Methodology for Developing Charge Size Assumptions

While both refrigerant cooling capacity and store size (among other characteristics) impact charge size, cooling capacity was identified as a more significant variable in estimating charge. Some sources did identify ratios between charge size and store size, but such assumptions were deemed unreliable due to the changing trends in average store size and design/layout.[6] For example, Armines (2009) reported that the relationship between charge size and refrigerated sales area is constantly changing in California, having increased by 50% between 1960 and 1990. As a result, cooling capacity was selected as the primary consideration in developing charge size assumptions.

DX Systems

Based on the ratios identified in Table 5, centralized DX systems were estimated to have a charge size ranging from $2.58 \times 10^{-3} – 3.23 \times 10^{-3}$ lbs/BTU/hr. Accordingly, an average ratio of 2.9×10^{-3} lbs/BTU/hr was used to estimate charge sizes for each baseline store, as shown in Table 9.

Table 9: Charge Size Estimates for Base Case Stores with a Centralized DX System

Store	lb
Small Supermarket	725
Large Supermarket	3,655
Big Box Food Store	4,410

To vet these estimates, the values in Table 9 were compared to the values listed in Table 6. Most literature indicates that charge sizes for large supermarkets fall between 3,000 – 5,000 pounds of refrigerant. This is consistent with the estimated charge sizes of 3,655 and 4,410 pounds used in large supermarkets and big box stores, respectively. Furthermore, all major U.S. equipment manufacturers consulted for this study, which are intimately familiar with the design of new supermarket refrigeration systems in California, estimated that 45,000 ft^2 stores with newly installed systems would have a charge of close to 3,000 pounds. Since the assumed store size of the base case large supermarket is 60,000 ft^2, it is reasonable that the estimated charge size for this base case design would be slightly higher than the estimates provided by industry contacts. In addition, the information

[3] Defined as having a cooling capacity of 249,353 BTU/hr, a size of 10,000 square feet, and a cooling capacity/sales area ratio of 25.

[4] Defined as having a cooling capacity of 1,257,920 BTU/hr, a size of 60,000 square feet, and a cooling capacity/sales area ratio of 21.

[5] Defined as having a cooling capacity of 1,517,440 BTU/hr, a size of 150,000 square feet, and a cooling capacity/sales area ratio of 10.

[6] Calculated charge estimates based on refrigerant charge per sales area ratio were found to be excessively high. In contrast, literature and base case store data suggest that the correlation between cooling capacity and charge size is fairly strong.

cited in CARB (2009) is based on a robust dataset collected on refrigeration/AC equipment in California by the South Coast Air Quality Management District (SCAQMD) under Rule 1415 (Reduction of Refrigerant Emissions from Stationary Refrigeration and Air Conditioning Systems).[7] The report indicates that 90% of centralized systems in California fall in the medium category and contain an average charge size of 3,500 pounds per store. These estimates are in line with those calculated using the methodology described above.

Distributed and Secondary Loop Systems

For stores with distributed and secondary loop systems, ratios of 1.45×10^{-3} lbs/BTU/hr and 0.81×10^{-3} lbs/BTU/hr were used, respectively. The ratio for distributed systems was estimated based on the assumption that a distributed system has a charge size that ranges between 25-75% of the charge size of a corresponding centralized DX system (Hill PHOENIX 2009; Sand et al. 1997; IPCC/TEAP 2006; Baxter 2003). As a result, it was assumed for this analysis that a distributed system has a charge size that is 50% of the charge size of a corresponding centralized DX system. Secondary loop systems have a charge size 28% the charge size of a corresponding DX system; the ratio was identified based on Armines (2009) and Minea (2007).

Table 10: Charge Size (lbs) Estimates for Distributed and Secondary Loop Systems

Store	Distributed	Secondary Loop
Small Supermarket	360	200
Large Supermarket	1,830	1,015
Big Box Food Store	2,205	1,225

The calculated estimates shown in Table 10 were compared with estimates presented in Table 7 and Table 8 to confirm that they are reasonable assumptions.

Impact of the Condenser Type

Research indicates that air-cooled condensers are the most commonly used condensers in supermarket refrigeration systems. As a result, the estimates presented in the previous sections assume the use of an air-cooled condenser. However, the use of an evaporative-cooled condenser or a fluid-cooled condenser will impact the charge size of a system. Based on conversations with industry contacts (Kysor/Warren and Hussmann), as well as U.S. EPA (2010) and Baxter (2003), it is assumed that evaporative-cooled condenser require a greater charge, while fluid-cooled condensers require less charge. Specifically, evaporative-cooled condensers are assumed to have a charge size that is approximately 110% of that required for an air-cooled condenser, and fluid-cooled condensers are assumed to have a charge size that is about 60% of that required for an air-cooled condenser.

[7] The Rule 1415 data used for the CARB report were available for six years (reporting years 2000 through 2005) and consisted of approximately 16,000 records. Data reported include equipment type, charge size, leak rate, store size, and energy consumption. No data on cooling capacity are reported.

10.3 Methodology for Developing Leak Rate Assumptions

Leak rate estimates were determined based on information summarized in Table 6, Table 7, and Table 8. In particular, information cited by CARB (2009) was used as the main source for determining the leak rate of centralized DX systems, since the Rule 1415 dataset is the most robust leak rate information available at this time. System manufacturers and case studies were relied on as the main source for leak rate information associated with distributed and secondary loop systems, as these systems are less commonly used and still relatively new to the market. Table 11 summarizes the leak rate assumptions derived from the sources reviewed.

Table 11: Assumptions on Leak Rates

Leak Rate (percent of charge per year)	Centralized DX	Distributed	Secondary Loop
Average	18%	15%	10%
Range (of averages)	15% - 25%	10% - 15%	5% - 15%

10.4 Limitations and Considerations

The supermarket industry recognizes that refrigerant charge size varies significantly from manufacturer to manufacturer and store to store, and cannot be easily generalized based on one variable. Even manufacturers of the equipment cannot accurately predict the charge size of any given system and can only provide a best estimate based on the system characteristics and design. Given the complexity and uncertainty associated with estimating charge size, this methodology is intended only to provide indicative charge estimates that are reasonable for use in the study at hand.

Similarly, refrigerant leak rates vary significantly over time, and by store and system type. Generalizing an *average* leak rate of a system or store does not accurately represent an observed leak rate at a given point in time; however, observed and documented trends are useful for comparing technologies and estimating the impact of a system over its lifetime. The estimated average leak rates are believed to be reasonable for use in this analysis, and have been reviewed and accepted by leading industry stakeholders—including leading manufacturers and users of supermarket refrigeration systems.

It is important to note that the average CA store size and the average amount of cooling capacity per store in CA are constantly changing. Likewise, practices and standards associated with leak prevention and repair are not stagnant. However, the assumptions developed for this analysis are intended to be representative of the most recent documented trends in newly installed stores.

11. Appendix F: Wetbulb Sensitivity Study for Floating Head Pressure Measure

Wetbulb sensor robustness is a concern for ambient-following control for evaporative condensers. Wetbulb sensors (actually a combination of drybulb sensor and humidity sensor) generally lose calibration accuracy over time, which may lead to negative savings from ambient-following versus a fixed SCT setpoint control strategy. A supporting analysis was performed to evaluate the incremental savings from using a wetbulb-following control strategy at varying control TDs. The analysis assumes a minimum SCT of 70°F with variable speed condenser fan control. The Base Case for this analysis was a fixed SCT setpoint of 70°F with variable-speed condenser fan control. The large supermarket with central compressor configuration and evaporative condenser were used for this analysis.

The results of this analysis are presented in Figure 63:

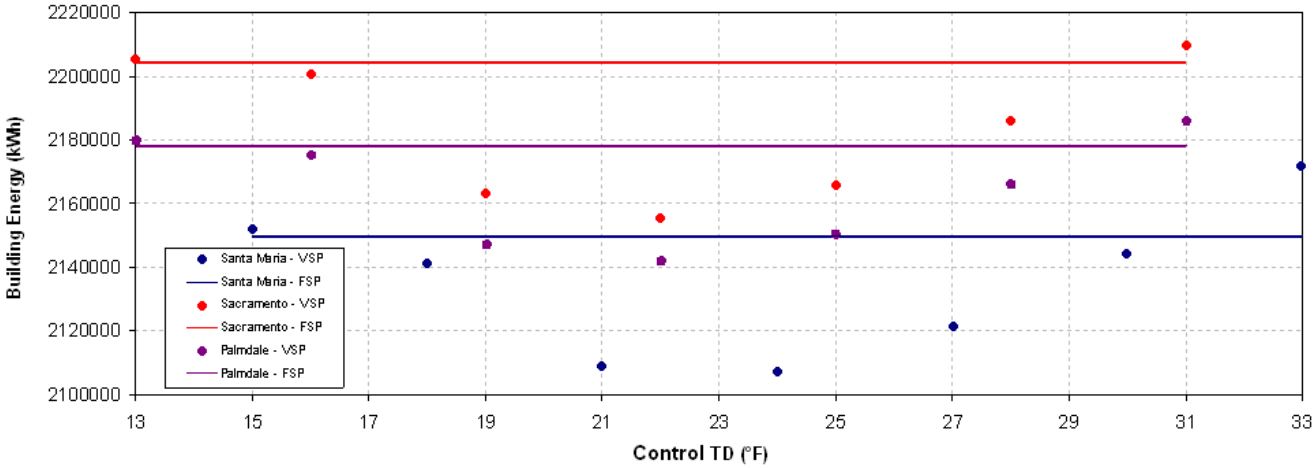

Figure 63: TD Sensitivity Analysis

Figure 63 shows that ambient-following control is still cost-effective, even if the sensor is out of calibration.

12. Appendix G: Databases from Savings By Design

12.1 Condenser Specific Efficiency

Figure 64 through Figure 65 show a database of condenser specific efficiencies utilized to calculate Base Case specific efficiency for the condenser efficiency measure. The condenser efficiencies come from new-construction projects that participated in the Savings By Design new construction incentive program. Both warehouses and supermarkets are included in the database; there is some equipment overlap between supermarkets and small refrigerated warehouses, and a concurrent Title 24 CASE study is striving to mandate condenser efficiencies. Both the supermarket and refrigerated warehouse efficiency mandates utilize the database depicted here.

Year	Utility	Project Type	Location	Configuration	Specific Efficiency (Btu/h/Watt)
2008	PG&E	Grocery	Orcutt	Air-Cooled	150
2008	PG&E	Grocery	Lompoc	Air-Cooled	150
2008	SCE	Grocery	Oxnard	Air-Cooled	150
2008	PG&E	Grocery	Santa Cruz	Air-Cooled	139
2007	SCE	Grocery	Marina Del Rey	Air-Cooled	139
2007	PG&E	Grocery	Novato	Air-Cooled	139
2007	PG&E	Grocery	Milpitas	Air-Cooled	134
2007	PG&E	Grocery	Novato	Air-Cooled	134
2007	SCE	Grocery	Marina Del Rey	Air-Cooled	130
2007	SCE	Grocery	La Verne	Air-Cooled	130
2007	PG&E	Grocery	San Jose	Air-Cooled	82
2007	PG&E	Grocery	Redwood City	Air-Cooled	82
2008	PG&E	Grocery	Santa Cruz	Air-Cooled	78
2008	PG&E	Grocery	Santa Cruz	Air-Cooled	78
2007	PG&E	Grocery	San Jose	Air-Cooled	77
2007	PG&E	Grocery	Redwood City	Air-Cooled	77
2008	PG&E	Grocery	Novato	Air-Cooled	77
2007	PG&E	Grocery	Antioche	Air-Cooled	77
2010	SDG&E	Warehouse	San Diego	Air-Cooled	76
2007	SCE	Grocery	Irvine	Air-Cooled	75
2008	SCE	Grocery	Lakewood	Air-Cooled	74
2008	SCE	Grocery	Hawthorne	Air-Cooled	74
2008	PG&E	Grocery	Pittsburg	Air-Cooled	74

2008	PG&E	Grocery	Pittsburg	Air-Cooled	74
2008	PG&E	Grocery	Pittsburg	Air-Cooled	74
2008	PG&E	Grocery	Pittsburg	Air-Cooled	74
2008	SCE	Grocery	Apple Valley	Air-Cooled	74
2008	SCE	Grocery	Apple Valley	Air-Cooled	74
2008	SCE	Grocery	Apple Valley	Air-Cooled	74
2008	SCE	Grocery	Apple Valley	Air-Cooled	74
2008	SCE	Grocery	Apple Valley	Air-Cooled	74
2008	PG&E	Grocery	Pittsburg	Air-Cooled	74
2007	SCE	Grocery	Irvine	Air-Cooled	71
2008	SCE	Grocery	Seal Beach	Air-Cooled	71
2008	SCE	Grocery	Tustin	Air-Cooled	71
2008	PG&E	Grocery	Santa Cruz	Air-Cooled	71
2007	SCE	Grocery	Claremont	Air-Cooled	62
2008	PG&E	Grocery	Santa Cruz	Air-Cooled	62
2008	PG&E	Grocery	Santa Cruz	Air-Cooled	62
2007	SCE	Grocery	Torrance	Air-Cooled	61
2008	PG&E	Grocery	Santa Cruz	Air-Cooled	60
2007	SCE	Grocery	Marina Del Rey	Air-Cooled	60
2007	SCE	Grocery	Marina Del Rey	Air-Cooled	60
2007	SCE	Grocery	La Verne	Air-Cooled	60
2007	PG&E	Grocery	Novato	Air-Cooled	60
2007	SCE	Grocery	La Verne	Air-Cooled	60
2008	PG&E	Grocery	Santa Cruz	Air-Cooled	57
2008	PG&E	Grocery	Santa Cruz	Air-Cooled	57
2007	SCE	Grocery	Norwalk	Air-Cooled	55
2008	PG&E	Grocery	Santa Cruz	Air-Cooled	54
2008	PG&E	Grocery	Santa Cruz	Air-Cooled	54
2007	SCE	Grocery	Norwalk	Air-Cooled	51
2010	SCE	Warehouse	Buena Park	Air-Cooled	49.6
2007	SCE	Grocery	Claremont	Air-Cooled	48
2008	SCE	Grocery	Long Beach	Air-Cooled	48
2008	PG&E	Grocery	Santa Cruz	Air-Cooled	48
2007	SCE	Grocery	Malibu	Air-Cooled	46
2008	SCE	Grocery	Rancho Temecula	Air-Cooled	46

2010	SCE	Warehouse	Buena Park	Air-Cooled	41.3
2007	SCE	Warehouse	Santa Barbara	Air-Cooled	41.1
2007	SCE	Grocery	Torrance	Air-Cooled	40
2007	SCE	Grocery	Malibu	Air-Cooled	40

Figure 64: Air-cooled axial-fan halocarbon condenser database

Year	Utility	Project Type	Location	Configuration	Specific Efficiency
2007	SCE	Grocery	South El Monte	Centrifugal-Fan Evap	278
2008	SCE	Grocery	Buena Park	Centrifugal-Fan Evap	261
2008	SCE	Grocery	Pomona	Centrifugal-Fan Evap	240
2007	PG&E	Warehouse	Petaluma	Centrifugal-Fan Evap	234
2007	SCE	Warehouse	Ontario	Centrifugal-Fan Evap	226
2007	PG&E	Grocery	Paso Robles	Centrifugal-Fan Evap	214
2008	SCE	Grocery	Chino	Centrifugal-Fan Evap	193
2010	PG&E	Warehouse	Gonzales	Centrifugal-Fan Evap	192
2010	PG&E	Warehouse	Gonzales	Centrifugal-Fan Evap	192
2008	SCE	Grocery	Corona	Centrifugal-Fan Evap	191
2008	SCE	Grocery	Moreno Valley Frederick	Centrifugal-Fan Evap	191
2008	SCE	Grocery	Moreno Valley Heacock	Centrifugal-Fan Evap	191
2008	SCE	Grocery	Palm Springs	Centrifugal-Fan Evap	191
2008	SCE	Grocery	Pedley	Centrifugal-Fan Evap	191
2008	PG&E	Grocery	Bakersfield-Brimhall	Centrifugal-Fan Evap	191
2008	PG&E	Grocery	Bakersfield-Hageman	Centrifugal-Fan Evap	191
2008	PG&E	Grocery	Bakersfield-Olive	Centrifugal-Fan Evap	191
2008	PG&E	Grocery	Bakersfield-Planz	Centrifugal-Fan Evap	191
2008	PG&E	Grocery	Bakersfield-Stine	Centrifugal-Fan Evap	191
2008	PG&E	Grocery	Bakersfield-Stockdale	Centrifugal-Fan Evap	191
2008	PG&E	Grocery	Fresno-Tulare	Centrifugal-Fan Evap	191
2008	PG&E	Grocery	Lemoore	Centrifugal-Fan Evap	191
2008	PG&E	Grocery	Wasco	Centrifugal-Fan Evap	191
2008	SCE	Grocery	Alhambra	Centrifugal-Fan Evap	191
2008	SCE	Grocery	Baldwin Park	Centrifugal-Fan Evap	191
2008	SCE	Grocery	Loma Linda	Centrifugal-Fan Evap	191
2008	SCE	Grocery	Ontario-Euclid	Centrifugal-Fan Evap	191

2007	SCE	Grocery	Upland	Centrifugal-Fan Evap	191
2008	SCE	Grocery	Temecula	Centrifugal-Fan Evap	191
2008	SCE	Grocery	West Covina	Centrifugal-Fan Evap	191
2008	SCE	Grocery	Chino Hills	Centrifugal-Fan Evap	191
2008	SCE	Grocery	Covina	Centrifugal-Fan Evap	191
2008	SCE	Grocery	Fontana	Centrifugal-Fan Evap	191
2008	SCE	Grocery	Fountain Valley Harbor	Centrifugal-Fan Evap	191
2008	PG&E	Grocery	Fresno-1st St	Centrifugal-Fan Evap	191
2008	PG&E	Grocery	Fresno-Cedar	Centrifugal-Fan Evap	191
2008	SCE	Grocery	Compton	Centrifugal-Fan Evap	191
2008	SCE	Grocery	Delano	Centrifugal-Fan Evap	191
2008	SCE	Grocery	Fountain Valley 1082	Centrifugal-Fan Evap	191
2008	SCE	Grocery	Glendora	Centrifugal-Fan Evap	191
2008	SCE	Grocery	Hesperia	Centrifugal-Fan Evap	191
2008	SCE	Grocery	Long Beach	Centrifugal-Fan Evap	191
2008	SCE	Grocery	Moreno Valley Perris	Centrifugal-Fan Evap	191
2008	SCE	Grocery	Newbury Park	Centrifugal-Fan Evap	191
2008	SCE	Grocery	Norwalk	Centrifugal-Fan Evap	191
2008	SCE	Grocery	Oak Park	Centrifugal-Fan Evap	191
2008	SCE	Grocery	Palmdale	Centrifugal-Fan Evap	191
2008	SCE	Grocery	Paramount	Centrifugal-Fan Evap	191
2008	SCE	Grocery	Pico Rivera	Centrifugal-Fan Evap	191
2008	SCE	Grocery	Rialto	Centrifugal-Fan Evap	191
2008	SCE	Grocery	San Jacinto	Centrifugal-Fan Evap	191
2008	SCE	Grocery	Simi Valley	Centrifugal-Fan Evap	191
2008	SCE	Grocery	Upland	Centrifugal-Fan Evap	191
2008	SCE	Grocery	Yucaipa	Centrifugal-Fan Evap	191
2007	SCE	Grocery	Arcadia	Centrifugal-Fan Evap	191
2007	SCE	Grocery	Buena Park	Centrifugal-Fan Evap	191
2007	SCE	Grocery	Eagle Rock	Centrifugal-Fan Evap	191
2007	SCE	Grocery	Hemet	Centrifugal-Fan Evap	191
2007	SCE	Grocery	Huntington Beach	Centrifugal-Fan Evap	191
2007	SCE	Grocery	La Mirada	Centrifugal-Fan Evap	191
2007	SCE	Grocery	Laguna Hills	Centrifugal-Fan Evap	191
2007	SCE	Grocery	West Covina	Centrifugal-Fan Evap	191
2007	SCE	Grocery	Moreno Valley	Centrifugal-Fan Evap	189

2008	SCE	Grocery	Victorville	Centrifugal-Fan Evap	188
2007	SCE	Grocery	Visalia	Centrifugal-Fan Evap	188
2007	SCE	Grocery	Irvine	Centrifugal-Fan Evap	187
2007	SCE	Grocery	Victorville	Centrifugal-Fan Evap	186
2007	SCE	Grocery	Moreno Valley	Centrifugal-Fan Evap	186
2007	SCE	Grocery	Lake Forest	Centrifugal-Fan Evap	186
2008	SCE	Grocery	Anaheim Hills	Centrifugal-Fan Evap	175
2008	SCE	Grocery	Lakewood	Centrifugal-Fan Evap	175
2008	SCE	Grocery	City of Industry	Centrifugal-Fan Evap	175
2008	SCE	Grocery	La Habra	Centrifugal-Fan Evap	175
2008	SCE	Grocery	Moorpark	Centrifugal-Fan Evap	175
2008	SCE	Grocery	Moreno Valley Alessandro	Centrifugal-Fan Evap	175
2007	PG&E	Warehouse	Chico	Centrifugal-Fan Evap	175
2008	PG&E	Grocery	Manteca	Centrifugal-Fan Evap	173
2007	PG&E	Grocery	Woodland	Centrifugal-Fan Evap	173
2008	PG&E	Grocery	Madera	Centrifugal-Fan Evap	173
2008	SCE	Grocery	Duarte	Centrifugal-Fan Evap	172
2008	SCE	Grocery	Manhattan Beach	Centrifugal-Fan Evap	172
2008	SCE	Grocery	Palm Desert	Centrifugal-Fan Evap	172
2007	PG&E	Grocery	Martell	Centrifugal-Fan Evap	170
2007	PG&E	Grocery	Fresno	Centrifugal-Fan Evap	168
2007	PG&E	Grocery	San Francisco	Centrifugal-Fan Evap	168
2007	SCE	Grocery	Oxnard	Centrifugal-Fan Evap	155
2008	SCE	Grocery	Victorville	Centrifugal-Fan Evap	155

Figure 65: Centrifugal fan evaporative-cooled halocarbon condenser database

13. Appendix H: Energy Analysis for CO_2 Secondary Systems

Appendix H describes the energy impact analysis performed for the CO_2 secondary (indirect) cooling measure. Indirect (pump-recirculated) systems were evaluated for both small and large supermarkets, consistent with stakeholder comments about the predominance of this configuration versus cascade cooling systems. The indirect system configuration for both the small and large supermarket prototypes consist of phase-change CO_2 pump-recirculated loops serving both the low- and medium-temperature loads—both served by dedicated LT and MT R-404A suction groups, respectively. The baselines of comparison are central rack systems with air-cooled condensers. The Baselines include floating head pressure to 70°F SCT with ambient-following control logic and variable-speed condenser fans, as well as floating suction pressure control. Figure 66 shows the general system configuration:

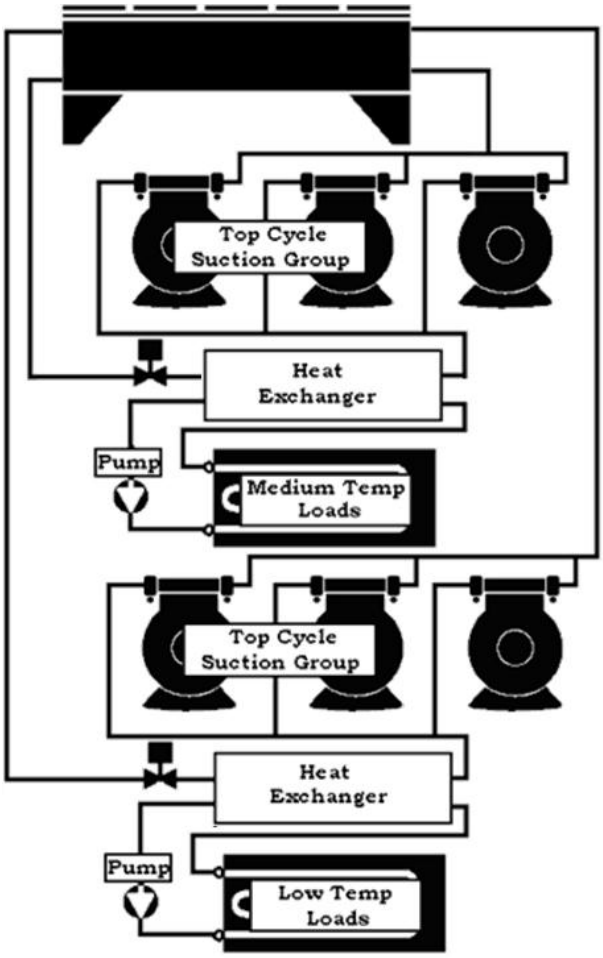

Figure 66: Indirect system diagram

The analysis took into account the lower return gas temperature at the compressors (increased pumping efficiency) and the circulation loop heat gains, which constitute a pure heat load on the system in contrast to suction line heat gain on direct expansion (DX) systems, which only act to increase superheat and decrease pumping efficiency. Operating suction temperatures for the CO_2 indirect system were assumed to be similar to the baseline design, with a slight increase for CO_2—consistent with stakeholder feedback that the comparatively better refrigeration efficiency of CO_2

outweights the penalty of requiring a TD in the CO_2/refrigerant heat exchanger. Figure 67 shows the analysis assumptions for this measure.

	Large Supermarket	Small Supermarket
Design climate	CTZ12 – Sacramento Executive	CTZ12 – Sacramento Executive
Design temperatures	LT System: -20°F SST, 117°F SCT MT System: 18°F SST, 122°F SCT	LT System: -25°F SST, 117°F SCT MT System: 21°F SST, 122°F SCT
Condenser	Air-cooled	Air-cooled
Condenser design TD	LT: 10°F MT: 15°F	LT: 10°F MT: 15°F
Condenser specific efficiency	50 (Btu/h)/W	50 (Btu/h)/W
Condenser capacity at design conditions	LT: 673 MBH MT: 1,710 MBH	LT: 92 MBH MT: 354 MBH
Condenser control	Floating head pressure, drybulb-following control logic with variable-speed fans	Floating head pressure, drybulb-following control logic with variable-speed fans
Minimum condensing temperature	70°F	70°F
Compressors	(3) uneven reciprocating semi-hermetic compressors per suction group Performance at design conditions: MT Compressor 1: 4,493 lb/hr, 27.2 kW MTCompressor 2: 10,483 lb/hr, 63.5 kW MT Compressor 3: 14,976 lb/hr, 90.6 kW LT Compressor 1: 1,422 lb/hr, 14.7 kW LT Compressor 2: 3,318 lb/hr, 34.4 kW LT Compressor 3: 4,740 lb/hr, 49.2 kW	(3) uneven reciprocating semi-hermetic compressors per suction group Performance at design conditions: MT Compressor 1: 1,364 lb/hr, 7.6 kW MTCompressor 2: 3,183 lb/hr, 17.6 kW MT Compressor 3: 4,546 lb/hr, 25.2 kW LT Compressor 1: 402 lb/hr, 4.5 kW LT Compressor 2: 939 lb/hr, 10.4 kW LT Compressor 3: 1,341 lb/hr, 14.8 kW
Compressor control	Electronic sequencing with floating suction pressure	Electronic sequencing with floating suction pressure
Assumed compressor return gas temperature	LT: -5°F MT: 28°F	LT: -5°F MT: 28°F
Pump power	LT: 1.0 HP MT: 4.0 HP	LT: 0.33 HP MT: 1.25 HP
Assumed piping heat gain	LT: 40.0 MBH MT: 22.8 MBH	LT: 11.1 MBH MT: 7.4 MBH

Figure 67: Analysis assumptions for CO_2 indirect system analysis

13.1 Analysis Results

Figure 68 below shows the analysis results for this measure.

	Baseline Energy	Proposed Energy	Difference (kWh)

	Usage (kWh)		**Usage (kWh)**			
	LT	MT	LT	MT	LT	MT
Large Supermarket						
Compressors	247,579	421,483	239,471	411,448	-8,108	-10,035
Condenser	11,846	32,841	11,784	32,643	-62	-198
Pumps	0		36,266		36,266	
Total (Whole Building)	2,221,967		2,203,564		-18,403	
Small Supermarket						
Compressors	70,304	88,164	83,124	87,973	12,820	-191
Condenser	3,187	7,122	3,955	7,680	768	558
Pumps	0		11,472		11,472	
Total (Whole Building)	626,019		654,898		28,879	

Figure 68: Energy analysis results for CO_2 indirect system measure

The overall difference in energy consumption ranges from approximately -1% to +5%. As stated before, the analysis includes assumptions for SST impact, compressor return gas temperature changes, and piping heat gain, all of which can vary widely from store to store. Due to these considerations, the energy impact for indirect systems is assumed to be negligible.

14. Appendix I: Stakeholder List and Description of Feedback

15. Appendix J: Full Cost Results

15.1 Floating Head Pressure

CTZ01 Arcata - Floating Head Pressure

	Energy Savings (kWh)	Energy Savings/ SF (kWh)	TDV Cost Savings ($)	TDV Cost Savings /SF ($)	Measure Cost ($)	Benefit/ Cost Ratio
SAC	39,781	2.51	$ 75,523	$ 4.77	$ 15,248	4.95
SAD	42,136	2.66	$ 80,551	$ 5.08	$ 15,248	5.28
SEC	15,661	0.99	$ 26,299	$ 1.66	$ 13,040	2.02
SFC	22,345	1.41	$ 37,646	$ 2.38	$ 13,040	2.89
SFD	26,678	1.68	$ 44,854	$ 2.83	$ 13,040	3.44
MAC	151,127	2.54	$ 283,312	$ 4.76	$ 39,433	7.18
MAD	160,345	2.69	$ 302,224	$ 5.07	$ 39,433	7.66
MEC	49,416	0.83	$ 87,626	$ 1.47	$ 32,463	2.70
MFC	72,745	1.22	$ 124,373	$ 2.09	$ 32,463	3.83
MFD	90,908	1.53	$ 153,964	$ 2.59	$ 32,463	4.74
LAC	183,796	1.13	$ 350,950	$ 2.16	$ 44,484	7.89
LAD	170,940	1.05	$ 330,374	$ 2.04	$ 44,484	7.43
LEC	101,828	0.63	$ 173,642	$ 1.07	$ 36,071	4.81
LFC	117,735	0.73	$ 193,052	$ 1.19	$ 36,071	5.35
LFD	132,623	0.82	$ 217,526	$ 1.34	$ 36,071	6.03
SXX Average	29,320	1.85	$ 52,974	$ 3.34	$ 13,923	3.80
MXX Average	104,908	1.76	$ 190,300	$ 3.20	$ 35,251	5.40
LXX Average	141,384	0.87	$ 253,109	$ 1.56	$ 39,436	6.42
XAX Average	124,688	2.10	$ 237,156	$ 3.98	$ 33,055	7.17
XEX Average	55,635	0.82	$ 95,855	$ 1.40	$ 27,191	3.53
XFX Average	77,172	1.23	$ 128,569	$ 2.07	$ 27,191	4.73
ALL Average	91,871	1.49	$ 165,461	$ 2.70	$ 29,537	5.60

CTZ03 Oakland - Floating Head Pressure

	Energy Savings (kWh)	Energy Savings/ SF (kWh)	TDV Cost Savings ($)	TDV Cost Savings /SF ($)	Measure Cost ($)	Benefit/ Cost Ratio
SAC	40,637	2.56	$ 78,193	$ 4.93	$ 15,248	5.13
SAD	43,911	2.77	$ 84,218	$ 5.31	$ 15,248	5.52
SEC	12,751	0.80	$ 23,940	$ 1.51	$ 13,040	1.84
SFC	15,780	1.00	$ 25,595	$ 1.61	$ 13,040	1.96
SFD	18,644	1.18	$ 29,618	$ 1.87	$ 13,040	2.27
MAC	150,533	2.53	$ 279,833	$ 4.70	$ 39,433	7.10
MAD	161,340	2.71	$ 298,664	$ 5.01	$ 39,433	7.57
MEC	42,004	0.71	$ 84,360	$ 1.42	$ 32,463	2.60
MFC	54,231	0.91	$ 90,973	$ 1.53	$ 32,463	2.80
MFD	65,078	1.09	$ 104,838	$ 1.76	$ 32,463	3.23
LAC	188,761	1.16	$ 369,888	$ 2.28	$ 44,484	8.32
LAD	180,791	1.12	$ 355,329	$ 2.19	$ 44,484	7.99
LEC	84,424	0.52	$ 146,017	$ 0.90	$ 36,071	4.05
LFC	79,441	0.49	$ 121,748	$ 0.75	$ 36,071	3.38
LFD	89,767	0.55	$ 134,892	$ 0.83	$ 36,071	3.74
SXX Average	26,345	1.66	$ 48,313	$ 3.05	$ 13,923	3.47
MXX Average	94,637	1.59	$ 171,734	$ 2.88	$ 35,251	4.87

DRAFT

LXX Average	124,637	0.77	$ 225,575	$ 1.39	$ 39,436	5.72
XAX Average	127,662	2.14	$ 244,354	$ 4.07	$ 33,055	7.39
XEX Average	46,393	0.68	$ 84,772	$ 1.28	$ 27,191	3.12
XFX Average	53,824	0.87	$ 84,611	$ 1.39	$ 27,191	3.11
ALL Average	81,873	1.34	$ 148,540	$ 2.44	$ 29,537	5.03

CTZ05 Santa Maria - Floating Head Pressure						
	Energy Savings (kWh)	Energy Savings/ SF (kWh)	TDV Cost Savings ($)	TDV Cost Savings /SF ($)	Measure Cost ($)	Benefit/ Cost Ratio
SAC	40,394	2.55	$ 78,976	$ 4.98	$ 15,248	5.18
SAD	43,382	2.74	$ 85,054	$ 5.37	$ 15,248	5.58
SEC	13,577	0.86	$ 24,341	$ 1.54	$ 13,040	1.87
SFC	17,854	1.13	$ 28,790	$ 1.82	$ 13,040	2.21
SFD	21,088	1.33	$ 33,489	$ 2.11	$ 13,040	2.57
MAC	149,843	2.52	$ 283,846	$ 4.77	$ 39,433	7.20
MAD	159,853	2.68	$ 302,082	$ 5.07	$ 39,433	7.66
MEC	45,094	0.76	$ 86,772	$ 1.46	$ 32,463	2.67
MFC	60,606	1.02	$ 101,145	$ 1.70	$ 32,463	3.12
MFD	73,413	1.23	$ 118,446	$ 1.99	$ 32,463	3.65
LAC	186,891	1.15	$ 369,274	$ 2.28	$ 44,484	8.30
LAD	177,073	1.09	$ 352,409	$ 2.17	$ 44,484	7.92
LEC	87,840	0.54	$ 148,206	$ 0.91	$ 36,071	4.11
LFC	90,733	0.56	$ 140,036	$ 0.86	$ 36,071	3.88
LFD	101,991	0.63	$ 155,646	$ 0.96	$ 36,071	4.32
SXX Average	27,259	1.72	$ 50,130	$ 3.16	$ 13,923	3.60
MXX Average	97,762	1.64	$ 178,458	$ 3.00	$ 35,251	5.06
LXX Average	128,906	0.80	$ 233,115	$ 1.44	$ 39,436	5.91
XAX Average	126,239	2.12	$ 245,274	$ 4.11	$ 33,055	7.42
XEX Average	48,837	0.72	$ 86,440	$ 1.30	$ 27,191	3.18
XFX Average	60,948	0.98	$ 96,259	$ 1.57	$ 27,191	3.54
ALL Average	84,642	1.39	$ 153,901	$ 2.53	$ 29,537	5.21

CTZ07 San Diego-Lindbergh - Floating Head Pressure						
	Energy Savings (kWh)	Energy Savings/ SF (kWh)	TDV Cost Savings ($)	TDV Cost Savings /SF ($)	Measure Cost ($)	Benefit/ Cost Ratio
SAC	41,339	2.61	$ 81,521	$ 5.14	$ 15,248	5.35
SAD	45,200	2.85	$ 88,454	$ 5.58	$ 15,248	5.80
SEC	11,692	0.74	$ 24,732	$ 1.56	$ 13,040	1.90
SFC	8,302	0.52	$ 14,257	$ 0.90	$ 13,040	1.09
SFD	8,739	0.55	$ 14,266	$ 0.90	$ 13,040	1.09
MAC	146,560	2.46	$ 279,379	$ 4.69	$ 39,433	7.08
MAD	158,757	2.67	$ 300,079	$ 5.04	$ 39,433	7.61
MEC	43,208	0.73	$ 88,347	$ 1.48	$ 32,463	2.72
MFC	33,276	0.56	$ 56,362	$ 0.95	$ 32,463	1.74
MFD	33,911	0.57	$ 55,837	$ 0.94	$ 32,463	1.72
LAC	189,170	1.17	$ 378,441	$ 2.33	$ 44,484	8.51
LAD	186,284	1.15	$ 369,719	$ 2.28	$ 44,484	8.31
LEC	62,714	0.39	$ 123,474	$ 0.76	$ 36,071	3.42
LFC	29,578	0.18	$ 46,759	$ 0.29	$ 36,071	1.30
LFD	30,742	0.19	$ 43,306	$ 0.27	$ 36,071	1.20
SXX Average	23,054	1.45	$ 44,646	$ 2.82	$ 13,923	3.21
MXX Average	83,142	1.40	$ 156,001	$ 2.62	$ 35,251	4.43
LXX Average	99,698	0.61	$ 192,340	$ 1.19	$ 39,436	4.88
XAX Average	127,885	2.15	$ 249,599	$ 4.18	$ 33,055	7.55

XEX Average	39,205	0.62	$ 78,851	$ 1.27	$ 27,191	2.90
XFX Average	24,091	0.43	$ 38,464	$ 0.71	$ 27,191	1.41
ALL Average	68,631	1.16	$ 130,996	$ 2.21	$ 29,537	4.43

CTZ08 Fullerton - Floating Head Pressure						
	Energy Savings (kWh)	Energy Savings/ SF (kWh)	TDV Cost Savings ($)	TDV Cost Savings /SF ($)	Measure Cost ($)	Benefit/ Cost Ratio
SAC	38,527	2.43	$ 140,286	$ 8.85	$ 15,248	9.20
SAD	46,054	2.91	$ 158,156	$ 9.98	$ 15,248	10.37
SEC	6,039	0.38	$ 74,214	$ 4.68	$ 13,040	5.69
SFC	16,053	1.01	$ 26,503	$ 1.67	$ 13,040	2.03
SFD	18,268	1.15	$ 29,494	$ 1.86	$ 13,040	2.26
MAC	155,455	2.61	$ 271,600	$ 4.56	$ 39,433	6.89
MAD	169,481	2.85	$ 301,138	$ 5.06	$ 39,433	7.64
MEC	50,026	0.84	$ 100,086	$ 1.68	$ 32,463	3.08
MFC	40,973	0.69	$ 66,756	$ 1.12	$ 32,463	2.06
MFD	44,953	0.75	$ 72,443	$ 1.22	$ 32,463	2.23
LAC	191,996	1.18	$ 357,687	$ 2.21	$ 44,484	8.04
LAD	204,068	1.26	$ 392,707	$ 2.42	$ 44,484	8.83
LEC	72,521	0.45	$ 139,627	$ 0.86	$ 36,071	3.87
LFC	39,502	0.24	$ 61,915	$ 0.38	$ 36,071	1.72
LFD	42,232	0.26	$ 61,986	$ 0.38	$ 36,071	1.72
SXX Average	24,988	1.58	$ 85,731	$ 5.41	$ 13,923	6.16
MXX Average	92,178	1.55	$ 162,405	$ 2.73	$ 35,251	4.61
LXX Average	110,064	0.68	$ 202,785	$ 1.25	$ 39,436	5.14
XAX Average	134,264	2.21	$ 270,262	$ 5.51	$ 33,055	8.18
XEX Average	42,862	0.56	$ 104,642	$ 2.41	$ 27,191	3.85
XFX Average	33,664	0.69	$ 53,183	$ 1.11	$ 27,191	1.96
ALL Average	75,743	1.27	$ 150,307	$ 3.13	$ 29,537	5.09

CTZ10 Riverside - Floating Head Pressure						
	Energy Savings (kWh)	Energy Savings/ SF (kWh)	TDV Cost Savings ($)	TDV Cost Savings /SF ($)	Measure Cost ($)	Benefit/ Cost Ratio
SAC	39,532	2.49	$ 63,926	$ 4.03	$ 15,248	4.19
SAD	44,875	2.83	$ 72,728	$ 4.59	$ 15,248	4.77
SEC	14,918	0.94	$ 30,223	$ 1.91	$ 13,040	2.32
SFC	13,572	0.86	$ 21,991	$ 1.39	$ 13,040	1.69
SFD	15,008	0.95	$ 23,584	$ 1.49	$ 13,040	1.81
MAC	144,706	2.43	$ 230,795	$ 3.88	$ 39,433	5.85
MAD	158,128	2.66	$ 253,561	$ 4.26	$ 39,433	6.43
MEC	54,139	0.91	$ 107,615	$ 1.81	$ 32,463	3.31
MFC	52,888	0.89	$ 83,532	$ 1.40	$ 32,463	2.57
MFD	60,377	1.01	$ 94,363	$ 1.58	$ 32,463	2.91
LAC	183,117	1.13	$ 298,940	$ 1.84	$ 44,484	6.72
LAD	195,975	1.21	$ 325,799	$ 2.01	$ 44,484	7.32
LEC	83,758	0.52	$ 161,102	$ 0.99	$ 36,071	4.47
LFC	64,454	0.40	$ 102,791	$ 0.63	$ 36,071	2.85
LFD	69,876	0.43	$ 107,063	$ 0.66	$ 36,071	2.97
SXX Average	25,581	1.61	$ 42,491	$ 2.68	$ 13,923	3.05
MXX Average	94,048	1.58	$ 153,973	$ 2.59	$ 35,251	4.37
LXX Average	119,436	0.74	$ 199,139	$ 1.23	$ 39,436	5.05
XAX Average	127,722	2.12	$ 207,625	$ 3.43	$ 33,055	6.28
XEX Average	50,938	0.79	$ 99,647	$ 1.57	$ 27,191	3.66

XFX Average	46,029	0.76	$ 72,221	$ 1.19	$ 27,191	2.66
ALL Average	79,688	1.31	$ 131,868	$ 2.16	$ 29,537	4.46

CTZ12 Sacramento - Floating Head Pressure						
	Energy Savings (kWh)	Energy Savings/ SF (kWh)	TDV Cost Savings ($)	TDV Cost Savings /SF ($)	Measure Cost ($)	Benefit/ Cost Ratio
SAC	39,315	2.48	$ 64,514	$ 4.07	$ 15,248	4.23
SAD	44,092	2.78	$ 72,657	$ 4.58	$ 15,248	4.77
SEC	15,774	1.00	$ 31,665	$ 2.00	$ 13,040	2.43
SFC	16,053	1.01	$ 26,503	$ 1.67	$ 13,040	2.03
SFD	18,268	1.15	$ 29,494	$ 1.86	$ 13,040	2.26
MAC	146,124	2.45	$ 237,461	$ 3.99	$ 39,433	6.02
MAD	158,145	2.66	$ 258,073	$ 4.33	$ 39,433	6.54
MEC	54,644	0.92	$ 110,454	$ 1.85	$ 32,463	3.40
MFC	59,837	1.00	$ 97,327	$ 1.63	$ 32,463	3.00
MFD	70,005	1.18	$ 112,421	$ 1.89	$ 32,463	3.46
LAC	183,217	1.13	$ 303,354	$ 1.87	$ 44,484	6.82
LAD	190,289	1.17	$ 319,819	$ 1.97	$ 44,484	7.19
LEC	91,373	0.56	$ 173,748	$ 1.07	$ 36,071	4.82
LFC	79,733	0.49	$ 126,963	$ 0.78	$ 36,071	3.52
LFD	87,509	0.54	$ 134,910	$ 0.83	$ 36,071	3.74
SXX Average	26,700	1.68	$ 44,967	$ 2.84	$ 13,923	3.23
MXX Average	97,751	1.64	$ 163,147	$ 2.74	$ 35,251	4.63
LXX Average	126,424	0.78	$ 211,759	$ 1.31	$ 39,436	5.37
XAX Average	126,864	2.11	$ 209,313	$ 3.47	$ 33,055	6.33
XEX Average	53,930	0.83	$ 105,289	$ 1.64	$ 27,191	3.87
XFX Average	55,234	0.90	$ 87,936	$ 1.45	$ 27,191	3.23
ALL Average	83,625	1.37	$ 139,958	$ 2.29	$ 29,537	4.74

CTZ13 Fresno - Floating Head Pressure						
	Energy Savings (kWh)	Energy Savings/ SF (kWh)	TDV Cost Savings ($)	TDV Cost Savings /SF ($)	Measure Cost ($)	Benefit/ Cost Ratio
SAC	38,192	2.41	$ 61,452	$ 3.88	$ 15,248	4.03
SAD	43,127	2.72	$ 69,391	$ 4.38	$ 15,248	4.55
SEC	15,979	1.01	$ 32,439	$ 2.05	$ 13,040	2.49
SFC	14,963	0.94	$ 25,159	$ 1.59	$ 13,040	1.93
SFD	16,630	1.05	$ 27,358	$ 1.73	$ 13,040	2.10
MAC	139,461	2.34	$ 223,418	$ 3.75	$ 39,433	5.67
MAD	151,764	2.55	$ 243,335	$ 4.09	$ 39,433	6.17
MEC	58,396	0.98	$ 115,482	$ 1.94	$ 32,463	3.56
MFC	56,223	0.94	$ 91,151	$ 1.53	$ 32,463	2.81
MFD	64,878	1.09	$ 104,696	$ 1.76	$ 32,463	3.23
LAC	175,986	1.09	$ 285,164	$ 1.76	$ 44,484	6.41
LAD	189,627	1.17	$ 307,911	$ 1.90	$ 44,484	6.92
LEC	88,153	0.54	$ 171,871	$ 1.06	$ 36,071	4.76
LFC	72,617	0.45	$ 120,333	$ 0.74	$ 36,071	3.34
LFD	78,505	0.48	$ 125,628	$ 0.77	$ 36,071	3.48
SXX Average	25,778	1.63	$ 43,160	$ 2.72	$ 13,923	3.10
MXX Average	94,144	1.58	$ 155,616	$ 2.61	$ 35,251	4.41
LXX Average	120,978	0.75	$ 202,181	$ 1.25	$ 39,436	5.13
XAX Average	123,026	2.05	$ 198,445	$ 3.29	$ 33,055	6.00
XEX Average	54,176	0.84	$ 106,597	$ 1.68	$ 27,191	3.92

XFX Average	50,636	0.83	$ 82,387	$ 1.35	$ 27,191	3.03
ALL Average	80,300	1.32	$ 133,652	$ 2.19	$ 29,537	4.52

CTZ14 Palmdale - Floating Head Pressure						
	Energy Savings (kWh)	Energy Savings/ SF (kWh)	TDV Cost Savings ($)	TDV Cost Savings /SF ($)	Measure Cost ($)	Benefit/ Cost Ratio
SAC	36,364	2.29	$ 57,955	$ 3.66	$ 15,248	3.80
SAD	41,444	2.61	$ 66,160	$ 4.17	$ 15,248	4.34
SEC	17,764	1.12	$ 33,276	$ 2.10	$ 13,040	2.55
SFC	22,121	1.40	$ 35,011	$ 2.21	$ 13,040	2.68
SFD	25,252	1.59	$ 39,265	$ 2.48	$ 13,040	3.01
MAC	134,446	2.26	$ 212,596	$ 3.57	$ 39,433	5.39
MAD	147,212	2.47	$ 233,430	$ 3.92	$ 39,433	5.92
MEC	63,563	1.07	$ 122,184	$ 2.05	$ 32,463	3.76
MFC	80,608	1.35	$ 128,672	$ 2.16	$ 32,463	3.96
MFD	94,174	1.58	$ 147,557	$ 2.48	$ 32,463	4.55
LAC	171,801	1.06	$ 275,765	$ 1.70	$ 44,484	6.20
LAD	186,133	1.15	$ 302,171	$ 1.86	$ 44,484	6.79
LEC	99,380	0.61	$ 178,510	$ 1.10	$ 36,071	4.95
LFC	115,817	0.71	$ 179,044	$ 1.10	$ 36,071	4.96
LFD	125,481	0.77	$ 189,572	$ 1.17	$ 36,071	5.26
SXX Average	28,589	1.80	$ 46,334	$ 2.92	$ 13,923	3.33
MXX Average	104,001	1.75	$ 168,887	$ 2.84	$ 35,251	4.79
LXX Average	139,722	0.86	$ 225,012	$ 1.39	$ 39,436	5.71
XAX Average	119,567	1.97	$ 191,346	$ 3.15	$ 33,055	5.79
XEX Average	60,236	0.93	$ 111,323	$ 1.75	$ 27,191	4.09
XFX Average	77,242	1.24	$ 119,853	$ 1.93	$ 27,191	4.41
ALL Average	90,771	1.47	$ 146,744	$ 2.38	$ 29,537	4.97

CTZ15 Palm Springs - Floating Head Pressure						
	Energy Savings (kWh)	Energy Savings/ SF (kWh)	TDV Cost Savings ($)	TDV Cost Savings /SF ($)	Measure Cost ($)	Benefit/ Cost Ratio
SAC	32,567	2.05	$ 50,604	$ 3.19	$ 15,248	3.32
SAD	38,403	2.42	$ 59,628	$ 3.76	$ 15,248	3.91
SEC	16,456	1.04	$ 33,045	$ 2.08	$ 13,040	2.53
SFC	11,572	0.73	$ 19,303	$ 1.22	$ 13,040	1.48
SFD	12,384	0.78	$ 20,318	$ 1.28	$ 13,040	1.56
MAC	114,327	1.92	$ 177,700	$ 2.98	$ 39,433	4.51
MAD	130,137	2.19	$ 201,987	$ 3.39	$ 39,433	5.12
MEC	57,367	0.96	$ 109,377	$ 1.84	$ 32,463	3.37
MFC	44,760	0.75	$ 70,833	$ 1.19	$ 32,463	2.18
MFD	50,255	0.84	$ 79,581	$ 1.34	$ 32,463	2.45
LAC	153,344	0.95	$ 239,633	$ 1.48	$ 44,484	5.39
LAD	181,873	1.12	$ 282,885	$ 1.74	$ 44,484	6.36
LEC	86,487	0.53	$ 168,658	$ 1.04	$ 36,071	4.68
LFC	56,150	0.35	$ 93,758	$ 0.58	$ 36,071	2.60
LFD	59,380	0.37	$ 97,745	$ 0.60	$ 36,071	2.71
SXX Average	22,276	1.41	$ 36,579	$ 2.31	$ 13,923	2.63
MXX Average	79,369	1.33	$ 127,896	$ 2.15	$ 35,251	3.63
LXX Average	107,447	0.66	$ 176,536	$ 1.09	$ 39,436	4.48
XAX Average	108,442	1.78	$ 168,739	$ 2.76	$ 33,055	5.10
XEX Average	53,437	0.84	$ 103,693	$ 1.65	$ 27,191	3.81

XFX Average	39,084	0.64	$ 63,590	$ 1.03	$ 27,191	2.34
ALL Average	69,697	1.13	$ 113,670	$ 1.85	$ 29,537	3.85

15.2 Condenser Specific Efficiency

CTZ01 Arcata - Condenser Specific Efficiency						
	Energy Savings (kWh)	Energy Savings/ SF (kWh)	TDV Cost Savings ($)	TDV Cost Savings /SF ($)	Measure Cost ($)	Benefit/ Cost Ratio
SAC-EC	579	0.04	$1,299	$0.08	$1,731	0.75
SAC-Non-EC	579	0.04	$1,299	$0.08	$1,099	1.18
SAD-EC	431	0.03	$979	$0.06	$1,738	0.56
SAD-Non-EC	431	0.03	$979	$0.06	$1,103	0.89
SEC	633	0.04	$1,255	$0.08	$81	15.43
MAC-EC	2,467	0.04	$5,829	$0.10	$5,597	1.04
MAC-Non-EC	2,467	0.04	$5,829	$0.10	$3,554	1.64
MAD-EC	2,083	0.03	$4,779	$0.08	$5,668	0.84
MAD-Non-EC	2,083	0.03	$4,779	$0.08	$3,599	1.33
MEC	2,781	0.05	$5,491	$0.09	$261	21.04
LAC-EC	1,897	0.01	$4,414	$0.03	$8,724	0.51
LAC-Non-EC	1,897	0.01	$4,414	$0.03	$5,540	0.80
LAD-EC	1,334	0.01	$2,857	$0.02	$8,876	0.32
LAD-Non-EC	1,334	0.01	$2,857	$0.02	$5,636	0.51
LEC	1,603	0.01	$3,239	$0.02	$362	8.94
SXX Average	531	0.03	$1,162	$0.07	$1,150	3.76
MXX Average	2,376	0.04	$5,342	$0.09	$3,736	5.18
LXX Average	1,613	0.01	$3,556	$0.02	$5,828	2.22
XAX Average	1,465	0.03	$3,360	$0.06	$5,389	0.67
XEX Average	1,672	0.03	$3,328	$0.06	$235	15.14
ALL Average	1,507	0.03	$3,353	$0.06	$3,571	3.72

CTZ03 Oakland - Condenser Specific Efficiency						
	Energy Savings (kWh)	Energy Savings/ SF (kWh)	TDV Cost Savings ($)	TDV Cost Savings /SF ($)	Measure Cost ($)	Benefit/ Cost Ratio
SAC-EC	906	0.06	$2,332	$0.15	$1,731	1.35
SAC-Non-EC	906	0.06	$2,332	$0.15	$1,099	2.12
SAD-EC	667	0.04	$1,887	$0.12	$1,738	1.09
SAD-Non-EC	667	0.04	$1,887	$0.12	$1,103	1.71
SEC	646	0.04	$1,237	$0.08	$81	15.21
MAC-EC	4,015	0.07	$10,386	$0.17	$5,597	1.86
MAC-Non-EC	4,015	0.07	$10,386	$0.17	$3,554	2.92
MAD-EC	3,241	0.05	$8,891	$0.15	$5,668	1.57
MAD-Non-EC	3,241	0.05	$8,891	$0.15	$3,599	2.47
MEC	2,856	0.05	$5,482	$0.09	$261	21.00
LAC-EC	3,092	0.02	$7,965	$0.05	$8,724	0.91
LAC-Non-EC	3,092	0.02	$7,965	$0.05	$5,540	1.44
LAD-EC	1,828	0.01	$4,993	$0.03	$8,876	0.56
LAD-Non-EC	1,828	0.01	$4,993	$0.03	$5,636	0.89
LEC	1,718	0.01	$3,373	$0.02	$362	9.31
SXX Average	758	0.05	$1,935	$0.12	$1,150	4.30
MXX Average	3,474	0.06	$8,807	$0.15	$3,736	5.96
LXX Average	2,312	0.01	$5,858	$0.04	$5,828	2.62

XAX Average	2,292	0.04	$6,076	$0.11	$5,389	1.22
XEX Average	1,740	0.03	$3,364	$0.06	$235	15.18
ALL Average	2,181	0.04	$5,533	$0.10	$3,571	4.29

CTZ05 Santa Maria - Condenser Specific Efficiency						
	Energy Savings (kWh)	Energy Savings/ SF (kWh)	TDV Cost Savings ($)	TDV Cost Savings /SF ($)	Measure Cost ($)	Benefit/ Cost Ratio
SAC-EC	828	0.05	$1,851	$0.12	$1,731	1.07
SAC-Non-EC	828	0.05	$1,851	$0.12	$1,099	1.68
SAD-EC	618	0.04	$1,433	$0.09	$1,738	0.82
SAD-Non-EC	618	0.04	$1,433	$0.09	$1,103	1.30
SEC	635	0.04	$1,228	$0.08	$81	15.10
MAC-EC	3,671	0.06	$8,561	$0.14	$5,597	1.53
MAC-Non-EC	3,671	0.06	$8,561	$0.14	$3,554	2.41
MAD-EC	2,996	0.05	$7,129	$0.12	$5,668	1.26
MAD-Non-EC	2,996	0.05	$7,129	$0.12	$3,599	1.98
MEC	2,804	0.05	$5,420	$0.09	$261	20.77
LAC-EC	2,848	0.02	$6,354	$0.04	$8,724	0.73
LAC-Non-EC	2,848	0.02	$6,354	$0.04	$5,540	1.15
LAD-EC	4,759	0.03	$3,943	$0.02	$8,876	0.44
LAD-Non-EC	4,759	0.03	$3,943	$0.02	$5,636	0.70
LEC	1,686	0.01	$3,346	$0.02	$362	9.24
SXX Average	705	0.04	$1,559	$0.10	$1,150	4.00
MXX Average	3,228	0.05	$7,360	$0.12	$3,736	5.59
LXX Average	3,380	0.02	$4,788	$0.03	$5,828	2.45
XAX Average	2,620	0.04	$4,879	$0.09	$5,389	0.98
XEX Average	1,708	0.03	$3,331	$0.06	$235	15.04
ALL Average	2,438	0.04	$4,569	$0.08	$3,571	4.01

CTZ07 San Diego-Lindbergh - Condenser Specific Efficiency						
	Energy Savings (kWh)	Energy Savings/ SF (kWh)	TDV Cost Savings ($)	TDV Cost Savings /SF ($)	Measure Cost ($)	Benefit/ Cost Ratio
SAC-EC	1,250	0.08	$2,759	$0.17	$1,731	1.59
SAC-Non-EC	1,250	0.08	$2,759	$0.17	$1,099	2.51
SAD-EC	939	0.06	$2,180	$0.14	$1,738	1.25
SAD-Non-EC	939	0.06	$2,180	$0.14	$1,103	1.98
SEC	647	0.04	$1,264	$0.08	$81	15.54
MAC-EC	5,859	0.10	$13,109	$0.22	$5,597	2.34
MAC-Non-EC	5,859	0.10	$13,109	$0.22	$3,554	3.69
MAD-EC	4,616	0.08	$10,813	$0.18	$5,668	1.91
MAD-Non-EC	4,616	0.08	$10,813	$0.18	$3,599	3.00
MEC	2,892	0.05	$5,678	$0.10	$261	21.75
LAC-EC	4,385	0.03	$9,692	$0.06	$8,724	1.11
LAC-Non-EC	4,385	0.03	$9,692	$0.06	$5,540	1.75
LAD-EC	2,329	0.01	$5,616	$0.03	$8,876	0.63
LAD-Non-EC	2,329	0.01	$5,616	$0.03	$5,636	1.00
LEC	1,767	0.01	$3,515	$0.02	$362	9.71
SXX Average	1,005	0.06	$2,228	$0.14	$1,150	4.58
MXX Average	4,768	0.08	$10,705	$0.18	$3,736	6.54
LXX Average	3,039	0.02	$6,826	$0.04	$5,828	2.84
XAX Average	3,230	0.06	$7,362	$0.13	$5,389	1.47
XEX Average	1,769	0.03	$3,486	$0.07	$235	15.67
ALL Average	2,937	0.05	$6,586	$0.12	$3,571	4.65

CTZ08 Fullerton - Condenser Specific Efficiency						
	Energy Savings (kWh)	Energy Savings/ SF (kWh)	TDV Cost Savings ($)	TDV Cost Savings /SF ($)	Measure Cost ($)	Benefit/ Cost Ratio
SAC-EC	1,428	0.09	$4,548	$0.29	$1,853	2.45
SAC-Non-EC	1,428	0.09	$4,548	$0.29	$1,177	3.87
SAD-EC	1,034	0.07	$3,827	$0.24	$1,906	2.01
SAD-Non-EC	1,034	0.07	$3,827	$0.24	$1,210	3.16
SEC	504	0.03	$961	$0.06	$79	12.19
MAC-EC	5,962	0.10	$18,253	$0.31	$6,050	3.02
MAC-Non-EC	5,962	0.10	$18,253	$0.31	$3,841	4.75
MAD-EC	4,691	0.08	$15,966	$0.27	$6,228	2.56
MAD-Non-EC	4,691	0.08	$15,966	$0.27	$3,955	4.04
MEC	3,453	0.06	$6,621	$0.11	$277	23.90
LAC-EC	5,876	0.04	$18,734	$0.12	$9,459	1.98
LAC-Non-EC	5,876	0.04	$18,734	$0.12	$6,006	3.12
LAD-EC	2,815	0.02	$12,006	$0.07	$9,862	1.22
LAD-Non-EC	2,815	0.02	$12,006	$0.07	$6,262	1.92
LEC	1,457	0.01	$2,830	$0.02	$352	8.03
SXX Average	1,086	0.07	$3,542	$0.22	$1,245	4.74
MXX Average	4,952	0.08	$15,012	$0.25	$4,070	7.65
LXX Average	3,768	0.02	$12,862	$0.08	$6,388	3.25
XAX Average	3,634	0.06	$12,222	$0.22	$5,893	2.21
XEX Average	1,805	0.03	$3,471	$0.06	$236	14.71
ALL Average	3,268	0.06	$10,472	$0.18	$3,901	5.21

CTZ10 Riverside - Condenser Specific Efficiency						
	Energy Savings (kWh)	Energy Savings/ SF (kWh)	TDV Cost Savings ($)	TDV Cost Savings /SF ($)	Measure Cost ($)	Benefit/ Cost Ratio
SAC-EC	2,252	0.14	$7,752	$0.49	$1,853	4.18
SAC-Non-EC	2,252	0.14	$7,752	$0.49	$1,177	6.59
SAD-EC	2,014	0.13	$7,716	$0.49	$1,906	4.05
SAD-Non-EC	2,014	0.13	$7,716	$0.49	$1,210	6.38
SEC	471	0.03	$881	$0.06	$79	11.17
MAC-EC	8,795	0.15	$28,461	$0.48	$6,050	4.70
MAC-Non-EC	8,795	0.15	$28,461	$0.48	$3,841	7.41
MAD-EC	7,913	0.13	$27,696	$0.47	$6,228	4.45
MAD-Non-EC	7,913	0.13	$27,696	$0.47	$3,955	7.00
MEC	3,267	0.05	$6,230	$0.10	$277	22.49
LAC-EC	9,877	0.06	$36,889	$0.23	$9,459	3.90
LAC-Non-EC	9,877	0.06	$36,889	$0.23	$6,006	6.14
LAD-EC	6,715	0.04	$29,885	$0.18	$9,862	3.03
LAD-Non-EC	6,715	0.04	$29,885	$0.18	$6,262	4.77
LEC	1,427	0.01	$2,741	$0.02	$352	7.78
SXX Average	1,801	0.11	$6,363	$0.40	$1,245	6.47
MXX Average	7,337	0.12	$23,709	$0.40	$4,070	9.21
LXX Average	6,922	0.04	$27,258	$0.17	$6,388	5.12
XAX Average	6,261	0.11	$23,066	$0.39	$5,893	4.05
XEX Average	1,722	0.03	$3,284	$0.06	$236	13.81

CTZ12 Sacramento - Condenser Specific Efficiency						
	Energy Savings (kWh)	Energy Savings/ SF (kWh)	TDV Cost Savings ($)	TDV Cost Savings /SF ($)	Measure Cost ($)	Benefit/ Cost Ratio
SAC-EC	1,906	0.12	$7,066	$0.45	$1,853	3.81
SAC-Non-EC	1,906	0.12	$7,066	$0.45	$1,177	6.01
SAD-EC	1,687	0.11	$7,040	$0.44	$1,906	3.69
SAD-Non-EC	1,687	0.11	$7,040	$0.44	$1,210	5.82
SEC	467	0.03	$890	$0.06	$79	11.29
MAC-EC	7,417	0.12	$25,773	$0.43	$6,050	4.26
MAC-Non-EC	7,417	0.12	$25,773	$0.43	$3,841	6.71
MAD-EC	6,639	0.11	$25,195	$0.42	$6,228	4.05
MAD-Non-EC	6,639	0.11	$25,195	$0.42	$3,955	6.37
MEC	3,182	0.05	$6,141	$0.10	$277	22.17
LAC-EC	8,183	0.05	$33,356	$0.21	$9,459	3.53
LAC-Non-EC	8,183	0.05	$33,356	$0.21	$6,006	5.55
LAD-EC	5,700	0.04	$27,900	$0.17	$9,862	2.83
LAD-Non-EC	5,700	0.04	$27,900	$0.17	$6,262	4.46
LEC	1,384	0.01	$2,706	$0.02	$352	7.68
SXX Average	1,531	0.10	$5,820	$0.37	$1,245	6.12
MXX Average	6,259	0.11	$21,616	$0.36	$4,070	8.71
LXX Average	5,830	0.04	$25,044	$0.15	$6,388	4.81
XAX Average	5,255	0.09	$21,055	$0.35	$5,893	3.69
XEX Average	1,678	0.03	$3,245	$0.06	$236	13.71
ALL Average	4,540	0.08	$17,493	$0.29	$3,901	6.55

CTZ13 Fresno - Condenser Specific Efficiency						
	Energy Savings (kWh)	Energy Savings/ SF (kWh)	TDV Cost Savings ($)	TDV Cost Savings /SF ($)	Measure Cost ($)	Benefit/ Cost Ratio
SAC-EC	2,723	0.17	$8,633	$0.54	$1,853	4.66
SAC-Non-EC	2,723	0.17	$8,633	$0.54	$1,177	7.34
SAD-EC	2,605	0.16	$8,837	$0.56	$1,906	4.64
SAD-Non-EC	2,605	0.16	$8,837	$0.56	$1,210	7.30
SEC	453	0.03	$872	$0.06	$79	11.06
MAC-EC	10,449	0.18	$31,487	$0.53	$6,050	5.20
MAC-Non-EC	10,449	0.18	$31,487	$0.53	$3,841	8.20
MAD-EC	9,849	0.17	$31,220	$0.52	$6,228	5.01
MAD-Non-EC	9,849	0.17	$31,220	$0.52	$3,955	7.89
MEC	3,151	0.05	$6,114	$0.10	$277	22.07
LAC-EC	12,446	0.08	$42,273	$0.26	$9,459	4.47
LAC-Non-EC	12,446	0.08	$42,273	$0.26	$6,006	7.04
LAD-EC	9,615	0.06	$36,284	$0.22	$9,862	3.68
LAD-Non-EC	9,615	0.06	$36,284	$0.22	$6,262	5.79
LEC	1,401	0.01	$2,723	$0.02	$352	7.73
SXX Average	2,222	0.14	$7,162	$0.45	$1,245	7.00
MXX Average	8,749	0.15	$26,306	$0.44	$4,070	9.68
LXX Average	9,105	0.06	$31,968	$0.20	$6,388	5.74
XAX Average	7,948	0.14	$26,456	$0.44	$5,893	4.61
XEX Average	1,668	0.03	$3,237	$0.06	$236	13.62
ALL Average	6,692	0.11	$21,812	$0.36	$3,901	7.47

CTZ14 Palmdale - Condenser Specific Efficiency						
	Energy Savings (kWh)	Energy Savings/ SF (kWh)	TDV Cost Savings ($)	TDV Cost Savings /SF ($)	Measure Cost ($)	Benefit/ Cost Ratio
SAC-EC	2,725	0.17	$8,677	$0.55	$1,853	4.68
SAC-Non-EC	2,725	0.17	$8,677	$0.55	$1,177	7.37
SAD-EC	2,617	0.17	$8,882	$0.56	$1,906	4.66
SAD-Non-EC	2,617	0.17	$8,882	$0.56	$1,210	7.34
SEC	386	0.02	$756	$0.05	$79	9.59
MAC-EC	10,195	0.17	$31,122	$0.52	$6,050	5.14
MAC-Non-EC	10,195	0.17	$31,122	$0.52	$3,841	8.10
MAD-EC	9,715	0.16	$31,149	$0.52	$6,228	5.00
MAD-Non-EC	9,715	0.16	$31,149	$0.52	$3,955	7.88
MEC	2,669	0.04	$5,340	$0.09	$277	19.27
LAC-EC	12,556	0.08	$42,300	$0.26	$9,459	4.47
LAC-Non-EC	12,556	0.08	$42,300	$0.26	$6,006	7.04
LAD-EC	9,744	0.06	$36,257	$0.22	$9,862	3.68
LAD-Non-EC	9,744	0.06	$36,257	$0.22	$6,262	5.79
LEC	1,280	0.01	$2,545	$0.02	$352	7.22
SXX Average	2,214	0.14	$7,175	$0.45	$1,245	6.73
MXX Average	8,498	0.14	$25,976	$0.44	$4,070	9.08
LXX Average	9,176	0.06	$31,932	$0.20	$6,388	5.64
XAX Average	7,925	0.13	$26,398	$0.44	$5,893	4.61
XEX Average	1,445	0.03	$2,881	$0.05	$236	12.03
ALL Average	6,629	0.11	$21,694	$0.36	$3,901	7.15

CTZ15 Palm Springs - Condenser Specific Efficiency						
	Energy Savings (kWh)	Energy Savings/ SF (kWh)	TDV Cost Savings ($)	TDV Cost Savings /SF ($)	Measure Cost ($)	Benefit/ Cost Ratio
SAC-EC	5,478	0.35	$13,492	$0.85	$1,853	7.28
SAC-Non-EC	5,478	0.35	$13,492	$0.85	$1,177	11.47
SAD-EC	5,453	0.34	$13,688	$0.86	$1,906	7.18
SAD-Non-EC	5,453	0.34	$13,688	$0.86	$1,210	11.31
SEC	450	0.03	$890	$0.06	$79	11.29
MAC-EC	19,835	0.33	$47,239	$0.79	$6,050	7.81
MAC-Non-EC	19,835	0.33	$47,239	$0.79	$3,841	12.30
MAD-EC	19,474	0.33	$47,364	$0.80	$6,228	7.60
MAD-Non-EC	19,474	0.33	$47,364	$0.80	$3,955	11.98
MEC	3,349	0.06	$6,844	$0.11	$277	24.70
LAC-EC	26,006	0.16	$66,062	$0.41	$9,459	6.98
LAC-Non-EC	26,006	0.16	$66,062	$0.41	$6,006	11.00
LAD-EC	21,639	0.13	$57,172	$0.35	$9,862	5.80
LAD-Non-EC	21,639	0.13	$57,172	$0.35	$6,262	9.13
LEC	1,570	0.01	$3,159	$0.02	$352	8.96
SXX Average	4,462	0.28	$11,050	$0.70	$1,245	9.71
MXX Average	16,393	0.28	$39,210	$0.66	$4,070	12.88
LXX Average	19,372	0.12	$49,925	$0.31	$6,388	8.37
XAX Average	16,314	0.27	$40,836	$0.68	$5,893	7.11
XEX Average	1,790	0.03	$3,631	$0.06	$236	14.99
ALL Average	13,409	0.23	$33,395	$0.55	$3,901	10.32

15.3 Floating Suction Pressure

CTZ01 Arcata - Floating Suction Pressure						
	Energy Savings (kWh)	Energy Savings/ SF (kWh)	TDV Cost Savings ($)	TDV Cost Savings /SF ($)	Measure Cost ($)	Benefit/ Cost Ratio
SAC	6,517	0.41	$ 12,442	$ 0.79	$ 5,075	2.45
SAD	8,917	0.56	$ 17,141	$ 1.08	$ 5,075	3.38
SEC	6,534	0.41	$ 12,424	$ 0.78	$ 5,075	2.45
SFC	7,263	0.46	$ 13,964	$ 0.88	$ 5,075	2.75
SFD	10,557	0.67	$ 20,460	$ 1.29	$ 5,075	4.03
MAC	28,350	0.48	$ 53,015	$ 0.89	$ 10,149	5.22
MAD	31,368	0.53	$ 60,002	$ 1.01	$ 10,149	5.91
MEC	28,097	0.47	$ 53,567	$ 0.90	$ 10,149	5.28
MFC	32,856	0.55	$ 62,333	$ 1.05	$ 10,149	6.14
MFD	38,106	0.64	$ 73,049	$ 1.23	$ 10,149	7.20
LAC	39,151	0.24	$ 75,621	$ 0.47	$ 10,149	7.45
LAD	46,401	0.29	$ 89,086	$ 0.55	$ 10,149	8.78
LEC	40,389	0.25	$ 77,970	$ 0.48	$ 10,149	7.68
LFC	46,092	0.28	$ 88,899	$ 0.55	$ 10,149	8.76
LFD	57,632	0.36	$ 110,356	$ 0.68	$ 10,149	10.87
SXX Average	7,958	0.50	$ 15,286	$ 0.96	$ 5,075	3.01
MXX Average	31,755	0.53	$ 60,393	$ 1.01	$ 10,149	5.95
LXX Average	45,933	0.28	$ 88,386	$ 0.55	$ 10,149	8.71
XAX Average	26,784	0.42	$ 51,218	$ 0.80	$ 8,458	6.06
XEX Average	25,007	0.38	$ 47,987	$ 0.72	$ 8,458	5.67
XFX Average	32,084	0.49	$ 61,510	$ 0.95	$ 8,458	7.27
ALL Average	28,549	0.44	$ 54,689	$ 0.84	$ 8,458	6.47

CTZ03 Oakland - Floating Suction Pressure						
	Energy Savings (kWh)	Energy Savings/ SF (kWh)	TDV Cost Savings ($)	TDV Cost Savings /SF ($)	Measure Cost ($)	Benefit/ Cost Ratio
SAC	6,734	0.42	$ 13,154	$ 0.83	$ 5,075	2.59
SAD	9,196	0.58	$ 17,826	$ 1.12	$ 5,075	3.51
SEC	6,691	0.42	$ 12,646	$ 0.80	$ 5,075	2.49
SFC	7,484	0.47	$ 14,382	$ 0.91	$ 5,075	2.83
SFD	10,885	0.69	$ 20,968	$ 1.32	$ 5,075	4.13
MAC	29,064	0.49	$ 55,810	$ 0.94	$ 10,149	5.50
MAD	32,332	0.54	$ 62,769	$ 1.05	$ 10,149	6.18
MEC	29,173	0.49	$ 55,231	$ 0.93	$ 10,149	5.44
MFC	33,727	0.57	$ 63,748	$ 1.07	$ 10,149	6.28
MFD	39,844	0.67	$ 76,653	$ 1.29	$ 10,149	7.55
LAC	40,939	0.25	$ 82,625	$ 0.51	$ 10,149	8.14
LAD	47,450	0.29	$ 91,044	$ 0.56	$ 10,149	8.97
LEC	41,988	0.26	$ 81,948	$ 0.51	$ 10,149	8.07
LFC	47,934	0.30	$ 93,411	$ 0.58	$ 10,149	9.20
LFD	59,211	0.37	$ 113,854	$ 0.70	$ 10,149	11.22
SXX Average	8,198	0.52	$ 15,795	$ 1.00	$ 5,075	3.11
MXX Average	32,828	0.55	$ 62,842	$ 1.06	$ 10,149	6.19

LXX Average	47,504	0.29	$ 92,576	$ 0.57	$ 10,149	9.12
XAX Average	27,619	0.43	$ 53,871	$ 0.84	$ 8,458	6.37
XEX Average	25,951	0.39	$ 49,942	$ 0.74	$ 8,458	5.90
XFX Average	33,181	0.51	$ 63,836	$ 0.98	$ 8,458	7.55
ALL Average	29,510	0.45	$ 57,071	$ 0.87	$ 8,458	6.75

CTZ05 Santa Maria - Floating Suction Pressure						
	Energy Savings (kWh)	Energy Savings/ SF (kWh)	TDV Cost Savings ($)	TDV Cost Savings /SF ($)	Measure Cost ($)	Benefit/ Cost Ratio
SAC	6,726	0.42	$ 13,056	$ 0.82	$ 5,075	2.57
SAD	9,159	0.58	$ 17,701	$ 1.12	$ 5,075	3.49
SEC	6,662	0.42	$ 12,691	$ 0.80	$ 5,075	2.50
SFC	7,418	0.47	$ 14,293	$ 0.90	$ 5,075	2.82
SFD	10,779	0.68	$ 20,834	$ 1.31	$ 5,075	4.11
MAC	28,905	0.49	$ 55,329	$ 0.93	$ 10,149	5.45
MAD	32,203	0.54	$ 62,146	$ 1.04	$ 10,149	6.12
MEC	28,872	0.48	$ 54,956	$ 0.92	$ 10,149	5.41
MFC	33,430	0.56	$ 63,375	$ 1.06	$ 10,149	6.24
MFD	39,296	0.66	$ 75,567	$ 1.27	$ 10,149	7.45
LAC	40,736	0.25	$ 81,930	$ 0.51	$ 10,149	8.07
LAD	47,067	0.29	$ 90,047	$ 0.56	$ 10,149	8.87
LEC	41,572	0.26	$ 81,227	$ 0.50	$ 10,149	8.00
LFC	47,701	0.29	$ 92,824	$ 0.57	$ 10,149	9.15
LFD	58,964	0.36	$ 113,845	$ 0.70	$ 10,149	11.22
SXX Average	8,149	0.51	$ 15,715	$ 0.99	$ 5,075	3.10
MXX Average	32,541	0.55	$ 62,275	$ 1.05	$ 10,149	6.14
LXX Average	47,208	0.29	$ 91,975	$ 0.57	$ 10,149	9.06
XAX Average	27,466	0.43	$ 53,368	$ 0.83	$ 8,458	6.31
XEX Average	25,702	0.39	$ 49,625	$ 0.74	$ 8,458	5.87
XFX Average	32,931	0.50	$ 63,456	$ 0.97	$ 8,458	7.50
ALL Average	29,299	0.45	$ 56,655	$ 0.87	$ 8,458	6.70

CTZ07 San Diego-Lindbergh - Floating Suction Pressure						
	Energy Savings (kWh)	Energy Savings/ SF (kWh)	TDV Cost Savings ($)	TDV Cost Savings /SF ($)	Measure Cost ($)	Benefit/ Cost Ratio
SAC	7,079	0.45	$ 13,919	$ 0.88	$ 5,075	2.74
SAD	9,639	0.61	$ 18,805	$ 1.19	$ 5,075	3.71
SEC	7,006	0.44	$ 13,385	$ 0.84	$ 5,075	2.64
SFC	7,922	0.50	$ 15,450	$ 0.97	$ 5,075	3.04
SFD	11,562	0.73	$ 22,409	$ 1.41	$ 5,075	4.42
MAC	27,095	0.45	$ 50,773	$ 0.85	$ 10,149	5.00
MAD	31,510	0.53	$ 60,011	$ 1.01	$ 10,149	5.91
MEC	28,377	0.48	$ 52,286	$ 0.88	$ 10,149	5.15
MFC	33,087	0.56	$ 62,129	$ 1.04	$ 10,149	6.12
MFD	40,580	0.68	$ 77,961	$ 1.31	$ 10,149	7.68
LAC	42,336	0.26	$ 85,855	$ 0.53	$ 10,149	8.46
LAD	47,543	0.29	$ 91,391	$ 0.56	$ 10,149	9.00
LEC	44,164	0.27	$ 86,362	$ 0.53	$ 10,149	8.51
LFC	50,824	0.31	$ 100,282	$ 0.62	$ 10,149	9.88
LFD	61,220	0.38	$ 119,176	$ 0.74	$ 10,149	11.74
SXX Average	8,642	0.55	$ 16,794	$ 1.06	$ 5,075	3.31
MXX Average	32,130	0.54	$ 60,632	$ 1.02	$ 10,149	5.97
LXX Average	49,217	0.30	$ 96,613	$ 0.60	$ 10,149	9.52
XAX Average	27,534	0.43	$ 53,459	$ 0.84	$ 8,458	6.32
XEX Average	26,516	0.40	$ 50,678	$ 0.75	$ 8,458	5.99

XFX Average	34,199	0.53	$ 66,234	$ 1.02	$ 8,458	7.83
ALL Average	29,996	0.46	$ 58,013	$ 0.89	$ 8,458	6.86

CTZ08 Fullerton - Floating Suction Pressure						
	Energy Savings (kWh)	Energy Savings/ SF (kWh)	TDV Cost Savings ($)	TDV Cost Savings /SF ($)	Measure Cost ($)	Benefit/ Cost Ratio
SAC	7,244	0.46	$ 14,587	$ 0.92	$ 5,075	2.87
SAD	9,582	0.60	$ 19,731	$ 1.24	$ 5,075	3.89
SEC	6,620	0.42	$ 12,620	$ 0.80	$ 5,075	2.49
SFC	7,465	0.47	$ 14,471	$ 0.91	$ 5,075	2.85
SFD	10,794	0.68	$ 21,066	$ 1.33	$ 5,075	4.15
MAC	30,022	0.50	$ 56,068	$ 0.94	$ 10,149	5.52
MAD	31,712	0.53	$ 61,461	$ 1.03	$ 10,149	6.06
MEC	27,915	0.47	$ 50,986	$ 0.86	$ 10,149	5.02
MFC	32,636	0.55	$ 60,669	$ 1.02	$ 10,149	5.98
MFD	38,290	0.64	$ 72,897	$ 1.22	$ 10,149	7.18
LAC	46,292	0.29	$ 95,298	$ 0.59	$ 10,149	9.39
LAD	49,172	0.30	$ 97,113	$ 0.60	$ 10,149	9.57
LEC	44,216	0.27	$ 85,392	$ 0.53	$ 10,149	8.41
LFC	50,509	0.31	$ 97,914	$ 0.60	$ 10,149	9.65
LFD	62,622	0.39	$ 120,226	$ 0.74	$ 10,149	11.85
SXX Average	8,341	0.53	$ 16,495	$ 1.04	$ 5,075	3.25
MXX Average	32,115	0.54	$ 60,416	$ 1.01	$ 10,149	5.95
LXX Average	50,562	0.31	$ 99,189	$ 0.61	$ 10,149	9.77
XAX Average	29,004	0.45	$ 57,376	$ 0.89	$ 8,458	6.78
XEX Average	26,250	0.39	$ 49,666	$ 0.73	$ 8,458	5.87
XFX Average	33,719	0.51	$ 64,540	$ 0.97	$ 8,458	7.63
ALL Average	30,339	0.46	$ 58,700	$ 0.89	$ 8,458	6.94

CTZ10 Riverside - Floating Suction Pressure						
	Energy Savings (kWh)	Energy Savings/ SF (kWh)	TDV Cost Savings ($)	TDV Cost Savings /SF ($)	Measure Cost ($)	Benefit/ Cost Ratio
SAC	7,509	0.47	$ 15,094	$ 0.95	$ 5,075	2.97
SAD	9,812	0.62	$ 20,131	$ 1.27	$ 5,075	3.97
SEC	6,721	0.42	$ 12,664	$ 0.80	$ 5,075	2.50
SFC	7,594	0.48	$ 14,640	$ 0.92	$ 5,075	2.88
SFD	11,001	0.69	$ 21,137	$ 1.33	$ 5,075	4.16
MAC	32,565	0.55	$ 63,989	$ 1.07	$ 10,149	6.30
MAD	34,383	0.58	$ 70,735	$ 1.19	$ 10,149	6.97
MEC	28,811	0.48	$ 52,517	$ 0.88	$ 10,149	5.17
MFC	33,897	0.57	$ 63,526	$ 1.07	$ 10,149	6.26
MFD	39,147	0.66	$ 75,407	$ 1.27	$ 10,149	7.43
LAC	49,034	0.30	$ 102,782	$ 0.63	$ 10,149	10.13
LAD	50,786	0.31	$ 103,850	$ 0.64	$ 10,149	10.23
LEC	44,043	0.27	$ 84,939	$ 0.52	$ 10,149	8.37
LFC	50,234	0.31	$ 97,612	$ 0.60	$ 10,149	9.62
LFD	62,400	0.38	$ 119,603	$ 0.74	$ 10,149	11.78
SXX Average	8,527	0.54	$ 16,733	$ 1.06	$ 5,075	3.30
MXX Average	33,761	0.57	$ 65,235	$ 1.10	$ 10,149	6.43
LXX Average	51,299	0.32	$ 101,757	$ 0.63	$ 10,149	10.03
XAX Average	30,682	0.47	$ 62,764	$ 0.96	$ 8,458	7.42
XEX Average	26,525	0.39	$ 50,040	$ 0.73	$ 8,458	5.92

XFX Average	34,046	0.52	$ 65,321	$ 0.99	$ 8,458	7.72
ALL Average	31,196	0.47	$ 61,242	$ 0.93	$ 8,458	7.24

CTZ12 Sacramento - Floating Suction Pressure						
	Energy Savings (kWh)	Energy Savings/ SF (kWh)	TDV Cost Savings ($)	TDV Cost Savings /SF ($)	Measure Cost ($)	Benefit/ Cost Ratio
SAC	7,244	0.46	$ 14,587	$ 0.92	$ 5,075	2.87
SAD	9,582	0.60	$ 19,731	$ 1.24	$ 5,075	3.89
SEC	6,620	0.42	$ 12,620	$ 0.80	$ 5,075	2.49
SFC	7,465	0.47	$ 14,471	$ 0.91	$ 5,075	2.85
SFD	10,794	0.68	$ 21,066	$ 1.33	$ 5,075	4.15
MAC	33,136	0.56	$ 66,979	$ 1.12	$ 10,149	6.60
MAD	34,564	0.58	$ 72,452	$ 1.22	$ 10,149	7.14
MEC	29,506	0.50	$ 56,095	$ 0.94	$ 10,149	5.53
MFC	34,372	0.58	$ 66,036	$ 1.11	$ 10,149	6.51
MFD	39,173	0.66	$ 77,196	$ 1.30	$ 10,149	7.61
LAC	47,095	0.29	$ 99,445	$ 0.61	$ 10,149	9.80
LAD	49,764	0.31	$ 102,186	$ 0.63	$ 10,149	10.07
LEC	43,290	0.27	$ 84,476	$ 0.52	$ 10,149	8.32
LFC	49,101	0.30	$ 96,072	$ 0.59	$ 10,149	9.47
LFD	61,260	0.38	$ 118,473	$ 0.73	$ 10,149	11.67
SXX Average	8,341	0.53	$ 16,495	$ 1.04	$ 5,075	3.25
MXX Average	34,150	0.57	$ 67,751	$ 1.14	$ 10,149	6.68
LXX Average	50,102	0.31	$ 100,130	$ 0.62	$ 10,149	9.87
XAX Average	30,231	0.47	$ 62,563	$ 0.96	$ 8,458	7.40
XEX Average	26,472	0.39	$ 51,063	$ 0.75	$ 8,458	6.04
XFX Average	33,694	0.51	$ 65,552	$ 1.00	$ 8,458	7.75
ALL Average	30,864	0.47	$ 61,459	$ 0.93	$ 8,458	7.27

CTZ13 Fresno - Floating Suction Pressure						
	Energy Savings (kWh)	Energy Savings/ SF (kWh)	TDV Cost Savings ($)	TDV Cost Savings /SF ($)	Measure Cost ($)	Benefit/ Cost Ratio
SAC	7,695	0.49	$ 15,503	$ 0.98	$ 5,075	3.05
SAD	10,030	0.63	$ 20,816	$ 1.31	$ 5,075	4.10
SEC	6,701	0.42	$ 12,709	$ 0.80	$ 5,075	2.50
SFC	7,564	0.48	$ 14,676	$ 0.93	$ 5,075	2.89
SFD	10,934	0.69	$ 21,199	$ 1.34	$ 5,075	4.18
MAC	34,787	0.58	$ 69,791	$ 1.17	$ 10,149	6.88
MAD	36,698	0.62	$ 77,160	$ 1.30	$ 10,149	7.60
MEC	30,171	0.51	$ 56,780	$ 0.95	$ 10,149	5.59
MFC	35,121	0.59	$ 67,744	$ 1.14	$ 10,149	6.67
MFD	40,050	0.67	$ 79,287	$ 1.33	$ 10,149	7.81
LAC	50,609	0.31	$ 105,799	$ 0.65	$ 10,149	10.42
LAD	52,149	0.32	$ 107,597	$ 0.66	$ 10,149	10.60
LEC	44,138	0.27	$ 85,740	$ 0.53	$ 10,149	8.45
LFC	50,116	0.31	$ 98,235	$ 0.61	$ 10,149	9.68
LFD	62,267	0.38	$ 120,350	$ 0.74	$ 10,149	11.86
SXX Average	8,585	0.54	$ 16,981	$ 1.07	$ 5,075	3.35
MXX Average	35,365	0.59	$ 70,153	$ 1.18	$ 10,149	6.91
LXX Average	51,856	0.32	$ 103,544	$ 0.64	$ 10,149	10.20
XAX Average	31,995	0.49	$ 66,111	$ 1.01	$ 8,458	7.82
XEX Average	27,003	0.40	$ 51,743	$ 0.76	$ 8,458	6.12

XFX Average	34,342	0.52	$ 66,915	$ 1.01	$ 8,458	7.91
ALL Average	31,935	0.49	$ 63,559	$ 0.96	$ 8,458	7.51

CTZ14 Palmdale - Floating Suction Pressure						
	Energy Savings (kWh)	Energy Savings/ SF (kWh)	TDV Cost Savings ($)	TDV Cost Savings /SF ($)	Measure Cost ($)	Benefit/ Cost Ratio
SAC	7,448	0.47	$ 14,782	$ 0.93	$ 5,075	2.91
SAD	9,854	0.62	$ 20,149	$ 1.27	$ 5,075	3.97
SEC	6,458	0.41	$ 12,317	$ 0.78	$ 5,075	2.43
SFC	7,179	0.45	$ 13,839	$ 0.87	$ 5,075	2.73
SFD	10,410	0.66	$ 20,229	$ 1.28	$ 5,075	3.99
MAC	35,043	0.59	$ 70,049	$ 1.18	$ 10,149	6.90
MAD	35,878	0.60	$ 74,535	$ 1.25	$ 10,149	7.34
MEC	29,774	0.50	$ 56,557	$ 0.95	$ 10,149	5.57
MFC	34,398	0.58	$ 65,635	$ 1.10	$ 10,149	6.47
MFD	38,051	0.64	$ 74,366	$ 1.25	$ 10,149	7.33
LAC	50,225	0.31	$ 104,180	$ 0.64	$ 10,149	10.27
LAD	51,550	0.32	$ 105,381	$ 0.65	$ 10,149	10.38
LEC	43,079	0.27	$ 83,790	$ 0.52	$ 10,149	8.26
LFC	48,925	0.30	$ 95,182	$ 0.59	$ 10,149	9.38
LFD	61,025	0.38	$ 117,235	$ 0.72	$ 10,149	11.55
SXX Average	8,270	0.52	$ 16,263	$ 1.03	$ 5,075	3.20
MXX Average	34,629	0.58	$ 68,228	$ 1.15	$ 10,149	6.72
LXX Average	50,961	0.31	$ 101,154	$ 0.62	$ 10,149	9.97
XAX Average	31,666	0.49	$ 64,846	$ 0.99	$ 8,458	7.67
XEX Average	26,437	0.39	$ 50,888	$ 0.75	$ 8,458	6.02
XFX Average	33,331	0.50	$ 64,414	$ 0.97	$ 8,458	7.62
ALL Average	31,286	0.47	$ 61,882	$ 0.93	$ 8,458	7.32

CTZ15 Palm Springs - Floating Suction Pressure						
	Energy Savings (kWh)	Energy Savings/ SF (kWh)	TDV Cost Savings ($)	TDV Cost Savings /SF ($)	Measure Cost ($)	Benefit/ Cost Ratio
SAC	8,711	0.55	$ 17,657	$ 1.11	$ 5,075	3.48
SAD	11,721	0.74	$ 24,697	$ 1.56	$ 5,075	4.87
SEC	6,863	0.43	$ 13,118	$ 0.83	$ 5,075	2.58
SFC	7,786	0.49	$ 15,192	$ 0.96	$ 5,075	2.99
SFD	11,259	0.71	$ 21,938	$ 1.38	$ 5,075	4.32
MAC	39,089	0.66	$ 77,943	$ 1.31	$ 10,149	7.68
MAD	43,925	0.74	$ 94,541	$ 1.59	$ 10,149	9.32
MEC	31,226	0.52	$ 57,946	$ 0.97	$ 10,149	5.71
MFC	36,768	0.62	$ 69,969	$ 1.17	$ 10,149	6.89
MFD	42,564	0.71	$ 83,746	$ 1.41	$ 10,149	8.25
LAC	60,618	0.37	$ 121,312	$ 0.75	$ 10,149	11.95
LAD	60,881	0.38	$ 129,036	$ 0.80	$ 10,149	12.71
LEC	46,544	0.29	$ 89,958	$ 0.55	$ 10,149	8.86
LFC	53,662	0.33	$ 105,150	$ 0.65	$ 10,149	10.36
LFD	65,726	0.41	$ 127,728	$ 0.79	$ 10,149	12.59
SXX Average	9,268	0.58	$ 18,520	$ 1.17	$ 5,075	3.65
MXX Average	38,714	0.65	$ 76,829	$ 1.29	$ 10,149	7.57
LXX Average	57,486	0.35	$ 114,637	$ 0.71	$ 10,149	11.30
XAX Average	37,491	0.57	$ 77,531	$ 1.19	$ 8,458	9.17
XEX Average	28,211	0.41	$ 53,674	$ 0.79	$ 8,458	6.35

XFX Average	36,294	0.55	$ 70,620	$ 1.06	$ 8,458	8.35
ALL Average	35,156	0.53	$ 69,995	$ 1.06	$ 8,458	8.28

15.4 Mechanical Subcooling

CTZ01 Arcata - Mechanical Subcooling						
	Energy Savings (kWh)	Energy Savings/ SF (kWh)	TDV Cost Savings ($)	TDV Cost Savings /SF ($)	Measure Cost ($)	Benefit/ Cost Ratio
SAC	6,566	0.41	$ 12,397	$ 0.78	$ 4,645	2.67
SAD	4,207	0.27	$ 7,645	$ 0.48	$ 4,220	1.81
SEC	6,985	0.44	$ 13,127	$ 0.83	$ 4,645	2.83
SFC	10,793	0.68	$ 20,460	$ 1.29	$ 4,645	4.40
SFD	12,126	0.77	$ 23,148	$ 1.46	$ 4,220	5.49
MAC	14,708	0.25	$ 26,984	$ 0.45	$ 8,582	3.14
MAD	11,593	0.19	$ 21,680	$ 0.36	$ 7,059	3.07
MEC	16,719	0.28	$ 31,718	$ 0.53	$ 8,582	3.70
MFC	29,680	0.50	$ 55,952	$ 0.94	$ 8,582	6.52
MFD	34,527	0.58	$ 65,653	$ 1.10	$ 7,059	9.30
LAC	52,771	0.33	$ 100,994	$ 0.62	$ 15,793	6.39
LAD	22,368	0.14	$ 41,357	$ 0.26	$ 11,863	3.49
LEC	51,627	0.32	$ 98,466	$ 0.61	$ 15,793	6.23
LFC	86,561	0.53	$ 165,401	$ 1.02	$ 15,793	10.47
LFD	71,323	0.44	$ 135,044	$ 0.83	$ 11,863	11.38
SXX Average	8,135	0.51	$ 15,356	$ 0.97	$ 4,475	3.43
MXX Average	21,445	0.36	$ 40,397	$ 0.68	$ 7,973	5.07
LXX Average	56,930	0.35	$ 108,252	$ 0.67	$ 14,221	7.61
XAX Average	18,702	0.26	$ 35,176	$ 0.49	$ 8,694	4.05
XEX Average	25,110	0.35	$ 47,771	$ 0.66	$ 9,673	4.94
XFX Average	40,835	0.58	$ 77,610	$ 1.11	$ 8,694	8.93
ALL Average	28,837	0.41	$ 54,668	$ 0.77	$ 8,890	6.15

CTZ03 Oakland - Mechanical Subcooling						
	Energy Savings (kWh)	Energy Savings/ SF (kWh)	TDV Cost Savings ($)	TDV Cost Savings /SF ($)	Measure Cost ($)	Benefit/ Cost Ratio
SAC	6,523	0.41	$ 12,727	$ 0.80	$ 4,645	2.74
SAD	4,199	0.26	$ 8,837	$ 0.56	$ 4,220	2.09
SEC	7,098	0.45	$ 13,314	$ 0.84	$ 4,645	2.87
SFC	10,958	0.69	$ 20,825	$ 1.31	$ 4,645	4.48
SFD	12,413	0.78	$ 23,638	$ 1.49	$ 4,220	5.60
MAC	14,559	0.24	$ 28,337	$ 0.48	$ 8,582	3.30
MAD	12,104	0.20	$ 26,441	$ 0.44	$ 7,059	3.75
MEC	17,456	0.29	$ 33,748	$ 0.57	$ 8,582	3.93
MFC	30,339	0.51	$ 57,358	$ 0.96	$ 8,582	6.68
MFD	36,299	0.61	$ 69,862	$ 1.17	$ 7,059	9.90
LAC	55,131	0.34	$ 115,589	$ 0.71	$ 15,793	7.32
LAD	22,838	0.14	$ 49,998	$ 0.31	$ 11,863	4.21
LEC	53,160	0.33	$ 102,257	$ 0.63	$ 15,793	6.47
LFC	89,317	0.55	$ 172,387	$ 1.06	$ 15,793	10.92
LFD	73,635	0.45	$ 141,692	$ 0.87	$ 11,863	11.94
SXX Average	8,238	0.52	$ 15,868	$ 1.00	$ 4,475	3.55
MXX Average	22,151	0.37	$ 43,149	$ 0.72	$ 7,973	5.41

LXX Average	58,816	0.36	$ 116,385	$ 0.72	$ 14,221	8.18
XAX Average	19,226	0.27	$ 40,321	$ 0.55	$ 8,694	4.64
XEX Average	25,905	0.36	$ 49,773	$ 0.68	$ 9,673	5.15
XFX Average	42,160	0.60	$ 80,960	$ 1.15	$ 8,694	9.31
ALL Average	29,735	0.42	$ 58,467	$ 0.81	$ 8,890	6.58

CTZ05 Santa Maria - Mechanical Subcooling						
	Energy Savings (kWh)	Energy Savings/ SF (kWh)	TDV Cost Savings ($)	TDV Cost Savings /SF ($)	Measure Cost ($)	Benefit/ Cost Ratio
SAC	6,554	0.41	$ 12,540	$ 0.79	$ 4,645	2.70
SAD	4,198	0.26	$ 8,312	$ 0.52	$ 4,220	1.97
SEC	7,084	0.45	$ 13,376	$ 0.84	$ 4,645	2.88
SFC	10,899	0.69	$ 20,674	$ 1.30	$ 4,645	4.45
SFD	12,339	0.78	$ 23,513	$ 1.48	$ 4,220	5.57
MAC	14,448	0.24	$ 26,806	$ 0.45	$ 8,582	3.12
MAD	12,002	0.20	$ 24,519	$ 0.41	$ 7,059	3.47
MEC	17,255	0.29	$ 33,071	$ 0.56	$ 8,582	3.85
MFC	30,152	0.51	$ 56,878	$ 0.95	$ 8,582	6.63
MFD	35,717	0.60	$ 68,314	$ 1.15	$ 7,059	9.68
LAC	54,855	0.34	$ 111,789	$ 0.69	$ 15,793	7.08
LAD	22,693	0.14	$ 45,691	$ 0.28	$ 11,863	3.85
LEC	52,757	0.33	$ 101,750	$ 0.63	$ 15,793	6.44
LFC	88,876	0.55	$ 171,719	$ 1.06	$ 15,793	10.87
LFD	73,150	0.45	$ 140,775	$ 0.87	$ 11,863	11.87
SXX Average	8,215	0.52	$ 15,683	$ 0.99	$ 4,475	3.50
MXX Average	21,915	0.37	$ 41,917	$ 0.70	$ 7,973	5.26
LXX Average	58,466	0.36	$ 114,345	$ 0.71	$ 14,221	8.04
XAX Average	19,125	0.27	$ 38,276	$ 0.52	$ 8,694	4.40
XEX Average	25,699	0.35	$ 49,399	$ 0.68	$ 9,673	5.11
XFX Average	41,856	0.60	$ 80,312	$ 1.14	$ 8,694	9.24
ALL Average	29,532	0.42	$ 57,315	$ 0.80	$ 8,890	6.45

CTZ07 San Diego-Lindbergh - Mechanical Subcooling						
	Energy Savings (kWh)	Energy Savings/ SF (kWh)	TDV Cost Savings ($)	TDV Cost Savings /SF ($)	Measure Cost ($)	Benefit/ Cost Ratio
SAC	6,509	0.41	$ 12,762	$ 0.81	$ 4,645	2.75
SAD	4,006	0.25	$ 8,330	$ 0.53	$ 4,220	1.97
SEC	7,395	0.47	$ 14,124	$ 0.89	$ 4,645	3.04
SFC	11,362	0.72	$ 21,973	$ 1.39	$ 4,645	4.73
SFD	13,094	0.83	$ 25,409	$ 1.60	$ 4,220	6.02
MAC	14,783	0.25	$ 29,049	$ 0.49	$ 8,582	3.38
MAD	12,211	0.21	$ 25,978	$ 0.44	$ 7,059	3.68
MEC	19,416	0.33	$ 37,984	$ 0.64	$ 8,582	4.43
MFC	32,131	0.54	$ 63,517	$ 1.07	$ 8,582	7.40
MFD	40,752	0.68	$ 82,731	$ 1.39	$ 7,059	11.72
LAC	56,998	0.35	$ 119,256	$ 0.74	$ 15,793	7.55
LAD	22,716	0.14	$ 48,966	$ 0.30	$ 11,863	4.13
LEC	55,564	0.34	$ 108,523	$ 0.67	$ 15,793	6.87
LFC	93,715	0.58	$ 183,298	$ 1.13	$ 15,793	11.61
LFD	77,240	0.48	$ 150,698	$ 0.93	$ 11,863	12.70
SXX Average	8,473	0.53	$ 16,520	$ 1.04	$ 4,475	3.69
MXX Average	23,859	0.40	$ 47,852	$ 0.80	$ 7,973	6.00
LXX Average	61,247	0.38	$ 122,148	$ 0.75	$ 14,221	8.59
XAX Average	19,537	0.27	$ 40,723	$ 0.55	$ 8,694	4.68
XEX Average	27,458	0.38	$ 53,543	$ 0.73	$ 9,673	5.54

XFX Average	44,716	0.64	$ 87,938	$ 1.25	$ 8,694	10.12
ALL Average	31,193	0.44	$ 62,173	$ 0.87	$ 8,890	6.99

CTZ08 Fullerton - Mechanical Subcooling						
	Energy Savings (kWh)	Energy Savings/ SF (kWh)	TDV Cost Savings ($)	TDV Cost Savings /SF ($)	Measure Cost ($)	Benefit/ Cost Ratio
SAC	7,575	0.48	$ 16,892	$ 1.07	$ 4,645	3.64
SAD	6,002	0.38	$ 17,888	$ 1.13	$ 4,220	4.24
SEC	7,111	0.45	$ 13,652	$ 0.86	$ 4,645	2.94
SFC	11,049	0.70	$ 21,066	$ 1.33	$ 4,645	4.54
SFD	12,550	0.79	$ 24,296	$ 1.53	$ 4,220	5.76
MAC	20,276	0.34	$ 38,812	$ 0.65	$ 8,582	4.52
MAD	14,557	0.24	$ 37,103	$ 0.62	$ 7,059	5.26
MEC	18,899	0.32	$ 36,987	$ 0.62	$ 8,582	4.31
MFC	31,822	0.53	$ 61,986	$ 1.04	$ 8,582	7.22
MFD	39,686	0.67	$ 79,910	$ 1.34	$ 7,059	11.32
LAC	64,368	0.40	$ 144,219	$ 0.89	$ 15,793	9.13
LAD	26,880	0.17	$ 70,583	$ 0.44	$ 11,863	5.95
LEC	55,074	0.34	$ 106,307	$ 0.66	$ 15,793	6.73
LFC	92,879	0.57	$ 178,403	$ 1.10	$ 15,793	11.30
LFD	76,655	0.47	$ 147,174	$ 0.91	$ 11,863	12.41
SXX Average	8,857	0.56	$ 18,759	$ 1.18	$ 4,475	4.19
MXX Average	25,048	0.42	$ 50,960	$ 0.86	$ 7,973	6.39
LXX Average	63,171	0.39	$ 129,337	$ 0.80	$ 14,221	9.09
XAX Average	23,276	0.33	$ 54,249	$ 0.80	$ 8,694	6.24
XEX Average	27,028	0.37	$ 52,315	$ 0.71	$ 9,673	5.41
XFX Average	44,107	0.62	$ 85,473	$ 1.21	$ 8,694	9.83
ALL Average	32,359	0.46	$ 66,352	$ 0.95	$ 8,890	7.46

CTZ10 Riverside - Mechanical Subcooling						
	Energy Savings (kWh)	Energy Savings/ SF (kWh)	TDV Cost Savings ($)	TDV Cost Savings /SF ($)	Measure Cost ($)	Benefit/ Cost Ratio
SAC	7,724	0.49	$ 17,078	$ 1.08	$ 4,645	3.68
SAD	6,304	0.40	$ 18,885	$ 1.19	$ 4,220	4.48
SEC	7,194	0.45	$ 13,706	$ 0.86	$ 4,645	2.95
SFC	11,185	0.71	$ 21,306	$ 1.34	$ 4,645	4.59
SFD	12,802	0.81	$ 24,759	$ 1.56	$ 4,220	5.87
MAC	21,442	0.36	$ 46,180	$ 0.78	$ 8,582	5.38
MAD	19,840	0.33	$ 59,841	$ 1.00	$ 7,059	8.48
MEC	18,785	0.32	$ 37,058	$ 0.62	$ 8,582	4.32
MFC	31,824	0.53	$ 62,778	$ 1.05	$ 8,582	7.32
MFD	39,417	0.66	$ 81,227	$ 1.36	$ 7,059	11.51
LAC	74,176	0.46	$ 181,153	$ 1.12	$ 15,793	11.47
LAD	37,523	0.23	$ 118,846	$ 0.73	$ 11,863	10.02
LEC	55,066	0.34	$ 107,117	$ 0.66	$ 15,793	6.78
LFC	92,379	0.57	$ 178,020	$ 1.10	$ 15,793	11.27
LFD	76,380	0.47	$ 146,943	$ 0.91	$ 11,863	12.39
SXX Average	9,042	0.57	$ 19,147	$ 1.21	$ 4,475	4.28
MXX Average	26,262	0.44	$ 57,417	$ 0.96	$ 7,973	7.20
LXX Average	67,105	0.41	$ 146,416	$ 0.90	$ 14,221	10.30
XAX Average	27,835	0.38	$ 73,664	$ 0.98	$ 8,694	8.47
XEX Average	27,015	0.37	$ 52,627	$ 0.72	$ 9,673	5.44

XFX Average	43,998	0.63	$ 85,839	$ 1.22	$ 8,694	9.87
ALL Average	34,136	0.48	$ 74,327	$ 1.03	$ 8,890	8.36

CTZ12 Sacramento - Mechanical Subcooling						
	Energy Savings (kWh)	Energy Savings/ SF (kWh)	TDV Cost Savings ($)	TDV Cost Savings /SF ($)	Measure Cost ($)	Benefit/ Cost Ratio
SAC	7,575	0.48	$ 16,892	$ 1.07	$ 4,645	3.64
SAD	6,002	0.38	$ 17,888	$ 1.13	$ 4,220	4.24
SEC	7,111	0.45	$ 13,652	$ 0.86	$ 4,645	2.94
SFC	11,049	0.70	$ 21,066	$ 1.33	$ 4,645	4.54
SFD	12,550	0.79	$ 24,296	$ 1.53	$ 4,220	5.76
MAC	21,266	0.36	$ 45,922	$ 0.77	$ 8,582	5.35
MAD	18,534	0.31	$ 56,121	$ 0.94	$ 7,059	7.95
MEC	18,145	0.30	$ 36,079	$ 0.61	$ 8,582	4.20
MFC	31,189	0.52	$ 61,417	$ 1.03	$ 8,582	7.16
MFD	37,711	0.63	$ 77,116	$ 1.29	$ 7,059	10.92
LAC	70,764	0.44	$ 173,250	$ 1.07	$ 15,793	10.97
LAD	35,105	0.22	$ 110,712	$ 0.68	$ 11,863	9.33
LEC	54,164	0.33	$ 105,532	$ 0.65	$ 15,793	6.68
LFC	90,663	0.56	$ 175,582	$ 1.08	$ 15,793	11.12
LFD	75,201	0.46	$ 145,599	$ 0.90	$ 11,863	12.27
SXX Average	8,857	0.56	$ 18,759	$ 1.18	$ 4,475	4.19
MXX Average	25,369	0.43	$ 55,331	$ 0.93	$ 7,973	6.94
LXX Average	65,179	0.40	$ 142,135	$ 0.88	$ 14,221	9.99
XAX Average	26,541	0.36	$ 70,131	$ 0.94	$ 8,694	8.07
XEX Average	26,473	0.36	$ 51,755	$ 0.71	$ 9,673	5.35
XFX Average	43,061	0.61	$ 84,179	$ 1.19	$ 8,694	9.68
ALL Average	33,135	0.46	$ 72,075	$ 1.00	$ 8,890	8.11

CTZ13 Fresno - Mechanical Subcooling						
	Energy Savings (kWh)	Energy Savings/ SF (kWh)	TDV Cost Savings ($)	TDV Cost Savings /SF ($)	Measure Cost ($)	Benefit/ Cost Ratio
SAC	8,311	0.52	$ 18,627	$ 1.18	$ 4,645	4.01
SAD	7,562	0.48	$ 21,706	$ 1.37	$ 4,220	5.14
SEC	7,222	0.46	$ 13,901	$ 0.88	$ 4,645	2.99
SFC	11,149	0.70	$ 21,430	$ 1.35	$ 4,645	4.61
SFD	12,752	0.80	$ 24,875	$ 1.57	$ 4,220	5.89
MAC	22,839	0.38	$ 49,589	$ 0.83	$ 8,582	5.78
MAD	23,817	0.40	$ 68,964	$ 1.16	$ 7,059	9.77
MEC	18,827	0.32	$ 37,441	$ 0.63	$ 8,582	4.36
MFC	31,682	0.53	$ 63,259	$ 1.06	$ 8,582	7.37
MFD	39,135	0.66	$ 81,681	$ 1.37	$ 7,059	11.57
LAC	80,713	0.50	$ 194,956	$ 1.20	$ 15,793	12.34
LAD	45,479	0.28	$ 137,411	$ 0.85	$ 11,863	11.58
LEC	55,170	0.34	$ 108,087	$ 0.67	$ 15,793	6.84
LFC	92,151	0.57	$ 179,337	$ 1.11	$ 15,793	11.36
LFD	76,322	0.47	$ 148,162	$ 0.91	$ 11,863	12.49
SXX Average	9,399	0.59	$ 20,108	$ 1.27	$ 4,475	4.49
MXX Average	27,260	0.46	$ 60,187	$ 1.01	$ 7,973	7.55
LXX Average	69,967	0.43	$ 153,591	$ 0.95	$ 14,221	10.80
XAX Average	31,454	0.43	$ 81,876	$ 1.10	$ 8,694	9.42
XEX Average	27,073	0.37	$ 53,143	$ 0.72	$ 9,673	5.49

XFX Average	43,865	0.62	$ 86,457	$ 1.23	$ 8,694	9.94
ALL Average	35,542	0.49	$ 77,962	$ 1.08	$ 8,890	8.77

CTZ14 Palmdale - Mechanical Subcooling						
	Energy Savings (kWh)	Energy Savings/ SF (kWh)	TDV Cost Savings ($)	TDV Cost Savings /SF ($)	Measure Cost ($)	Benefit/ Cost Ratio
SAC	8,239	0.52	$ 18,253	$ 1.15	$ 4,645	3.93
SAD	7,700	0.49	$ 21,422	$ 1.35	$ 4,220	5.08
SEC	7,050	0.44	$ 13,412	$ 0.85	$ 4,645	2.89
SFC	10,975	0.69	$ 20,710	$ 1.31	$ 4,645	4.46
SFD	12,378	0.78	$ 23,718	$ 1.50	$ 4,220	5.62
MAC	22,421	0.38	$ 47,907	$ 0.80	$ 8,582	5.58
MAD	23,996	0.40	$ 67,682	$ 1.14	$ 7,059	9.59
MEC	17,982	0.30	$ 35,278	$ 0.59	$ 8,582	4.11
MFC	30,875	0.52	$ 59,761	$ 1.00	$ 8,582	6.96
MFD	36,629	0.62	$ 73,538	$ 1.23	$ 7,059	10.42
LAC	80,738	0.50	$ 192,571	$ 1.19	$ 15,793	12.19
LAD	45,738	0.28	$ 133,718	$ 0.82	$ 11,863	11.27
LEC	53,985	0.33	$ 104,500	$ 0.64	$ 15,793	6.62
LFC	90,286	0.56	$ 173,998	$ 1.07	$ 15,793	11.02
LFD	74,860	0.46	$ 144,059	$ 0.89	$ 11,863	12.14
SXX Average	9,268	0.58	$ 19,503	$ 1.23	$ 4,475	4.36
MXX Average	26,381	0.44	$ 56,833	$ 0.95	$ 7,973	7.13
LXX Average	69,121	0.43	$ 149,769	$ 0.92	$ 14,221	10.53
XAX Average	31,472	0.43	$ 80,259	$ 1.08	$ 8,694	9.23
XEX Average	26,339	0.36	$ 51,063	$ 0.69	$ 9,673	5.28
XFX Average	42,667	0.60	$ 82,631	$ 1.17	$ 8,694	9.50
ALL Average	34,923	0.48	$ 75,368	$ 1.04	$ 8,890	8.48

CTZ15 Palm Springs - Mechanical Subcooling						
	Energy Savings (kWh)	Energy Savings/ SF (kWh)	TDV Cost Savings ($)	TDV Cost Savings /SF ($)	Measure Cost ($)	Benefit/ Cost Ratio
SAC	11,443	0.72	$ 26,227	$ 1.65	$ 4,645	5.65
SAD	13,824	0.87	$ 37,103	$ 2.34	$ 4,220	8.79
SEC	7,653	0.48	$ 15,121	$ 0.95	$ 4,645	3.26
SFC	11,638	0.73	$ 22,837	$ 1.44	$ 4,645	4.92
SFD	13,595	0.86	$ 27,358	$ 1.73	$ 4,220	6.48
MAC	28,508	0.48	$ 66,570	$ 1.12	$ 8,582	7.76
MAD	45,203	0.76	$ 121,748	$ 2.04	$ 7,059	17.25
MEC	20,984	0.35	$ 42,416	$ 0.71	$ 8,582	4.94
MFC	34,858	0.59	$ 71,687	$ 1.20	$ 8,582	8.35
MFD	46,162	0.78	$ 100,424	$ 1.69	$ 7,059	14.23
LAC	114,292	0.71	$ 259,844	$ 1.60	$ 15,793	16.45
LAD	88,620	0.55	$ 247,358	$ 1.53	$ 11,863	20.85
LEC	59,231	0.37	$ 117,974	$ 0.73	$ 15,793	7.47
LFC	98,320	0.61	$ 193,363	$ 1.19	$ 15,793	12.24
LFD	81,968	0.51	$ 165,036	$ 1.02	$ 11,863	13.91
SXX Average	11,631	0.73	$ 25,729	$ 1.62	$ 4,475	5.75
MXX Average	35,143	0.59	$ 80,569	$ 1.35	$ 7,973	10.11
LXX Average	88,486	0.55	$ 196,715	$ 1.21	$ 14,221	13.83
XAX Average	50,315	0.68	$ 126,475	$ 1.71	$ 8,694	14.55
XEX Average	29,289	0.40	$ 58,504	$ 0.80	$ 9,673	6.05

XFX Average	47,757	0.68	$ 96,784	$ 1.38	$ 8,694	11.13
ALL Average	45,087	0.62	$ 101,004	$ 1.40	$ 8,890	11.36

15.5 Walk-In Variable Speed Fan Control

CTZ01 Arcata - Walk-in Variable Speed Fan Control						
	Energy Savings (kWh)	Energy Savings/ SF (kWh)	TDV Cost Savings ($)	TDV Cost Savings /SF ($)	Measure Cost ($)	Benefit/ Cost Ratio
SAC	3,839	0.24	$ 9,084	$ 0.57	$ 5,377	1.69
SAD	3,910	0.25	$ 9,363	$ 0.59	$ 5,377	1.74
SEC	3,763	0.24	$ 8,917	$ 0.56	$ 5,377	1.66
SFC	3,981	0.25	$ 9,485	$ 0.60	$ 5,377	1.76
SFD	3,943	0.25	$ 9,318	$ 0.59	$ 5,377	1.73
MAC	25,558	0.43	$ 60,367	$ 1.01	$ 15,529	3.89
MAD	25,591	0.43	$ 60,379	$ 1.01	$ 15,529	3.89
MEC	26,210	0.44	$ 62,810	$ 1.05	$ 15,529	4.04
MFC	27,819	0.47	$ 66,044	$ 1.11	$ 15,529	4.25
MFD	27,820	0.47	$ 66,077	$ 1.11	$ 15,529	4.26
LAC	137,283	0.85	$ 326,735	$ 2.02	$ 23,667	13.81
LAD	136,775	0.84	$ 325,107	$ 2.01	$ 23,667	13.74
LEC	135,286	0.83	$ 321,472	$ 1.98	$ 23,667	13.58
LFC	142,852	0.88	$ 340,585	$ 2.10	$ 23,667	14.39
LFD	144,594	0.89	$ 342,927	$ 2.12	$ 23,667	14.49
SXX Average	3,887	0.25	$ 9,233	$ 0.58	$ 5,377	1.72
MXX Average	26,600	0.45	$ 63,135	$ 1.06	$ 15,529	4.07
LXX Average	139,358	0.86	$ 331,365	$ 2.04	$ 23,667	14.00
XAX Average	55,493	0.51	$ 131,839	$ 1.20	$ 14,858	8.87
XEX Average	55,086	0.50	$ 131,066	$ 1.20	$ 14,858	8.82
XFX Average	58,502	0.53	$ 139,073	$ 1.27	$ 14,858	9.36
ALL Average	56,615	0.52	$ 134,578	$ 1.23	$ 14,858	9.06

CTZ03 Oakland - Walk-in Variable Speed Fan Control						
	Energy Savings (kWh)	Energy Savings/ SF (kWh)	TDV Cost Savings ($)	TDV Cost Savings /SF ($)	Measure Cost ($)	Benefit/ Cost Ratio
SAC	3,852	0.24	$ 9,116	$ 0.58	$ 5,377	1.70
SAD	3,908	0.25	$ 9,250	$ 0.58	$ 5,377	1.72
SEC	3,800	0.24	$ 9,015	$ 0.57	$ 5,377	1.68
SFC	4,031	0.25	$ 9,596	$ 0.61	$ 5,377	1.78
SFD	3,991	0.25	$ 9,405	$ 0.59	$ 5,377	1.75
MAC	25,688	0.43	$ 60,923	$ 1.02	$ 15,529	3.92
MAD	25,591	0.43	$ 60,577	$ 1.02	$ 15,529	3.90
MEC	26,559	0.45	$ 63,154	$ 1.06	$ 15,529	4.07
MFC	28,256	0.47	$ 66,979	$ 1.12	$ 15,529	4.31
MFD	28,152	0.47	$ 66,912	$ 1.12	$ 15,529	4.31
LAC	138,944	0.86	$ 333,810	$ 2.06	$ 23,667	14.10
LAD	137,921	0.85	$ 327,499	$ 2.02	$ 23,667	13.84
LEC	136,815	0.84	$ 329,773	$ 2.03	$ 23,667	13.93
LFC	144,620	0.89	$ 347,581	$ 2.14	$ 23,667	14.69
LFD	145,599	0.90	$ 347,816	$ 2.15	$ 23,667	14.70
SXX Average	3,916	0.25	$ 9,276	$ 0.59	$ 5,377	1.73

MXX Average	26,849	0.45	$ 63,709	$ 1.07	$ 15,529	4.10
LXX Average	140,780	0.87	$ 337,296	$ 2.08	$ 23,667	14.25
XAX Average	55,984	0.51	$ 133,529	$ 1.21	$ 14,858	8.99
XEX Average	55,725	0.51	$ 133,980	$ 1.22	$ 14,858	9.02
XFX Average	59,108	0.54	$ 141,382	$ 1.29	$ 14,858	9.52
ALL Average	57,182	0.52	$ 136,760	$ 1.25	$ 14,858	9.20

CTZ05 Santa Maria - Walk-in Variable Speed Fan Control						
	Energy Savings (kWh)	Energy Savings/ SF (kWh)	TDV Cost Savings ($)	TDV Cost Savings /SF ($)	Measure Cost ($)	Benefit/ Cost Ratio
SAC	3,860	0.24	$ 9,174	$ 0.58	$ 5,377	1.71
SAD	3,929	0.25	$ 9,342	$ 0.59	$ 5,377	1.74
SEC	3,815	0.24	$ 9,107	$ 0.57	$ 5,377	1.69
SFC	4,039	0.25	$ 9,654	$ 0.61	$ 5,377	1.80
SFD	3,996	0.25	$ 9,475	$ 0.60	$ 5,377	1.76
MAC	25,654	0.43	$ 60,799	$ 1.02	$ 15,529	3.92
MAD	25,573	0.43	$ 60,554	$ 1.02	$ 15,529	3.90
MEC	26,421	0.44	$ 63,096	$ 1.06	$ 15,529	4.06
MFC	28,071	0.47	$ 66,664	$ 1.12	$ 15,529	4.29
MFD	27,978	0.47	$ 66,598	$ 1.12	$ 15,529	4.29
LAC	138,786	0.86	$ 333,564	$ 2.06	$ 23,667	14.09
LAD	137,654	0.85	$ 326,974	$ 2.02	$ 23,667	13.82
LEC	136,328	0.84	$ 328,178	$ 2.02	$ 23,667	13.87
LFC	144,501	0.89	$ 347,213	$ 2.14	$ 23,667	14.67
LFD	145,473	0.90	$ 348,462	$ 2.15	$ 23,667	14.72
SXX Average	3,928	0.25	$ 9,350	$ 0.59	$ 5,377	1.74
MXX Average	26,739	0.45	$ 63,542	$ 1.07	$ 15,529	4.09
LXX Average	140,548	0.87	$ 336,878	$ 2.08	$ 23,667	14.23
XAX Average	55,909	0.51	$ 133,401	$ 1.21	$ 14,858	8.98
XEX Average	55,521	0.51	$ 133,460	$ 1.22	$ 14,858	8.98
XFX Average	59,010	0.54	$ 141,344	$ 1.29	$ 14,858	9.51
ALL Average	57,072	0.52	$ 136,590	$ 1.24	$ 14,858	9.19

CTZ07 San Diego-Lindbergh - Walk-in Variable Speed Fan Control						
	Energy Savings (kWh)	Energy Savings/ SF (kWh)	TDV Cost Savings ($)	TDV Cost Savings /SF ($)	Measure Cost ($)	Benefit/ Cost Ratio
SAC	3,906	0.25	$ 9,416	$ 0.59	$ 5,377	1.75
SAD	3,938	0.25	$ 9,439	$ 0.60	$ 5,377	1.76
SEC	3,940	0.25	$ 9,450	$ 0.60	$ 5,377	1.76
SFC	4,145	0.26	$ 10,019	$ 0.63	$ 5,377	1.86
SFD	4,103	0.26	$ 9,862	$ 0.62	$ 5,377	1.83
MAC	25,737	0.43	$ 61,744	$ 1.04	$ 15,529	3.98
MAD	25,625	0.43	$ 61,265	$ 1.03	$ 15,529	3.95
MEC	27,269	0.46	$ 64,911	$ 1.09	$ 15,529	4.18
MFC	28,904	0.49	$ 69,662	$ 1.17	$ 15,529	4.49
MFD	28,928	0.49	$ 69,719	$ 1.17	$ 15,529	4.49
LAC	140,779	0.87	$ 342,288	$ 2.11	$ 23,667	14.46
LAD	138,487	0.85	$ 332,463	$ 2.05	$ 23,667	14.05
LEC	140,461	0.87	$ 341,305	$ 2.11	$ 23,667	14.42
LFC	148,179	0.91	$ 360,820	$ 2.23	$ 23,667	15.25
LFD	147,662	0.91	$ 358,423	$ 2.21	$ 23,667	15.14
SXX Average	4,006	0.25	$ 9,637	$ 0.61	$ 5,377	1.79
MXX Average	27,293	0.46	$ 65,460	$ 1.10	$ 15,529	4.22
LXX Average	143,114	0.88	$ 347,060	$ 2.14	$ 23,667	14.66
XAX Average	56,412	0.51	$ 136,102	$ 1.24	$ 14,858	9.16
XEX Average	57,223	0.52	$ 138,555	$ 1.26	$ 14,858	9.33

XFX Average	60,320	0.55	$ 146,417	$ 1.34	$ 14,858	9.85
ALL Average	58,138	0.53	$ 140,719	$ 1.28	$ 14,858	9.47

CTZ08 Fullerton - Walk-in Variable Speed Fan Control						
	Energy Savings (kWh)	Energy Savings/ SF (kWh)	TDV Cost Savings ($)	TDV Cost Savings /SF ($)	Measure Cost ($)	Benefit/ Cost Ratio
SAC	3,863	0.24	$ 9,387	$ 0.59	$ 5,377	1.75
SAD	3,884	0.25	$ 9,432	$ 0.60	$ 5,377	1.75
SEC	3,864	0.24	$ 9,209	$ 0.58	$ 5,377	1.71
SFC	4,067	0.26	$ 9,766	$ 0.62	$ 5,377	1.82
SFD	4,094	0.26	$ 9,778	$ 0.62	$ 5,377	1.82
MAC	25,299	0.42	$ 59,739	$ 1.00	$ 15,529	3.85
MAD	25,601	0.43	$ 60,530	$ 1.02	$ 15,529	3.90
MEC	26,817	0.45	$ 62,593	$ 1.05	$ 15,529	4.03
MFC	28,148	0.47	$ 66,708	$ 1.12	$ 15,529	4.30
MFD	28,071	0.47	$ 66,853	$ 1.12	$ 15,529	4.31
LAC	143,309	0.88	$ 345,038	$ 2.13	$ 23,667	14.58
LAD	139,227	0.86	$ 332,036	$ 2.05	$ 23,667	14.03
LEC	139,626	0.86	$ 333,318	$ 2.06	$ 23,667	14.08
LFC	147,270	0.91	$ 352,734	$ 2.18	$ 23,667	14.90
LFD	148,289	0.91	$ 353,492	$ 2.18	$ 23,667	14.94
SXX Average	3,954	0.25	$ 9,514	$ 0.60	$ 5,377	1.77
MXX Average	26,787	0.45	$ 63,284	$ 1.06	$ 15,529	4.08
LXX Average	143,544	0.89	$ 343,323	$ 2.12	$ 23,667	14.51
XAX Average	56,864	0.51	$ 136,027	$ 1.23	$ 14,858	9.16
XEX Average	56,769	0.52	$ 135,040	$ 1.23	$ 14,858	9.09
XFX Average	59,990	0.55	$ 143,222	$ 1.31	$ 14,858	9.64
ALL Average	58,095	0.53	$ 138,707	$ 1.26	$ 14,858	9.34

CTZ10 Riverside - Walk-in Variable Speed Fan Control						
	Energy Savings (kWh)	Energy Savings/ SF (kWh)	TDV Cost Savings ($)	TDV Cost Savings /SF ($)	Measure Cost ($)	Benefit/ Cost Ratio
SAC	3,912	0.25	$ 9,511	$ 0.60	$ 5,377	1.77
SAD	3,913	0.25	$ 9,433	$ 0.60	$ 5,377	1.75
SEC	3,895	0.25	$ 9,231	$ 0.58	$ 5,377	1.72
SFC	4,108	0.26	$ 9,812	$ 0.62	$ 5,377	1.82
SFD	4,132	0.26	$ 9,778	$ 0.62	$ 5,377	1.82
MAC	25,828	0.43	$ 61,221	$ 1.03	$ 15,529	3.94
MAD	25,666	0.43	$ 60,932	$ 1.02	$ 15,529	3.92
MEC	26,276	0.44	$ 60,977	$ 1.02	$ 15,529	3.93
MFC	27,797	0.47	$ 65,627	$ 1.10	$ 15,529	4.23
MFD	27,721	0.47	$ 65,638	$ 1.10	$ 15,529	4.23
LAC	145,074	0.89	$ 350,593	$ 2.16	$ 23,667	14.81
LAD	140,117	0.86	$ 338,394	$ 2.09	$ 23,667	14.30
LEC	139,204	0.86	$ 330,900	$ 2.04	$ 23,667	13.98
LFC	146,774	0.91	$ 351,095	$ 2.17	$ 23,667	14.83
LFD	148,165	0.91	$ 352,422	$ 2.17	$ 23,667	14.89
SXX Average	3,992	0.25	$ 9,553	$ 0.60	$ 5,377	1.78
MXX Average	26,658	0.45	$ 62,879	$ 1.06	$ 15,529	4.05
LXX Average	143,867	0.89	$ 344,681	$ 2.13	$ 23,667	14.56
XAX Average	57,418	0.52	$ 138,347	$ 1.25	$ 14,858	9.31
XEX Average	56,458	0.52	$ 133,703	$ 1.22	$ 14,858	9.00

XFX Average	59,783	0.55	$ 142,395	$ 1.30	$ 14,858	9.58
ALL Average	58,172	0.53	$ 139,038	$ 1.26	$ 14,858	9.36

CTZ12 Sacramento - Walk-in Variable Speed Fan Control						
	Energy Savings (kWh)	Energy Savings/ SF (kWh)	TDV Cost Savings ($)	TDV Cost Savings /SF ($)	Measure Cost ($)	Benefit/ Cost Ratio
SAC	3,863	0.24	$ 9,387	$ 0.59	$ 5,377	1.75
SAD	3,884	0.25	$ 9,432	$ 0.60	$ 5,377	1.75
SEC	3,864	0.24	$ 9,209	$ 0.58	$ 5,377	1.71
SFC	4,067	0.26	$ 9,766	$ 0.62	$ 5,377	1.82
SFD	4,094	0.26	$ 9,778	$ 0.62	$ 5,377	1.82
MAC	26,165	0.44	$ 62,612	$ 1.05	$ 15,529	4.03
MAD	25,631	0.43	$ 61,363	$ 1.03	$ 15,529	3.95
MEC	26,089	0.44	$ 61,318	$ 1.03	$ 15,529	3.95
MFC	27,751	0.47	$ 66,069	$ 1.11	$ 15,529	4.25
MFD	27,598	0.46	$ 65,846	$ 1.11	$ 15,529	4.24
LAC	143,591	0.89	$ 350,011	$ 2.16	$ 23,667	14.79
LAD	139,262	0.86	$ 338,547	$ 2.09	$ 23,667	14.30
LEC	138,955	0.86	$ 334,800	$ 2.07	$ 23,667	14.15
LFC	145,882	0.90	$ 351,695	$ 2.17	$ 23,667	14.86
LFD	147,599	0.91	$ 354,183	$ 2.18	$ 23,667	14.97
SXX Average	3,954	0.25	$ 9,514	$ 0.60	$ 5,377	1.77
MXX Average	26,647	0.45	$ 63,442	$ 1.07	$ 15,529	4.09
LXX Average	143,058	0.88	$ 345,847	$ 2.13	$ 23,667	14.61
XAX Average	57,066	0.52	$ 138,559	$ 1.25	$ 14,858	9.33
XEX Average	56,303	0.51	$ 135,109	$ 1.23	$ 14,858	9.09
XFX Average	59,499	0.54	$ 142,890	$ 1.30	$ 14,858	9.62
ALL Average	57,886	0.53	$ 139,601	$ 1.27	$ 14,858	9.40

CTZ13 Fresno - Walk-in Variable Speed Fan Control						
	Energy Savings (kWh)	Energy Savings/ SF (kWh)	TDV Cost Savings ($)	TDV Cost Savings /SF ($)	Measure Cost ($)	Benefit/ Cost Ratio
SAC	3,941	0.25	$ 9,454	$ 0.60	$ 5,377	1.76
SAD	3,937	0.25	$ 9,577	$ 0.60	$ 5,377	1.78
SEC	3,902	0.25	$ 9,298	$ 0.59	$ 5,377	1.73
SFC	4,107	0.26	$ 9,868	$ 0.62	$ 5,377	1.84
SFD	4,132	0.26	$ 9,823	$ 0.62	$ 5,377	1.83
MAC	25,949	0.44	$ 61,846	$ 1.04	$ 15,529	3.98
MAD	25,680	0.43	$ 61,445	$ 1.03	$ 15,529	3.96
MEC	26,031	0.44	$ 60,932	$ 1.02	$ 15,529	3.92
MFC	27,539	0.46	$ 65,403	$ 1.10	$ 15,529	4.21
MFD	27,402	0.46	$ 65,247	$ 1.10	$ 15,529	4.20
LAC	146,020	0.90	$ 355,409	$ 2.19	$ 23,667	15.02
LAD	141,024	0.87	$ 343,265	$ 2.12	$ 23,667	14.50
LEC	139,596	0.86	$ 334,655	$ 2.06	$ 23,667	14.14
LFC	146,754	0.91	$ 353,903	$ 2.18	$ 23,667	14.95
LFD	148,117	0.91	$ 355,643	$ 2.19	$ 23,667	15.03
SXX Average	4,004	0.25	$ 9,604	$ 0.61	$ 5,377	1.79
MXX Average	26,520	0.45	$ 62,975	$ 1.06	$ 15,529	4.06
LXX Average	144,302	0.89	$ 348,575	$ 2.15	$ 23,667	14.73
XAX Average	57,759	0.52	$ 140,166	$ 1.26	$ 14,858	9.43
XEX Average	56,510	0.51	$ 134,962	$ 1.22	$ 14,858	9.08

XFX Average	59,675	0.54	$ 143,314	$ 1.30	$ 14,858	9.65
ALL Average	58,275	0.53	$ 140,384	$ 1.27	$ 14,858	9.45

CTZ14 Palmdale - Walk-in Variable Speed Fan Control						
	Energy Savings (kWh)	Energy Savings/ SF (kWh)	TDV Cost Savings ($)	TDV Cost Savings /SF ($)	Measure Cost ($)	Benefit/ Cost Ratio
SAC	3,930	0.25	$ 9,399	$ 0.59	$ 5,377	1.75
SAD	3,948	0.25	$ 9,500	$ 0.60	$ 5,377	1.77
SEC	3,862	0.24	$ 9,175	$ 0.58	$ 5,377	1.71
SFC	4,043	0.26	$ 9,621	$ 0.61	$ 5,377	1.79
SFD	4,043	0.26	$ 9,588	$ 0.60	$ 5,377	1.78
MAC	26,339	0.44	$ 61,955	$ 1.04	$ 15,529	3.99
MAD	25,649	0.43	$ 60,571	$ 1.02	$ 15,529	3.90
MEC	25,584	0.43	$ 59,781	$ 1.00	$ 15,529	3.85
MFC	27,055	0.45	$ 63,683	$ 1.07	$ 15,529	4.10
MFD	26,888	0.45	$ 63,448	$ 1.07	$ 15,529	4.09
LAC	145,990	0.90	$ 352,145	$ 2.17	$ 23,667	14.88
LAD	140,867	0.87	$ 339,790	$ 2.10	$ 23,667	14.36
LEC	138,206	0.85	$ 330,500	$ 2.04	$ 23,667	13.96
LFC	145,373	0.90	$ 347,663	$ 2.14	$ 23,667	14.69
LFD	147,167	0.91	$ 349,971	$ 2.16	$ 23,667	14.79
SXX Average	3,965	0.25	$ 9,457	$ 0.60	$ 5,377	1.76
MXX Average	26,303	0.44	$ 61,888	$ 1.04	$ 15,529	3.99
LXX Average	143,521	0.89	$ 344,014	$ 2.12	$ 23,667	14.54
XAX Average	57,787	0.52	$ 138,893	$ 1.25	$ 14,858	9.35
XEX Average	55,884	0.51	$ 133,152	$ 1.21	$ 14,858	8.96
XFX Average	59,095	0.54	$ 140,663	$ 1.27	$ 14,858	9.47
ALL Average	57,930	0.53	$ 138,453	$ 1.25	$ 14,858	9.32

CTZ15 Palm Springs - Walk-in Variable Speed Fan Control						
	Energy Savings (kWh)	Energy Savings/ SF (kWh)	TDV Cost Savings ($)	TDV Cost Savings /SF ($)	Measure Cost ($)	Benefit/ Cost Ratio
SAC	4,110	0.26	$ 9,947	$ 0.63	$ 5,377	1.85
SAD	4,131	0.26	$ 10,070	$ 0.64	$ 5,377	1.87
SEC	3,940	0.25	$ 9,344	$ 0.59	$ 5,377	1.74
SFC	4,154	0.26	$ 9,879	$ 0.62	$ 5,377	1.84
SFD	4,190	0.26	$ 10,013	$ 0.63	$ 5,377	1.86
MAC	25,759	0.43	$ 62,091	$ 1.04	$ 15,529	4.00
MAD	26,130	0.44	$ 63,262	$ 1.06	$ 15,529	4.07
MEC	25,584	0.43	$ 60,240	$ 1.01	$ 15,529	3.88
MFC	27,216	0.46	$ 64,522	$ 1.08	$ 15,529	4.15
MFD	27,159	0.46	$ 64,834	$ 1.09	$ 15,529	4.18
LAC	153,159	0.94	$ 369,171	$ 2.28	$ 23,667	15.60
LAD	147,205	0.91	$ 360,952	$ 2.23	$ 23,667	15.25
LEC	140,754	0.87	$ 334,189	$ 2.06	$ 23,667	14.12
LFC	149,227	0.92	$ 357,017	$ 2.20	$ 23,667	15.09
LFD	150,155	0.93	$ 359,649	$ 2.22	$ 23,667	15.20
SXX Average	4,105	0.26	$ 9,850	$ 0.62	$ 5,377	1.83
MXX Average	26,370	0.44	$ 62,990	$ 1.06	$ 15,529	4.06
LXX Average	148,100	0.91	$ 356,196	$ 2.20	$ 23,667	15.05
XAX Average	60,082	0.54	$ 145,915	$ 1.31	$ 14,858	9.82
XEX Average	56,759	0.52	$ 134,591	$ 1.22	$ 14,858	9.06

XFX Average	60,350	0.55	$ 144,319	$ 1.31	$ 14,858	9.71
ALL Average	59,525	0.54	$ 143,012	$ 1.29	$ 14,858	9.63

15.6 Display Case Lighting Control

CTZ01 Arcata - Display Case Lighting Control						
	Energy Savings (kWh)	Energy Savings/ SF (kWh)	TDV Cost Savings ($)	TDV Cost Savings /SF ($)	Measure Cost ($)	Benefit/ Cost Ratio
SAC	48,247	3.04	$ 67,201	$ 4.24	$ 5,588	12.03
SAD	48,173	3.04	$ 67,175	$ 4.24	$ 5,588	12.02
SEC	47,749	3.01	$ 66,463	$ 4.19	$ 5,588	11.89
SFC	49,505	3.12	$ 69,186	$ 4.37	$ 5,588	12.38
SFD	49,713	3.14	$ 69,471	$ 4.38	$ 5,588	12.43
MAC	145,011	2.43	$ 215,710	$ 3.62	$ 11,321	19.05
MAD	144,551	2.43	$ 214,998	$ 3.61	$ 11,321	18.99
MEC	143,703	2.41	$ 214,162	$ 3.60	$ 11,321	18.92
MFC	151,100	2.54	$ 225,625	$ 3.79	$ 11,321	19.93
MFD	151,691	2.55	$ 226,524	$ 3.80	$ 11,321	20.01
LAC	166,882	1.03	$ 255,305	$ 1.57	$ 12,659	20.17
LAD	165,787	1.02	$ 253,151	$ 1.56	$ 12,659	20.00
LEC	164,603	1.02	$ 251,576	$ 1.55	$ 12,659	19.87
LFC	173,941	1.07	$ 266,892	$ 1.65	$ 12,659	21.08
LFD	175,738	1.08	$ 270,025	$ 1.67	$ 12,659	21.33
SXX Average	48,677	3.07	$ 67,899	$ 4.28	$ 5,588	12.15
MXX Average	147,211	2.47	$ 219,404	$ 3.68	$ 11,321	19.38
LXX Average	169,390	1.04	$ 259,390	$ 1.60	$ 12,659	20.49
XAX Average	119,775	2.17	$ 178,924	$ 3.14	$ 9,856	18.15
XEX Average	118,685	2.15	$ 177,400	$ 3.11	$ 9,856	18.00
XFX Average	125,281	2.25	$ 187,954	$ 3.28	$ 9,856	19.07
ALL Average	121,760	2.20	$ 182,231	$ 3.19	$ 9,856	18.49

CTZ03 Oakland - Display Case Lighting Control						
	Energy Savings (kWh)	Energy Savings/ SF (kWh)	TDV Cost Savings ($)	TDV Cost Savings /SF ($)	Measure Cost ($)	Benefit/ Cost Ratio
SAC	48,478	3.06	$ 67,148	$ 4.24	$ 5,588	12.02
SAD	48,387	3.05	$ 66,997	$ 4.23	$ 5,588	11.99
SEC	47,903	3.02	$ 66,267	$ 4.18	$ 5,588	11.86
SFC	49,770	3.14	$ 69,142	$ 4.36	$ 5,588	12.37
SFD	50,005	3.16	$ 69,435	$ 4.38	$ 5,588	12.42
MAC	144,766	2.43	$ 210,976	$ 3.54	$ 11,321	18.64
MAD	144,416	2.42	$ 210,335	$ 3.53	$ 11,321	18.58
MEC	145,146	2.44	$ 211,901	$ 3.56	$ 11,321	18.72
MFC	153,060	2.57	$ 224,121	$ 3.76	$ 11,321	19.80
MFD	154,059	2.59	$ 225,607	$ 3.79	$ 11,321	19.93
LAC	168,325	1.04	$ 256,756	$ 1.58	$ 12,659	20.28
LAD	167,104	1.03	$ 253,561	$ 1.56	$ 12,659	20.03
LEC	165,697	1.02	$ 252,724	$ 1.56	$ 12,659	19.96
LFC	174,575	1.08	$ 267,106	$ 1.65	$ 12,659	21.10
LFD	176,197	1.09	$ 269,740	$ 1.66	$ 12,659	21.31
SXX Average	48,909	3.09	$ 67,798	$ 4.28	$ 5,588	12.13
MXX Average	148,289	2.49	$ 216,588	$ 3.64	$ 11,321	19.13

LXX Average	170,380	1.05	$ 259,977	$ 1.60	$ 12,659	20.54
XAX Average	120,246	2.17	$ 177,629	$ 3.11	$ 9,856	18.02
XEX Average	119,582	2.16	$ 176,964	$ 3.10	$ 9,856	17.95
XFX Average	126,278	2.27	$ 187,525	$ 3.27	$ 9,856	19.03
ALL Average	122,526	2.21	$ 181,454	$ 3.17	$ 9,856	18.41

CTZ05 Santa Maria - Display Case Lighting Control						
	Energy Savings (kWh)	Energy Savings/ SF (kWh)	TDV Cost Savings ($)	TDV Cost Savings /SF ($)	Measure Cost ($)	Benefit/ Cost Ratio
SAC	48,363	3.05	$ 67,371	$ 4.25	$ 5,588	12.06
SAD	48,282	3.05	$ 67,237	$ 4.24	$ 5,588	12.03
SEC	47,855	3.02	$ 66,632	$ 4.20	$ 5,588	11.92
SFC	49,597	3.13	$ 69,320	$ 4.37	$ 5,588	12.40
SFD	49,808	3.14	$ 69,604	$ 4.39	$ 5,588	12.46
MAC	144,566	2.43	$ 212,293	$ 3.56	$ 11,321	18.75
MAD	144,238	2.42	$ 211,661	$ 3.55	$ 11,321	18.70
MEC	143,824	2.41	$ 211,528	$ 3.55	$ 11,321	18.68
MFC	151,503	2.54	$ 223,515	$ 3.75	$ 11,321	19.74
MFD	152,336	2.56	$ 224,735	$ 3.77	$ 11,321	19.85
LAC	167,808	1.04	$ 259,328	$ 1.60	$ 12,659	20.49
LAD	166,453	1.03	$ 255,172	$ 1.57	$ 12,659	20.16
LEC	165,249	1.02	$ 254,789	$ 1.57	$ 12,659	20.13
LFC	174,331	1.08	$ 269,438	$ 1.66	$ 12,659	21.28
LFD	176,028	1.09	$ 272,446	$ 1.68	$ 12,659	21.52
SXX Average	48,781	3.08	$ 68,033	$ 4.29	$ 5,588	12.17
MXX Average	147,293	2.47	$ 216,746	$ 3.64	$ 11,321	19.15
LXX Average	169,974	1.05	$ 262,234	$ 1.62	$ 12,659	20.72
XAX Average	119,952	2.17	$ 178,844	$ 3.13	$ 9,856	18.15
XEX Average	118,976	2.15	$ 177,649	$ 3.11	$ 9,856	18.02
XFX Average	125,601	2.26	$ 188,176	$ 3.27	$ 9,856	19.09

CTZ07 San Diego-Lindbergh - Display Case Lighting Control						
	Energy Savings (kWh)	Energy Savings/ SF (kWh)	TDV Cost Savings ($)	TDV Cost Savings /SF ($)	Measure Cost ($)	Benefit/ Cost Ratio
SAC	48,955	3.09	$ 68,688	$ 4.33	$ 5,588	12.29
SAD	48,854	3.08	$ 68,474	$ 4.32	$ 5,588	12.25
SEC	49,380	3.12	$ 69,311	$ 4.37	$ 5,588	12.40
SFC	51,078	3.22	$ 71,945	$ 4.54	$ 5,588	12.87
SFD	51,449	3.25	$ 72,506	$ 4.57	$ 5,588	12.97
MAC	145,539	2.44	$ 214,269	$ 3.60	$ 11,321	18.93
MAD	145,514	2.44	$ 213,984	$ 3.59	$ 11,321	18.90
MEC	150,777	2.53	$ 222,341	$ 3.73	$ 11,321	19.64
MFC	157,929	2.65	$ 233,990	$ 3.93	$ 11,321	20.67
MFD	159,203	2.67	$ 236,108	$ 3.96	$ 11,321	20.86
LAC	172,238	1.06	$ 269,714	$ 1.66	$ 12,659	21.31
LAD	170,384	1.05	$ 264,846	$ 1.63	$ 12,659	20.92
LEC	171,257	1.06	$ 268,138	$ 1.65	$ 12,659	21.18
LFC	178,842	1.10	$ 280,803	$ 1.73	$ 12,659	22.18
LFD	179,638	1.11	$ 282,111	$ 1.74	$ 12,659	22.29
SXX Average	49,943	3.15	$ 70,185	$ 4.43	$ 5,588	12.56
MXX Average	151,792	2.55	$ 224,138	$ 3.76	$ 11,321	19.80
LXX Average	174,472	1.08	$ 273,122	$ 1.68	$ 12,659	21.58
XAX Average	121,914	2.20	$ 183,329	$ 3.19	$ 9,856	18.60
XEX Average	123,805	2.23	$ 186,597	$ 3.25	$ 9,856	18.93
XFX Average	129,690	2.33	$ 196,244	$ 3.41	$ 9,856	19.91

ALL Average	125,402	2.26	$ 189,148	$ 3.29	$ 9,856	19.19

CTZ08 Fullerton - Display Case Lighting Control						
	Energy Savings (kWh)	Energy Savings/ SF (kWh)	TDV Cost Savings ($)	TDV Cost Savings /SF ($)	Measure Cost ($)	Benefit/ Cost Ratio
SAC	48,999	3.09	$ 68,127	$ 4.30	$ 5,588	12.19
SAD	48,730	3.07	$ 67,833	$ 4.28	$ 5,588	12.14
SEC	48,100	3.03	$ 66,854	$ 4.22	$ 5,588	11.96
SFC	50,099	3.16	$ 69,889	$ 4.41	$ 5,588	12.51
SFD	50,275	3.17	$ 70,147	$ 4.43	$ 5,588	12.55
MAC	147,978	2.48	$ 213,414	$ 3.58	$ 11,321	18.85
MAD	144,180	2.42	$ 207,541	$ 3.48	$ 11,321	18.33
MEC	150,085	2.52	$ 216,511	$ 3.64	$ 11,321	19.12
MFC	155,247	2.61	$ 224,806	$ 3.77	$ 11,321	19.86
MFD	155,247	2.61	$ 224,930	$ 3.78	$ 11,321	19.87
LAC	173,247	1.07	$ 266,723	$ 1.65	$ 12,659	21.07
LAD	169,911	1.05	$ 259,737	$ 1.60	$ 12,659	20.52
LEC	169,042	1.04	$ 258,918	$ 1.60	$ 12,659	20.45
LFC	177,900	1.10	$ 273,727	$ 1.69	$ 12,659	21.62
LFD	179,855	1.11	$ 277,181	$ 1.71	$ 12,659	21.90
SXX Average	49,241	3.11	$ 68,570	$ 4.33	$ 5,588	12.27
MXX Average	150,547	2.53	$ 217,441	$ 3.65	$ 11,321	19.21
LXX Average	173,991	1.07	$ 267,257	$ 1.65	$ 12,659	21.11
XAX Average	122,174	2.20	$ 180,563	$ 3.15	$ 9,856	18.32
XEX Average	122,409	2.20	$ 180,761	$ 3.15	$ 9,856	18.34
XFX Average	128,104	2.29	$ 190,113	$ 3.30	$ 9,856	19.29
ALL Average	124,593	2.24	$ 184,423	$ 3.21	$ 9,856	18.71

CTZ10 Riverside - Display Case Lighting Control						
	Energy Savings (kWh)	Energy Savings/ SF (kWh)	TDV Cost Savings ($)	TDV Cost Savings /SF ($)	Measure Cost ($)	Benefit/ Cost Ratio
SAC	49,356	3.11	$ 67,504	$ 4.26	$ 5,588	12.08
SAD	48,999	3.09	$ 67,041	$ 4.23	$ 5,588	12.00
SEC	48,665	3.07	$ 66,454	$ 4.19	$ 5,588	11.89
SFC	50,657	3.20	$ 69,462	$ 4.38	$ 5,588	12.43
SFD	50,892	3.21	$ 69,782	$ 4.40	$ 5,588	12.49
MAC	148,108	2.49	$ 211,706	$ 3.55	$ 11,321	18.70
MAD	144,322	2.42	$ 206,090	$ 3.46	$ 11,321	18.20
MEC	148,244	2.49	$ 211,768	$ 3.56	$ 11,321	18.71
MFC	154,181	2.59	$ 221,139	$ 3.71	$ 11,321	19.53
MFD	154,110	2.59	$ 221,113	$ 3.71	$ 11,321	19.53
LAC	174,292	1.08	$ 264,961	$ 1.63	$ 12,659	20.93
LAD	170,295	1.05	$ 257,753	$ 1.59	$ 12,659	20.36
LEC	168,943	1.04	$ 255,198	$ 1.57	$ 12,659	20.16
LFC	177,961	1.10	$ 270,070	$ 1.67	$ 12,659	21.33
LFD	179,916	1.11	$ 273,256	$ 1.69	$ 12,659	21.59
SXX Average	49,714	3.14	$ 68,049	$ 4.29	$ 5,588	12.18
MXX Average	149,793	2.52	$ 214,363	$ 3.60	$ 11,321	18.94
LXX Average	174,281	1.08	$ 264,247	$ 1.63	$ 12,659	20.87
XAX Average	122,562	2.21	$ 179,176	$ 3.12	$ 9,856	18.18
XEX Average	121,951	2.20	$ 177,807	$ 3.11	$ 9,856	18.04

XFX Average	127,953	2.30	$ 187,470	$ 3.26	$ 9,856	19.02
ALL Average	124,596	2.24	$ 182,220	$ 3.17	$ 9,856	18.49

CTZ12 Sacramento - Display Case Lighting Control						
	Energy Savings (kWh)	Energy Savings/ SF (kWh)	TDV Cost Savings ($)	TDV Cost Savings /SF ($)	Measure Cost ($)	Benefit/ Cost Ratio
SAC	48,999	3.09	$ 68,127	$ 4.30	$ 5,588	12.19
SAD	48,730	3.07	$ 67,833	$ 4.28	$ 5,588	12.14
SEC	48,100	3.03	$ 66,854	$ 4.22	$ 5,588	11.96
SFC	50,099	3.16	$ 69,889	$ 4.41	$ 5,588	12.51
SFD	50,275	3.17	$ 70,147	$ 4.43	$ 5,588	12.55
MAC	147,757	2.48	$ 216,974	$ 3.64	$ 11,321	19.17
MAD	144,098	2.42	$ 211,269	$ 3.55	$ 11,321	18.66
MEC	145,982	2.45	$ 214,011	$ 3.59	$ 11,321	18.90
MFC	153,142	2.57	$ 225,100	$ 3.78	$ 11,321	19.88
MFD	152,738	2.56	$ 224,566	$ 3.77	$ 11,321	19.84
LAC	172,356	1.06	$ 265,753	$ 1.64	$ 12,659	20.99
LAD	168,605	1.04	$ 258,269	$ 1.59	$ 12,659	20.40
LEC	167,295	1.03	$ 256,418	$ 1.58	$ 12,659	20.26
LFC	176,435	1.09	$ 271,414	$ 1.67	$ 12,659	21.44
LFD	178,331	1.10	$ 274,724	$ 1.69	$ 12,659	21.70
SXX Average	49,241	3.11	$ 68,570	$ 4.33	$ 5,588	12.27
MXX Average	148,743	2.50	$ 218,384	$ 3.67	$ 11,321	19.29
LXX Average	172,604	1.06	$ 265,315	$ 1.64	$ 12,659	20.96
XAX Average	121,758	2.19	$ 181,371	$ 3.17	$ 9,856	18.40
XEX Average	120,459	2.17	$ 179,094	$ 3.13	$ 9,856	18.17
XFX Average	126,837	2.28	$ 189,307	$ 3.29	$ 9,856	19.21
ALL Average	123,529	2.22	$ 184,090	$ 3.21	$ 9,856	18.68

CTZ13 Fresno - Display Case Lighting Control						
	Energy Savings (kWh)	Energy Savings/ SF (kWh)	TDV Cost Savings ($)	TDV Cost Savings /SF ($)	Measure Cost ($)	Benefit/ Cost Ratio
SAC	50,266	3.17	$ 70,975	$ 4.48	$ 5,588	12.70
SAD	49,722	3.14	$ 70,218	$ 4.43	$ 5,588	12.57
SEC	49,331	3.11	$ 69,587	$ 4.39	$ 5,588	12.45
SFC	51,228	3.23	$ 72,479	$ 4.57	$ 5,588	12.97
SFD	51,454	3.25	$ 72,773	$ 4.59	$ 5,588	13.02
MAC	149,672	2.51	$ 220,045	$ 3.69	$ 11,321	19.44
MAD	145,866	2.45	$ 214,304	$ 3.60	$ 11,321	18.93
MEC	148,826	2.50	$ 218,532	$ 3.67	$ 11,321	19.30
MFC	154,841	2.60	$ 228,330	$ 3.83	$ 11,321	20.17
MFD	154,712	2.60	$ 228,188	$ 3.83	$ 11,321	20.16
LAC	175,674	1.08	$ 271,939	$ 1.68	$ 12,659	21.48
LAD	170,351	1.05	$ 262,104	$ 1.62	$ 12,659	20.71
LEC	168,948	1.04	$ 259,826	$ 1.60	$ 12,659	20.53
LFC	177,667	1.10	$ 274,422	$ 1.69	$ 12,659	21.68
LFD	179,425	1.11	$ 277,456	$ 1.71	$ 12,659	21.92
SXX Average	50,400	3.18	$ 71,206	$ 4.49	$ 5,588	12.74
MXX Average	150,783	2.53	$ 221,880	$ 3.73	$ 11,321	19.60
LXX Average	174,413	1.08	$ 269,149	$ 1.66	$ 12,659	21.26
XAX Average	123,592	2.23	$ 184,931	$ 3.25	$ 9,856	18.76
XEX Average	122,368	2.22	$ 182,648	$ 3.22	$ 9,856	18.53

XFX Average	128,221	2.31	$ 192,275	$ 3.37	$ 9,856	19.51
ALL Average	125,199	2.26	$ 187,412	$ 3.29	$ 9,856	19.01

CTZ14 Palmdale - Display Case Lighting Control						
	Energy Savings (kWh)	Energy Savings/ SF (kWh)	TDV Cost Savings ($)	TDV Cost Savings /SF ($)	Measure Cost ($)	Benefit/ Cost Ratio
SAC	50,243	3.17	$ 69,248	$ 4.37	$ 5,588	12.39
SAD	49,825	3.14	$ 68,679	$ 4.33	$ 5,588	12.29
SEC	48,640	3.07	$ 66,863	$ 4.22	$ 5,588	11.96
SFC	50,606	3.19	$ 69,747	$ 4.40	$ 5,588	12.48
SFD	50,755	3.20	$ 69,969	$ 4.41	$ 5,588	12.52
MAC	149,311	2.51	$ 215,693	$ 3.62	$ 11,321	19.05
MAD	145,589	2.44	$ 210,255	$ 3.53	$ 11,321	18.57
MEC	145,817	2.45	$ 210,460	$ 3.53	$ 11,321	18.59
MFC	152,370	2.56	$ 220,498	$ 3.70	$ 11,321	19.48
MFD	152,027	2.55	$ 220,009	$ 3.69	$ 11,321	19.43
LAC	175,750	1.08	$ 267,302	$ 1.65	$ 12,659	21.12
LAD	170,259	1.05	$ 257,388	$ 1.59	$ 12,659	20.33
LEC	167,262	1.03	$ 252,715	$ 1.56	$ 12,659	19.96
LFC	176,395	1.09	$ 267,275	$ 1.65	$ 12,659	21.11
LFD	178,341	1.10	$ 270,524	$ 1.67	$ 12,659	21.37
SXX Average	50,014	3.16	$ 68,901	$ 4.35	$ 5,588	12.33
MXX Average	149,023	2.50	$ 215,383	$ 3.62	$ 11,321	19.03
LXX Average	173,601	1.07	$ 263,041	$ 1.62	$ 12,659	20.78
XAX Average	123,496	2.23	$ 181,427	$ 3.18	$ 9,856	18.41
XEX Average	120,573	2.18	$ 176,679	$ 3.10	$ 9,856	17.93
XFX Average	126,749	2.28	$ 186,337	$ 3.25	$ 9,856	18.91
ALL Average	124,213	2.24	$ 182,442	$ 3.20	$ 9,856	18.51

CTZ15 Palm Springs - Display Case Lighting Control						
	Energy Savings (kWh)	Energy Savings/ SF (kWh)	TDV Cost Savings ($)	TDV Cost Savings /SF ($)	Measure Cost ($)	Benefit/ Cost Ratio
SAC	51,776	3.27	$ 72,755	$ 4.59	$ 5,588	13.02
SAD	51,071	3.22	$ 71,812	$ 4.53	$ 5,588	12.85
SEC	50,040	3.16	$ 70,094	$ 4.42	$ 5,588	12.54
SFC	51,759	3.27	$ 72,728	$ 4.59	$ 5,588	13.01
SFD	52,092	3.29	$ 73,262	$ 4.62	$ 5,588	13.11
MAC	153,301	2.57	$ 225,171	$ 3.78	$ 11,321	19.89
MAD	151,698	2.55	$ 223,035	$ 3.74	$ 11,321	19.70
MEC	151,568	2.54	$ 221,602	$ 3.72	$ 11,321	19.57
MFC	158,126	2.65	$ 232,255	$ 3.90	$ 11,321	20.52
MFD	158,632	2.66	$ 233,198	$ 3.92	$ 11,321	20.60
LAC	185,047	1.14	$ 285,101	$ 1.76	$ 12,659	22.52
LAD	176,034	1.09	$ 271,280	$ 1.67	$ 12,659	21.43
LEC	172,611	1.06	$ 264,276	$ 1.63	$ 12,659	20.88
LFC	181,127	1.12	$ 278,551	$ 1.72	$ 12,659	22.00
LFD	182,818	1.13	$ 281,702	$ 1.74	$ 12,659	22.25
SXX Average	51,348	3.24	$ 72,130	$ 4.55	$ 5,588	12.91
MXX Average	154,665	2.60	$ 227,052	$ 3.81	$ 11,321	20.06
LXX Average	179,527	1.11	$ 276,182	$ 1.70	$ 12,659	21.82
XAX Average	128,155	2.31	$ 191,526	$ 3.35	$ 9,856	19.43
XEX Average	124,740	2.26	$ 185,324	$ 3.26	$ 9,856	18.80

XFX Average	130,759	2.35	$ 195,283	$ 3.41	$ 9,856	19.81
ALL Average	128,513	2.31	$ 191,788	$ 3.36	$ 9,856	19.46

15.7 *Refrigeration Heat Recovery*

CTZ01 Arcata - Refrigeration Heat Recovery

	Energy Savings (kWh)	Energy Savings/ SF (kWh)	Natural Gas Savings (Therms)	Natural Gas Savings /SF (Therms)	TDV Electric Cost Savings ($)	TDV Gas Cost Savings ($)	TDV Total Cost Savings ($)	TDV Total Cost Savings /SF ($)	Measure Cost ($)	Benefit/ Cost Ratio
SAC	-26,406	-1.67	13,595	0.86	$ (59,035)	$ 276,545	$ 217,510	$ 13.72	$ 20,926	10.39
SAD	-30,552	-1.93	13,585	0.86	$ (69,082)	$ 276,313	$ 207,230	$ 13.08	$ 23,202	8.93
SEC	-17,954	-1.13	13,594	0.86	$ (38,918)	$ 276,521	$ 237,603	$ 14.99	$ 20,926	11.35
SFC	-7,248	-0.46	13,620	0.86	$ (14,898)	$ 277,059	$ 262,161	$ 16.54	$ 20,926	12.53
SFD	-8,995	-0.57	13,614	0.86	$ (18,165)	$ 276,937	$ 258,771	$ 16.33	$ 21,000	12.32
MAC	-88,277	-1.48	46,458	0.78	$ (194,546)	$ 939,757	$ 745,212	$ 12.51	$ 66,536	11.20
MAD	-106,993	-1.80	46,458	0.78	$ (237,768)	$ 939,757	$ 701,989	$ 11.79	$ 75,068	9.35
MEC	-45,675	-0.77	46,469	0.78	$ (93,102)	$ 939,990	$ 846,887	$ 14.22	$ 66,536	12.73
MFC	2,363	0.04	46,490	0.78	$ 13,393	$ 940,381	$ 953,774	$ 16.01	$ 66,536	14.33
MFD	84,118	1.41	46,501	0.78	$ 187,911	$ 940,626	$ 1,128,537	$ 18.95	$ 75,068	15.03
LAC	-147,172	-0.91	71,243	0.44	$ (338,018)	$ 1,441,831	$ 1,103,813	$ 6.81	$ 83,600	13.20
LAD	-150,070	-0.93	70,919	0.44	$ (346,337)	$ 1,435,236	$ 1,088,899	$ 6.72	$ 95,545	11.40
LEC	-120,903	-0.75	71,664	0.44	$ (270,062)	$ 1,450,116	$ 1,180,054	$ 7.28	$ 83,600	14.12
LFC	-66,500	-0.41	72,907	0.45	$ (146,283)	$ 1,475,434	$ 1,329,152	$ 8.20	$ 83,600	15.90
LFD	-70,730	-0.44	72,568	0.45	$ (153,698)	$ 1,468,386	$ 1,314,688	$ 8.11	$ 95,545	13.76
SXX Average	-18,231	-1.15	13,602	0.86	$ (40,020)	$ 276,675	$ 236,655	$ 14.93	$ 21,396	11.06
MXX Average	-30,893	-0.52	46,475	0.78	$ (64,822)	$ 940,102	$ 875,280	$ 14.70	$ 69,949	12.51
LXX Average	-111,075	-0.69	71,860	0.44	$ (250,880)	$ 1,454,201	$ 1,203,321	$ 7.42	$ 88,378	13.62
XAX Average	-91,578	-1.45	43,710	0.69	$ (207,464)	$ 884,907	$ 677,442	$ 10.77	$ 60,813	11.14
XEX Average	-61,511	-0.88	43,909	0.69	$ (134,027)	$ 888,875	$ 754,848	$ 12.16	$ 57,021	13.24
XFX Average	-11,165	-0.07	44,283	0.70	$ (21,957)	$ 896,471	$ 874,514	$ 14.02	$ 60,446	14.47
ALL Average	-53,400	-0.78	43,977	0.69	$ (118,574)	$ 890,326	$ 771,752	$ 12.35	$ 59,908	12.88

CTZ03 Oakland - Refrigeration Heat Recovery

	Energy Savings (kWh)	Energy Savings/ SF (kWh)	Natural Gas Savings (Therms)	Natural Gas Savings /SF (Therms)	TDV Electric Cost Savings ($)	TDV Gas Cost Savings ($)	TDV Total Cost Savings ($)	TDV Total Cost Savings /SF ($)	Measure Cost ($)	Benefit/ Cost Ratio
SAC	-23,189	-1.46	9,717	0.61	$ (49,601)	$ 201,483	$ 151,882	$ 9.58	$ 20,926	7.26
SAD	-27,151	-1.71	9,715	0.61	$ (57,641)	$ 201,446	$ 143,805	$ 9.07	$ 23,202	6.20
SEC	-16,067	-1.01	9,718	0.61	$ (34,859)	$ 201,508	$ 166,649	$ 10.51	$ 20,926	7.96

DRAFT

SFC	-6,729	-0.42	9,729	0.61	$ (15,857)	$ 201,740	$ 185,883	$ 11.73	$ 20,926	8.88
SFD	-7,571	-0.48	9,729	0.61	$ (17,251)	$ 201,728	$ 184,477	$ 11.64	$ 21,000	8.78
MAC	-73,900	-1.24	35,273	0.59	$ (154,245)	$ 722,500	$ 568,256	$ 9.54	$ 66,536	8.54
MAD	-90,381	-1.52	35,273	0.59	$ (187,253)	$ 722,500	$ 535,248	$ 8.99	$ 75,068	7.13
MEC	-36,652	-0.62	35,286	0.59	$ (76,721)	$ 722,745	$ 646,024	$ 10.85	$ 66,536	9.71
MFC	2,213	0.04	35,303	0.59	$ 3,769	$ 723,112	$ 726,881	$ 12.20	$ 66,536	10.92
MFD	62,652	1.05	35,311	0.59	$ 126,746	$ 723,284	$ 850,029	$ 14.27	$ 75,068	11.32
LAC	-135,990	-0.84	49,016	0.30	$ (291,974)	$ 1,019,800	$ 727,825	$ 4.49	$ 83,600	8.71
LAD	-139,432	-0.86	48,857	0.30	$ (298,018)	$ 1,016,324	$ 718,306	$ 4.43	$ 95,545	7.52
LEC	-109,720	-0.68	49,179	0.30	$ (236,932)	$ 1,023,300	$ 786,368	$ 4.85	$ 83,600	9.41
LFC	-60,881	-0.38	49,805	0.31	$ (137,953)	$ 1,037,103	$ 899,150	$ 5.55	$ 83,600	10.76
LFD	-62,703	-0.39	49,640	0.31	$ (140,138)	$ 1,033,456	$ 893,318	$ 5.51	$ 95,545	9.35
SXX Average	-16,141	-1.02	9,722	0.61	$ (35,042)	$ 201,581	$ 166,539	$ 10.51	$ 21,396	7.78
MXX Average	-27,214	-0.46	35,289	0.59	$ (57,541)	$ 722,828	$ 665,288	$ 11.17	$ 69,949	9.51
LXX Average	-101,745	-0.63	49,299	0.30	$ (221,003)	$ 1,025,997	$ 804,993	$ 4.97	$ 88,378	9.11
XAX Average	-81,674	-1.27	31,309	0.50	$ (173,122)	$ 647,342	$ 474,220	$ 7.68	$ 60,813	7.80
XEX Average	-54,146	-0.77	31,394	0.50	$ (116,171)	$ 649,184	$ 533,014	$ 8.74	$ 57,021	9.35
XFX Average	-12,170	-0.10	31,586	0.50	$ (30,114)	$ 653,404	$ 623,290	$ 10.15	$ 60,446	10.31
ALL Average	-48,367	-0.70	31,436	0.50	$ (104,529)	$ 650,135	$ 545,607	$ 8.88	$ 59,908	9.11

CTZ05 Santa Maria - Refrigeration Heat Recovery

	Energy Savings (kWh)	Energy Savings/ SF (kWh)	Natural Gas Savings (Therms)	Natural Gas Savings /SF (Therms)	TDV Electric Cost Savings ($)	TDV Gas Cost Savings ($)	TDV Total Cost Savings ($)	TDV Total Cost Savings /SF ($)	Measure Cost ($)	Benefit/ Cost Ratio
SAC	-23,293	-1.47	10,112	0.64	$ (50,058)	$ 207,565	$ 157,507	$ 9.94	$ 20,926	7.53
SAD	-27,154	-1.71	10,109	0.64	$ (58,187)	$ 207,504	$ 149,316	$ 9.42	$ 23,202	6.44
SEC	-16,804	-1.06	10,113	0.64	$ (36,465)	$ 207,577	$ 171,112	$ 10.80	$ 20,926	8.18
SFC	-7,228	-0.46	10,125	0.64	$ (16,604)	$ 207,810	$ 191,205	$ 12.06	$ 20,926	9.14
SFD	-8,304	-0.52	10,124	0.64	$ (18,433)	$ 207,785	$ 189,352	$ 11.95	$ 21,000	9.02
MAC	-74,595	-1.25	36,645	0.62	$ (155,326)	$ 745,163	$ 589,837	$ 9.90	$ 66,536	8.86
MAD	-90,885	-1.53	36,644	0.62	$ (188,591)	$ 745,163	$ 556,573	$ 9.35	$ 75,068	7.41
MEC	-39,874	-0.67	36,655	0.62	$ (81,639)	$ 745,371	$ 663,733	$ 11.14	$ 66,536	9.98
MFC	758	0.01	36,673	0.62	$ 3,535	$ 745,739	$ 749,274	$ 12.58	$ 66,536	11.26
MFD	68,507	1.15	36,682	0.62	$ 141,477	$ 745,922	$ 887,399	$ 14.90	$ 75,068	11.82
LAC	-135,427	-0.84	51,937	0.32	$ (294,060)	$ 1,064,269	$ 770,210	$ 4.75	$ 83,600	9.21
LAD	-138,730	-0.86	51,752	0.32	$ (300,182)	$ 1,060,280	$ 760,098	$ 4.69	$ 95,545	7.96
LEC	-113,666	-0.70	52,099	0.32	$ (246,622)	$ 1,067,671	$ 821,049	$ 5.06	$ 83,600	9.82
LFC	-64,295	-0.40	52,769	0.33	$ (144,733)	$ 1,081,891	$ 937,158	$ 5.78	$ 83,600	11.21
LFD	-66,498	-0.41	52,590	0.32	$ (147,599)	$ 1,078,011	$ 930,413	$ 5.74	$ 95,545	9.74
SXX Average	-16,557	-1.04	10,117	0.64	$ (35,950)	$ 207,648	$ 171,699	$ 10.83	$ 21,396	8.02
MXX Average	-27,218	-0.46	36,660	0.62	$ (56,109)	$ 745,472	$ 689,363	$ 11.57	$ 69,949	9.86
LXX Average	-103,723	-0.64	52,229	0.32	$ (226,639)	$ 1,070,424	$ 843,785	$ 5.20	$ 88,378	9.55
XAX Average	-81,681	-1.28	32,867	0.52	$ (174,401)	$ 671,657	$ 497,257	$ 8.01	$ 60,813	8.18
XEX Average	-56,781	-0.81	32,956	0.52	$ (121,575)	$ 673,540	$ 551,965	$ 9.00	$ 57,021	9.68
XFX Average	-12,843	-0.10	33,161	0.53	$ (30,393)	$ 677,860	$ 647,467	$ 10.50	$ 60,446	10.71
ALL Average	-49,166	-0.71	33,001	0.53	$ (106,232)	$ 674,515	$ 568,282	$ 9.20	$ 59,908	9.49

CTZ07 San Diego-Lindbergh - Refrigeration Heat Recovery

	Energy Savings (kWh)	Energy Savings/ SF (kWh)	Natural Gas Savings (Therms)	Natural Gas Savings /SF (Therms)	TDV Electric Cost Savings ($)	TDV Gas Cost Savings ($)	TDV Total Cost Savings ($)	TDV Total Cost Savings /SF ($)	Measure Cost ($)	Benefit/ Cost Ratio
SAC	-18,715	-1.18	6,247	0.39	$ (40,334)	$ 130,863	$ 90,529	$ 5.71	$ 20,926	4.33
SAD	-22,332	-1.41	6,247	0.39	$ (47,739)	$ 130,875	$ 83,137	$ 5.25	$ 23,202	3.58
SEC	-12,663	-0.80	6,249	0.39	$ (27,834)	$ 130,912	$ 103,078	$ 6.50	$ 20,926	4.93
SFC	-6,175	-0.39	6,253	0.39	$ (13,906)	$ 130,985	$ 117,080	$ 7.39	$ 20,926	5.59
SFD	-6,118	-0.39	6,252	0.39	$ (13,493)	$ 130,985	$ 117,492	$ 7.41	$ 21,000	5.59

MAC	-55,969	-0.94	23,840	0.40	$ (120,512)	$ 496,470	$ 375,958	$ 6.31	$ 66,536	5.65
MAD	-69,373	-1.16	23,840	0.40	$ (146,316)	$ 496,457	$ 350,141	$ 5.88	$ 75,068	4.66
MEC	-25,782	-0.43	23,854	0.40	$ (58,533)	$ 496,739	$ 438,206	$ 7.36	$ 66,536	6.59
MFC	785	0.01	23,868	0.40	$ (647)	$ 497,033	$ 496,386	$ 8.33	$ 66,536	7.46
MFD	34,852	0.59	23,871	0.40	$ 71,569	$ 497,106	$ 568,675	$ 9.55	$ 75,068	7.58
LAC	-116,133	-0.72	22,962	0.14	$ (251,049)	$ 498,269	$ 247,219	$ 1.52	$ 83,600	2.96
LAD	-118,808	-0.73	22,942	0.14	$ (254,238)	$ 497,804	$ 243,565	$ 1.50	$ 95,545	2.55
LEC	-89,692	-0.55	22,973	0.14	$ (198,081)	$ 498,501	$ 300,421	$ 1.85	$ 83,600	3.59
LFC	-57,760	-0.36	23,027	0.14	$ (134,295)	$ 499,725	$ 365,430	$ 2.25	$ 83,600	4.37
LFD	-56,745	-0.35	23,012	0.14	$ (130,860)	$ 499,382	$ 368,522	$ 2.27	$ 95,545	3.86
SXX Average	-13,201	-0.83	6,250	0.39	$ (28,661)	$ 130,924	$ 102,263	$ 6.45	$ 21,396	4.78
MXX Average	-23,097	-0.39	23,855	0.40	$ (50,888)	$ 496,761	$ 445,873	$ 7.49	$ 69,949	6.37
LXX Average	-87,828	-0.54	22,983	0.14	$ (193,705)	$ 498,736	$ 305,031	$ 1.88	$ 88,378	3.45
XAX Average	-66,888	-1.02	17,680	0.31	$ (143,365)	$ 375,123	$ 231,758	$ 4.36	$ 60,813	3.81
XEX Average	-42,712	-0.60	17,692	0.31	$ (94,816)	$ 375,384	$ 280,568	$ 5.24	$ 57,021	4.92
XFX Average	-15,194	-0.15	17,714	0.31	$ (36,939)	$ 375,869	$ 338,931	$ 6.20	$ 60,446	5.61
ALL Average	-41,375	-0.59	17,696	0.31	$ (91,085)	$ 375,474	$ 284,389	$ 5.27	$ 59,908	4.75
CTZ08 Fullerton - Refrigeration Heat Recovery										

	Energy Savings (kWh)	Energy Savings/ SF (kWh)	Natural Gas Savings (Therms)	Natural Gas Savings /SF (Therms)	TDV Electric Cost Savings ($)	TDV Gas Cost Savings ($)	TDV Total Cost Savings ($)	TDV Total Cost Savings /SF ($)	Measure Cost ($)	Benefit/ Cost Ratio
SAC	-20,858	-1.32	7,543	0.48	$ (44,549)	$ 163,805	$ 119,256	$ 7.52	$ 20,926	5.70
SAD	-23,106	-1.46	7,541	0.48	$ (48,709)	$ 163,744	$ 115,035	$ 7.26	$ 23,202	4.96
SEC	-17,518	-1.11	7,544	0.48	$ (37,736)	$ 163,793	$ 126,057	$ 7.95	$ 20,926	6.02
SFC	-9,714	-0.61	7,553	0.48	$ (22,436)	$ 164,026	$ 141,589	$ 8.93	$ 20,926	6.77
SFD	-10,663	-0.67	7,552	0.48	$ (23,931)	$ 163,977	$ 140,046	$ 8.84	$ 21,000	6.67
MAC	-58,999	-0.99	20,787	0.35	$ (126,545)	$ 439,151	$ 312,606	$ 5.25	$ 66,536	4.70
MAD	-69,474	-1.17	20,787	0.35	$ (144,666)	$ 439,151	$ 294,486	$ 4.94	$ 75,068	3.92
MEC	-35,499	-0.60	20,792	0.35	$ (79,754)	$ 439,237	$ 359,483	$ 6.04	$ 66,536	5.40
MFC	-9,982	-0.17	20,809	0.35	$ (29,584)	$ 439,592	$ 410,007	$ 6.88	$ 66,536	6.16
MFD	-11,884	-0.20	20,809	0.35	$ (31,424)	$ 439,592	$ 408,168	$ 6.85	$ 75,068	5.44
LAC	-110,056	-0.68	21,570	0.13	$ (233,709)	$ 472,840	$ 239,131	$ 1.48	$ 83,600	2.86
LAD	-110,114	-0.68	21,536	0.13	$ (231,735)	$ 472,081	$ 240,346	$ 1.48	$ 95,545	2.52
LEC	-92,209	-0.57	21,577	0.13	$ (198,794)	$ 473,011	$ 274,217	$ 1.69	$ 83,600	3.28
LFC	-62,349	-0.38	21,657	0.13	$ (140,975)	$ 474,798	$ 333,823	$ 2.06	$ 83,600	3.99
LFD	-61,792	-0.38	21,640	0.13	$ (138,254)	$ 474,419	$ 336,165	$ 2.07	$ 95,545	3.52
SXX Average	-16,372	-1.03	7,547	0.48	$ (35,472)	$ 163,869	$ 128,397	$ 8.10	$ 21,396	6.00
MXX Average	-37,168	-0.62	20,797	0.35	$ (82,395)	$ 439,345	$ 356,950	$ 5.99	$ 69,949	5.10
LXX Average	-87,304	-0.54	21,596	0.13	$ (188,693)	$ 473,430	$ 284,736	$ 1.76	$ 88,378	3.22
XAX Average	-65,435	-1.05	16,627	0.32	$ (138,319)	$ 358,462	$ 220,143	$ 4.66	$ 60,813	3.62
XEX Average	-48,409	-0.76	16,638	0.32	$ (105,428)	$ 358,680	$ 253,252	$ 5.23	$ 57,021	4.44
XFX Average	-27,731	-0.40	16,670	0.32	$ (64,434)	$ 359,400	$ 294,966	$ 5.94	$ 60,446	4.88
ALL Average	-46,948	-0.73	16,646	0.32	$ (102,187)	$ 358,881	$ 256,694	$ 5.28	$ 59,908	4.28

CTZ10 Riverside - Refrigeration Heat Recovery

	Energy Savings (kWh)	Energy Savings/ SF (kWh)	Natural Gas Savings (Therms)	Natural Gas Savings /SF (Therms)	TDV Electric Cost Savings ($)	TDV Gas Cost Savings ($)	TDV Total Cost Savings ($)	TDV Total Cost Savings /SF ($)	Measure Cost ($)	Benefit/ Cost Ratio
SAC	-19,177	-1.21	5,343	0.34	$ (40,267)	$ 116,436	$ 76,168	$ 4.81	$ 20,926	3.64
SAD	-21,182	-1.34	5,342	0.34	$ (43,813)	$ 116,436	$ 72,622	$ 4.58	$ 23,202	3.13
SEC	-16,641	-1.05	5,342	0.34	$ (35,361)	$ 116,448	$ 81,087	$ 5.12	$ 20,926	3.87
SFC	-9,927	-0.63	5,348	0.34	$ (22,682)	$ 116,558	$ 93,876	$ 5.92	$ 20,926	4.49
SFD	-10,528	-0.66	5,348	0.34	$ (23,329)	$ 116,558	$ 93,229	$ 5.88	$ 21,000	4.44
MAC	-61,925	-1.04	20,368	0.34	$ (129,734)	$ 437,866	$ 308,132	$ 5.17	$ 66,536	4.63
MAD	-71,575	-1.20	20,368	0.34	$ (146,428)	$ 437,866	$ 291,439	$ 4.89	$ 75,068	3.88

MEC	-44,385	-0.75	20,368	0.34	$ (95,533)	$ 437,879	$ 342,346	$ 5.75	$ 66,536	5.15
MFC	-16,675	-0.28	20,384	0.34	$ (42,854)	$ 438,197	$ 395,342	$ 6.64	$ 66,536	5.94
MFD	-20,538	-0.34	20,384	0.34	$ (48,040)	$ 438,197	$ 390,157	$ 6.55	$ 75,068	5.20
LAC	-109,129	-0.67	24,338	0.15	$ (229,215)	$ 536,583	$ 307,368	$ 1.90	$ 83,600	3.68
LAD	-108,758	-0.67	24,260	0.15	$ (227,453)	$ 534,796	$ 307,343	$ 1.90	$ 95,545	3.22
LEC	-99,078	-0.61	24,357	0.15	$ (210,202)	$ 536,987	$ 326,785	$ 2.02	$ 83,600	3.91
LFC	-69,051	-0.43	24,531	0.15	$ (152,929)	$ 540,890	$ 387,961	$ 2.39	$ 83,600	4.64
LFD	-69,445	-0.43	24,479	0.15	$ (152,026)	$ 539,715	$ 387,690	$ 2.39	$ 95,545	4.06
SXX Average	-15,491	-0.98	5,345	0.34	$ (33,090)	$ 116,487	$ 83,397	$ 5.26	$ 21,396	3.90
MXX Average	-43,020	-0.72	20,374	0.34	$ (92,518)	$ 438,001	$ 345,483	$ 5.80	$ 69,949	4.94
LXX Average	-91,092	-0.56	24,393	0.15	$ (194,365)	$ 537,794	$ 343,429	$ 2.12	$ 88,378	3.89
XAX Average	-65,291	-1.02	16,670	0.28	$ (136,152)	$ 363,331	$ 227,179	$ 3.87	$ 60,813	3.74
XEX Average	-53,368	-0.80	16,689	0.28	$ (113,699)	$ 363,771	$ 250,072	$ 4.29	$ 57,021	4.39
XFX Average	-32,694	-0.46	16,746	0.28	$ (73,643)	$ 365,019	$ 291,376	$ 4.96	$ 60,446	4.82
ALL Average	-49,868	-0.75	16,704	0.28	$ (106,658)	$ 364,094	$ 257,436	$ 4.39	$ 59,908	4.30

CTZ12 Sacramento - Refrigeration Heat Recovery

	Energy Savings (kWh)	Energy Savings/ SF (kWh)	Natural Gas Savings (Therms)	Natural Gas Savings /SF (Therms)	TDV Electric Cost Savings ($)	TDV Gas Cost Savings ($)	TDV Total Cost Savings ($)	TDV Total Cost Savings /SF ($)	Measure Cost ($)	Benefit/ Cost Ratio
SAC	-20,858	-1.32	7,543	0.48	$ (44,549)	$ 163,805	$ 119,256	$ 7.52	$ 20,926	5.70
SAD	-23,106	-1.46	7,541	0.48	$ (48,709)	$ 163,744	$ 115,035	$ 7.26	$ 23,202	4.96
SEC	-17,518	-1.11	7,544	0.48	$ (37,736)	$ 163,793	$ 126,057	$ 7.95	$ 20,926	6.02
SFC	-9,714	-0.61	7,553	0.48	$ (22,436)	$ 164,026	$ 141,589	$ 8.93	$ 20,926	6.77
SFD	-10,663	-0.67	7,552	0.48	$ (23,931)	$ 163,977	$ 140,046	$ 8.84	$ 21,000	6.67
MAC	-68,559	-1.15	27,063	0.45	$ (146,294)	$ 578,776	$ 432,482	$ 7.26	$ 66,536	6.50
MAD	-79,872	-1.34	27,063	0.45	$ (166,991)	$ 578,764	$ 411,773	$ 6.91	$ 75,068	5.49
MEC	-46,237	-0.78	27,065	0.45	$ (100,674)	$ 578,813	$ 478,139	$ 8.03	$ 66,536	7.19
MFC	-13,758	-0.23	27,081	0.45	$ (36,955)	$ 579,156	$ 542,200	$ 9.10	$ 66,536	8.15
MFD	-19,581	-0.33	27,081	0.45	$ (46,624)	$ 579,156	$ 532,532	$ 8.94	$ 75,068	7.09
LAC	-118,989	-0.73	36,483	0.23	$ (254,328)	$ 796,535	$ 542,207	$ 3.34	$ 83,600	6.49
LAD	-119,504	-0.74	36,297	0.22	$ (254,450)	$ 792,325	$ 537,875	$ 3.32	$ 95,545	5.63
LEC	-107,079	-0.66	36,537	0.23	$ (230,531)	$ 797,758	$ 567,228	$ 3.50	$ 83,600	6.79
LFC	-69,796	-0.43	37,042	0.23	$ (156,642)	$ 808,980	$ 652,337	$ 4.02	$ 83,600	7.80
LFD	-71,449	-0.44	36,917	0.23	$ (158,583)	$ 806,190	$ 647,607	$ 3.99	$ 95,545	6.78
SXX Average	-16,372	-1.03	7,547	0.48	$ (35,472)	$ 163,869	$ 128,397	$ 8.10	$ 21,396	6.00
MXX Average	-45,601	-0.77	27,071	0.45	$ (99,507)	$ 578,933	$ 479,425	$ 8.05	$ 69,949	6.85
LXX Average	-97,363	-0.60	36,655	0.23	$ (210,907)	$ 800,357	$ 589,451	$ 3.64	$ 88,378	6.67
XAX Average	-71,815	-1.12	23,665	0.38	$ (152,553)	$ 512,325	$ 359,771	$ 5.94	$ 60,813	5.92
XEX Average	-56,945	-0.85	23,715	0.39	$ (122,980)	$ 513,455	$ 390,475	$ 6.49	$ 57,021	6.85
XFX Average	-32,494	-0.45	23,871	0.39	$ (74,195)	$ 516,914	$ 442,719	$ 7.31	$ 60,446	7.32
ALL Average	-53,112	-0.80	23,756	0.39	$ (115,295)	$ 514,386	$ 399,091	$ 6.60	$ 59,908	6.66

CTZ13 Fresno - Refrigeration Heat Recovery

	Energy Savings (kWh)	Energy Savings/ SF (kWh)	Natural Gas Savings (Therms)	Natural Gas Savings /SF (Therms)	TDV Electric Cost Savings ($)	TDV Gas Cost Savings ($)	TDV Total Cost Savings ($)	TDV Total Cost Savings /SF ($)	Measure Cost ($)	Benefit/ Cost Ratio
SAC	-19,194	-1.21	6,448	0.41	$ (41,371)	$ 143,174	$ 101,802	$ 6.42	$ 20,926	4.86
SAD	-20,958	-1.32	6,446	0.41	$ (44,616)	$ 143,125	$ 98,508	$ 6.22	$ 23,202	4.25
SEC	-16,946	-1.07	6,448	0.41	$ (36,587)	$ 143,174	$ 106,586	$ 6.73	$ 20,926	5.09
SFC	-10,125	-0.64	6,456	0.41	$ (23,317)	$ 143,345	$ 120,028	$ 7.57	$ 20,926	5.74
SFD	-10,991	-0.69	6,455	0.41	$ (24,600)	$ 143,320	$ 118,721	$ 7.49	$ 21,000	5.65
MAC	-63,148	-1.06	22,549	0.38	$ (136,046)	$ 494,989	$ 358,943	$ 6.03	$ 66,536	5.39

MAD	-71,922	-1.21	22,549	0.38	$ (151,858)	$ 494,977	$ 343,118	$ 5.76	$ 75,068	4.57
MEC	-46,988	-0.79	22,550	0.38	$ (102,402)	$ 494,989	$ 392,587	$ 6.59	$ 66,536	5.90
MFC	-17,805	-0.30	22,564	0.38	$ (45,118)	$ 495,283	$ 450,165	$ 7.56	$ 66,536	6.77
MFD	-22,845	-0.38	22,564	0.38	$ (53,114)	$ 495,283	$ 442,169	$ 7.42	$ 75,068	5.89
LAC	-108,088	-0.67	30,743	0.19	$ (233,073)	$ 685,520	$ 452,447	$ 2.79	$ 83,600	5.41
LAD	-107,673	-0.66	30,585	0.19	$ (231,668)	$ 681,935	$ 450,266	$ 2.78	$ 95,545	4.71
LEC	-101,278	-0.62	30,798	0.19	$ (219,379)	$ 686,793	$ 467,413	$ 2.88	$ 83,600	5.59
LFC	-70,553	-0.44	31,178	0.19	$ (158,382)	$ 695,383	$ 537,001	$ 3.31	$ 83,600	6.42
LFD	-71,882	-0.44	31,080	0.19	$ (159,664)	$ 693,144	$ 533,479	$ 3.29	$ 95,545	5.58
SXX Average	-15,643	-0.99	6,451	0.41	$ (34,098)	$ 143,227	$ 109,129	$ 6.89	$ 21,396	5.10
MXX Average	-44,542	-0.75	22,555	0.38	$ (97,708)	$ 495,104	$ 397,396	$ 6.67	$ 69,949	5.68
LXX Average	-91,895	-0.57	30,877	0.19	$ (200,433)	$ 688,555	$ 488,121	$ 3.01	$ 88,378	5.52
XAX Average	-65,164	-1.02	19,887	0.32	$ (139,772)	$ 440,620	$ 300,848	$ 5.00	$ 60,813	4.95
XEX Average	-55,071	-0.83	19,932	0.33	$ (119,456)	$ 441,652	$ 322,195	$ 5.40	$ 57,021	5.65
XFX Average	-34,034	-0.48	20,050	0.33	$ (77,366)	$ 444,293	$ 366,927	$ 6.11	$ 60,446	6.07
ALL Average	-50,693	-0.77	19,960	0.33	$ (110,747)	$ 442,295	$ 331,549	$ 5.52	$ 59,908	5.53

CTZ14 Palmdale - Refrigeration Heat Recovery

	Energy Savings (kWh)	Energy Savings/ SF (kWh)	Natural Gas Savings (Therms)	Natural Gas Savings /SF (Therms)	TDV Electric Cost Savings ($)	TDV Gas Cost Savings ($)	TDV Total Cost Savings ($)	TDV Total Cost Savings /SF ($)	Measure Cost ($)	Benefit/ Cost Ratio
SAC	-18,973	-1.20	6,902	0.44	$ (40,122)	$ 153,257	$ 113,135	$ 7.14	$ 20,926	5.41
SAD	-20,755	-1.31	6,898	0.44	$ (43,323)	$ 153,159	$ 109,836	$ 6.93	$ 23,202	4.73
SEC	-19,280	-1.22	6,902	0.44	$ (40,568)	$ 153,232	$ 112,664	$ 7.11	$ 20,926	5.38
SFC	-12,960	-0.82	6,909	0.44	$ (28,492)	$ 153,404	$ 124,912	$ 7.88	$ 20,926	5.97
SFD	-14,521	-0.92	6,905	0.44	$ (31,134)	$ 153,318	$ 122,184	$ 7.71	$ 21,000	5.82
MAC	-62,289	-1.05	24,108	0.40	$ (131,496)	$ 529,571	$ 398,075	$ 6.68	$ 66,536	5.98
MAD	-71,102	-1.19	24,108	0.40	$ (146,896)	$ 529,571	$ 382,675	$ 6.43	$ 75,068	5.10
MEC	-59,519	-1.00	24,104	0.40	$ (125,486)	$ 529,522	$ 404,036	$ 6.78	$ 66,536	6.07
MFC	-28,747	-0.48	24,116	0.40	$ (66,071)	$ 529,742	$ 463,671	$ 7.79	$ 66,536	6.97
MFD	-36,869	-0.62	24,115	0.40	$ (79,765)	$ 529,742	$ 449,977	$ 7.56	$ 75,068	5.99
LAC	-108,263	-0.67	33,736	0.21	$ (229,471)	$ 751,184	$ 521,713	$ 3.22	$ 83,600	6.24
LAD	-108,129	-0.67	33,540	0.21	$ (228,356)	$ 746,718	$ 518,361	$ 3.20	$ 95,545	5.43
LEC	-109,532	-0.68	33,778	0.21	$ (231,891)	$ 752,139	$ 520,247	$ 3.21	$ 83,600	6.22
LFC	-85,136	-0.53	33,994	0.21	$ (184,665)	$ 756,899	$ 572,233	$ 3.53	$ 83,600	6.84
LFD	-87,121	-0.54	33,859	0.21	$ (187,130)	$ 753,791	$ 566,661	$ 3.50	$ 95,545	5.93
SXX Average	-17,298	-1.09	6,903	0.44	$ (36,728)	$ 153,274	$ 116,546	$ 7.35	$ 21,396	5.45
MXX Average	-51,705	-0.87	24,110	0.40	$ (109,943)	$ 529,630	$ 419,687	$ 7.05	$ 69,949	6.00
LXX Average	-99,636	-0.61	33,781	0.21	$ (212,303)	$ 752,146	$ 539,843	$ 3.33	$ 88,378	6.11
XAX Average	-64,919	-1.01	21,549	0.35	$ (136,611)	$ 477,243	$ 340,632	$ 5.60	$ 60,813	5.60
XEX Average	-62,777	-0.96	21,595	0.35	$ (132,648)	$ 478,298	$ 345,649	$ 5.70	$ 57,021	6.06
XFX Average	-44,226	-0.65	21,650	0.35	$ (96,210)	$ 479,483	$ 383,273	$ 6.33	$ 60,446	6.34
ALL Average	-56,213	-0.86	21,598	0.35	$ (119,658)	$ 478,350	$ 358,692	$ 5.91	$ 59,908	5.99

CTZ15 Palm Springs - Refrigeration Heat Recovery

	Energy Savings (kWh)	Energy Savings/ SF (kWh)	Natural Gas Savings (Therms)	Natural Gas Savings /SF (Therms)	TDV Electric Cost Savings ($)	TDV Gas Cost Savings ($)	TDV Total Cost Savings ($)	TDV Total Cost Savings /SF ($)	Measure Cost ($)	Benefit/ Cost Ratio
SAC	-14,987	-0.95	2,250	0.14	$ (32,539)	$ 51,689	$ 19,150	$ 1.21	$ 20,926	0.92
SAD	-15,793	-1.00	2,250	0.14	$ (33,933)	$ 51,689	$ 17,756	$ 1.12	$ 23,202	0.77
SEC	-15,409	-0.97	2,250	0.14	$ (33,220)	$ 51,677	$ 18,457	$ 1.16	$ 20,926	0.88
SFC	-10,655	-0.67	2,251	0.14	$ (24,154)	$ 51,726	$ 27,572	$ 1.74	$ 20,926	1.32
SFD	-10,901	-0.69	2,251	0.14	$ (24,265)	$ 51,726	$ 27,461	$ 1.73	$ 21,000	1.31
MAC	-48,067	-0.81	8,532	0.14	$ (105,335)	$ 194,802	$ 89,467	$ 1.50	$ 66,536	1.34

MAD	-51,536	-0.87	8,532	0.14	$ (110,844)	$ 194,802	$ 83,958	$ 1.41	$ 75,068	1.12
MEC	-47,445	-0.80	8,529	0.14	$ (102,926)	$ 194,728	$ 91,802	$ 1.54	$ 66,536	1.38
MFC	-25,995	-0.44	8,538	0.14	$ (61,800)	$ 194,949	$ 133,148	$ 2.24	$ 66,536	2.00
MFD	-26,917	-0.45	8,538	0.14	$ (61,455)	$ 194,949	$ 133,494	$ 2.24	$ 75,068	1.78
LAC	-83,699	-0.52	7,502	0.05	$ (181,108)	$ 172,848	$ (8,260)	$ (0.05)	$ 83,600	-0.10
LAD	-81,478	-0.50	7,499	0.05	$ (176,625)	$ 172,775	$ (3,850)	$ (0.02)	$ 95,545	-0.04
LEC	-81,558	-0.50	7,502	0.05	$ (177,216)	$ 172,848	$ (4,368)	$ (0.03)	$ 83,600	-0.05
LFC	-67,603	-0.42	7,507	0.05	$ (151,067)	$ 172,983	$ 21,916	$ 0.14	$ 83,600	0.26
LFD	-65,948	-0.41	7,506	0.05	$ (146,216)	$ 172,946	$ 26,731	$ 0.16	$ 95,545	0.28
SXX Average	-13,549	-0.85	2,250	0.14	$ (29,622)	$ 51,702	$ 22,079	$ 1.39	$ 21,396	1.03
MXX Average	-39,992	-0.67	8,534	0.14	$ (88,472)	$ 194,846	$ 106,374	$ 1.79	$ 69,949	1.52
LXX Average	-76,057	-0.47	7,503	0.05	$ (166,447)	$ 172,880	$ 6,434	$ 0.04	$ 88,378	0.07
XAX Average	-49,260	-0.77	6,094	0.11	$ (106,731)	$ 139,768	$ 33,037	$ 0.86	$ 60,813	0.54
XEX Average	-48,137	-0.76	6,094	0.11	$ (104,454)	$ 139,751	$ 35,297	$ 0.89	$ 57,021	0.62
XFX Average	-34,670	-0.51	6,099	0.11	$ (78,159)	$ 139,880	$ 61,720	$ 1.37	$ 60,446	1.02
ALL Average	-43,199	-0.67	6,096	0.11	$ (94,847)	$ 139,809	$ 44,962	$ 1.07	$ 59,908	0.75

15.8 Liquid-Suction Heat Exchangers

CTZ01 Arcata - Liquid-Suction Heat Exchangers						
	Energy Savings (kWh)	Energy Savings/ SF (kWh)	TDV Cost Savings ($)	TDV Cost Savings /SF ($)	Measure Cost ($)	Benefit/ Cost Ratio
SAC	8,966	0.57	$ 17,150	$ 1.08	$ 3,113	5.51
SAD	8,306	0.52	$ 16,002	$ 1.01	$ 3,113	5.14
SEC	10,295	0.65	$ 19,846	$ 1.25	$ 3,113	6.38
SFC	12,580	0.79	$ 24,430	$ 1.54	$ 3,113	7.85
SFD	11,524	0.73	$ 22,267	$ 1.40	$ 3,113	7.15
MAC	29,306	0.49	$ 56,050	$ 0.94	$ 11,821	4.74
MAD	27,663	0.46	$ 54,172	$ 0.91	$ 11,821	4.58
MEC	38,786	0.65	$ 75,985	$ 1.28	$ 11,821	6.43
MFC	50,129	0.84	$ 98,448	$ 1.65	$ 11,821	8.33
MFD	44,493	0.75	$ 87,404	$ 1.47	$ 11,821	7.39
LAC	52,384	0.32	$ 101,403	$ 0.63	$ 9,744	10.41
LAD	50,373	0.31	$ 96,686	$ 0.60	$ 9,744	9.92
LEC	58,416	0.36	$ 114,014	$ 0.70	$ 9,744	11.70
LFC	68,284	0.42	$ 133,967	$ 0.83	$ 9,744	13.75
LFD	64,119	0.40	$ 124,382	$ 0.77	$ 9,744	12.76
SXX Average	10,334	0.65	$ 19,939	$ 1.26	$ 3,113	6.41
MXX Average	38,075	0.64	$ 74,412	$ 1.25	$ 11,821	6.29
LXX Average	58,715	0.36	$ 114,090	$ 0.70	$ 9,744	11.71
XAX Average	29,500	0.45	$ 56,910	$ 0.86	$ 8,226	6.92
XEX Average	35,832	0.55	$ 69,949	$ 1.08	$ 8,226	8.50
XFX Average	41,855	0.65	$ 81,816	$ 1.28	$ 8,226	9.95
ALL Average	35,708	0.55	$ 69,480	$ 1.07	$ 8,226	8.45

CTZ03 Oakland - Liquid-Suction Heat Exchangers						
	Energy Savings (kWh)	Energy Savings/ SF (kWh)	TDV Cost Savings ($)	TDV Cost Savings /SF ($)	Measure Cost ($)	Benefit/ Cost Ratio
SAC	9,654	0.61	$ 19,633	$ 1.24	$ 3,113	6.31
SAD	9,125	0.58	$ 18,396	$ 1.16	$ 3,113	5.91
SEC	10,857	0.69	$ 21,101	$ 1.33	$ 3,113	6.78
SFC	13,362	0.84	$ 25,978	$ 1.64	$ 3,113	8.35
SFD	12,245	0.77	$ 23,727	$ 1.50	$ 3,113	7.62
MAC	32,473	0.55	$ 66,685	$ 1.12	$ 11,821	5.64
MAD	31,319	0.53	$ 65,252	$ 1.10	$ 11,821	5.52
MEC	42,027	0.71	$ 82,278	$ 1.38	$ 11,821	6.96
MFC	54,048	0.91	$ 107,490	$ 1.80	$ 11,821	9.09
MFD	48,060	0.81	$ 95,502	$ 1.60	$ 11,821	8.08
LAC	56,531	0.35	$ 114,904	$ 0.71	$ 9,744	11.79
LAD	53,597	0.33	$ 107,490	$ 0.66	$ 9,744	11.03
LEC	62,509	0.39	$ 122,780	$ 0.76	$ 9,744	12.60
LFC	74,006	0.46	$ 145,617	$ 0.90	$ 9,744	14.94
LFD	68,529	0.42	$ 133,486	$ 0.82	$ 9,744	13.70
SXX Average	11,049	0.70	$ 21,767	$ 1.37	$ 3,113	6.99
MXX Average	41,585	0.70	$ 83,442	$ 1.40	$ 11,821	7.06

DRAFT

LXX Average	63,034	0.39	$	124,855	$	0.77	$	9,744	12.81
XAX Average	32,117	0.49	$	65,393	$	1.00	$	8,226	7.95
XEX Average	38,464	0.59	$	75,386	$	1.16	$	8,226	9.16
XFX Average	45,042	0.70	$	88,633	$	1.38	$	8,226	10.77
ALL Average	38,556	0.59	$	76,688	$	1.18	$	8,226	9.32

CTZ05 Santa Maria - Liquid-Suction Heat Exchangers						
	Energy Savings (kWh)	Energy Savings/ SF (kWh)	TDV Cost Savings ($)	TDV Cost Savings /SF ($)	Measure Cost ($)	Benefit/ Cost Ratio
SAC	9,532	0.60	$ 19,028	$ 1.20	$ 3,113	6.11
SAD	9,033	0.57	$ 18,031	$ 1.14	$ 3,113	5.79
SEC	10,685	0.67	$ 20,718	$ 1.31	$ 3,113	6.66
SFC	13,095	0.83	$ 25,524	$ 1.61	$ 3,113	8.20
SFD	12,006	0.76	$ 23,362	$ 1.47	$ 3,113	7.50
MAC	31,886	0.54	$ 63,864	$ 1.07	$ 11,821	5.40
MAD	30,833	0.52	$ 62,867	$ 1.06	$ 11,821	5.32
MEC	41,142	0.69	$ 80,560	$ 1.35	$ 11,821	6.81
MFC	52,767	0.89	$ 104,536	$ 1.76	$ 11,821	8.84
MFD	46,998	0.79	$ 92,957	$ 1.56	$ 11,821	7.86
LAC	56,104	0.35	$ 112,501	$ 0.69	$ 9,744	11.55
LAD	53,325	0.33	$ 105,630	$ 0.65	$ 9,744	10.84
LEC	61,490	0.38	$ 120,724	$ 0.74	$ 9,744	12.39
LFC	72,485	0.45	$ 142,956	$ 0.88	$ 9,744	14.67
LFD	67,278	0.41	$ 131,448	$ 0.81	$ 9,744	13.49
SXX Average	10,870	0.69	$ 21,333	$ 1.35	$ 3,113	6.85
MXX Average	40,725	0.68	$ 80,957	$ 1.36	$ 11,821	6.85
LXX Average	62,136	0.38	$ 122,652	$ 0.76	$ 9,744	12.59
XAX Average	31,786	0.48	$ 63,653	$ 0.97	$ 8,226	7.74
XEX Average	37,772	0.58	$ 74,001	$ 1.13	$ 8,226	9.00
XFX Average	44,105	0.69	$ 86,797	$ 1.35	$ 8,226	10.55
ALL Average	37,911	0.58	$ 74,980	$ 1.15	$ 8,226	9.12

CTZ07 San Diego-Lindbergh - Liquid-Suction Heat Exchangers						
	Energy Savings (kWh)	Energy Savings/ SF (kWh)	TDV Cost Savings ($)	TDV Cost Savings /SF ($)	Measure Cost ($)	Benefit/ Cost Ratio
SAC	10,498	0.66	$ 21,359	$ 1.35	$ 3,113	6.86
SAD	10,210	0.64	$ 20,451	$ 1.29	$ 3,113	6.57
SEC	11,914	0.75	$ 23,406	$ 1.48	$ 3,113	7.52
SFC	14,991	0.95	$ 29,778	$ 1.88	$ 3,113	9.57
SFD	13,730	0.87	$ 27,153	$ 1.71	$ 3,113	8.72
MAC	36,348	0.61	$ 75,078	$ 1.26	$ 11,821	6.35
MAD	36,175	0.61	$ 74,517	$ 1.25	$ 11,821	6.30
MEC	47,604	0.80	$ 94,132	$ 1.58	$ 11,821	7.96
MFC	63,056	1.06	$ 127,417	$ 2.14	$ 11,821	10.78
MFD	56,902	0.96	$ 116,417	$ 1.95	$ 11,821	9.85
LAC	61,710	0.38	$ 125,299	$ 0.77	$ 9,744	12.86
LAD	57,541	0.35	$ 115,820	$ 0.71	$ 9,744	11.89
LEC	69,404	0.43	$ 138,096	$ 0.85	$ 9,744	14.17
LFC	82,654	0.51	$ 163,799	$ 1.01	$ 9,744	16.81
LFD	75,434	0.47	$ 148,464	$ 0.92	$ 9,744	15.24
SXX Average	12,269	0.77	$ 24,430	$ 1.54	$ 3,113	7.85
MXX Average	48,017	0.81	$ 97,512	$ 1.64	$ 11,821	8.25
LXX Average	69,349	0.43	$ 138,296	$ 0.85	$ 9,744	14.19
XAX Average	35,414	0.54	$ 72,087	$ 1.11	$ 8,226	8.76
XEX Average	42,974	0.66	$ 85,211	$ 1.30	$ 8,226	10.36

XFX Average	51,128	0.80	$	102,171	$	1.60	$	8,226	12.42
ALL Average	43,211	0.67	$	86,746	$	1.34	$	8,226	10.55

CTZ08 Fullerton - Liquid-Suction Heat Exchangers						
	Energy Savings (kWh)	Energy Savings/ SF (kWh)	TDV Cost Savings ($)	TDV Cost Savings /SF ($)	Measure Cost ($)	Benefit/ Cost Ratio
SAC	11,022	0.70	$ 23,816	$ 1.50	$ 3,113	7.65
SAD	10,405	0.66	$ 22,169	$ 1.40	$ 3,113	7.12
SEC	10,555	0.67	$ 21,003	$ 1.33	$ 3,113	6.75
SFC	13,374	0.84	$ 26,726	$ 1.69	$ 3,113	8.59
SFD	12,320	0.78	$ 24,358	$ 1.54	$ 3,113	7.82
MAC	42,019	0.71	$ 88,258	$ 1.48	$ 11,821	7.47
MAD	37,518	0.63	$ 79,919	$ 1.34	$ 11,821	6.76
MEC	46,810	0.79	$ 91,969	$ 1.54	$ 11,821	7.78
MFC	59,637	1.00	$ 120,386	$ 2.02	$ 11,821	10.18
MFD	53,468	0.90	$ 108,923	$ 1.83	$ 11,821	9.21
LAC	67,385	0.42	$ 139,796	$ 0.86	$ 9,744	14.35
LAD	59,689	0.37	$ 122,112	$ 0.75	$ 9,744	12.53
LEC	68,095	0.42	$ 133,842	$ 0.83	$ 9,744	13.74
LFC	81,510	0.50	$ 159,286	$ 0.98	$ 9,744	16.35
LFD	74,041	0.46	$ 143,605	$ 0.89	$ 9,744	14.74
SXX Average	11,535	0.73	$ 23,614	$ 1.49	$ 3,113	7.59
MXX Average	47,890	0.80	$ 97,891	$ 1.64	$ 11,821	8.28
LXX Average	70,144	0.43	$ 139,729	$ 0.86	$ 9,744	14.34
XAX Average	38,006	0.58	$ 79,345	$ 1.22	$ 8,226	9.65
XEX Average	41,820	0.62	$ 82,272	$ 1.23	$ 8,226	10.00
XFX Average	49,058	0.75	$ 97,214	$ 1.49	$ 8,226	11.82
ALL Average	43,190	0.65	$ 87,078	$ 1.33	$ 8,226	10.59

CTZ10 Riverside - Liquid-Suction Heat Exchangers						
	Energy Savings (kWh)	Energy Savings/ SF (kWh)	TDV Cost Savings ($)	TDV Cost Savings /SF ($)	Measure Cost ($)	Benefit/ Cost Ratio
SAC	11,673	0.74	$ 25,257	$ 1.59	$ 3,113	8.11
SAD	10,973	0.69	$ 23,282	$ 1.47	$ 3,113	7.48
SEC	10,894	0.69	$ 21,519	$ 1.36	$ 3,113	6.91
SFC	13,932	0.88	$ 27,865	$ 1.76	$ 3,113	8.95
SFD	12,798	0.81	$ 25,435	$ 1.60	$ 3,113	8.17
MAC	44,132	0.74	$ 98,938	$ 1.66	$ 11,821	8.37
MAD	39,679	0.67	$ 88,641	$ 1.49	$ 11,821	7.50
MEC	44,695	0.75	$ 89,023	$ 1.49	$ 11,821	7.53
MFC	57,550	0.97	$ 117,351	$ 1.97	$ 11,821	9.93
MFD	51,596	0.87	$ 106,752	$ 1.79	$ 11,821	9.03
LAC	71,153	0.44	$ 156,439	$ 0.96	$ 9,744	16.05
LAD	63,028	0.39	$ 132,445	$ 0.82	$ 9,744	13.59
LEC	66,643	0.41	$ 132,721	$ 0.82	$ 9,744	13.62
LFC	79,141	0.49	$ 156,830	$ 0.97	$ 9,744	16.10
LFD	72,097	0.44	$ 141,185	$ 0.87	$ 9,744	14.49
SXX Average	12,054	0.76	$ 24,672	$ 1.56	$ 3,113	7.93
MXX Average	47,530	0.80	$ 100,141	$ 1.68	$ 11,821	8.47
LXX Average	70,412	0.43	$ 143,924	$ 0.89	$ 9,744	14.77
XAX Average	40,106	0.61	$ 87,500	$ 1.33	$ 8,226	10.64
XEX Average	40,744	0.62	$ 81,088	$ 1.22	$ 8,226	9.86

XFX Average	47,852	0.74	$	95,903	$	1.49	$	8,226	11.66
ALL Average	43,332	0.66	$	89,579	$	1.38	$	8,226	10.89

CTZ12 Sacramento - Liquid-Suction Heat Exchangers						
	Energy Savings (kWh)	Energy Savings/ SF (kWh)	TDV Cost Savings ($)	TDV Cost Savings /SF ($)	Measure Cost ($)	Benefit/ Cost Ratio
SAC	11,022	0.70	$ 23,816	$ 1.50	$ 3,113	7.65
SAD	10,405	0.66	$ 22,169	$ 1.40	$ 3,113	7.12
SEC	10,555	0.67	$ 21,003	$ 1.33	$ 3,113	6.75
SFC	13,374	0.84	$ 26,726	$ 1.69	$ 3,113	8.59
SFD	12,320	0.78	$ 24,358	$ 1.54	$ 3,113	7.82
MAC	41,254	0.69	$ 93,429	$ 1.57	$ 11,821	7.90
MAD	36,948	0.62	$ 83,292	$ 1.40	$ 11,821	7.05
MEC	42,508	0.71	$ 85,464	$ 1.43	$ 11,821	7.23
MFC	54,805	0.92	$ 113,008	$ 1.90	$ 11,821	9.56
MFD	48,748	0.82	$ 101,447	$ 1.70	$ 11,821	8.58
LAC	67,386	0.42	$ 149,728	$ 0.92	$ 9,744	15.37
LAD	60,368	0.37	$ 127,630	$ 0.79	$ 9,744	13.10
LEC	64,155	0.40	$ 128,405	$ 0.79	$ 9,744	13.18
LFC	75,856	0.47	$ 151,036	$ 0.93	$ 9,744	15.50
LFD	69,692	0.43	$ 137,678	$ 0.85	$ 9,744	14.13
SXX Average	11,535	0.73	$ 23,614	$ 1.49	$ 3,113	7.59
MXX Average	44,853	0.75	$ 95,328	$ 1.60	$ 11,821	8.06
LXX Average	67,491	0.42	$ 138,896	$ 0.86	$ 9,744	14.25
XAX Average	37,897	0.58	$ 83,344	$ 1.26	$ 8,226	10.13
XEX Average	39,073	0.59	$ 78,290	$ 1.18	$ 8,226	9.52
XFX Average	45,799	0.71	$ 92,376	$ 1.43	$ 8,226	11.23
ALL Average	41,293	0.63	$ 85,946	$ 1.32	$ 8,226	10.45

CTZ13 Fresno - Liquid-Suction Heat Exchangers						
	Energy Savings (kWh)	Energy Savings/ SF (kWh)	TDV Cost Savings ($)	TDV Cost Savings /SF ($)	Measure Cost ($)	Benefit/ Cost Ratio
SAC	11,816	0.75	$ 25,604	$ 1.62	$ 3,113	8.22
SAD	11,269	0.71	$ 23,878	$ 1.51	$ 3,113	7.67
SEC	10,774	0.68	$ 21,466	$ 1.35	$ 3,113	6.90
SFC	13,672	0.86	$ 27,482	$ 1.73	$ 3,113	8.83
SFD	12,569	0.79	$ 25,088	$ 1.58	$ 3,113	8.06
MAC	45,884	0.77	$ 103,610	$ 1.74	$ 11,821	8.76
MAD	41,303	0.69	$ 92,147	$ 1.55	$ 11,821	7.80
MEC	43,858	0.74	$ 88,365	$ 1.48	$ 11,821	7.48
MFC	57,298	0.96	$ 118,179	$ 1.98	$ 11,821	10.00
MFD	51,446	0.86	$ 107,259	$ 1.80	$ 11,821	9.07
LAC	74,153	0.46	$ 163,994	$ 1.01	$ 9,744	16.83
LAD	64,813	0.40	$ 136,245	$ 0.84	$ 9,744	13.98
LEC	66,115	0.41	$ 132,739	$ 0.82	$ 9,744	13.62
LFC	78,369	0.48	$ 156,981	$ 0.97	$ 9,744	16.11
LFD	71,388	0.44	$ 141,718	$ 0.87	$ 9,744	14.54
SXX Average	12,020	0.76	$ 24,704	$ 1.56	$ 3,113	7.94
MXX Average	47,958	0.81	$ 101,912	$ 1.71	$ 11,821	8.62
LXX Average	70,968	0.44	$ 146,336	$ 0.90	$ 9,744	15.02
XAX Average	41,540	0.63	$ 90,913	$ 1.38	$ 8,226	11.05
XEX Average	40,249	0.61	$ 80,857	$ 1.22	$ 8,226	9.83

XFX Average	47,457	0.73	$	96,118	$	1.49	$	8,226	11.68
ALL Average	43,648	0.67	$	90,984	$	1.39	$	8,226	11.06

CTZ15 Palm Springs - Liquid-Suction Heat Exchangers						
	Energy Savings (kWh)	Energy Savings/ SF (kWh)	TDV Cost Savings ($)	TDV Cost Savings /SF ($)	Measure Cost ($)	Benefit/ Cost Ratio
SAC	14,843	0.94	$ 32,279	$ 2.04	$ 3,113	10.37
SAD	14,319	0.90	$ 30,784	$ 1.94	$ 3,113	9.89
SEC	11,522	0.73	$ 23,077	$ 1.46	$ 3,113	7.41
SFC	14,726	0.93	$ 29,636	$ 1.87	$ 3,113	9.52
SFD	13,555	0.86	$ 27,304	$ 1.72	$ 3,113	8.77
MAC	61,530	1.03	$ 135,693	$ 2.28	$ 11,821	11.48
MAD	56,107	0.94	$ 125,841	$ 2.11	$ 11,821	10.65
MEC	48,808	0.82	$ 99,392	$ 1.67	$ 11,821	8.41
MFC	63,149	1.06	$ 128,778	$ 2.16	$ 11,821	10.89
MFD	57,745	0.97	$ 119,247	$ 2.00	$ 11,821	10.09
LAC	97,061	0.60	$ 214,073	$ 1.32	$ 9,744	21.97
LAD	81,279	0.50	$ 173,846	$ 1.07	$ 9,744	17.84
LEC	73,078	0.45	$ 146,765	$ 0.91	$ 9,744	15.06
LFC	87,166	0.54	$ 177,362	$ 1.09	$ 9,744	18.20
LFD	78,377	0.48	$ 159,162	$ 0.98	$ 9,744	16.33
SXX Average	13,793	0.87	$ 28,616	$ 1.81	$ 3,113	9.19
MXX Average	57,468	0.96	$ 121,790	$ 2.04	$ 11,821	10.30
LXX Average	83,392	0.51	$ 174,241	$ 1.07	$ 9,744	17.88
XAX Average	54,190	0.82	$ 118,753	$ 1.79	$ 8,226	14.44
XEX Average	44,469	0.67	$ 89,744	$ 1.34	$ 8,226	10.91
XFX Average	52,453	0.81	$ 106,915	$ 1.64	$ 8,226	13.00
ALL Average	51,551	0.78	$ 108,216	$ 1.64	$ 8,226	13.16

16. Appendix K: Acronym List and Glossary

AB 32	(Assembly Bill 32) California Global Warming Solutions Act of 2006
AC	Air conditioner, or Air-conditioning
AHRI	Air-conditioning, Heating, and Refrigeration Institute
ARB	(California) Air Resources Board
B/C	Benefit to cost ratio
Btu	British thermal unit
Btu/h	British thermal units per hour
CA	California
CARB	California Air Resources Board
CASE	Codes and Standards Enhancement
CEC	California Energy Commission
CFC	Chlorofluorocarbon
CO_2	Carbon dioxide
CTZ01	Climate zone 1 - Arcata
CTZ03	Climate zone 3 - Oakland
CTZ05	Climate zone 5 - Santa Maria
CTZ07	Climate zone 7 - San Diego (Lindbergh)
CTZ08	Climate zone 8 - Fullerton
CTZ10	Climate zone 10 - Riverside
CTZ12	Climate zone 12 - Sacramento (Sacramento Executive Airport)
CTZ13	Climate zone 13 - Fresno
CTZ14	Climate zone 14 - Palmdale
CTZ15	Climate zone 15 - Palm Springs
DOE 2.2R	Department of Energy, energy simulation software, version 2.2R
DX	Direct expansion (refrigeration system)
EER	Energy efficiency ratio
EUL	Effective useful life
GHG	Greenhouse gas
GWP	Global warming potential
HFC	Hydrofluorocarbon
HVAC	Heating, ventilation, and air-conditioning
IPCC	Intergovernmental Panel on Climate Change
IPCC/TEAP	Intergovernmental Panel on Climate Change Technology and Assessment Panel
kW	Kilo-watt
kWh	Kilo-watt hour
LAC	Big box store (with) air-cooled (condenser) central (compressor system)
LAD	Big box store (with) air-cooled (condenser) distributed (compressor system)
LCC	Life-cycle costing
LEC	Big box store (with) evaporative-cooled (condenser) central (compressor system)
LED	Light-emitting diode
LFC	Big box store (with) water-cooled (condenser) central (compressor system)

LFD	Big box store (with) water-cooled (condenser) distributed (compressor system)
LSHX	Liquid suction heat exchanger
LT	Low-temperature
MAC	Large (supermarket with) air-cooled (condenser) central (compressor system)
MAD	Large (supermarket with) air-cooled (condenser) distributed (compressor system)
MBH	Thousand British thermal units per hour
MEC	Large (supermarket with) evaporative-cooled (condenser) central (compressor system)
MFC	Large (supermarket with) water-cooled (condenser) central (compressor system)
MFD	Large (supermarket with) water-cooled (condenser) distributed (compressor system)
MMBtu	Million British thermal units
MMTCO$_2$eq	Million metric tons of carbon dioxide equivalents
MT	Medium-temperature
MTCO$_2$eq	Metric tons of carbon dioxide equivalents
PG&E	Pacific Gas and Electric
R-404A	Refrigerant 404A, a "nearly azeotropic" blend of hydrofluorocarbons R-143a (52 wt.%), R-125 (44 wt.%), and R-134a (4 wt.%).
R-507	Refrigerant 507A, a "nearly azeotropic" blend of hydrofluorocarbons R-143a (50 wt.%), and R-125 (50 wt.%).
RGT	Return gas temperature
SAC	Small (supermarket with) air-cooled (condenser) central (compressor system)
SAD	Small (supermarket with) air-cooled (condenser) distributed (compressor system)
SBD	Savings By Design
SCAQMD	South Coast Air Quality Management District
SCE	Southern California Edison
SCT	Saturated condensing temperature
SDG&E	San Diego Gas and Electric
SEC	Small (supermarket with) evaporative-cooled (condenser) central (compressor system)
SET	Saturated evaporating temperature
SF	Square foot
SFC	Small (supermarket with) water-cooled (condenser) central (compressor system)
SFD	Small (supermarket with) water-cooled (condenser) distributed (compressor system)
SST	Saturated suction temperature
TBD	To be determined
TD	Temperature difference
TDV	Time-dependent valuation
THR	Total heat of rejection
TXV	Thermostatic expansion valve

U.S. EPA	United States Environmental Protection Agency
W	Watt
WBT	Wet-bulb temperature

ADDITION is any change to a building that increases conditioned floor area and conditioned volume. Addition is also any change that increases the floor area or volume of an unconditioned building of an occupancy group or type regulated by Part 6.

ALTERATION is any change to a building's water-heating system, space-conditioning system, lighting system, or envelope that is not an addition.

APPLIANCE EFFICIENCY REGULATIONS are the regulations in Title 20, Section 1601 et seq. of the California Code of Regulations.

BUBBLE POINT. Refrigerant liquid saturation temperature at a specified pressure.

CONDENSER SPECIFIC EFFICIENCY is the Total Heat of Rejection (THR) capacity divided by the fan input electric power at 100% fan speed (including spray pump electric input power for evaporative condensers).

COOLER is space greater than or equal to 28°F but less than 55°F.

CLIMATE ZONES are the 16 geographic areas of California for which the Commission has established typical weather data, prescriptive packages and energy budgets. Climate zone boundary descriptions are in the document "California Climate Zone Descriptions" (July 1995).

CLOSED-CIRCUIT COOLING TOWER is a closed-circuit cooling tower that utilizes indirect contact between a heated fluid, typically water or glycol, and the cooling atmosphere to transfer the source heat load indirectly to the air, essentially combining a heat exchanger and cooling tower into one relatively compact device.

DEW POINT. Refrigerant vapor saturation temperature at a specified pressure.

FREEZER is space designed to maintain less than 28°F and space designed for convertible between cooler and freezer operation.

MICRO-CHANNEL CONDENSER is an air-cooled condenser for refrigeration systems which utilizes multiple small parallel gas flow passages in a flat configuration with unitized fin surface between the gas passages, rather than round tubes arranged at a right angle to separate plate fins.

REFRIGERANT CONDENSING TEMPERATURE: See SATURATED CONDENSING TEMPERATURE

REFRIGERATED WAREHOUSE is a building or a space constructed for storage of products, where mechanical refrigeration is used to maintain the space temperature at 55o F or less.

REFRIGERATED SPACE is a building or a space that is a refrigerated warehouse, walk-in cooler, or a freezer.

SATURATED CONDENSING TEMPERATURE (CONDENSING TEMPERATURE, or SCT). For single component and azeotropic refrigerants, the saturation temperature corresponding to the refrigerant pressure at the condenser entrance. For zeotropic refrigerants, the arithmetic average of

the Dew Point and Bubble Point temperatures corresponding to the refrigerant pressure at the condenser entrance.

THERMOSTATIC EXPANSION VALVE (TXV) is a refrigerant metering valve, installed in an air conditioner or heat pump, which controls the flow of liquid refrigerant entering the evaporator in response to the superheat of the gas leaving it.

TIME DEPENDENT VALUATION (TDV) ENERGY is the time varying energy caused to be used by the building to provide space conditioning and water heating and for specified buildings lighting. TDV energy accounts for the energy used at the building site and consumed in producing and in delivering energy to a site, including, but not limited to, power generation, transmission and distribution losses.

TOTAL HEAT OF REJECTION (THR) is the heat absorbed at the evaporator plus the heat picked up in the suction line plus the heat added to the refrigerant in the compressor.