Forma
and As
at 27

3. ~~4.Minimum Capabilities~~Compliance Software Tests

This chapter describes the methods used to test the ~~minimum modeling capabilities~~functionality of candidate compliance software programs. There are separate tests for space conditioning tests and water heating tests. Most of the space conditioning tests are performed using a simple square building prototype. ~~(see Figure R4-7).~~ The water heating tests are performed relative to two prototype water heating systems. Most of the tests are performed in only five climate zones, but some are performed in all sixteen climate zones. The Energy Commission, at its discretion, may require additional tests to justify the accuracy of the candidate compliance software to confirm other required features. Tests may be modified, added, or requested to be preformed with fixed inputs to verify specific modeling features.

3.1 Overview

~~Two types of tests are performed: accuracy tests and standard design generator tests (or custom budget tests). While compliance software programs shall pass all these tests, the Energy Commission, at its discretion, may require additional tests to justify the accuracy of the candidate compliance software to confirm other required features.~~

~~3.1.1 Accuracy Tests~~

~~This section describes the general testing concept that is used for the accuracy tests. For the prototype buildings and the specified variations, candidate compliance software programs shall generate an estimate of TDV energy and this is compared to the TDV energy that is estimated with the reference method. The TDV energy of the candidate compliance software shall be within an acceptable tolerance of the reference method in order for the compliance software to pass the test. The margin of acceptability is defined below and may change for each group of tests. For the space conditioning tests, only the TDV energy for space conditioning is considered and for the water heating test only the TDV for water heating is considered.~~

~~*3.1.1.1 General Procedure*~~

~~**Basecase**. Each test begins with a prototype building or system that exactly complies with the prescriptive criteria (package D); this is the basecase building or system. The basecase has a zero compliance margin, e.g. it exactly complies with the standard. In another parlance, it is the custom budget building.~~

~~**Discrete Modifications**. A set of discrete modifications are then made to the basecase building or system, e.g. the ducts are sealed, walls and ceilings are field verified for good construction quality or a different type of heating or cooling equipment is installed. The discrete modifications are defined for each test and may vary slightly for each climate zone identified for the test. The discrete modifications are selected to represent important compliance measures. The discrete modifications will either improve or degrade the TDV energy performance of the basecase building, e.g. the compliance margin of the modified basecase will become either positive or negative.~~

~~**Continuous Variable**. A continuous variable, which is identified for each test, is then increased or reduced so that the modified basecase complies by a specified tolerance and fails by a specified tolerance. The continuous variables have a predictable and continuous impact on the TDV energy of~~

~~the proposed design. Examples are SEER, AFUE, and glass area (above 20 percent of the floor area). The value for the continuous variable that causes the modified basecase to pass by the specified tolerance is the "passing solution" and the value that causes failure by the specified tolerance is the "failing solution". The "failing solution" shall result in TDV energy as close as possible to the negative tolerance, but shall be greater than the negative tolerance. The "passing solution" shall result in TDV energy as close as possible to the positive tolerance but shall be less than the positive tolerance. The positive and negative tolerances are defined for each test, but in general they are 1.0 kTDV/ft² y or 3 percent of the baseline TDV energy whichever is greater.~~

~~The procedure is illustrated in Figure R4-1 through Figure R4-4. In these diagrams, the base case building is represented by point "A". The vertical axis represents the compliance margin with a positive compliance margin (building or system passes) above the horizontal axis and a negative compliance margin (building or system fails) below the horizontal axis. Figure R4-1 and Figure R4-3show instances when the discrete modifications produce a positive compliance margin and Figure R4-2 and Figure R4-4 are examples of discrete modifications that produce a negative compliance margin. When the discrete modifications produce a change in TDV energy that is within the specified tolerances, the passing solution or failing solutions are equal to the basecase value of the continuous variable. This situation is illustrated in Figure R4-3 and Figure R4-4.~~

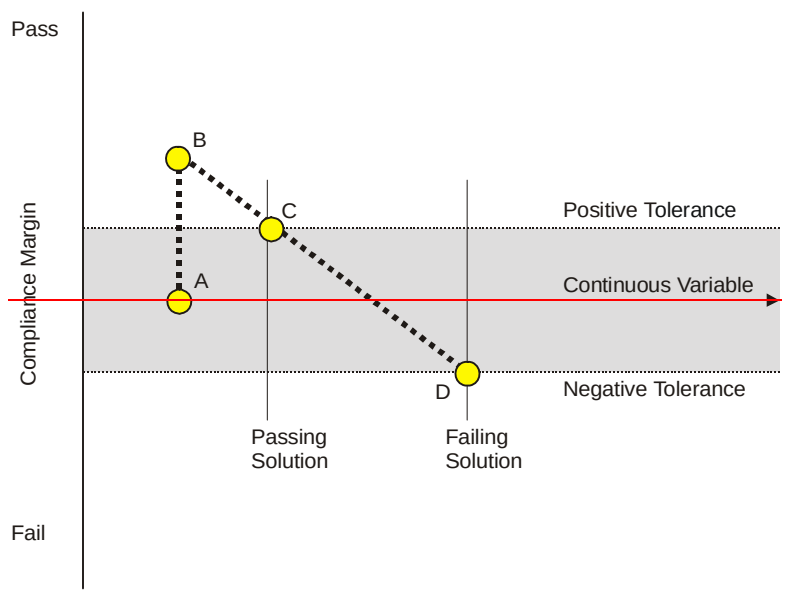

~~*Figure R4-1 – Testing Concept – Discrete Modifications Produce Positive Compliance Margin*~~

~~*The discrete modifications produce a positive compliance margin that exceeds positive tolerance. Both the passing solution and the failing solutions for the continuous variable are determined.*~~

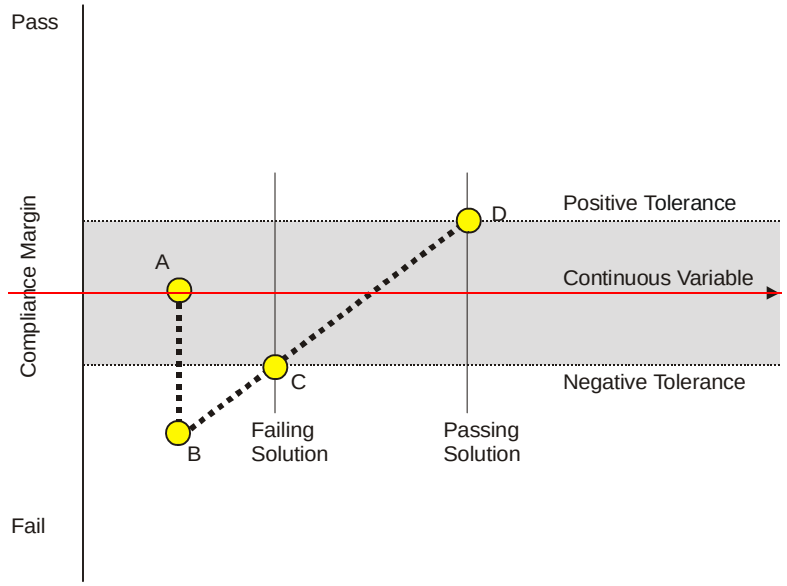

~~*Figure R4-2 – Testing Concept – Discrete Modifications Produce Negative Compliance Margin*~~

~~*The discrete modifications produce a negative compliance margin that exceeds negative tolerance. Both the passing solution and the failing solutions for the continuous variable are determined.*~~

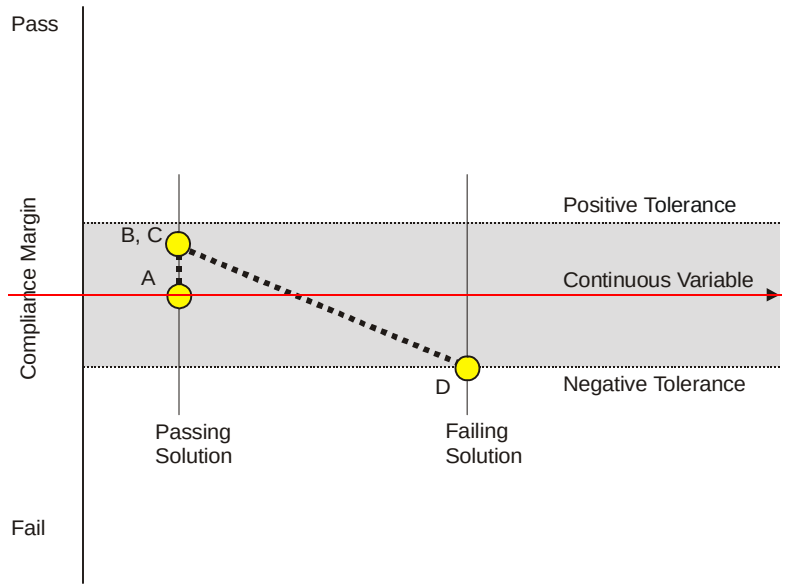

~~*Figure R4-3 – Testing Concept – Discrete Modifications Produce Positive But Small Compliance Margin*~~

~~*The discrete modifications produce a positive compliance margin that is less than the positive tolerance. The passing solution for the continuous variable is equal to the basecase; the failing solution is determined by the vendor..*~~

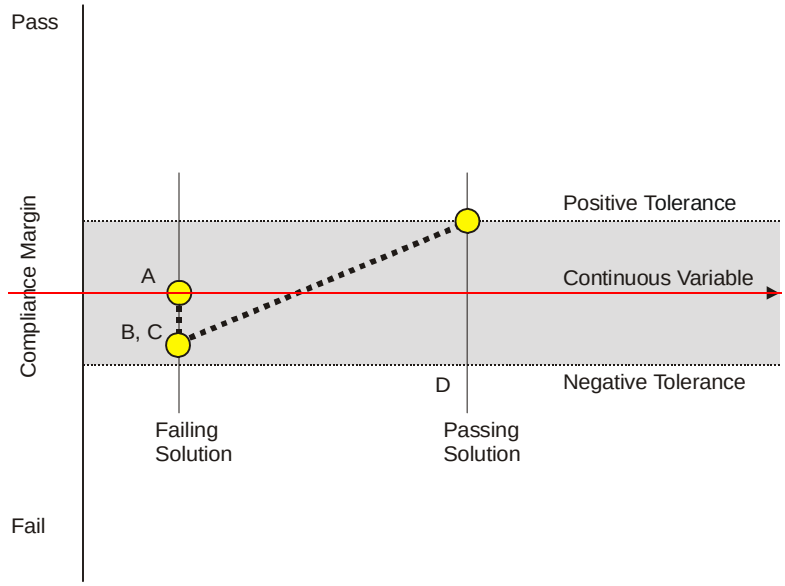

~~*Figure R4-4 – Testing Concept – Discrete Modifications Produce Negative But Small Compliance Margin*~~
~~*The discrete modifications produce a negative compliance margin that is within the negative. The failing solution for the continuous variable is equal to the basecase; the passing solution is determined by the vendor.*~~

~~*3.1.1.2 Acceptance Criteria*~~

~~For every test, the Energy Commission reference method shall pass the modified basecase when data for the passing solution is entered and fail the modified basecase when data for the failing solution is entered. The acceptance criteria shall be satisfied for all tests. In addition to producing estimates that are within the tolerances, the tests are also used to verify that the standard reports are correctly produced, as required in Chapter 2. For instance, many of the discrete modifications trigger measures that shall be listed in the "Special Features and Modeling Assumptions" section of the Certificate of Compliance. Finally, the tests will be used to verify that the standard design building is correctly defined, as specified in Chapter 3.~~

~~3.1.2~~3.1.1 Standard Design Tests

~~The acceptance criteria for the standard design generator tests use a different approach from the accuracy tests.~~ Two types of tests are used to verify that the standard design is created according to the rules specified in Chapter 2: These are defined below along with the acceptance criteria for each.

~~*3.1.2.1*~~*3.1.1.1 Standard Design Equivalent Tests*

The standard design equivalent tests consist of matched pairs of computer runs: a proposed design and its standard design equivalent. The standard design equivalent is the proposed design reconfigured according to the standard design rules ~~in Chapter 3~~ to be in exact compliance with the prescriptive requirements (package A~~D~~). The compliance software vendor is required to create the proposed design and standard design equivalent input files and submit them with the application for approval. Two Certificates of Compliance are produced: one for the proposed design and one for the standard design equivalent. The standard design TDV energy budget on the proposed design Certificate of Compliance shall be equal to the TDV energy use shown in both the standard design energy budget and proposed design columns of the standard design equivalent computer run. See Figure R3-.

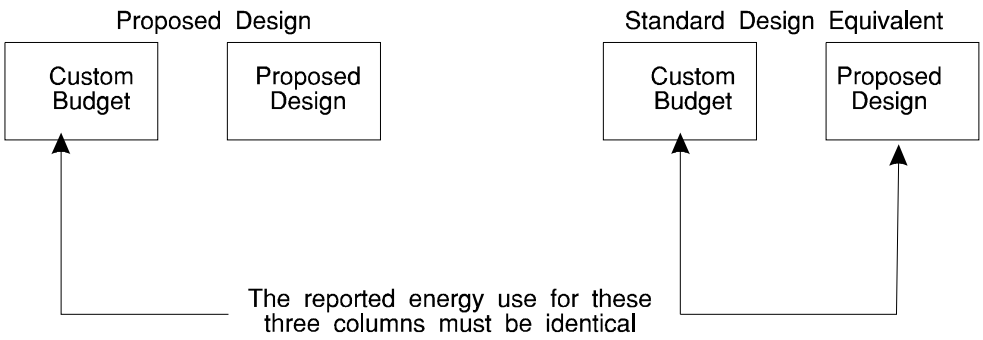

Figure R3~~4-5~~ 1 – Custom Budget Tests

~~3.1.2.2~~3.1.1.2 Neutral Variable Tests

The second series of standard design equivalent tests are the neutral variable tests. Neutral variables are building features that are unchanged between the standard design and the proposed design. An example of a neutral variable is glass area, below the prescriptive limit of 20 percent. In this series of tests, a change is specified in one of the neutral variables and the compliance margin has to remain within a certain tolerance.

~~3.1.3~~3.1.2 Labeling Tests and Computer Simulations

Each of the tests has a specific label that includes the test series, the number of the test, the prototype used in the test and the climate zone for which the test is performed. Using a precise designation to make it easier to keep track of the many computer simulations will ease the Energy Commission review process. The following labeling scheme described in Figure R3- shall be used:

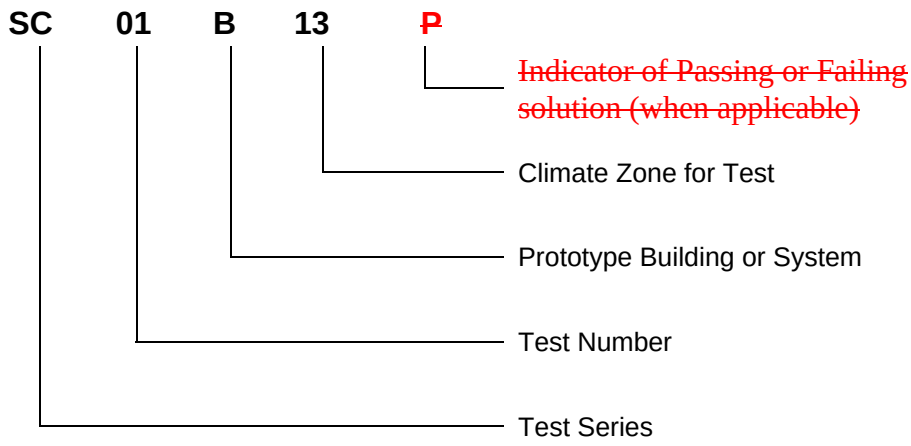

Figure R3~~4-6~~ 2 – Labeling of Computer Simulations

Compliance Software input and output files shall use the same labeling scheme~~, but with a "P" or "F" concatenated on the end to indicate if the file represents the passing or failing solution.~~.

~~3.1.4~~3.1.3 Documentation

The C~~c~~ompliance S~~s~~oftware vendor shall record the results of the tests on the forms provided in RACM Appendix A- and provide electronic copies of the input files to the Energy Commission. ~~The filenames shall include the test label (see below) with a "P" or "F" concatenated to the file name to indicate if the file represents the passing solution or the failing solution. The form (RACM Appendix A-) includes an entry for the TDV energy for the passing solution and the failing solution. The forms also include the continuous variable values for the passing and failing solutions as well as the compliance software filenames for the passing and failing cases.~~

3.2 Space Conditioning Tests (SC)

This section describes the space conditioning tests that shall be performed by the C~~c~~ompliance S~~s~~oftware vendor. ~~Three groups of tests are described. The first verify that space conditioning TDV energy is predicted with an acceptable tolerance of that predicted by the reference method. The~~This ~~second~~ series of tests verify that the custom budget or standard design is correctly defined for space conditioning systems. These space conditioning tests use the series designation "SC."~~. The third series of tests verify that the compliance software calculates TDV energy correctly for additions and alterations to low-rise residential buildings.~~

~~3.2.1 Accuracy Tests (SC)~~

~~The accuracy tests verify that the candidate compliance software passes and fails buildings in a manner consistent with the reference method.~~

~~*3.2.1.1 Prototype Buildings*~~

~~The space conditioning accuracy tests are performed with two prototype buildings. The geometry of the prototype buildings and other features are described below and illustrated in Figure R4-7. The attic is not shown in Figure R4-7 since the dimensions and configuration of the attic are determined by the ceiling area.~~

~~Both prototype A and B are a square box measuring 40 ft by 40 ft and 10 ft tall. A single 80 ft² window on each façade (total window area is 20 percent of the floor area). The facades face exactly north, east, south and west. The thermal performance of all building envelope elements is in exact compliance with the prescriptive requirements (package D in the standards). The prototypes have a gas furnace and a split system air conditioner with air distribution ducts located in the attic.~~

~~A – Prototype A has a slab-on-grade.~~

~~B – Prototype B has raised floor construction.~~

~~*Figure R4-7 – Prototype Buildings A and B*~~

~~*3.2.1.2 Test Descriptions*~~

~~Table R4-51 describes each of the space conditioning tests that shall be performed. The space conditioning accuracy tests use the series designation "SC."~~

~~Table R4-51 – Summary of the Space Conditioning Tests~~

~~Series~~	~~Number~~	~~Prototypes~~	~~Climates~~	~~Discrete Modification(s)~~	~~Continuous Variable~~
~~SC~~	~~0~~	~~A, B~~	~~All~~	~~None~~	~~None~~
~~SC~~	~~01~~	~~A~~	~~3, 9, 12, 14, 16~~	~~**Ceiling U-factor**. Reduce the ceiling U-factor from the basecase condition to R-48. The U-factor for this condition shall be taken from Reference Joint Appendix JA4. Do not assume field verification for construction quality. Produces a positive compliance margin.~~	~~**South Glass Area**. Increase south glass area to find the Passing Solution and the Failing Solution.~~
~~SC~~	~~02~~	~~A~~	~~3, 9, 12, 14, 16~~	~~**Wall U-factor**. Increase wall insulation to the equivalent of R-22 in a 2x6 wood framed cavity with R-14 continuous insulation. The U-factor for this condition shall be taken from Reference Joint Appendix JA4. Do not assume field verification for construction quality. Produces a positive compliance margin.~~	~~**West Glass Area**. Increase west glass area to find the Passing Solution and the Failing Solution.~~
~~SC~~	~~03~~	~~A~~	~~12, 14, 16~~	~~**Slab edge losses**. Add R-7 slab insulation for climate zones 12 and 14. In climate zone 16, increase slab edge insulation from the basecase R-7 to R-21. Produces a positive compliance margin.~~	~~**North Glass Area**. Increase north glass area to find the Passing Solution and the Failing Solution.~~
~~SC~~	~~04~~	~~A~~	~~3, 9, 12, 14, 16~~	~~**Fenestration Type**. Replace the basecase fenestration with a super high performance product with a U-factor of 0.25 and a SHGC of 0.40. Produces a positive compliance margin.~~	~~**North Glass Area**. Increase north glass area to find the Passing Solution and the Failing Solution.~~
~~SC~~	~~05~~	~~A~~	~~3, 9, 12, 14, 16~~	~~**Fenestration Type**. Replace the basecase fenestration with a product that fails to comply with the package D requirements. The replacement product shall have a U-factor of 0.90 and an SHGC of 0.70. Produces a negative compliance margin.~~	~~**AFUE**. Increase or reduce the heating equipment AFUE to find the Passing Solution and the Failing Solution.~~
~~SC~~	~~06~~	~~A~~	~~12, 14, 16~~	~~**Exposed Thermal Mass**. Increase the percent of the slab-on-grade that is exposed from the basecase condition of 20% to 40%. Produces a positive compliance margin.~~	~~**South Glass Area**. Increase south glass area to find the Passing Solution and the Failing Solution.~~
~~SC~~	~~07~~	~~A~~	~~3, 9, 12, 14, 16~~	~~**South Overhangs**. Add a two foot projection from the surface of the south glass. Its bottom edge is located six inches above the top of the window. The window is assumed to be 6 ft 6 in. high and the overhang is assumed to extend an infinite distance beyond the sides of the windows (see Figure R4-8). Produces a positive compliance margin.~~	~~**South Glass Area**. Increase south glass area to find the Passing Solution and the Failing Solution.~~
~~SC~~	~~08~~	~~A~~	~~3, 9, 12, 14, 16~~	~~**Building Envelope Sealing**. Reduce the building (SLA) from 4.9 to 2.9 through diagnostic testing and sealing. Produces a positive compliance margin.~~	~~**Glass Area**. Increase glass area uniformly on all orientations to find the Passing Solution and the Failing Solution.~~
~~SC~~	~~09~~	~~A~~	~~3, 9, 12, 14, 16~~	~~**Building Envelope Sealing and Mechanical Ventilation**. The building leakage (SLA) is reduced from 4.9 to 2.9 through diagnostic testing and sealing. In addition, mechanical ventilation is added that provides 80 cfm (0.375 air changes per hour) of continuous ventilation and consumes 20 watts of power continuously. Produces a positive compliance margin.~~	~~**Glass Area**. Increase glass area uniformly on all orientations to find the Passing Solution and the Failing Solution.~~
~~SC~~	~~10~~	~~A~~	~~3, 9, 12, 14, 16~~	~~**Construction Quality**. Assume that the proposed design has been field verified to have quality wall and ceiling insulation quality. Produces a positive compliance margin.~~	~~**AFUE**. Reduce the heating equipment AFUE to find the Passing Solution and the Failing Solution.~~
~~SC~~	~~11~~	~~A~~	~~9, 12, 14~~	~~**Cool Roofing Products / Radiant Barrier**. Remove the radiant barrier (or equivalent cool roof) from the proposed design. Produces a negative compliance margin.~~	~~**SEER**. Increase the SEER (using default EER) to find the Passing Solution and the Failing Solution.~~

~~Series~~	~~Number~~	~~Prototypes~~	~~Climates~~	~~Discrete Modification(s)~~	~~Continuous Variable~~
~~SC~~	~~12~~	~~A~~	~~9, 12, 14~~	~~**Side Fins**. For this test side fins are added to the east and west facades of prototype A. The side fins extend 40 feet from the surface of a window that is assumed to be 10 feet wide. The fins are 5 feet from the edge of the window. The top of the side fins are 20 feet above the top of the window. See Figure R4-9. Sidefins are expected to produce a positive compliance margin.~~	~~**SEER**. Vary the SEER (keep EER at the default) to find the passing solution and fail the failing solution.~~
~~SC~~	~~13~~	~~A~~	~~9, 12, 14~~	~~**Natural Ventilation**. Change the window types to increase the free ventilation area from the default of 10% of the total window area to 20% of the window area, and assume a 10 ft elevation difference between the air inlet and the outlet. Produces a positive compliance margin.~~	~~**SEER**. Reduce the SEER (using default EER) to find the Passing Solution and the Failing Solution.~~
~~SC~~	~~14~~	~~A~~	~~9, 12, 14~~	~~**Roofing Type** Change roofing type from tile to composition shingles. Produces a negative compliance margin.~~	~~**Attic Ventilation**. Increase the attic ventilation to find the Passing Solution and the Failing Solution.~~
~~SC~~	~~15~~	~~A~~	~~9, 12, 14~~	~~**Deck Insulation** Add R-4 insulation to the roof deck.. Produces a positive compliance margin~~	~~**Ceiling Insulation**. Reduce the ceiling insulation to find the Passing Solution and the Failing Solution.~~
~~SC~~	~~16~~	~~A~~	~~3, 9, 12, 14, 16~~	~~**SEER**. Increase the cooling equipment efficiency (SEER) from the base case condition of 13.0 to 14.0. Use the default EER for both the SEER 13.0 and SEER 14.0 cases. Make no changes to the air distribution system or other HVAC system components. Produces a positive compliance margin.~~	~~**AFUE**. Reduce the heating equipment AFUE to find the Passing Solution and the Failing Solution.~~
~~SC~~	~~1~~	~~A~~	~~3, 9, 12, 14, 16~~	~~**EER**. Increase the cooling equipment efficiency (SEER) from the base case condition of 13.0 to 14.0. Use an EER 13 for the SEER 14.0 case. Make no changes to the air distribution system or other HVAC system components. Produces a positive compliance margin.~~	~~**SHGC**. Increase the SHGC of the windows on all orientations to find the Passing Solution and the Failing Solution.~~
~~SC~~	~~18~~	~~A~~	~~3, 9, 12, 14, 16~~	~~**Duct Leakage**. Do not seal the ducts as required by the prescriptive standards. Produces a negative compliance margin.~~	~~**SEER**. Increase the SEER (using default EER) to find the Passing Solution and the Failing Solution.~~
~~SC~~	~~19~~	~~A~~	~~3, 9, 12, 14, 16~~	~~**Duct Surface Area.** Through diagnostic verification, reduce duct surface area from the default of 27% of the floor area to 10% of the floor area. Produces a positive compliance margin.~~	~~**SEER**. Reduce the SEER (using default EER) to find the Passing Solution and the Failing Solution.~~
~~SC~~	~~20~~	~~B~~	~~9, 12, 14~~	~~**Duct Location.** Move the HVAC ducts from the crawlspace (the default for one story, raised floor buildings) to the attic. Produces a negative compliance margin.~~	~~**SEER**. Reduce the SEER (using default EER) to find the Passing Solution and the Failing Solution.~~
~~SC~~	~~21~~	~~B~~	~~9, 12, 14~~	~~**Buried Ducts.** Change the status of the ducts to deep buried. Produces a positive compliance margin.~~	~~**AFUE**. Decrease the AFUE to find the Passing Solution and the Failing Solution.~~
~~SC~~	~~22~~	~~B~~	~~9, 12, 14~~	~~**Change HVAC type.** Replace the existing furnace with a heat pump. Change the HSPF to 9 and the SEER to 14. Produces a positive compliance margin.~~	~~**HSPF** Decrease the HSPF to find the Passing Solution and the Failing Solution.~~
~~SC~~	~~23~~	~~A~~	~~9, 12, 14~~	~~**Duct Insulation.** Reduce the duct R-value from the R-8 prescriptive requirement to R-4.2. Produces a negative compliance margin.~~	~~**SEER**. Increase the SEER (using default EER) to find the Passing Solution and the Failing Solution.~~
~~SC~~	~~24~~	~~A~~	~~9, 12, 14~~	~~**Energy Efficiency Ratio (EER)**. Instead of using the default EER of 10.415 for the default SEER 12 assume an EER of 11.5 with the same SEER of 12). Produces a positive compliance margin.~~	~~**SHGC**. Increase the SHGC of the windows on all orientations to find the Passing Solution and the Failing Solution.~~
~~SC~~	~~25~~	~~A~~	~~9, 12, 14~~	~~**Charge Indicator Light / Charge Testing**. Do not install a Charge Indicator Light and do not field verify that the split system has the correct refrigerant charge. Produces a negative compliance margin.~~	~~**SHGC**. Reduce the SHGC of the windows on all orientations to find the Passing Solution and the Failing Solution.~~

~~Series~~	~~Number~~	~~Prototypes~~	~~Climates~~	~~Discrete Modification(s)~~	~~Continuous Variable~~
~~SC~~	~~26~~	~~A~~	~~9, 12, 14~~	~~**Airflow Across Evaporator Coil**. Verify through field verification that there is adequate airflow for compliance credit (350 cfm/ton for a wet coil) across the evaporator coil. Produces a positive compliance margin.~~	~~**SHGC**. Increase the SHGC of the windows on all orientations to find the Passing Solution and the Failing Solution.~~
~~SC~~	~~27~~	~~A~~	~~9, 12, 14~~	~~**Air Conditioner Fan Power**. Reduce fan power through field verification. The default is 0.51 W/cfm. Reduce this to 0.20 W/cfm. Produces a positive compliance margin.~~	~~**SHGC**. Increase the SHGC of the windows on all orientations to find the Passing Solution and the Failing Solution.~~
~~SC~~	~~28~~	~~A~~	~~3, 9, 12~~	~~**Electric Heat**. Replace the gas furnace and air distribution system in the basecase with electric resistance baseboards (no air distribution or duct losses). In addition, increase the ceiling insulation to R-60. The U-factor for this condition shall be taken from Reference Joint Appendix JA4 Do not assume field verification for construction quality. Produces a negative compliance margin.~~	~~**Fenestration U-factor**. Reduce the fenestration U-factor on all orientations to find the Passing Solution and the Failing Solution.~~

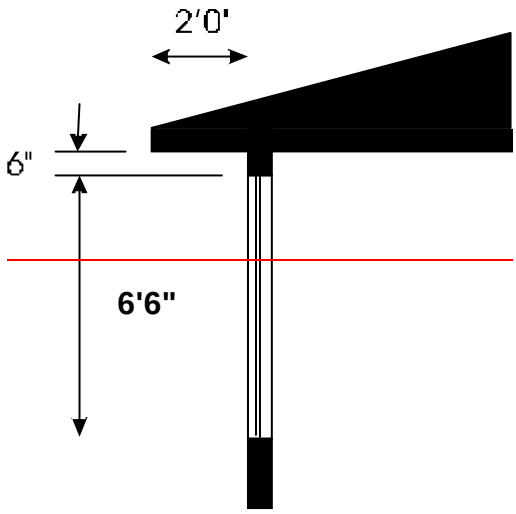

~~*Figure R4-8 – Overhang Characteristics*~~

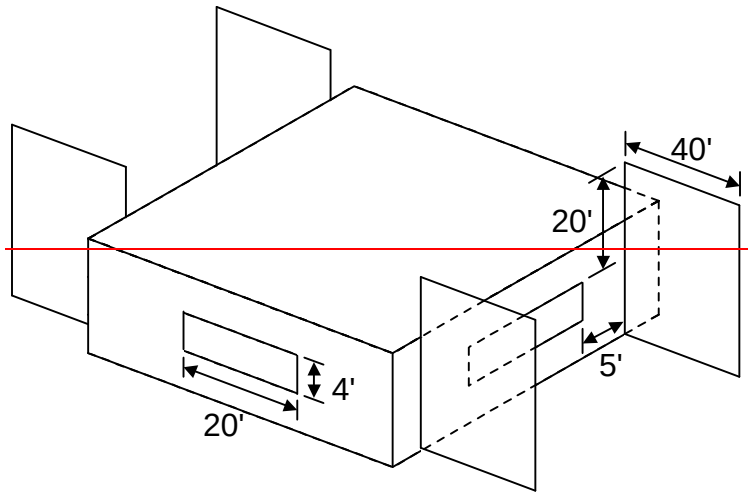

~~*Figure R4-9 – Side Fins for Optional Capabilities Test*~~
~~*The north and south façades are the ones that do not have the sidefins.*~~

~~***3.2.1.3 Acceptance Criteria***~~

~~The positive tolerance is the basecase TDV energy for space conditioning plus 3 percent or 1 kTDV/ft² y, whichever is greater. The negative tolerance is the basecase TDV energy for space conditioning less 3 percent or 1 kTDV/ft² y, whichever is greater. The Energy Commission reference method shall pass the modified basecase when data for the passing solution is entered and fail the modified basecase when data for the failing solution is entered.~~
~~In addition to producing estimates that are within the tolerances, the tests are also used to verify that the standard reports are correctly produced, as required in Chapter 2. For instance, many of the discrete modifications trigger measures that shall be listed in the "Special Features and Modeling Assumptions" section of the Certificate of Compliance.~~

~~3.2.2~~3.2.1 Standard Design ~~Generator~~ Tests ~~*(SD)*~~

This section describes the standard design tests that shall be performed by the C~~c~~ompliance S~~s~~oftware vendor. ~~The standard design tests use the series designation "SD." Compliance software shall automatically create the standard design building, as defined in Chapter 3.~~ The standard design run is made automatically at the same time as the proposed design run, and the results are reported together on the Certificate of Compliance discussed in Chapter 2. The tests described in this section verify that the standard design is correctly defined for the proposed design and that the custom budget is correctly calculated. ~~These tests supplement the SC tests, which also verify certain standard design features.~~

~~***3.2.2.1***~~***3.2.1.1 Prototypes Buildings***

The custom budget tests use three prototype buildings as described below.

C Prototype C is a 2,100 ft², one -story, single-family detached home. Two versions of this prototype are used in the tests. One has a slab floor and one has a raised floor. Details are available from the Energy Commission.

D Prototype D is a 2,700 ft², two-story detached home. Details are available from the Energy Commission.

E Prototype E is an eight-unit, two-story multi-family building, with a total conditioned floor area of 6,960 ft^2. Details are available from the Energy Commission.

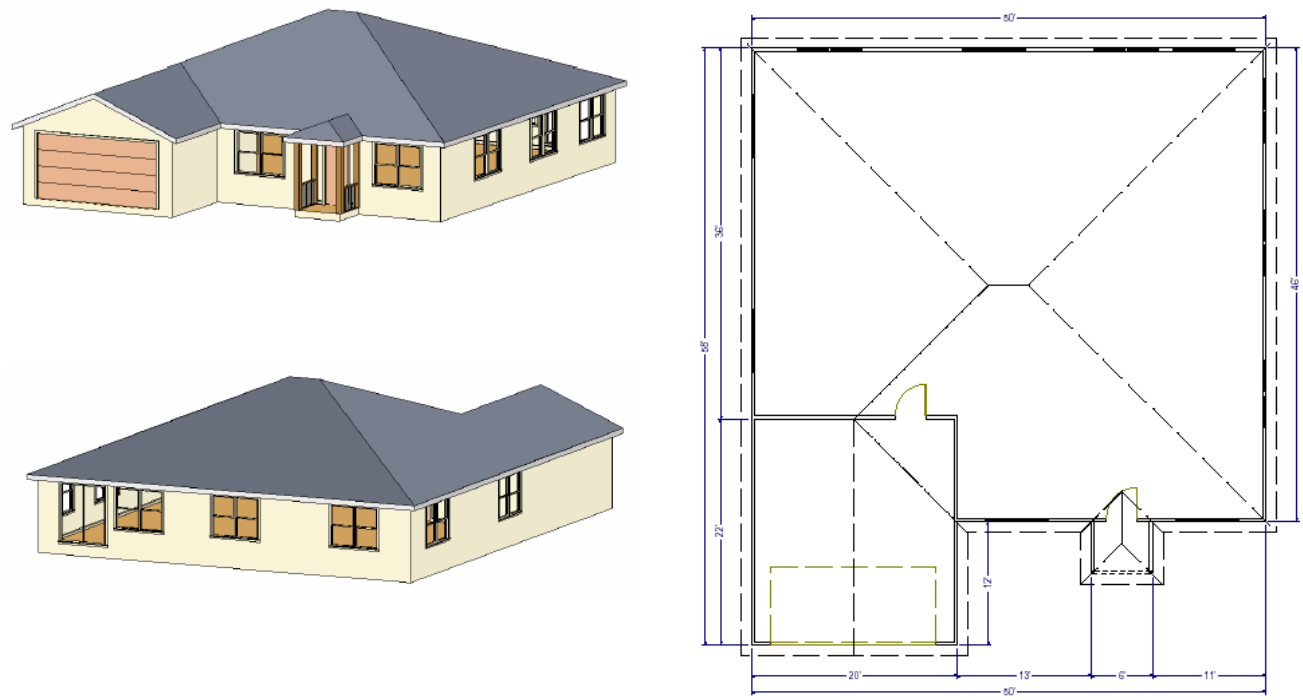

Figure R~~4-10~~3-3 – Prototype C

Figure R~~4-11~~3-4 – Prototype D

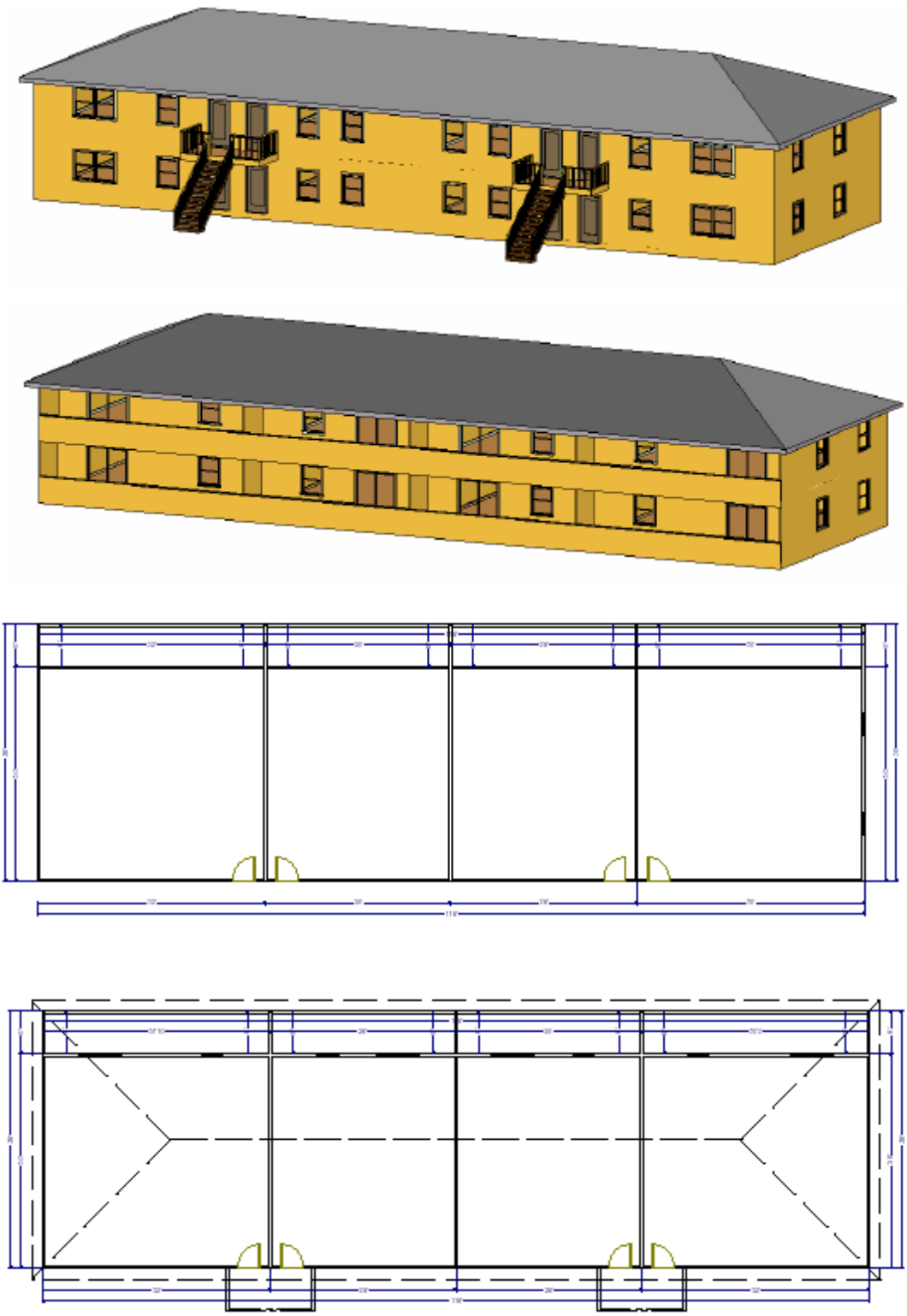

Figure R3-5 – Prototype E

~~3.2.2.2~~3.2.1.2 Standard Design Equivalent Tests

The standard design equivalent tests are described in ~~Table R4-52~~Table R. For each of these tests, the standard design equivalent budget and proposed design TDV energy shall equal each other. In addition, the TDV energy shall equal the budget TDV energy for the proposed building.

Table R3-1 – Standard Design Tests

Series	*Number*	*Prototypes*	*Climates*	*Description*
SC~~D~~	00	A, B	All	**Basecase Prototypes**. These tests were also performed in the SC series. For each of these tests, the standard design and proposed design TDV energy shall be equal. There is no proposed design case for these tests.
SC~~D~~	01	C	All	**Slab-On-Grade**. The purpose of this test is to verify that the standard design generator correctly defines the standard design for proposed designs using slab-on-grade designs. The "SC01C**" files are run in all 16 climate zones.
SC~~D~~	02	D	All	**Raised Floor**. The purpose of this test is to verify that the standard design generator correctly defines the standard design for proposed designs using raised floor buildings. The "SC01D**" files are run in all 16 climate zones.
SC~~D~~	03	E	All	**Multi-Family.** The purpose of this test is to verify that the standard design generator correctly defines the standard design for multi-family buildings. The "SC01E**" files are run in all 16 climate zones.
SC~~D~~	04	A	All	**Equipment Change Heating**. The purpose of this test is to verify that the standard design generator correctly defines the standard design for proposed designs using non ducted mechanical systems. The "SC01D**" files are run in all 16 climate zones. Heating equipment is switched to Gas Wall heater with 0.62 AFUE no ducts.
SC~~D~~	05	A	All	**Equipment Change Cooling**. The purpose of this test is to verify that the standard design generator correctly defines the standard design for proposed designs using non ducted mechanical systems. The "SC01D**" files are run in all 16 climate zones. Cooling equipment is switched to Wall AC with a 10 EER.

~~*3.2.2.3*~~*3.2.1.3 Neutral Variable Tests*

The neutral variable tests are described in Table R3-. For each of these tests, the compliance margin shall remain within one percent of zero.

Table R3-2 – Neutral Variable Design Tests – Space Conditioning

Series	*Number*	*Prototypes*	*Climates*	*Description*
SC~~D~~	06	A	3, 9, 12, 14, 16	**Window Area**. Reduce window area from 20% of the floor area to 15% of the floor area. Reduce the size of the window on each façade to 60 ft². Do not change any other features.
SC~~D~~	07	A	3, 9, 12, 14, 16	**Wall Area.** Increase the gross wall area on each façade from 400 ft² to 600 ft².

~~3.2.3 Additions and Alternations (AA)~~

~~This section describes the tests for alternations and additions that shall be performed by the compliance software vendor. The additions and alternations tests use the series designation "AA." Additions are treated as new buildings except that internal heat gains are allocated on a fractional dwelling unit basis. With the Addition + Existing + Alternation approach, energy credit may be taken for improvements to the existing building. This series of tests exercises the various default assumptions (see Table R3-50 in Section 3.16.4) based on the vintage of the existing building and the various reporting requirements for modeling an addition with an existing building. In addition, these tests verify the proper determination of the energy budget and compliance criteria for an addition with an improved existing building.~~

~~3.2.3.1 Prototype Buildings~~

~~The prototype used in these tests consists of an existing building and an addition. The existing building has the same physical configuration as Prototype A but the thermal performance of building envelope components is downgraded to be more typical of older existing buildings. Prototype E (Figure R4-12) has the thermal characteristics of 1977 construction practice and Prototype F has the thermal characteristics of 1989 construction practice. See the Additions and Alternations section of Chapter 3 for details on construction assemblies. Each window is 4 ft high and 20 ft wide centered on the façade. The addition is 12 ft deep by 40 ft long and 10 ft high and covers the whole west side of the existing building.~~

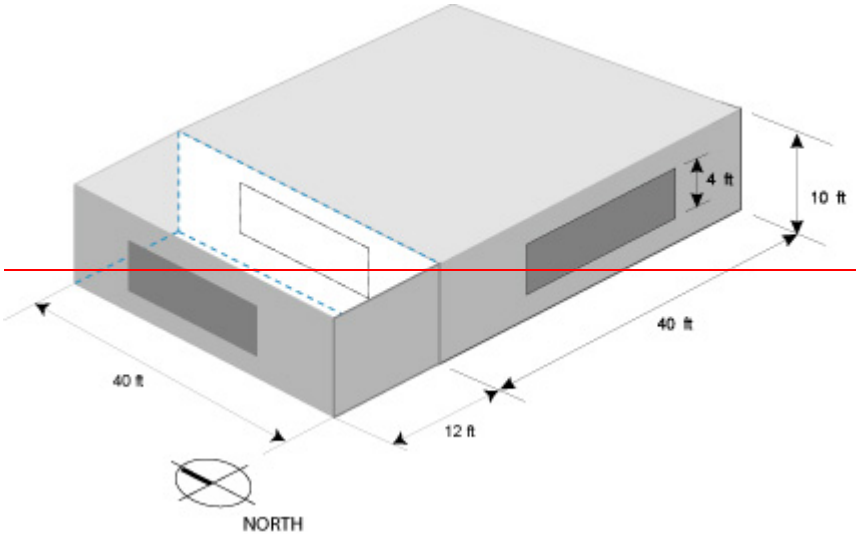

~~*Figure R4-13 – Prototypes E and F*~~

~~3.2.3.2 Test Descriptions~~

~~These tests are also be used to confirm that reporting requirements are met when modeling an addition with an existing building and that the appropriate budgets have been correctly determined. Two of the three compliance approaches for additions and alternations are evaluated with these tests: the addition-alone approach and the Existing + Addition + Alteration approach. The whole building approach is not evaluated since this is identical to new construction. Table R4-54 describes the tests to perform with the Addition-Alone approach. Table R4-55 describes the tests to perform with the Existing + Addition + Alteration approach.~~

~~Table R4-54 – Summary of the Addition-Alone Tests~~

~~Series~~	~~Number~~	~~Prototypes~~	~~Climates~~	~~Discrete Modification(s)~~	~~Continuous Variable~~
~~AA~~	~~01~~	~~E 1977~~	~~3, 9, 12, 14, 16~~	~~**Baseline**. The features of the addition shall all exactly meet the prescriptive requirements. The addition is served by an HVAC system in the existing house.~~	~~**None**. This is a standard design generator test.~~
~~AA~~	~~02~~	~~E 1977~~	~~3, 9, 12, 14, 16~~	~~**Increase Glass**. Increase fenestration area on the west side of the addition to 144 ft². This discrete change will fail compliance because the glass area exceeds 20% of the floor area.~~	~~**Fenestration Area U-factor**. Reduce the fenestration U-factor in the addition to find the Passing Solution and the Failing Solution.~~
~~AA~~	~~03~~	~~F 1989~~	~~3, 9, 12, 14, 16~~	~~**New HVAC**. Install a separate minimal efficiency HVAC split system gas/electric system for the addition that has no duct testing. This will create a negative compliance margin.~~	~~**Duct Testing/Insulation**. Change the assumption to duct testing and increase the duct insulation until a failing and passing compliance margin are met.~~

~~Table R4-55 – Summary Existing + Addition + Alternation Tests~~

~~Series~~	~~Number~~	~~Prototypes~~	~~Climates~~	~~Discrete Modification(s)~~	~~Continuous Variable~~
~~EA~~	~~1~~	~~E 1977~~	~~3, 9, 12, 14, 16~~	~~**Baseline**. The features of the addition shall all exactly meet the prescriptive requirements. The addition is served by an HVAC system in the existing house. Remove 80 ft² from the existing west wall and include 80 ft² with the addition (no net increase in glass area)~~	~~**None**. This is a standard design generator test.~~
~~EA~~	~~2~~	~~E 1977~~	~~3, 9, 12, 14, 16~~	~~**Increase Glass**. Increase fenestration area on the west side of the addition to 144 ft². This discrete change will fail compliance because the glass area exceeds 20% of the floor area.~~	~~**Fenestration U-factor**. Reduce the fenestration U-factor in the addition to find the Passing Solution and the Failing Solution.~~
~~EA~~	~~3~~	~~F 1989~~	~~3, 9, 12, 14, 16~~	~~**New HVAC**. Install a separate HVAC split system gas/electric system for the addition that has an SEER of 14 and an EER of 13. This will create a positive compliance margin.~~	~~**Fenestration U-factor**. Increase the fenestration U-factor in the addition to find the Passing Solution and the Failing Solution.~~
~~EA~~	~~04~~	~~E 1977~~	~~3, 9, 12, 14, 16~~	~~**New Ducts.** Install new ducts in an alteration with no duct testing and no duct insulation.. This will create a negative compliance margin.~~	~~**Duct Insulation.** Change the assumption to duct testing and increase the duct insulation until a failing and passing compliance margin are met.~~

~~*3.2.3.3 Acceptance Criteria*~~

~~For each test, the Energy Commission reference method shall pass the addition plus existing building when data for the passing solution is entered and fail the addition plus existing building when data for the failing solution is entered. The positive tolerance is the TDV space conditioning energy for the basecase plus 3 percent or 1 kBtu/ft²-y, whichever is greater, and the negative tolerance is also 3 percent or 1 kBtu/ft²-y, whichever is greater. In addition to producing estimates that are within the tolerances, the Energy Commission will also verify that the correct performance factors are used, based on the vintage of the existing building, and that the standard reports are correctly produced, as required in Chapter 2.~~

3.3 Water Heating Tests (WH)

This section describes the water heating tests that shall be performed by the compliance software vendor. The water heating tests use the series designation “WH”. The water heating tests are defined in a similar manner as the space conditioning tests, except that the tests are performed relative to a water heating system, not whole building TDV energy. See the Overview section of this chapter for a

description of the procedures. For the water heating tests, only the TDV energy for water heating is considered in the comparison.

3.3.1 Prototype Systems

Two prototype water heating systems are used. The first is a system which serves the single family home represented by space conditioning prototype C~~ (the water heating system also uses the "C" designation)~~. The second is a system that serves the multi-family apartment building represented by prototype E~~ (this uses the "E" designation)~~. More information on the buildings served is provided above in the prototype descriptions for the space conditioning tests. The water heating systems for the two prototypes are described in Table R3-.

Table R3-3 – Base Case Water Heating Systems

Prototype	Prototype C	Prototype E
Building Information		
Dwelling Units	1	16
Total Building Area	2,100 ft²	6,960 ft²
Average Dwelling Unit Size	2,100 ft²	870 ft²
Water Heating Equipment		
Number of Water Heaters	1	4
Water Heater Type	Storage Gas (SG)	Large Storage Gas (SG)
Energy Factor/Thermal Eff/Standby	0.575	0.80/700 Btu/h per unit4
Tank Size	50	4 @ 100
Distribution System	Standard (PIK)	Recirculation with timer controls
Multi-Family Recirculation System		
Linear Feet of Pipe (Note 1)	n.a.	200
PF Outdoor Air	n.a.	0.10
PF Ground	n.a.	0.20
PF Conditioned or semi-conditioned air within the building envelope	n.a.	0.70
Pipe Diameter for Recirculation System	n.a.	1.5 in.
Recirculation Pipe Insulation	n.a.	1.0 in.
Pump Size (brake horsepower)	n.a.	½ hp
Pump Motor Efficiency	n.a.	0.85
Note 1. Total Linear feet used for recirculation between dwelling units (input to Section 3.15). PF is the fraction of the total linear feet that is used either outside, in the ground, or in the conditioned or semi-conditioned air within the building envelope, as defined in RACM Appendix E4.		

~~3.3.2 Accuracy Tests (WH)~~

~~As described in the Overview of this chapter, the compliance software vendor shall find the passing and failing solution for each test described in Table R4-57. The Energy Commission reference method shall then pass the modified basecase when data for the passing solution is entered and fail the modified basecase when data for the failing solution is entered. The acceptance criteria shall be satisfied for all tests. The water heating tests use a 2 percent passing tolerance and a 2 percent failing tolerance, or 1.0 kTDV/ft² y, whichever is greater.~~

~~*Table R4-57 – Accuracy Tests – Water Heating*~~

~~*Type*~~	~~*Test*~~	~~*Prototypes*~~	~~*Climates*~~	~~*Discrete Modification(s)*~~	~~*Continuous Variable*~~
~~WH~~	~~0~~	~~C, E~~	~~All~~	~~None~~	~~None~~
~~WH~~	~~1~~	~~C~~		~~**Distribution Type** Add uncovered below grade plumbing to the distribution system. Produces a negative compliance.~~	~~**Energy Factor Increase** the EF for the water heater until the passing and failing solutions are reached~~
~~WH~~	~~2~~	~~C~~	~~3, 9, 12, 14, 16~~	~~**Electric Instantaneous Water Heater.** Change the water heater type from gas storage to electric Instantaneous and use a point of use (POU) distribution system. This produces a negative compliance margin.~~	~~**Solar Savings Fraction (SSF).** Increase the SSF to find the passing and failing solutions.~~
~~WH~~	~~3~~	~~C~~	~~3, 9, 12, 14, 16~~	~~**Recirculation Control.** Change the distribution system from the default to demand recirculation with manual control. This produces a positive compliance margin.~~	~~**Energy Factor.** Reduce the EF of the water heater until the passing and failing solutions are reached.~~
~~WH~~	~~4~~	~~E~~	~~3, 9, 12, 14, 16~~	~~**Recirculation Control.** Add monitored system controls (MCS) for the recirculating system. This produces a positive compliance margin.~~	~~**Thermal Efficiency**. Decrease thermal efficiency (recovery efficiency or AFUE) until the failing solution is reached.~~
~~WH~~	~~5~~	~~C~~	~~3, 9, 12, 14, 16~~	~~**Large Storage Water Heater.** Change water heater type to a 80 gallon large gas storage, SBL of 800 btuhr, thermal (recovery) efficiency= 0.80~~	~~**Thermal Efficiency.** Increase thermal efficiency (recovery efficiency or AFUE) until the passing solution is reached.~~
~~WH~~	~~7~~	~~C~~	~~3, 9, 12, 14, 16~~	~~**Number of Water Heaters.** Use 2 water heaters for the single residence; both are the same size and performance as the basecase. This will produce a negative compliance margin~~	~~**Energy Factor.** Increase the energy factor of both water heaters together to find passing and failing solutions.~~
~~WH~~	~~8~~	~~E~~	~~3, 9, 12, 14, 16~~	~~**Pump Controls.** Baseline assumes timer pump controls. Change to no pump control. This produces a negative compliance margin.~~	~~**Thermal Efficiency.** Increase thermal efficiency (recovery efficiency or AFUE) until the passing and failing solution is reached.~~

~~3.3.3~~3.3.2 Standard Design Tests ~~(WD)~~

This section describes a series of tests that verify that the standard design is being correctly defined for water heating systems. The acceptance criteria for these tests are different from the accuracy tests. For this series of tests, a change is defined, which according to the rules for defining the standard design should be neutral,~~.~~ ~~Being neutral~~ meanings~~s~~ that the change is reflected for both the standard design and the proposed design. The compliance margin shall be within plus or minus 2 percent of the standard design TDV energy for water heating (space conditioning is not considered). In addition, TDV energy for water heating shall move in the direction indicated in each test description.

~~*3.3.3.1*~~*3.3.2.1* ***Standard Design Equivalent Tests***

For water heating the standard design equivalent tests consist of running the basecase water heating systems in all 16 climates. For each case, the standard design TDV energy shall equal the proposed design TDV energy. See Table R3-4 below.

Table R3-4 – Standard Design Equivalent Tests – Water Heating

Type	*Test*	*Prototypes*	*Climates*	*Discrete Modification(s)*	*Continuous Variable*
WH~~D~~	0	C, E	All	None	None

~~3.3.3.2~~3.3.2.2 Neutral Variable Tests

The neutral variable tests are shown in Table R3-. For these tests, the compliance margin shall remain at zero, unchanged.

Table R3-5 – Neutral Variable Tests – Water Heating

Type	*Test*	*Prototypes*	*Climates*	*Discrete Modification(s)*
WH~~D~~	1	C	3, 9, 12, 14, 16	**House Size**. Increase house size to 2,500 ft². TDV energy for both the *Standard Design* and the *Proposed Design* shall increase.
WH~~D~~	2	C	3, 9, 12, 14, 16	**House Size**. Increase house size to 3,500 ft². The TDV energy for both the *Standard Design* and the *Proposed Design* shall equal the TDV energy for test 1.
WH~~D~~	3	E	3, 9, 12, 14, 16	**Pipe Length**. Increase recirculation piping length to 400 ft. TDV energy for both the *Standard Design* and the *Proposed Design* shall increase.
WH~~D~~	4	E	3, 9, 12, 14, 16	**Pipe Location**. Move all the piping outdoors. PF ground and plenum become zero and PF outdoors becomes 1.00. TDV energy for both the *Standard Design* and the *Proposed Design* shall increase.
WH~~D~~	5	E	3, 9, 12, 14, 16	**Individual Water Heaters.** Replace the central water heating system with individual water heaters in each dwelling unit, which meet the basecase specification for single-family homes (see Table R3-)