© 2006 Building Science Press All rights of reproduction in any form reserved.

Advanced Framing: Using Wood Efficiently From Optimizing Design to Minimizing the Dumpster

Research Report - 0201

2002 August by Steven Baczek, Peter Yost and Stephanie Finegan, Building Science Corporation

---

Abstract:

Americans have been building homes with wood—shaping logs, joining timbers, nailing studs—for almost 400 years. Our current approach, stick framing, grew popular in the mid-1800's (particularly in the rapidly growing "West") because it took less skill, required simpler tools, and took fewer people than timber framing. We apparently really like waste haulers, too. The NAHB Research Center reports that the "typical" home generates about 3,500 pounds of wood waste during its construction, about half of which is solid sawn lumber.

USING WOOD EFFICIENTLY: FROM OPTIMIZING DESIGN TO MINIMIZING THE DUMPSTER

"Wood is good, be it used as it should."
Anonymous Amish carpenter

Steve Baczek, Peter Yost and Stephanie Finegan

SETTING THE STAGE

Americans have been building homes with wood—shaping logs, joining timbers, nailing studs—for almost 400 years. Our current approach—stick-framing—grew popular in the mid-1800's (particularly in the rapidly growing "West") because it took less skill, required simpler tools, and took fewer people than timber framing.

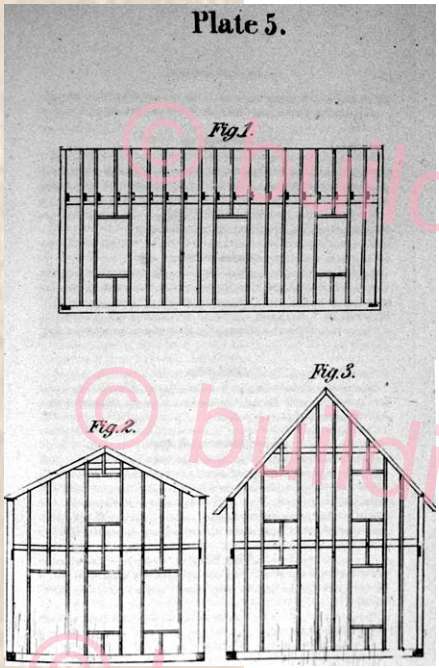

Figure 1
Early efficient framing diagram. One theory of the origin of the term "balloon" framing is that it was a derogatory term given, probably by timber framers, to buildings so framed that would "float away." This plate is taken from a book entitled Carpentry Made Easy, William Bell, 1858.

We still like building homes with wood. According to the NAHB Research Center's Annual Builder Practices Survey - 1999, 87.7% of the 1.7 million homes built that year, single-family and multi-family, were stick-framed.

We also like building with lots of wood. The National Association of Home Builders (NAHB) reports that a "typical" home takes just over 13, 100 board feet of lumber. That's about three-quarters of an acre of forest just for framing lumber.

Figure 2
Where one stud is good, two must be better, and 9 must be the ultimate. This is MVE — minimal value engineering.

We apparently really like waste haulers, too. The NAHB Research Center reports that the "typical" home generates about 3,500 pounds of wood waste during its construction, about half of which is solid sawn lumber.

Figure 3
Disposal or delivery? This is wood waste paid for 3 times: purchase, site handling (several times), and disposal.

So, let's do the math for US home building each year (assuming that 1999 is a representative year, which it was, just slightly above the average over the last 5 years):

1. just under **1.5 million homes** stick-framed,
2. consuming just under **2 billion board feet** of framing lumber, and,
3. generating just under **1.3 million tons** of solid-sawn wood waste (throw in another million plus tons of engineered wood waste—mostly plywood and OSB—for good measure).

© 2002 Building Science Corporation

LAYING OUT THE OPPORTUNITIES

There are opportunities to use wood more efficiently at every stage of a home's design and construction—you could call this optimum value engineering (OVE) from start to finish. Most people think of OVE as a method of wood frame construction, limiting the concept to just a part of the total building process. But OVE is getting the most bang for your buck **throughout** the building process.

Lots of builders just don't like the term OVE, regardless of how it is used. It implies changes or solutions offered **to** builders but not **by** builders. Throughout this paper, every wood efficiency concept is supported by Building Science Corporation's field experiences under the Department of Energy's Building America program. Building America is all about taking ideas from the office to the field with our nation's leading production builders. That's **from** builders, **for** builders, period.

Many aspects of efficient use of wood are inter-related, complicating or even confounding categorization. We find it useful to layout the opportunities in the following way:

- design and layout
- material selections and purchase
- delivery and on-site storage
- framing techniques (including an innovative new shear panel)
- waste/disposal (including an innovation called the **SEE stud**)

We say opportunities because, more often than not, using wood more efficiently saves time, money, energy, and resources—for you, your customer, and your community. Given its goals, this is why wood efficiency has been such a good fit for the Building America program. (See case studies on pages 18 — 26.)

DESIGN AND LAYOUT

There certainly is a lot more to consider in home design than framing efficiency; there are aesthetics, marketability, utility, and siting, just to mention a few. But framing efficiency does not have to come at the expense of the others. A reasonable balance can result in efficient and beautiful buildings. Efficiency does not mean forcing it into every nook and cranny of your design; it means employing any or all of the techniques below when it makes sense and cents.

We have grouped design and layout together because we feel there is a natural and inextricable relationship between the two. The design informs layout, but we think that the reverse should

SYSTEM BENEFITS OF USING WOOD EFFICIENTLY

As you would expect, efficient use of wood means you buy less wood and **save on material costs** -- the Building America builders from the case studies on pages 18 - 26 saved in the neighborhood of $450 to over $1,100 per house in lumber and sheathing purchases (this does not include the difficult-to-quantify-but-significant labor savings associated with handling, cutting, and installing less lumber, by the way).

But the savings and value don't stop there:

- **Improved thermal performance** - any insulation material performs a minimum of three times better than wood, so less wood means more energy savings for the home owner. Take a look at the **Centex Homes** and **Pulte Homes Case Studies**.
- **Reduced callbacks** - fewer cold spots (particularly at outside corners) and the reduced stress associated with fewer points of contact between framing and gypsum board cut down on one of the most common and expensive callbacks--drywall cracking. **Building America partner Town and Country Homes** of Chicago, Illinois reports drywall callbacks dropping from between $1,200 and $1,500 to only $150 per house with the switch to an advanced framing package.
- **Reduced disposal costs** - Greater efficiency means less waste and lower disposal costs. Check out the comprehensive approach of Building America builder **Artistic Homes**.
- **Reduced environmental impact** - fewer trees cut, homes that use less energy and last longer, and less materials sent to local landfills all translate into "**greener**" homes and significant public environmental benefit. Check out what this has meant at the Building America project, **Prairie Crossing**.

© 2002 Building Science Corporation

be true as well. It represents the good fit that can exist between architecture and engineering in residential buildings.

- **Footprint**
  Every jog added to a square or rectangular building footprint can challenge framing efficiency, some more than others. The trick is to include framing material and framing layout considerations **during** building design. It is possible to engineer an elegant home, but only if the full range of structural materials and their properties are an intentional part of the design process, not an afterthought.

- **Dimensions**
  Real estate developers often play a game of inches when it comes to room dimensions, but it is easy to satisfy buyer expectations regarding room sizes and still use modular design. Modular design is basically using two-foot increments as often as possible, taking full advantage of the material dimensions supplied by the manufacturing industry, particularly sheathing goods and large framing members. In general, it makes more sense to optimize for outside dimensions and hence framing/wood sheathing materials than it does to optimize for interior dimensions.

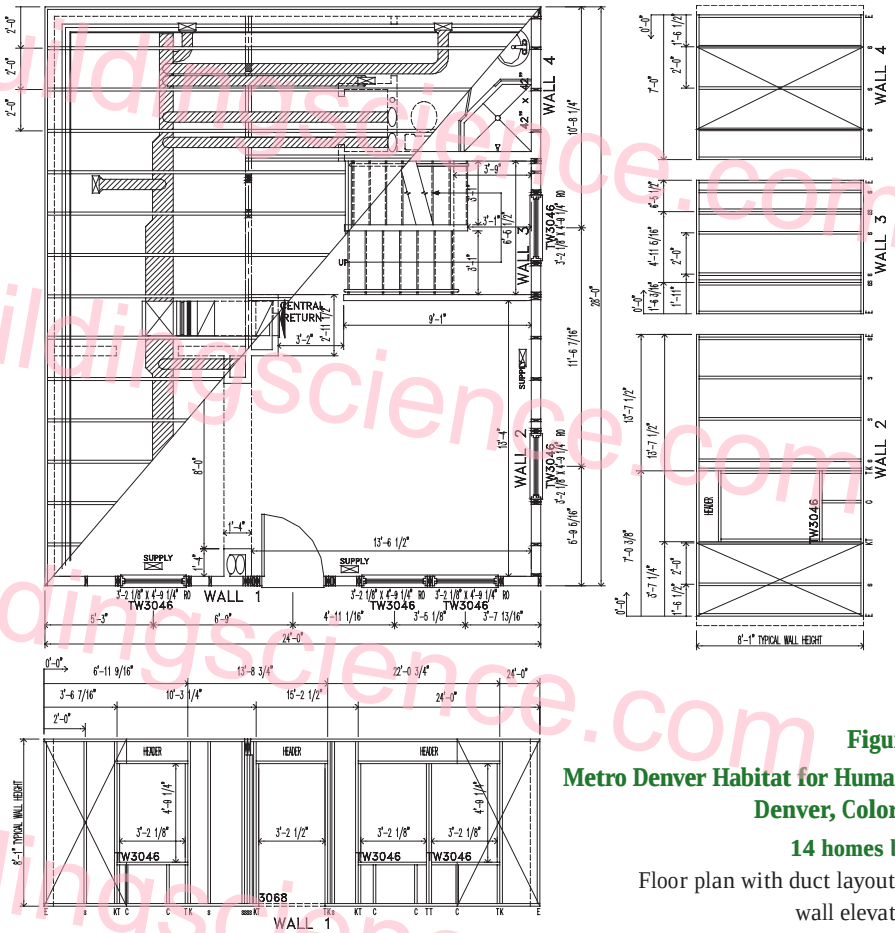

Figure 4
Metro Denver Habitat for Humanity
Denver, Colorado
14 homes built
Floor plan with duct layout and wall elevations

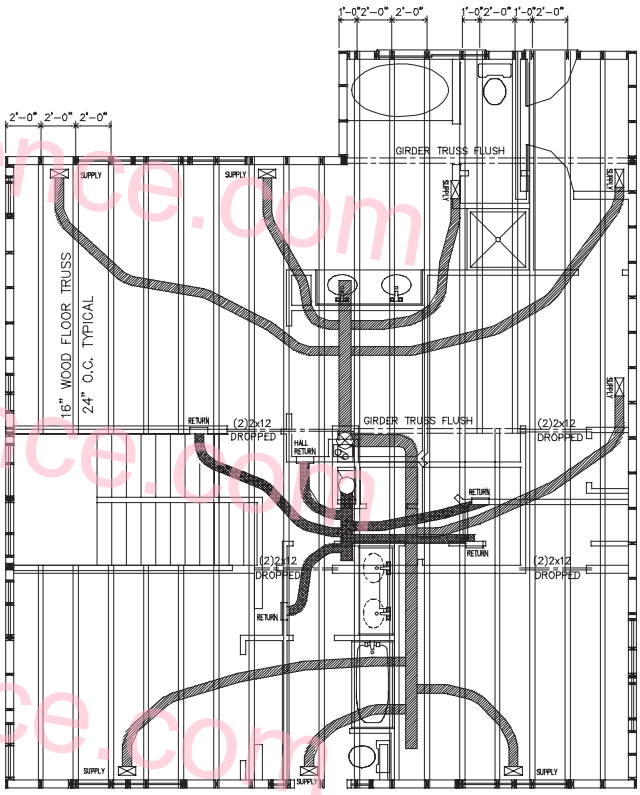

Figure 5
Town & Country Homes
Centennial Crossing
Vernon Hills, Illinois
A framing plan can do more than just lay out floor joists. There are opportunities to value engineer the floor system and obtain a proper joist count, to ensure all plumbing is coordinated with the floor framing, to ensure all HVAC is coordinated with the floor framing, and to ensure that the "stack framing" concept is followed on the job site. Most importantly, all these issues are resolved on paper prior to casting the foundation.

© buildingscience.com

© 2002 Building Science Corporation

Figure 6
Prairie Holdings
Prairie Crossing
Grayslake, Illinois
199 built/131 planned

The two plans to the right illustrate an interesting comparison in terms of overall building footprint and its relationship to wood frame construction. Both plans are from a Building America Development at Prairie Crossing in Grayslake Il. The top figure at right is a four bedroom plan with approximately 2,300 square feet of floor area. The bottom figure at right is also a four bedroom plan with approximately 2,500 square feet of floor area. Although very similar in function and floor area, the bottom plan poses additional challenges to the builder and to the performance of the house: twice as many walls to build and coordinate, 89 feet more wall to build (to be exact), and 755 more square feet of wall to battle heat loss and heat gain. We aren't advocating box building, but dimensional considerations should have a role in the design process.

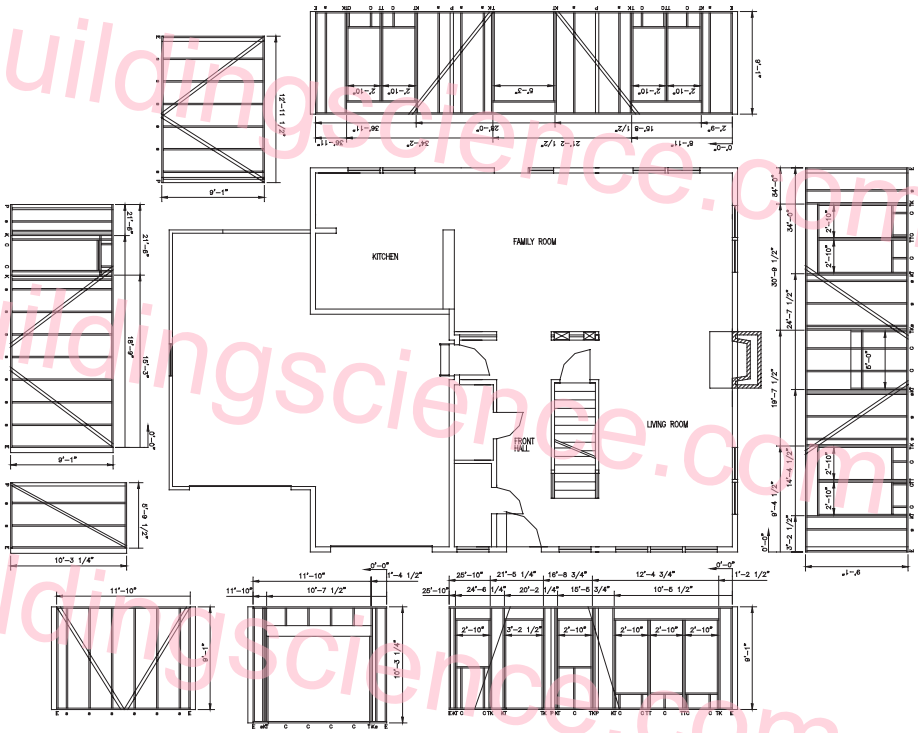

Description	2,300 Ft^2	2,500 Ft^2
Number of framed Exterior Walls	12	28
Linear Footage of Exterior Wall	314 lf	403 lf
Surface Area of Exterior Wall	2,670 ft^2	3,425 ft^2

© buildingscience.com

© 2002 Building Science Corporation

- **Integration of design with framing and the HVAC system**
  The performance, complexity and even the expense of the HVAC system can be driven by its relationship to framing layout and design, particularly with respect to duct layout. Some forethought about wall locations, direction of floor framing, and depth and type of floor framing members can result in some beautiful synergy between the framing and HVAC systems. Its absence can bring framing and thermodynamic chaos, and all for no particularly good reason. See **Figure 5** for an example.

- **Detailed framing plans**
  It pays to do detailed framing plans, both as a double-check on opportunities for efficiency gains from small design modifications back at the office, and as detailed guidance for the framers at the job site. We have found that detailed framing plans must make it to the job site, particularly when elements of efficient framing are new to the crew or crews. And, there is nothing worse than a mandate coming from the home office about efficient use of wood accompanied by designs and layouts that make efficient framing difficult, cryptic or even impossible. Detailed framing plans can make the difference. (Detailed framing plans don't hurt with local building officials either, giving them advance notice and heading off subsequent approval issues.)

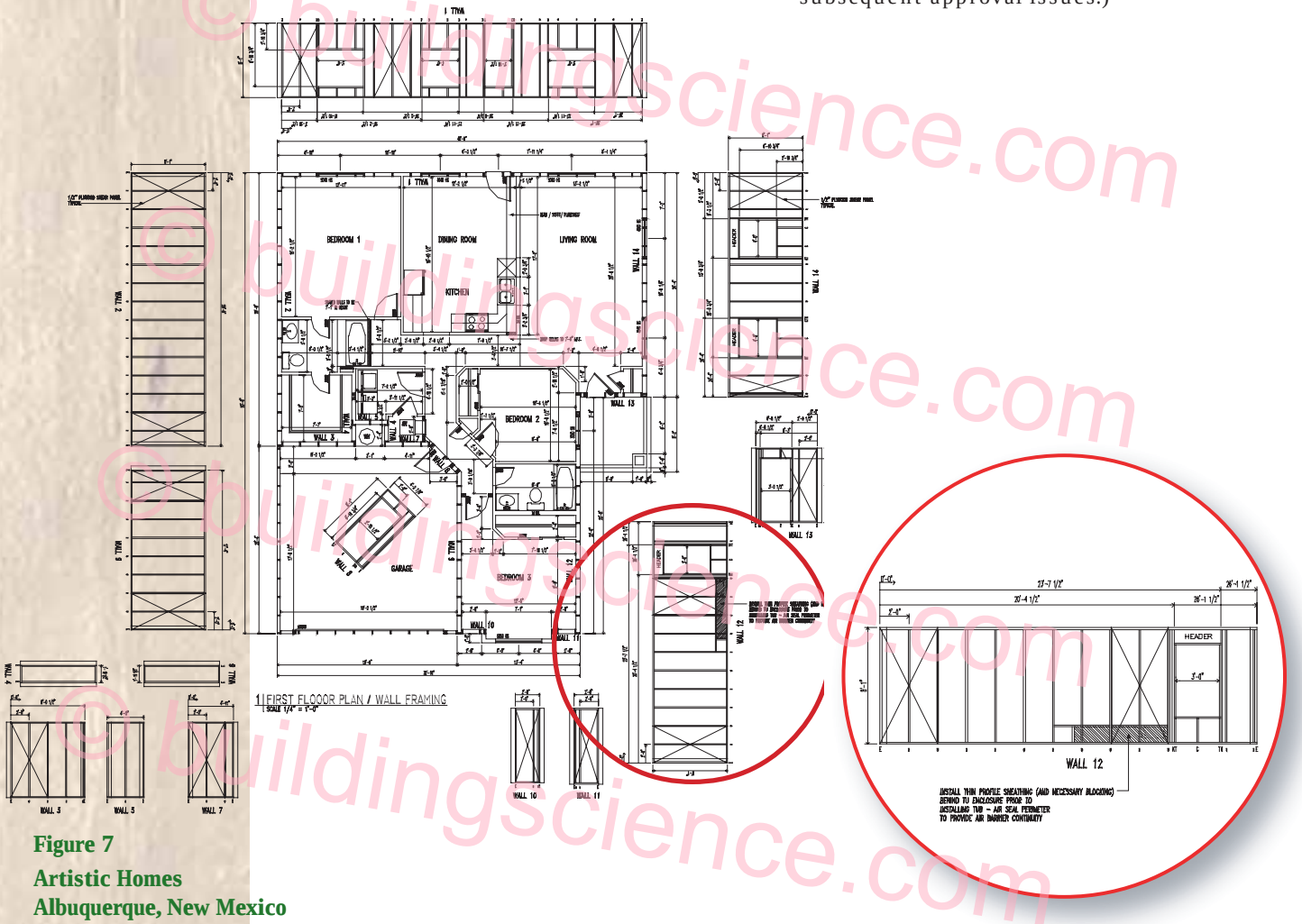

Figure 7
Artistic Homes
Albuquerque, New Mexico
1,066 homes

Although labeled by some as tedious and labor intensive, wall framing elevations have a great deal to offer. In Figure 7 the wall framing elevations show the location of all shear panels, the location of any air barriers, the location of headers (and no headers), and all the running dimensions for window layout. The elevations also offer the ability to properly estimate a material count (remember less waste).

Although relevant for all builders, wall framing elevations **really** makes sense for production builders where a house may get built twenty or thirty times. A 16 hour design effort drafting the wall elevations accounts for less than an hour per house built. The estimator and lead carpenter would spend four times that in head scratching alone without wall elevations.

© buildingscience.com

© 2002 Building Science Corporation

MATERIAL SELECTIONS AND PURCHASE

Some materials inherently make better use of wood resources than others; some materials come from inherently more resource-efficient sources. This provides two more opportunities to optimize your use of wood resources.

- **Engineered wood products (EWPs)**
  Any wood product that derives at least some of its structural properties from more than just natural wood fiber or solid-sawn lumber is an engineered wood product. They all contain adhesive or mechanical fasteners, or both. EWPs tend to be more consistent in their performance properties than their solid-sawn counterparts; less tolerant of site modifications; and more flexible in extending design beyond what is possible with solid-sawn counterparts. In recent years, many EWPs have become very competitive in price with solid-sawn counterparts.

  Because EWPs (except plywood) utilize smaller, faster-growing trees, they can relieve pressure placed on more environmentally sensitive old-growth resources. (With the exception of some pressure-laminated thin fiberboard sheathings such as ThermoPly™, no structural EWPs currently being produced utilize any recycled wood.) EWPs range from oriented strand board (OSB) to floor and roof trusses, to horizontal framing members such as I-joists, laminated veneer lumber (lvls), and glulam beams. Their use can increase spacing schedules, yield deeper framing cavities for accommodating mechanicals, and result in fewer problems with the cross-width shrinkage common in deeper solid-sawn framing members. Although it is always possible to use any wood resource inefficiently (including EWPs), EWPs generally represent the opportunity for more efficient wood use.

- **Wood products from sustainably harvested sources**
  As a renewable resource, wood has inherent resource efficiency. But there is quite a range of harvesting practices, within and beyond the United States. True renewability necessitates harvesting practices, replanting, and forest diversity maintenance that sustain the resource. There are currently four forest certification programs active within North America—the American Tree Farm System, the Canadian Standard Association's (CSA) Sustainable Forest Management Program, the **Forest Stewardship Council (FSC)** program (http://www.fscoax.org), and the American Forest and Paper Association's (AF&PA) Sustainable Forestry Initiative. Only one program—the FSC-certified program—requires third-party certification, chain of custody documentation, and product labeling; attributes that we think are crucial for long-term efficient wood use. But judge for yourself—all of the programs represent significant departures from long-standing unsustainable harvesting practices and can be compared: http://www.certifiedwood.org/index.htm. This site also includes a nationwide sourcing database for FSC-certified wood products. The availability of FSC-certified solid-sawn wood products is still limited but definitely growing; on the EcoVillage Cleveland Building America project, we had no trouble specifying FSC-certified lumber in terms of availability or impact on the budget.

© buildingscience.com

© 2002 Building Science Corporation

DELIVERY AND ON-SITE STORAGE

It's pretty easy to just lay this out in simple terms—only deliver to the job site exactly what you need and then treat the materials with respect once they arrive.

- **Waste factors**
  You always need to pad the lumber take-off with a "waste" factor, to account for bad stock and labor errors on the job site. But the question is: what waste factor is reasonable—is it 5% or 15% of the take-off? One job site proverb applies here: you send it, we **will** use it. Only you know just how closely you can set this factor, but detailed framing plans can work well with a honed-down waste factor. And some builders are experimenting with color-coding or some other way of designating stock so that there is an easy way for everyone from the site super to the carpenter's helper to know for what use each stick was intended.

- **Dunnage and Coverage**
  It's pretty amazing to see how disrespectfully lumber packages can be treated on the job site—lifts sitting in mud or puddles of water with no top cover. Why pay for kiln-dried stock and then treat it like landscaping material once it gets to the job site? The performance of wood products — particularly sheet goods — can suffer if left exposed. Protecting wood products on the job site prior to their use is cheap and simple—stick the load to keep it up off the ground and top cover. It will remind your framing crew that they work with valuable product and show your potential homebuyers how you manage what could soon be **their** materials.

Figure 8a
This is not the way to store materials on the job site.

Figure 8b
This **is** the way to store materials on the job site.

© buildingscience.com

© 2002 Building Science Corporation

FRAMING TECHNIQUES

Now to the nuts and bolts of using wood efficiently. Many of these techniques should be illustrated in your framing plans, plans that make it to the job site for crew head-scratching, or referenced in your job site framing specs by way of the appropriate **EEBA Builders Guide** (see Resources).

We see just two general principles of efficient framing:

Principle #1
Use structural grade materials to their full approved capacity. A ready example would be using 24-inch on center framing "stacked" from foundation to roof.

Principle #2
Don't use structural grade materials in non-structural applications if other materials can accomplish the required function(s). A ready example would be a drywall clip instead of an extra stud for drywall backer in outside corners.

But there is a myriad of specific ways to apply these principles. We have tried to present them here roughly prioritized in terms of relative contribution to wood efficiency:

- **Stacked framing greater than 16 inches on center**
  This technique is actually a combination of related advanced framing methods. While each can be employed individually, they do make sense to conceptualize and use as a system:

  1. increased spacing – moving from 16 in. OC to 24 in. OC represents the single largest wood framing savings. This is because it involves not only wall studs, but deep members such as floor joists or roof rafters as well.
  2. in-line framing – this means aligning, from roof to sill plate, all framing elements -rafters (or trusses), bearing wall studs, floor joists.
  3. single top plate – if bearing framing members are all aligned, the structural need for more than one top plate is eliminated. The practical need for tying together the top plates of long exterior walls or intersecting interior walls, and for straightening the tops of walls, can be accomplished with metal stitch plates.

State Department of Energy
Mantachie, Mississippi
12 demonstration homes

- **Insulating sheathing**
  Achieving required shear resistance in walls with metal band bracing instead of structural panels not only saves a lot of wood, it permits the use of continuous rigid insulation in place of OSB or plywood. This boosts overall R-value of the wall, improves air tightness, and moves the first condensing surface out of the wall assembly.

Town & Country Homes
Centennial Crossing
Vernon Hills, Illinois

- **Load-tuned headers for window and door openings**
  It's not unusual to see **all** openings in a building headed off with a one-size-fits-all header. It sure makes it easier for the framing crew, but at what a cost! It's certainly convenient to keep the depth of the header the same as much as possible, but tune the header with different materials or configurations (singling/doubling). Once again, detailed framing plans can make optimizing header configurations a relatively easy exercise for the framing crew.

GreenBuilt Homes
City infill
Cleveland, Ohio
2 prototype homes

- **Reduced use of cripples, jacks, and drywall backer studs**
  We often use structural grade two-bys for non-structural wall framing: supporting drywall at

© 2002 Building Science Corporation

corners, providing enough nailing for window and door casings, and making assembly of window rough openings a bit easier with end cripples. This can be more than just an efficient use of wood; it can mean unnecessary cold spots in exterior walls and subsequent drywall pops and cracking. The best bet is to save grade-stamped structural lumber for structural applications, and employ more value-engineered means —drywall clips, ladder backing, etc.— to support other functions.

- **Truss or EWP roof framing**
  Using solid-sawn lumber for roof framing is often a question of regional preference or convention. But with truss plants now operating in every region of the country, and I-joists that can work as well tilted up as lying flat, the number of applications that require the use of solid-sawn deep roof framing should be nearly nil.

- **Two-foot modular design and layout**
  Starting with foundation layout, the house footprint can be based on two-foot increments, often with significant savings in both framing members and sheathing and always with a lot less waste. We only list this last because work by the NAHB Research Center a number of years ago found that the wood savings can be very dependent on the starting dimensions.

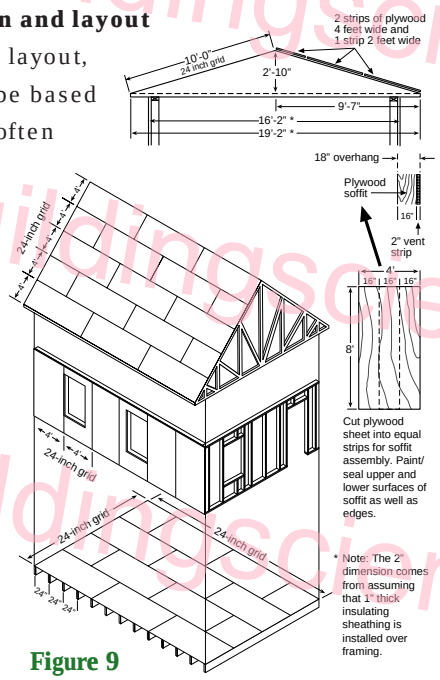

Figure 9
Efficient material use by design

- **Inset shear panel**
  Here is a great example of when thinking "outside the box" really means "inside the frame!" All homes regardless of location require some level of shear resistance. Builders in active seismic and high wind zones have two particular advanced framing problems:

  1. Shear resistance requirements mean that high performance builders can't reasonably use continuous insulating sheathing in place of plywood or OSB panels.

  2. The same shear resistance requirements often mean that expensive, proprietary, manufactured shear panels, such as Simpson Strong-Wall Shearwalls, or Hardy Frame, panels, must be used.

As a part of the Building America program, and working with Pulte Homes of Tracey, CA; the Army Corps of Engineers' Civil Engineering Research Laboratory (CERL); and ATI Architects and Engineers; Building Science Corp. has successfully developed, tested, and field-installed innovative **inset** shear panels that can be site- or shop-assembled.

The panels are designed to fit right into the advanced framing approach—two by six walls framed 24 in. OC with single top plate and stacked framing. And, because the panels are inset, continuous rigid insulating sheathing can be employed. The result is a high-performance framing assembly, both in terms of shear and energy performance. The estimated construction cost of site-building one 4 by 8 inset shear panel is approximately $100 to $150, far less than the cost of the manufactured panels. Shopbuilding these panels would bring economies of large scale production and lower their cost even further. A BSC application for an International Conference of Building Officials (ICBO) Evaluation Service Report, key to comprehensive building code acceptance of the inset shear panel, is pending.

Pulte Homes has employed the inset shear panels in two prototype homes and is using the panels at Beacon Point in 74 homes currently under construction.

Figure 10

In this one photograph from a Building America project at in the mid-West, there are FIVE efficient framing techniques. See if you can name them and check your answers against the list in the footnote*.

* load-tuned header, in-line framing, 24-inch OC, single top plate, and open-web trimmable floor truss

© 2002 Building Science Corporation

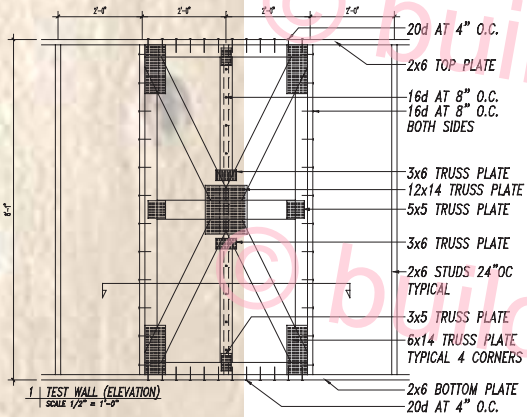

Figures 11

Shown here is the shop drawing, structural testing, and field installation of an early prototype of an inset shear panel. The panel was used successfully in a Pulte home in Jacksonville, Florida, under the Building America program. Note the continuous rigid insulation sheathing. This prototype led to the development of the panel illustrated below (Figure 11).

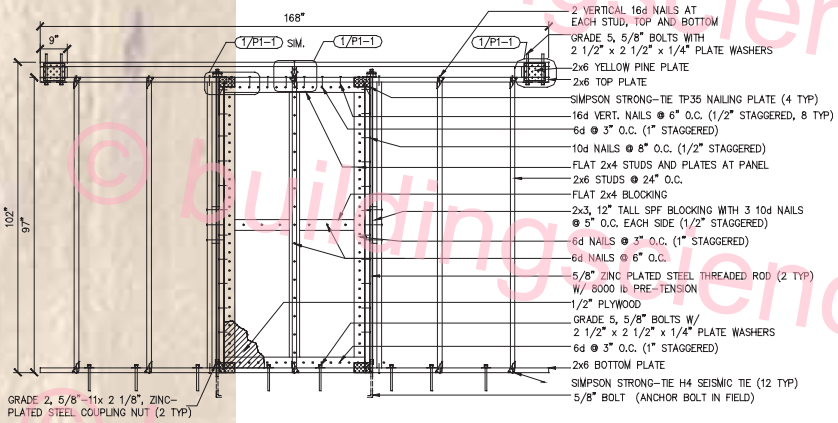

Figures 12

Shown here is the two-story structural testing, shop drawing, and field installation of the inset shear panel submitted for ICBO. The photo of a Building America home in Juneau, Alaska shows the real meaning of "picture perfect framing!"

© buildingscience.com

© 2002 Building Science Corporation

WOOD EFFICIENCY: IT'S NOT JUST ABOUT THE FRAMER

There are a lot of really top-notch builders out there who feel this way about efficient framing:

"The architect and framer better not fine-tune the framing too much; you have to build in quite a bit of slack to make up for what will happen when the plumber, electrician, HVAC contractor and drywaller are done with it."

That's why the Building America approach to wood efficiency is so important — it's an integrated systems approach in which ALL of the trades and the systems in the home for which they are responsible have to work together. Trades that run things under, through and around the framing — plumbers, electricians, insulators, and HVAC technicians — need to understand and work with the framing plan just as much as the framing crew does.

As with so many things in a system as complex as a home, you must always look at one facet of efficiency from the perspective of — **overall** efficiency.

Artistic Homes
Albuquerque, New Mexico
850 built homes per year

The trades work together to build high performance homes at Artistic. Note that:

1. a drywall strip has been installed at the top of the hallway walls
2. hallway end walls (with bottom plates spray-painted orange) have been built and set aside.

This cooperation among three trades allows the HVAC contractor to construct and easily air seal all around the hallway trunk duct at ground level. He then installs the duct as one assembly with hangers, and the 7-foot end wall partitions are installed after the HVAC installation is completed. That's integrated design and implementation at the job site (not to mention the efficient wood use shown here -- 24-inch o.c., in-line framing, single top plate, optimized headers and finger-jointed studs).

© buildingscience.com

© 2002 Building Science Corporation

"WASTE – THE CONSTRUCTION TAILPIPE"

At the end of the day no matter how efficient our use of wood, there will be some waste—off-cuts from both solid-sawn lumber and sheathing. Even for the most efficiently framed buildings, wood waste will be one of the largest components of the new construction waste stream.

There is some good news and some bad news about new construction wood waste. The good news is that it tends to be relatively clean, dry, and homogeneous (On the typical job site it's about half solid-sawn and half sheet good, usually OSB). These are usually good attributes for recycling. The bad news is that markets that might make good use of this material—mulch for landscapers, hog fuel for industrial boilers and wood-fired electric utility plants, and bulking agents for composting operations—are generally poorly developed.

So, BSC has been working on two alternatives to landfilling wood waste, both involving keeping the material on the job site, turning it into a resource.

- **The Site-Engineered Environmental (SEE) stud**

  Consider the following:

  1. About 100 two-by-fours used on a typical residential job site are for non-load bearing interior partitions. Regardless of the residential building code under which you are operating, using structural-grade stock in this application seriously violates Principle #2 (see page XX).

  2. Take a look at the wood waste in your pile or dumpster — we will bet that a lot of the OSB is in relatively big pieces from window/door cut-outs and roof off-cuts. And quite a bit of the solid-sawn will be two-by-four off-cuts 16 inches or longer.

You can see where this is going with the drawing below.

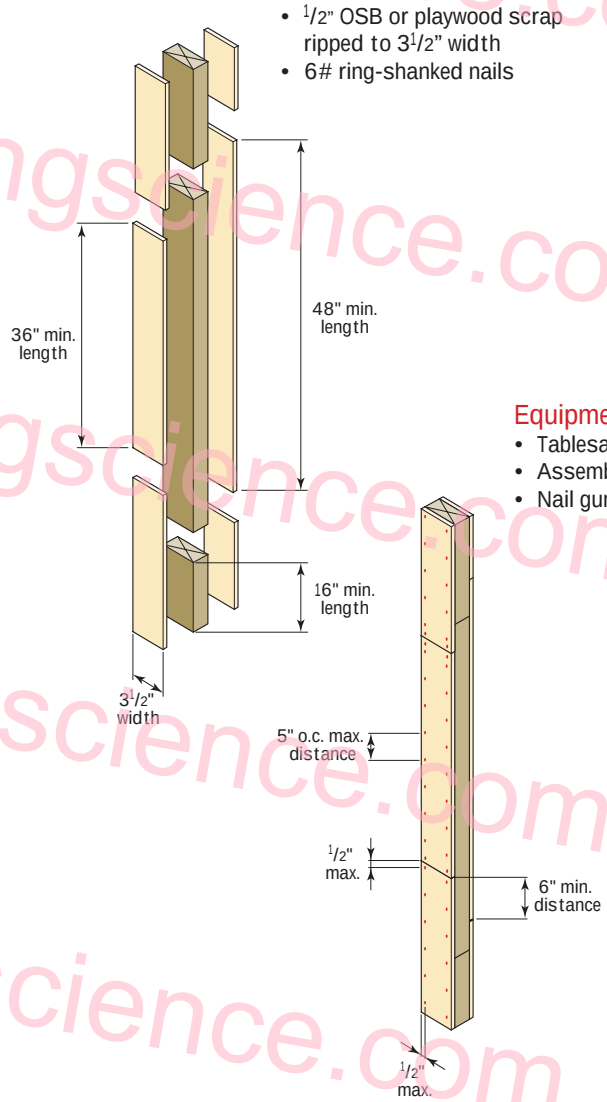

© buildingscience.com

© 2002 Building Science Corporation

To date, we have found that if you keep at least one of the OSB 3 1/2-inch strips centered along the length of the stud and at least 36 inches in length, you will get studs stiff enough to satisfactorily frame interior non-load bearing walls. With nails every 4 to 6 inches and clustered around any OSB and two-by joint, the length of stud core scraps does not seem to matter much. Although SEE studs are heavier (and wider) than a regular stud, they are always straight and can be nailed, drilled, and take fasteners just like a regular stud. All that from wood waste out of your dumpster. And rest assured, there is enough OSB and stud scrap generated in the US for every non-load bearing stud to be a SEE stud.

Figure 13a
Students at the Max Hayes Vocational High School in Cleveland, Ohio build prototype SEE studs as part of the process of gaining builder and building official approval for SEE stud use in the Building America project, EcoVillage Cleveland townhomes at 58th St.

- **On-site grinding**

If you can grind your wood waste into 2.5-inch "minus" (meaning less than or equal to) wood chips, it makes a great soil erosion control mat at job-site entrances or bermed at the base of silt fences in areas where significant surface flow is likely. Turns out that there are now at least two commercially available grinders appropriate for residential job sites, grinders that handle drywall as well as wood waste. A new BSC **Building America partner** is **Packer Industries** of Atlanta, Georgia, manufacturer of one of the low-speed, mobile grinders well suited to this task. Building America production builders in Albuquerque, New Mexico and Minneapolis, Minnesota are finding this approach to dealing with their wood and drywall waste competitive with traditional disposal. Limited research has shown the benign contribution of adhesives in EWPs in this application, and there is ongoing research in Georgia double-checking the impact of adhesives when construction wood waste containing EWPs is ground and used as a topical material.

Figure 13b
Students and an instructor measure the deflection created by loading the 8-foot length of a SEE stud with a 35-pound concrete block. The deflection of the SEE stud was compared to that of a standard two-by-four turned sideways. The 2000 International Building Code (IBC) accepts studs with the long dimension parallel to the wall (sideways) at 28-inch o.c. for non-load bearing interior partitions.

Figure 14a
Artistic Homes of Albuquerque, New Mexico uses a Packer 750 to grind all of its clean wood, cardboard, and drywall. They have reduced their construction waste by an estimated 75% to 80%. Artistic Homes projects that disposal cost savings will pay for the Packer 750 in just 3 years.

Figure 14b
Most of the ground construction wood waste at Artistic Homes is currently being gobbled up for use by residents and other locals for use in landscaping.

© buildingscience.com

© 2002 Building Science Corporation

Building high performance homes is all about **providing construction details** that demonstrate the building science and how it is applied at the job site. The details shown here are taken from the building science resources, the EEBA Builder Guides and the BSC web site resource Houses That Work. The photos show each detail being applied at one or more Building America project. The point is -- try them, they work.

Metal Strap

In an effort to achieve continuity of insulating sheathing (thermal barrier and exterior air barrier), many builders choose to manage shear resistance by using metal strapping. The two examples here are Prairie Crossing in Grayslake, Illinois (top) and Venture Inc. in Pontiac, Michigan (bottom). Note the use of airtight electrical boxes.

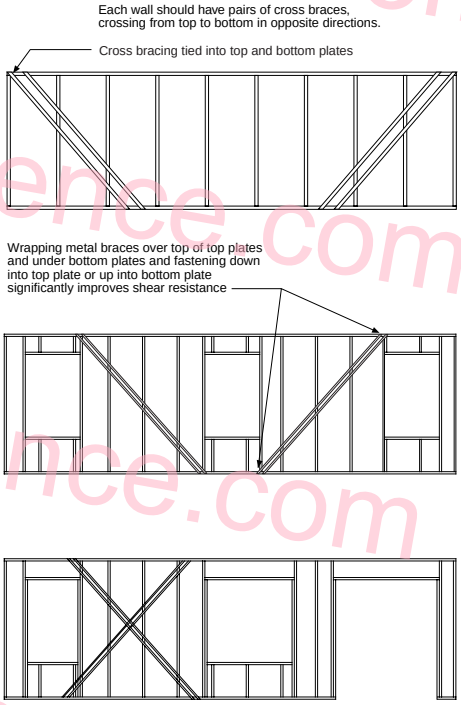

Stack Framing

To gain the most benefit from advanced framing, the concept of "stack framing" (vertical alignment of stud, joist, and roof truss) is utilized. Even balloon framed walls in two-story spaces, such as this one in a Town and Country home in Vernon Hills (bottom), can take advantage of advanced framing using the stack framing concept. Note the headers (actually, the lack thereof), the location of OSB shear panels, and the use of insulating sheathing.

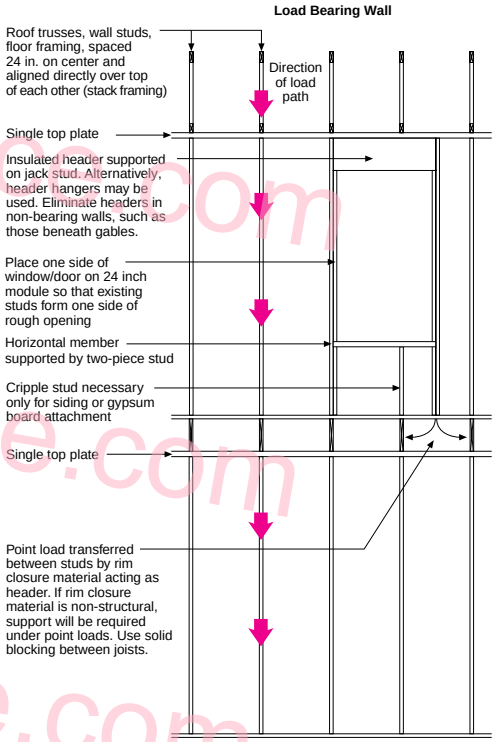

© buildingscience.com

© 2002 Building Science Corporation

Two stud corner

Two stud corners allow full insulation placement in the corner of the framed wall and also allow for floating drywall corners, reducing drywall cracking. Traditionally framed walls create cold uninsulated corners with potential for drywall cracks. The photograph at right is from Prairie Crossing, Grayslake, Illinois.

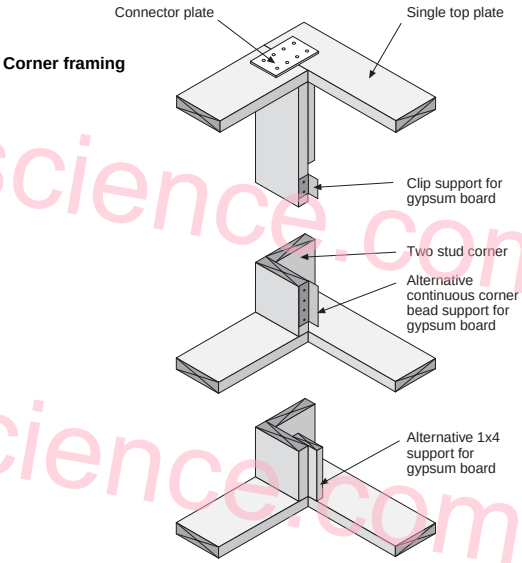

Insulated headers

Insulated headers can be either manufactured or site built. The manufactured type (top right from Prairie Crossing, Grayslake, Illinois) typically comes in long lengths cut on site as required. The site built (bottom left from Artistic Homes, Albuquerque, New Mexico) or recessed header has two advantages: First, the recessed space allows for added insulation. Second, it prevents machine gun attachment of drywall that typically results in drywall cracking.

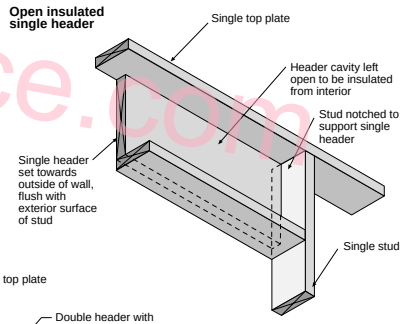

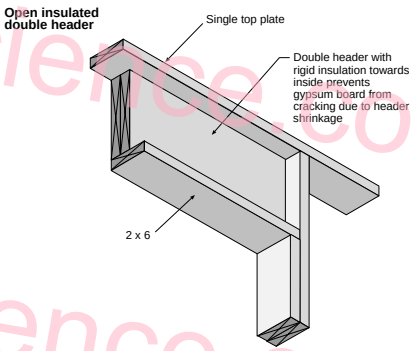

Single top plate

The "stack framing" concept allows for the use of single top plates. The use of single top plates reduces material cost as well as increases the amount of wall cavity for insulation installation. Photograph at right from Metro Denver Habitat for Humanity, Denver, Colorado.

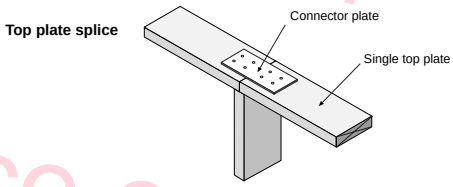

Set back rim

In platform construction the band joist area complicates effective insulation installation. To counter the complexity, many builders (especially cold climate regions) choose to use an inset rim detail. The inset rim permits added insulation in a continuous, easily installed application. The photograph at right is from Centex Homes, Allegheny Grove, Minnetonka, Minnesota.

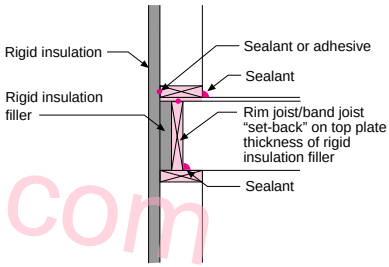

© buildingscience.com

© 2002 Building Science Corporation

Air barrier continuity at fireplace

Improperly installed manufactured fireplaces can dramatically challenge the effectiveness of a home's air barrier. In most cases, the surrounding walls and ceiling that make up the fireplace enclosure are partitions dividing conditioned space and unconditioned space, basically an exterior wall. Yet most often, they do not receive the same attention as an exterior wall. These walls should not only be insulated, they should be sheathed and air sealed as part of air barrier continuity. The photograph at right is from Hans Hagen Homes in Fridley, Minnesota.

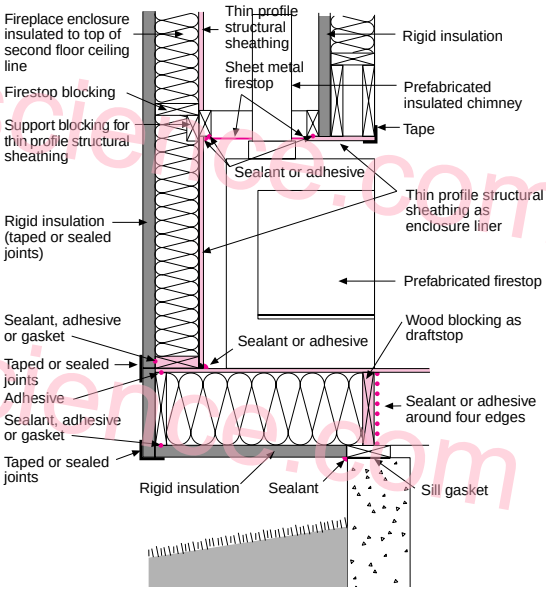

Air barrier continuity at interior soffits

Although the space within the soffit is closed access, this space also is part of the home's conditioned space. Areas dividing conditioned and unconditioned space should receive proper detailing to achieve the home's air barrier continuity. Failure to maintain air barrier continiuty here wastes energy and may allow warm, moist air condensation on ducts in air conditioned houses. Interior solid blocking draftstops, like the photo at right, are employed at Building America's Prairie Crossing project, among others.

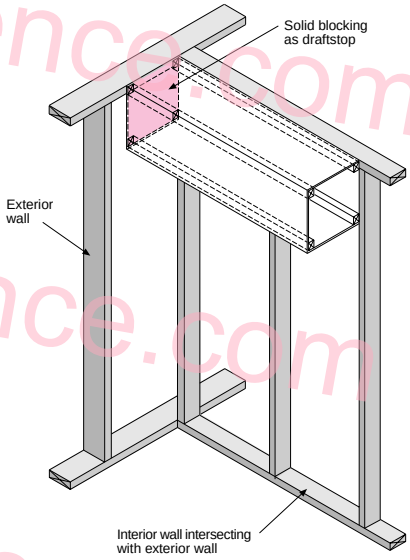

Plumbing penetrations

Any pipe traveling from conditioned space into unconditioned space should be properly sealed at the penetrating location to maintain the home's air barrier continuity. The photograph at right is from one of the demonstration homes in Mantachie, Mississippi.

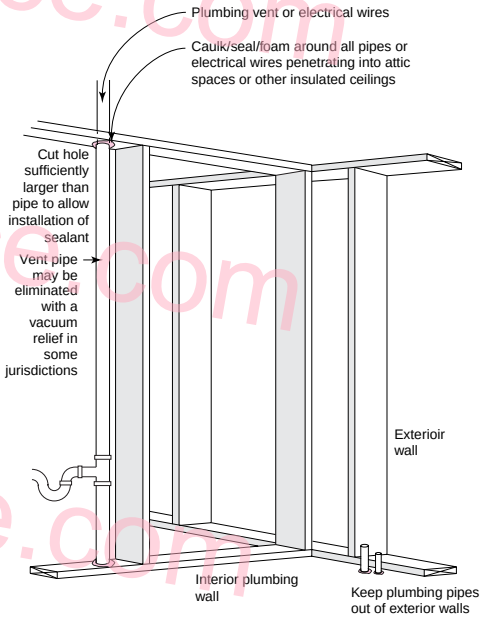

© buildingscience.com

© 2002 Building Science Corporation

Electrical penetrations

Any wire or conduit traveling from conditioned space into unconditioned space should be properly sealed at the penetrating location to maintain the home's air barrier continuity. The photograph at right is from one of the demonstration homes in Mantachie, Mississippi.

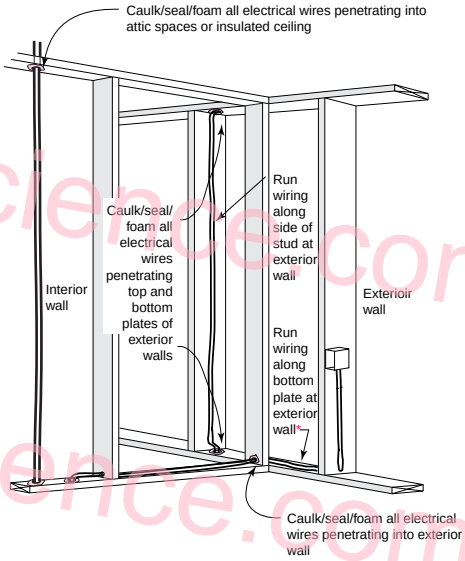

Drywall clip

Ceilings, intersecting partitions, and corners are all opportunities for drywall cracking. Likewise, these areas are also opportunities for the use of drywall clips. Drywall clips create "floating" drywall intersections, which allow for the differential movement of the drywall and its wood support member. This reduces the stress on the drywall and hence reduces drywall cracking. And remember, less wood = more insulation. The photographs at right are from one of the demonstration homes in Mantachie, Mississippi.

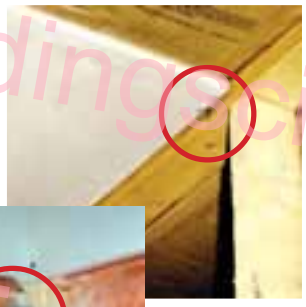

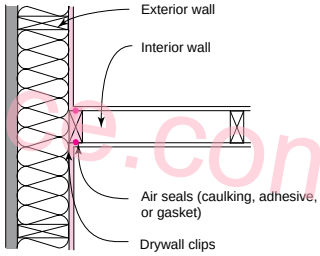

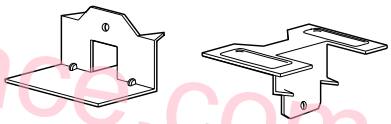

Slotted anchors

As stresses are applied to a trussed roof's framing system, the bottom chord will move. Improperly attached drywall also receives this stress and cracks. Slotted anchors with floating drywall corners allow the bottom chord to move independently and simply bend the drywall with the truss's movement, not crack it. The photograph at right is from The Shores at Hidden Lake, a Pulte Homes, Northern California Division development in Tracy, California.

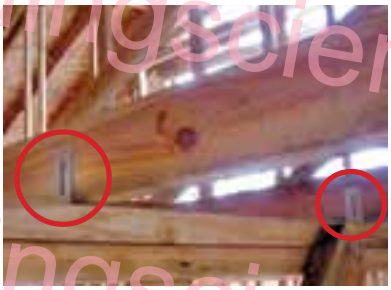

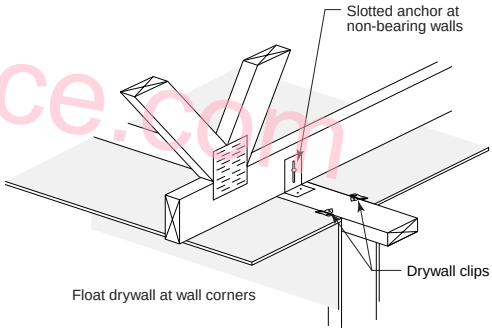

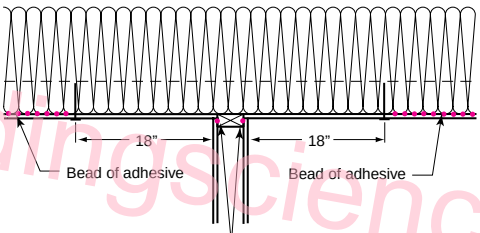

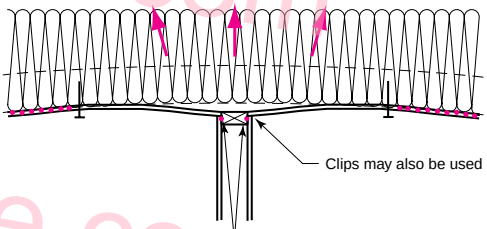

© buildingscience.com

© 2002 Building Science Corporation

WOOD EFFICIENCY AND BUILDING SCIENCE

Ultimately, you can only use wood efficiently if it **lasts**. The way that heat, moisture, and air move — or are restricted from moving — through wood assemblies will determine whether the structure lasts for ten or one hundred years. Wherever the structural framing assembly also is a part of the structure's thermal barrier, air barrier, vapor retarder, or drainage plane, the framing's long-term service life is a function of how the entire assembly performs with respect to the flow of heat, water and vapor.

That's why the Building America approach requires that efficient wood use be accomplished in the context of how the building envelope performs. ALL of the materials in wall, roof and floor assemblies—building paper, cavity insulation, even paint—must be selected for their **combined** thermal and moisture performance. Homes built without this integrated approach that last say, just twenty-five years, would have to be built four times more efficiently than a home that last one hundred years, just to break even in wood use!

CASE STUDIES

In an effort to fully demonstrate the advantages of using wood efficiently, from optimizing the design and engineering to minimizing the waste stream, **Building Science Corporation** has prepared a number of advanced framing case studies. Each case study demonstrates optimum design characteristics as they specifically pertain to a **Building America** development.

© buildingscience.com

© 2002 Building Science Corporation

A Closer Look at Their Typical Framing Practices

Denver is a cold climate with a regional practice of using 2x4 exterior wood walls, and all framing members are placed on 16" centers. This regional practice is strictly adhered to by the local building community, providing an ideal opportunity for any builder to take a leadership role with advanced framing and advanced envelope design. The Engle Homes case study illustrates the resource and energy efficiency gains associated with advanced envelope design and advanced framing.

House Specifications

- 2 story with a 42'x30' footprint
- 2,278 total ft^2
- 8'-1" first floor wall height
  8'-1" second floor wall height
- 310 linear feet of exterior wall

Climate Considerations

"Cold" climate

Heating degree days	6,023
Heating design temp.	- 3°F
Cooling design temp.	93°F

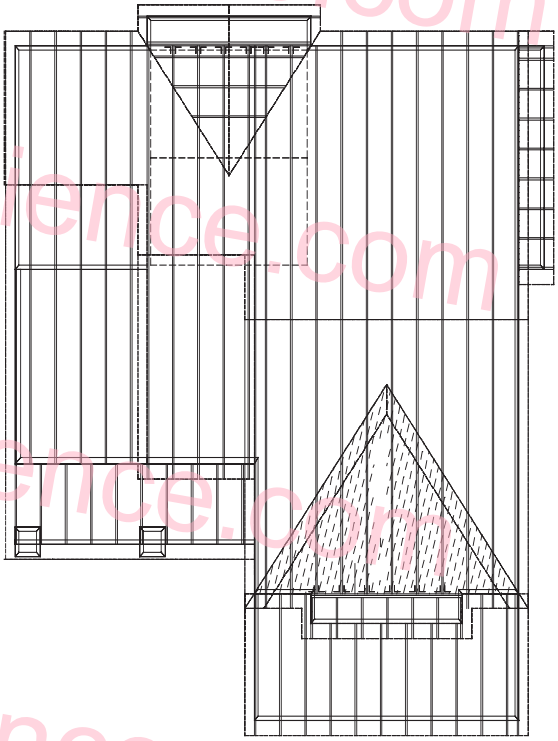

Roof framing plan with trusses at 24" o.c.
Model 2278

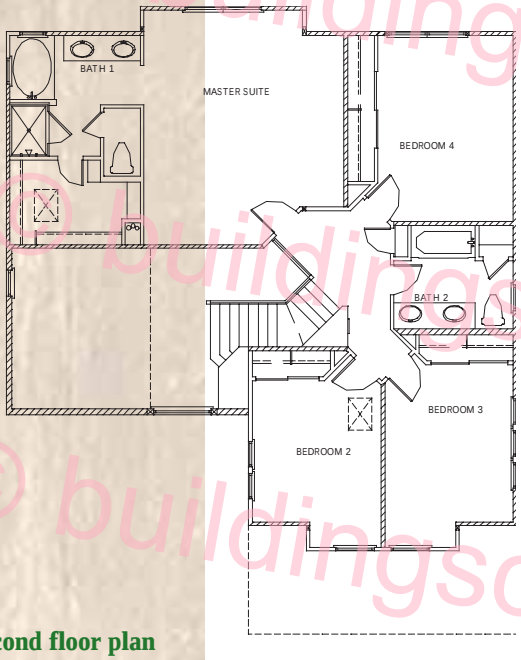

Second floor plan
Model 2278

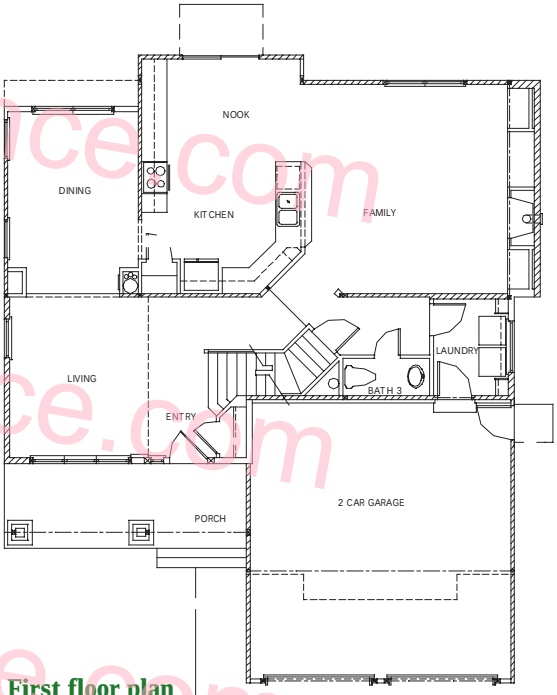

First floor plan
Model 2278

© 2002 Building Science Corporation

Right elevation
Model 2278

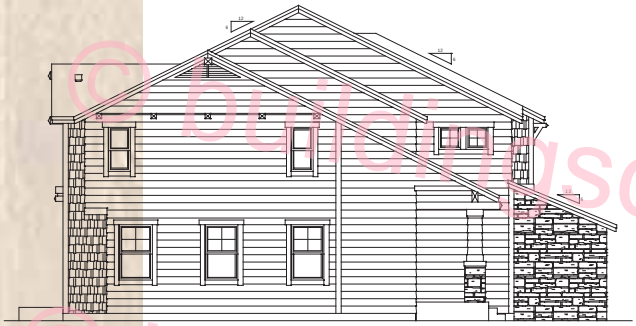

Left elevation
Model 2278

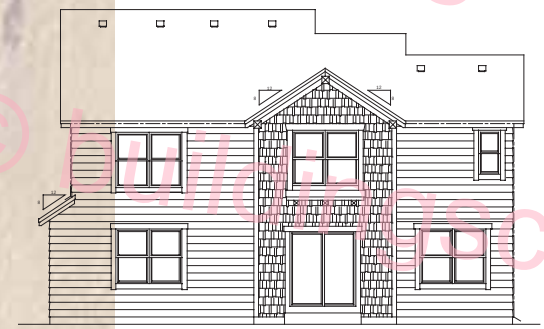

Rear elevation
Model 2278

Front elevation
Model 2278

ENGLE HOMES MODEL 2278 SUMMARY INFORMATION

Wall Area Distribution Summary

(see page 17)

Wall type	Opaque area	Window area	Cavity area
2x4(6) 16	24%	16%	60%
2x6 24 OVE	14%	16%	70%

Gross wall area = 2,630 ft^2

Window area = 408 ft^2

Wall Framing Wood Distribution Summary

(see page 19)

Wall type	Wall studs	Plate	Cripples	Headers
2x4(6) 16	$828	$235	$68	$167
			Total =	$1,298
2x6 24 OVE	$706	$198	$41	$76
			Total =	$1,021

Wall Framing / Performance Summary

2x4(6) 16	2x6 24 OVE	
713 studs	364 studs	
2,498 board feet	2,003 board feet	
$1,298	$1,021	$277 savings
Insulation		
Assumed R-13	Assumed R-19	
Actual R-9	Actual R-15	
OSB w/ housewrap	1" XPS Actual R-20	
$2,118	$1,862	$256 savings and 222% improvement

Floor Framing / Cost Summary

(see page 20)

16" floor framing	24" floor framing	
1,640 linear feet	1,080 linear feet	
$2,297	$1,651	$646 savings
$^3/_4$" floor sheathing (2,250 ft^2 of floor sheathing)	$^7/_8$" floor sheathing	
$1,014	$1,485	$472 increase
	Net savings = $174	

Estimated Cost Saving Summary

Advanced wall framing (OVE)	$277
Advanced floor framing	$174
Total estimated savings	**$451**

© 2002 Building Science Corporation

BEFORE

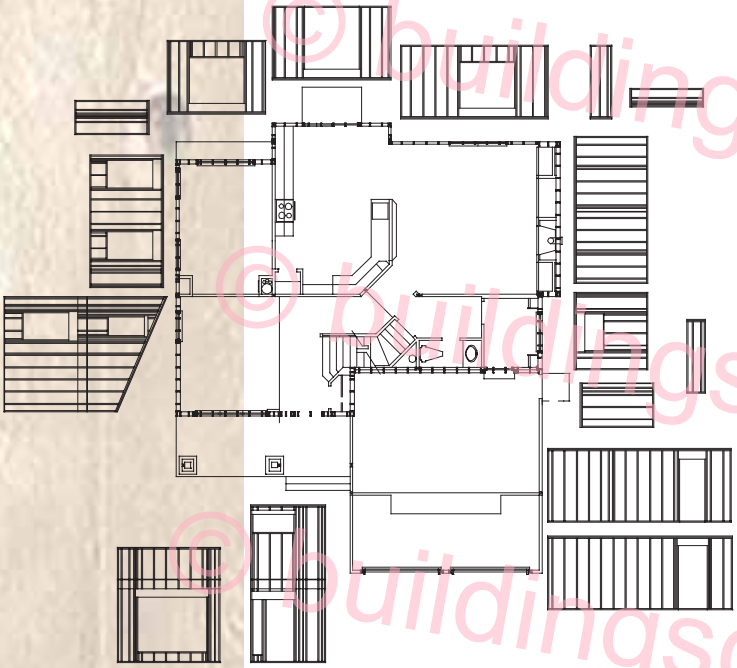

First floor plan with wall framing elevations

- Current practice is 2x4 (6) 16” o.c.

BEFORE

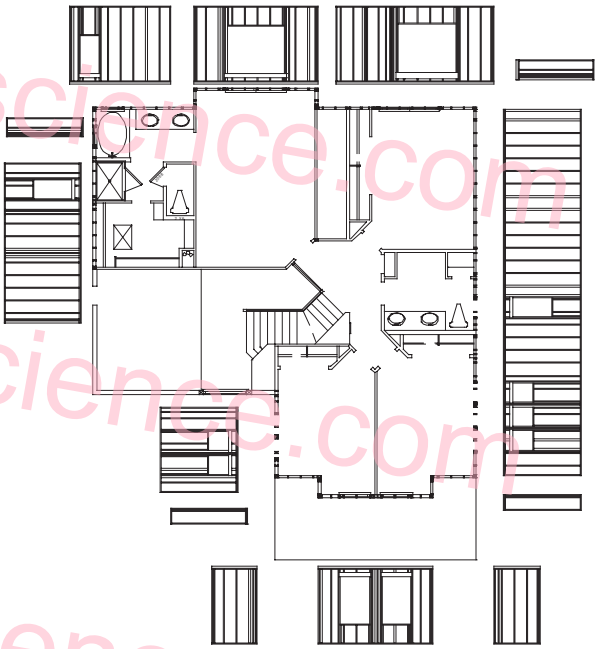

Second floor plan with wall framing elevations

- Current practice is 2x4 (6) 16” o.c.

AFTER

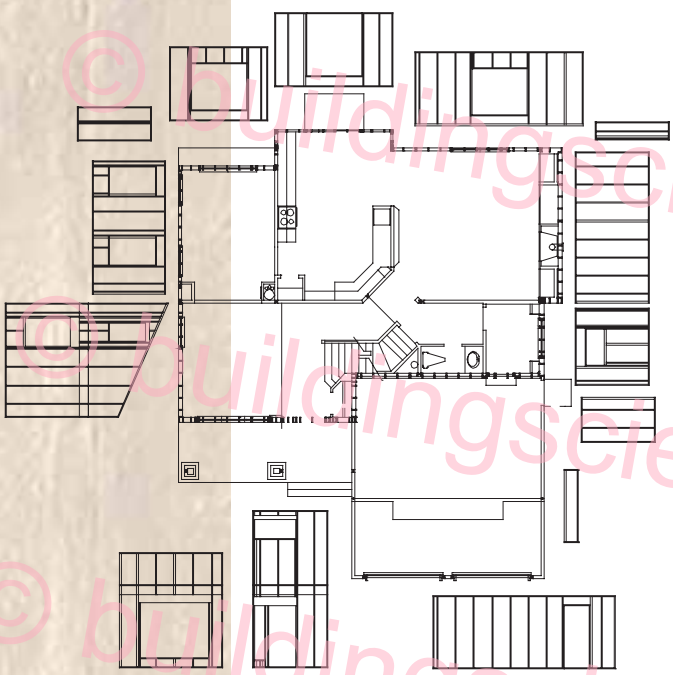

First floor plan with wall framing elevations

- Building Science Corporation analysis is 2x6 24” o.c.

AFTER

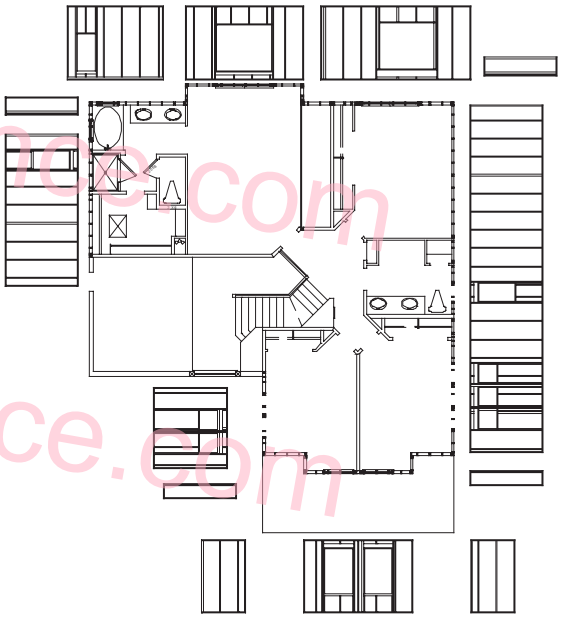

Second floor plan with wall framing elevations

- Building Science Corporation analysis is 2x6 24” o.c.

© buildingscience.com

© 2002 Building Science Corporation

BEFORE

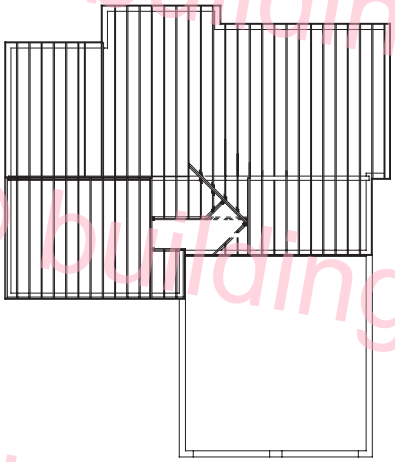

First floor framing plan
Current practice is 16” o.c. for a total of 806 linear feet

BEFORE

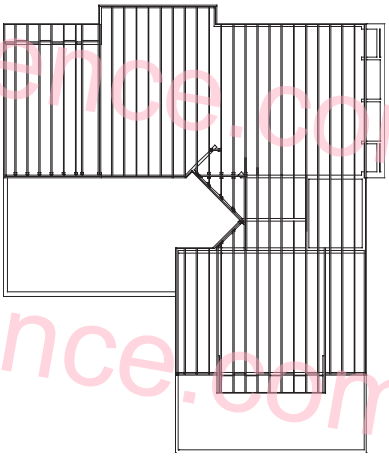

Second floor framing plan
Current practice is 16” o.c. for a total of 834 linear feet

AFTER

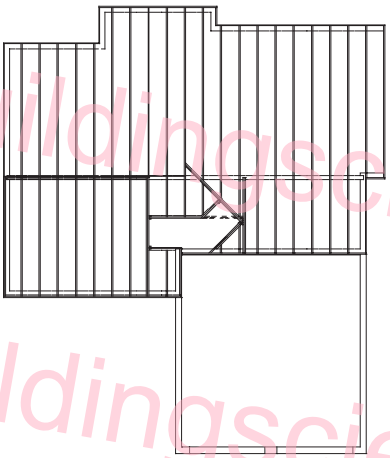

First floor framing plan
Building Science Corporation analysis is 24” o.c. for a total of 526 linear feet

AFTER

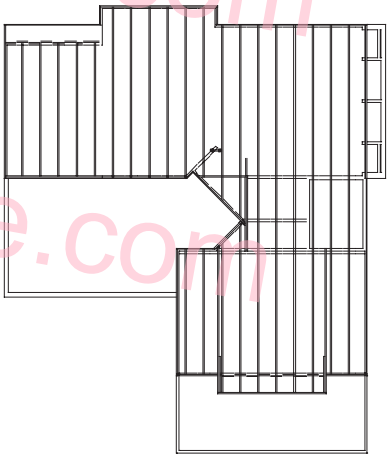

Second floor framing plan
Building Science Corporation analysis is 24” o.c. for a total of 554 linear feet

© buildingscience.com

© 2002 Building Science Corporation

CENTEX HOMES CASE STUDY

Applying Re-Engineering and Advanced Framing Concepts to the "Cedarcrest" Model

Much of Minnesota is considered a very-cold climate, making heat loss a predominant concern. Regional practice is typically 2x6 exterior wood walls and all framing members are placed on 16" centers. Although some builders stray from regional practice and provide some aspect of advanced framing or envelope design, it is not as common as one would expect given this harsh climate. For Centex Homes, no floor framing comparison was needed to convince them of the benefits of advanced floor frame design. Easily accepted, the design an installation flexibility of open web floor trusses at 24" o.c. are appreciated by both Centex architects and their trade contractors.

House Specifications

- 2 story with a 28'x36' footprint
- 2,040 total ft^2
- 9'-1" first floor wall height
  8'-1" second floor wall height
- 256 linear feet of exterior wall

Climate Considerations

"Very-cold" climate

Heating degree days	8,010
Heating design temp.	- 16°F
Cooling design temp.	91°F

BEFORE

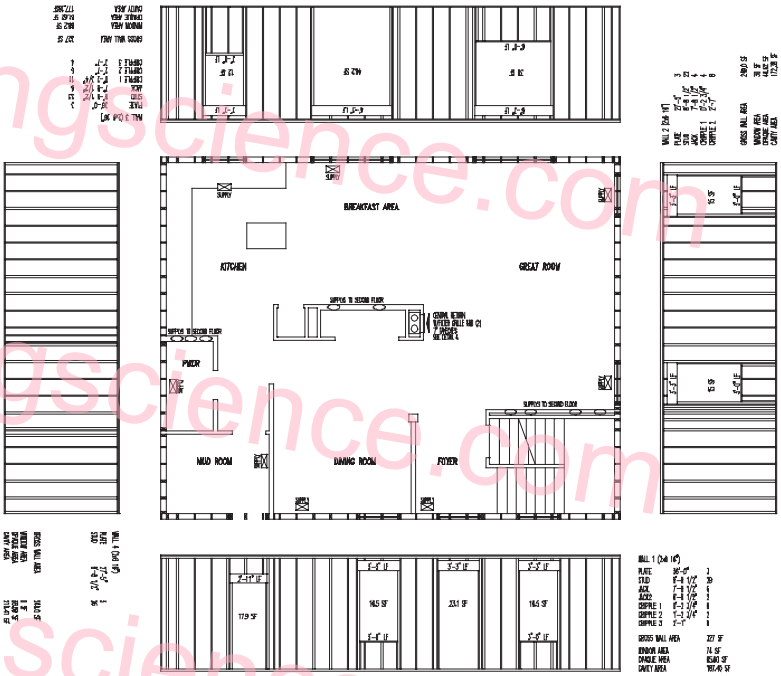

First floor plan with wall framing elevations
Current practice is 2x6 16" o.c.

AFTER

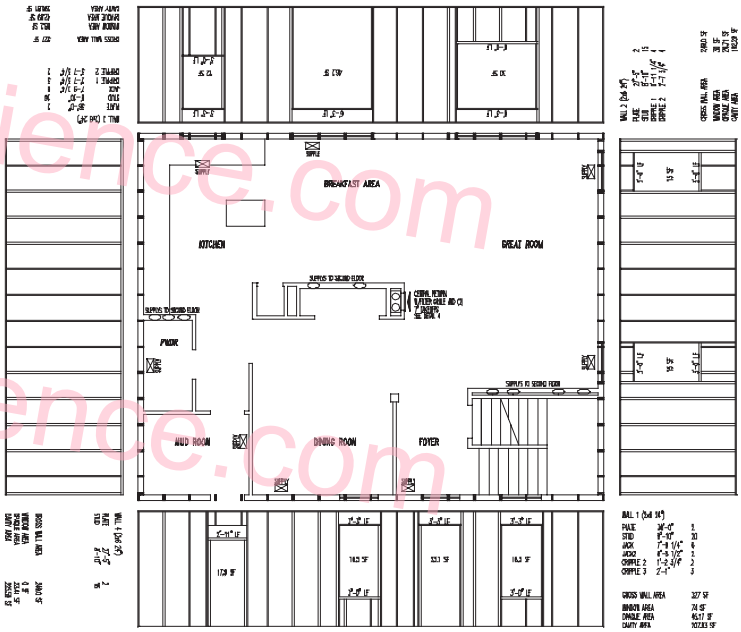

First floor plan with wall framing elevations
Building Science Corporation analysis is 2x6 24" o.c.

© buildingscience.com

© 2002 Building Science Corporation

BEFORE

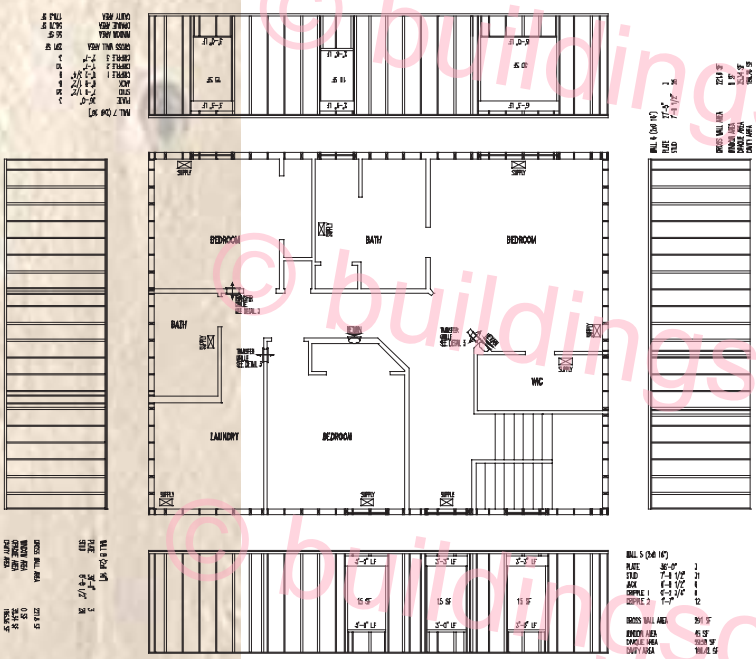

Second floor plan with wall framing elevations
Current practice is 2x6 16" o.c.

AFTER

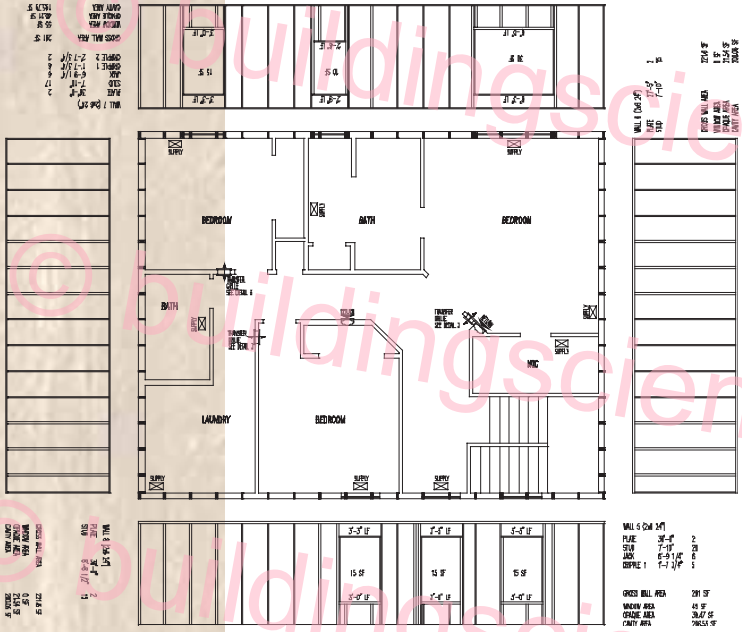

Second floor plan with wall framing elevations
Building Science Corporation analysis is 2x6 24" o.c.

CENTEX HOMES "CEDARCREST" MODEL SUMMARY INFORMATION

Wall Area Distribution Summary

Wall type	Opaque area	Window area	Cavity area ≈ 150 ft²
2x6 16	19%	13%	68%
2x6 24 OVE	12%	13%	75%

Gross wall area = 2,178 ft²

Window area = 292 ft²

Wall Framing Wood Distribution Summary

Wall type	Wall studs	Plate	Cripples	Headers	Total
2x4(6) 16	$633	$282	$125	$146	**$1,186**
2x4 24 OVE	$411	$188	$93	$49	**$ 741**
Savings	**$222**	**$94**	**$32**	**$97**	**$445**

Wall Framing / Performance Summary

2x4(6) 16	2x6 24 OVE	
400 studs	249 studs	
2,197 board feet	1,373 board feet	
$1,186	**$741**	**$445 savings**
Insulation		
Assumed R-19	Assumed R-19	
Actual R-13	Actual R-16	
1/2" fiberboard w/ housewrap	1" XPS Actual R-20	
$2,176	**$1,863**	**$313 savings**

© buildingscience.com

© 2002 Building Science Corporation

PULTE HOMES CASE STUDY

While the two prior case studies were based on computer modeling, this case study was based on field counts in an actual house. This house is in a predominantly cooling climate — advanced framing saves money in the framing materials and downsizing of air conditioning equipment. Because of their success with this and one other prototype home, a new Pulte Building America development of 74 homes — Beacon Point — has been re-engineered with advanced envelope design and framing including the innovative inset shear panels (see **Figure 10**).

House Specifications

Conditioned floor area	2,495 ft^2
Total floor area	2,910 ft^2
Typical wall height	9'-11 $^1/_2$"
Total conditioned volume	24,850 ft^3
Length of exterior wall	252 linear feet
Length of interior wall	340 linear feet

Climate Considerations

"Mixed-humid" climate	
Heating degree days	3,000
Heating design temp.	40°F
Cooling design temp.	97°F

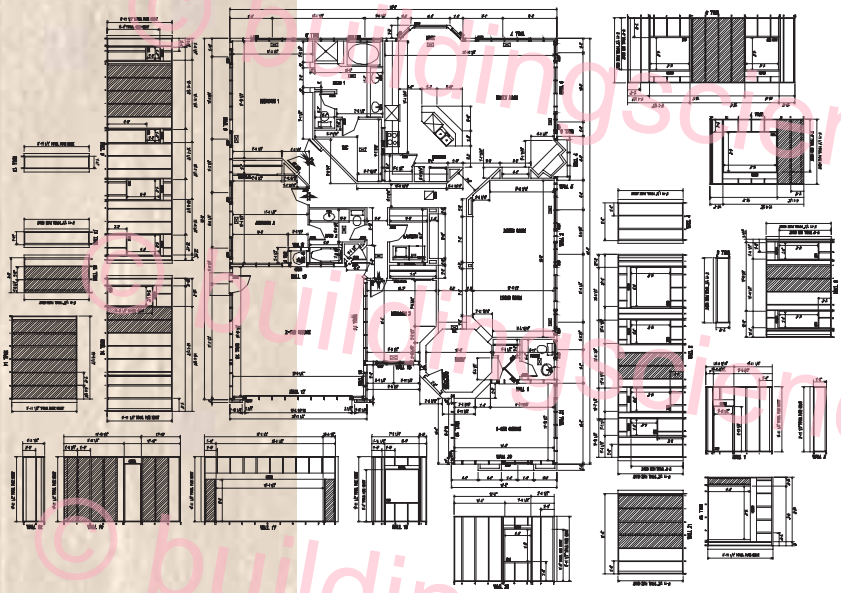

PULTE HOMES SUMMARY INFORMATION

2x4 16" O.C. Wall

	8' studs	Board feet	Cost
Exterior wall	467	1,634	$866
Exterior plate	95	331	$175
Interior wall	715	2,502	$1,326
Interior plate	126	446	$237
Header		273	$145
Total wall frame cost			**$2,749**

2x6 24" Advanced Frame Wall

	8' studs	Board feet	Cost
Exterior wall	238	1,312	$695
Exterior plate	63	347	$183
Interior wall	279	977	$518
Interior plate	85	298	$158
Header		148	$ 78
Total wall frame cost			**$1,632**

Wood Frame Wall Summary

	2x4	2x6	Reduced by
8' studs	1,403	665	(-735/-52%)
Board feet	5,186	3,082	(-2,104/-40%)
Cost	**$2,749**	**$1,632**	**(-$1,117/-40%)**

Builder initial cost savings

≈ $1,117 (framing)

Homeowner saves

≈ $ 293 (annually)

Environmental impact

≈ 40% less energy

≈ 2,104 board feet of lumber or 738 — 8'-0" studs

≈ 1,490 lbs. carbon emissions

© buildingscience.com

© 2002 Building Science Corporation

Exterior Wall Breakdown

Gross area of wall	2,098 ft^2	
Gross area of window/door	322 ft^2	15%
Opaque area of 2x4 16” o.c. frame	504 ft^2	24%
Opaque area of 2x6 24” o.c. frame	254 ft^2	12%
Cavity area of 2x4 16” o.c. frame	1,271 ft^2	61%
Cavity area of 2x6 24” o.c. frame	1,522 ft^2	73%

R-Value Truths

2x4 16” o.c. walls		
• Assumed center of wall	13.0	
• Whole wall R-value	9.4	72%
2x6 24” o.c. walls		
• Assumed center of wall	19.0	
• Whole wall R-value	15.2	80%

Sheathing Costs

OSB/Tyvek	$649.48	R-0.06
1” EPS	$440.48	R-4
1” XPS	$692.18	R-5
1” polyisocyanurate	$797.05	R-7

Energy Loads

2x4 16” o.c. walls	
• Heat load	45.2 kBtuh
• Cooling load	45.6 kBtuh
2x6 24” o.c. walls	
• Heat load	28.0 kBtuh (-38%)
• Cooling load (downsized a/c)	26.0 kBtuh (-43%)

Energy Costs

2x4 16” o.c. walls		
• Heating	$332/year	$28/month
• Cooling	$671/year	$56/month
• **Total annual cost**	**$1,003**	
2x6 24” o.c. walls		
• Heat load	$231/year	$19/month
• Cooling load	$479/year	$40/month
• **Total annual cost**	**$710 (-$293/-30%)**	

A NOTE ON REAL WALL R-VALUES

More often than not, the thermal performance of built walls is incorrectly characterized by the center-of-cavity R-value of the wall’s thermal insulation. Builders and home buyers should be looking at the **whole-wall** R-value — that’s the thermal conductivity performance of the cavity insulation, **and** the framing, **and** the windows, **and** the doors. When both the home’s design and the framing layout are optimized for function and performance, the difference between the assumed center-of-cavity wall R-value and the whole wall R-value can be substantial (see the R-Value Truths in the Pulte case study).

- Whole wall R-value (average across wall)

Window	=	R-3
Door	=	R-2
2x4 stud	=	R-4.4
2x6 stud	=	R-6.8
Insulation	=	R-11 to R-19 (depending)

The Shores at Hidden Lake
Tracy, California
2 prototypes built/74 planned

© buildingscience.com

© 2002 Building Science Corporation

SUMMARY

From design to dumpster, residential construction abounds with opportunities to make more efficient use of our wood resources and products. And most of the opportunities are cost-competitive and then some, as well as delivering a higher performance home. Few systems in home building offer such clear win-win propositions as efficient wood use.

The handy checklist below summarizes the opportunities covered in this paper, each one supported by **Building America** experience with some of the nation's leading production builders. To save wood fiber, print up copies of just this list for your company and contractors!

1. Always make up detailed framing plans, to inform the design process and to inform your framing crew and their use of wood on the job site.
2. Use engineered wood and certified sustainably harvested wood products whenever possible.
3. Hone down your waste factor in your lumber take-off, and treat lumber deliveries as product—stick and cover the loads when they are delivered.
4. Use structural grade materials to their full approved capacity.
5. Don't use structural grade materials in non-structural applications if other materials can accomplish the required function(s).
6. Employ wood waste in on-site applications, such as SEE studs and erosion control material.

© buildingscience.com

© 2002 Building Science Corporation

U.S. Department of Energy
Building AMERICA
Program Partner

BUILDING SCIENCE CONSORTIUM BUILDING AMERICA PARTIAL LIST OF PROJECT LOCATIONS

Through the Building America program, Building Science Corporation was able to provide design assistance on wood efficiency to production builders from across the United States.

© 2002 Building Science Corporation

ACKNOWLEDGMENTS

This work was supported by the U.S. Department of Energy, Office of Building Technologies, State and Community Programs, Building America Program, George James, Program Manager. Editors include Nathan Yost, M.D., Joseph Lstiburek, Ph.D., P.Eng. and Betsy Pettit, AIA.

RESOURCES

EEBA Builder Guides, Joseph Lstiburek, 2000. Energy and Environmental Building Association. https://www.eeba.org/mall/builder_guides.asp

Efficient Wood Use in Residential Construction: A Practical Guide to Saving Wood, Money, and Forests, Ann Edminster and Sammi Yassa, 1998. Natural Resources Defense Council. http://www.nrdc.org/publications/default.asp

Residential Construction Waste Management: A Builder's Field Guide, Peter Yost and Eric Lund, 1997. NAHB Research Center.
http://www.toolbase.org/tertiaryT.asp?TrackID=&CategoryID=34&DocumentID=2629

Cost Effective Home Building: A Design and Construction Handbook, Tim Waite, 1996. NAHB Research Center. http://www.toolbase.org/tertiaryT.asp?TrackID=&DocumentID=2584&CategoryID=917

Houses That Work (web-based freely downloadable documents and drawings), Nathan Yost and Joseph Lstiburek, 2001. Building Science Corporation. http://www.buildingscience.com/housesthatwork/default.htm

© 2002 Building Science Corporation

About this Report

This report was prepared for the US Department of Energy's Building America Program. The report is freely available to the public at www.buildingamerica.gov.

Direct all correspondence to: Building Science Corporation, 70 Main Street, Westford, MA 01886

Limits of Liability and Disclaimer of Warranty:

Building Science documents are intended for professionals. The author and the publisher of this article have used their best efforts to provide accurate and authoritative information in regard to the subject matter covered. The author and publisher make no warranty of any kind, expressed or implied, with regard to the information contained in this article.

The information presented in this article must be used with care by professionals who understand the implications of what they are doing. If professional advice or other expert assistance is required, the services of a competent professional shall be sought. The author and publisher shall not be liable in the event of incidental or consequential damages in connection with, or arising from, the use of the information contained within this Building Science document.