Advanced Framing: Balancing Structure, Energy, and Cost

Presented on April 4, 2014 by
Karyn Beebe, PE, LEED AP

What is Advanced Framing?

Suite of Framing Techniques

- Advanced Framing is not a "take all or leave all" concept.
- Using any or some of the techniques is still "Advanced"
- The more holistic the approach, the more savings.

What is Advanced Framing?

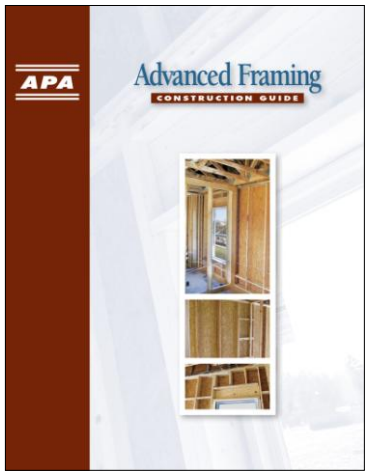

APA Construction Guide

- ✓Released February 2012
- ✓APA Form Number M400

What is Advanced Framing?

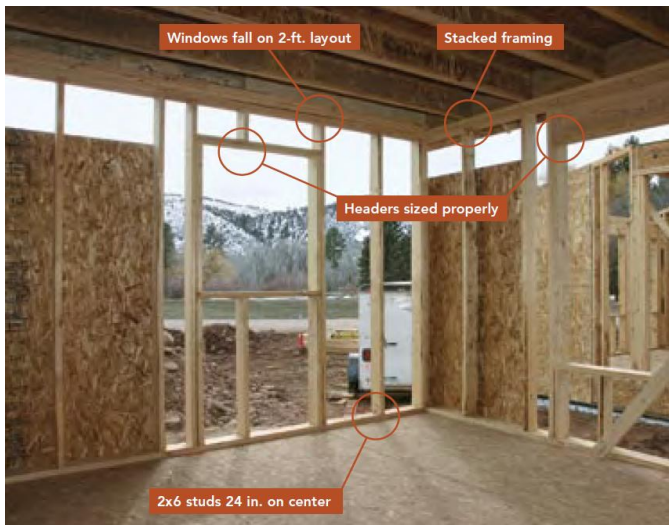

Why?
(Cost Effectiveness)

- More resource efficient than conventional framing
- Optimizing lumber usage reduces material costs
- Reduced framing labor
- Increase efficiency of other trades:
  - Fewer studs for plumbers and electricians to drill
  - Fewer cavities to fill
  - Less waste and dumpster costs

Why?
(Sustainability)

- Wood has long been a successful green building strategy
  - Renewable resource
  - Less energy to manufacture
  - Less pollutants to manufacture
  - Performs well on life-cycle analysis
- Advanced Framing delivers greater environmental dividends
  - Optimizing material usage
  - Reducing construction waste

APA

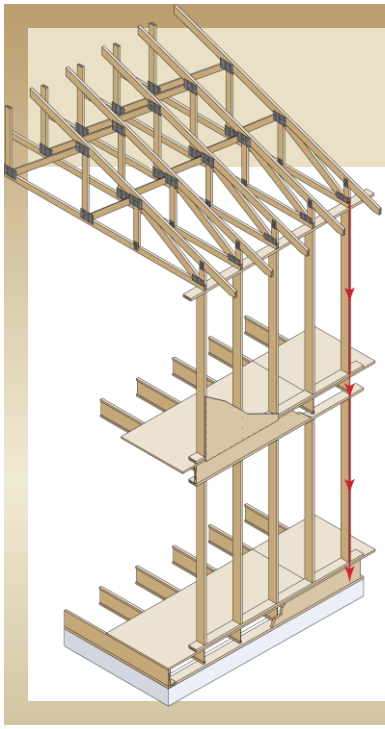

Why?
(Structural Integrity)

- Stacked Framing provides direct load path
- 2x6 studs @ 24" o.c. are 2-1/2 times stiffer than 2x4 studs @ 16" o.c.*
- Shear Wall & Wall Bracing Solutions
- Siding Attachment Solutions

* Moment of Inertia Comparison

How?
Phasing In Advanced Framing

1. Switch to 2x6 studs to increase cavity insulation depth and R20 energy code requirements.
2. Change wall framing module from 16" o.c. to 24" o.c. Retain the use of double top plates to avoid in-line framing.
3. Incorporate intersecting wall techniques and energy efficient corners, beginning with three-stud corners, that allow for greater insulation volume. Implement energy-efficient headers and single-member framing around openings.
4. Eliminate double top plates.

Conventional Framing

16”o.c. Member Spacing

CONVENTIONAL FRAMING: 2x4 Studs at 16" o.c., Double top plate, 3-Stud corners, 2-Stud ‘T’ junctions, Double 2x12 header on jack studs, Redundant cripples at ends of window sill plate

Advanced Framing

24”o.c. Member Spacing

ADVANCED FRAMING: 2x6 Studs at 24"o.c., Single top plate, 2-Stud corners, Ladder junctions, Wood structural panel headers, Single studs at sides of openings, Redundant cripples omitted

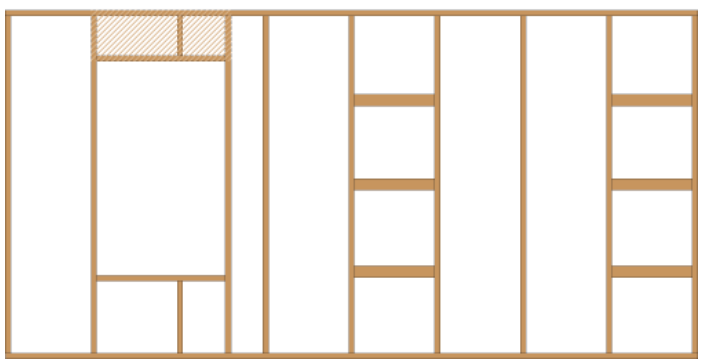

Two-stud Corners

Two-stud Corner (with Drywall Clips)

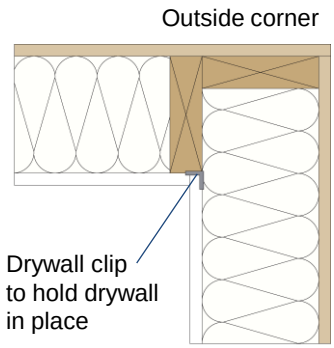

Alternatives 2012 IRC, Figure R602.3(2)

FRAMING DETAILS

Note: A third stud and/or partition backing stud shall be permitted to be omitted through the use of wood back-up cleats, metal drywall clips, or other approved devices that will serve as adequate backing for facing materials.

Two-stud Corners

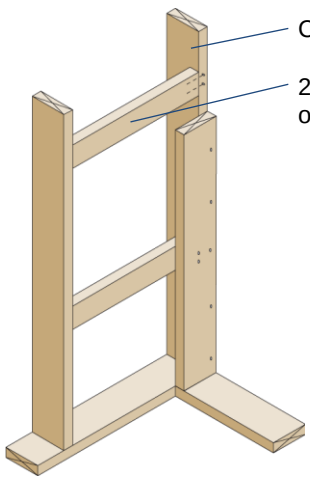

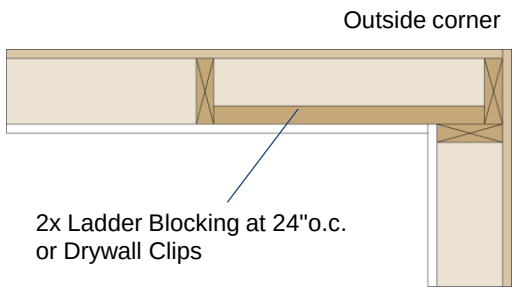

Interior Wall Intersection Options

Ladder Junction

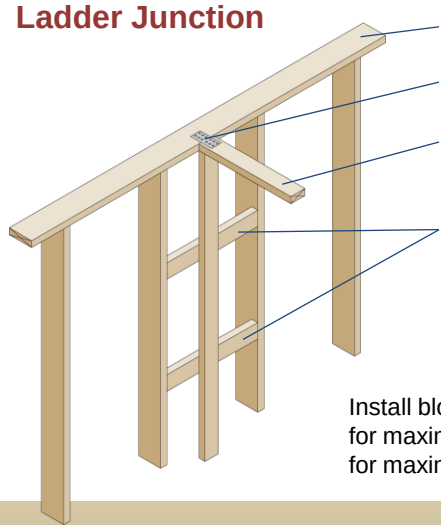

Single top plate

3" x 6" x 0.036" galvanized steel plate

Interior wall

2x ladder blocking at 24"o.c.

Install blocking with wide face vertical for maximum backing to wall finish and for maximum insulation in exterior walls.

Openings Non-Load-Bearing Walls

Conventional Headers Not Required

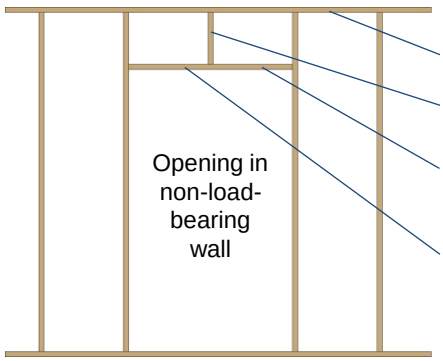

Single top plate

Cripple studs as required

Opening top plate may be doubled for openings wider than 8'

Single opening top plate

Note: Use jack studs as required.

Rough Opening Placement

The placement of openings in load-bearing walls and the layout of framing members above openings have significant impact on header sizing for advanced framing.

Minimum required materials to frame rough opening

Structure above imposing tributary loads on header

Potential increased header size - increased load from structure above

Excess materials due to inefficient opening placement

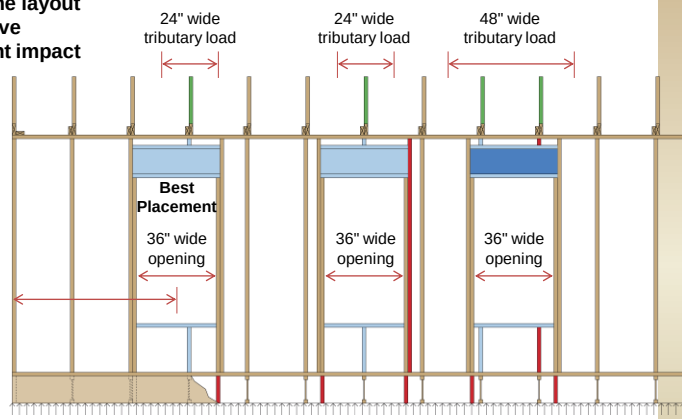

Note: Jack studs may not be required if using wood structural panel headers.

Engineered Wood & Lumber Headers

Single-Ply Header at Top Plate

Outside of wall

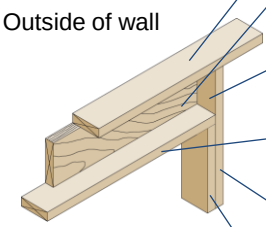

Top plate

Single-ply load-bearing header
(flush outer face of header with outer edge of studs)

Cavity insulation space
(to stud depth less single header thickness)

Header bottom plate
(to complete rough opening at header)

For many openings 4 feet wide or less in one-story buildings, single studs at sides of rough openings may be adequate. 2012 IRC Table R502.5(1).

Jack stud or approved framing connector
2012 IRC Tables R502.5(1) & R502.5(2)

2012 IRC Section R602.7.1

Engineered Wood & Lumber Headers

Large Opening Single Headers

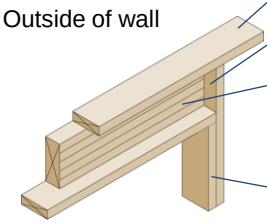

Outside of wall

Top plate

Cavity insulation space

3-1/8" or 3-1/2" glued laminated timbers (glulams), or multiple-ply structural composite lumber (SCL), or sawn lumber header

Jack studs as required

2012 IRC Section R602.7.1

Wood Structural Panel Box Header for Load-Bearing Walls

One-sided Wood Structural Panel Box Header

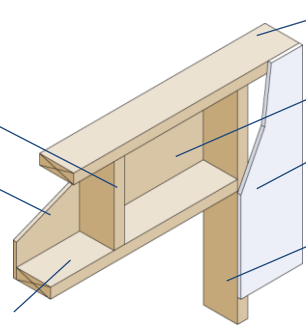

Cripple studs on stud layout

Min. 15/32 Performance Category wood structural panel

Header top plate to complete rough opening at header

Single top plate

Cavity insulation space (to full width of wall studs)

Drywall interior finished

Single stud at sides of rough openings to 48" wide, jack stud required span > 48"

Wood Structural Panel Box Header for Load-Bearing Walls

Two-Sided Wood Structural Panel Box Header

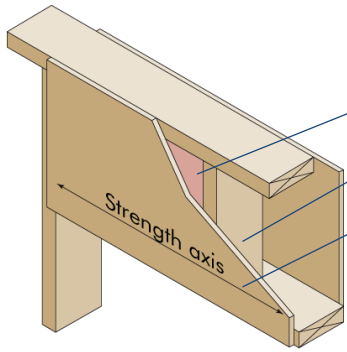

Insulation

Cripple studs on stud layout

Min. 15/32 Performance Category wood structural panel or thicker (sanded or MDO plywood may be used on inside surface in lieu of drywall)

The top plate of the wood structural panel box header shall be continuous over header. For construction details and maximum spans, see 2012 IRC Section R602.7.2, Figure R602.7.2 and Table R602.7.2.

Note: Framing fastening per code.

Energy Heel Truss to Wall

Wood Structural Panel Overlap

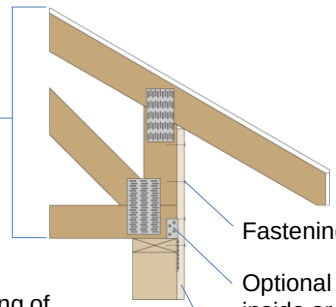

Energy heel truss

Fastening per design

Optional rafter-tie or tension strap inside or over wall sheathing per manufacturer recommendation

Plywood or OSB wall sheathing

Ensure correct fastening of sheathing to top plate per shear wall, wall bracing, or combined shear and uplift requirements.*

*See rafter-tie manufacturer's instructions for installation of strap over sheathing and into framing.

Ceiling Frame – Attic Insulation

Typical Attic Insulation with "Regular Heel"

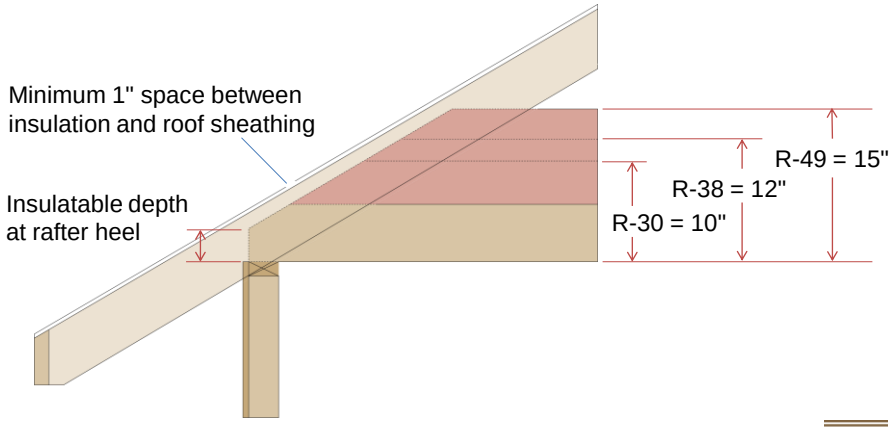

Ceiling Frame – Attic Insulation

Typical Attic Insulation with "Energy Heel"

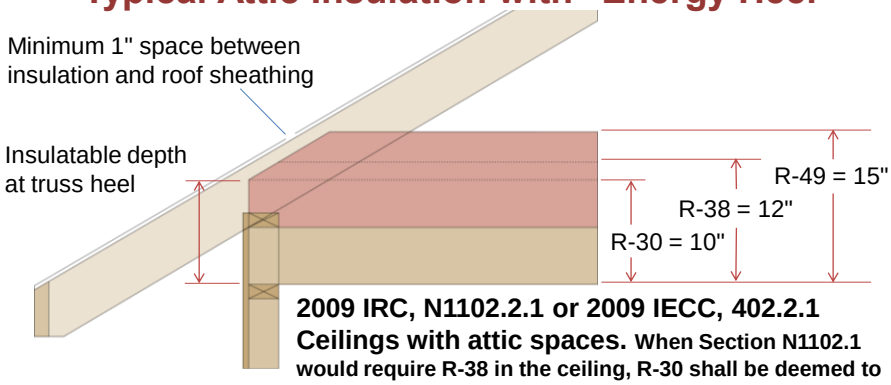

2009 IRC, N1102.2.1 or 2009 IECC, 402.2.1
Ceilings with attic spaces. When Section N1102.1 would require R-38 in the ceiling, R-30 shall be deemed to satisfy the requirement for R-38 whenever the full height of uncompressed R-30 insulation extends over the wall top plate at the eaves. Similarly, R-38 shall be deemed to satisfy the requirement for R-49…….

Challenges
Wall Sheathing Installation

Recommendations for 24" o.c. studs

- Fasten panels as recommended with 8d nails
  - 6" o.c. at all panel edges
  - 12" o.c. in the field
- Space panels 1/8" at all panel ends and edges
- Use minimum 7/16 category panels
- Some OSB panels alter strength-axis orientation to allow vertical placement with strength axis across studs

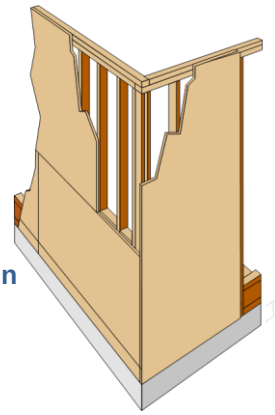

Challenges
Wall Sheathing Installation

Recommendations for shear walls with 24" o.c. studs

- Fasten panels as recommended with 8d nails
  - 6" o.c. at all panel edges
  - 6" o.c. in the field (3/8 or 7/16 CAT panels)
  - 12" o.c. in the field (Panels are > 7/16 CAT)
- Cannot take shear capacity increase for 3/8 or 7/16 CAT panels unless panels are horizontal
  - SDPWS Table 4.3A, Footnote 2 :

    Shears are permitted to be increased to values shown for 15/32 inch sheathing with the same nailing provided (a) studs are spaced a maximum of 16 inches on center or (b) panels are applied with long dimension across studs

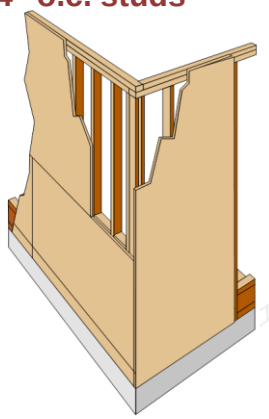

Recommended WSP for Stucco Exterior Finish

Stud Spacing	Panel Orientation	APA Rated Sheathing	
		Performance Category	Span Rating
16"	Horizontal	3/8	24/0
	Vertical	7/16 Structural 1 OSB	24/16
		15/32, 1/2 5-ply or OSB	32/16
24"	Horizontal	7/16	24/16
	Vertical	19/32, 5/8 5-ply or OSB	40/20

- **Blocking recommended between studs along horizontal panel joints**

Wood's Strength Direction

Strength Axis

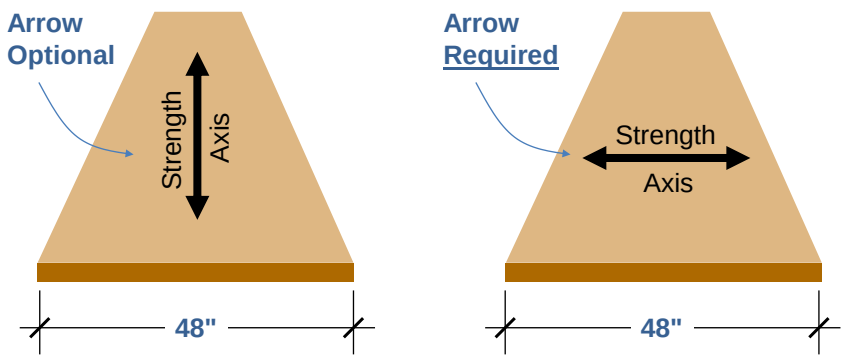

Common **Not Common**

Challenges
Wall Sheathing Installation

- **Cross Face Panels**
  - **"Strength Axis This Direction"**
  - **Strength in Short Direction for Vertical Installation**

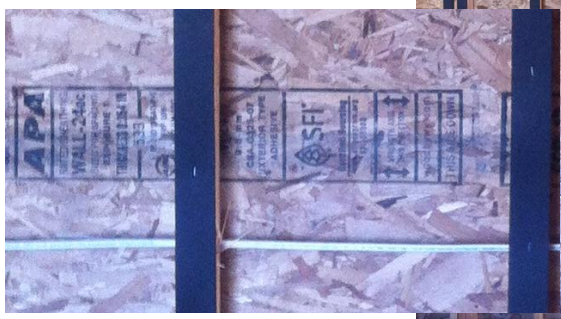

Examples

NET-ZERO Home

Sacramento Habitat for Humanity®

Customer Satisfaction

Burden is on the builder to produce structures that are:

1. **Cost-effective to build**
2. **Strong and safe**
3. **Energy-efficient and environmentally-friendly**

Balancing Cost, Structure and Energy

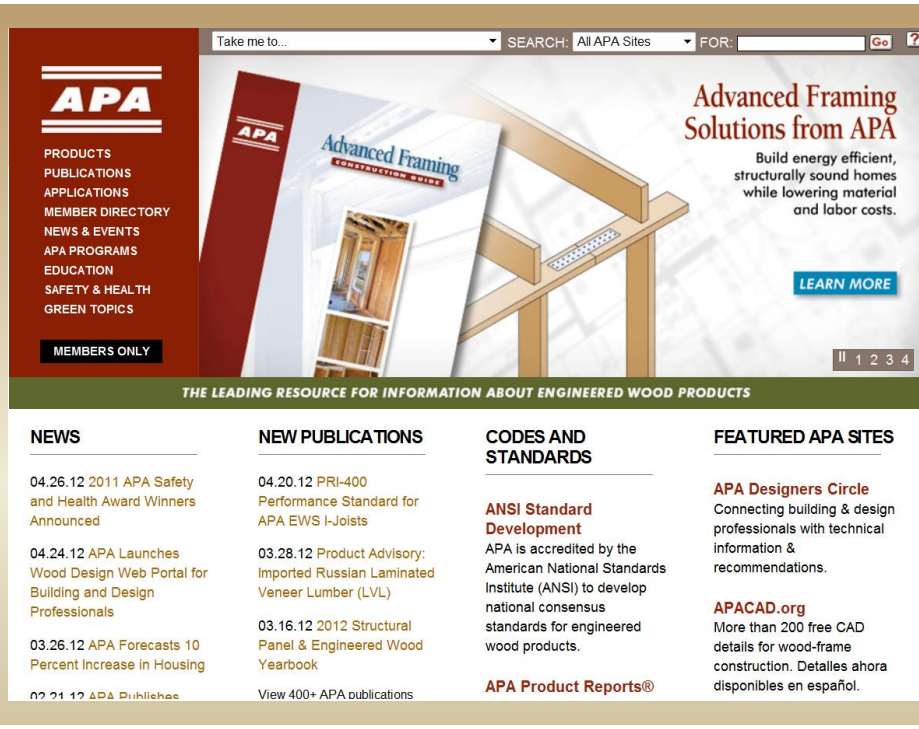

CAD Details

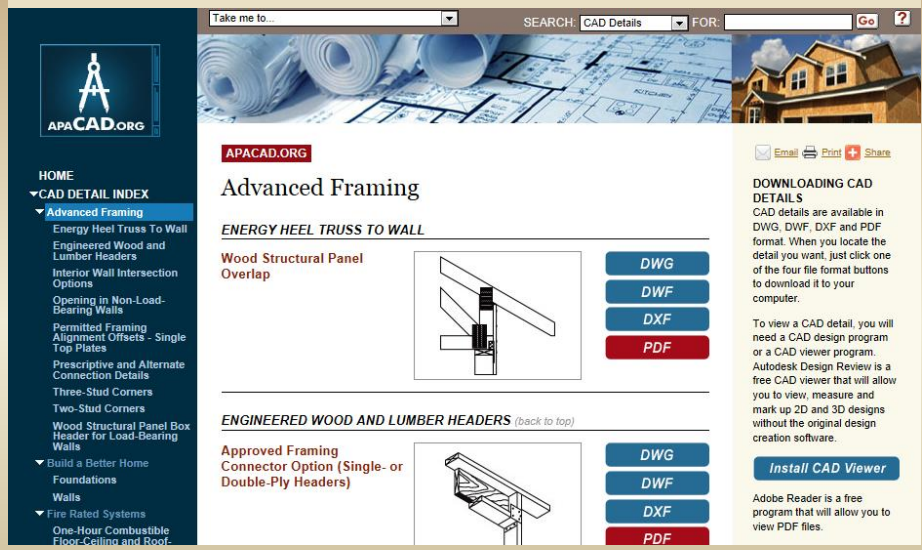
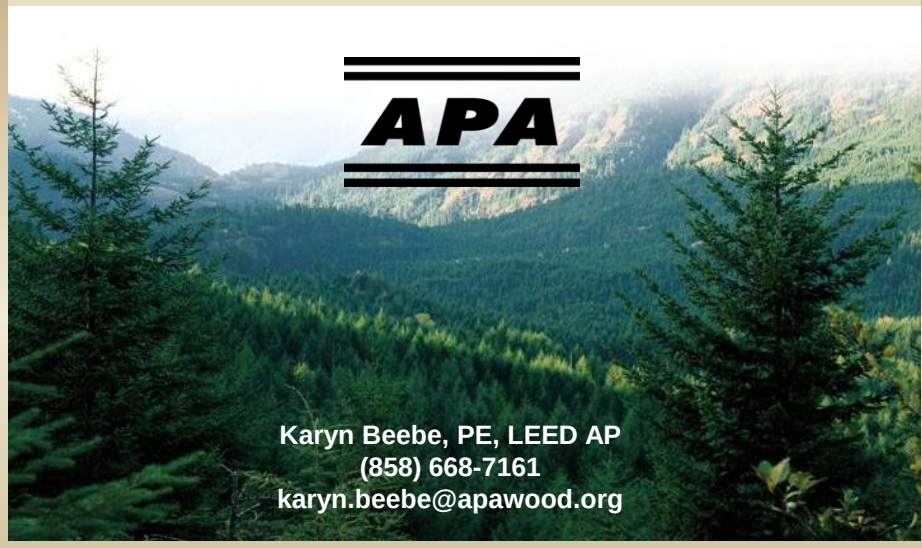
Questions?