PROPOSED REVISIONS TO THE CALIFORNIA BUILDING ENERGY EFFICIENCY STANDARDS

CALIFORNIA CODE OF REGULATIONS, TITLE 24, PART 6

JOINT APPENDICES TO PART 6

45-DAY LANGUAGE

Joint Appendix JA

Table of Contents

Appendix JA1 – Glossary **1**

Appendix JA2 – Reference Weather/Climate Data **1**

JA2.1 Weather Data - General 2

JA2.1.1 Counties and Cities with Climate Zone Designations 2

JA2.2 California Design Location Data 27

Appendix JA3 – Time Dependent Valuation (TDV) **1**

JA3.1 Scope and Purpose 1

JA3.2 Summary of Data 1

Appendix JA4 – U-factor, C-factor, and Thermal Mass Data **1**

JA4.1 Scope and Purpose 2

JA4.1.1 Introduction 2

JA4.1.2 California Energy Commission Approved Software 3

JA4.1.3 Tapered Insulation 7

JA4.1.4 Insulating Layers on Mass and Other Walls 7

JA4.1.5 Wood Based Sheathing R-values 7

JA4.1.6 Framing Percentages for Calculating U-factors 8

JA4.1.7 R-values and U-factors for Medium-Density Closed Cell and Low-Density Open Cell Spray Polyurethane Foam (SPF) Insulation: 9

JA4.2 Roofs and Ceilings 11

JA4.3 Walls 31

Table 4.3.2 – U-factors of Structurally Insulated Wall Panels (SIPS) 33

4.4 Floors and Slabs 59

JA4.5 Miscellaneous Construction 73

JA4.6 74

Appendix JA5 - Technical Specifications For Occupant Controlled Smart Thermostats **1**

JA5.1 Introduction 2

JA5.2 Required Functional Resources 3

JA5.2.1 Setback Capabilities 3

JA5.2.2 Communication Capabilities 3

JA5.2.3 OCST Messages and Attributes 3

JA5.2.4 Event Response 3

JA5.2.5 Other Required Capabilities 4

JA5.3 Functional Descriptions 5

JA5.3.1 Communications Interface 5
JA5.3.2 Expansion/Communication Port 5
JA5.3.3 Onboard Communications Devices 6
JA5.3.4 User Display and Interface 6
JA5.3.5 Required Functional Behavior 6
JA5.3.6 Restoring Factory Installed Default Settings 8
JA5.3.7 Security 8
JA5.4 The HVAC System Interface 8
JA5.5 Terminology 8
Appendix JA6 – HVAC System Fault Detection and Diagnostic Technology 1
JA6.1 Fault~~Charge~~ Indicator Display (~~CID~~FID) 2
JA6.1.1 Purpose and Scope 2
JA6.1.2 ~~CID~~ FID Product Approval 2
JA6.1.3 ~~CID~~ FID Installation 2
JA6.1.4 ~~CID~~ FID Product Documentation 2
JA6.1.5 Optional Fault Detection Capabilities 2
JA6.1.6 Requirements for a ~~Charge~~ Fault Indicator Display 3
JA6.2 Saturation Pressure Measurement Sensors 7
JA6.2.1 Purpose and Scope 7
JA6.2.2 SPMS Device Approval 7
JA6.2.3 Standard for Saturation Pressure Measurement Sensors 7
JA6.3 Economizer Fault Detection and Diagnostic Certification Submittal
JA6.3.1 Information that shall be included with the Declaration
JA6.3.2 Fault Detection Test Specifications
JA6.3.3Reporting of Test Results
JA6.3.4 Declaration
JA6.3.5 Certification
Appendix JA7 – Data Registry Requirements 1
JA7.1 Purpose and Scope 3
JA7.2 Definitions 4
JA7.3 Introduction 8
JA7.4 Roles and Responsibilities, and Authorized Users 9
JA7.4.1 Registration Provider 9
JA7.4.2 Authorized Users 9
JA7.4.3 View-Only Authorized User 9
JA7.4.4 Documentation Author 10
JA7.4.5 Field Technician 10

JA7.4.6 Registration Signer (Responsible Person) ... 10
JA7.4.7 Enforcement Agency ... 10
JA7.5 Document Registration Requirements ... 12
JA7.5.1 Overview ... 12
JA7.5.2 Document Appending ... 12
JA7.5.3 Data Validation for Compliance Document Registration ... 13
JA7.5.4 Registration Numbering Conventions ... 14
JA7.5.5 Verification of Authenticity of Copies of Registered Documents ... 16
JA7.5.6 Project Document Configuration ... 16
JA7.5.7 Certificate of Compliance Requirements ... 18
JA7.5.8 Certificate of Installation Requirements ... 18
JA7.5.9 Certificate of Verification Requirements ... 19
JA7.5.10 Certificate of Acceptance Requirements ... 20
JA7.6 Electronic and Digital Signature Requirements ... 21
JA7.6.1 Introduction ... 21
JA7.6.2 Overall Description ... 21
JA7.6.3 Specific requirements ... 23
JA7.7 Data Exchange Requirements ... 28
JA7.7.1 Data Exchange Requirements for Document Registration ... 28
JA7.8 Data Registry Approval ... 30
JA7.8.1 Overview ... 30
JA7.8.2 Application Checklist ... 30
JA7.8.3 Types of Approval ... 31
JA7.8.4 Rescinding Approval (Deactivation) of Data Registries ... 32
JA7.8.5 Data Registry User Manual ... 33
JA7.9 Approval of Software Used for Data Input to Data Registries ... 34
JA7.9.1 Overview ... 35
JA7.9.2 Application Checklist ... 35
JA7.9.3 Types of Approval ... 35
JA7.9.4 Rescinding Approval (Deactivation) of Software ... 36
JA7.9.5 Software User Manual ... 38
JA7.10 Related Publications ... 38
Appendix JA8 – Qualification Requirements for Residential Luminaires Using LED Light Source .. 1
Appendix JA9 – Qualification Requirements for Low Leakage Air-Handling Units ... 1
JA9.1 Purpose and Scope ... 1
JA9.2 Qualification Requirements ... 1
JA9.2.1 Method of Test ... 1
JA9.2.2 Testing Laboratory Requirements ... 1

JA9.2.3 Nominal Air-Handling Unit Airflow 2
JA9.2.4 Leakage Criterion for Qualification 2

(This page left intentionally blank.)

Joint Appendix JA1

Appendix JA1 – Glossary

ACCA is the Air Conditioning Contractors of America

ACCA MANUAL J is the Air Conditioning Contractors of America document titled "Manual J - Residential Load Calculation" (ANSI/ACCA 2 Manual J – 2006).

ACCEPTANCE REQUIREMENTS FOR CODE COMPLIANCE is a description of test procedures in the Reference Nonresidential Appendices that includes equipment and systems to be tested, functions to be tested, conditions under which the test shall be performed, the scope of the tests, results to be obtained, and measurable criteria for acceptable performance.

ACCESSIBLE is having access thereto, but which first may require removal or opening of access panels, doors, or similar obstructions.

ACM See Alternative Calculation Method.

ACP See Alternative Component Package.

ADDITION is any change to a building that increases conditioned floor area and conditioned volume. Addition is also any change that increases the floor area and volume of an unconditioned building of an occupancy group or type regulated by Part 6. Addition is also any change that increases the illuminated area of an outdoor lighting application regulated by Part 6.

AFUE See Annual Fuel Utilization Efficiency.

AGRICULTURAL BUILDING is a structure designed and constructed to house farm implements, hay, grain, poultry, livestock or other horticultural products. It is not a structure that is a place of human habitation, a place of employment where agricultural products are processed, treated or packaged, or a place used by the public.

AIR BARRIER is combination of interconnected materials and assemblies joined and sealed together to provide a continuous barrier to air leakage through the building envelope that separates conditioned from unconditioned space, or adjoining conditioned spaces of different occupancies or uses.

AIR CONDITIONER is an appliance that supplies cooled and dehumidified air to a space for the purpose of cooling objects within the space.

AIR-COOLED AIR CONDITIONER is an air conditioner using an air-cooled condenser.

AIR-HANDLING UNIT or AIR HANDLER is a blower or fan that distributes supply air to a room, space, or area.

AIR FILTER EQUIPMENT or AIR FILTER DEVICE is air-cleaning equipment used for removing particulate matter from the air.

AIR FILTER MEDIA is the part of the air filter equipment, that is the actual particulate removing agent.

AIR LEAKAGE Is a measure of how much outside air comes into a home or building through a manufactured fenestration or exterior door products.

AIR POROSITY is a measure of the air-tightness of infiltration barriers in units of cubic feet per hour per square foot per inch of mercury pressure difference.

AIRFLOW ACROSS THE EVAPORATOR is the rate of airflow, usually measured in cfm across a heating or cooling coil. The efficiency of air conditioners and heat pumps is affected by the airflow across the evaporator (or condenser in the case of a heat pump).

AIR-TO-AIR HEAT EXCHANGER is a device which will reduce the heat losses or gains that occur when a building is mechanically ventilated, by transferring heat between the conditioned air being exhausted and outside air being supplied.

AIR-SOURCE HEAT PUMP is an appliance that consists of one or more factory-made assemblies that includes an indoor conditioning coil, a compressor and a refrigerant-to-air heat exchanger, and that provides heating and cooling functions.

ALTERATION is any change to a building's water-heating system, space-conditioning system, lighting system, or envelope that is not an addition. Alteration is also any change that is regulated by Part 6 to an outdoor lighting system that is not an addition. Alteration is also any change that is regulated by Part 6 to signs located either indoors or outdoors.

ALTERED COMPONENT is a component that has undergone an alteration and is subject to all applicable Standards requirements.

ALTERNATIVE CALCULATION METHOD (ACM) APPROVAL MANUAL or ACM APPROVAL MANUAL are the document that establishes the requirements for Energy Commission approval of performance software used to demonstrate compliance with the Building Energy Efficiency Standards for Residential and Nonresidential Buildings, Published by the California Energy Commission.

ALTERNATIVE CALCULATION METHOD (ACM) REFERENCE MANUAL or ACM REFERENCE MANUAL contains the specific procedures to implement Sections 140.1 and 150.1 of Title 24, Part 6 of the California Code of Regulations in Compliance Software.

ALTERNATIVE CALCULATION METHODS (ACM) are the Commission's Public Domain Computer Programs, one of the Commission's Simplified Calculation Methods, or any other calculation method approved by the Commission. ACMs are also referred to as compliance software.

ALTERED COMPONENT is a component that has undergone an alteration and is subject to all applicable Standards requirements.

ALTERNATIVE COMPONENT PACKAGE is a set of building measures whose aggregate calculated energy use is less than or equal to the maximum allowed Energy Budget.

ANNUAL FUEL UTILIZATION EFFICIENCY (AFUE) is a measure of the percentage of heat from the combustion of gas or oil which is transferred to the space being heated during a year, as determined using the applicable test method in the Appliance Efficiency Regulations or §110.2.

ANNUNCIATED is a type of visual signaling device that indicates the on, off, or other status of a load.

ANSI is the American National Standards Institute.

ANSI C82.2 is the American National Standard for Lamp Ballasts –Method of Measurement for Fluorescent Lamp Ballasts (ANSI C82.2:2002).

ANSI C82.6-2005 is the American National Standards Institute document titled “Ballasts for High-Intensity Discharge Lamps – Methods of Measurement” (ANSI C82.6-2005).

ANSI C82.77 is the American National Standard for Harmonic Emission Limits - Related Power Quality Requirements for Lighting Equipment (ANSI C82.77-2002).

ANSI/IES RP-16-10 is the document coauthored by the American National Standards Institute and the Illuminating Engineering Society of North America, Recommended Practice titled "Nomenclature and Definitions for Illuminating Engineering."

ANSI Z21.10.3 is the American National Standards Institute document titled “Gas Water Heaters - Volume III, Storage Water Heaters With Input Ratings Above 75,000 Btu Per Hour,” 2011 (ANSI Z21.10.3-2011/CSA 4.3-2011).

ANSI Z21.13 is the American National Standards Institute document titled “Gas-Fired Low Pressure Steam and Hot Water Boilers,” 2010 (ANSI Z21.13-2010/CSA 4.9-2010).

ANSI Z21.40.4A is the American National Standards Institute document titled “Addenda 1 to ANSI Z21.40.4-1996/CGA 2.94-M96, Performance Testing and Rating of Gas-Fired, Air Conditioning and Heat Pump Appliances,” 1998 (ANSI Z21.40.4-1998/CGA 2.94A-M98).

ANSI Z21.47 is the American National Standards Institute document titled “Gas-Fired Central Furnaces,” 2006 (ANSI Z21.47-2006/CSA 2.3-2006).

ANSI Z83.8 is the American National Standards Institute document titled “American National Standard/CSA Standard For Gas Unit Heaters, Gas Packaged Heaters, Gas Utility Heaters and Gas-Fired Duct Furnaces,” 2009 (ANSI Z83.8 -2009/CSA 2.6-2009).

APPLIANCE EFFICIENCY REGULATIONS are the regulations in Title 20, Section 1601 et seq. of the California Code of Regulations.

APPLIANCE STANDARDS are the Standards contained in the Appliance Efficiency Regulations.

APPROVED as to a home energy rating provider or home energy rating system, is reviewed and approved by the Commission under Title 20, Section 1675 of the California Code of Regulations.

APPROVED BY THE COMMISSION means approval under Section 25402.1 of the Public Resources Code.

APPROVED CALCULATION METHOD is compliance software, or alternative component packages, or exceptional methods approved under Section 10-109.

AREAL HEAT CAPACITY See Heat Capacity.

AHRI is the Air-Conditioning, Heating and Refrigeration Institute.

AHRI 210/240 is the Air-conditioning, Heating, and Refrigeration Institute document titled “Performance Rating of Unitary Air-Conditioning and Air-Source Heat Pump Equipment,” 2008 (ANSI/AHRI Standard 210/240-2008 with Addenda 1 and 2).

ANSI/AHRI/CSA 310/380 is the Air-Conditioning, Heating, and Refrigeration Institute document titled “Standard for Packaged Terminal Air-Conditioners and Heat Pumps (CSA-C744-04),” 2004 (ANSI/AHRI/CSA Standard 310/380-2004).

AHRI 320 is the Air-Conditioning, Heating and Refrigeration Institute document titled “Water-Source Heat Pumps,” 1998 (AHRI Standard 320-1998).

AHRI 325 is the Air-Conditioning, Heating and Refrigeration Institute document titled “Ground Water-Source Heat Pumps,” 1998 (ARI Standard 325-1998).

ANSI/AHRI 340/360 is the Air-Conditioning, Heating and Refrigeration Institute document titled “Performance Rating of Commercial and Industrial Unitary Air-Conditioning and Heat Pump Equipment,” 2007 (ANSI/AHRI Standard 340/360-2007 with Addenda 1 and 2).

ANSI/AHRI 365 is the Air-Conditioning, Heating and Refrigeration Institute document titled "Commercial and Industrial Unitary Air-Conditioning Condensing Units," 2009 (ANSI/AHRI Standard 365 (I-P)-2009).

ANSI/AHRI 390 is the Air-Conditioning, Heating and Refrigeration Institute document titled "Performance Rating of Single Package Vertical Air-Conditioners and Heat Pumps," 2003 (ANSI/AHRI Standard 390 (I-P)-2003).

ANSI/AHRI 400 is the Air-Conditioning, Heating and Refrigeration Institute document titled "Liquid to Liquid Heat Exchangers," 2001 (ANSI/AHRI Standard 400 (I-P)-2001) with addenda 1 and 2.

ANSI/AHRI 460 is the Air-Conditioning, Heating and Refrigeration Institute document titled “Performance Rating of Remote Mechanical-Draft Air-Cooled Refrigerant Condensers,” 2005 (ANSI/AHRI Standard 460-2005).

AHRI 550/590 is the Air-Conditioning, Heating and Refrigeration Institute document titled “Performance Rating of Water Chilling Packages Using the Vapor Compression Cycle,” 2011 (AHRI Standard 550/590-(I-P)-2011).

ANSI/AHRI 560 is the Air-Conditioning, Heating and Refrigeration Institute document titled “Absorption Water Chilling and Water Heating Packages,” 2000 (ANSI/AHRI Standard 560-2000).

AHRI 680 is the Air-Conditioning, Heating and Refrigeration Institute document titled “Performance Rating of Residential Air Filter Equipment,” 2009 (ANSI/AHRI Standard 680).

AHRI 1230 is the Air-Conditioning, Heating and Refrigeration Institute document titled "Performance Rating of Variable Refrigerant Flow (VRF) Multi-Split Air-Conditioning and Heat Pump Equipment," 2010 (AHRI Standard 1230-2010) with Addendum 1.

ASHRAE is the American Society of Heating, Refrigerating, and Air-conditioning Engineers.

ASHRAE CLIMATIC DATA FOR REGION X is the American Society of Heating, Refrigerating and Air-Conditioning Engineers document titled "ASHRAE Climatic Data for Region X, Arizona, California, Hawaii and Nevada," Publication SPCDX, 1982 and "Supplement," 1994.

ASHRAE HANDBOOK, APPLICATIONS VOLUME is the American Society of Heating, Refrigerating and Air-Conditioning Engineers document titled "ASHRAE Handbook: Heating, Ventilating, and Air-Conditioning Applications" (2011).

ASHRAE HANDBOOK, EQUIPMENT VOLUME is the American Society of Heating, Refrigerating and Air-Conditioning Engineers document titled "ASHRAE Handbook: Heating, Ventilating, and Air-Conditioning Systems and Equipment" (2008).

ASHRAE HANDBOOK, FUNDAMENTALS VOLUME is the American Society of Heating, Refrigerating and Air-Conditioning Engineers document titled "ASHRAE Handbook: Fundamentals" (2009).

ASHRAE STANDARD 52.2 is the American Society of Heating, Refrigerating and Air-Conditioning Engineers document titled "Method of Testing General Ventilation Air-Cleaning Devices for Removal Efficiency by Particle Size," 2007 (ANSI/ASHRAE Standard 52.2-2007 including ANSI/ASHRAE Addendum b to ANSI/ASHRAE Standard 52.2-2007).

ASHRAE STANDARD 55 is the American Society of Heating, Refrigerating and Air-Conditioning Engineers document titled " Thermal Environmental Conditions for Human Occupancy," 2010 (ASHRAE Standard 55-2010).

ASHRAE STANDARD 62.2 is the American Society of Heating, Refrigerating and Air-Conditioning Engineers document titled "Ventilation and Acceptable Indoor Air Quality in Low-Rise Residential Buildings," 2010 (ANSI/ASHRAE Standard 62.2-2010 including ANSI/ASHRAE Addenda b, c, e, g, h, i and l to ANSI/ASHRAE 62.2-2010 published in the 2011 supplement, and ANSI/ASHRAE Addendum j to ANSI/ASHRAE Standard 62.2-2010 published in March, 2012, and ANSI/ASHRAE Addendum n to ANSI/ASHRAE Standard 62.2-2010 published in February, 2012).

ASHRAE STANDARD 193 is the American Society of Heating, Refrigerating and Air-Conditioning Engineers document titled "Method of Test for Determining the Airtightness of HVAC Equipment," 2010 (ANSI/ASHRAE Standard 193-2010).

ASME is the American Society of Mechanical Engineers.

ASME A112.18.1/CSA B125.1 is the American Society of Mechanical Engineers document titled "Plumbing Fixture Fittings" 2011 (ASME Standard A112.18.1-2011/CSA B125.1-11).

ASTM is the American Society for Testing and Materials / International.

ASTM C1167 is the American Society for Testing and Materials document titled "Standard Specification for Clay Roof Tiles," 2011 (ASTM C1167-11).

ASTM C1371 is the American Society for Testing and Materials document titled "Standard Test Method for Determination of Emittance of Materials Near Room Temperature Using Portable Emissometers," 1998 (ASTM C1371-98).

ASTM C1492 is the American Society for Testing and Materials document entitled "Standard Specification for Concrete Roof Tile," 2009 (ASTM C1492-03(2009)).

ASTM C1583 is the American Society of Testing and Materials document titled, "Standard Test Method for Tensile Strength of Concrete Surfaces and the Bond Strength or Tensile Strength of Concrete Repair and Overlay Materials by Direct Tension (Pull-off Method)," 2004 (ASTM C1583-04).

ASTM C177 is the American Society for Testing and Materials document titled "Standard Test Method for Steady-State Heat Flux Measurements and Thermal Transmission Properties by Means of the Guarded-Hot-Plate Apparatus," 1997 (ASTM C177-97).

ASTM C272 is the American Society for Testing and Materials document titled “Standard Test Method for Water Absorption of Core Materials for Structural Sandwich Constructions,” 2001 (ASTM C272-01).

ASTM C335 is the American Society for Testing and Materials document titled “Standard Test Method for Steady-State Heat Transfer Properties of Horizontal Pipe Insulation,” 1995 (ASTM C335-95).

ASTM C518 is the American Society for Testing and Materials document titled “Standard Test Method for Steady-State Thermal Transmission Properties by Means of the Heat Flow Meter Apparatus,” 2002 (ASTM C518-02).

ASTM C55 is the American Society for Testing and Materials document titled “Standard Specification for Concrete Brick,” 2001 (ASTM C55-01).

ASTM C731 is the American Society for Testing and Materials document titled “Standard Test Method for Extrudability, After Package Aging of Latex Sealants,” 2000 (ASTM C731-00).

ASTM C732 is the American Society for Testing and Materials document titled “Standard Test Method for Aging Effects of Artificial Weathering on Latex Sealants,” 2001 (ASTM C732-01).

ASTM C836 is the American Society of Testing and Materials document titled, “Standard Specification for High Solids Content, Cold Liquid-Applied Elastomeric Waterproofing Membrane for Use with Separate Wearing Course,” 2005 (ASTM C836-05).

ASTM C1549 is the American Society for Testing and Materials document entitled, "Standard Test Method for Determination of Solar Reflectance Near Ambient Temperature Using a Portable Solar Reflectometer,"2004 (ASTM C1549-04).

ASTM D1003 is the American Society for Testing and Materials document titled “Standard Test Method for Haze and Luminous Transmittance of Transparent Plastics,” 2000 (ANSI/ASTM D1003-00).

ASTM D1653 is the American Society of Testing and Materials document titled, “Standard Test Methods for Water Vapor Transmission of Organic Coating Films,” 2003 (ASTM D1653-03).

ASTM D2370 is the American Society of Testing and Materials document titled, “Standard Test Method for Tensile Properties of Organic Coatings,” 2002 [ASTM D2370-98 (2002)].

ASTM D2824 is the American Society of Testing and Materials document titled “Standard Specification for Aluminum-Pigmented Asphalt Roof Coatings, Nonfibered, Asbestos Fibered, and Fibered without Asbestos,” 2002 (ASTM D2824-02).

ASTM D3468 is the American Society of Testing and Materials document titled, “Standard Specification for Liquid-Applied Neoprene and Chlorosulfonated Polyethylene Used in Roofing and Waterproofing,” 1999 (ASTM D3468-99).

ASTM D3805 is the American Society of Testing and Materials document titled “Standard Guide for Application of Aluminum-Pigmented Asphalt Roof Coatings,” 1997 (ASTM D3805-97 (reapproved 2003)).

ASTM D4798 is the American Society for Testing and Materials document titled “Standard Test Method for Accelerated Weathering Test Conditions and Procedures for Bituminous Materials (Xenon-Arc Method),” 2001 (ASTM D4798-01).

ASTM D522 is the American Society of Testing and Materials document titled, “Standard Test Methods for Mandrel Bend Test of Attached Organic Coatings,” 2001 [ASTM D522-93a (2001)].

ASTM D5870 is the American Society of Testing and Materials document titled, “Standard Practice for Calculating Property Retention Index of Plastics,” 2003 [ASTM D5870-95 (2003)].

ASTM D6083 is the American Society of Testing and Materials document titled, “Standard Specification for Liquid Applied Acrylic Coating Used in Roofing,” 2005 (ASTM D6083-05e1).

ASTM D6694 is the American Society of Testing and Materials document titled, “Standard Specification for Liquid-Applied Silicone Coating Used in Spray Polyurethane Foam Roofing,” 2001 (ASTM D6694-01).

ASTM D6848 is the American Society of Testing and Materials document titled “Standard Specification for Aluminum-Pigmented Emulsified Asphalt Used as a Protective Coating for Roofing,” 2002 (ASTM D6848-02).

ASTM D822 is the American Society of Testing and Materials document titled, “Standard Practice for Filtered Open-Flame Carbon-Arc Exposures of Paint and Related Coatings,” 2001 (ASTM D822-01).

ASTM E96 is the American Society for Testing and Materials document titled “Standard Test Methods for Water Vapor Transmission of Materials,” 200 (ASTM E96-00).

ASTM E283 is the American Society for Testing and Materials document titled “Standard Test Method for Determining the Rate of Air Leakage Through Exterior Windows, Curtain Walls, and Doors Under Specified Pressure Differences Across the Specimen,” 1991 (ASTM E283-91(1999)).

ASTM E408 is the American Society for Testing and Materials document titled, “Standard Test Methods for Total Normal Emittance of Surfaces Using Inspection-Meter Techniques,” 1971 (ASTM E408-71(2002)).

ASTM E972 is the American Society for Testing and Materials document titled, "Standard Test Method for Solar Photometric Transmittance of Sheet Materials Using Sunlight,"1996 (ASTM E972-96(2007)).

ASTM E1918 is the American Society for Testing and Materials document entitled, "Standard Test Method for Measuring Solar reflectance of Horizontal and Low-Sloped Surfaces in the Field,"2006 (ASTM E972-06).

ASTM E2178-03 is the American Society for Testing and Materials document titled, "Standards Test Method for Air Permeance of Building Materials.

ASTM E2357-11 is the American Society for Testing and Materials document titled, "Standard Test Method for determining air leakage of air barrier assemblies.

ATTIC is an enclosed space directly below the roof deck and above the ceiling beams.

AUTO REPAIR See Nonresidential Functional Area or Type of Use.

AUTOMATED TELLER MACHINE (ATM) is any electronic information processing device which accepts or dispenses currency in connection with a credit, deposit, or convenience account without involvement by a clerk.

AUTOMATIC is capable of operating without human intervention.

BACK is the back side of the building as one faces the front façade from the outside (see Front). This designation is used on the Certificate of Compliance (CF-1R form) to indicate the orientation of fenestration (e.g., Back-West).

BELOW-GRADE WALL is the portion of a wall, enclosing conditioned space that is below the grade line.

BRITISH THERMAL UNIT (BTU) is the amount of heat needed to raise the temperature of one pound of water one degree Fahrenheit.

BTU/H is the amount of heat in Btu that is removed or added during one hour. Used for measuring heating and cooling equipment output.

BUBBLE POINT is the liquid saturation temperature of a refrigerant at a specified pressure.

BUILDER is the general contractor responsible for construction.

BUILDING is any structure or space covered by Section 100.0 of the Building Energy Efficiency Standards.

BUILDING COMMISSIONING is a systematic quality assurance process that spans the entire design and construction process, including verifying and documenting that building systems and components are planned, designed, installed, tested, operated and maintained to meet the owner’s project requirements.

BUILDING ENERGY EFFICIENCY STANDARDS are the California Building Energy Efficiency Standards as set forth in the California Code of Regulations, Title 24, Part 6. Also known as the California Energy Code.

BUILDING ENVELOPE is the ensemble of exterior and demising partitions of a building that enclose conditioned space.

BUILDING LOCATION DATA is the specific outdoor design temperatures shown in Reference Joint Appendix JA2 used in calculating heating and cooling loads for the particular location of the building.

BUILDING OWNER is the owner of the building or dwelling unit.

BUILDING PERMIT is an electrical, plumbing, mechanical, building, or other permit or approval, that is issued by an enforcement agency, and that authorizes any construction that is subject to Part 6.

BUILDING TYPES is the classification of buildings defined by the CBC and applicable to the requirements of the Building Energy Efficiency Standards.

CALIFORNIA ELECTRICAL CODE is the 2007 California Electrical Code.

CALIFORNIA ENERGY CODE See Building Energy Efficiency Standards.

CALIFORNIA ENERGY COMMISSION Is the California State Energy Resources Conservation and Development Commission.

CALL CENTER is a phone center that handles large number of phone calls including but not limited to help desk, customer and sales support, technical support, emergency response, telephone answering service, and inbound and outbound telemarketing.

CBC is the 2007 California Building Code.

CEILING is the interior upper surface of a space separating it from an attic, plenum, indirectly or directly conditioned space or the roof assembly, which has a slope less than 60 degrees from horizontal.

CENTRAL FAN-INTEGRATED VENTILATION SYSTEM is a central forced air heating and/or cooling system which is intended to operate on a regular basis to bring in outdoor ventilation air and/or distribute air around the home for comfort and ventilation even when heating and cooling are not needed.

CERTIFICATE OF COMPLIANCE is a document with information required by the Commission that is prepared by the Documentation Author that indicates whether the building includes measures that require field verification and diagnostic testing.

CERTIFICATE OF INSTALLATION is a document with information required by the Commission that is prepared by the builder or installer verifying that the measure was installed to meet the requirements of the Standards.

CERTIFICATE OF VERIFICATION is a document with information required by the Commission that is prepared by the HERS Rater to certify that measures requiring field verification and diagnostic testing comply with the requirements.

CERTIFICATION is certification by the manufacturer to the Commission, as specified the Appliance Efficiency Regulations, that the appliance complies with the applicable standard for that appliance. The term certification is also used in other ways in the standards. Many of the compliance forms are certificates, whereby installers, HERS testers and others certify that equipment was correctly installed and/or tested.

CERTIFIED as to a home energy rater, is having been found by a certified home energy rating provider to have successfully completed the requirements established by that home energy rating provider.

CERTIFIED TO THE ENERGY COMMISSION means certified by the manufacturer in a declaration, executed under penalty of perjury of the laws of California, that all the information provided in the statement is true, complete, accurate and in compliance with all applicable provisions of Part 6; and the equipment, product, or device was tested under the applicable test method specified in Part 6.

CERTIFYING ORGANIZATION is an independent organization recognized by the Commission to certify manufactured devices for performance values in accordance with procedures adopted by the Commission.

CIE 13.3 is the International Commission on Illumination (Commission Internationale de l'Eclairage) document titled "Method of Measuring and Specifying Colour Rendering Properties of Light Sources," 1995 (CIE 13.3-1995)

CIE 15 is the International Commission on Illumination (Commission Internationale de l'Eclairage) document titled "Technical Report: Colorimetry," 2004 (CIE 15:2004)

CIE 53 is the International Commission on Illumination (Commission Internationale de l'Eclairage) document titled "Methods of Characterizing the Performance of Radiometers and Photometers," (CIE 053-1982).

COLOR RENDERING INDEX (CRI). The ability of a light source to reflect the color of illuminated objects with fidelity relative to ideal or natural light sources of the same color temperature. CRI is calculated according to CIE 13.3

CORRELATED COLOR TEMPERATURE (CCT). Description of color of light relative to the chromaticity of the radiative emission of heated black body and reported in temperature units of Kelvin according to CIE 15

CODES, CFR is the 2014 Code of Federal Regulations.

CLIMATE ZONES are the 16 geographic areas of California for which the Commission has established typical weather data, prescriptive packages and energy budgets. Climate zones are defined by ZIP code and listed in Reference in Joint Appendix JA2 FIGURE 100.1-A is an approximate map of the 16 climate zones.

CLOSED-CIRCUIT COOLING TOWER is a cooling tower that utilizes indirect contact between a heated fluid, typically water or glycol, and the cooling atmosphere to transfer the source heat load indirectly to the air, essentially combining a heat exchanger and cooling tower into relatively compact device.

CLTD is the Cooling Load Temperature Difference.

CMC is the 2010 California Mechanical Code.

CODES, CALIFORNIA HISTORICAL BUILDING CODE is the California Historical Building Code, California Code of Regulations, Title 24, Part 8 and Part 2 (Chapter 34).

CODES, CBC is the 2010 California Building Code.

CODES, CEC is the 2010 California Electrical Code.

CODES, CMC is the 2010 California Mechanical Code.

CODES, CPC is the 2010 California Plumbing Code.

COEFFICIENT OF PERFORMANCE (COP), COOLING is the ratio of the rate of net heat removal to the rate of total energy input, calculated under designated operating conditions and expressed in consistent units, as determined using the applicable test method in the Appliance Efficiency Regulations or §110.2.

COEFFICIENT OF PERFORMANCE (COP), HEAT PUMP is the ratio of the rate of useful heat output delivered by the complete heat pump unit (exclusive of supplementary heating) to the corresponding rate of energy input, in consistent units and as determined using the applicable test method in Appliance Efficiency Regulations or §110.2.

COEFFICIENT OF PERFORMANCE (COP), HEATING is the ratio of the rate of useful heat output delivered by the complete heat pump unit (exclusive of supplementary heating) to the corresponding rate of energy input, in consistent units, and as determined using the applicable test method in the Appliance Efficiency Regulations or §110.2.

COMBINATION SPACE-HEATING AND WATER-HEATING APPLIANCE is an appliance that is designed to provide both space heating and water heating from a single primary energy source.

COMBINED HYDRONIC SPACE/WATER HEATING SYSTEM is a system which both domestic hot water and space heating is supplied from the same water heating equipment. Combined hydronic space heating may include both radiant floor systems and convective or fan coil systems.

COMBUSTION EFFICIENCY is a measure of the percentage of heat from the combustion of gas or oil that is transferred to the medium being heated or lost as jacket loss.

COMMERCIAL BOILER is a type of boiler with a capacity (rated max~~z~~imum input) of 300,000 Btus per hour (Btu/h) or more and serving a space heating or water heating load in a commercial building.

COMMISSION is the California State Energy Resources Conservation and Development Commission.

COMPLEX MECHANICAL SYSTEMS are systems that include 1) fan systems each serving multiple thermostatically controlled zones, or 2) built-up air handler systems (non-unitary or non-packaged HVAC equipment), or 3) hydronic or steam heating systems, or 4) hydronic cooling systems. Complex systems are NOT the following: (a) unitary or packaged equipment listed in Tables 110.2-A, 110.2-B, 110.2-C, and 110.2-E that each serve one zone or (b) two-pipe, heating only systems serving one or more zones.

COMPLIANCE APPROACH is any one of the allowable methods by which the design and construction of a building may be demonstrated to be in compliance with Part 6. The compliance approaches are the performance compliance approach and the prescriptive compliance approach. The requirements for each compliance approach are set forth in §100.0(e)2 of Part 6.

COMPLIANCE DOCUMENTS are any of the documentation specified in §10-103(a) utilized to demonstrate compliance with Part 6 (i.e. Certificate of Compliance, Certificate of Installation, Certificate of Acceptance, and Certificate of Verification).

COMPLIANCE OPTION is a method or procedure for demonstrating compliance with Title 24, Part 6 and Part 11, Division 4.2 and 5.2 of the California Code of Regulations through modifications of approved calculation methods.

COMPLIANCE SOFTWARE is software that has been approved pursuant to Section 10-109 of Part 1 of Title 24 of the California Code of Regulations, to demonstrate compliance with the performance approach of Part 6.

~~**COMPUTER ROOM** is a room whose primary function is to house electronic equipment and that has a design equipment power density exceeding 20 watts/ft2 (215 watts/m2) of conditioned floor.~~

CONDENSER SPECIFIC EFFICIENCY is the full load condenser Total Heat of Rejection (THR) capacity at standardized conditions divided by the fan input electric power (including but not limited to spray pump electric input power for evaporative condensers) at 100% rated fan speed.

CONDITIONED FLOOR AREA (CFA) is the floor area in square feet (ft^2) of enclosed conditioned space on all floors of a building, as measured at the floor level of the exterior surfaces of exterior walls enclosing the conditioned space.

CONDITIONED FOOTPRINT is a projection of all conditioned space on all floors to a vertical plane. The conditioned footprint area may be equal to the first floor area, or it may be greater, if upper floors project over lower floors. One way to think of the conditioned footprint area is as the area of the largest conditioned floor in the building plus the conditioned floor area of any projections from other stories that extend beyond the outline of that largest floor.

CONDITIONED SPACE is space in a building that is either directly conditioned or indirectly conditioned.

CONDITIONED SPACE, DIRECTLY is an enclosed space that is provided with wood heating, is provided with mechanical heating that has a capacity exceeding 10 Btu/hr-ft^2), or is provided with mechanical cooling that has a capacity exceeding 5 Btu/hr-ft^2 unless the space-conditioning system is designed for process load. (See “process load” and “process space”).

CONDITIONED SPACE, INDIRECTLY is enclosed space, including, but not limited to, unconditioned volume in atria, that (1) is not directly conditioned space; and (2) either (a) has a thermal transmittance area product (UA) to directly conditioned space exceeding that to the outdoors or to unconditioned space and does not have fixed vents or openings to the outdoors or to unconditioned space, or (b) is a space through which air from directly conditioned spaces is transferred at a rate exceeding three air changes per hour.

CONDITIONED VOLUME is the total volume in cubic feet (ft^3) of the conditioned space within a building.

CONSTRUCTION LAYERS are roof, wall and floor constructions which represent an assembly of layers. Some layers are homogeneous, such as gypsum board and plywood sheathing, while other layers are non-homogeneous such as the combination of wood framing and cavity insulation typical in many buildings.

CONTINUOUS AIR BARRIER See Air Barrier

CONTINUOUS INSULATION (c.i.) is insulation that is continuous across all assemblies that separate conditioned from unconditioned space. It is installed on the exterior or interior or is integral to any opaque surface of the building envelope and has no thermal bridges other than fasteners and necessary service openings.

CONTROLLED ATMOSPHERE is an airtight space maintained at reduced oxygen levels for the purpose of reducing respiration of perishable product in longterm storage.

CONTROLLED VENTILATION CRAWL SPACE (CVC) is a crawl space in a residential building where the side walls of the crawlspace are insulated rather than the floor above the crawlspace. A CVC has

automatically controlled crawl space vents. Credit for a CVC is permitted for low-rise residential buildings that use the performance approach to compliance.

COOLER is a space to be capable of operation at a temperature greater than or equal to 28°F but less than 55°F.

COOL ROOF is a roofing material with high thermal emittance and high solar reflectance, or low thermal emittance and exceptionally high solar reflectance as specified in Part 6 that reduces heat gain through the roof.

COOL ROOF RATING COUNCIL (CRRC) is a not-for-profit organization designated by the Commission as the Supervisory Entity with responsibility to rate and label the reflectance and emittance of roof products.

COOLING COIL AIRFLOW Is the air flow through the evaporator (indoor) coil of a direct expansion air conditioning unit in cooling mode. The air flow is expressed in cubic feet per minute (CFM) or liter per second (L/S) of standard air (standard air has a density of 0.075 lb/ft³).

COOLING EQUIPMENT is equipment used to provide mechanical cooling for a room or rooms in a building.

COOLING LOAD is the rate at which heat must be extracted from a space to maintain a desired room condition.

COOLING LOAD TEMPERATURE DIFFERENCE (CLTD) is an equivalent temperature difference used for calculating the instantaneous external cooling loads across a wall or roof. The cooling load is the CLTD x U-factor x Area.

COP See Coefficient of Performance.

COURTYARD is an open space through one or more floor levels surrounded by walls within a building.

CRAWL SPACE is a space immediately under the first floor of a building adjacent to grade.

CRRC See Cool Roof Rating Council.

CRRC-1 is the Cool Roof Rating Council document titled "Product Rating Program Manual." (2002)

CTI is the Cooling Technology Institute.

CTI ATC-105 is the Cooling Technology Institute document titled "Acceptance Test Code for Water Cooling Towers," 2000 (CTI ATC-105-00).

CTI ATC-105S(11) is the Cooling Technology Institute document titled "Acceptance Test Code for Closed-Circuit Cooling Towers," 2011 (CTI ATC-105-11).

CTI STD-201 is the Cooling Technology Institute document titled "Standard for Thermal Performance Certification of Evaporative Heat Rejection Equipment," 2011 (CTI STD-201-11).

CURRENT AIR DEMAND is the actual cubic feet per minute (acfm) of total airflow necessary for end uses in a compressed air system.

CUSTOM ENERGY BUDGET See Energy Budget.

C-VALUE (ALSO KNOWN AS C-FACTOR) is the time rate of heat flow through unit area of a body induced by a unit temperature difference between the body surfaces, in Btu (hr. x ft.2 x °F). It is not the same as K-value or K-factor.

CYCLES OF CONCENTRATION is the number of times the concentration of total dissolved (TDS) in cooling tower water is multiplied relative to the TDS in the makeup water. Because evaporation of pure water leaves dissolved solids behind in the system water, TDS increases over time as the tower operates. The number of times the dissolved minerals are concentrated is relative to the TDS in the makeup water. For example, five cycles of concentration represents five times the concentration of solids in the cooling tower system water relative to the TDS in the makeup water entering the tower.

CRRC-1 is the Cool Roof Rating Council document titled "Product Rating Program."

DATA CENTER is a building whose primary function is to house electronic equipment and that has a design equipment power density exceeding 20 watts/ft2 (215 watts/m2) of conditioned floor.

~~**DAYLIT ZONE** is the floor area under skylights or next to windows. Types of Daylit Zones include Primary Sidelit Daylit Zone, Secondary Sidelit Daylit Zone, Secondary Sidelit Daylit Zone, and Skylit Daylit Zone.~~

DATA REGISTRY is a web service with a user interface and database maintained by a Registration Provider that complies with the applicable requirements in Reference Joint Appendix JA7, with guidance from the Data Registry Requirements Manual, and provides for registration of residential or nonresidential compliance documentation used for demonstrating compliance with Part 6.

> **RESIDENTIAL DATA REGISTRY** is a data registry that is maintained by a HERS Provider that provides for registration when required by Part 6 of all residential compliance documentation and the nonresidential Certification of Verification.
>
> **NONRESIDENTIAL DATA REGISTRY** is a data registry that is maintained by the Registration Provider approved by the Commission that provides for registration, when required by Part 6, of all nonresidential documentation. However, nonresidential data registries may not provide for registration of nonresidential Certificate of Verification.

DATA REGISTRY REQUIREMENTS MANUAL is a document that provides additional detailed guidance regarding the functional and technical aspects of the Data Registry requirements given in Reference Joint Appendix JA7.

<u>**DAYLIT ZONE** is the floor area under skylights or next to windows. Types of Daylit Zones include Primary Sidelit Daylit Zone, Secondary Sidelit Daylit Zone, Secondary Sidelit Daylit Zone, and Skylit Daylit Zone.</u>

DEADBAND is the temperature range within which the HVAC system is neither calling for heating or cooling.

DECORATIVE GAS APPLIANCE is a gas appliance that is designed or installed for visual effect only, cannot burn solid wood, and simulates a fire in a fireplace.

DEGREE DAY, HEATING is a unit, based upon temperature difference and time, used in estimating fuel consumption and specifying nominal annual heating load of a building. For any one day, when the mean temperature is less than 65°F, there exist as many degree days as there are Fahrenheit degrees difference in temperature between the mean temperature for the day and 65°F. The number of degree days for specific geographical locations are those listed in the Reference Joint Appendix JA2. For those localities not listed in the Reference Joint Appendix JA2, the number of degree days is as determined by the applicable enforcing agency.

DEMAND RESPONSE is short-term changes in electricity usage by end-use customers from their normal consumption patterns. Demand response may be in response to

(a) a change in the price of electricity; or

(b) participation in programs or services designed to modify electricity use:

1. in response to wholesale market prices; or
2. when system reliability is jeopardized.

> **DEMAND RESPONSE PERIOD** is a period of time during which electricity loads are modified in response to a demand response signal.
>
> **DEMAND RESPONSE SIGNAL** is a signal sent by the local utility, Independent System Operator (ISO), or designated curtailment service provider or aggregator, to a customer, indicating a price or a request to modify electricity consumption, for a limited time period.
>
> **DEMAND RESPONSIVE CONTROL** is a kind of control that is capable of receiving and automatically responding to a demand response signal.

DEMISING PARTITION is a wall, fenestration, floor, or ceiling that separates conditioned space from enclosed unconditioned space.

DEMISING WALL is a wall that is a demising partition.

DENSITY is the mass per unit volume of a construction material as documented in an ASHRAE handbook, a comparably reliable reference or manufacturer's literature.

DEPLETABLE SOURCES is energy obtained from electricity purchased from a public utility, or energy obtained from burning coal, oil, natural gas, or liquefied petroleum gases.

DESIGN CONDITIONS are the parameters and conditions used to determine the performance requirements of space-conditioning systems. Design conditions for determining design heating and cooling loads are specified in §140.4(b) for nonresidential, high-rise residential, and hotel/motel buildings and in §150.0 (h) for low-rise residential buildings.

DESIGN HEAT GAIN RATE is the total calculated heat gain through the building envelope under design conditions.

DESIGN HEAT LOSS RATE is the total calculated heat loss through the building envelope under design conditions.

DESIGN REVIEW is an additional secondary review of the construction documents (drawings and specifications) that seeks to improve compliance with existing Title 24 regulations, encourage adoption of best practices in design, and encourage designs that are constructable and maintainable. It is an opportunity for an experienced design engineer to look at a project with a fresh perspective in an effort to catch missing or unclear design information and to suggest design enhancements.

DEW POINT TEMPERATURE is the vapor saturation temperature at a specified pressure for a substance undergoing phase change from vapor to liquid.

DIRECT DIGITAL CONTROL (DDC) is a type of control where controlled and monitored analog or binary data, such as temperature and contact closures, are converted to digital format for manipulation and calculations by a digital computer or microprocessor, then converted back to analog or binary form to control mechanical devices.

DIRECTLY CONDITIONED SPACE is an enclosed space that is provided with wood heating, is provided with mechanical heating that has a capacity exceeding 10 Btu/(hr.×ft.^{2}), or is provided with mechanical cooling that has a capacity exceeding 5 Btu/(hr.×ft.^{2}), unless the space-conditioning system is designed and thermostatically controlled to maintain a process environment temperature less than 55°F or to maintain a process environment temperature greater than 90°F for the whole space that the system serves, or unless the space-conditioning system is designed and controlled to be incapable of operating at temperatures above 55°F or incapable of operating at temperatures below 90°F at design conditions.

DISPLAY PERIMETER is the length of an exterior wall in a Group B; Group F, Division 1; or Group M Occupancy that immediately abuts a public sidewalk, measured at the sidewalk level for each story that abuts a public sidewalk.

DIVIDERS are wood, aluminum or vinyl glazing dividers including mullions, muntins, munnions and grilles. Dividers may truly divide lights, be between the panes, or be applied to the exterior or interior of the glazing.

DOCUMENTATION AUTHOR is a person who prepares a Title 24, Part 6 document that must subsequently be reviewed and signed by a responsible person in order to certify compliance with Part 6.

DOMINANT OCCUPANCY is the occupancy type in mixed occupancy buildings with the greatest percentage of total conditioned floor area.

DUCT LOSSES is heat transfer into or out of a space conditioning system duct through conduction or leakage.

DUCT SEALING is a procedure for installing a space conditioning distribution system that minimizes leakage of air from or to the distribution system. Minimum specifications for installation procedures, materials, diagnostic testing and field verification are contained in the Reference Residential Appendix RA3 and Reference Nonresidential Appendix NA2.

DUCT SYSTEM Includes all ducts, duct fittings, plenums and fans assembled to form a continuous passageway for the distribution of air.

> **ENTIRELY NEW OR REPLACEMENT DUCT SYSTEMS** installed as part of an alteration of a dwelling unit's space conditioning system(s) shall be constructed of at least 75% new duct material and may include reused parts from the dwelling unit's existing duct system (e.g. registers, boots, air handler, coil,

plenums, duct material, etc.) but only if the reused parts are accessible and they can be sealed to prevent leakage.

Duv is the closest distance from the chromaticity coordinate of the light source to the Planckian locus on the CIE (u', 2/3 v') coordinates with "+" sign for above and "-" sign for below the Planckian locus.

DWELLING is a building that contains one or two dwelling units used, intended or designed to be used, rented, leased, let or hired out to be occupied for living purposes.

DWELLING UNIT is a single unit providing complete, independent living facilities for one or more persons including permanent provisions for living, sleeping, eating, cooking and sanitation.

EAST-FACING See Orientation.

ECONOMIZER, AIR is a ducting arrangement, including dampers, linkages, and an automatic control system, that allows a cooling supply fan system to supply outside air to reduce or eliminate the need for mechanical cooling.

ECONOMIZER, WATER is a system by which the supply air of a cooling system is cooled directly or indirectly by evaporation of water, or other appropriate fluid, in order to reduce or eliminate the need for mechanical cooling.

EDGE OF GLASS is the portion of fenestration glazing that is within two and one half inches of the spacer.

EER See Energy Efficiency Ratio.

ELECTRIC HEATING is an electrically powered heating source, such as electric resistance, heat pumps with no auxiliary heat or with electric auxiliary heat, solar with electric back-up, etc.

ELECTRIC RESISTANCE HEATING is a heating system that converts electric energy directly into heat energy by passing a current through an electric resistance. Electric resistance heat is inherently less efficient than gas as a heating energy source because it must account for losses associated with generation from depletable fossil fuels and transmission to the building site.

ELECTRONICALLY-COMMUTATED MOTOR is a brushless DC motor with a permanent magnet rotor that is surrounded by stationary motor windings, and an electronic controller that varies rotor speed and direction by sequentially supplying DC current to the windings.

EMITTANCE, THERMAL is the ratio of the radiant heat flux emitted by a sample to that emitted by a blackbody radiator at the same temperature.

ENCLOSED SPACE is space that is substantially surrounded by solid surfaces, including walls, ceilings or roofs, doors, fenestration areas, and floors or ground.

ENERGY BUDGET is the maximum amount of Time Dependent Valuation (TDV) energy that a proposed building, or portion of a building, can be designed to consume, calculated with the approved procedures specified in Part 6.

ENERGY COMMISSION See Commission.

ENERGY EFFICIENCY RATIO (EER) is the ratio of net cooling capacity (in Btu/hr.) to total rate of electrical energy input (in watts), of a cooling system under designated operating conditions, as determined using the applicable test method in the Appliance Efficiency Regulations or §110.2.

ENERGY EFFICIENCY STANDARDS See Building Energy Efficiency Standards.

ENERGY FACTOR (EF) of a water heater is a measure of overall water heater efficiency as determined using the applicable test method in the Appliance Efficiency Regulations.

ENERGY MANAGEMENT CONTROL SYSTEM (EMCS) is a computerized control system designed to regulate the energy consumption of a building by controlling the operation of energy consuming systems, such as the heating, ventilation and air conditioning (HVAC), lighting, and water heating systems, and is capable of monitoring environmental and system loads, and adjusting HVAC operations in order to optimize energy usage and respond to demand response signals.

ENERGY OBTAINED FROM DEPLETABLE SOURCES is electricity purchased from a public utility, or any energy obtained from coal, oil, natural gas, or liquefied petroleum gases.

ENERGY OBTAINED FROM NONDEPLETABLE SOURCES is energy that is not energy obtained from depletable sources.

ENERGY STAR Start Time Test Method is the ENERGYSTAR program document entitled "ENERGY STAR Program Requirements for Lamps Version 1.0 – Start Time Test Method – Final" (August-2013)

ENERGY STAR Ambient Temperature Life Test Method is the ENERGYSTAR program document entitled "ENERGY STAR Program Requirements for Lamps Version 1.0 - Ambient Temperature Life Test Method – Fina"l (August-2013)

ENERGY STAR Elevated Temperature Light Output Ratio Test Method is the ENERGY STAR program document entitled "ENERGY STAR Program Requirements for Lamps Version 1.0 – Elevated Temperature Light Output Ratio Test Method – Final" (August-2013)

ENERGY STAR Elevated Temperature Life Test Method is the ENERGY STAR program document entitled "ENERGY STAR Program Requirements for Lamps Version 1.0 – Elevated Temperature Life Test Method – Final" (August-2013)

ENERGY STAR Product Specification for Lamps Noise Recommended Practice is the ENERGY STAR program document entitled, "ENERGY STAR Program Requirements for Lamps Version 1.0 – Noise Recommended Practice – Final" (August-2013).

ENFORCEMENT AGENCY is the city, county or state agency responsible for approving the plans, issuing a building permit and approving occupancy of the dwelling unit.

ENTIRE BUILDING is the ensemble of all enclosed space in a building, including the space for which a permit is sought, plus all existing conditioned and unconditioned space within the structure.

ENVELOPE See Building Envelope.

EVAPORATIVE COOLER provides cooling to a building by either direct contact with water (direct evaporative cooler), no direct contact with water (indirect evaporative cooler), or a combination of direct and indirect cooling (indirect/direct evaporative cooler). The credit offered for evaporative coolers depends on building type and climate.

EXCEPTIONAL METHOD is a method for estimating the energy performance of building features that cannot be adequately modeled using the public domain computer programs and that is approved by the Executive Director.

EXECUTIVE DIRECTOR is the Executive Director of the Commission.

EXFILTRATION is uncontrolled outward air leakage from inside a building, including leakage through cracks and interstices, around windows and doors, and through any other exterior partition or duct penetration.

EXPOSED THERMAL MASS is mass that is directly exposed (uncovered) to the conditioned space of the building. Concrete floors that are covered by carpet are not considered exposed thermal mass.

EXTERIOR FLOOR/SOFFIT is a horizontal exterior partition, or a horizontal demising partition, under conditioned space. For low-rise residential occupancies, exterior floors also include those on grade.

EXTERIOR PARTITION is an opaque, translucent, or transparent solid barrier that separates conditioned space from ambient air or space. For low-rise residential occupancies, exterior partitions also include barriers that separate conditioned space from unconditioned space, or the ground.

EXTERIOR ROOF/CEILING is an exterior partition, or a demising partition, that has a slope less than 60 degrees from horizontal, that has conditioned space below, and that is not an exterior door or skylight.

EXTERIOR ROOF/CEILING AREA is the area of the exterior surface of exterior roof/ceilings.

EXTERIOR WALL is any wall or element of a wall, or any member or group of members, which defines the exterior boundaries or courts of a building and which has a slope of 60 degrees or greater with the horizontal plane. An exterior wall or partition is not an exterior floor/soffit, exterior door, exterior roof/ceiling, window, skylight, or demising wall.

EXTERIOR WALL AREA is the area of the opaque exterior surface of exterior walls.

FACTORY ASSEMBLED COOLING TOWERS are cooling towers constructed from factory-assembled modules either shipped to the site in one piece or put together in the field.

FENESTRATION definitions include the following:

ACE is an NFRC-Approved Calculation Entity (ACE) that conducts calculations of fenestration product ratings for certification authorization using the NFRC Component Modeling approach and issues label certificates to Specifying Authorities for product certification authorization in accordance with NFRC requirements.

ALTERATION is any change to an existing building's exterior fenestration product that is not a repair (see Fenestration Repair) that:

(a) Replaces existing fenestration in an existing wall or roof with no net area added is considered an alteration and is subject to the Alteration Section in Part 6; or

(b) Replaces existing fenestration and adds new net area in the existing wall or roof; is subject to the Alteration Section in Part 6.

(c) Adds a new window that increases the net fenestration area to an existing wall or roof. New added window is not subject to the maximum window wall ration in Part 6.

ALTERED COMPONENT is a new fenestration component that has undergone an alteration other than a repair and is subject to all applicable Standards requirements.

BAY WINDOW is a combination assembly which is composed of three or more individual windows either joined side by side or installed within opaque assemblies and which projects away from the wall on which it is installed. Center windows, if used are parallel to the wall on which the bay is installed, the end panels or two side windows are angled with respect to the center window. Common angles are 30° and 45°, although other angles may be employed.

CMA (Component Modeling Approach) is a Fenestration Product Certification Program from the National Fenestration Rating Council (NFRC) which enables energy-related performance ratings for nonresidential fenestration products, including the thermal performance U-factor, Solar Heat Gain Coefficient, and Visible Transmittance.

CENTER OF GLASS U-FACTOR is the U-factor for the glass portion only of vertical or horizontal fenestration and is measured at least two and one half inches from the frame. Center of glass U-factor does not consider the U-factor of the frame.

CMAST (Component Modeling Approach Software Tool) is an NFRC approved software that allows a user to create a fenestration product “virtually” and generate its energy-related performance ratings, including the thermal performance U-factor, Solar Heat Gain Coefficient, and Visible Transmittance.

CURTAIN WALL/STOREFRONT is an external nonbearing wall intended to separate the exterior non-conditioned and interior conditioned spaces. It also consists of any combination of framing materials, fixed glazing, opaque glazing, operable windows, or other in-fill materials.

GLAZED DOOR is an exterior door having a glazed area of 50 percent or greater of the area of the door.

DUAL-GLAZED GREENHOUSE WINDOWS is a double glass pane separated by an air or other gas space that adds conditioned volume but not conditioned floor area to a building.

DYNAMIC GLAZING SYSTEMS are glazing systems that have the ability to reversibly change their performance properties, including U-factor, Solar Heat Gain Coefficient (SHGC) and/or Visible Transmittance (VT) between well-defined end points. These may include, but are not limited to chromogenic glazing systems and integrated shading systems (Defined below). Dynamic Glazing systems do not include internally mounted or externally mounted shading devices that attach to the window framing/glazing that may or may not be removable.

(a) **CHROMOGENIC GLAZING** is a class of switchable glazing that includes active materials (e.g. electrochromic) and passive materials (e.g. photochromic and thermochromic) permanently integrated into the glazing assembly. Their primary function is to switch reversibly from a high transmission state to a low transmission state with associated changes in VT and SHGC.

(b) **INTEGRATED SHADING SYSTEM** is a class of fenestration products including an active layer: e.g. shades, louvers, blinds or other materials permanently integrated between two or more glazing layers. The U-factor and/or SHGC and VT of the insulating glass assembly can be altered by reversibly changing the enclosed active layer.

FAÇADE is the contiguous exterior of a building surface, but not limited to fenestration products.

FENESTRATION AREA for windows is the total window rough opening area which includes the fenestration, fenestration frame components in the exterior walls and roofs.

FENESTRATION PRODUCT is any transparent or translucent material plus any sash, frame, mullions and dividers, in the facade of a building, including, but not limited to, windows, sliding glass doors, French doors, skylights, curtain walls, dynamic glazing, garden windows and glass block.

FENESTRATION REPAIR shall not increase the preexisting energy consumption of the repaired component, system, or equipment. Replacement of any component, system, or equipment for which there are requirements in the Standards are considered an alteration (see Fenestration, Alterations) and not a repair and is subject to the requirements of Part 6 of the Standard.

FIELD-FABRICATED is a fenestration product whose frame is made at the construction site of standard dimensional lumber or other materials that were not previously cut, or otherwise formed with the specific intention of being used to fabricate a fenestration product. Field fabricated does not include site-built fenestration.

FIN is an opaque surface, oriented vertically and projecting outward horizontally from an exterior vertical surface.

(a) **FIN OFFSET** is the horizontal distance from the edge of exposed exterior glazing at the jamb of a window to the fin.

(b) **FIN PROJECTION** is the horizontal distance, measured outward horizontally, from the surface of exposed exterior glazing at the jamb of a window to the outward edge of a fin.

(c) **SIDE FINS** are vertical shading elements mounted on either side of a glazed opening that can protect the glazing from lateral low angle sun penetration.

FIXED is fenestration that is not designed to be opened or closed.

GREENHOUSE or GARDEN WINDOW is a window unit that consists of a three-dimensional, five-sided structure generally protruding from the wall in which it is installed. Operating sash may or may not be included.

LOW-E COATING is a low emissivity metallic coating applied to glazing in fenestration products. See Soft Coat and Hard Coat.

(a) **HARD COAT** is a low emissivity metallic coating applied to the glass, which will be installed in a fenestration product, through a pyrolytic process (at or near the melting point of the glass so that it bonds with the surface layer of glass). Hard coatings are less susceptible to oxidation and scratching as compared to soft coats. Hard coatings generally do not have as low emissivity as soft coats.

(b) **SOFT COAT** is a low emissivity metallic coating applied to glass, which will be installed in a fenestration product through a sputter process where molecules of metals such as stainless steel or titanium are sputtered onto the surface of glass. Soft coats generally have lower emissivity than hard coats.

MANUFACTURED or KNOCKED DOWN PRODUCT is a fenestration product constructed of materials which are factory cut or otherwise factory formed with the specific intention of being used

to fabricate a fenestration product. However a "knocked-down or partially assembled product, sold as a fenestration product is also a manufactured fenestration product when provided with temporary and permanent labels as described in Section 10-111; otherwise it is a site-built fenestration product when not provided with temporary and permanent labels as described in Section 10-111.

NFRC 100 is the National Fenestration Rating Council document titled "NFRC 100: Procedure for Determining Fenestration Product U-factors." (2011; NFRC 100 includes procedures for site fenestration formerly included in a separate document, NFRC 100-SB).

NFRC 200 is the National Fenestration Rating Council document titled "NFRC 200: Procedure for Determining Fenestration Product Solar Heat Gain Coefficients and Visible Transmittance at Normal Incidence." (2011).

NFRC 202 is the National Fenestration Rating Council document entitled "NFRC 202: Procedures for Determining Translucent Fenestration Product Visible Transmittance at Normal Incidence." (2011).

NFRC 203 is the National Fenestration Rating Council document entitled "NFRC 203: Procedure for Determining Visible Transmittance of Tubular Daylighting Devices." (2012).

NFRC 400 is the National Fenestration Rating Council document titled "NFRC 400: Procedure for Determining Fenestration Product Air Leakage." (2010).

OPERABLE is fenestration that is designed to be opened or closed.

OPERABLE SHADING DEVICE is a device at the interior or exterior of a building or integral with a fenestration product, which is capable of being operated, either manually or automatically, to adjust the amount of solar radiation admitted to the interior of the building.

OVERHANG is a contiguous opaque surface, oriented horizontally and projecting outward horizontally from an exterior vertical surface.

OVERHANG OFFSET is the vertical distance from the edge of exposed exterior glazing at the head of a window to the overhang.

OVERHANG PROJECTION is the horizontal distance, measured outward horizontally from the surface of exposed exterior glazing at the head of a window to the outward edge of an overhang.

RELATIVE SOLAR HEAT GAIN is the ratio of solar heat gain through a fenestration product (corrected for external shading) to the incident solar radiation. Solar heat gain includes directly transmitted solar heat and absorbed solar radiation, which is then reradiated, conducted, or convected into the space.

SITE-BUILT is fenestration designed to be field-glazed or field assembled units using specific factory cut or otherwise factory formed framing and glazing units, that are manufactured with the intention of being assembled at the construction site. These include storefront systems, curtain walls, and atrium roof systems.

SKYLIGHT is fenestration installed on a roof less than 60 degrees from the horizontal.

SKYLIGHT AREA is the area of the rough opening for the skylight.

SKYLIGHT TYPE Is one of the following three types of skylights: glass mounted on a curb, glass not mounted on a curb or plastic (assumed to be mounted on a curb).

SOLAR HEAT GAIN COEFFICIENT (SHGC) is the ratio of the solar heat gain entering the space through the fenestration area to the incident solar radiation. Solar heat gain includes directly transmitted solar heat and absorbed solar radiation, which is then reradiated, conducted, or convected into the space.

SOLAR HEAT GAIN COEFFICIENT, CENTER OF GLAZING (SHGCc) is the SHGC for the center of glazing area.

SOLAR HEAT GAIN COEFFICIENT, TOTAL FENESTRATION PRODUCT (SHGC or SHGCT) is the SHGC for the total fenestration product.

SPANDREL PANEL is opaque glazing material most often used to conceal building elements between floors of a building so they cannot be seen from the exterior, also known as "opaque in-fill systems."

TINTED GLASS is colored glass by incorporation of a mineral admixture resulting in a degree of tinting. Any tinting reduces both visible and radiant transmittance.

U-FACTOR, CENTER OF GLAZING (Uc) is the U-Factor for the center of glazing area.

U-FACTOR, TOTAL FENESTRATION PRODUCT (U_t) is the U-Factor for the total fenestration product.

VISIBLE TRANSMITTANCE (VT) is the ratio (expressed as a decimal) of visible light that is transmitted through a glazing fenestration.The higher the VT rating, the more light is allowed through a window.

VISIBLE TRANSMITTANCE, CENTER OF GLAZING (VTC) the VT for the center of glazing area.

VISIBLE TRANSMITTANCE, TOTAL FENESTRATION PRODUCT (VT or VTt) is the VT for the total fenestration product.

VISIBLE TRANSMITTANCE (VT) is the ratio (expressed as a decimal) of visible light that is transmitted through a glazing fenestration. The higher the VT rating, the more light is allowed through a window.

WINDOW is fenestration that is not a skylight and that is an assembled unit consisting of a frame and sash component holding one or more pieces of glazing.

WINDOW AREA is the area of the surface of a window, plus the area of the frame, sash, and mullions.

WINDOW FILM is fenestration attachment products which consist of a flexible adhesive-backed polymer film which may be applied to the interior or exterior surface of an existing glazing system.

WINDOW WALL RATIO Is the ratio of the window area to the gross exterior wall area.

FIELD ERECTED COOLING TOWERS are cooling towers which are custom designed for a specific application and which cannot be delivered to a project site in the form of factory assembled modules due to their size, configuration, or materials of construction.

FIELD TECHNICIAN is a person who performs acceptance tests in accordance with the specifications in Reference Nonresidential Appendix NA-7 and reports the results of the acceptance tests on the Certificate of Acceptance document, in accordance with the requirements of §10-103(a)4.

FIREPLACE is a hearth and fire chamber or similar prepared place in which a fire may be made and which is built in conjunction with a flue or chimney, including but not limited to factory-built fireplaces, masonry fireplaces, and masonry heaters as further clarified in the CBC.

FLOOR AREA is the floor area (in square feet) of enclosed conditioned or unconditioned space on all floors of a building, as measured at the floor level of the exterior surfaces of exterior walls enclosing the conditioned or unconditioned space.

FLOOR/SOFFIT TYPE is a floor/soffit assembly having a specific heat capacity, framing type, and U-factor.

FLUID COOLER is a fan-powered heat rejection device that includes a water or glycol circuit connected by a closed circulation loop to a liquid-cooled refrigerant condenser, and may be either evaporative-cooled, air-cooled or a combination of the two.

FOOD PREPARATION EQUIPMENT is cooking equipment intended for commercial use, including coffee machines, espresso coffee makers, conductive cookers, food warmers including heated food servers, fryers, griddles, nut warmers, ovens, popcorn makers, steam kettles, ranges, and cooking appliances for use in commercial kitchens, restaurants, or other business establishments where food is dispensed.

FOSSIL FUELS are fuels which are derived from natural gas, coal, oil and liquefied petroleum products. These are generally nonrenewable resources, although natural gas may also be produced by other means, such as biomass conversion.

FRAMED PARTITION OR ASSEMBLY is a partition or assembly constructed using separate structural members spaced not more than 32 inches on center.

FRAMING EFFECTS is the effect on the overall U-factor due to the type and amount of framing in walls, roofs/ceilings and floors. For compliance, fixed values for wood framing percentages are assumed when calculating U-factors.

FRAMING PERCENTAGE is the fraction of the surface of a partition that is framing as compared to that portion which is cavity.

FREEZER is a space designed to maintain less than 28°F.

FRONT is the primary entry side of the building (front facade) used as a reference in defining the orientation of the building or unit plan. The orientation of the front facade may not always be the same as that for the front door itself.

GAP WIDTH is the distance between lites in multi-glazed systems. This is typically measured from inside surface to inside surface, though some manufacturers may report "overall" insulated glass (IG) width, which is measured from outside surface to outside surface.

GAS COOLING EQUIPMENT is cooling equipment that produces chilled water or cold air using natural gas or liquefied petroleum gas as the primary energy source.

GAS HEATING SYSTEM is a system that uses natural gas or liquefied petroleum gas as fuel to heat a conditioned space.

GAS INFILLS are air, argon, krypton, CO_2, SF6, or a mixture of these gasses between the panes of glass in insulated glass units.

GAS LOG is a self-contained, free-standing, open-flame, gas-burning appliance consisting of a metal frame or base supporting simulated logs, and designed for installation only in a vented fireplace.

GEOTHERMAL HEAT PUMP See Ground Source Heat Pump.

GLAZING See Fenestration Product.

GLAZING AREA See Fenestration Area.

GLOBAL WARMING POTENTIAL (GWP) is the radiative forcing impact of one mass-based unit of a given greenhouse gas relative to an equivalent unit of carbon dioxide over a given period of time.

GLOBAL WARMING POTENTIAL VALUE (GWP VALUE) is the 100-yr GWP value first published by the Intergovernmental Panel on Climate Change (IPCC) in its Second Assessment Report (SAR) (IPCC, 1995; or if a 100-yr GWP value was not specified in the IPCC SAR, it means the GWP value published by the IPCC in its Fourth Assessment A-3 Report (AR4) (IPCC, 2007); or if a 100-yr GWP value was not specified in the IPCC AR4, then the GWP value will be determined by the Commission based on data, studies and/or good engineering or scientific judgment. Both the 1995 IPCC SAR values and the 2007 IPCC AR4 values are published in table 2.14 of the 2007 IPCC AR4. The SAR GWP values are found in column "SAR (100-yr)" of Table 2.14.; the AR4 GWP values are found in column "100 yr" of Table 2.14."

GOVERNMENTAL AGENCY is any public agency or subdivision thereof, including, but not limited to, any agency of the state, a county, a city, a district, an association of governments, or a joint power agency.

GRILLES See Dividers.

GROSS EXTERIOR ROOF AREA is the sum of the skylight area and the exterior roof/ceiling area.

GROSS EXTERIOR WALL AREA is the sum of the window area, door area, and exterior wall area.

GROUND FLOOR AREA is the slab-on-grade area of a slab-on-grade building and the conditioned footprint area of a raised floor building (for compliance with the low-rise residential standards).

GROUND SOURCE HEAT PUMP is a heat pump that uses the earth as a source of energy for heating and a sink for energy when cooling. Some systems pump water from an aquifer in the ground and return the water to the ground after transferring heat from or to the water. A few systems use refrigerant directly in a loop of piping buried in the ground. Those heat pumps that use either a water loop or pump water from an aquifer have efficiency test methods that are accepted by the Energy Commission. These efficiency values

are certified to the Energy Commission by the manufacturer and are expressed in terms of heating Coefficient of Performance (COP) and cooling Energy Efficiency Ratio (EER).

HABITABLE SPACE is building space intended for continual human occupancy; such space generally includes areas used for living, sleeping, dining, and cooking but does not generally include bathrooms, toilets, hallways, storage areas, closets or utility rooms.

HABITABLE STORY is a story that contains space in which humans may work or live in reasonable comfort, and that has at least 50 percent of its volume above grade.

HEAT CAPACITY (HC) or thermal capacity is the measurable physical quantity that characterizes the amount of heat required to change a substance's temperature by a given amount.

HEAT PUMP is an appliance, that consists of one or more assemblies; that uses an indoor conditioning coil, a compressor, and a refrigerant-to-outdoor air heat exchanger to provide air heating; and that may also provide air cooling, dehumidifying, humidifying, circulating, or air cleaning.

HEATED SLAB FLOOR is a concrete floor, either on-grade, raised, or a lightweight concrete slab topping. Heating is provided by a system placed within or under the slab, and is sometimes referred to as a radiant slab floor.

HEATING EQUIPMENT is equipment used to provide mechanical heating for a room or rooms in a building.

HEATING SEASONAL PERFORMANCE FACTOR (HSPF) is the total heating output of a central air-conditioning heat pump (in Btu) during its normal use period for heating divided by the total electrical energy input (in watt-hours) during the same period, as determined using the applicable test method in the Appliance Efficiency Regulations.

HERS Is the California Home Rating System as described in Title 20, Chapter 4, Article 8, Section 1670.

HERS PROVIDER is an organization that administers a home energy rating system as described in Title 20, Chapter 4, Article 8, Section 1670.

HERS PROVIDER DATA REGISTRY is a residential data registry maintained by an approved HERS provider.

HERS RATER is a person who has been trained, tested, and certified by a HERS Provider to perform the field verification and diagnostic testing required for demonstrating compliance with the Part 6, as described in Title 20, Chapter 4, Article 8, Section 1670.

HI is the Hydronics Institute of the Gas Appliance Manufacturers Association (GAMA).

HI HTG BOILER STANDARD is the Hydronics Institute document titled “Testing and Rating Standard for Rating Boilers,” 1989.

HIGH-RISE RESIDENTIAL BUILDING is a building, other than a hotel/motel, of Occupancy Group R, Group R-2 or R-4 with four or more stories.

HOME ENERGY RATING SYSTEM (HERS) PROVIDER See HERS Rater.

HOOD is a device designed to capture and contain cooking effluent including, grease, smoke, steam, heat, and vapor until it is exhausted through a duct or recirculating system. Hoods are categorized as Type 1 or Type 2:

> **TYPE I HOOD** is a hood used for collecting and removing convective heat, grease particulate, condensable vapor, and smoke. It includes listed grease filters, baffles, or extractors for removing the grease and a fire-suppression system. Type I hoods are installed over cooking appliances, such as ranges, fryers, griddles, broilers, and ovens, that produce smoke or grease-laden vapors. For Type I hoods, the following types of hoods are commonly available:
>
> > **WALL-MOUNTED CANOPY HOOD** is mounted against a wall above a single appliance or a line of appliances, or it may be free-standing with a vertical back panel extending from the rear of the appliance(s) to the hood. It typically extends beyond the front and sides of the appliance(s) on all open sides. The wall acts as a back panel, forcing replacement air to be drawn across the front and/or side(s) of the cooking appliance, thus increasing the effectiveness of the hood to capture and contain effluent generated by the cooking operations.

SINGLE ISLAND CANOPY HOOD is placed over a single appliance or line of appliances. It is open on all sides and overhangs the front, rear, and sides of the appliance(s). A single island canopy is more susceptible to cross-drafts and requires a greater exhaust airflow than an equivalent sized wall-mounted canopy to capture and contain effluent generated by the cooking operations.

DOUBLE ISLAND CANOPY HOOD is placed over back-to-back appliances or lines of appliances. It is open on all sides and overhangs the front and the sides of the appliance(s). It may have a wall panel between the backs of the appliances.

BACKSHELF or PROXIMITY HOOD is a low-proximity hood, or a wall-mounted sidewall hood that:

(a) is positioned lower in height and depth than a canopy hood;

(b) is set back from the front of the appliance;

(c) is closed to the rear of the appliances by (a) a panel when the appliance is freestanding, or (b) a panel or wall when the appliance is wall mounted, and;

(d) is located above the cooking surface.

This style of hood can be constructed with partial end panels to increase its effectiveness in capturing the effluent generated by the cooking operations.

EYEBROW HOOD is mounted directly to the face or top of an appliance above the opening(s) or door(s) from which effluent is emitted, overhanging the front of the opening(s) to capture the effluent.

PASS-OVER HOOD is a back shelf hood constructed and installed low enough to allow food to be passed over the top.

TYPE II HOOD is a type of hood that collects and removes steam, heat, and products of combustion where grease or smoke is not present. It may or may not have grease filters or baffles and is not required to have a fire-suppression system.

HORIZONTAL GLAZING See Skylight.

HOTEL/MOTEL is a building or buildings that has six or more guest rooms or a lobby serving six or more guest rooms, where the guest rooms are intended or designed to be used, or which are used, rented, or hired out to be occupied, or which are occupied for sleeping purposes by guests, and all conditioned spaces within the same building envelope. Hotel/motel also includes all conditioned spaces which are (1) on the same property as the hotel/motel, (2) served by the same central heating, ventilation, and air-conditioning system as the hotel/motel, and (3) integrally related to the functioning of the hotel/motel as such, including, but not limited to, exhibition facilities, meeting and conference facilities, food service facilities, lobbies, and laundries.

HSPF See Heating Seasonal Performance Factor.

HVAC SYSTEM is a space conditioning system or ventilation system.

HYDRONIC COOLING SYSTEM is any cooling system which uses water or a water solution as a source of cooling or heat rejection, including chilled water systems (both air and water-cooled) as well as water-cooled or evaporatively cooled direct expansion systems, such as water source (water-to-air) heat pumps.

HYDRONIC SPACE HEATING SYSTEM is a system that uses water-heating equipment, such as a storage tank water heater or a boiler, to provide space heating. Hydronic space heating systems include both radiant floor systems and convective or fan coil systems. See Combined Hydronic Space/Water Heating System.

IES HB See IES Lighting Handbook.

IES LIGHTING HANDBOOK is the Illuminating Engineering Society National Association document titled "The IES Lighting Handbook: Reference and Applications, Tenth Edition" (2011).

IES LM-9, is the Illuminating Engineering Society document titled, "Electrical and Photometric Measurements of Fluorescent Lamps." (IES LM-9-2009)

IES LM-20 is the Illuminating Engineering Society document titled "Photometric Testing of Reflector-Type Lamps – Incandescent Lamps." (IES LM-20-13)

IES LM-45, is the Illuminating Engineering Society document titled, "Electrical and Photometric Measurements of General Service Incandescent Filament Lamps." (IES LM-45-09)

IES LM-46, is the Illuminating Engineering Society document titled, "Photometric Testing of Indoor Luminaires Using High Intensity Discharge or Incandescent Filament Lamps." 2004. (IES-LM-46-12)

IES LM-51, is the Illuminating Engineering Society document titled, "Electrical and Photometric Measurements of High Intensity Discharge Lamps." (IES LM-51-13)

IES LM-66, is the Illuminating Engineering Society document titled, "Electrical and Photometric Measurements of Single-Ended Compact Fluorescent Lamps." (IES LM66-11)

IES LM-79-08 is the Illuminating Engineering Society document titled, "IES Approved Method for the Electrical and Photometric Measurements of Solid-State Lighting Products."

IES TM-15-11 is the Illuminating Engineering Society document titled, "Luminaire Classification Systems for Outdoor Luminaires."**IG UNIT,** See Insulating Glass Unit.

INDEPENDENT IDENTITY is having no financial interest in, and not advocating or recommending the use of any product or service as a means of gaining increased business with firms or persons specified in Section 1673(i) of the California Home Energy Rating System Program regulations (California Code of Regulations, Title 20, Division 2, Chapter 4, Article 8). (Financial Interest is an ownership interest, debt agreement, or employer/employee relationship. Financial interest does not include ownership of less than 5 percent of the outstanding equity securities of a publicly traded corporation).

> ***NOTE****:* The definitions of "independent entity" and "financial interest," together with Title 20, Section 1673(i), prohibit conflicts of interest between HERS Providers and HERS Raters, or between Providers/Raters and builders/subcontractors.

INDIRECTLY CONDITIONED SPACE is enclosed space, including, but not limited to, unconditioned volume in atria, that (1) is not directly conditioned space; and (2) either (a) has a thermal transmittance area product (UA) to directly conditioned space exceeding that to the outdoors or to unconditioned space and does not have fixed vents or openings to the outdoors or to unconditioned space, or (b) is a space through which air from directly conditioned spaces is transferred at a rate exceeding three air changes per hour.

INDUSTRIAL EQUIPMENT is manufactured equipment used in industrial processes.

INFILTRATION is uncontrolled inward air leakage from outside a building or unconditioned space, including leakage through cracks and interstices, around windows and doors, and through any other exterior or demising partition or pipe or duct penetration.

INFILTRATION CONTROLS are measures taken to control the infiltration of air. (Mandatory Infiltration control measures include weather-stripping, caulking, and sealing in and around all exterior joints and openings).

INSTALLER means the builder's subcontractor or the person installing the equipment.

INSULATING GLASS UNIT is a self-contained unit, including the glazings (lites or panes of glass), spacer(s), films (if any), gas infills, and edge caulking, installed in fenestration products. It does not include the frame.

INSULATION is a material that limits heat transfer. Insulating material of the types and forms listed in Section 110.8(a) may be installed only if the manufacturer has certified that the insulation complies with the Standards for Insulating Material, Title 24, Part 12, Chapter 12-13 of the California Code of Regulations. (Movable insulation is designed to cover windows and other glazed openings part of the time to reduce heat loss and heat gain.)

INTEGRATED ENERGY EFFICIENCY RATIO (IEER) is a single-number cooling part load efficiency figure of merit calculated per the method described in AHRI Standard 340/360. This metric replaces the IPLV for ducted and non-ducted units.

INTEGRATED PART LOAD VALUE (IPLV) is a single-number figure of merit calculated per the method described in AHRI Standard 550/590 for use with chillers.

INTERIOR PARTITION is an interior wall or floor/ceiling that separates one area of conditioned space from another within the building envelope.

IPLV See Integrated Part Load Value.

ISO 13256-1 is the International Organization for Standardization document titled "Water-source heat pumps -- Testing and rating for performance -- Part 1: Water-to-air and brine-to-air heat pumps," 1998.

ISO 13256-2 is the International Organization for Standardization document titled "Water-source heat pumps Testing and rating for performance -- Part 1: Water-to-water and brine-to-water heat pumps," 1998.

ISO/IEC 17011 is the International Organization for Standardization and the International Electrotechnical Commission document titled “Conformity assessment – General requirements for accreditation bodies accrediting conformity assessment bodies.” (EN ISO/IEC 17011:2004)

ISO/IEC 17020 is the International Organization for Standardization and the International Electrotechnical Commission document titled “General criteria for the operation of various types of bodies performing inspection.” (EN ISO/IEC 17020:2004)

ISO/IEC 17025 is the International Organization for Standardization and the International Electrotechnical Commission document titled “General requirements for the competence of testing and calibration laboratories.” 2005 (ANS/ISO/IEC Standard 17025:2005).

ISOLATION DEVICE is a device that prevents the conditioning of a zone or group of zones in a building while other zones of the building are being conditioned.

KNEE WALL is a sidewall separating conditioned space from attic space under a pitched roof. Knee walls should be insulated as an exterior wall as specified by the chosen method of compliance.

LANGELIER SATURATION INDEX (LSI) is expressed as the difference between the actual system pH and the saturation pH. LSI indicates whether water will precipitate, dissolve, or be in equilibrium with calcium carbonate, and is a function of hardness, alkalinity, conductivity, pH and temperature.

LARGEST NET CAPACITY INCREMENT is the largest increase in capacity when switching between combinations of base compressors that is expected to occur under the compressed air system control scheme.

LEFT SIDE is the left side of the building as one faces the front facade from the outside. This designation is used on the Certificate of Compliance and other compliance documentation.

LIGHTING definitions:

> **Accent Lighting** is directional lighting designed to highlight or spotlight objects. It can be recessed, surface mounted or mounted to a pendant, stem or track.
>
> **Chandelier** is a ceiling-mounted, close-to-ceiling or suspended decorative luminaire that uses glass, crystal, ornamental metals or other decorative material.
>
> **Compact Fluorescent Lamp** is a fluorescent lamp less than 9 inches maximum overall length (M.O.L.) with a T5 or smaller diameter glass tube that is folded, bent or bridged.
>
> **Decorative (Lighting/Luminaire)** is lighting or luminaires installed only for aesthetic purposes and that does not serve as display lighting or general lighting.

Display Lighting is lighting that provides a higher level of illuminance to a specific area than the level of surrounding ambient illuminance. Types of display lighting include:

Floor: supplementary lighting required to highlight features, such as merchandise on a clothing rack, which is not displayed against a wall.

Wall: supplementary lighting required to highlight features, such as merchandise on a shelf, which is displayed on perimeter walls.

Window: lighting of objects such as merchandise, goods, and artifacts, in a show window, to be viewed from the outside of a space through a window.

Case: lighting of small art objects, artifacts or valuable collections which involves customer inspection of very fine detail from outside of a glass enclosed display case.

General Lighting is installed electric lighting that provides a uniform level of illumination throughout an area, exclusive of any provision for special visual tasks or decorative effect, exclusive of daylighting, and also known as ambient lighting.

GU-24 is the designation of a lamp holder and socket configuration, based on a coding system by the International Energy Consortium, where “G” indicates the broad type of two or more projecting contacts, such as pins or posts, “U” distinguishes between lamp and holder designs of similar type but that are not interchangeable due to electrical or mechanical requirements, and “24” indicates 24 millimeters center to center spacing of the electrical contact posts.

Illuminance is the incident luminous flux density on a differential element of surface located at a point and oriented in a particular direction, expressed in lumens per unit area.

Illumination is light incident on a surface of body, or the general condition of being illuminated.

Lamp is an electrical appliance that produces optical radiation for the purpose of visual illumination, designed with a base to provide an electrical connection between the lamp and a luminaire, and designed to be installed into a luminaire by means of a lamp-holder integral to the luminaire.

Landscape Lighting is a type of outdoor lighting that is recessed into or mounted on the ground, paving or raised deck, which is mounted less than 42” above grade or mounted onto trees or trellises, and that is intended to be aimed only at landscape features.

Lantern is an outdoor luminaire that uses an electric lamp to replicate the appearance of a pre-electric lantern, which used a flame to generate light.

Light is the luminous equivalent of power and is properly called luminous flux.

Lighting, or illumination, is the application of light to achieve some practical or aesthetic effect.

Light Emitting Diode (LED) definitions used in Part 6 are in section 6.8 of ANSI/IES RP-16-10.

Low Voltage is less than 90 volts.

Lumen Maintenance is a strategy used to provide a precise, constant level of lighting from a lighting system regardless of the age of the lamps or the maintenance of the luminaires.

Luminaire is a complete lighting unit consisting of lamp(s) and the parts that distribute the light, position and protect the lamp(s), and connect the lamp(s) to the power supply.

Luminance is a measure of the light emitting power of a surface, in a particular direction, per unit apparent area.

Luminous flux is visually evaluated radiant flux and defines “light” for purposes of lighting design and illuminating engineering.

Marquee lighting is a permanent lighting system consisting of one or more rows of many small lamps, including light emitting diodes (LEDs), or fiber optic lighting, attached to a canopy.

Ornamental lighting for compliance with Part 6 is the following:

Luminaires installed outdoor which are rated for 100 watts or less that are post-top luminaires, lanterns, pendant luminaires, chandeliers and marquee lighting.

Decorative Luminaires installed indoor that are chandeliers, sconces, lanterns, neon and cold cathode, light emitting diodes, theatrical projectors, moving lights and light color panels.

Pendant is a mounting method in which the luminaire is suspended from above.

Permanently Installed lighting consists of luminaires that are affixed to land, within the meaning of Civil Code Sections 658 and 660, except as provided below. Permanently installed luminaires may be mounted inside or outside of a building or site. Permanently installed luminaires may have either plug-in or hardwired connections for electric power. Examples include track and flexible lighting systems; lighting attached to walls, ceilings, columns, inside or outside of permanently installed cabinets, internally illuminated cabinets, mounted on poles, in trees, or in the ground; attached to ceiling fans and integral to exhaust fans. Permanently installed lighting does not include portable lighting or lighting that is installed by the manufacturer in exhaust hoods for cooking equipment, refrigerated cases, food preparation equipment, and scientific and industrial equipment.

Portable Lighting is lighting, with plug-in connections for electric power, that is: table and freestanding floor lamps; attached to modular furniture; workstation task luminaires; luminaires attached to workstation panels; attached to movable displays; or attached to other personal property.

Post top luminaire is an outdoor luminaire that is mounted directly on top of a lamp-post.

Precision Lighting is task lighting for commercial or industrial work that illuminates low contrast, finely detailed, or fast moving objects.

Radiant power is the time-rate-flow of radiant energy.

Radiant Energy is the electromagnetic or photonic radiant energy from a source.

Sconce is a wall mounted decorative accent luminaire.

Source (light) is the general term used to reference a source of light. It can refer variously to an electric lamp, a light emitting diode (LED), an entire luminaire with lamp and optical control, or fenestration for daylighting.

Special Effects Lighting is lighting installed to give off luminance instead of providing illuminance, which does not serve as general, task, or display lighting.

Task Lighting is lighting that is not general lighting and that specifically illuminates a location where a task is performed.

Temporary Lighting is a lighting installation, with plug-in connections, that does not persist beyond 60 consecutive days or more than 120 days per year.

Track Lighting is a system that includes luminaires and a track, rails, or cables that both mount the system, and deliver electric power. Track lighting includes the following types:

Line-Voltage Track Lighting is equipped with luminaires that use line-voltage lamps or that are equipped with integral transformers at each luminaire.

Low-Voltage Track Lighting is equipped with remote transformers for use with low-voltage equipment along the entire length of track.

Track-Mounted Luminaires are luminaires designed to be attached at any point along a track lighting system. Track mounted luminaires may be line-voltage or low-voltage.

Tuning is the ability to set maximum light levels at a lower level than full lighting power.

LIQUID LINE is the refrigerant line that leads from the condenser to the evaporator in a split system air conditioner or heat pump. The refrigerant in this line is in a liquid state and is at an elevated temperature. This line should not be insulated.

LISTED is in accordance with Article 100 of the California Electrical Code.

LOW-GWP REFRIGERANT is a compound used as a heat transfer fluid or gas that is: (A) any compound or blend of compounds, with a GWP Value less than 150; and (B) U.S. EPA Significant New Alternatives Policy (SNAP)-approved; and (C) not an ozone depleting substance as defined in Title 40 of the Code of Federal Regulations, Part 82, §82.3 (as amended March 10, 2009).

LOW-RISE ENCLOSED SPACE is an enclosed space located in a building with 3 or fewer stories.

LOW-RISE RESIDENTIAL BUILDING is a building, other than a hotel/motel that is Occupancy Group:

R-2, multi-family, with three stories or less; or

R-3, single family; or

U-building, located on a residential site.

LOW-SLOPED ROOF is a roof that has a ratio of rise to run of 2:12 or less.

LPG is liquefied petroleum gas. Propane is one type of LPG.

MAKEUP AIR is outdoor air deliberately brought into the building from the outside and supplied to the vicinity of an exhaust hood to replace air, vapor, and contaminants being exhausted. Makeup air is generally filtered and fan-forced, and it may be heated or cooled depending on the requirements of the application. Makeup air may be delivered through outlets integral to the exhaust hood or through outlets in the same room. (see Stds.)

MANDATORY MEASURES CHECKLIST is a form used by the building plan checker and field inspector to verify compliance of the building with the prescribed list of mandatory features, equipment efficiencies and product certification requirements. The documentation author indicates compliance by initialing, checking, or marking N/A (for features not applicable) in the boxes or spaces provided for the designer.

MANUAL is capable of being operated by personal intervention.

MANUFACTURED DEVICE is any heating, cooling, ventilation, lighting, water heating, refrigeration, cooking, plumbing fitting, insulation, door, fenestration product, or any other appliance, device, equipment, or system subject to §110.0 through §110.9 of Part 6.

LIGHTING CONTROLS consist of the following:

Astronomical Time-Switch Control is an Automatic Time-Switch Control that controls lighting based on the time of day and astronomical events such as sunset and sunrise, accounting for geographic location and calendar date.

Automatic Daylight Control uses one or more photosensors to detect changes in daylight illumination and then automatically adjusts the luminous flux of the electric lighting system in response.

Automatic Multi-Level Daylight Control adjusts the luminous flux of the electric lighting system in either a series of steps or by continuous dimming in response to available daylight. This kind of control uses one or more photosensors to detect changes in daylight illumination and then automatically adjusts the electric lighting levels in response.

Automatic Time Switch Control controls lighting based on the time of day.

Captive-Key Override is a type of lighting control in which the key that activates the override cannot be released when the lights are in the on position.

Countdown Timer Switch turns lighting or other loads ON when activated using one or more selectable count-down time periods and then automatically turns lighting or other loads OFF when the selected time period had elapsed.

Dimmer varies the luminous flux of the electric lighting system by changing the power delivered to that lighting system.

Dimmer, Full-Range (Also known as a Continuous Dimmer) varies the luminous flux of the electric lighting system over a continuous range from the device's maximum light output to the device's minimum light output without visually apparent abrupt changes in light level between the various steps.

Dimmer, Stepped varies the luminous flux of the electric lighting system in one or more predetermined discrete steps between maximum light output and OFF with changes in light level between adjacent steps being visually apparent.

Lighting Control, Self Contained is a unitary lighting control module that requires no additional components to be a fully functional lighting control.

Lighting Control System requires two or more components to be installed in the building to provide all of the functionality required to make up a fully functional and compliant lighting control.

Multi-Level Astronomical Time Switch is an Astronomical Time Switch Control that reduces lighting power in multiple steps.

Multi-Level Lighting Control reduces power going to a lighting system in multiple steps.

Multiscene Programmable Control allows for two or more pre-defined lighting settings, in addition to all-OFF, for two or more groups of luminaires to suit multiple activities in the space.

Occupant Sensing Controls automatically control levels of illumination, allow for manual operation, and consist of the following types:

Motion Sensor is used outdoors, automatically turns lights OFF after an area is vacated of occupants, and automatically turns the lights ON when the area is occupied.

Occupant Sensor is used indoors and automatically turns lights OFF after an area is vacated of occupants and is capable of automatically turning the lights ON when an area is occupied.

Partial-ON Occupant/Motion Sensor automatically turns lights OFF after an area is vacated of occupants and is capable of automatically or manually turning ON part of the lights when an area is occupied.

Partial-OFF Occupant/Motion Sensor automatically turns OFF part of the lights after an area is vacated of occupants and is capable of automatically turning ON the lights when an area is occupied.

Vacancy Sensor automatically turns lights OFF after an area is vacated of occupants but requires lights to be turned ON manually.

Part-Night Outdoor Lighting Control is a time or occupancy-based lighting control device or system that is programmed to reduce or turn off the lighting power to an outdoor luminaire for a portion of the night.

Photo Control automatically turns lights ON and OFF, or automatically adjusts lighting levels, in response to the amount of daylight that is available. A Photo Control may also be one component of a field assembled lighting system, the component having the capability to provide a signal proportional to the amount of daylight to a Lighting Control System to continuously dim or brighten the electric lights in response.

Track Lighting Integral Current Limiter consists of a current limiter integral to the end-feed housing of a manufactured line-voltage track lighting system.

Track Lighting Supplementary Overcurrent Protection Panel is a Panelboard containing Supplementary Overcurrent Protection Devices as defined in Article 100 of the California Electrical Code, and used only with line voltage track lighting.

MECHANICAL COOLING is lowering the temperature within a space using refrigerant compressors or absorbers, desiccant dehumidifiers, or other systems that require energy from depletable sources to directly condition the space. In nonresidential, high-rise residential, and hotel/motel buildings, cooling of a space by direct or indirect evaporation of water alone is not considered mechanical cooling.

MECHANICAL HEATING is raising the temperature within a space using electric resistance heaters, fossil fuel burners, heat pumps, or other systems that require energy from depletable sources to directly condition the space.

MEDICAL AND CLINICAL CARE See Nonresidential Functional Area or Type of Use.

MERV is the Minimum Efficiency Reporting Value as determined by ASHRAE Standard 52.2 Method of Testing General Ventilation Air-Cleaning Devices for Removal Efficiency by Particle Size.

METAL BUILDING is a complete integrated set of mutually dependent components and assemblies that form a building, which consists of a steel-framed superstructure and metal skin. This does not include structural glass or metal panels such as in a curtain wall system.

MICROCHANNEL CONDENSER is an air-cooled condenser for refrigeration systems which utilizes multiple small parallel gas flow passages in a flat configuration with fin surfaces bonded between the parallel gas passages.

MINISPLIT AIR CONDITIONERS AND HEAT PUMPS are systems that have a single outdoor section and one or more indoor sections. The indoor sections cycle on and off in unison in response to a single indoor thermostat.

MIXED OCCUPANCY BUILDING is a building designed and constructed for more than one type of occupancy, such as a three story building with ground floor retail and second and third floor residential apartments.

MODEL is a single floor plan of a dwelling unit design. To be considered the same model; dwelling units shall be in the same subdivision or multi-family housing development and have the same energy designs and features, including the same floor area and volume. For multi-family buildings, variations in the exterior surface areas caused by the location of dwelling units within the building do not cause dwelling units to be considered different models.

> ***NOTE:*** For purposes of establishing HERS sampling groups, variations in the basic floor plan layout, energy design, compliance features, zone floor area, or zone volume, that do not change the HERS features to be tested, the heating or cooling capacity of the HVAC unit(s), or the number of HVAC units specified for each dwelling unit, shall not cause dwelling units to be considered different models.

MODELING ASSUMPTIONS are the conditions (such as weather conditions, thermostat settings and schedules, internal gain schedules, etc.) that are used for calculating a building's annual energy consumption as specified in the Alternative Calculation Methods (ACM) Approval Manuals.

MOVABLE SHADING DEVICE See Operable Shading Device.

MULLION is a vertical framing member separating adjoining window or door sections. See Dividers.

MULTI-FAMILY DWELLING UNIT is a dwelling unit of occupancy type R, as defined by the CBC, sharing a common wall and/or ceiling/floor with at least one other dwelling unit. **MULTIPLE-SPLIT AIR**

CONDITIONERS AND HEAT PUMPS are systems that have two or more indoor sections. The indoor sections operate independently and can be used to condition multiple zones in response to multiple indoor thermostats.

MULTIPLE ZONE is a supply fan (and optionally a return fan) with heating and/or cooling heat exchangers (e.g. DX coil, chilled water coil, hot water coil, furnace, electric heater) that serves more than one thermostatic zone. Zones are thermostatically controlled by features including but not limited to variable volume, reheat, recool and concurrent operation of another system.

MULTIPLE ZONE SYSTEM is an air distribution system that supplies air to more than one Space Conditioning Zone, each of which has one or more devices (such as dampers, cooling coils, and heating coils) that regulate airflow, cooling, or heating capacity to the zone.

MUNTINS See Dividers.

NET EXHAUST FLOW RATE is the exhaust flow rate for a hood, minus any internal discharge makeup air flow rate.

NEMA SSL 7A is the National Electrical Manufacturers Association document titled “Phase Cut Dimming for Solid State Lighting: Basic Compatibility,” 2013. (NEMA SSL 7A-2013)

NEWLY CONDITIONED SPACE is any space being converted from unconditioned to directly conditioned or indirectly conditioned space. Newly conditioned space must comply with the requirements for an addition. See §1410.0 for nonresidential occupancies and §150.2 for residential occupancies.

NEWLY CONSTRUCTED BUILDING is a building that has never been used or occupied for any purpose.

NFRC is the National Fenestration Rating Council. This is a national organization of fenestration product manufacturers, glazing manufacturers, manufacturers of related materials, utilities, state energy offices, laboratories, home builders, specifiers (architects), and public interest groups.

> ***NOTE*:** This organization is designated by the Commission as the Supervisory Entity, which is responsible for rating the U-factors and solar heat gain coefficients of manufactured fenestration products (i.e., windows, skylights, glazed doors) that must be used in compliance calculations. See also Fenestration Area and Fenestration Product.

NFRC 100 is the National Fenestration Rating Council document titled "NFRC 100: Procedure for Determining Fenestration Product U-factors." (2011) NFRC 100 includes procedures for the Component Modeling Approach (CMA) and site built fenestration formerly included in a separate document, NFRC 100-SB.

NFRC 200 is the National Fenestration Rating Council document titled "NFRC 200: Procedure for Determining Fenestration Product Solar Heat Gain Coefficients and Visible Transmittance at Normal Incidence." (2011).

NFRC 202 is the National Fenestration Rating Council document titled "NFRC 202: Procedures for Determining Translucent Fenestration Product Visible Transmittance at Normal Incidence." (2011).

NFRC 203 is the National Fenestration Rating Council document titled "NFRC 203: Procedure for Determining Visible Transmittance of Tubular Daylighting Devices." (2012).

NFRC 400 is the National Fenestration Rating Council document titled "NFRC 400: Procedure for Determining Fenestration Product Air Leakage." (2010).

NONDEPLETABLE SOURCES is defined as energy that is not obtained from depletable sources. Also referred to as renewable energy, including solar and wind power. See Energy Obtained from Nondepletable Sources.

NONDUCTED SYSTEM Is an air conditioner or heat pump that is designed to be permanently installed equipment and directly heats or cools air within the conditioned space using one or more indoor coils that are mounted on room walls and/or ceilings. The unit may be of a modular design that allows for combining multiple outdoor coils and compressors to create one overall system.

NONRESIDENTIAL BUILDING is any building which is identified in the California Building Code Table; Description of Occupancy as Group A, B, E, F, H, M, or S; and is a U; as defined by Part2 of Title24, CCR.

> ***NOTE*:** Requirements for high-rise residential buildings and hotels/motels are included in the nonresidential sections of Part 6.

NONRESIDENTIAL BUILDING OCCUPANCY TYPES are building types in which a minimum of 90 percent of the building floor area functions as one of the following, which do not qualify as any other Building Occupancy Types more specifically defined in Section 100.1, and which do not have a combined total of more than 10 percent of the area functioning of any Nonresidential Function Areas specifically defined in Section 100.1:

> **Auditorium Building** is a public building in which a minimum of 90 percent of the building floor area are rooms with fixed seating that are primarily used for public meetings or gatherings.
>
> **Classroom Building** is a building for an educational institution in which a minimum of 90 percent of the building floor area are classrooms or educational laboratories.
>
> **Commercial and Industrial Storage Building** is a building for which a minimum or 90% of the building floor area is used for storing items.
>
> **Convention Center Building** is a building in which a minimum of 90 percent of the building floor area are rooms for meetings and conventions, which have neither fixed seating nor fixed staging.

Financial Institution Building is a building in which a minimum of 90 percent of the building floor area are rooms used for an institution which collects funds from the public and places them in financial assets, such as deposits, loans, and bonds.

General Commercial and Industrial Work Building is a building in which a minimum of 90 percent of the building floor area are rooms for performing a craft, assembly or manufacturing operation.

Grocery Store Building is a building in which a minimum of 90 percent of the building floor area is sales floor for the sale of foodstuffs.

Library Building is a building which is in which a minimum of 90 percent of the building floor area are rooms use as a repository of literary materials kept for reading or reference, such as books, periodicals, newspapers, pamphlets and prints..

Medical Buildings and Clinic Buildings are non "I" occupancy buildings in which a minimum of 90 percent of the building floor area are rooms where medical or clinical care is provided, does not provide overnight patient care, and is used to provide physical and mental care through medical, dental, or psychological examination and treatment.

Office Building is a building of CBC Group B Occupancy in which a minimum of 90 percent of the building floor area are rooms in which business, clerical or professional activities are conducted.

Parking Garage Building is a building in which a minimum of 90 percent of the building floor area is for the purpose of parking vehicles, which consists of at least a roof over the parking area enclosed with walls on all sides. The building includes areas for vehicle maneuvering to reach designated parking spaces. If the roof of a parking structure is also used for parking, the section without an overhead roof is considered an outdoor parking lot instead of a parking garage.

Religious Facility Building is a building in which a minimum of 90 percent of the floor area in the building floor area are rooms for assembly of people to worship.

Restaurant Building is a building in which a minimum of 90 percent of the building floor area are rooms in which food and drink are prepared and served to customers in return for money.

School Building is a building in which a minimum of 90 percent of the building floor area is used for an educational institution, but in which less than 90 percent of the building floor area is classrooms or educational laboratories, and may include an auditorium, gymnasium, kitchen, library, multi-purpose room, cafeteria, student union, or workroom. A maintenance or storage building is not a school building.

Theater Building is a building in which a minimum of 90 percent of the building floor area are rooms having tiers of rising seats or steps for the viewing of motion pictures, or dramatic performances, lectures, musical events and similar live performances.

NONRESIDENTIAL COMPLIANCE MANUAL is the manual developed by the Commission, under Section 25402.1 (e) of the Public Resources Code, to aid designers, builders, and contractors in meeting the energy efficiency requirements for nonresidential, high-rise residential, and hotel/motel buildings.

NONRESIDENTIAL FUNCTION AREAS are those areas, rooms, and spaces within Nonresidential Buildings which fall within the following particular definitions, and are defined according to the most specific definition:

Aisle Way is the passage or walkway between storage racks in a Commercial or Industrial Storage Building, where the racks are permanently anchored to the floor and used to store materials such as goods and merchandise, **Atrium** is a large-volume indoor space created by openings between two or more stories but is not used for an enclosed stairway, elevator hoistway, escalator opening, or utility shaft for plumbing, electrical, air-conditioning or other equipment.

Auditorium Room is a room with fixed seats used for public meetings or gatherings.

Auto Repair Bay is a room or area used to repair automotive equipment and/or vehicles.

Beauty Salon is a room or area in which the primary activity is manicures, pedicures, facials, or the cutting or styling of hair.

Civic Meeting Place is a space in a government building designed or used for public debate, discussion, or public meetings of governmental bodies.

Classroom, Lecture, Training, Vocational Room is a room or area where an audience or class receives instruction.

Commercial and Industrial Storage Area is a room or area used for storing of items such as goods and merchandise.

Commercial and Industrial Storage Area (refrigerated) is a room or area used for storing items items such as goods and merchandise where mechanical refrigeration is used to maintain the space temperature at 55° F or less.

Convention, Conference, and Meeting Centers are rooms or areas that are designed or used for meetings, conventions or events, and that have neither fixed seating nor fixed staging.

Corridor is a passageway or route into which compartments or rooms open.

Dining is a room or area where meals that are served to the customers will be consumed.

Electrical/Mechanical/Telephone Room is a room in which the building's electrical switchbox or control panels, telephone switchbox, and/or HVAC controls or equipment is located.

Exercise Center or Gymnasium is a room or area equipped for gymnastics, exercise equipment, or indoor athletic activities.

Exhibit, Museum Area is a room or area in a museum that has for its primary purpose exhibitions, having neither fixed seating nor fixed staging. An exhibit does not include a gallery or other place where art is for sale. An exhibit does not include a lobby, conference room, or other occupancies where the primary function is not exhibitions.

Financial Transaction Area is a room or area used by an institution that collects funds from the public and places them in financial assets, such as deposits, loans and bonds, and includes tellers, work stations, and customers' waiting areas; to complete financial transactions. Financial transaction areas do not include private offices, hallways, restrooms, or other support areas.

General Commercial and Industrial Work Area is a room or area in which an art, craft, assembly or manufacturing operation is performed. Lighting installed in these areas is classified as follows:

High bay: Where the luminaires are 25 feet or more above the floor.

Low bay: Where the luminaires are less than 25 feet above the floor.

Precision: Where visual tasks of small size or fine detail such as electronics assembly, fine woodworking, metal lathe operation, fine hand painting and finishing, egg processing operations, or tasks of similar visual difficulty are performed.

Grocery Sales Area is a room or area that has as its primary purpose the sale of foodstuffs requiring additional preparation prior to consumption.

Hotel Function Area is a hotel room or area such as a hotel ballroom, meeting room, exhibit hall or conference room, together with pre-function areas and other spaces ancillary to its function.

Kitchen/Food Preparation is a room or area with cooking facilities or an area where food is prepared.

Laboratory, Scientific is a room or area where research, experiments, and measurement in medical and physical sciences are performed requiring examination of fine details. The area may include workbenches, countertops, scientific instruments, and associated floor spaces. Scientific laboratory does not refer to film, computer, and other laboratories where scientific experiments are not performed.

Laundry is a room or area primarily designed or used for laundering activities.

Library Area is a room or area primarily designed or used as a repository for literary materials, such as books, periodicals, newspapers, pamphlets and prints, kept for reading or reference.

Reading Area is a room or area in a library containing tables, chairs, or desks for patrons to use for the purpose of reading books and other reference documents. Library reading areas include

reading, circulation, and checkout areas. Reading areas do not include private offices, meeting, photocopy, or other rooms not used specifically for reading by library patrons.

Stack Area is a room or area in a library with grouping of shelving sections. Stack aisles include pedestrian paths located in stack areas.

Lobby:

Hotel is the contiguous area in a hotel/motel between the main entrance and the front desk, including reception, waiting and seating areas.

Main Entryis the contiguous area in buildings other than hotel/motel that is directly located by the main entrance of the building through which persons must pass, including any ancillary reception, waiting and seating areas.

Locker or Dressing Room is a room or area for changing clothing, sometimes equipped with lockers.

Lounge is a room or area in a public place such as a hotel, airport, club, or bar, where you can sit, wait and relax.

Mall is a roofed or covered common pedestrian area within a mall building that serves as access for two or more tenants.

Medical and Clinical Care Area is a non "I" occupancy room or area in a building that does not provide overnight patient care and that is used to provide physical and mental care through medical, dental, or psychological examination and treatment, including, but not limited to, laboratories and treatment spaces.

Museum is a room or area in which the primary function is the care or exhibit of works of artistic, historical, or scientific value. A museum does not include a gallery or other place where art is for sale. A museum does not include a lobby, conference room, or other occupancies where the primary function is not the care or exhibit of works of artistic, historical, or scientific value.

Office Area is a room, area in a building of CBC Group B Occupancy in which business, clerical or professional activities are conducted.

Open Area is a warehouse facility term describing a large unobstructed area that is typically used for the handling and temporary storage of goods.

Parking Garage Areas include the following:

Parking Areas are the areas of a Parking Garage used for the purpose of parking and maneuvering of vehicles on a single floor. Parking areas include sloping floors of a parking garage. Parking areas do not include Daylight Transition Zones, Dedicated Ramps, or the roof of a Parking Garage, which may be present in a Parking Garage.

Daylight Transition Zone in a Parking Garage is the interior path of travel for vehicles to enter a parking garage as needed to transition from exterior daylight levels to interior light levels. Daylight Transition Zones only include the path of vehicular travel and do not include adjacent Parking Areas.

Dedicated Ramps in Parking Garages are driveways specifically for the purpose of moving vehicles between floors of a parking garage and which have no adjacent parking. Dedicated ramps do not include sloping floors of a parking structure, which are considered Parking Areas.

Religious Worship Area is a room or area in which the primary function is for an assembly of people to worship. Religious worship does not include classrooms, offices, or other areas in which the primary function is not for an assembly of people to worship.

Restroom is a room providing personal facilities such as toilets and washbasins.

Retail Merchandise Sales Area is a room or area in which the primary activity is the sale of merchandise.

Server Room is a room smaller than 500 square feet, within a larger building, in which networking equipment and Information Technology (IT) server equipment is housed, and a minimum of five IT severs are installed in frame racks.

Server Aisle is an aisle of racks of Information Technology (IT) server equipment in a Server Room. While networking equipment may also be housed on these racks, it is largely a room to manage server equipment.

Stairs is a series of steps providing passage for persons from one level of a building to another, including escalators.

Stairwell is a vertical shaft in which stairs are located.

Support Area is a room or area used as a passageway, utility room, storage space, or other type of space associated with or secondary to the function of an occupancy that is listed in these regulations.

Tenant Lease Area is a room or area in a building intended for lease for which a specific tenant is not identified at the time of building permit application.

Theater Areas include the following:

Motion Picture Theater is an assembly room or area with tiers of rising seats or steps for the showing of motion pictures.

Performance Theater is an assembly room or area with tiers of rising seats or steps for the viewing of dramatic performances, lectures, musical events and similar live performances.

Transportation Function Area is the ticketing area, waiting area, baggage handling areas, concourse, in an airport terminal, bus or rail terminal or station, subway or transit station, or a marine terminal.

Videoconferencing Studio is a room with permanently installed videoconferencing cameras, audio equipment, and playback equipment for both audio-based and video-based two-way communication between local and remote sites.

Vocational Area is a room or area used to provide training in a special skill to be pursued as a trade.

Waiting Area is an area other than a hotel lobby or main entry lobby normally provided with seating and used for people waiting.

Wholesale Showroom is a room or area where samples of merchandise are displayed.

NONSTANDARD PART LOAD VALUE (NPLV) is a single-number part-load efficiency figure of merit for chillers referenced to conditions other than IPLV conditions. (See “Integrated Part Load Value”).

NORTH-FACING See Orientation.

NSHP GUIDEBOOK is the New Solar Homes Partnership Guidebook, currently adopted by the Energy Commission.

OCCUPIABLE SPACE is any enclosed space inside the pressure boundary and intended for human activities, including, but not limited to, all habitable spaces, toilets, closets, halls, storage and utility areas, and laundry areas.

OPEN COOLING TOWER is an open or direct contact cooling tower which exposes water directly to the cooling atmosphere, thereby transferring the source heat load from the water directly to the air by a combination of heat and mass transfer.

ORIENTATION, CARDINAL is one of the four principal directional indicators, north, east, south, and west, which are marked on a compass. Also called cardinal directions.

ORIENTATION, EAST-FACING is oriented to within 45 degrees of true east, including 45°00'00" south of east (SE), but excluding 45°00'00" north of east (NE).

ORIENTATION, NORTH-FACING is oriented to within 45 degrees of true north, including 45°00'00" east of north (NE), but excluding 45°00'00' west of north (NW).

ORIENTATION, SOUTH-FACING is oriented to within 45 degrees of true south including 45°00'00" west of south (SW), but excluding 45°00'00" east of south (SE).

ORIENTATION, WEST-FACING is oriented to within 45 degrees of true west, including 45°00'00" north of due west (NW), but excluding 45°00'00" south of west (SW).

OUTDOOR AIR (OUTSIDE AIR) is air taken from outdoors and not previously circulated in the building.

OUTDOOR AREAS are areas external to a building. These include but are not limited to the following areas:

Building entrance way is the external area of any operable doorway in or out of a building, including overhead doors. These areas serve any doorway, set of doors (including elevator doors such as in parking garages), turnstile, vestibule, or other form of portal that is ordinarily used to gain access to the building by its users and occupants. Where buildings have separate one-way doors to enter and to leave, this also includes any area serving any doors ordinarily used to leave the building.

Building façade is the exterior surfaces of a building, not including horizontal roofing, signs, and surfaces not visible from any public accessible viewing location.

Canopy is a permanent structure, other than a parking garage area, consisting of a roof and supporting building elements, with the area beneath at least partially open to the elements. A canopy may be freestanding or attached to surrounding structures. A canopy roof may serve as the floor of a structure above.

Carport is a covered, open-sided structure designed or used primarily for the purpose of parking vehicles, having a roof over the parking area. Typically, carports are free-standing or projected from the side of the building and are only two or fewer car lengths deep. A Carport is not a Garage.

Hardscape is the area of an improvement to a site that is paved or has other structural features such as curbs, plazas, entries, parking lots, site roadways, driveways, walkways, sidewalks, bikeways, water features and pools, storage or service yards, loading docks, amphitheaters, outdoor sales lots, and private monuments and statuary.

Outdoor sales frontage is the portion of the perimeter of an outdoor sales area immediately adjacent to a street, road, or public sidewalk.

Outdoor sales lot is an uncovered paved area used exclusively for the display of vehicles, equipment or other merchandise for sale. All internal and adjacent access drives, walkway areas, employee and customer parking areas, vehicle service or storage areas are not outdoor sales lot areas, but are considered hardscape.

Parking lot is an uncovered area for the purpose of parking vehicles. Parking lot is a type of hardscape.

Paved area is an area that is paved with concrete, asphalt, stone, brick, gravel, or other improved wearing surface, including the curb.

Principal viewing location is anywhere along the adjacent highway, street, road or sidewalk running parallel to an outdoor sales frontage.

Public monuments are statuary, buildings, structures, and/or hardscape on public land.

Sales canopy is a canopy specifically to cover and protect an outdoor sales area.

Stairways and Ramps. Stairways are one or more flights of stairs with the necessary landings and platforms connecting them to form a continuous and uninterrupted passage from one level to another. An exterior stairway is open on at least one side, except for required structural columns, beams, handrails and guards. The adjoining open areas shall be either yards, courts or public ways. The other sides of the exterior stairway need not be open. Ramps are walking surfaces with a slope steeper than 5 percent.

Vehicle service station is a gasoline, natural gas, diesel, or other fuel dispensing station.

OUTDOOR LIGHTING ZONE is a geographic area designated by the California Energy Commission in accordance with Part 1, Section 10-114, that determines requirements for outdoor lighting, including lighting power densities and specific control, equipment or performance requirements. Lighting zones are numbered LZ1, LZ2, LZ3 and LZ4.

OUTSIDE AIR See Outdoor Air.

PACKAGED AIR CONDITIONER OR HEAT PUMP is an air conditioner or heat pump that combines both the condenser and air handling capabilities in a single enclosure or package.

PARALLEL FAN-POWERED TERMINAL UNIT is a terminal unit that combines a VAV damper in parallel with a fan that only runs when the terminal unit is providing heating to the space.

PART 6 is Title 24, Part 6 of the California Code of Regulations.

PARTY PARTITION is a wall, floor, or ceiling that separates the conditioned spaces of two different tenants.

PART-LOAD OPERATION occurs when a loaded air compressor is operating below its maximum rated capacity.

PARTICLE SIZE EFFICIENCY is the fraction (percentage) of particles that are captured on air filter equipment as determined during rating tests conducted in accordance with ASHRAE Standard 52.2 or AHRI Standard 680. Particle Size Efficiency is measured in three particle size ranges: 0.3-1.0, 1.0-3.0, 3.0-10 microns.

PERM is equal to 1 grain of water vapor transmitted per 1 square foot per hour per inch of mercury pressure difference.

PLENUM is an air compartment or chamber, including uninhabited crawl space, areas above a ceiling or below a floor, including air spaces below raised floors of computer/data processing centers, or attic spaces, to which one or more ducts are connected and which forms part of either the supply-air, return-air or exhaust air system, other than the occupied space being conditioned.

POOLS, ANSI/NSPI-5 is the American National Standards Institute and National Spa and Pool Institute document titled “American National Standard for Residential Inground Swimming Pools” 2003 (ANSI/NSPI-5 2003).

POOLS, AUXILIARY POOL LOADS are features or devices that circulate pool water in addition to that required for pool filtration, including, but not limited to, solar pool heating systems, filter backwashing, pool cleaners, waterfalls, fountains, and spas.

POOLS, BACKWASH VALVE is a diverter valve designed to backwash filters located between the circulation pump and the filter, including, but not limited to, slide, push-pull, multi-port, and full-flow valves.

POOLS, MULTI-SPEED PUMP is a pump capable of operating at two (2) or more speeds and includes two-speed and variable-speed pumps.

POOLS, NSF/ANSI 50 is the NSF International (formerly National Sanitation Foundation) Standard and American National Standards Institute document titled “Circulation System Components and Related Materials for Swimming Pools, Spas/Hot Tubs” 2005 (NSF/ANSI 50 – 2005).

POOLS, RESIDENTIAL are permanently installed residential in-ground swimming pools intended to use by a single-family home for noncommercial purposes and with dimensions as defined in ANSI/NSPI-5.

PRESSURE BOUNDARY is the primary air enclosure boundary separating indoor and outdoor air. For example, a volume that has more leakage to the outside than to the conditioned space would be considered outside the pressure boundary. Exposed earth in a crawlspace or basement shall not be considered part of the pressure boundary.

PRIMARY AIRFLOW is the airflow (cfm or L/s) supplied to the zone from the air-handling unit at which the outdoor air intake is located. It includes outdoor intake air and recirculated air from that air-handling unit but does not include air transferred or air recirculated to the zone by other means.

PRIMARY STORAGE is compressed air storage located between the compressors and any dryers or other conditioning equipment.

PROCESS is an activity or treatment that is not related to the space conditioning, lighting, service water heating, or ventilating of a building as it relates to human occupancy.

PROCESS BOLER is a type of boiler with a capacity (rated maximum input) of 300,000 Btus per hour (Btu/h) or more that serves a process.

PROCESS, COVERED are processes that are regulated under Part 6, which include datacom equipment, laboratory exhaust, garage exhaust, commercial kitchen ventilation, refrigerator warehouses, supermarket refrigeration systems, compressed air systems, process cooling towers, process boilers.

PROCESS, EXEMPT is process that is not listed as a covered process.

PROCESS LOAD is a load resulting from a process.

PROCESS LOAD, COVERED is a load resulting from a covered process. (see Stds.)

PROCESS LOAD, EXEMPT is a load resulting from an exempt process.

PROCESS SPACE is a space that is thermostatically controlled to maintain a process environment temperature less than 55º F or to maintain a process environment temperature greater than 90º F for the whole space that the system serves, or that is a space with a space-conditioning system designed and controlled to be incapable of operating at temperatures above 55º F or incapable of operating at temperatures below 90º F at design conditions.

PROPOSED DESIGN BUILDING is a proposed building being modeled using rules described in the Alternative Calculation Method Manual. In order for a building to comply with the standards, the proposed building energy use must be less than or equal to the Standard Design Building energy use and meet the mandatory requirements in the Title 24 Building Energy Efficiency Standards.

PROPOSED DESIGN BUILDING ENERGY USE is the predicted energy use of proposed building derived from application of the building energy use modeling rules described in the Alternative Calculation Method (ACM) Approval Manual.

PUBLIC ADVISER is the Public Adviser of the Commission.

PUBLIC AREAS are spaces generally open to the public at large, customers or congregation members, or similar spaces where occupants need to be prevented from controlling lights for safety, security, or business reasons.

R-VALUE is the measure of the thermal resistance of insulation or any material or building component expressed in ft^2-hr-^oF/Btu.

RADIANT BARRIER is a highly reflective, low emitting material installed at the underside surface of the roof deck and the inside surface of gable ends or other exterior vertical surfaces in attics to reduce solar heat gain.

RAISED FLOOR is a floor (partition) over a crawl space, or an unconditioned space, or ambient air.

READILY ACCESSIBLE is capable of being reached quickly for operation, repair or inspection, without requiring climbing or removing obstacles, or resorting to access equipment.

REAR See Back.

RECOOL is the cooling of air that has been previously heated by space-conditioning equipment or systems serving the same building.

RECORD DRAWINGS are drawings that document the as installed location and performance data on all lighting and space conditioning system components, devices, appliances and equipment, including but not limited to wiring sequences, control sequences, duct and pipe distribution system layout and sizes, space conditioning system terminal device layout and air flow rates, hydronic system and flow rates, and connections for the space conditioning system. Record drawings are sometimes called “as built.

RECOVERED ENERGY is energy used in a building that (1) is recovered from space conditioning, service water heating, lighting, or process equipment after the energy has performed its original function; (2) provides space conditioning, service water heating, or lighting; and (3) would otherwise be wasted.

RECOVERY EFFICIENCY is one measure of the efficiency of water heaters. It is required for water heating energy calculations for some types of water heaters. It is a measure of the percentage of heat from

combustion of gas or oil which is transferred to the water. For non-storage type water heaters, the recovery efficiency is really a thermal efficiency.

REFERENCE APPENDICES are the Reference Joint Appendices (JA), the Reference Residential Appendices (RA), and the Reference Nonresidential Appendices (NA).

REFERENCE COMPUTER PROGRAM is the reference method against which other methods are compared. For the Nonresidential Standards, the reference computer program is DOE 2.1E. For the low-rise Residential Standards the reference computer program is CALRES.

REFERENCE JOINT APPENDICES Are the Reference Joint Appendices published by the Commission.

REFERENCE NONRESIDENTIAL APPENDICES Are the Nonresidential Appendices published by the Commission.

REFERENCE RESIDENTIAL APPENDICES Are the Residential Appendices published by the Commission.

REFLECTANCE, SOLAR is the ratio of the reflected solar flux to the incident solar flux.

REFRIGERANT CHARGE is to the amount of refrigerant that is installed or "charged" into an air conditioner or heat pump. The refrigerant is the working fluid. It is compressed and becomes a liquid as it enters the condenser. The hot liquid is cooled in the condenser and flows to the evaporator where it released through the expansion valve. When the pressure is released, the refrigerant expands into a gas and cools. Air is passed over the evaporator to provide the space cooling. When an air conditioner or heat pump has too much refrigerant (overcharged) the compressor may be damaged. When an air conditioner has too little refrigerant (undercharged), the efficiency of the unit is reduced. A thermostatic expansion valve (TXV) can mitigate the impact of improper refrigerant charge.

REFRIGERATED CASE is a manufactured commercial refrigerator or freezer, including but not limited to display cases, reach-in cabinets, meat cases, and frozen food and soda fountain units.

REFRIGERATED SPACE is a space constructed for storage or handling of products, where mechanical refrigeration is used to maintain the space temperature at 55° F or less.

REFRIGERATED WAREHOUSE is a building or a space greater than or equal to 3,000 square feet constructed for storage or handling of products, where mechanical refrigeration is used to maintain the space temperature at 55°F or less.

REGISTERED DOCUMENT means the document has been submitted to a residential or nonresidential data registry for retention, and the data registry has assigned a unique registration number to the document.

REGISTRATION PROVIDER is an organization that administers a data registry service that conforms to the requirements of Reference Joint Appendix JA-7.

REHEAT is the heating of air that has been previously cooled by cooling equipment or supplied by an economizer.

RELOCATABLE PUBLIC SCHOOL BUILDING is a relocatable building as defined by Title 24, Part 1, Section 4-314, which is subject to Title 24, Part 1, Chapter 4, Group 1.

REPAIR is the reconstruction or renewal for the purpose of maintenance of any component, system or equipment of an existing building. Repairs shall not increase the preexisting energy consumption of the repaired component, system, or equipment. Replacement of any component, system or equipment for which there are requirements in the standards is considered an alteration and not a repair.

REPLACEMENT AIR is outdoor air that is used to replace air removed from a building through an exhaust system. Replacement air may be derived from one or more of the following: makeup air, supply air, transfer air and infiltration. However, the ultimate source of all replacement air is outdoor air. When replacement air exceeds exhaust, the result is exfiltration.

> **Supply Air** is air entering a space from an air-conditioning, heating or ventilating system for the purpose of comfort conditioning. Supply air is generally filtered, fan-forced, and heated, cooled, humidified or dehumidified as necessary to maintain specified temperature and humidity conditions.

Transfer Air is air transferred, whether actively by fans or passively by pressure differentials, from one room to another within a building through openings in the room envelope.

Infiltration Air is outdoor air that enters a building or space through openings in the building or space envelope due to negative pressure in the space or building relative to the exterior of the building envelope.

RESIDENTIAL COMPLIANCE MANUAL is the manual developed by the Commission, under Section 25402.1 of the Public Resources Code, to aid designers, builders, and contractors in meeting energy efficiency standards for low-rise residential buildings.

RESIDENTIAL SPACE TYPE is one of the following:

Bathroom is a room or area containing a sink used for personal hygiene, toilet, shower, or a tub.

Closet is a non-habitable room used for the storage of linens, household supplies, clothing, non-perishable food, or similar uses, and which is not a hallway or passageway.

Garage is a non-habitable building or portion of building, attached to or detached from a residential dwelling unit, in which motor vehicles are parked.

Kitchen is a room or area used for cooking, food storage and preparation and washing dishes, including associated counter tops and cabinets, refrigerator, stove, ovens, and floor area.

Laundry is a non-habitable room or space which contains plumbing and electrical connections for a washing machine or clothes dryer.

Storage Building is a non-habitable detached building used for the storage of tools, garden equipment, or miscellaneous items.

Utility Room is a non-habitable room or building which contains only HVAC, plumbing, or electrical controls or equipment; and which is not a bathroom, closet, garage, or laundry room.**RIGHT SIDE** is the right side of the building as one faces the front facade from the outside (see Front). This designation is used to indicate the orientation of fenestration and other surfaces, especially in model homes that are constructed in multiple orientations.**ROOF** is the outside cover of a building or structure including the structural supports, decking, and top layer that is exposed to the outside with a slope less than 60 degrees from the horizontal.**ROOF, LOW-SLOPED** is a roof that has a ratio of rise to run of 2:12 or less (9.5 degrees from the horizontal).**ROOF, STEEP-SLOPED** is a roof that has a ratio of rise to run of greater than 2:12 (9.5 degrees from the horizontal).**ROOF RECOVER BOARD** is a rigid type board, installed directly below a lowsloped roof membrane, with or without above deck thermal insulation, to: (a) improve a roof system's compressive strength, (b) physically separate the roof membrane from the thermal insulation, (c) physically separate a new roof covering from an underlying roof membrane as part of a roof overlay project.**ROOFING PRODUCT** is the top layer(s) of the roof that is exposed to the outside, which has properties including but not limited to solar reflectance, thermal emittance, and mass.

RUNOUT is piping that is no more than 12 feet long and that connects to a fixture or an individual terminal unit.

R-VALUE is the measure of the thermal resistance of insulation or any material or building component expressed in (ft^2-hr °F)/Btu.

SATURATED CONDENSING TEMPERATURE (CONDENSING TEMPERATURE) is: (a) for single component and azeotropic refrigerants, the saturation temperature corresponding to the refrigerant pressure at the condenser entrance, or (b) for zeotropic refrigerants, the arithmetic average of the Dew Point and Bubble Point temperatures corresponding to the refrigerant pressure at the condenser entrance.

SC See Shading Coefficient.

SCIENTIFIC EQUIPMENT is measurement, testing or metering equipment used for scientific research or investigation, including but not limited to manufactured cabinets, carts and racks.

SEASONAL ENERGY EFFICIENCY RATIO (SEER) is the total cooling output of an air conditioner in Btu during its normal usage period for cooling divided by the total electrical energy input in watt-hours during the same period, as determined using the applicable test method in the Appliance Efficiency Regulations.

SERVICE WATER HEATING is heating of water for sanitary purposes for human occupancy, other than for comfort heating.

SHADING is the protection from heat gains because of direct solar radiation by permanently attached exterior devices or building elements, interior shading devices, glazing material, or adherent materials.

SHADING COEFFICIENT (SC) is the ratio of the solar heat gain through a fenestration product to the solar heat gain through an unshaded 1/8-inch-thick clear double strength glass under the same set of conditions. For nonresidential, high-rise residential, and hotel/motel buildings, this shall exclude the effects of mullions, frames, sashes, and interior and exterior shading devices.

SHOWER HEAD is a fixture for directing the spray of water in a shower. A shower head may incorporate one or more sprays, nozzles or openings. All components that are supplied standard together and function from one inlet (i.e., after the mixing valve) form a single shower head.

SIGN definitions include the following:

> **Electronic Message Center (EMC)** is a pixilated image producing electronically controlled sign formed by any light source. Bare lamps used to create linear lighting animation sequences through the use of chaser circuits, also known as “chaser lights” are not consider an EMC.
>
> **Illuminated face** is a side of a sign that has the message on it. For an exit sign it is the side that has the word “EXIT” on it.
>
> **Sign, cabinet** is an internally illuminated sign consisting of frame and face, with a continuous translucent message panel, also referred to as a panel sign.
>
> **Sign, channel letter** is an internally illuminated sign with multiple components, each built in the shape of an individual three dimensional letters or symbol that are each independently illuminated, with a separate translucent panel over the light source for each element.
>
> **Sign, double-faced** is a sign with two parallel opposing faces.
>
> **Sign, externally illuminated** is any sign or a billboard that is lit by a light source that is external to the sign directed towards and shining on the face of the sign.
>
> **Sign, internally illuminated** is a sign that is illuminated by a light source that is contained inside the sign where the message area is luminous, including cabinet signs and channel letter signs.
>
> **Sign, traffic** is a sign for traffic direction, warning, and roadway identification.
>
> **Sign, unfiltered** is a sign where the viewer perceives the light source directly as the message, without any colored filter between the viewer and the light source, including neon, cold cathode, and LED signs.

SINGLE FAMILY RESIDENCE is a building that is of Occupancy Group R-3.

SINGLE PACKAGE VERTICAL AIR CONDITIONER (SPVAC) is a type of air-cooled small or large commercial package air-conditioning and heating equipment; factory assembled as a single package having its major components arranged vertically, which is an encased combination of cooling and optional heating components; is intended for exterior mounting on, adjacent interior to, or through an outside wall; and is powered by single or three-phase current. It may contain separate indoor grille(s), outdoor louvers, various ventilation options, indoor free air discharge, ductwork, wall plenum, or sleeve. Heating components may include electrical resistance, steam, hot water, gas, or no heat but may not include reverse cycle refrigeration as a heating means.

SINGLE PACKAGE VERTICAL HEAT PUMP (SPVHP) is an SPVAC that utilizes reverse cycle refrigeration as its primary heat source, with secondary supplemental heating by means of electrical resistance, steam, hot water, or gas.

SINGLE ZONE is an HVAC system with a supply fan (and optionally a return fan) and heating and/or cooling heat exchangers (e.g. DX coil, chilled water coil, hot water coil, furnace, electric heater) that serves a single thermostatic zone. This system may or may not be constant volume.

SITE SOLAR ENERGY is thermal, chemical, or electrical energy derived from direct conversion of incident solar radiation at the building site.

SLAB-ON-GRADE is an exterior concrete floor in direct contact with the earth below the building.

SMACNA is the Sheet Metal and Air-conditioning Contractors National Association.

SMACNA HVAC DUCT CONSTRUCTION STANDARDS is the Sheet Metal Contractors' National Association document "HVAC Duct Construction Standards Metal and Flexible - 3rd Edition," 2006 (2006ANSI/SMACNA-006-2006 HVAC Duct Construction Standards Metal and Flexible 3rd Edition).

SMACNA RESIDENTIAL COMFORT SYSTEM INSTALLATION STANDARDS MANUAL is the Sheet Metal Contractors' National Association document titled "Residential Comfort System Installation Standards Manual, Seventh Edition." (1998).

SOLAR REFLECTANCE See Reflectance.

SOLAR REFLECTANCE INDEX (SRI) is a measure of the roof's ability to reject solar heat which includes both reflectance and emittance.

SOLAR SAVINGS FRACTION (SSF) is the fraction of domestic hot water demand provided by a solar water-heating system.

SOLAR ZONE is a section of the roof designated and reserved for the future installation of a solar electric or solar thermal system.

SOUTH-FACING See Orientation.

SPA is a vessel that contains heated water in which humans can immerse themselves, is not a pool, and is not a bathtub.

SPACE-CONDITIONING SYSTEM is a system that provides heating, ventilating or cooling within or associated with conditioned spaces in a building, and may incorporate use of components such as chillers/compressors, distribution systems (air ducts, water piping, refrigerant piping), pumps, air handlers, cooling and heating coils, air or water cooled condensers, economizers, terminal units, and associated controls.

SPACER, ALUMINUM is a metal channel that is used either against the glass (sealed along the outside edge of the insulated glass unit), or separated from the glass by one or more beads of caulk, which is used to separate panes of glass in an insulated glass unit.

SPACER, INSULATING is a non-metallic, relatively non-conductive material, usually of rubber compounds, that is used to separate panes of glass in an insulated glass unit.

SPACER, OTHER is a wood, fiberglass, or composite material that is used as a spacer between panes of glass in insulated glass units.

SPACER, SQUIGGLE is a flexible material, usually butyl, formed around a thin corrugated aluminum strip that is used as a spacer in insulated glass units.

SPECIFIC HEAT is the quantity of heat that must be added to a unit mass of a material to increase its temperature by one degree. Typical units are Btu/°F-lb.

SPLIT SYSTEM AIR CONDITIONER OR HEAT PUMP is an air conditioner or heat pump that has physically separate condenser and air handling units that work together as a single cooling system.

STANDARD DESIGN BUILDING is a building that complies with the mandatory and prescriptive requirements in the Title 24 Building Energy Efficiency Standards by using the building energy modeling rules described in the Alternative Calculation Method (ACM) Approval Manual.

STANDARDS See Building Energy Efficiency Standards.

STANDBY LOSS, BTU/HR is the heat lost per hour from the stored water above room temperature. It is one of the measures of efficiency of water heaters required for water heating energy calculations for some types of water heaters. This standby loss is expressed as Btu/hr.

STANDBY LOSS, PERCENT is the ratio of heat lost per hour to the heat content of the stored water above room temperature. It is one of the measures of efficiency of water heaters required for water heating energy calculations for some types of water heaters. Standby loss is expressed as a percentage.

STORAGE, COLD is a storage area within a refrigerated warehouse where space temperatures are maintained at or above 32° F.

STORAGE, COOL is a storage area within a refrigerated warehouse where space temperatures are maintained between 32° F and 55° F.

STORAGE, FROZEN is a storage area within a refrigerated warehouse where the space temperatures are maintained below 32° F.

SUBORDINATE OCCUPANCY is any occupancy type, in mixed occupancy buildings, that is not the dominant occupancy. See Dominant Occupancy, Mixed Occupancy.

SUCTION LINE is the refrigerant line that leads from the evaporator to the condenser in a split system air conditioner or heat pump. This line is insulated since it carries refrigerant at a low temperature.

SUSPENDED FILMS are low-e coated plastic films stretched between the elements of the spacers between panes of glazing; acts as a reflector to slow the loss of heat from the interior to the exterior.

SYSTEM is a combination of equipment, controls, accessories, interconnecting means, or terminal elements by which energy is transformed to perform a specific function, such as space conditioning, service water heating, or lighting.

TDV ENERGY See Time Dependent Valuation (TDV) Energy.

THERMAL BREAK WINDOW FRAME is metal fenestration frames that are not solid metal from the inside to the outside, but are separated in the middle by a material, usually urethane, with a lower conductivity.

THERMAL CONDUCTIVITY is the quantity of heat that will flow through a unit area of the material per hour when the temperature difference through the material is one degree.

THERMAL EMITTANCE See Emittance, Thermal.

THERMAL MASS is solid or liquid material used to store heat for later heating use or for reducing cooling requirements.

THERMAL RESISTANCE (R) is the resistance over time of a material or building component to the passage of heat in (hr. x ft.^{2} x °F)/Btu.

THERMOSTATIC EXPANSION VALVE (TXV) is a refrigerant metering valve, installed in an air conditioner or heat pump, which controls the flow of liquid refrigerant entering the evaporator in response to the superheat of the gas leaving it.

TIME DEPENDENT VALUATION (TDV) ENERGY is the time varying energy caused to be used by the building to provide space conditioning and water heating and for specified buildings lighting. TDV energy accounts for the energy used at the building site and consumed in producing and in delivering energy to a site, including, but not limited to, power generation, transmission and distribution losses.

TITLE 24 is all of the building standards and associated administrative regulations published in Title 24 of the California Code of Regulations. The Building Energy Efficiency Standards are contained in Part 6. Part 1 contains the administrative regulations for the building standards.

TOTAL HEAT OF REJECTION (THR) is the heat absorbed at the evaporator plus the heat picked up in the suction line plus the heat added to the refrigerant in the compressor.

TOWNHOUSE is a single-family dwelling unit constructed in a group of three or more attached units in which each unit extends from the foundation to roof and with open space on at least two sides.

TRANSFER AIR is air transferred, whether actively by fans or passively by pressure differentials, from one room to another within a building through openings in the room envelope.

TRIM COMPRESSOR is a compressor that is designated for part-load operation, handling the short term variable trim load of end uses, in addition to the fully loaded base compressors.

U-FACTOR, CENTER OF GLAZING (Uc) is the U-factor for the center of glazing area

U-FACTOR, is the overall coefficient of thermal transmittance of a fenestration, wall, floor, roof or ceiling component, in Btu/(hr. x ft.^{2} x °F), including air film resistance at both surfaces.

U-FACTOR, TOTAL FENESTRATION PRODUCT (Ut) is the U-factor for the total fenestration product.

UIMC See Unit Interior Mass Capacity.

UL is the Underwriters Laboratories.

UL 1574 is the Underwriters Laboratories document titled "Track Lighting Systems.," 2000.

UL 1598 is the Underwriters Laboratories document titled "Standard for Luminaires," 2000.

UL 181 is the Underwriters Laboratories document titled "Standard for Factory-Made Air Ducts and Air Connectors," 1996.

UL 181A is the Underwriters Laboratories document titled "Standard for Closure Systems for Use With Rigid Air Ducts and Air Connectors," 1994.

UL 181B is the Underwriters Laboratories document titled "Standard for Closure Systems for Use With Flexible Air Ducts and Air Connectors," 1995.

UL 723 is the Underwriters Laboratories document titled "Standard for Test for Surface Burning Characteristics of Building Materials," 1996.

UL 727 is the Underwriters Laboratories document titled "Standard for Oil-Fired Central Furnaces," 2006.

UL 731 is the Underwriters Laboratories document titled "Standard for Oil-Fired Unit Heaters," 2006 with revisions 1 through 7.

UL 2108 is the Underwriters Laboratories document titled "Low Voltage Lighting Systems," 2008.

UL DATA ACCEPTANCE PROGRAM (DAP) is an Underwriters Laboratory program that utilizes work conducted by a client as well as third-party test facilities in accordance with national and international accreditation criteria to facilitate the conduct of investigations of products. Among the types UL uses are Witnessed Test Data Program (WTDP) where UL witnesses the tests being conducted, Client Test Data Program (CTDP) which is where the client conducts the test and submits the data for UL review, and Third Party Test Data Program (TPTDP) where testing is conducted by another testing organization for clients and submitted to UL for review.

UL® is the Underwriters Laboratories.

UNCONDITIONED SPACE is enclosed space within a building that is not directly conditioned, or indirectly conditioned.

UNIT INTERIOR MASS CAPACITY (UIMC) is the amount of effective heat capacity per unit of thermal mass, taking into account the type of mass material, thickness, specific heat, density and surface area.

U-VALUE See U-factor.

VAPOR RETARDER CLASS is a measure of the ability of a material or assembly to limit the amount of moisture that passes through the material or assembly. Vapor retarder class shall be defined using the desiccant method with Procedure A of ASTM E96 as follows:

Class I: 0.1 perm or less

Class II: 0.1 < perm < 1.0 perm

Class III: 1.0 < perm < 10 perm (see Stds.)

VARIABLE AIR VOLUME (VAV) SYSTEM is a space-conditioning system that maintains comfort levels by varying the volume of supply air to the zones served.

VENDING MACHINE is a machine for vending and dispensing refrigerated or non-refrigerated food and beverages or general merchandise.

VENTILATION AIR is that portion of supply air which comes from outside plus any recirculated air that has been treated to maintain the desired quality of air within a designated space. See also Outside Air.

~~**VERTICAL GLAZING** See Window.~~

VINYL WINDOW FRAME is a fenestration frame constructed with a polyvinyl chloride (PVC) which has a lower conductivity than metal and a similar conductivity to wood.

WALL TYPE is a type of wall assembly having a specific heat capacity, framing type, and U-factor.

WATER BALANCE IN EVAPORATIVE COOLING TOWERS The water balance of a cooling tower is:

$$M = E + B \text{ , where:}$$

M = makeup water (from the mains water supply)

E = losses due to evaporation

B = losses due to blowdown

WEATHERSTRIPPING is a specially designed strip, seal or gasket attached to doors and windows to prevent infiltration and exfiltration through cracks around the openings. Weatherstripping is one of the mandatory requirements for all new residential construction. See Infiltration, Exfiltration.

WEIGHTED AVERAGING is an arithmetic technique for determining an average of differing values for the members of a set by weighting each value by the extent to which the value occurs. In some cases when two or more types of a building feature, material or construction assembly occur in a building, a weighted average of the different types may be sufficiently accurate to represent the energy impact of each type considered separately.

WEST-FACING See Orientation.

WINDOW TYPE is a window assembly having a specific solar heat gain coefficient, relative solar heat gain, and U-factor.

WOOD HEATER is an enclosed wood-burning appliance used for space heating and/or domestic water heating.

WOOD STOVE See Wood Heater.

ZONAL CONTROL is the practice of dividing a residence into separately controlled HVAC zones. This may be done by installing multiple HVAC systems that condition a specific part of the building, or by installing one HVAC system with a specially designed distribution system that permits zonal control. The Energy Commission has approved an alternative calculation method for analyzing the energy impact of zonally controlled space heating and cooling systems. To qualify for compliance credit for zonal control, specific eligibility criteria specified in the Residential ACM Manual must be met.

ZONE, CRITICAL is a zone serving a process where reset of the zone temperature setpoint during a demand shed event might disrupt the process, including but not limited to data centers, telecom and private branch exchange (PBX) rooms, and laboratories.

ZONE, NON-CRITICAL is a zone that is not a critical zone.

ZONE, SPACE-CONDITIONING is a space or group of spaces within a building with sufficiently similar comfort conditioning requirements so that comfort conditions, as specified in §140.4(b)3 or §150.0(h), as applicable, can be maintained throughout the zone by a single controlling device.

Joint Appendix JA2

Appendix JA2 – Reference Weather/Climate Data

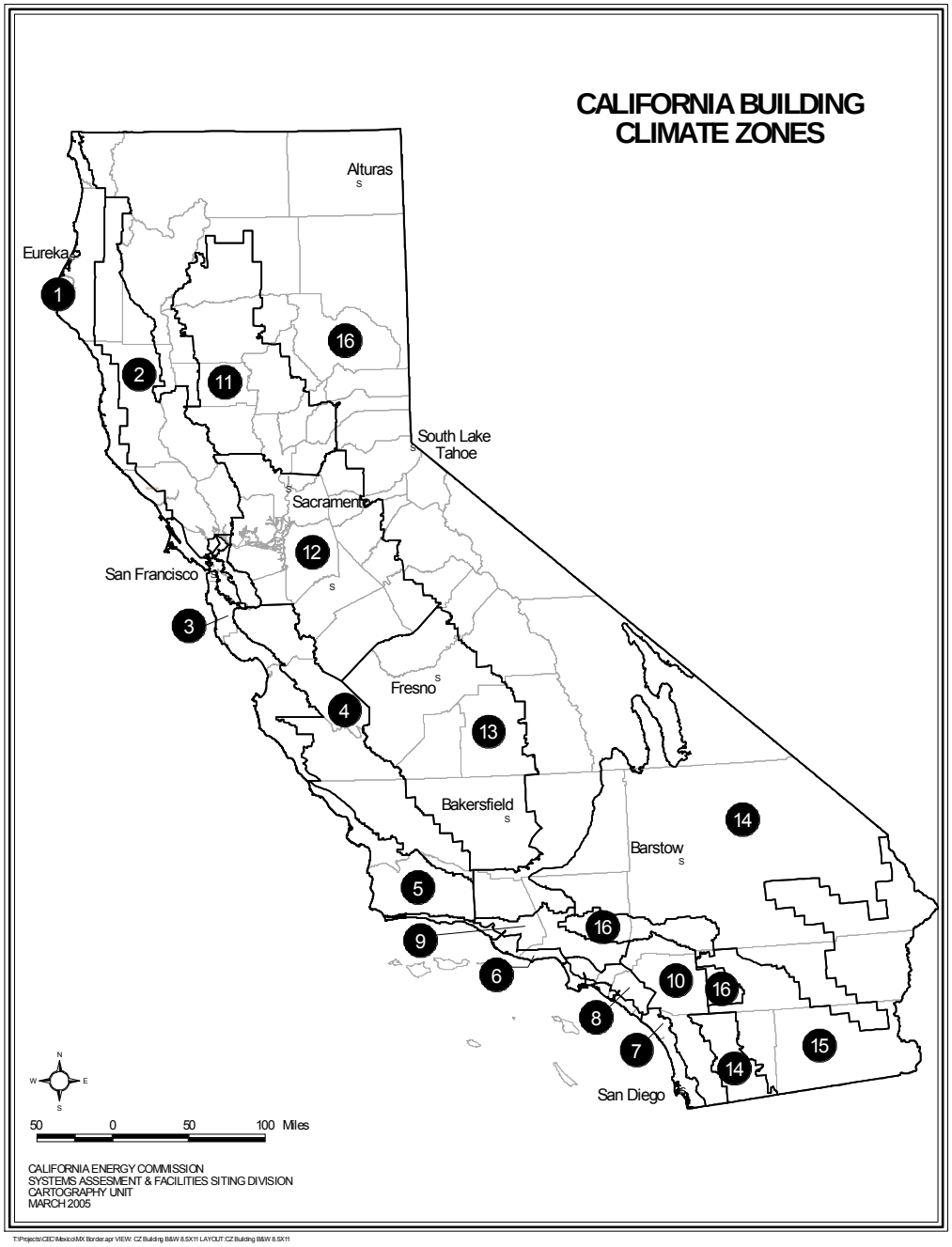

Figure2-1 – Climate Zone Map

JA2.1 Weather Data - General

All energy calculations used for compliance with the Standards must use the Commission's sixteen (16) official hourly weather files or modifications of these files adapted for the design day conditions in Table 2-3. The modified weather files make the HVAC sizing and energy calculations more realistic for energy compliance simulations. These files are available in electronic form from the Commission in CSV (Comma Delimited File) format, TMY2 (Typical Meteorological Year) format and EPW (EnergyPlus) format.

Each weather file contains data on a variety of ambient conditions such as:

(a) Dry bulb temperature

(b) Wet bulb temperature

(c) Wind speed and direction

(d) Direct solar radiation

(e) Diffuse radiation

Table 2-1 –California Standard Climate Zone Summary

Note: The alternative weather files modified for local design conditions use the specific latitude, longitude and elevation of the selected city.

Climate Zone	City	Latitude	Longitude	Elevation (ft)
1	Arcata	41.0	124.1	203
2	Santa Rosa	38.5	122.8	125
3	Oakland	37.7	122.2	6
4	San Jose-Reid	37.3	121.8	135
5	Santa Maria	34.9	120.4	253
6	Torrance	33.8	118.3	88
7	San Diego-Lindbergh	32.7	117.2	13
8	Fullerton	33.9	118.0	95
9	Burbank-Glendale	34.2	118.3	741
10	Riverside	33.9	117.4	840
11	Red Bluff	40.1	122.2	348
12	Sacramento	38.5	121.5	16
13	Fresno	36.8	119.7	335
14	Palmdale	34.6	118.0	2523
15	Palm Springs-Intl	33.8	116.5	475
16	Blue Canyon	39.2	120.7	5279

JA2.1.1 Counties and Cities with Climate Zone Designations

The following pages are a listing of California cities, ZIP codes, and counties with a climate zone designation for each. This information represents an abridged version of the Commission publication *California Climate Zone Descriptions* which contains detailed survey definitions of the 16 climate zones.

New ZIP codes listing approved by the Executive Director will be published as an addendum to this appendix for compliance. Addenda may consist of additional rows or columns to existing tables.

Table 2-2 – Counties and Cities with Climate Zone Designations

CITY	ZIP CODE	COUNTY	CZ
A			
Acampo	95220	San Joaquin	12
Acton	93510	Los Angeles	14
Adelanto	92301	San Bernardino	14
Adin	96006	Modoc	16
Agoura	91301	Los Angeles	9
Agoura	91301	Ventura	9
Aguanga	92536	Riverside	15
Ahwahnee	93601	Madera	13
Ahwahnee	93601	Mariposa	13
Alameda	94501	Alameda	3
Alameda	94502	Alameda	3
Alamo	94507	Contra Costa	12
Albany	94706	Alameda	3
Alderpoint	95511	Humboldt	2
Alhambra	91801	Los Angeles	9
Alhambra	91803	Los Angeles	9
Aliso Viejo	92656	Orange	6
Alleghany	95910	Sierra	16
Alpine	91901	San Diego	10
Alta	95701	Placer	16
Altadena	91001	Los Angeles	16
Alturus	96101	Modoc	16
Amboy	92304	San Bernardino	15
American Canyon	94503	Napa	2
American Canyon	94503	Solano	2
Anaheim	92801	Orange	8
Anaheim	92802	Orange	8
Anaheim	92804	Orange	8
Anaheim	92805	Orange	8
Anaheim	92806	Orange	8
Anaheim	92808	Orange	8
CITY	**ZIP CODE**	**COUNTY**	**CZ**
Anderson	96007	Tehama	11
Angels Camp	95222	Calaveras	12
Angels Camp	95222	Tuolumne	12
Angelus Oaks	92305	San Bernardino	15
Angwin	94508	Napa	2
Annapolis	95412	Sonoma	1
Antioch	94509	Contra Costa	12
Antioch	94531	Contra Costa	12
Anza	92539	Riverside	16
Apple Valley	92307	San Bernardino	14
Apple Valley	92308	San Bernardino	14
Applegate	95703	Placer	11
Aptos	95003	Santa Cruz	3
Arcadia	91006	Los Angeles	9
Arcadia	91007	Los Angeles	9
Arcata	95521	Humboldt	1
Aretsia	90701	Los Angeles	8
Armona	93202	Kings	13
Arnold	95223	Alpine	16
Arnold	95223	Calaveras	16
Aromas	95004	Monterey	4
Aromas	95004	San Benito	4
Arroyo Grande	93420	San Luis Obispo	5
Arvin	93203	Kern	13
Atascadero	93422	San Luis Obispo	4
Atherton	94027	San Mateo	3
Atwater	95301	Merced	12
Auberry	93602	Fresno	16
Auberry	93602	Madera	16

Auburn	95602	Nevada	11
Auburn	95602	Placer	11
Auburn	95603	Placer	11
Avenal	93204	Kings	13
Azusa	91702	Los Angeles	9

B

Bakersfield	93301	Kern	13
Bakersfield	93304	Kern	13
Bakersfield	93305	Kern	13
Bakersfield	93306	Kern	13
Bakersfield	93307	Kern	13
Bakersfield	93308	Kern	13
Bakersfield	93309	Kern	13
Bakersfield	93311	Kern	13
Bakersfield	93312	Kern	13
Bakersfield	93313	Kern	13
Bakersfield	93314	Kern	13
Balboa	92662	Orange	6
Baldwin Park	91706	Los Angeles	9
Ballico	95303	Merced	12
Bangor	95914	Butte	11
Bangor	95914	Yuba	11
Banning	92220	Riverside	15
Barstow	92311	San Bernardino	14
Bass Lake	93604	Madera	16
Bayside	95524	Humboldt	1

CITY	ZIP CODE	COUNTY	CZ
Beale AFB	95903	Yuba	11
Beaumont	92223	Riverside	10
Belden	95915	Plumas	16
Bell	90201	Los Angeles	8
Bella Vista	96008	Shasta	11
Bellflower	90706	Los Angeles	8
Belmont	94002	San Mateo	3
Belvedere Tiburon	94920	Marin	3
Ben Lomond	95005	Santa Cruz	3
Benicia	94510	Solano	12
Berkeley	94702	Alameda	3
Berkeley	94703	Alameda	3
Berkeley	94704	Alameda	3
Berkeley	94705	Alameda	3
Berkeley	94707	Alameda	3
Berkeley	94707	Contra Costa	3
Berkeley	94708	Alameda	3
Berkeley	94708	Contra Costa	3
Berkeley	94709	Alameda	3
Berkeley	94710	Alameda	3
Berkeley	94720	Alameda	3
Berry Creek	95916	Butte	16
Beverly Hills	90210	Los Angeles	9
Beverly Hills	90211	Los Angeles	9
Beverly Hills	90212	Los Angeles	9
Big Bar	96010	Trinity	16
Big Bear City	92314	San Bernardino	16
Big Bear Lake	92315	San Bernardino	16
Big Pine	93513	Inyo	16
Big River	92242	San Bernardino	15
Big Sur	93920	Monterey	3
Biggs	95917	Butte	11
Birds Landing	94512	Solano	12
Bishop	93512	Mono	16
Bishop	93514	Inyo	16
Bishop	93514	Mono	16
Blairsden	96103	Plumas	16
Blocksburg	95514	Humboldt	2
Bloomington	92316	San Bernardino	10
Blue Jay	92317	San Bernardino	16
Blue Lake	95525	Humboldt	1
Blythe	92225	Riverside	15
Bodega	94922	Sonoma	1
Bodega Bay	94923	Sonoma	1
Bodfish	93205	Kern	16
Bolinas	94924	Marin	3
Bonita	91902	San Diego	7
Bonsall	92003	San Diego	10

Boonville	95415	Mendocino	2
Boron	93516	Kern	14
Borrego Springs	92004	San Diego	15
Boulder Creek	95006	San Mateo	3

CITY	ZIP CODE	COUNTY	CZ
Boulder Creek	95006	Santa Cruz	3
Boulevard	91905	San Diego	14
Bradley	93426	Monterey	4
Bradley	93426	San Luis Obispo	4
Branscomb	95417	Mendocino	1
Brawley	92227	Imperial	15
Brea	92821	Orange	8
Brea	92823	Orange	8
Brentwood	94513	Contra Costa	12
Bridgeport	93517	Mono	16
Bridgeville	95526	Humboldt	2
Bridgeville	95526	Trinity	2
Brisbane	94005	San Mateo	3
Brooks	95606	Yolo	12
Browns Valley	95918	Yuba	11
Brownsville	95919	Yuba	11
Buellton	93427	Santa Barbara	5
Buena Park	90620	Orange	8
Buena Park	90621	Orange	8
Burbank	91501	Los Angeles	9
Burbank	91502	Los Angeles	9
Burbank	91504	Los Angeles	9
Burbank	91505	Los Angeles	9
Burbank	91506	Los Angeles	9
Burbank	91521	Los Angeles	9
Burbank	91522	Los Angeles	9
Burbank	91523	Los Angeles	9
Burlingame	94010	San Mateo	3
Burney	96013	Shasta	16
Burney	96013	Siskiyou	16
Burnt Ranch	95527	Trinity	16
Butte City	95920	Glenn	11
Buttonwillow	93206	Kern	13
Byron	94514	Alameda	12
Byron	94514	Contra Costa	12

C

Cabazon	92230	Riverside	15
Calexico	92231	Imperial	15
Caliente	93518	Kern	16
California City	93505	Kern	14
California City	93505	San Bernardino	14
California Hot Springs	93207	Tulare	13
Calimesa	92320	Riverside	10
Calipatria	92233	Imperial	15
Calistoga	94515	Napa	2
Calistoga	94515	Sonoma	2
Callahan	96014	Siskiyou	16
Callahan	96014	Trinity	16
Calpine	96124	Sierra	16
Camarillo	93010	Ventura	6

CITY	ZIP CODE	COUNTY	CZ
Camarillo	93012	Ventura	6
Cambria	93428	San Luis Obispo	5
Camino	95709	El Dorado	12
Camp Pendelton North	92055	San Diego	7
Campbell	95008	Santa Clara	4
Campo	91906	San Diego	14
Camptonville	95922	Sierra	16
Camptonville	95922	Yuba	16
Canby	96015	Modoc	16
Cantua Creek	93608	Fresno	13
Canyon Country	91351	Los Angeles	9
Canyon Country	91387	Los Angeles	9
Canyon Country	91390	Los Angeles	16
Canyondam	95923	Plumas	16
Capay	95607	Yolo	12
Capistrano Beach	92624	Orange	6
Capitola	95010	Santa Cruz	3
Cardiff by the	92007	San Diego	7

Sea			
Carlotta	95528	Humboldt	1
Carlsbad	92008	San Diego	7
Carlsbad	92009	San Diego	7
Carlsbad	92010	San Diego	7
Carlsbad	92011	San Diego	7
Carmel	93923	Monterey	3
Carmel Valley	93924	Monterey	3
Carmichael	95608	Sacramento	12
Carnelian Bay	96140	Placer	16
Carpinteria	93013	Santa Barbara	6
Carpinteria	93013	Ventura	6
Carson	90745	Los Angeles	6
Carson	90746	Los Angeles	8
Carson	90747	Los Angeles	8
Caruthers	93609	Fresno	13
Casmalia	93429	Santa Barbara	5
Caspar	95420	Mendocino	1
Cassel	96016	Shasta	16
Castaic	91384	Los Angeles	9
Castro Valley	94546	Alameda	3
Castro Valley	94552	Alameda	3
Castroville	95012	Monterey	3
Cathedral City	92234	Riverside	15
Catheys Valley	95306	Mariposa	12
Cayucos	93430	San Luis Obispo	5
Cazadero	95421	Sonoma	1
Cedar Glen	92321	San Bernardino	16
Cedarpines Park	92322	San Bernardino	16
Cedarville	96104	Modoc	16
Ceres	95307	Stanislaus	12
Cerritos	90703	Los Angeles	8
Challenge	95925	Yuba	16
Chatsworth	91311	Los Angeles	9
Chatsworth	91311	Ventura	9
CITY	**ZIP CODE**	**COUNTY**	**CZ**
Chester	96020	Plumas	16
Chico	95926	Butte	11
Chico	95928	Butte	11
Chico	95928	Glenn	11
Chico	95973	Butte	11
Chico	95973	Tehama	11
Chilcoot	96105	Plumas	16
Chinese Camp	95309	Tuolumne	12
Chino	91708	San Bernardino	10
Chino	91710	Los Angeles	10
Chino	91710	San Bernardino	10
Chino Hills	91709	San Bernardino	10
Chowchilla	93610	Madera	13
Chowchilla	93610	Merced	13
Chualar	93925	Monterey	3
Chula Vista	91910	San Diego	7
Chula Vista	91911	San Diego	7
Chula Vista	91913	San Diego	7
Chula Vista	91914	San Diego	10
Chula Vista	91915	San Diego	7
Chula Vista	91932	San Diego	7
Cilo	96106	Plumas	16
Citrus Heights	95610	Sacramento	12
Citrus Heights	95621	Sacramento	12
Claremont	91711	Los Angeles	9
Clarksburg	95612	Yolo	12
Clayton	94517	Contra Costa	12
Clearlake	95422	Lake	2
Clearlake Oaks	95423	Colusa	2
Clearlake Oaks	95423	Lake	2
Cloverdale	95425	Sonoma	2
Clovis	93611	Fresno	13
Clovis	93612	Fresno	13
Clovis	93619	Fresno	13
Coachella	92236	Riverside	15
Coalinga	93210	Fresno	13
Coarsegold	93614	Madera	13
Coleville	96107	Mono	16
Colfax	95713	Placer	11
College City	95912	Colusa	11
Colton	92324	Riverside	10
Colton	92324	San Bernardino	10

Columbia	95310	Tuolumne	12
Colusa	95932	Colusa	11
Comptche	95427	Mendocino	1
Compton	90220	Los Angeles	8
Compton	90221	Los Angeles	8
Compton	90222	Los Angeles	8
Concord	94518	Contra Costa	12
Concord	94519	Contra Costa	12
Concord	94520	Contra Costa	12
Concord	94521	Contra Costa	12
CITY	**ZIP CODE**	**COUNTY**	**CZ**
Cool	95614	El Dorado	12
Cool	95614	Placer	12
Cooperopolis	95228	Calaveras	12
Cooperopolis	95228	Tuolumne	12
Corcoran	93212	Kings	13
Corcoran	93212	Tulare	13
Corning	96021	Tehama	11
Corona	92879	Riverside	10
Corona	92880	Riverside	10
Corona	92880	San Bernardino	10
Corona	92881	Riverside	10
Corona	92882	Riverside	10
Corona	92883	Riverside	10
Corona dl Mar	92625	Orange	6
Coronado	92118	San Diego	7
Corte Madera	94925	Marin	3
Costa Mesa	92626	Orange	6
Costa Mesa	92627	Orange	6
Cotati	94931	Sonoma	2
Coto De Caza	92679	Orange	8
Cottonwood	96022	Shasta	11
Cottonwood	96022	Tehama	11
Coulterville	95311	Mariposa	12
Coulterville	95311	Tuolumne	12
Courtland	95615	Sacramento	12
Courtland	95615	Yolo	12
Covelo	95428	Mendocino	2
Covelo	95428	Tehama	2
Covina	91722	Los Angeles	9
Covina	91723	Los Angeles	9
Covina	91724	Los Angeles	9
Crescent City	95531	Del Norte	1
Crescent Mills	95934	Plumas	16
Crestline	92325	San Bernardino	16
Creston	93432	San Luis Obispo	4
Crockett	94525	Contra Costa	12
Crows Landing	95313	Stanislaus	12
Culver City	90230	Los Angeles	8
Culver City	90232	Los Angeles	8
Cupertino	95014	Santa Clara	4
Cutler	93615	Tulare	13
Cypress	90630	Orange	8

D

Daggett	92327	San Bernardino	14
Daly City	94014	San Francisco	3
Daly City	94014	San Mateo	3
Daly City	94015	San Francisco	3
Daly City	94015	San Mateo	3
Dan Point	92629	Orange	6
Danville	94506	Contra Costa	12
Danville	94526	Contra Costa	12
CITY	**ZIP CODE**	**COUNTY**	**CZ**
Davenport	95017	Santa Cruz	3
Davis	95616	Solano	12
Davis	95616	Yolo	12
Davis	95618	Solano	12
Davis	95618	Yolo	12
Davis Creek	96108	Modoc	16
Death Valley	92328	Inyo	14
Deer Park	94576	Napa	2
Del Mar	92014	San Diego	7
Del Rey	93616	Fresno	13
Delano	93215	Kern	13
Delano	93215	Tulare	13

Delhi	95315	Merced	12
Denair	95316	Merced	12
Denair	95316	Stanislaus	12
Descanso	91916	San Diego	14
Desert Hot Springs	92240	Riverside	15
Desert Hot Springs	92241	Riverside	15
Diablo	94528	Contra Costa	12
Diamond Bar	91765	Los Angeles	9
Diamond Springs	95619	El Dorado	12
Dillon Beach	94929	Marin	3
Dinuba	93618	Fresno	13
Dinuba	93618	Tulare	13
Discovery Bay	94505	Contra Costa	12
Dixon	95620	Solano	12
Dixon	95620	Yolo	12
Dobbins	95935	Yuba	11
Dorris	96023	Siskiyou	16
Dos Palos	93620	Fresno	12
Dos Palos	93620	Madera	12
Dos Palos	93620	Merced	12
Dos Rios	95429	Mendocino	2
Douglas City	96024	Trinity	16
Downey	90240	Los Angeles	8
Downey	90241	Los Angeles	8
Downey	90242	Los Angeles	8
Downieville	95936	Sierra	16
Doyle	96109	Lassen	16
Duarte	91008	Los Angeles	16
Duarte	91010	Los Angeles	9
Dublin	94568	Alameda	12
Dublin	94568	Contra Costa	12
Dulzura	91917	San Diego	10
Dunlap	93621	Fresno	13
Dunnigan	95937	Yolo	12
Dunsmuir	96025	Shasta	16
Dunsmuir	96025	Siskiyou	16
Durham	95938	Butte	11
Dutch Flat	95714	Placer	16

CITY	ZIP CODE	COUNTY	CZ

E

Eagle Mountain	92239	Riverside	15
Earlimart	93219	Tulare	13
Echo Lake	95721	El Dorado	16
Edwards AFB	93524	Kern	14
Edwards AFB	93524	San Bernardino	14
El Cajon	92019	San Diego	10
El Cajon	92020	San Diego	7
El Cajon	92021	San Diego	10
El Centro	92243	Imperial	15
El Cerrito	94530	Contra Costa	3
El Dorado	95623	El Dorado	12
El Dorado Hills	95762	El Dorado	12
El Dorado Hills	95762	Sacramento	12
El Monte	91731	Los Angeles	9
El Monte	91732	Los Angeles	9
El Nido	95317	Merced	12
El Portal	95318	Mariposa	16
El Segundo	90245	Los Angeles	6
El Sobrante	94803	Contra Costa	3
El Toro	92630	Orange	8
Elk	95432	Mendocino	1
Elk Creek	95939	Glenn	11
Elk Grove	95624	Sacramento	12
Elk Grove	95757	Sacramento	12
Elk Grove	95758	Sacramento	12
Elverta	95626	Placer	12
Elverta	95626	Sacramento	12
Elverta	95626	Sutter	12
Emeryville	94608	Alameda	3
Emigrant Gap	95715	Placer	16
Encinitas	92024	San Diego	7
Escalon	95320	San Joaquin	12
Escondido	92025	San Diego	10

Escondido	92026	San Diego	10
Escondido	92027	San Diego	10
Escondido	92029	San Diego	10
Esparto	95627	Yolo	12
Essex	92332	San Bernardino	14
Etna	96027	Siskiyou	16
Eureka	95501	Humboldt	1
Eureka	95503	Humboldt	1
Exeter	93221	Tulare	13

F

Fair Oaks	95628	Sacramento	12
Fairfax	94930	Marin	2
Fairfield	94533	Solano	12
Fairfield	94534	Solano	12
Fairfield	94535	Solano	12
CITY	**ZIP CODE**	**COUNTY**	**CZ**
Fall River Mills	96028	Shasta	16
Fallbrook	92028	Riverside	10
Fallbrook	92028	San Diego	10
Farmersville	93223	Tulare	13
Farmington	95230	Calaveras	12
Farmington	95230	San Joaquin	12
Farmington	95230	Stanislaus	12
Fellows	93224	Kern	13
Felton	95018	Santa Cruz	3
Ferndale	95536	Humboldt	1
Fiddletown	95629	Amador	12
Fiddletown	95629	El Dorado	12
Fillmore	93015	Ventura	9
Firebaugh	93622	Fresno	13
Firebaugh	93622	Madera	13
Firebaugh	93622	Merced	13
Fish Camp	93623	Mariposa	16
Floriston	96111	Nevada	16
Folsom	95630	Sacramento	12
Fontana	92335	San Bernardino	10
Fontana	92336	San Bernardino	10
Fontana	92337	San Bernardino	10
Foothill Ranch	92610	Orange	8
Forbestown	95941	Butte	11
Forbestown	95941	Yuba	11
Forest Falls	92339	San Bernardino	16
Forest Ranch	95942	Butte	16
Forest Ranch	95942	Tehama	16
Foresthill	95631	Placer	16
Forestville	95436	Sonoma	2
Forks of Salmon	96031	Siskiyou	16
Forks of Salmon	96031	Trinity	16
Fort Bidwell	96112	Modoc	16
Fort Bragg	95437	Mendocino	1
Fort Irwin	92310	San Bernardino	14
Fort Jones	96032	Siskiyou	16
Fortuna	95540	Humboldt	1
Fountain Valley	92708	Orange	6
Fowler	93625	Fresno	13
Frazier Park	93225	Kern	16
Frazier Park	93225	Ventura	16
Freedom	95019	Santa Cruz	3
Fremont	94536	Alameda	3
Fremont	94538	Alameda	3
Fremont	94539	Alameda	3
Fremont	94539	Santa Clara	3
Fremont	94555	Alameda	3
French Camp	95231	San Joaquin	12
French Gulch	96033	Shasta	11
Fresno	93650	Fresno	13
Fresno	93701	Fresno	13
Fresno	93702	Fresno	13
CITY	**ZIP CODE**	**COUNTY**	**CZ**
Fresno	93703	Fresno	13
Fresno	93704	Fresno	13
Fresno	93705	Fresno	13
Fresno	93706	Fresno	13
Fresno	93710	Fresno	13
Fresno	93711	Fresno	13

Fresno	93720	Fresno	13
Fresno	93720	Madera	13
Fresno	93721	Fresno	13
Fresno	93722	Fresno	13
Fresno	93723	Fresno	13
Fresno	93725	Fresno	13
Fresno	93726	Fresno	13
Fresno	93727	Fresno	13
Fresno	93728	Fresno	13
Fresno	93730	Fresno	13
Fresno	93730	Madera	13
Fresno	93741	Fresno	13
Friant	93626	Fresno	13
Friant	93626	Madera	13
Fullerton	92831	Orange	8
Fullerton	92832	Orange	8
Fullerton	92833	Orange	8
Fullerton	92835	Orange	8

G

Galt	95632	Sacramento	12
Galt	95632	San Joaquin	12
Garberville	95542	Humboldt	2
Garberville	95542	Trinity	2
Garberville	95554	Humboldt	2
Garden Grove	92840	Orange	8
Garden Grove	92841	Orange	8
Garden Grove	92843	Orange	8
Garden Grove	92844	Orange	8
Garden Grove	92845	Orange	8
Garden Valley	95633	El Dorado	12
Gardena	90247	Los Angeles	8
Gardena	90248	Los Angeles	8
Gardena	90249	Los Angeles	8
Gasquet	95543	Del Norte	16
Gazelle	96034	Siskiyou	16
Georgetown	95634	El Dorado	12
Gerber	96035	Tehama	11
Geyserville	95441	Sonoma	2
Gilroy	95020	Santa Clara	4
Glen Ellen	95442	Sonoma	2
Glencoe	95232	Calaveras	12
Glendale	91201	Los Angeles	9
Glendale	91202	Los Angeles	9
Glendale	91203	Los Angeles	9
Glendale	91204	Los Angeles	9

CITY	ZIP CODE	COUNTY	CZ
Glendale	91205	Los Angeles	9
Glendale	91206	Los Angeles	9
Glendale	91207	Los Angeles	9
Glendale	91208	Los Angeles	9
Glendora	91740	Los Angeles	9
Glendora	91741	Los Angeles	9
Glenn	95943	Butte	11
Glenn	95943	Glenn	11
Glennville	93226	Kern	16
Gold Run	95717	Placer	16
Goleta	93117	Santa Barbara	6
Gonzales	93926	Monterey	3
Goodyears Bar	95944	Sierra	16
Grand Terrace	92313	San Bernardino	10
Granite Bay	95746	Placer	11
Grass Valley	95945	Nevada	11
Grass Valley	95949	Nevada	11
Graton	95444	Sonoma	2
Greenfield	93927	Monterey	4
Greenville	95947	Plumas	16
Greenwood	95635	El Dorado	12
Grenada	96038	Siskiyou	16
Gridley	95948	Butte	11
Gridley	95948	Sutter	11
Grizzly Flats	95636	El Dorado	16
Groveland	95321	Mariposa	16
Groveland	95321	Tuolumne	16
Grover Beach	93433	San Luis Obispo	5
Guadalupe	93434	Santa Barbara	5

Gualala	95445	Mendocino	1
Guerneville	95446	Sonoma	2
Guinda	95637	Yolo	12
Gustin	95322	Merced	12
Gustin	95322	Stanislaus	12

H

Hacienda Heights	91745	Los Angeles	9
Half Moon Bay	94019	San Mateo	3
Hamilton	95951	Glenn	11
Hanford	93230	Kings	13
Happy Camp	96039	Siskiyou	16
Harbor City	90710	Los Angeles	6
Hat Creek	96040	Shasta	16
Hawaiian Gardens	90716	Los Angeles	8
Hawthorne	90250	Los Angeles	8
Hayford	96041	Trinity	16
Hayward	94541	Alameda	3
Hayward	94542	Alameda	3
Hayward	94544	Alameda	3
Hayward	94545	Alameda	3
Healdsberg	95448	Sonoma	2
CITY	**ZIP CODE**	**COUNTY**	**CZ**
Heber	92249	Imperial	15
Helendale	92342	San Bernardino	14
Helm	93627	Fresno	13
Hemet	92543	Riverside	10
Hemet	92544	Riverside	10
Hemet	92545	Riverside	10
Herald	95638	Sacramento	12
Hercules	94547	Contra Costa	3
Herlong	96113	Lassen	16
Hermosa Beach	90254	Los Angeles	6
Hesperia	92344	San Bernardino	14
Hesperia	92345	San Bernardino	14
Hickman	95323	Stanislaus	12
Hidden Hills	91302	Los Angeles	9
Hidden Valley Lake	95467	Lake	2
Highland	92346	San Bernardino	10
Hilmar	95324	Merced	12
Hinley	92347	San Bernardino	14
Hollister	95023	San Benito	4
Hollister	95023	Santa Clara	4
Holtville	92250	Imperial	15
Homeland	92548	Riverside	10
Homewood	96141	Placer	16
Hoopa	95546	Humboldt	2
Hopland	95449	Mendocino	2
Hornbrook	96044	Siskiyou	16
Hornitos	95325	Mariposa	12
Hughson	95326	Stanislaus	12
Huntington Beach	92646	Orange	6
Huntington Beach	92647	Orange	6
Huntington Beach	92648	Orange	6
Huntington Beach	92649	Orange	6
Huntington Park	90255	Los Angeles	8
Huron	93234	Fresno	13
Hyampom	96046	Humboldt	16
Hyampom	96046	Trinity	16
Hydesville	95547	Humboldt	1

I

Idyllwild	92549	Riverside	16
Igo	96047	Shasta	11
Imperial	92251	Imperial	15
Independence	93526	Inyo	16
Indian Wells	92210	Riverside	15
Indio	92201	Riverside	15
Indio	92203	Riverside	15
Inglewood	90301	Los Angeles	8

Inglewood	90302	Los Angeles	8
Inglewood	90303	Los Angeles	8
Inglewood	90304	Los Angeles	8
Inglewood	90305	Los Angeles	8

CITY	ZIP CODE	COUNTY	CZ
Inverness	94937	Marin	3
Inyokern	93527	Inyo	16
Inyokern	93527	Kern	16
Ione	95640	Amador	12
Irvine	92602	Orange	8
Irvine	92603	Orange	8
Irvine	92604	Orange	8
Irvine	92606	Orange	8
Irvine	92612	Orange	8
Irvine	92614	Orange	8
Irvine	92617	Orange	8
Irvine	92618	Orange	8
Irvine	92620	Orange	8
Irvine	92697	Orange	8
Isleton	95641	Sacramento	12
Ivanhoe	93235	Tulare	13

J

Jackson	95642	Amador	12
Jacumba	91934	San Diego	14
Jamestown	95327	Tuolumne	12
Jamul	91935	San Diego	10
Janesville	96114	Lassen	16
Janesville	96114	Plumas	16
Jenner	95450	Sonoma	1
Johannesburg	93528	Kern	14
Johnson Valley	92285	San Bernardino	14
Joshua Tree	92252	San Bernardino	14
Julian	92036	San Diego	15
Junction City	96048	Trinity	16
June Lake	93529	Mono	16
	93531	Kern	16

K

Keene			
Kelseyville	95451	Lake	2
Kelso	92309	San Bernardino	14
Kentfield	94904	Marin	2
Kenwood	95452	Sonoma	2
Kerman	93630	Fresno	13
Kernville	93238	Kern	16
Kettleman City	93239	Kings	13
King City	93930	Monterey	4
Kings Beach	96143	Placer	16
Kings Canyon National Park	93633	Fresno	16
Kingsburg	93631	Fresno	13
Kingsburg	93631	Kings	13
Kingsburg	93631	Tulare	13
Klamath	95548	Del Norte	1
Klamath River	96050	Siskiyou	16
Kneeland	95549	Humboldt	2

CITY	ZIP CODE	COUNTY	CZ
Knights Landing	95645	Sutter	11
Knights Landing	95645	Yolo	11
Knightsen	94548	Contra Costa	12
Korbel	95550	Humboldt	2
Kyburz	95720	El Dorado	16

L

La Canada Flintridge	91011	Los Angeles	16
La Grange	95329	Mariposa	12
La Grange	95329	Stanislaus	12
La Grange	95329	Tuolumne	12
La Habra	90631	Los Angeles	8
La Habra	90631	Orange	8
La Honda	94020	San Mateo	3
La Honda	94020	Santa Clara	3
La Mesa	91941	San Diego	10

CITY	ZIP CODE	COUNTY	CZ
La Mesa	91942	San Diego	10
La Mirada	90638	Los Angeles	9
La Mirada	90639	Los Angeles	9
La Palma	90623	Orange	8
La Porte	95981	Plumas	16
La Porte	95981	Yuba	16
La Puente	91744	Los Angeles	9
La Puente	91746	Los Angeles	9
La Quinta	92253	Riverside	15
La Verne	91750	Los Angeles	9
Lafayette	94549	Contra Costa	12
Laguna Beach	92651	Orange	6
Laguna Hills	92653	Orange	8
Laguna Niguel	92677	Orange	6
Laguna Woods	92637	Orange	8
Lagunitas	94938	Marin	3
Lagunitas-Forest Knolls	94933	Marin	3
Lake Arrowhead	92352	San Bernardino	16
Lake City	96115	Modoc	16
Lake Elsinore	92530	Orange	10
Lake Elsinore	92530	Riverside	10
Lake Elsinore	92532	Riverside	10
Lake Hughes	93532	Los Angeles	14
Lake Isabella	93240	Kern	16
Lake View Ter	91342	Los Angeles	9
Lakehead	96051	Shasta	11
Lakeport	95453	Lake	2
Lakeside	92040	San Diego	10
Lakewood	90712	Los Angeles	8
Lakewood	90713	Los Angeles	8
Lakewood	90715	Los Angeles	8
Lamont	93241	Kern	13
Lancaster	93534	Los Angeles	14
Lancaster	93535	Los Angeles	14
Lancaster	93536	Kern	14
Lancaster	93536	Los Angeles	14
Larkspur	94939	Marin	3
Lathrop	95330	San Joaquin	12
Laton	93242	Fresno	13
Laton	93242	Kings	13
Lawndale	90260	Los Angeles	8
Laytonville	95454	Mendocino	2
Laytonville-Leggett	95488	Mendocino	1
Laytonville-Leggett	95585	Mendocino	1
Le Grand	95333	Merced	12
Lebec	93243	Kern	16
Lebec	93243	Los Angeles	16
Lebec	93243	Ventura	16
Lee Vining	93541	Mono	16
Lemon Grove	91945	San Diego	10
Lemoncove	93244	Tulare	13
Lemoore	93245	Kings	13
Lewiston	96052	Trinity	16
Likely	96116	Modoc	16
Lincoln	95648	Placer	11
Linden	95236	San Joaquin	12
Lindsay	93247	Tulare	13
Litchfield	96117	Lassen	16
Littlerock	93543	Los Angeles	14
Live Oaks	95953	Sutter	11
Live Oaks	95953	Yuba	11
Livermore	94550	Alameda	12
Livermore	94550	Santa Clara	12
Livermore	94551	Alameda	12
Livermore	94551	Contra Costa	12
Livingston	95334	Merced	12
Llano	93544	Los Angeles	14
Lockerford	95237	San Joaquin	12
Lockwood	93932	Monterey	4
Lodi	95240	San Joaquin	12
Lodi	95242	San Joaquin	12
Loleta	95551	Humboldt	1
Loma Linda	92350	San Bernardino	10
Loma Linda	92354	San Bernardino	10

Lomita	90717	Los Angeles	6
Lompoc	93436	Santa Barbara	5
Lompoc	93437	Santa Barbara	5
Lone Pine	93545	Inyo	16
Long Barn	95335	Tuolumne	16
Long Beach	90802	Los Angeles	6
Long Beach	90803	Los Angeles	6
Long Beach	90804	Los Angeles	6
Long Beach	90805	Los Angeles	8
Long Beach	90806	Los Angeles	6
Long Beach	90807	Los Angeles	8

CITY	ZIP CODE	COUNTY	CZ
Long Beach	90808	Los Angeles	8
Long Beach	90810	Los Angeles	6
Long Beach	90813	Los Angeles	6
Long Beach	90814	Los Angeles	6
Long Beach	90815	Los Angeles	6
Long Beach	90840	Los Angeles	6
Lookout	96054	Modoc	16
Loomis	95650	Placer	11
Los Alamitos	90720	Orange	8
Los Altos	94022	Santa Clara	4
Los Altos	94024	Santa Clara	4
Los Angeles	90001	San Diego	8
Los Angeles	90002	San Diego	8
Los Angeles	90003	San Diego	8
Los Angeles	90004	Los Angeles	9
Los Angeles	90005	Los Angeles	9
Los Angeles	90006	Los Angeles	9
Los Angeles	90007	Los Angeles	8
Los Angeles	90008	Los Angeles	8
Los Angeles	90010	Los Angeles	9
Los Angeles	90011	Los Angeles	8
Los Angeles	90012	Los Angeles	9
Los Angeles	90013	Los Angeles	9
Los Angeles	90014	Los Angeles	9
Los Angeles	90015	Los Angeles	9
Los Angeles	90016	Los Angeles	8
Los Angeles	90017	Los Angeles	9
Los Angeles	90018	Los Angeles	8
Los Angeles	90019	Los Angeles	9
Los Angeles	90020	Los Angeles	9
Los Angeles	90021	Los Angeles	9
Los Angeles	90022	Los Angeles	9
Los Angeles	90023	Los Angeles	8
Los Angeles	90024	Los Angeles	9
Los Angeles	90025	Los Angeles	6
Los Angeles	90026	Los Angeles	9
Los Angeles	90027	Los Angeles	9
Los Angeles	90028	Los Angeles	9
Los Angeles	90029	Los Angeles	9
Los Angeles	90031	Los Angeles	9
Los Angeles	90032	Los Angeles	9
Los Angeles	90033	Los Angeles	9
Los Angeles	90034	Los Angeles	8
Los Angeles	90035	Los Angeles	9
Los Angeles	90036	Los Angeles	9
Los Angeles	90037	Los Angeles	8
Los Angeles	90038	Los Angeles	9
Los Angeles	90039	Los Angeles	9
Los Angeles	90040	Los Angeles	8
Los Angeles	90041	Los Angeles	9
Los Angeles	90042	Los Angeles	9
Los Angeles	90043	Los Angeles	8

CITY	ZIP CODE	COUNTY	CZ
Los Angeles	90044	Los Angeles	8
Los Angeles	90045	Los Angeles	6
Los Angeles	90046	Los Angeles	9
Los Angeles	90047	Los Angeles	8
Los Angeles	90048	Los Angeles	9
Los Angeles	90049	Los Angeles	6
Los Angeles	90056	Los Angeles	8
Los Angeles	90057	Los Angeles	9
Los Angeles	90058	Los Angeles	8
Los Angeles	90059	Los Angeles	8
Los Angeles	90061	Los Angeles	8
Los Angeles	90062	Los Angeles	8
Los Angeles	90063	Los Angeles	9

Los Angeles	90064	Los Angeles	9
Los Angeles	90065	Los Angeles	9
Los Angeles	90066	Los Angeles	6
Los Angeles	90067	Los Angeles	9
Los Angeles	90068	Los Angeles	9
Los Angeles	90071	Los Angeles	9
Los Angeles	90073	Los Angeles	6
Los Angeles	90077	Los Angeles	9
Los Angeles	90089	Los Angeles	8
Los Angeles	90094	Los Angeles	6
Los Angeles	90095	Los Angeles	9
Los Angeles	91306	Los Angeles	9
Los Angeles	91316	Los Angeles	9
Los Angeles	91324	Los Angeles	9
Los Angeles	91325	Los Angeles	9
Los Angeles	91330	Los Angeles	9
Los Angeles	91331	Los Angeles	9
Los Angeles	91335	Los Angeles	9
Los Angeles	91343	Los Angeles	9
Los Angeles	91356	Los Angeles	9
Los Angeles	91401	Los Angeles	9
Los Angeles	91402	Los Angeles	9
Los Angeles	91403	Los Angeles	9
Los Angeles	91405	Los Angeles	9
Los Angeles	91406	Los Angeles	9
Los Angeles	91411	Los Angeles	9
Los Angeles	91423	Los Angeles	9
Los Angeles	91436	Los Angeles	9
Los Angeles	91606	Los Angeles	9
Los Banos	93635	Merced	12
Los Gatos	95030	Santa Clara	4
Los Gatos	95032	Santa Clara	4
Los Gatos	95033	Santa Clara	4
Los Gatos	95033	Santa Cruz	4
Los Molinos	96055	Tehama	11
Lost Hills	93249	Kern	13
Lotus	95651	El Dorado	12
Lower Lake	95457	Lake	2
Loyalton	96118	Sierra	16

CITY	ZIP CODE	COUNTY	CZ
Lucerne	95458	Lake	2
Lucerne Valley	92356	San Bernardino	14
Ludlow	92338	San Bernardino	14
Lynwood	90262	Los Angeles	8
Lytle Creek	92358	San Bernardino	16

M

Macdoel	96058	Siskiyou	16
Mad River	95552	Trinity	2
Madeline	96119	Lassen	16
Madera	93636	Madera	13
Madera	93637	Madera	13
Madera	93638	Madera	13
Madison	95653	Yolo	12
Magalia	95954	Butte	11
Malibu	90263	Los Angeles	6
Malibu	90265	Los Angeles	6
Mammoth Lakes	93546	Mono	16
Manchester	95459	Mendocino	1
Manhattan Beach	90266	Los Angeles	6
Manteca	95336	San Joaquin	12
Manteca	95337	San Joaquin	12
Manton	96059	Shasta	11
Manton	96059	Tehama	11
March Air Reserve Base	92518	Riverside	10
Maricopa	93252	Kern	13
Maricopa	93252	San Luis Obispo	13
Maricopa	93252	Santa Barbara	13
Maricopa	93252	Ventura	13
Marin del Rey	90292	Los Angeles	6
Marina	93933	Monterey	3
Mariposa	95338	Mariposa	12
Markleeville	96120	Alpine	16
Martinez	94553	Contra Costa	12
Marysville	95901	Butte	11

Marysville	95901	Sutter	11
Marysville	95901	Yuba	11
Mather	95655	Sacramento	12
Maxwell	95955	Colusa	11
Maywood	90270	Los Angeles	8
McArthur	96056	Lassen	16
McArthur	96056	Modoc	16
McArthur	96056	Shasta	16
McClellan	95652	Sacramento	12
McCloud	96057	Siskiyou	16
McFarland	93250	Kern	13
McKinleyville	95519	Humboldt	1
McKittrick	93251	Kern	13
McKittrick	93251	San Luis Obispo	13
Meadow Valley	95956	Plumas	16
Meadow Vista	95722	Placer	11

CITY	ZIP CODE	COUNTY	CZ
Mecca	92254	Riverside	15
Mendonico	95460	Mendocino	1
Mendonico-Anderson	95410	Mendocino	1
Mendonico-Anderson	95456	Mendocino	1
Mendota	93640	Fresno	13
Menlo Park	94025	San Mateo	3
Mentone	92359	San Bernardino	16
Merced	95340	Merced	12
Merced	95341	Merced	12
Merced	95348	Merced	12
Meridian	95957	Sutter	11
Middletown	95461	Lake	2
Middletown	95461	Sonoma	2
Midpines	95345	Mariposa	12
Midway City	92655	Orange	6
Milford	96121	Lassen	16
Mill Valley	94941	Marin	3
Millbrae	94030	San Mateo	3
Millville	96062	Shasta	11
Milpitas	95035	Alameda	4
Milpitas	95035	Santa Clara	4
Mineral	96063	Plumas	16
Mineral	96063	Tehama	16
Mira Loma	91752	Riverside	10
Miramonte	93641	Fresno	13
Mission Viejo	92691	Orange	8
Mission Viejo	92692	Orange	8
Mission Viejo	92694	Orange	8
Mi-Wuk Village	95346	Tuolumne	16
Modesto	95350	Stanislaus	12
Modesto	95351	Stanislaus	12
Modesto	95354	Stanislaus	12
Modesto	95355	Stanislaus	12
Modesto	95356	Stanislaus	12
Modesto	95357	Stanislaus	12
Modesto	95358	Stanislaus	12
Mojave	93501	Kern	14
Mojave	93519	Kern	14
Mokelumne Hill	95245	Calaveras	12
Monrovia	91016	Los Angeles	9
Montague	96064	Siskiyou	16
Montclair	91763	San Bernardino	10
Monte Rio	95462	Sonoma	1
Montebello	90640	Los Angeles	9
Monterey	93940	Monterey	3
Monterey	93943	Monterey	3
Monterey Park	91754	Los Angeles	9
Monterey Park	91755	Los Angeles	9
Montgomery Creek	96065	Shasta	16
Montrose	91020	Los Angeles	9

CITY	ZIP CODE	COUNTY	CZ
Montrose	91214	Los Angeles	9
Moorpark	93021	Ventura	9
Moraga	94556	Contra Costa	3
Moreno Valley	92551	Riverside	10
Moreno Valley	92553	Riverside	10
Moreno Valley	92555	Riverside	10
Moreno Valley	92557	Riverside	10

Morgan Hill	95037	Santa Clara	4
Morongo Valley	92256	San Bernardino	14
Morro Bay	93442	San Luis Obispo	5
Moss Beach	94038	San Mateo	3
Moss Landing	95039	Monterey	3
Mount Hamilton	95140	Santa Clara	4
Mountain Center	92561	Riverside	16
Mountain Ranch	95246	Calaveras	12
Mountain View	94035	Santa Clara	4
Mountain View	94040	Santa Clara	4
Mountain View	94041	Santa Clara	4
Mountain View	94043	Santa Clara	4
Mt Baldy	91759	San Bernardino	16
Mt Shasta	96067	Siskiyou	16
Murphys	95247	Calaveras	12
Murrieta	92562	Riverside	10
Murrieta	92563	Riverside	10

N

Napa	94558	Napa	2
Napa	94558	Sonoma	2
Napa	94559	Napa	2
National City	91950	San Diego	7
Needles	92363	San Bernardino	15
Nevada City	95959	Nevada	11
New Cuyama	93254	Santa Barbara	4
Neward	94560	Alameda	3
Newberry Springs	92365	San Bernardino	14
Newcastle	95658	Placer	11
Newman	95360	Merced	12
Newman	95360	Stanislaus	12
Newport Beach	92657	Orange	6
Newport Beach	92660	Orange	6
Newport Beach	92661	Orange	6
Newport Beach	92663	Orange	6
Nicasio	94946	Marin	2
Nice	95464	Lake	2
Nicolaus	95659	Sutter	11
Niland	92257	Imperial	15
Nipomo	93444	San Luis Obispo	5
Nipton	92364	San Bernardino	14
Norco	92860	Riverside	10
Norden	95724	Nevada	16
Norden	95724	Placer	16
North Coast	90742	Orange	6

CITY	ZIP CODE	COUNTY	CZ
North Edwards	93523	Kern	14
North Fork	93643	Madera	16
North Highlands	95660	Sacramento	12
North San Juan	95960	Nevada	16
North San Juan	95960	Sierra	16
North San Juan	95960	Yuba	16
Nortwest Marin	94940	Marin	3
Norwalk	90650	Los Angeles	8
Novato	94945	Marin	2
Novato	94947	Marin	2
Novato	94949	Marin	2
Nuevo	92567	Riverside	10

O

Oak Park	91377	Ventura	9
Oak Run	96069	Shasta	11
Oak View	93022	Ventura	9
Oakdale	95361	San Joaquin	12
Oakdale	95361	Stanislaus	12
Oakhurst	93644	Madera	16
Oakhurst	93644	Mariposa	16
Oakland	94601	Alameda	3
Oakland	94602	Alameda	3
Oakland	94603	Alameda	3
Oakland	94605	Alameda	3
Oakland	94606	Alameda	3
Oakland	94607	Alameda	3
Oakland	94609	Alameda	3

Oakland	94610	Alameda	3
Oakland	94611	Alameda	3
Oakland	94611	Contra Costa	3
Oakland	94612	Alameda	3
Oakland	94613	Alameda	3
Oakland	94618	Alameda	3
Oakland	94619	Alameda	3
Oakland	94621	Alameda	3
Oakley	94561	Contra Costa	12
Occidental	95465	Sonoma	1
Oceano	93445	San Luis Obispo	5
Oceanside	92054	San Diego	7
Oceanside	92056	San Diego	7
Oceanside	92057	San Diego	7
Oceanside	92058	San Diego	7
Ocotillo	92259	Imperial	15
Ojai	93023	Ventura	~~16~~9
Old Station	96071	Shasta	16
Olivehurst	95961	Yuba	11
O'Neals	93645	Madera	13
Ontario	91761	San Bernardino	10
Ontario	91762	San Bernardino	10
Ontario	91764	San Bernardino	10
Onyx	93255	Kern	16
CITY	**ZIP CODE**	**COUNTY**	**CZ**
Orange	92862	Orange	8
Orange	92865	Orange	8
Orange	92866	Orange	8
Orange	92867	Orange	8
Orange	92868	Orange	8
Orange	92869	Orange	8
Orange Cove	93646	Fresno	13
Orange Cove	93646	Tulare	13
Orangevale	95662	Sacramento	12
Oregon House	95962	Yuba	11
Orick	95555	Humboldt	1
Orinda	94563	Contra Costa	12
Orland	95963	Glenn	11
Orland	95963	Tehama	11
Orleans	95556	Humboldt	2
Oro Grande	92368	San Bernardino	14
Orosi	93647	Fresno	13
Orosi	93647	Tulare	13
Oroville	95965	Butte	11
Oroville	95966	Butte	11
Oroville	95966	Yuba	11
Oxnard	93030	Ventura	6
Oxnard	93033	Ventura	6
Oxnard	93035	Ventura	6
Oxnard	93036	Ventura	6

P

Pacific Grove	93950	Monterey	3
Pacific PLSDS	90272	Los Angeles	6
Pacifica	94044	San Mateo	3
Paicines	95043	Fresno	4
Paicines	95043	San Benito	4
Pala	92059	San Diego	10
Palermo	95968	Butte	11
Palm Desert	92211	Riverside	15
Palm Desert	92260	Riverside	15
Palm Springs	92262	Riverside	15
Palm Springs	92264	Riverside	15
Palmdale	93550	Los Angeles	14
Palmdale	93551	Los Angeles	14
Palmdale	93552	Los Angeles	14
Palmdale	93591	Los Angeles	14
Palo Alto	94301	Santa Clara	4
Palo Alto	94303	San Mateo	4
Palo Alto	94303	Santa Clara	4
Palo Alto	94304	Santa Clara	4
Palo Alto	94306	Santa Clara	4
Palo Cedro	96073	Shasta	11
Palos Verdes Peninsula	90274	Los Angeles	6
Paradise	95969	Butte	11
Paramount	90723	Los Angeles	8

CITY	ZIP CODE	COUNTY	CZ
Parker Dam	92267	San Bernardino	15
Parlier	93648	Fresno	13
Pasadena	91101	Los Angeles	9
Pasadena	91103	Los Angeles	9
Pasadena	91104	Los Angeles	9
Pasadena	91105	Los Angeles	9
Pasadena	91106	Los Angeles	9
Pasadena	91107	Los Angeles	16
Pasadena	91123	Los Angeles	9
Paso Robles	93446	San Luis Obispo	4
Patterson	95363	Stanislaus	12
Pauma Valley	92061	San Diego	10
Paynes Creek	96075	Tehama	11
Pearblossom	93553	Los Angeles	14
Pebble Beach	93953	Monterey	3
Penn Valley	95946	Nevada	11
Penngrove	94951	Sonoma	2
Penryn	95663	Placer	11
Perris	92570	Riverside	10
Perris	92571	Riverside	10
Pescadero	94060	San Mateo	3
Pescadero	94060	Santa Cruz	3
Petaluma	94952	Marin	2
Petaluma	94952	Sonoma	2
Petaluma	94954	Sonoma	2
Petrolia	95558	Humboldt	1
Phelan	92371	San Bernardino	14
Philo	95466	Mendocino	2
Pico Rivera	90660	Los Angeles	9
Piercy	95587	Mendocino	2
Pilot Hill	95664	El Dorado	12
Pilot Hill	95664	Placer	12
Pine Grove	95665	Amador	12
Pine Valley	91962	San Diego	14
Pinecrest	95364	Tuolumne	16
Pinole	94564	Contra Costa	3
Pinon Hills	92372	San Bernardino	14
Pioneer	95666	Amador	16
Pioneer	95666	El Dorado	16
Pismo Beach	93449	San Luis Obispo	5
Pittsburg	94565	Contra Costa	12
Pixley	93256	Tulare	13
Placentia	92870	Orange	8
Placerville	95667	El Dorado	12
Platina	96076	Shasta	11
Platina	96076	Tehama	11
Platina	96076	Trinity	11
Playa Del Ray	90293	Los Angeles	6
Pleasant Grove	95668	Placer	11
Pleasant Grove	95668	Sutter	11
Pleasant Hill	94523	Contra Costa	12
Pleasanton	94566	Alameda	12
CITY	ZIP CODE	COUNTY	CZ
Pleasanton	94588	Alameda	12
Plymouth	95669	Amador	12
Point Arena	95468	Mendocino	1
Point Reyes Station	94956	Marin	3
Pollock Pines	95726	El Dorado	16
Pomona	91766	Los Angeles	9
Pomona	91766	San Bernardino	9
Pomona	91767	Los Angeles	9
Pomona	91768	Los Angeles	9
Pope Valley	94567	Napa	2
Port Costa	94569	Contra Costa	12
Port Hueneme	93041	Ventura	6
Port Hueneme	93042	Ventura	6
Port Hueneme	93043	Ventura	6
Porter Ranch	91326	Los Angeles	9
Porterville	93257	Tulare	13
Portola	96122	Plumas	16
Portola Valley	94028	San Mateo	3
Portola Valley	94028	Santa Clara	3
Posey	93260	Tulare	16
Potrero	91963	San Diego	14
Potter Valley	95469	Lake	2
Potter Valley	95469	Mendocino	2

Poway	92064	San Diego	10
Prather	93651	Fresno	13
Princeton	95970	Colusa	11
Princeton	95970	Glenn	11
Q			
Quincy	95971	Plumas	16
R			
Rackerby	95972	Yuba	11
Raisin City	93652	Fresno	13
Ramona	92065	San Diego	10
Ranchita	92066	San Diego	14
Rancho Cordova	95670	Sacramento	12
Rancho Cordova	95742	Sacramento	12
Rancho Cucamonga	91701	San Bernardino	10
Rancho Cucamonga	91730	San Bernardino	10
Rancho Cucamonga	91737	San Bernardino	10
Rancho Cucamonga	91739	San Bernardino	10
Rancho Mirage	92270	Riverside	15
Rancho Palos Verdes	90275	Los Angeles	6
Rancho Santa Margarita	92688	Orange	8
CITY	**ZIP CODE**	**COUNTY**	**CZ**
Rancho Sante Fe	92067	San Diego	7
Rancho Sante Fe	92091	San Diego	7
Randsburg	93554	Kern	14
Ravendale	96123	Lassen	16
Raymond	93653	Madera	13
Raymond	93653	Mariposa	13
Red Bluff	96080	Tehama	11
Redcrest	95569	Humboldt	2
Redding	96001	Shasta	11
Redding	96002	Shasta	11
Redding	96003	Shasta	11
Redlands	92373	Riverside	10
Redlands	92373	San Bernardino	10
Redlands	92374	San Bernardino	10
Redondo Beach	90277	Los Angeles	6
Redondo Beach	90278	Los Angeles	6
Redway	95560	Humboldt	2
Redwood City	94061	San Mateo	3
Redwood City	94062	San Mateo	3
Redwood City	94063	San Mateo	3
Redwood City	94065	San Mateo	3
Redwood Valley	95470	Mendocino	2
Reedley	93654	Fresno	13
Reedley	93654	Tulare	13
Rescue	95672	El Dorado	12
Rialto	92376	San Bernardino	10
Rialto	92377	San Bernardino	10
Richmond	94801	Contra Costa	3
Richmond	94804	Contra Costa	3
Richmond	94805	Contra Costa	3
Ridgecrest	93555	Inyo	14
Ridgecrest	93555	Kern	14
Ridgecrest	93555	San Bernardino	14
Rio Dell	95562	Humboldt	1
Rio Linda	95673	Sacramento	12
Rio Oso	95674	Sutter	11
Rio Oso	95674	Yuba	11
Rio Vista	94571	Sacramento	12
Rio Vista	94571	Solano	12
Ripon	95366	San Joaquin	12
Riverbank	95367	Stanislaus	12
Riverdale	93656	Fresno	13
Riverdale	93656	Kings	13
Riverside	92501	Riverside	10
Riverside	92503	Riverside	10
Riverside	92504	Riverside	10
Riverside	92505	Riverside	10
Riverside	92506	Riverside	10

Riverside	92507	Riverside	10
Riverside	92508	Riverside	10
Riverside	92509	Riverside	10
Riverside	92509	San Bernardino	10
CITY	**ZIP CODE**	**COUNTY**	**CZ**
Riverside	92521	Riverside	10
Rocklin	95677	Placer	11
Rodeo	94572	Contra Costa	3
Rohnert Park	94928	Sonoma	2
Rosamond	93560	Kern	14
Rosamond	93560	Los Angeles	14
Rosemead	91770	Los Angeles	9
Roseville	95661	Placer	11
Roseville	95661	Sacramento	11
Roseville	95678	Placer	11
Roseville	95747	Placer	11
Rough and Ready	95975	Nevada	11
Rowland Heights	91748	Los Angeles	9
Rumsey	95679	Yolo	12
Running Springs	92382	San Bernardino	16

S

Sacramento	95811	Sacramento	12
Sacramento	95814	Sacramento	12
Sacramento	95815	Sacramento	12
Sacramento	95816	Sacramento	12
Sacramento	95817	Sacramento	12
Sacramento	95818	Sacramento	12
Sacramento	95819	Sacramento	12
Sacramento	95820	Sacramento	12
Sacramento	95821	Sacramento	12
Sacramento	95822	Sacramento	12
Sacramento	95823	Sacramento	12
Sacramento	95824	Sacramento	12
Sacramento	95825	Sacramento	12
Sacramento	95826	Sacramento	12
Sacramento	95827	Sacramento	12
Sacramento	95828	Sacramento	12
Sacramento	95829	Sacramento	12
Sacramento	95830	Sacramento	12
Sacramento	95831	Sacramento	12
Sacramento	95832	Sacramento	12
Sacramento	95833	Sacramento	12
Sacramento	95834	Sacramento	12
Sacramento	95835	Sacramento	12
Sacramento	95836	Sacramento	12
Sacramento	95836	Sutter	12
Sacramento	95837	Sacramento	12
Sacramento	95837	Sutter	12
Sacramento	95838	Sacramento	12
Sacramento	95841	Sacramento	12
Sacramento	95842	Sacramento	12
Sacramento	95843	Sacramento	12
Sacramento	95864	Sacramento	12
Salida	95368	Stanislaus	12
Salinas	93901	Monterey	3
Salinas	93905	Monterey	3
CITY	**ZIP CODE**	**COUNTY**	**CZ**
Salinas	93906	Monterey	3
Salinas	93907	Monterey	3
Salinas	93908	Monterey	3
Salyer	95563	Trinity	16
Samoa	95564	Humboldt	1
San Andreas	95249	Calaveras	12
San Anselmo	94960	Marin	2
San Ardo	93450	Monterey	4
San Bernardino	92401	San Bernardino	10
San Bernardino	92404	San Bernardino	16
San Bernardino	92405	San Bernardino	10
San Bernardino	92407	San Bernardino	10
San Bernardino	92408	San Bernardino	10
San Bernardino	92410	San Bernardino	10
San Bernardino	92411	San Bernardino	10
San Bruno	94066	San Mateo	3
San Carlos	94070	San Mateo	3
San Clemente	92672	Orange	6

CITY	ZIP CODE	COUNTY	CZ
San Clemente	92672	San Diego	6
San Clemente	92673	Orange	6
San Diego	92037	San Diego	7
San Diego	92101	San Diego	7
San Diego	92102	San Diego	7
San Diego	92103	San Diego	7
San Diego	92104	San Diego	7
San Diego	92105	San Diego	7
San Diego	92106	San Diego	7
San Diego	92107	San Diego	7
San Diego	92108	San Diego	7
San Diego	92109	San Diego	7
San Diego	92110	San Diego	7
San Diego	92111	San Diego	7
San Diego	92113	San Diego	7
San Diego	92114	San Diego	7
San Diego	92115	San Diego	10
San Diego	92116	San Diego	7
San Diego	92117	San Diego	7
San Diego	92119	San Diego	10
San Diego	92120	San Diego	10
San Diego	92121	San Diego	7
San Diego	92122	San Diego	7
San Diego	92123	San Diego	7
San Diego	92124	San Diego	10
San Diego	92126	San Diego	7
San Diego	92127	San Diego	10
San Diego	92128	San Diego	10
San Diego	92129	San Diego	7
San Diego	92130	San Diego	7
San Diego	92131	San Diego	10
San Diego	92133	San Diego	7
San Diego	92134	San Diego	7
San Diego	92135	San Diego	7
San Diego	92136	San Diego	7
San Diego	92139	San Diego	7
San Diego	92140	San Diego	7
San Diego	92145	San Diego	7
San Diego	92152	San Diego	7
San Diego	92154	San Diego	7
San Diego	92155	San Diego	7
San Diego	92173	San Diego	7
San Diego	92182	San Diego	7
San Dimas	91773	Los Angeles	9
San Fernando	91340	Los Angeles	9
San Fernando	91344	Los Angeles	9
San Fernando	91345	Los Angeles	9
San Fernando Valley	91352	Los Angeles	9
San Fernando Valley	91602	Los Angeles	9
San Fernando Valley	91605	Los Angeles	9
San Francisco	94102	San Francisco	3
San Francisco	94103	San Francisco	3
San Francisco	94104	San Francisco	3
San Francisco	94105	San Francisco	3
San Francisco	94107	San Francisco	3
San Francisco	94108	San Francisco	3
San Francisco	94109	San Francisco	3
San Francisco	94110	San Francisco	3
San Francisco	94111	San Francisco	3
San Francisco	94112	San Francisco	3
San Francisco	94112	San Mateo	3
San Francisco	94114	San Francisco	3
San Francisco	94115	San Francisco	3
San Francisco	94116	San Francisco	3
San Francisco	94117	San Francisco	3
San Francisco	94118	San Francisco	3
San Francisco	94121	San Francisco	3
San Francisco	94122	San Francisco	3
San Francisco	94123	San Francisco	3
San Francisco	94124	San Francisco	3
San Francisco	94127	San Francisco	3
San Francisco	94128	San Mateo	3
San Francisco	94129	San Francisco	3
San Francisco	94130	San Francisco	3
San Francisco	94131	San Francisco	3

San Francisco	94132	San Francisco	3
San Francisco	94133	San Francisco	3
San Francisco	94134	San Francisco	3
San Francisco	94134	San Mateo	3
San Francisco	94158	San Francisco	3
San Gabriel	91775	Los Angeles	9
San Gabriel	91776	Los Angeles	9
San Geronimo	94963	Marin	2
San Gregorio	94074	San Mateo	3
CITY	**ZIP CODE**	**COUNTY**	**CZ**
San Jacinto	92582	Riverside	10
San Jacinto	92583	Riverside	10
San Joaquin	93660	Fresno	13
San Jose	95002	Santa Clara	4
San Jose	95013	Santa Clara	4
San Jose	95110	Santa Clara	4
San Jose	95111	Santa Clara	4
San Jose	95112	Santa Clara	4
San Jose	95113	Santa Clara	4
San Jose	95116	Santa Clara	4
San Jose	95117	Santa Clara	4
San Jose	95118	Santa Clara	4
San Jose	95119	Santa Clara	4
San Jose	95120	Santa Clara	4
San Jose	95121	Santa Clara	4
San Jose	95122	Santa Clara	4
San Jose	95123	Santa Clara	4
San Jose	95124	Santa Clara	4
San Jose	95125	Santa Clara	4
San Jose	95126	Santa Clara	4
San Jose	95127	Santa Clara	4
San Jose	95128	Santa Clara	4
San Jose	95129	Santa Clara	4
San Jose	95130	Santa Clara	4
San Jose	95131	Santa Clara	4
San Jose	95132	Santa Clara	4
San Jose	95133	Santa Clara	4
San Jose	95134	Santa Clara	4
San Jose	95135	Santa Clara	4
San Jose	95136	Santa Clara	4
San Jose	95138	Santa Clara	4
San Jose	95139	Santa Clara	4
San Jose	95141	Santa Clara	4
San Jose	95148	Santa Clara	4
San Jose	95192	Santa Clara	4
San Juan Bautista	95045	San Benito	4
San Juan Capistrano	92675	Orange	6
San Juan Capistrano	92675	Riverside	6
San Leandro	94577	Alameda	3
San Leandro	94578	Alameda	3
San Leandro	94579	Alameda	3
San Lorenzo	94580	Alameda	3
San Luis Obispo	93401	San Luis Obispo	5
San Luis Obispo	93402	San Luis Obispo	5
San Luis Obispo	93405	San Luis Obispo	5
San Luis Obispo	93407	San Luis Obispo	5
San Marcos	92069	San Diego	10
San Marcos	92078	San Diego	10
San Marcos	92096	San Diego	10
San Marino	91108	Los Angeles	9
San Martin	95046	Santa Clara	4
CITY	**ZIP CODE**	**COUNTY**	**CZ**
San Mateo	94401	San Mateo	3
San Mateo	94402	San Mateo	3
San Mateo	94403	San Mateo	3
San Mateo	94404	San Mateo	3
San Miguel	93451	Kings	4
San Miguel	93451	Monterey	4
San Miguel	93451	San Luis Obispo	4
San Pablo	94806	Contra Costa	3
San Pedro	90731	Los Angeles	6
San Pedro	90732	Los Angeles	6
San Quentin	94964	Marin	2
San Rafael	94901	Marin	2
San Rafael	94903	Marin	2
San Ramon	94582	Contra Costa	12

CITY	ZIP CODE	COUNTY	CZ
San Ramon	94583	Alameda	12
San Ramon	94583	Contra Costa	12
San Simeon	93452	San Luis Obispo	5
Sanger	93657	Fresno	13
Santa Ana	92701	Orange	8
Santa Ana	92703	Orange	8
Santa Ana	92704	Orange	8
Santa Ana	92705	Orange	8
Santa Ana	92706	Orange	8
Santa Ana	92707	Orange	8
Santa Barbara	93101	Santa Barbara	6
Santa Barbara	93103	Santa Barbara	6
Santa Barbara	93106	Santa Barbara	6
Santa Barbara	93108	Santa Barbara	6
Santa Barbara	93109	Santa Barbara	6
Santa Barbara	93110	Santa Barbara	6
Santa Barbara	93111	Santa Barbara	6
Santa Clara	95050	Santa Clara	4
Santa Clara	95051	Santa Clara	4
Santa Clara	95053	Santa Clara	4
Santa Clara	95054	Santa Clara	4
Santa Clarita	91321	Los Angeles	9
Santa Clarita	91350	Los Angeles	9
Santa Clarita	91354	Los Angeles	9
Santa Clarita	91355	Los Angeles	9
Santa Cruz	95060	Santa Cruz	3
Santa Cruz	95062	Santa Cruz	3
Santa Cruz	95064	Santa Cruz	3
Santa Cruz	95065	Santa Cruz	3
Santa Fe Springs	90670	Los Angeles	9
Santa Margar	93453	San Luis Obispo	4
Santa Maria	93454	San Luis Obispo	5
Santa Maria	93454	Santa Barbara	5
Santa Maria	93455	Santa Barbara	5
Santa Maria	93458	San Luis Obispo	5
Santa Maria	93458	Santa Barbara	5
Santa Monica	90401	Los Angeles	6
Santa Monica	90402	Los Angeles	6
Santa Monica	90403	Los Angeles	6
Santa Monica	90404	Los Angeles	6
Santa Monica	90405	Los Angeles	6
Santa Paula	93060	Ventura	9
Santa Rosa	95401	Sonoma	2
Santa Rosa	95403	Sonoma	2
Santa Rosa	95404	Sonoma	2
Santa Rosa	95405	Sonoma	2
Santa Rosa	95407	Sonoma	2
Santa Rosa	95409	Sonoma	2
Santa Rosa	95439	Sonoma	2
Santa Ynez	93460	Santa Barbara	5
Santa Ynez Valley	93441	Santa Barbara	5
Santa Ysabel	92070	San Diego	14
Santee	92071	San Diego	10
Saratoga	95070	Santa Clara	4
Sausalito	94965	Marin	3
Scotia	95565	Humboldt	1
Scott Bar	96085	Siskiyou	16
Scotts Valley	95066	Santa Cruz	3
Sea Ranch	95497	Sonoma	1
Seal Beach	90740	Orange	6
Seal Beach	90743	Orange	6
Seaside	93955	Monterey	3
Sebastopol	95472	Sonoma	2
Seiad Valley	96086	Siskiyou	16
Selma	93662	Fresno	13
Sequoia National Park	93262	Tulare	16
Shafter	93263	Kern	13
Shandon	93461	Kern	4
Shandon	93461	San Luis Obispo	4
Shasta	96087	Shasta	11
Shasta Lake	96019	Shasta	11
Shaver Lake	93664	Fresno	16
Sheridan	95681	Placer	11
Shingle Springs	95682	El Dorado	12
Shingletown	96088	Shasta	11

Shoshone	92384	Inyo	14
Sierra City	96125	Sierra	16
Sierra Madre	91024	Los Angeles	9
Sierraville	96126	Sierra	16
Signal Hill	90755	Los Angeles	6
Silverardo	92676	Orange	8
Simi Valley	93063	Los Angeles	9
Simi Valley	93063	Ventura	9
Simi Valley	93065	Ventura	9
Skyforest	92385	San Bernardino	16
Sloughhouse	95683	Sacramento	12
Smartsville	95977	Nevada	11
Smartsville	95977	Yuba	11
Smith River	95567	Del Norte	1
Snelling	95369	Mariposa	12
CITY	**ZIP CODE**	**COUNTY**	**CZ**
Snelling	95369	Merced	12
Soda Springs	95728	Nevada	16
Soda Springs	95728	Placer	16
Solano Beach	92075	San Diego	7
Soledad	93960	Monterey	3
Solvang	93463	Santa Barbara	5
Somerset	95684	El Dorado	12
Somes Bar	95568	Siskiyou	16
Somis	93066	Ventura	9
Sonoma	95476	Napa	2
Sonoma	95476	Sonoma	2
Sonora	95370	Tuolumne	12
Soquel	95073	Santa Cruz	3
Soulsbyville	95372	Tuolumne	12
South Coastside	94021	San Mateo	3
South El Monte	91733	Los Angeles	9
South Gate	90280	Los Angeles	8
South Lake Tahoe	96150	El Dorado	16
South Pasadena	91030	Los Angeles	9
South San Francisco	94080	San Mateo	3
Spring Valley	91977	San Diego	10
Spring Valley	91978	San Diego	10
Springville	93265	Tulare	13
Squaw Valley	93675	Fresno	13
Squaw Valley	96146	Placer	16
St Helena	94574	Napa	2
St Helena	94574	Sonoma	2
Standish	96128	Lassen	16
Stanford	94305	Santa Clara	4
Stanton	90680	Orange	8
Stevenson Ranch	91381	Los Angeles	9
Stevinson	95374	Merced	12
Stewarts Point	95480	Sonoma	1
Stinson Beach	94970	Marin	3
Stockton	95202	San Joaquin	12
Stockton	95203	San Joaquin	12
Stockton	95204	San Joaquin	12
Stockton	95205	San Joaquin	12
Stockton	95206	San Joaquin	12
Stockton	95207	San Joaquin	12
Stockton	95209	San Joaquin	12
Stockton	95210	San Joaquin	12
Stockton	95211	San Joaquin	12
Stockton	95212	San Joaquin	12
Stockton	95215	San Joaquin	12
Stockton	95219	San Joaquin	12
Stonyford	95979	Colusa	11
Stratford	93266	Kings	13
Strathmore	93267	Tulare	13
Studio City	91604	Los Angeles	9
Suisun City	94585	Contra Costa	12
Suisun City	94585	Solano	12
CITY	**ZIP CODE**	**COUNTY**	**CZ**
Summerland	93067	Santa Barbara	6
Sun City	92584	Riverside	10
Sun City	92585	Riverside	10
Sun City	92586	Riverside	10
Sun City	92587	Riverside	10
Sunland	91040	Los Angeles	16
Sunnyside-Tahoe	96145	Placer	16

City			
Sunnyvale	94085	Santa Clara	4
Sunnyvale	94086	Santa Clara	4
Sunnyvale	94087	Santa Clara	4
Sunnyvale	94089	Santa Clara	4
Sunol	94586	Alameda	12
Susanville	96130	Lassen	16
Sutter	95982	Sutter	11
Sutter Creek	95685	Amador	12

T

Taft	93268	Kern	13
Tahoe Vista	96148	Placer	16
Tahoma	96142	El Dorado	16
Tahoma	96142	Placer	16
Taylorsville	95983	Plumas	16
Tecate	91980	San Diego	14
Tecopa	92389	Inyo	14
Tehachapi	93561	Kern	16
Temeluca	92590	Riverside	10
Temeluca	92591	Riverside	10
Temeluca	92592	Riverside	10
Temple City	91780	Los Angeles	9
Templeton	93465	San Luis Obispo	4
Termo	96132	Lassen	16
Terra Bella	93270	Tulare	13
Thermal	92274	Imperial	15
Thermal	92274	Riverside	15
Thousand Oaks	91320	Ventura	9
Thousand Oaks	91360	Ventura	9
Thousand Oaks	91362	Los Angeles	9
Thousand Oaks	91362	Ventura	9
Thousand Palms	92276	Riverside	15
Three Rivers	93271	Tulare	13
Tipton	93272	Tulare	13
Tollhouse	93667	Fresno	13
Toluca Ter	91601	Los Angeles	9
Tomales	94971	Marin	3
Topanga	90290	Los Angeles	6
Topaz	96133	Mono	16
Torrance	90501	Los Angeles	6
Torrance	90502	Los Angeles	6
Torrance	90503	Los Angeles	6
Torrance	90504	Los Angeles	8
Torrance	90505	Los Angeles	6
CITY	**ZIP CODE**	**COUNTY**	**CZ**
Torrance	90506	Los Angeles	8
Tracy	95304	San Joaquin	12
Tracy	95376	San Joaquin	12
Tracy	95377	Alameda	12
Tracy	95377	San Joaquin	12
Tracy	95391	Alameda	12
Tracy	95391	San Joaquin	12
Tranquility	93668	Fresno	13
Trinidad	95570	Humboldt	1
Trinity Center	96091	Trinity	16
Trona	93562	San Bernardino	14
Truckee	96161	Nevada	16
Truckee	96161	Placer	16
Truckee	96162	Nevada	16
Truckee	96162	Placer	16
Tujunga	91042	Los Angeles	16
Tulare	93274	Tulare	13
Tulelake	96134	Modoc	16
Tulelake	96134	Siskiyou	16
Tuolumne	95379	Tuolumne	12
Tupman	93276	Kern	13
Turlock	95380	Merced	12
Turlock	95380	Stanislaus	12
Turlock	95382	Stanislaus	12
Tustin	92780	Orange	8
Tustin	92782	Orange	8
Twain	95984	Plumas	16
Twain Harte	95383	Tuolumne	16
Twentynine Palms	92277	San Bernardino	14
Twentynine	92278	San Bernardino	14

Palms			
Twin Bridges	95735	El Dorado	16

U

Ukiah	95482	Mendocino	2
Union City	94587	Alameda	3
Universal City	91608	Los Angeles	9
Upland	91784	San Bernardino	10
Upland	91786	Los Angeles	10
Upland	91786	San Bernardino	10
Upper Lake	95485	Lake	2
Upper Lake	95493	Lake	2
Upper Lake-Clearlake Oaks	95443	Lake	2

V

Vacaville	95687	Solano	12
Vacaville	95688	Napa	12
Vacaville	95688	Solano	12
Vallecito	95251	Calaveras	12
CITY	**ZIP CODE**	**COUNTY**	**CZ**
Vallejo	94589	Solano	2
Vallejo	94590	Solano	3
Vallejo	94591	Solano	12
Vallejo	94592	Solano	3
Valley Center	92082	San Diego	10
Valley Ford	94972	Sonoma	1
Valley Springs	95252	Calaveras	12
Valley Village	91607	Los Angeles	9
Valyermo	93563	Los Angeles	16
Venice	90291	Los Angeles	6
Ventura	93001	Ventura	6
Ventura	93003	Ventura	6
Ventura	93004	Ventura	6
Vernalis	95385	San Joaquin	12
Vernalis	95385	Stanislaus	12
Victorville	92392	San Bernardino	14
Victorville	92394	San Bernardino	14
Victorville	92395	San Bernardino	14
Vidal	92280	San Bernardino	15
Villa Park	92861	Orange	8
Vinton	96135	Plumas	16
Visalia	93277	Tulare	13
Visalia	93291	Tulare	13
Visalia	93292	Tulare	13
Vista	92081	San Diego	~~10~~7
Vista	92083	San Diego	~~10~~7
Vista	92084	San Diego	10
Volcano	95689	Amador	12

W

Walnut	91789	Los Angeles	9
Walnut Creek	94595	Contra Costa	12
Walnut Creek	94596	Contra Costa	12
Walnut Creek	94597	Contra Costa	12
Walnut Creek	94598	Contra Costa	12
Walnut Grove	95690	Sacramento	12
Walnut Grove	95690	San Joaquin	12
Walnut Grove	95690	Solano	12
Warner Springs	92086	San Diego	14
Wasco	93280	Kern	13
Waterford	95386	Stanislaus	12
Watsonville	95076	Monterey	3
Watsonville	95076	Santa Clara	3
Watsonville	95076	Santa Cruz	3
Weaverville	96093	Trinity	16
Weed	96094	Siskiyou	16
Weldon	93283	Kern	16
Wendel	96136	Lassen	16
West Covina	91790	Los Angeles	9
West Covina	91791	Los Angeles	9
West Covina	91792	Los Angeles	9
West Hills	91304	Los Angeles	9
CITY	**ZIP CODE**	**COUNTY**	**CZ**

West Hills	91304	Ventura	9
West Hills	91307	Los Angeles	9
West Hills	91307	Ventura	9
West Hollywood	90069	Los Angeles	9
West Point	95255	Amador	12
West Point	95255	Calaveras	12
West Sacramento	95605	Yolo	12
West Sacramento	95691	Yolo	12
Westlake Village	91361	Los Angeles	9
Westlake Village	91361	Ventura	9
Westminster	92683	Orange	6
Westmorland	92281	Imperial	15
Westwood	96137	Lassen	16
Westwood	96137	Plumas	16
Wheatland	95692	Yuba	11
White Water	92282	Riverside	15
Whitethorn	95589	Humboldt	1
Whitethorn	95589	Mendocino	1
Whitmore	96096	Shasta	11
Whittier	90601	Los Angeles	9
Whittier	90602	Los Angeles	9
Whittier	90603	Los Angeles	9
Whittier	90604	Los Angeles	9
Whittier	90605	Los Angeles	9
Whittier	90606	Los Angeles	9
Wildomar	92595	Riverside	10
Williams	95987	Colusa	11
Willits	95490	Mendocino	2
Willow Creek	95573	Humboldt	2
Willows	95988	Glenn	11
Wilmington	90744	Los Angeles	6
Wilseyville	95257	Calaveras	12
Wilton	95693	Sacramento	12
Winchester	92596	Riverside	10
Windsor	95492	Sonoma	2
Winterhaven	92283	Imperial	15
Winters	95694	Solano	12
Winters	95694	Yolo	12
Winton	95388	Merced	12
Wishon	93669	Madera	16
Wofford Heights	93285	Kern	16
Woodbridge	95258	San Joaquin	12
Woodcare	94973	Marin	2
Woodlake	93286	Tulare	13
Woodland	95695	Yolo	12
Woodland	95776	Yolo	12
Woodland Hills	91303	Los Angeles	9
Woodland Hills	91364	Los Angeles	9
Woodland Hills	91367	Los Angeles	9
Woodland Hills	91371	Los Angeles	9
Woody	93287	Kern	13
Wrightwood	92397	San Bernardino	16

CITY	ZIP CODE	COUNTY	CZ
Y			
Yorba Linda	92886	Orange	8
Yorba Linda	92887	Orange	8
Yorkville	95494	Mendocino	2
Yosemite National Park	95389	Mariposa	16
Yosemite National Park	95389	Tuolumne	16
Yountville	94599	Napa	2
Yreka	96097	Siskiyou	16
Yuba City	95991	Sutter	11
Yuba City	95993	Sutter	11
Yucaipa	92399	Riverside	10
Yucaipa	92399	San Bernardino	10
Yucca Valley	92284	San Bernardino	14
Z			
Zamora	95698	Yolo	12
Zenia	95595	Trinity	2

JA2.2 California Design Location Data

The data contained in the following table was obtained through a joint effort by the Southern California Chapter and the Golden Gate Chapter of ASHRAE. It is reprinted here with the written permission of Southern California Chapter ASHRAE, Inc. The values for 1.0 percent drybulb and 1.0 percent mean coincident wetbulb (MCWB) are interpolated.[1]

The data in Table 2-3 is developed from A full listing of design location data for California is contained in the ASHRAE publication *SPCDX, Climate Data for Region X, Arizona, California, Hawaii, and Nevada* (ISBN 200021, May 1982) and *Supplement to Climatic Data for Region X, Arizona, California, Hawaii, Nevada* (ISBN 20002956, November 1994). The publication may be ordered from:

Order Desk
Building News
10801 National Blvd.
Los Angeles, CA 90064
(888) 264-7483 or (310) 474-7771
http://www.bnibooks.com

1 The interpolation formula is 2.0%value + 0.6667 (0.5%Value – 2.0% value + 0.5).

Table 2-3 – Design Day Data for California Cities

					Cooling												Heating		
					0.10%		0.50%		1.00%		2.00%								
City	Climate Zone	Latitude	Elevation (ft)	Longitude	DB	MCWB	DB	MCWB	DB	MCWB	DB	MCWB	Design Wetbulb 0.1%	Design Wetbulb 0.5%	Outdoor Daily Range	Winter Median of Extremes	Design Drybulb (0.2%)	Design Drybulb (0.6%)	HDD*
Adelanto	14	34.6	2865	117.4	105	67	101	65	100	64	97	62	70	68	39	14	24	27	1654
Adin RS	16	41.2	4195	121	96	61	92	60	91	60	88	59	65	63	43	-7	-2	4	
Agoura Hills	9	34.2	700	118.8	103	70	96	68	94	68	90	66	73	71	29	27	31	34	
Alameda NAS	3	37.8	15	122.3	88	65	82	64	80	64	76	62	66	64	21	35	38	40	2507
Alamo	12	37.9	410	122.9	102	69	97	68	96	68	92	66	72	70	30	23	28	31	
Albany	3	37.9	40	122.3	88	65	83	64	81	64	77	62	66	64	16	30	35	38	
Alderpoint	2	40.2	460	123.6	100	69	95	67	94	67	90	65	70	68	39	21	27	30	3424
Alhambra	9	34	483	118.1	100	71	96	70	94	70	90	68	73	71	25	30	35	37	
Aliso Viejo	6	33.6	50	117.7	91	69	83	68	81	68	76	66	71	69	18	30	33	36	
Almaden AFS	4	37.2	3470	121.9	95	62	90	60	89	60	85	59	64	62	20	20	25	29	4468
Alondra Park	8	33.9	50	118.3	91	69	86	68	85	68	81	66	71	69	17	35	40	42	
Alpine	10	32.8	1735	116.8	99	69	95	68	94	68	91	67	72	70	35	27	32	35	
Alta Sierra	16	35.7	6500	118.6	87	62	84	61	83	61	80	59	65	63	32	-4	1	8	2428
Altadena	9	34.2	1200	118.1	99	68	94	67	92	67	88	66	72	70	31	32	37	39	1920
Alturas RS	16	41.5	4400	120.6	99	62	96	61	95	61	91	59	65	63	43	-10	-4	0	6895
Alum Rock	4	37.4	70	121.8	95	68	90	66	88	66	84	64	70	68	22	28	33	36	
American Canyon	2	37.6	85	122.3	93	67	90	66	88	66	84	64	70	68	23	28	33	36	
Anaheim	8	33.8	158	117.9	99	69	92	68	90	68	85	67	73	71	26	32	37	39	
Anderson	11	40.5	430	122.3	107	71	103	70	101	70	97	68	72	70	30	26	31	34	
Angwin	2	38.6	1815	122.4	98	66	93	64	92	64	88	62	69	66	33	25	30	33	
Antioch	12	38	60	121.8	102	70	97	68	95	68	91	66	70	69	34	22	28	31	2627

City	Climate Zone	Latitude	Elevation (ft)	Longitude	Cooling 0.10% DB	Cooling 0.10% MCWB	Cooling 0.50% DB	Cooling 0.50% MCWB	Cooling 1.00% DB	Cooling 1.00% MCWB	Cooling 2.00% DB	Cooling 2.00% MCWB	Design Wetbulb 0.1%	Design Wetbulb 0.5%	Outdoor Daily Range	Winter Median of Extremes	Heating Design Drybulb (0.2%)	Heating Design Drybulb (0.6%)	HDD*
Apple Valley	14	34.5	2935	117.2	105	66	101	65	100	65	97	64	70	68	38	14	21	25	
Aptos	3	37	500	121.9	94	67	88	66	87	65	83	63	69	67	30	27	32	35	
Arcadia	9	34.2	475	118	100	69	96	68	95	68	91	67	73	71	30	31	36	38	
Arcata	1	41	218	124.1	75	61	69	59	68	59	65	58	61	60	11	28	31	33	5029
Arden	12	38.5	80	121.4	104	70	100	69	98	69	94	67	73	71	35	28	33	35	
Arroyo Grande	5	35.1	105	120.6	92	66	86	64	84	64	79	62	67	65	18	28	32	35	
Artesia	8	33.8	50	118.1	99	71	91	70	89	70	85	68	73	71	23	33	37	40	
Arvin	13	35.2	445	118.8	106	71	102	69	101	69	98	68	74	72	30	26	29	32	
Ash Mtn	13	36.5	1708	118.8	105	69	101	68	100	68	97	66	72	70	30	25	31	33	2703
Ashland	3	37.7	45	122.1	92	66	86	65	85	64	81	62	68	66	24	26	31	34	977
Atascadero	4	35.5	837	120.7	94	66	89	67	88	67	84	65	70	68	42	25	29	32	
Atherton	3	37.5	50	122.2	90	66	84	64	82	64	78	62	68	66	27	23	29	33	
Atwater	12	37.3	150	120.6	102	72	99	70	98	69	94	67	74	72	38	24	30	34	
Auberry	16	37.1	2140	119.5	102	69	98	67	97	66	95	64	71	69	36	21	27	30	3313
Auburn	11	38.9	1292	121.1	103	69	100	67	99	67	95	66	72	69	33	25	30	33	3089
Avalon	6	33.4	25	118.3	83	64	75	62	73	62	69	60	68	66	11	37	41	44	2204
Avenal	13	36	550	120.1	103	70	98	70	97	70	93	69	73	72	34	23	28	31	
Avocado Heights	9	34.2	550	118	101	69	97	68	95	68	91	68	74	72	30	28	32	35	741
Azusa	9	34.1	605	118.2	101	70	97	69	95	69	91	68	74	72	36	31	36	38	
Baker	14	35.3	940	116.1	115	73	112	72	111	72	108	70	77	75	29	23	28	31	
Bakersfield AP	13	35.4	475	119.1	106	71	102	70	101	70	98	68	74	72	34	26	31	35	2185
Balch PH	14	36.9	1720	116.0	100	67	97	66	96	66	93	64	71	69	26	26	31	34	
Baldwin Park	9	34	394	118	100	69	96	69	94	69	90	68	73	72	32	31	36	38	
Banning	15	33.9	2349	116.9	104	69	100	68	99	68	96	67	73	71	34	20	26	30	

City	Climate Zone	Latitude	Elevation (ft)	Longitude	Cooling 0.10% DB	Cooling 0.10% MCWB	Cooling 0.50% DB	Cooling 0.50% MCWB	Cooling 1.00% DB	Cooling 1.00% MCWB	Cooling 2.00% DB	Cooling 2.00% MCWB	Design Wetbulb 0.1%	Design Wetbulb 0.5%	Outdoor Daily Range	Heating Winter Median of Extremes	Heating Design Drybulb (0.2%)	Heating Design Drybulb (0.6%)	HDD*
Barrett Dam	10	32.7	1623	116.7	103	69	97	68	96	68	92	67	73	71	35	22	26	28	2656
Barstow	14	34.9	2162	117	107	69	104	69	103	69	100	67	74	72	35	16	23	27	2580
Baywood-Los Osos	5	35.3	100		88	65	82	64	80	64	76	62	67	65	14	31	36	38	
Beale AFB	11	39.1	113	121.4	105	71	102	70	101	70	97	68	74	72	34	25	28	30	2835
Beaumont	10	33.9	2605	117	103	68	99	67	98	67	95	66	72	70	38	22	27	30	2628
Bell	8	33.9	143	118.2	97	70	91	69	89	69	85	67	72	70	22	33	38	41	
Bell Gardens	8	33.9	160	118.2	97	70	91	69	87	67	85	67	72	70	22	32	37	40	
Bellflower	8	33.8	73	118.1	98	70	91	69	89	69	85	67	72	70	21	32	37	40	
Belmont	3	37.5	33	122.3	90	66	84	64	82	64	78	62	68	66	24	29	34	36	
Ben Lomond	3	37.1	450	122.1	92	67	85	66	83	65	79	63	69	67	30	25	30	33	
Benicia	12	38.1	55	122.1	99	69	93	67	91	67	87	65	70	68	30	28	33	36	
Berkeley	3	37.9	345	122.3	90	64	83	63	81	63	76	61	66	64	16	33	37	40	2950
Berryessa Lake	2	38.6	480	122.1	102	70	98	69	96	69	92	67	72	70	35	26	31	34	
Beverly Hills	9	34.1	268	118.2	94	69	88	68	87	68	83	66	71	69	20	39	43	46	
Big Bar RS	16	40.8	1260	121.8	102	68	98	67	97	67	93	65	70	68	46	19	25	28	
Big Bear Lake	16	34.2	6745	116.9	87	59	83	58	82	58	79	56	64	62	32	-3	3	7	6850
Bishop AP	16	37.4	4108	118.4	103	61	100	60	99	60	97	58	65	63	40	5	12	16	4313
Blackhawk	12	37.7	10	121.9	88	65	82	64	80	64	76	62	66	64	21	35	38	40	977
Blackwells Corner	13	35.6	644	119.9	99	68	94	66	93	66	89	65	71	69	31	23	28	32	
Bloomington	10	34	980	117.4	106	71	102	70	101	70	98	69	75	73	34	30	35	38	
Blue Canyon AP	16	39.3	5280	120.7	88	60	85	59	84	59	81	57	64	62	20	13	20	24	5704
Blythe AP	15	33.6	395	114.7	115	74	112	73	111	73	108	71	80	78	27	28	33	36	1219
Blythe CO	15	33.6	268	114.6	115	74	112	73	111	73	108	71	80	78	27	24	29	32	1312
Boca	16	39.4	5575	120.1	92	58	89	57	88	57	84	55	62	60	46	-18	-13	-10	8340

City	Climate Zone	Latitude	Elevation (ft)	Longitude	Cooling 0.10% DB	Cooling 0.10% MCWB	Cooling 0.50% DB	Cooling 0.50% MCWB	Cooling 1.00% DB	Cooling 1.00% MCWB	Cooling 2.00% DB	Cooling 2.00% MCWB	Design Wetbulb 0.1%	Design Wetbulb 0.5%	Outdoor Daily Range	Winter Median of Extremes	Heating Design Drybulb (0.2%)	Heating Design Drybulb (0.6%)	HDD*
Bodie	16	38.2	8370	119	83	50	80	49	79	49	76	48	55	53	42	-21	-16	-13	
Bonadella Ranchos – Madera Rancho	13	36.8	270	119.9	105	72	101	70	100	70	96	68	74	72	40		29	32	1273
Bonita	7	32.7	105	117	91	69	82	67	81	66	78	64	70	68	20	28	32	44	1864
Boron AFS	14	35.1	3015	117.6	106	70	103	69	102	69	98	68	73	71	35	18	23	26	3000
Borrego Desert PK	15	33.2	805	116.4	112	76	107	74	105	74	101	72	79	77	36	25	30	33	
Bostonia	10	32.8	600	116.9	96	70	91	69	88	69	81	67	72	70	30	29	34	36	
Boulder Creek	3	37.2	493	122.1	92	67	85	65	83	65	79	63	69	67	30	25	30	33	1120
Bowman Dam	16	39.4	5347	120.7	89	59	86	57	85	57	82	55	63	60	26	9	17	22	5964
Boyes Hot Sprgs	2	38.2	300	122.5	100	70	95	69	93	69	89	67	72	70	40	22	28	31	1289
Brannan Island	12	38.1	30	121.7	100	69	95	68	93	68	89	67	72	70	10	24	28	31	
Brawley 2 SW	15	33	-100	115.6	113	74	110	73	109	73	105	73	81	79	32	25	30	33	1204
Brea Dam	8	33.9	275	117.9	100	69	94	68	92	68	86	66	73	71	29	30	34	37	
Brentwood	12	37.9	71	121.7	102	70	97	68	95	67	89	65	71	68	34	27	32	35	
Bridgeport	16	38.2	6470	119.2	89	56	86	54	85	54	82	53	60	57	41	-20	-15	-12	
Broderick-Bryte	12	38.6	20	121.5	104	71	100	69	98	69	94	67	72	71	36	25	31	35	
Brooks Ranch	12	38.8	294	122.2	104	71	99	70	97	70	93	68	73	71	35	19	25	28	2968
Buena Park	8	33.9	75	118	98	69	92	68	90	68	85	67	72	70	25	31	35	38	
Burbank AP	9	34.2	699	118.4	101	70	96	68	94	68	90	67	72	70	28	29	34	36	1701
Burbank Vly Pump	9	34.2	655	118.4	101	69	96	68	94	68	90	66	72	70	28	29	34	36	1678
Burlingame	3	37.6	10	122.4	88	67	82	64	80	64	76	63	68	65	20	30	35	37	
Burney	16	40.9	3127	121.7	95	64	92	63	91	63	88	61	67	65	42	0	5	12	6404
Butler Valley (Korbel)	1	40.7	420	123.9	91	66	86	64	85	64	81	62	67	65	22	20	26	29	
Buttonwillow	13	35.4	269	119.5	103	71	99	70	98	70	95	68	74	72	36	20	26	29	2621

					Cooling												Heating		
					0.10%		0.50%		1.00%		2.00%								
City	Climate Zone	Latitude	Elevation (ft)	Longitude	DB	MCWB	DB	MCWB	DB	MCWB	DB	MCWB	Design Wetbulb 0.1%	Design Wetbulb 0.5%	Outdoor Daily Range	Winter Median of Extremes	Design Drybulb (0.2%)	Design Drybulb (0.6%)	HDD*
Cabrillo NM	7	32.7	410	117.2	89	69	84	68	83	68	80	67	71	69	12	39	43	45	
Cachuma Lake	5	34.6	781	120	97	69	92	67	91	67	87	65	70	68	19	26	31	34	
Calabasas	9	34.2	1100	118.6	102	71	98	70	97	70	93	69	73	71	26	26	30	33	2348
Calaveras Big Trees	16	38.3	4696	120.3	92	61	88	60	87	60	84	58	64	62	33	11	18	23	5848
Calexico	15	32.7	12	115.5	114	74	110	73	109	73	106	71	81	79	28	26	31	34	
California City	14	35.1	2400	118	107	69	104	68	103	68	99	66	72	70	33	10	17	22	2572
Callahan	16	41.3	3185	122.8	97	63	93	62	92	62	88	60	66	64	35	7	15	20	
Calwa	13	36.8	330	119.8	105	73	101	71	100	70	97	68	75	73	34	23	27	29	
Camarillo	6	34.2	147	119.2	91	69	84	68	82	68	78	67	71	69	22	28	32	35	
Cambria AFS	5	35.5	690	121.1	78	62	72	61	70	61	66	59	64	62	16	30	35	38	3646
Cameron Park	12	38.6	1800	121	101	67	98	66	97	66	93	65	70	68	42	20	26	29	2235
Camp Pardee	12	38.2	658	120.9	106	71	103	70	102	70	98	69	74	72	36	27	32	35	2812
Camp Pendleton	7	33.4	50	117.4	88	69	85	68	84	68	80	67	71	69	12	34	38	40	
Camp Roberts	4	35.8	765	120.8	106	72	101	71	99	71	95	69	74	72	45	16	24	27	2890
Campbell	4	37.3	195	121.8	93	69	88	66	87	66	83	65	71	68	30	28	33	36	
Campo	14	32.6	2630	116.5	101	67	95	66	94	66	90	66	71	69	41	16	23	27	3303
Canoga Park	9	34.2	790	118.6	104	71	99	70	97	70	93	69	74	72	38	25	30	33	1884
Cantil	14	35.3	2010	118	111	71	107	71	106	71	103	70	74	73	32	12	19	24	
Canyon Dam	16	40.1	4555	121.1	93	60	90	59	89	59	85	57	64	62	39	1	6	13	6834
Canyon Lake	10	33.8	1500	117.3	105	70	101	69	100	69	97	68	74	72	39	22	27	30	
Capitola	3	37	64	122	94	67	88	66	86	65	81	63	69	67	24	27	32	35	
Cardiff-by-the-Sea	7	33	80	117.3	87	68	83	67	81	67	77	65	70	68	12	35	39	41	
Carlsbad	7	33.2	44	117.4	87	68	83	67	81	67	77	65	70	68	10	34	38	40	
Carmel Valley	3	36.5	425	121.7	94	68	88	66	86	66	80	65	69	67	20	25	30	33	

City	Climate Zone	Latitude	Elevation (ft)	Longitude	Cooling 0.10% DB	Cooling 0.10% MCWB	Cooling 0.50% DB	Cooling 0.50% MCWB	Cooling 1.00% DB	Cooling 1.00% MCWB	Cooling 2.00% DB	Cooling 2.00% MCWB	Design Wetbulb 0.1%	Design Wetbulb 0.5%	Outdoor Daily Range	Winter Median of Extremes	Heating Design Drybulb (0.2%)	Heating Design Drybulb (0.6%)	HDD*
Carmel-by-the-Sea	3	36.5	20	121.9	87	65	78	62	76	62	71	61	66	63	20	30	35	38	968
Carmichael	12	38.6	100	121.5	104	70	100	69	98	69	94	68	73	71	35	25	35	37	1290
Carpinteria	6	34.4	385	119.5	90	69	83	67	81	67	77	65	70	68	15	30	34	37	
Carson	6	33.8	60	118.3	96	69	88	68	86	68	82	66	71	69	19	33	38	40	
Casa de Oro-Mount Helix	10	32.7	530	117.0	96	71	88	69	87	69	84	67	72	70	19	34	38	41	404
Castle AFB	12	37.4	188	120.6	105	71	101	70	100	70	96	69	73	71	33	24	28	31	2590
Castro Valley	3	37.6	177	122.2	93	67	87	67	85	67	80	65	69	68	25	24	29	32	
Castroville	3	36.8	20	121.8	86	66	77	63	75	63	70	61	67	64	18	32	37	40	1151
Cathedral City	15	33.8	400	116.5	117	74	113	73	112	73	109	72	79	78	33	26	31	34	374
Catheys Valley	12	37.4	1000	120.1	102	69	99	68	98	68	94	67	72	70	38	21	27	30	
Cecilville	16	41.1	3000	123.1	95	63	89	62	88	61	84	59	65	63	44	13	20	24	
Cedarville	16	41.5	4670	120.2	97	61	94	60	93	60	89	58	65	63	35	1	6	13	6304
Centerville PH	11	39.8	522	121.7	105	70	100	68	99	68	96	67	72	70	40	25	30	33	2895
Ceres	12	37.6	90	121	101	72	96	70	94	69	90	67	74	72	36	24	30	34	
Cerritos	8	33.9	34	118.1	99	71	92	69	90	69	85	68	73	71	23	33	38	40	
Charter Oak	9	34.1	600	117.9	101	70	97	69	95	69	91	68	74	72	34	29	34	36	
Chatsworth	9	34.2	964	118.6	98	69	93	68	91	68	87	66	72	70	38	26	31	34	664
Cherry Valley Dam	16	38	4765	119.9	96	62	92	61	91	61	88	59	65	63	32	9	16	21	
Cherryland	3	37.5	100	122.1	93	67	86	66	84	66	79	64	69	67	24	26	31	37	
Chester	16	40.3	4525	121.2	94	62	91	61	90	61	86	59	65	63	33	-3	2	8	
Chico Exp Sta	11	39.7	205	121.8	105	70	102	69	100	69	96	68	72	71	37	22	27	30	2878
China Lake	14	35.7	2220	117.7	112	70	108	68	107	68	104	68	74	72	33	15	22	25	2560
Chino	10	34	714	117.7	104	70	100	69	98	69	94	68	74	72	35	27	32	35	

					Cooling												Heating		
					0.10%		0.50%		1.00%		2.00%								
City	Climate Zone	Latitude	Elevation (ft)	Longitude	DB	MCWB	DB	MCWB	DB	MCWB	DB	MCWB	Design Wetbulb 0.1%	Design Wetbulb 0.5%	Outdoor Daily Range	Winter Median of Extremes	Design Drybulb (0.2%)	Design Drybulb (0.6%)	HDD*
Chino Hills	10	34.1	800	117.7	104	70	100	69	98	69	94	68	74	72	35	27	32	35	800
Chowchilla	13	37	200	120.3	104	72	101	70	100	70	96	68	74	72	38	22	28	31	1250
Chula Vista	7	32.6	9	117.1	90	70	84	68	83	68	79	66	71	69	9	33	38	40	2072
Citrus Heights	12	38.7	138	121.5	104	71	100	70	98	70	94	68	74	72	36	24	26	29	
Claremont	9	34.1	1201	117.8	101	69	97	68	95	68	91	66	73	71	34	29	34	36	2049
Clarksburg	12	38.4	14	121.5	102	70	97	69	95	69	91	67	72	70	35	24	29	32	2971
Clayton	12	38	60	121.9	102	70	97	68	95	67	89	65	71	68	34	27	32	35	
Clearlake Highlands	2	39	1360	122.7	101	69	97	68	95	67	89	65	71	69	36	15	22	26	
Cloverdale	2	38.8	320	123	102	70	97	69	95	68	89	66	72	70	37	26	31	34	2763
Clovis	13	36.8	404	119.7	105	72	102	70	101	70	98	68	74	72	36	22	28	32	
Coachella	15	33.7	-76	116.2	114	74	110	73	109	73	106	73	80	79	28	25	30	34	
Coalinga	13	36.2	671	120.4	103	70	98	70	97	70	93	69	73	72	34	23	28	31	2592
Colfax	11	39.1	2418	121	100	66	97	65	96	65	92	63	69	67	29	22	28	31	3424
Colton	10	34.1	978	117.3	105	70	102	68	101	68	97	67	74	72	35	28	33	36	
Colusa	11	39.2	60	122	103	72	100	70	98	70	94	68	74	71	36	23	29	31	2793
Commerce	8	33.9	175	118.2	98	69	92	68	90	68	86	67	72	70	23	33	37	39	
Compton	8	33.9	71	118.2	97	69	90	68	88	68	83	67	72	70	21	33	37	39	1606
Concord	12	38	195	112	102	70	97	68	95	67	89	65	71	68	34	27	32	35	3035
Corcoran	13	36.1	200	119.7	106	72	102	71	101	71	98	70	74	73	36	22	28	31	2666
Corning	11	39.9	487	122.2	106	71	103	70	102	69	98	67	73	71	33	23	28	31	1330
Corona	10	33.9	710	117.6	104	70	100	69	98	69	92	67	74	72	35	26	31	34	1794
Coronado	7	32.7	20	117.2	89	69	82	67	80	67	76	65	70	68	10	36	39	41	1500
Corte Madera	3	37.9	55	122.5	97	68	91	66	89	66	84	64	69	68	34	28	33	35	
Costa Mesa	6	33.7	100	117.9	88	68	81	66	79	66	73	65	70	68	16	31	36	38	1482

City	Climate Zone	Latitude	Elevation (ft)	Longitude	Cooling 0.10% DB	Cooling 0.10% MCWB	Cooling 0.50% DB	Cooling 0.50% MCWB	Cooling 1.00% DB	Cooling 1.00% MCWB	Cooling 2.00% DB	Cooling 2.00% MCWB	Design Wetbulb 0.1%	Design Wetbulb 0.5%	Outdoor Daily Range	Winter Median of Extremes	Heating Design Drybulb (0.2%)	Heating Design Drybulb (0.6%)	HDD*
Cotati	2	38.3	100	122.7	99	69	94	68	93	68	89	66	71	69	32	24	28	30	1205
Country Club	12	37.8	600	121.3	102	69	97	68	96	68	92	66	72	70	30	68	28	31	977
Covelo	2	39.8	1385	123.3	99	67	93	65	91	65	87	63	69	67	43	15	22	26	4179
Covina	9	34.1	575	117.9	101	70	97	69	95	69	91	68	74	72	34	29	34	36	
Crescent City	1	41.8	40	124.2	75	61	69	59	68	59	65	58	61	60	18	28	33	36	4445
Crestline	16	34.2	4900	117.3	90	62	86	61	85	61	81	59	66	64	26	13	20	24	3200
Crockett	12	38	9	122.2	96	68	90	66	89	66	85	64	70	67	23	28	33	36	
Crows Landing	12	37.4	140	121.1	101	70	96	68	94	68	89	66	72	70	33	23	28	31	2767
Cucamonga	10	34.1	1450	117.6	103	69	99	68	97	67	93	65	73	71	31	29	34	36	
Cudahy	8	33.9	130	118.2	98	70	91	69	89	69	85	67	72	70	21	33	37	39	
Culver City	8	34	106	118.4	96	70	88	69	87	69	83	67	72	70	18	35	40	42	1515
Cupertino	4	37.3	70	122	96	68	88	67	86	66	80	64	70	68	30	28	33	36	
Cuyama	4	34.9	2255	116.6	99	68	96	67	94	67	89	66	72	70	42	13	20	24	
Cuyamaca	14	33	4650	116.6	92	64	85	62	84	61	81	59	67	65	29	11	18	23	4848
Cypress	8	33.8	75	118	98	70	92	69	90	69	85	67	72	70	24	31	35	38	
Daggett AP	14	34.9	1915	116.8	109	68	106	68	105	68	102	66	73	72	33	21	26	29	2203
Daly City	3	37.6	410	122.5	84	65	78	62	77	62	73	61	66	63	16	34	37	39	
Dana Point	6	33.5	100	117.7	91	69	84	68	82	68	78	66	71	69	13	30	33	36	600
Danville	12	37.8	368	122	102	69	97	68	96	68	92	66	72	70	30	23	28	31	977
Davis	12	38.5	60	121.8	103	72	99	70	97	70	93	68	74	71	41	24	30	34	2844
De Sabla	11	39.9	2713	121.6	97	66	94	64	92	64	88	62	68	66	35	18	24	27	4237
Death Valley	14	36.5	-194	116.9	121	77	118	76	117	76	114	74	81	79	28	27	33	37	1147
Deep Springs Clg	16	37.5	5225	118	98	60	95	59	94	59	92	58	64	62	35	-3	2	8	
Deer Creek PH	11	39.3	4455	120.9	93	61	91	60	90	60	87	58	65	63	39	10	17	22	5863

					Cooling												Heating		
					0.10%		0.50%		1.00%		2.00%								
City	Climate Zone	Latitude	Elevation (ft)	Longitude	DB	MCWB	DB	MCWB	DB	MCWB	DB	MCWB	Design Wetbulb 0.1%	Design Wetbulb 0.5%	Outdoor Daily Range	Winter Median of Extremes	Design Drybulb (0.2%)	Design Drybulb (0.6%)	HDD*
Del Aire	6	34	100	118.4	91	69	84	67	83	67	79	66	71	69	15	37	40	42	383
Delano	13	35.8	323	119.3	106	71	102	70	101	70	98	69	74	72	36	22	25	28	
Denair	12	37.6	137	120.8	100	70	95	69	93	69	89	67	72	70	38	22	28	31	2974
Desert Hot Springs	15	34	1060	116.5	115	73	111	72	110	72	107	71	78	77	35	24	29	32	400
Diamond Bar	9	34	880	117.8	101	69	97	68	96	68	92	66	73	71	33	28	33	35	
Dinuba	13	36.5	340	119.4	104	73	101	70	100	70	96	69	75	73	36	24	30	34	
Discovery Bay	12	38.1	10	121.6	102	70	97	68	95	67	89	65	71	68	34	27	32	35	
Dixon	12	38.4	100	121.9	104	72	99	70	97	70	93	68	74	71	36	24	30	33	2826
Dobbins	11	39.4	1640	121.2	104	70	101	68	100	68	96	67	72	70	31	24	29	32	
Donner Mem Stt Pk	16	39.3	5937	120.3	85	56	82	56	81	56	77	54	60	58	40	-3	3	6	
Donner Summit	16	39.4	7239	120.3	80	53	77	53	76	52	72	50	57	55	40	-8	-1	3	8290
Downey	8	33.9	110	118	98	71	90	70	88	70	84	68	73	71	21	32	37	39	
Downieville RS	16	39.6	2895	120.8	98	64	95	63	94	63	90	61	68	66	42	13	20	24	
Doyle	16	40	4390	120.1	96	63	93	62	92	61	88	59	66	64	42	0	5	12	
Dry Canyon Res	16	34.5	1455	118.5	105	71	100	69	99	69	96	68	74	72	32	24	29	32	
Duarte	9	34.1	500	118	100	69	96	68	94	68	90	67	73	71	33	31	36	38	
Dublin	12	37.7	200	121.5	99	69	93	67	91	67	86	65	70	68	35	24	29	32	
Dudleys	12	37.7	3000	120.1	97	65	94	64	93	64	90	62	68	66	44	10	17	22	4959
Duttons Landing	12	38.2	20	122.3	96	68	91	66	89	66	84	64	70	68	31	26	31	34	
Eagle Mtn	14	33.8	973	115.5	113	72	110	71	109	71	105	69	77	75	24	32	37	39	1138
Earlimart	13	35.8	283	119.3	106	71	102	70	101	70	98	69	74	72	36	23	26	29	1100
East Compton	8	34	71	118.2	97	69	90	68	88	68	83	67	72	70	21	33	37	39	436
East Hemet	10	33.7	1655	116.9	109	70	104	69	103	69	101	67	74	72	40	20	25	28	
East La Mirada	9	33.9	115	118.0	99	70	91	69	89	69	85	68	73	71	26	31	36	38	

City	Climate Zone	Latitude	Elevation (ft)	Longitude	Cooling 0.10% DB	Cooling 0.10% MCWB	Cooling 0.50% DB	Cooling 0.50% MCWB	Cooling 1.00% DB	Cooling 1.00% MCWB	Cooling 2.00% DB	Cooling 2.00% MCWB	Design Wetbulb 0.1%	Design Wetbulb 0.5%	Outdoor Daily Range	Winter Median of Extremes	Heating Design Drybulb (0.2%)	Heating Design Drybulb (0.6%)	HDD*
East Los Angeles	9	34	250	118.3	99	69	92	68	90	68	86	67	72	70	21	38	41	43	
East Palo Alto	3	37.5	25	122.1	93	66	85	64	83	64	77	62	68	66	25	26	31	34	1103
East Park Res	11	39.4	1205	122.5	101	69	97	68	96	68	92	66	71	69	38	19	25	28	3455
East Pasadena	9	34.2	864	118.1	99	69	94	68	92	68	88	67	73	71	30	32	37	40	452
East Porterville	13	36.1	393	119.0	106	71	102	70	101	70	97	69	74	72	36	25	30	33	1129
East San Gabriel	9	34.1	450	118.1	99	70	94	69	92	69	88	68	73	71	30	30	35	37	431
Edwards AFB	14	34.9	2316	117.9	107	69	104	68	103	68	99	66	72	70	35	10	17	22	3123
El Cajon	10	32.7	525	117	96	70	91	69	90	69	87	67	72	70	30	29	34	36	
El Capitan Dam	10	32.9	600	116.8	105	71	98	70	97	70	93	68	74	72	35	29	34	36	1533
El Centro	15	32.8	-30	115.6	115	74	111	73	110	73	107	73	81	79	34	26	35	38	1212
El Cerrito	3	37.8	70	122.3	91	66	84	64	81	64	75	62	68	65	17	30	35	38	
El Dorado Hills	12	38.6	673	121.1	103	70	100	69	98	69	94	67	72	71	36	24	30	34	
El Mirage	14	34.6	2910	117.6	105	69	101	68	100	68	97	66	72	70	31	9	16	21	
El Monte	9	34.1	271	118	101	71	97	70	95	70	91	68	73	71	30	31	36	39	
El Paso de Robles	4	35.6	721	120.7	102	65	95	65	94	65	90	65	69	67	44	16	20	23	1768
El Rio	6	34.3	50	119.2	95	69	88	68	86	68	82	66	71	69	20	30	34	37	
El Segundo	6	33.9	105	118.4	91	69	84	68	83	68	79	66	71	69	14	37	40	42	
El Sobrante	3	37.9	55	122.3	91	66	87	65	86	65	82	64	69	67	25	30	35	38	823
El Toro MCAS	8	33.7	380	117.7	96	69	89	69	87	69	82	68	73	71	26	34	38	41	1591
El Toro Station	8	33.7	380	117.7	96	69	89	69	87	69	82	68	73	71	26	34	38	41	560
Electra PH	12	38.3	715	120.7	106	70	102	69	101	69	98	68	73	71	41	23	28	31	2858
Elk Grove	12	38.4	50	121.4	104	71	100	69	98	69	94	68	73	71	35	29	34	36	1150
Elk Valley	1	42	1705	123.7	96	65	90	63	88	63	84	61	67	65	39	16	23	27	5404
Elsinore	10	33.7	1285	117.3	105	71	101	70	100	70	98	69	74	72	39	22	26	29	2128

City	Climate Zone	Latitude	Elevation (ft)	Longitude	Cooling 0.10% DB	Cooling 0.10% MCWB	Cooling 0.50% DB	Cooling 0.50% MCWB	Cooling 1.00% DB	Cooling 1.00% MCWB	Cooling 2.00% DB	Cooling 2.00% MCWB	Design Wetbulb 0.1%	Design Wetbulb 0.5%	Outdoor Daily Range	Winter Median of Extremes	Heating Design Drybulb (0.2%)	Heating Design Drybulb (0.6%)	HDD*
Encinitas	7	33	50	117.3	87	68	83	67	81	67	77	65	70	68	10	35	39	41	
Encino	9	34.2	750	118.5	103	71	98	69	96	69	92	67	74	71	27	28	33	36	664
Enterprise	11	40.6	470	122.3	107	69	103	68	101	68	97	67	72	70	29	26	31	34	
Escondido	10	33.1	660	117.1	97	69	90	68	88	68	84	67	72	70	29	26	31	34	2005
Eureka	1	40.8	43	124.2	75	61	69	59	68	59	65	58	61	60	11	30	35	38	4679
Exeter	13	36.3	350	119.1	104	72	101	71	100	71	97	69	74	72	39	24	29	32	1236
Fair Oaks	12	38.7	50	121.3	104	70	100	69	98	69	94	69	72	71	36	23	29	33	
Fairfax	2	38	110	122.6	96	68	90	66	88	65	83	63	71	68	34	26	31	34	
Fairfield FS	12	38.3	38	122	103	69	98	68	96	68	91	66	73	71	34	24	30	33	2686
Fairmont	14	34.7	3060	118.4	100	67	96	66	95	66	92	65	71	69	22	22	28	31	3330
Fairview	3	35.9	3519	118.5	97	67	94	66	93	66	90	64	70	68	43	11	18	23	
Fallbrook	10	33.6	660	117.3	94	68	89	67	88	67	85	66	71	69	29	26	31	34	2077
Farmersville	13	36.3	350	119.2	104	72	101	72	100	71	97	69	74	72	39	24	29	32	1236
Felton	3	37	100	122.1	94	68	88	66	86	66	81	64	69	67	28	27	32	35	1097
Ferndale	1	40.5	1445	124.3	76	57	66	56	65	56	62	54	59	57	12	28	33	35	
Fillmore	9	34.4	435	118.9	100	70	94	69	92	69	87	67	73	71	30	28	32	35	
Five Points	13	36.4	285	120.2	103	71	99	70	97	70	93	68	73	71	36	21	27	30	
Fleming Fish & Game	16	40.4	4000	120.3	96	62	93	61	92	61	88	59	66	64	40	-3	2	8	
Florence-Graham	8	34	175	118.3	98	69	90	68	88	68	84	67	72	70	19	35	40	43	
Florin	12	38.5	100	121.4	104	71	100	69	98	69	94	68	73	71	35	29	34	36	
Folsom Dam	12	38.7	350	121.2	104	70	101	69	99	69	95	67	72	71	36	25	31	35	
Fontana	10	34.1	1090	117.4	105	70	101	69	100	69	97	67	74	72	33	30	35	38	1530
Foothill Farms	12	38.6	90	121.3	104	71	100	70	98	70	94	68	73	71	36	24	30	34	
Forest Glen	16	40.4	2340	123.3	96	65	92	64	91	64	88	62	67	65	42	12	19	24	

City	Climate Zone	Latitude	Elevation (ft)	Longitude	Cooling 0.10% DB	Cooling 0.10% MCWB	Cooling 0.50% DB	Cooling 0.50% MCWB	Cooling 1.00% DB	Cooling 1.00% MCWB	Cooling 2.00% DB	Cooling 2.00% MCWB	Design Wetbulb 0.1%	Design Wetbulb 0.5%	Outdoor Daily Range	Winter Median of Extremes	Heating Design Drybulb (0.2%)	Heating Design Drybulb (0.6%)	HDD*
Fort Baker	3	37.8	15	122.5	87	66	81	65	79	65	73	65	67	65	12	33	38	40	3080
Fort Bidwell	16	41.9	4498	120.1	93	60	90	59	89	59	85	57	64	62	38	-2	3	10	6381
Fort Bragg	1	39.5	80	123.8	75	60	67	59	66	59	62	58	62	61	15	29	34	37	4424
Fort Jones RS	16	41.6	2725	122.9	98	64	93	63	92	63	88	61	67	65	44	5	13	18	5590
Fort MacArthur	7	33.7	200	118.3	92	69	84	68	82	68	78	66	71	69	13	35	40	42	1819
Fort Ord	3	36.7	134	121.8	86	65	77	63	75	62	70	60	67	64	18	24	29	32	3818
Fort Ross	1	38.5	116	123.3	79	63	74	62	71	61	65	59	64	62	19	30	35	37	4127
Fortuna	1	40.6	100	124.2	75	61	69	59	68	59	65	58	61	60	11	30	35	38	2000
Foster City	3	37.5	20	122.7	92	67	84	65	82	65	76	63	68	66	22	29	34	36	
Fountain Valley	6	33.7	60	118	97	70	90	68	88	68	84	67	72	70	18	33	38	40	
Freedom	3	37	1495	121.8	89	67	85	64	83	64	79	62	68	65	22	27	32	34	
Fremont	3	37.5	56	122	94	67	88	65	86	65	81	63	69	67	24	25	30	33	
Fresno AP	13	36.8	328	119.7	104	73	101	71	100	70	97	68	75	73	34	24	28	30	2650
Friant Gov Camp	13	37	410	119.7	106	72	103	70	102	70	100	68	74	72	40	23	28	31	2768
Fullerton	8	33.9	340	117.9	100	70	94	69	92	69	87	68	73	71	26	30	35	37	
Galt	12	38.2	40	121.3	101	70	97	68	95	68	91	67	72	70	38	23	28	31	1240
Garden Acres	12	38	20	121.3	103	71	98	69	97	69	93	67	73	71	35	24	28	30	1334
Garden Grove	8	33.6	85	117.9	98	70	91	68	89	68	84	67	72	70	23	31	36	38	
Gardena	8	33.9	40	118.3	92	69	85	68	84	68	80	66	71	69	18	32	37	39	
George AFB	14	34.6	2875	117.4	105	67	102	65	101	64	98	62	70	68	31	19	23	26	2887
Georgetown RS	12	38.9	3001	120.8	98	64	95	63	94	63	90	61	68	66	31	18	24	27	
Giant Forest	16	36.6	6412	118.8	84	56	81	55	80	55	77	53	60	58	26	5	13	18	
Gillespie Field	10	32.8	385	117.0	98	71	91	70	89	70	85	68	73	71	30	24	29	32	
Gilroy	4	37	194	121.6	101	70	93	68	91	67	86	65	72	69	25	23	28	31	

City	Climate Zone	Latitude	Elevation (ft)	Longitude	Cooling 0.10% DB	Cooling 0.10% MCWB	Cooling 0.50% DB	Cooling 0.50% MCWB	Cooling 1.00% DB	Cooling 1.00% MCWB	Cooling 2.00% DB	Cooling 2.00% MCWB	Design Wetbulb 0.1%	Design Wetbulb 0.5%	Outdoor Daily Range	Winter Median of Extremes	Heating Design Drybulb (0.2%)	Heating Design Drybulb (0.6%)	HDD*
Glen Avon	10	34	827	117.5	105	70	101	69	99	69	95	67	74	72	35	28	33	35	
Glendale	9	34.2	563	118.3	101	70	96	68	94	68	90	67	73	71	28	30	35	37	
Glendora	9	34.1	822	117.9	102	69	98	68	96	68	92	67	73	71	35	30	35	37	
Glennville	16	35.7	3140	118.7	97	67	94	66	93	66	90	64	70	68	43	11	18	23	4423
Gold Rock Rch	15	32.9	485	114.8	113	73	110	72	109	72	106	70	79	77	28	31	36	38	
Golden Hills	16	35.1	4000	118.5	97	66	93	65	92	65	89	64	69	67	33	13	20	24	
Granada Hills	6	34.4	1032	118.5	100	70	95	68	93	68	89	66	73	70	37	28	31	34	664
Grand Terrace	10	34.1	1000	117.3	105	70	102	68	101	68	97	67	74	72	35	28	33	36	611
Grant Grove	13	36.7	6600	119	82	56	78	55	77	54	74	52	59	57	26	6	14	19	7044
Grass Valley	11	39.2	2400	121.1	99	67	96	65	95	65	91	63	69	67	29	19	25	28	
Graton	2	38.4	200	122.9	95	68	91	67	88	66	82	64	70	68	34	22	28	31	3409
Greenacres	13	35.3	400	119.1	106	71	102	70	101	70	98	68	74	72	34	26	31	35	934
Greenfield	4	36.2	287	121.2	92	67	88	65	87	65	84	64	70	68	32	22	27	30	1020
Grossmont	7	32.7	530	117	96	69	89	68	88	68	84	66	71	69	23	31	36	38	
Grover City	5	35.1	100	120.6	93	69	86	64	84	64	80	62	67	65	18	30	34	37	
Guadalupe	5	35	85	120.6	92	66	86	64	84	64	79	62	67	65	18	28	32	35	1035
Hacienda Hts	9	34	300	118	100	69	96	68	94	68	90	67	73	71	28	31	36	38	
Haiwee	16	36.1	3825	118	102	65	99	64	98	64	95	62	68	66	27	15	22	26	3700
Half Moon Bay	3	37.5	60	122.4	83	64	76	62	74	61	69	59	65	63	15	32	37	39	3843
Hamilton AFB	2	38.1	3	122.5	95	69	88	67	86	67	81	65	73	70	28	27	30	32	3311
Hanford	13	36.3	242	119.7	102	71	99	70	98	70	94	68	73	71	37	22	28	31	2736
Happy Camp RS	16	41.8	1150	123.4	103	67	97	66	96	66	92	65	69	67	41	18	24	27	4263
Hat Creek PH 1	16	40.9	3015	121.6	99	65	96	64	95	64	91	62	68	66	48	2	7	17	5689
Hawaiian Gardens	8	33.8	75	118.1	97	70	91	69	89	69	84	67	72	70	23	32	37	39	

City	Climate Zone	Latitude	Elevation (ft)	Longitude	Cooling 0.10% DB	Cooling 0.10% MCWB	Cooling 0.50% DB	Cooling 0.50% MCWB	Cooling 1.00% DB	Cooling 1.00% MCWB	Cooling 2.00% DB	Cooling 2.00% MCWB	Design Wetbulb 0.1%	Design Wetbulb 0.5%	Outdoor Daily Range	Winter Median of Extremes	Heating Design Drybulb (0.2%)	Heating Design Drybulb (0.6%)	HDD*
Hawthorne	8	33.9	70	118.4	92	69	85	68	84	68	80	66	71	69	16	37	40	42	
Hayfield Pumps	14	33.7	1370	115.6	112	71	108	70	107	70	104	68	77	75	31	24	29	32	1529
Hayward	3	37.7	530	122.1	92	66	86	65	85	64	81	62	68	66	24	26	31	34	2909
Healdsburg	2	38.6	102	122.9	102	69	95	68	94	68	90	66	71	69	37	26	31	34	2572
Hemet	10	33.7	1655	117	109	70	104	69	103	69	101	67	74	72	40	20	25	28	
Henshaw Dam	10	33.2	2700	116.8	99	68	94	67	93	67	90	66	71	69	38	15	22	26	3708
Hercules	3	38	15	122.3	91	66	87	65	86	65	82	64	69	67	25	30	35	38	823
Hermosa Beach	6	33.9	16	118.4	92	69	84	68	82	68	78	66	71	69	12	38	42	45	
Hesperia	14	34.4	3191	117.3	105	67	101	65	100	65	97	63	70	68	38	14	21	25	1654
Hetch Hetchy	16	38	3870	119.8	93	62	89	61	88	61	85	59	65	63	32	14	21	25	4816
Highland	10	34.1	1315	117.2	106	70	102	69	101	69	97	68	74	72	36	26	31	34	
Hillcrest Center	16	35.4	500		106	71	102	70	101	70	98	68	74	72	34	26	31	35	
Hillsborough	3	37.6	352	122.3	90	66	82	65	80	65	74	64	68	66	23	30	35	37	
Hilt	16	42	2900	122.6	97	64	93	62	92	62	89	60	66	64	39	5	13	18	
Hollister	4	36.9	280	121.4	96	68	89	67	87	67	81	65	70	68	30	21	27	30	2725
Hollywood	9	34	384	118.4	96	70	89	69	87	69	83	67	72	70	20	36	41	44	
Home Gardens	10	33.9	678	117.5	104	70	100	69	98	69	92	67	74	72	35	26	31	34	
Hoopa	2	41	360	123.7	100	67	92	66	91	66	87	64	69	67	25	23	28	31	
Huntington Beach	6	33.7	40	117.8	91	69	83	67	81	67	76	66	71	69	14	34	38	41	
Huntington Lake	16	37.2	7020	119.2	80	55	77	54	76	53	73	51	58	56	25	3	11	16	7632
Huntington Park	8	34	175	118	98	70	90	69	88	69	84	67	72	70	20	38	42	45	
Idlewild	1	41.9	1250	124	103	68	96	66	95	66	92	65	69	67	40	18	24	27	
Idria	4	36.4	2650	120.7	97	66	92	65	91	64	87	62	68	66	27	24	29	32	3128
Idyllwild	1	33.7	5397	116.7	93	62	89	61	88	61	84	60	67	65	35	9	16	21	

City	Climate Zone	Latitude	Elevation (ft)	Longitude	Cooling 0.10% DB	Cooling 0.10% MCWB	Cooling 0.50% DB	Cooling 0.50% MCWB	Cooling 1.00% DB	Cooling 1.00% MCWB	Cooling 2.00% DB	Cooling 2.00% MCWB	Design Wetbulb 0.1%	Design Wetbulb 0.5%	Outdoor Daily Range	Winter Median of Extremes	Heating Design Drybulb (0.2%)	Heating Design Drybulb (0.6%)	HDD*
Imperial AP	15	32.8	-59	115.6	114	74	110	73	109	73	106	72	81	79	31	26	31	34	1060
Imperial Beach	7	32.5	23	117.1	87	69	82	68	81	68	78	67	71	69	10	35	39	41	1839
Imperial CO	15	32.9	-64	115.6	112	73	108	72	107	72	104	71	80	78	31	29	34	36	976
Independence	16	36.8	3950	118.2	104	61	101	60	100	60	97	60	65	63	31	12	19	24	
Indio	15	33.7	11	116.3	115	75	112	75	111	75	107	74	81	79	30	24	29	32	1059
Inglewood	8	33.9	105	118	92	68	85	67	84	67	80	65	70	68	15	37	40	42	
Inyokern NAS	16	35.7	2440	117.8	110	71	106	68	105	68	102	66	75	71	37	15	22	26	2772
Ione	12	38.3	298	120.9	101	70	97	68	95	68	91	67	72	70	38	23	28	31	
Iron Mtn	11	34.1	922	115.1	116	75	112	74	111	74	108	73	80	78	26	29	34	36	1251
Irvine	8	33.7	50	118	96	69	88	68	86	68	82	67	72	70	27	33	37	40	
Isla Vista	6	34.5	40	119.9	90	69	83	67	81	67	77	65	70	68	20	33	38	40	
Jess Valley	16	41.3	5300	120.3	92	59	89	58	88	58	84	56	63	61	35	-7	-2	4	7045
John Wayne AP	6	33.6	115	117.9	98	70	91	68	89	68	84	67	72	70	26	33	37	39	1496
Julian Wynola	14	33.1	3650	116.8	96	66	91	64	90	64	87	62	69	67	39	20	24	26	4049
Kentfield	2	38	120	122.6	97	66	91	65	89	65	84	63	70	68	35	27	32	35	3009
Kerman	13	36.6	216	120.1	105	73	101	71	100	70	97	68	75	73	34	24	28	30	1262
Kern River PH 1	13	35.5	970	118.8	106	72	103	71	102	71	99	69	75	73	26	30	35	37	1878
Kern River PH 3	16	35.8	2703	118.6	103	69	100	68	99	68	96	66	72	70	34	19	25	28	2891
Kettleman Stn	13	36.1	508	120.1	104	71	100	70	98	70	93	68	74	72	31	26	31	34	2180
King City	4	36.2	320	121.1	94	67	90	65	89	65	85	64	70	68	36	20	26	29	2639
Kingsburg	13	36.4	297	119.6	104	73	101	71	100	71	97	69	75	73	36	24	30	34	1300
Klamath	1	41.5	25	124.1	79	62	71	60	70	60	66	58	64	61	18	26	31	33	4509
Knights Ferry	12	37.8	315	120.6	103	70	99	68	98	68	94	67	73	71	37	19	25	28	
La Canada-Flintridge	16	34.2	1365	118	99	69	95	68	93	68	88	66	72	70	30	32	36	38	

City	Climate Zone	Latitude	Elevation (ft)	Longitude	Cooling 0.10% DB	Cooling 0.10% MCWB	Cooling 0.50% DB	Cooling 0.50% MCWB	Cooling 1.00% DB	Cooling 1.00% MCWB	Cooling 2.00% DB	Cooling 2.00% MCWB	Design Wetbulb 0.1%	Design Wetbulb 0.5%	Outdoor Daily Range	Winter Median of Extremes	Heating Design Drybulb (0.2%)	Heating Design Drybulb (0.6%)	HDD*
La Crescenta-Montrose	9	34.2	1565	118	98	69	94	68	92	68	87	66	72	70	33	31	35	37	
La Habra	8	33.9	305	118	100	69	94	68	92	68	87	67	72	70	27	30	35	37	
La Habra Heights	9	34	400	118	100	69	94	68	92	68	87	67	72	70	27	30	35	37	
La Mesa	7	32.8	530	117	94	70	88	69	87	69	84	67	72	70	23	34	39	41	1567
La Mirada	9	33.9	115	118	99	70	91	69	89	69	85	68	73	71	26	31	36	38	
La Palma	8	33.9	75	118	98	69	92	68	90	68	85	67	72	70	25	31	35	38	
La Puente	9	34	320	118	101	71	97	70	95	70	91	69	74	72	28	31	36	38	
La Quinta	15	33.8	400	116.3	116	74	112	73	111	73	108	72	79	78	34	26	32	34	332
La Riviera	12	38.6	190	121.3	104	71	100	70	98	70	94	68	73	71	32	30	35	37	1025
La Verne	9	34.1	1235	118	101	69	97	68	95	68	91	67	73	71	34	29	34	36	
Ladera Heights	8	34.1	100	118.4	91	67	84	67	83	67	79	66	71	69	14	37	40	42	383
Lafayette	12	37.9	535	122.1	100	69	94	67	92	67	87	66	71	69	32	24	29	32	
Laguna Beach	6	33.5	35	117.8	91	69	83	68	81	68	76	66	71	69	18	30	33	36	2222
Laguna Niguel	6	33.6	500	117.7	95	67	87	66	85	65	81	63	71	67	22	33	37	40	
Lake Arrowhead	16	34.2	5205	117.2	90	62	86	61	85	61	81	59	66	64	26	13	20	24	5310
Lake Elsinore	10	33.7	1233	117.3	105	70	101	69	100	69	97	68	74	72	39	22	27	30	827
Lake Los Angeles	14	34.7	2300	117.8	106	68	102	67	101	67	98	66	72	70	35	12	17	20	1455
Lake Spaulding	16	39.3	5156	120.6	89	58	86	57	85	57	83	55	62	60	34	3	11	16	6447
Lakeland Village	10	33.6	1233	117.3	105	70	101	69	100	69	97	68	74	72	39	12	27	30	827
Lakeport	2	39	1347	122.9	97	67	93	66	92	65	88	63	69	67	41	20	26	29	3728
Lakeshore	16	40.9	1075	119.2	104	69	100	68	99	68	95	66	71	69	28	29	34	36	
Lakeside	10	32.8	690	117	95	69	90	68	89	68	86	66	72	70	20	26	31	34	
Lakewood	8	33.9	45	118	98	70	90	68	88	68	84	66	72	70	22	33	37	40	

City	Climate Zone	Latitude	Elevation (ft)	Longitude	Cooling 0.10% DB	Cooling 0.10% MCWB	Cooling 0.50% DB	Cooling 0.50% MCWB	Cooling 1.00% DB	Cooling 1.00% MCWB	Cooling 2.00% DB	Cooling 2.00% MCWB	Design Wetbulb 0.1%	Design Wetbulb 0.5%	Outdoor Daily Range	Winter Median of Extremes	Heating Design Drybulb (0.2%)	Heating Design Drybulb (0.6%)	HDD*
Lamont	13	35.3	500	120	106	72	102	71	101	71	98	69	75	73	34	26	32	35	
Lancaster	14	34.7	2340	118.2	106	68	102	67	101	67	98	66	72	70	35	12	17	20	
Larksfield-Wikiup	2	38.5	170	122.8	99	69	96	68	95	68	92	66	71	69	35	24	27	29	1249
Larkspur	3	37.9	20	122.5	97	68	91	66	89	66	84	64	69	68	34	28	33	35	
Las Plumas	11	39.7	506	121.4	104	71	101	70	100	70	96	68	73	71	32	24	29	32	
Lathrop	12	37.8	22	121.3	103	71	98	69	97	69	93	67	73	71	35	24	28	30	1300
Lava Beds	16	41.7	4770	121.5	93	59	89	58	88	58	84	56	63	61	41	-1	4	11	
Lawndale	8	33.9	66	118	92	69	85	68	84	68	80	66	71	69	16	37	40	42	
Le Grand	12	37.2	255	120.3	101	70	96	68	95	68	91	66	72	70	38	23	28	31	2696
Lemon Grove	7	32.7	437	117.2	96	71	88	69	87	69	84	67	72	70	19	34	38	41	
Lemoncove	13	36.4	513	119	105	72	102	70	101	70	98	68	72	70	38	25	38	41	2513
Lemoore NAS	13	36.3	228	120	104	72	101	71	100	71	97	69	74	72	37	19	25	28	2960
Lennox	8	33.9	71	117.8	92	69	85	68	84	68	80	66	71	69	16	37	41	44	
Lincoln Village	12	38	12	121.3	101	70	96	68	95	68	91	67	72	70	37	24	28	30	1334
Linda	11	39	60	121.6	105	72	102	70	101	70	97	68	74	72	30	27	32	35	1160
Lindsay	13	36.2	395	119.1	105	72	101	71	100	71	97	69	74	72	40	24	29	32	2634
Little Panoche	13	36.8	677	120.7	100	68	94	67	92	67	86	66	71	69	33	23	28	31	
Live Oak	11	39.2	75	121.7	105	70	102	69	101	69	97	69	73	71	36	24	29	32	1160
Livermore	12	37.7	490	122	100	69	95	68	93	68	88	67	71	70	35	22	25	28	3012
Livingston	12	37.3	165	120.7	103	72	100	70	99	70	95	68	74	72	39	24	30	34	1244
Llano Shawnee	14	34.5	3820	117.8	104	68	99	67	98	67	95	65	71	69	31	21	27	31	
Lodgepole	16	36.6	6735	118.7	84	57	80	56	80	56	78	54	60	58	26	-4	1	7	
Lodi	12	38.1	40	121.3	101	70	97	68	95	68	91	67	72	70	38	23	28	31	2859
Loma Linda	10	34	1150	117.5	106	70	103	69	102	69	99	67	74	72	36	27	32	35	

City	Climate Zone	Latitude	Elevation (ft)	Longitude	Cooling 0.10% DB	Cooling 0.10% MCWB	Cooling 0.50% DB	Cooling 0.50% MCWB	Cooling 1.00% DB	Cooling 1.00% MCWB	Cooling 2.00% DB	Cooling 2.00% MCWB	Design Wetbulb 0.1%	Design Wetbulb 0.5%	Outdoor Daily Range	Winter Median of Extremes	Heating Design Drybulb (0.2%)	Heating Design Drybulb (0.6%)	HDD*
Lomita	6	33.8	56	119	95	69	87	68	85	68	81	66	71	69	18	33	38	40	
Lompoc	5	34.9	95	120.5	84	63	77	62	76	62	72	60	65	63	18	26	31	34	2888
Long Beach	6	33.7	34	118.2	97	70	88	68	86	67	82	65	65	63	18	35	31	34	
Long Beach AP	8	33.8	25	118.2	99	71	90	69	88	68	84	66	73	71	21	33	38	41	1606
Loomis	11	38.8	408	121.2	107	71	103	70	102	70	98	69	74	72	39	21	27	30	
Los Alamitos NAS	8	33.8	30	118.1	98	71	89	69	87	69	83	68	73	71	23	32	37	39	1740
Los Altos	4	37.3	163	122	96	68	88	65	86	64	80	62	70	68	26	28	33	35	
Los Altos Hills	4	37.3	183	122.1	93	67	85	64	83	64	77	63	68	66	25	28	33	35	1103
Los Angeles AP	6	33.9	97	118.4	91	67	84	67	83	67	79	66	71	69	14	37	40	42	1819
Los Angeles CO	9	34	270	118.2	99	69	92	68	90	68	86	67	72	70	21	38	41	43	1245
Los Banos	12	37	120	120.9	100	70	96	68	94	68	88	67	72	70	42	22	28	31	2616
Los Banos Res	12	37	407	120.9	101	70	97	68	95	68	89	67	72	70	42	23	29	31	
Los Gatos	4	37.2	365	122	98	69	90	67	88	67	82	66	71	69	32	26	31	34	2741
Los Serranos	10	34.1	714	117.7	104	70	100	69	98	69	94	68	74	72	35	27	32	35	706
Lucas Vly-Marinwood	2	38.3	20	122.6	79	63	74	62	71	61	65	59	64	62	12	30	35	37	874
Lucerne Valley	14	34.5	2957	117	105	67	101	66	100	66	98	64	71	69	38	12	19	24	
Lynwood	8	33.9	88	118	98	70	90	69	88	69	83	67	72	70	21	32	37	39	
Madera	13	37	268	120.1	105	72	101	70	100	70	96	68	74	72	40	24	29	32	2673
Madera Acres	13	36.9	275	120.1	105	72	101	70	100	70	96	68	74	72	40	24	29	32	1250
Manhattan Beach	6	33.9	120	118	91	69	84	68	83	68	79	66	71	69	12	38	42	45	
Manteca	12	37.8	34	121.2	102	70	97	68	95	68	91	67	72	70	37	24	29	32	
Manzanita Lake	11	40.5	5850	121.6	87	58	84	57	83	57	79	55	61	59	34	-3	2	8	7617
March AFB	10	33.9	1511	117.3	103	70	99	68	98	67	94	65	74	71	34	23	30	33	2089
Maricopa	13	35.1	675	119.4	106	71	102	70	101	70	98	68	74	72	29	25	30	33	2302

City	Climate Zone	Latitude	Elevation (ft)	Longitude	Cooling 0.10% DB	Cooling 0.10% MCWB	Cooling 0.50% DB	Cooling 0.50% MCWB	Cooling 1.00% DB	Cooling 1.00% MCWB	Cooling 2.00% DB	Cooling 2.00% MCWB	Design Wetbulb 0.1%	Design Wetbulb 0.5%	Outdoor Daily Range	Winter Median of Extremes	Heating Design Drybulb (0.2%)	Heating Design Drybulb (0.6%)	HDD*
Marina	3	36.7	20	121.8	86	66	77	63	75	63	70	61	67	64	18	32	37	40	
Marina del Rey	6	34.1	40	118.5	91	69	84	68	83	68	79	66	71	69	12	38	42	45	383
Markley Cove	2	38.5	480	122.1	104	70	99	69	97	69	93	67	72	70	39	23	29	31	
Martinez FS	12	38	40	122.1	99	67	94	66	92	66	88	65	71	69	36	28	33	35	
Marysville	11	39.2	60	121.6	105	72	102	70	101	70	97	68	74	72	36	27	32	35	2552
Mather AFB	12	38.6	96	121.3	104	71	100	70	98	70	94	68	73	71	35	28	33	35	
Maywood	8	34	170	118	97	70	91	69	89	69	85	67	72	70	21	34	38	41	
McClellan AFB	12	38.7	86	121.4	105	71	102	70	100	70	96	68	74	71	35	23	28	21	2566
McCloud	16	41.3	3300	122.1	96	63	93	62	91	62	87	60	66	64	42	5	13	18	5990
McFarland	13	35.6	350	119.2	106	71	102	70	101	70	98	69	74	72	36	22	25	28	1162
McKinleyville	1	40.9	33	124.1	75	61	69	59	68	59	65	58	61	60	11	28	31	33	1995
Mecca FS	15	33.6	-180	116.1	115	75	111	75	110	75	107	74	81	79	30	24	29	32	1185
Mendota	13	36.7	169	120.4	105	73	101	71	100	70	97	68	75	73	34	24	28	30	1273
Menlo Park	3	37.4	65	122.3	94	67	86	65	84	65	78	63	69	67	25	27	32	34	
Mentone	10	34.1	1700	117.1	106	70	102	69	101	69	98	67	74	72	34	27	32	35	741
Merced AP	12	37.3	153	120.6	103	71	100	69	99	69	95	67	73	71	36	21	27	30	2653
Mill Creek	16	35.1	2940	117	102	67	97	66	96	66	94	65	70	68	28	28	33	36	
Mill Valley	3	37.9	80	122.6	97	68	91	66	89	66	84	64	70	68	28	28	33	35	3400
Millbrae	3	37.6	10	122.4	90	66	82	63	80	63	74	61	67	65	24	30	35	37	
Milpitas	4	37.4	15	121.9	94	68	87	65	85	65	79	63	70	67	27	27	32	35	
Mineral	16	40.4	4911	121.6	90	60	87	59	86	59	82	57	63	61	38	2	7	14	7257
Mira Loma	10	34	700	117.5	105	70	101	69	99	68	95	66	74	72	34	25	33	36	600
Miramar AFS	7	32.9	477	117.1	97	69	91	68	90	68	86	67	72	70	22	32	36	38	1532
Miramonte	13	34.4	750	119.1	102	71	97	69	95	69	91	68	73	71	38	25	29	32	771

City	Climate Zone	Latitude	Elevation (ft)	Longitude	Cooling 0.10% DB	Cooling 0.10% MCWB	Cooling 0.50% DB	Cooling 0.50% MCWB	Cooling 1.00% DB	Cooling 1.00% MCWB	Cooling 2.00% DB	Cooling 2.00% MCWB	Design Wetbulb 0.1%	Design Wetbulb 0.5%	Outdoor Daily Range	Winter Median of Extremes	Heating Design Drybulb (0.2%)	Heating Design Drybulb (0.6%)	HDD*
Mission Viejo	8	33.6	350	118	95	67	87	66	85	65	81	63	71	67	22	33	37	40	
Mitchell Caverns	14	34.9	4350	117.0	102	64	98	63	97	63	94	61	69	67	29	21	27	30	
Modesto	12	37.6	91	121	102	73	99	70	98	70	95	68	75	72	36	25	30	33	2671
Moffett Field NAS	4	37.4	39	122.1	89	68	84	66	82	66	78	64	70	68	23	30	34	36	2511
Mojave	14	35.1	2735	118.2	106	68	102	67	101	67	98	66	71	69	35	16	22	26	3012
Mono Lake	16	38	6450	119.2	91	58	88	57	87	57	84	55	62	60	32	4	12	17	6518
Monrovia	9	34.2	562	118.3	100	69	96	68	94	68	90	67	73	71	30	33	38	41	
Montague	16	41.8	2648	122.5	99	66	95	65	94	65	90	63	69	67	39	3	11	16	5474
Montclair	10	34	1220	117	104	69	100	68	98	68	94	66	73	71	35	28	33	35	
Montebello	9	34	205	118.1	98	69	93	68	91	68	86	67	72	70	24	33	37	39	
Monterey AP	3	36.6	245	121.9	86	65	77	62	75	62	70	61	66	63	20	30	35	38	3556
Monterey CO	3	36.6	345	121.9	87	65	78	62	76	62	71	61	66	63	20	32	37	40	3169
Monterey Park	9	34	380	118	99	69	94	68	92	68	87	67	72	70	23	30	35	37	
Monticello Dam	2	38.5	505	122.1	105	71	100	70	98	70	94	68	73	71	39	26	31	34	
Moraga	12	37.8	600	122.2	99	68	93	66	91	66	86	64	70	68	27	21	26	29	
Moreno Valley	10	33.9	1600	117.2	103	70	99	68	98	67	94	65	74	71	34	27	30	33	611
Morgan Hill	4	37.1	350	120	100	69	92	68	90	68	85	66	71	69	25	26	31	34	
Morro Bay FD	5	35.4	115	120.9	88	65	82	64	80	64	76	62	67	65	14	31	36	38	
Mount Baldy Notch	16	34.3	7735	117.6	80	58	76	57	75	56	71	54	61	59	32	4	10	14	
Mount Diablo	12	37.9	2100	121.9	101	68	96	66	93	66	87	65	68	59	28	27	32	35	4600
Mount Hamilton	4	37.3	4206	121.7	95	59	88	58	86	58	81	56	63	61	18	18	24	27	4724
Mount Hebron RS	16	41.8	4250	122	92	60	88	59	86	59	82	57	63	61	42	-10	-4	0	
Mount San Jacinto	16	33.8	8417	116.6	82	56	77	55	76	55	73	53	61	59	35	-1	4	11	
Mount Shasta	16	41.3	3535	122.3	93	62	89	61	88	61	84	59	65	63	34	8	15	20	5890

City	Climate Zone	Latitude	Elevation (ft)	Longitude	Cooling 0.10% DB	Cooling 0.10% MCWB	Cooling 0.50% DB	Cooling 0.50% MCWB	Cooling 1.00% DB	Cooling 1.00% MCWB	Cooling 2.00% DB	Cooling 2.00% MCWB	Design Wetbulb 0.1%	Design Wetbulb 0.5%	Outdoor Daily Range	Winter Median of Extremes	Heating Design Drybulb (0.2%)	Heating Design Drybulb (0.6%)	HDD*
Mount Wilson	16	34.2	5709	118.1	90	63	85	61	83	60	79	58	66	64	21	15	22	26	4296
Mountain Pass	14	35.5	4730	115.5	100	65	96	64	95	64	92	63	68	66	29	11	18	23	
Mountain View	4	37.5	95	121.9	93	67	85	64	83	64	77	62	68	66	25	28	33	35	
Muscoy	10	34.2	1400	117.3	105	71	101	69	100	68	96	66	75	72	37	26	31	34	614
Nacimiento Dam	4	35.8	770	120.9	100	68	94	66	92	66	88	64	70	68	35	22	28	31	
Napa State Hospital	2	37.3	60	122.3	94	67	91	67	90	67	86	66	71	70	29	26	31	34	2749
National City	7	32.7	34	117	87	70	82	68	81	68	78	66	71	69	10	36	40	42	
Needles AP	15	34.8	913	114.6	117	73	114	72	113	72	110	71	77	75	26	27	32	35	1391
Nevada City	11	39.3	2600	121	97	66	94	64	92	64	88	63	68	66	41	14	21	25	4900
Newark	3	37.5	10	122	94	68	89	67	87	67	82	65	70	68	24	29	34	36	
Newhall Soledad	9	34.4	1243	118.6	104	70	100	68	99	68	95	67	73	71	42	27	33	36	
Newman	12	37.3	90	121.1	104	71	99	69	97	69	93	67	73	71	38	22	28	31	
Newport Beach	6	33.6	10	117.9	87	68	80	66	78	66	72	65	70	68	12	34	39	41	1952
Nipomo	5	35	330	120.5	90	66	83	64	82	63	78	61	67	65	23	25	31	33	1035
Norco	10	33.9	700	117	103	70	99	69	98	69	94	67	74	72	34	27	32	35	
North Auburn	11	38.9	1300	121.1	103	69	100	67	99	67	95	66	72	69	33	25	30	33	1518
North Fork RS	16	37.2	2630	119.5	98	66	95	65	94	64	92	62	69	67	36	15	22	26	
North Highlands	12	38.6	45	121.4	104	71	100	69	98	69	94	67	73	71	35	23	28	31	2566
North Hollywood	9	34.2	619	118.4	102	70	97	69	95	69	91	67	73	71	31	28	33	36	
Northridge	9	34.2	875	118.5	101	70	96	69	94	69	90	67	73	71	36	30	35	38	650
Norwalk	8	33.9	97	118.1	99	69	90	68	88	68	84	67	72	70	26	31	35	37	
Novato	2	38.1	370	122.5	94	64	87	63	85	63	80	61	68	66	30	25	30	32	
Oakdale	12	37.8	215	120.9	102	71	99	69	97	69	93	67	73	71	37	22	28	32	
Oakland AP	3	37.7	6	122.2	91	66	84	64	82	64	77	62	67	65	20	32	34	37	2909

City	Climate Zone	Latitude	Elevation (ft)	Longitude	Cooling 0.10% DB	Cooling 0.10% MCWB	Cooling 0.50% DB	Cooling 0.50% MCWB	Cooling 1.00% DB	Cooling 1.00% MCWB	Cooling 2.00% DB	Cooling 2.00% MCWB	Design Wetbulb 0.1%	Design Wetbulb 0.5%	Outdoor Daily Range	Winter Median of Extremes	Heating Design Drybulb (0.2%)	Heating Design Drybulb (0.6%)	HDD*
Oakland Museum	3	37.8	30	122.2	96	68	89	66	87	65	82	63	69	67	20	31	33	36	
Oakley	12	38	20	121.7	102	70	97	68	95	68	91	66	70	69	34	22	28	31	
Oceano	5	35.1	20	120.6	93	69	86	64	84	64	80	62	67	65	18	30	34	37	795
Oceanside	7	33.2	10	117.4	84	69	80	67	78	67	74	65	70	68	10	33	37	39	
Oildale	13	35.5	450	119	106	71	102	70	101	70	98	68	74	72	34	26	31	35	
Ojai	~~16~~9	34.5	750	119.3	102	71	97	69	95	69	91	68	73	71	38	25	29	32	2145
Olivehurst	11	39	64	121.6	105	72	102	70	101	70	97	68	74	72	36	27	32	35	1160
Ontario AP	10	34	934	117	105	70	101	69	99	68	95	66	74	72	34	26	33	36	1710
Opal Cliffs	3	37	125	122	94	68	88	66	86	66	81	64	69	67	28	27	32	35	1097
Orange	8	33.6	194	118	99	70	92	68	90	68	85	67	72	70	27	33	37	40	
Orange Cove	13	36.6	431	119.3	104	71	100	69	99	69	97	68	73	71	38	25	30	33	2684
Orangevale	12	38.7	140	121.2	105	72	102	70	100	70	96	68	74	71	36	24	30	34	
Orick Prairie Creek	1	41.4	161	124	80	61	75	60	74	60	70	59	63	61	23	25	30	33	4816
Orinda	12	37.9	550	122.2	99	68	93	66	91	66	86	64	70	68	32	21	26	29	
Orland	11	39.8	254	122.2	105	71	102	70	101	70	97	68	73	71	36	22	28	31	2824
Orleans	2	41.3	403	123.5	104	70	97	68	95	68	91	66	71	69	42	21	27	30	3628
Orosi	13	36.5	400	119.3	104	73	101	70	100	70	96	69	75	73	36	24	30	34	1130
Oroville East	11	39.5	171	121.6	106	71	104	70	102	70	98	69	74	72	37	25	30	33	1385
Oroville RS	11	39.5	300	121.6	106	71	104	70	102	70	98	69	74	72	37	25	30	33	
Otay-Castle Pk	7	32.6	500	117	87	68	81	66	79	65	74	63	69	67	10	33	38	40	
Oxnard AFB	6	34.2	49	119.2	94	69	86	68	84	68	79	67	71	69	21	30	34	37	2068
Pacific Grove	3	36.7	114	122	87	66	78	63	76	63	71	61	67	64	19	31	35	37	
Pacifica	3	37.6	13	122	87	65	79	62	77	62	71	60	66	64	16	31	35	37	
Pacoima	9	34.3	895	118.4	104	71	99	70	98	70	94	68	74	72	35	29	34	37	664

City	Climate Zone	Latitude	Elevation (ft)	Longitude	Cooling 0.10% DB	Cooling 0.10% MCWB	Cooling 0.50% DB	Cooling 0.50% MCWB	Cooling 1.00% DB	Cooling 1.00% MCWB	Cooling 2.00% DB	Cooling 2.00% MCWB	Design Wetbulb 0.1%	Design Wetbulb 0.5%	Outdoor Daily Range	Heating Winter Median of Extremes	Heating Design Drybulb (0.2%)	Heating Design Drybulb (0.6%)	HDD*
Palermo	11	39.4	154	121.5	106	71	104	70	102	70	98	69	74	72	37	25	30	33	1170
Palm Desert	15	33.7	200	116.5	116	74	112	73	111	73	108	72	79	78	34	26	32	34	
Palm Desert Country	15	33.7	243	116.3	116	74	112	73	111	73	108	72	79	78	34	26	32	34	374
Palm Springs	15	33.8	411	116.5	117	74	113	73	112	73	109	72	79	78	35	26	31	34	1109
Palmdale AP	14	34.6	2517	118.1	107	67	103	67	102	66	98	64	71	69	33	12	20	24	2929
Palmdale CO	14	34.6	2596	118.1	106	67	102	67	101	66	97	64	71	69	35	13	21	25	2908
Palo Alto	4	37.5	25	122.1	93	66	85	64	83	64	77	62	68	66	25	26	31	34	2891
Palomar Obsy	14	33.4	5545	116.9	90	62	85	61	84	61	80	59	66	64	22	16	20	23	4141
Palos Verdes	6	33.8	216	119	92	69	84	68	82	68	78	66	71	69	14	38	43	46	
Panorama City	9	34.2	801	118.5	103	71	98	69	96	69	92	67	74	71	32	28	33	36	664
Paradise	11	39.8	1750	121.6	102	69	99	67	98	67	94	66	71	69	34	25	30	33	
Paramount	8	33.9	70	117	98	70	90	69	88	69	84	67	72	70	22	32	37	40	
Parker Res	15	34.3	738	114.2	115	74	112	73	111	73	108	72	79	77	26	32	37	40	1223
Parkway-South Sacramento	12	38.5	17	121.4	104	71	100	70	98	70	94	68	73	71	32	30	35	37	1150
Parlier	13	36.6	320	119.5	104	73	101	71	100	70	97	68	75	73	38	24	30	34	1262
Pasadena	9	34.2	864	118.2	99	69	94	68	92	68	88	67	73	71	30	32	37	40	1551
Paso Robles AP	4	35.7	815	120.7	104	66	97	66	96	66	92	65	70	68	40	19	23	26	2973
Paso Robles CO	4	35.6	700	120.7	102	65	95	65	94	65	90	65	69	67	44	16	20	23	2885
Patterson	12	37.4	97	121.1	101	72	96	70	94	69	90	67	74	72	36	24	30	34	1240
Pedley	10	34	718	117.5	105	70	101	69	99	68	95	66	74	72	34	26	33	36	600
Pendleton MCB	7	33.3	63	117.3	92	68	87	67	85	67	81	66	71	69	22	34	39	41	1532
Pendleton MCB Coast	7	33.2	24	117.4	84	69	80	67	79	67	75	65	70	68	10	39	44	46	1782
Perris	10	33.8	1470	117.2	105	70	101	69	100	69	97	68	74	72	39	22	27	30	

City	Climate Zone	Latitude	Elevation (ft)	Longitude	Cooling 0.10% DB	Cooling 0.10% MCWB	Cooling 0.50% DB	Cooling 0.50% MCWB	Cooling 1.00% DB	Cooling 1.00% MCWB	Cooling 2.00% DB	Cooling 2.00% MCWB	Design Wetbulb 0.1%	Design Wetbulb 0.5%	Outdoor Daily Range	Winter Median of Extremes	Heating Design Drybulb (0.2%)	Heating Design Drybulb (0.6%)	HDD*
Petaluma FS 2	2	38.2	16	122.6	98	69	92	67	90	67	85	66	72	69	31	24	29	32	2959
Pico Rivera	9	34	180	118	98	70	91	69	89	69	85	67	72	70	24	31	35	38	
Piedmont	3	37.8	325	122	96	68	89	66	87	65	82	63	70	68	23	31	33	36	
Pinnacles NM	4	36.5	1307	121.2	98	68	94	67	93	66	89	64	70	68	45	20	26	29	2956
Pinole	3	38	10	122.3	91	66	87	65	86	65	82	64	69	67	25	30	35	38	
Pismo Beach	5	35.1	80	120.6	92	66	85	64	84	64	80	62	67	65	16	30	34	37	2756
Pittsburg	12	38	50	121.8	102	70	97	68	95	68	90	67	72	70	34	26	32	35	
Placentia	8	33.9	323	118	101	69	93	68	91	68	87	67	73	71	28	30	34	37	
Placerville	12	38.7	1890	120.8	101	67	98	66	97	66	93	65	70	68	42	20	26	29	4086
Placerville IFG	12	38.7	2755	120.8	100	66	97	65	96	65	92	64	69	67	42	23	28	31	
Platina	11	40.4	2260	122.9	96	65	92	64	91	63	87	61	67	65	36	13	20	24	
Pleasant Hill	12	37.9	102	122	96	68	93	67	92	67	88	65	70	68	34	25	30	33	
Pleasanton	12	37.6	350	121.8	97	68	94	67	93	67	89	65	70	68	35	24	29	32	
Point Arena	1	38.9	100	123.7	76	62	72	60	71	60	67	58	63	61	19	29	32	34	4747
Point Arguello	5	34.6	76	120.7	75	64	71	63	69	62	65	59	65	63	17	29	32	35	3826
Point Mugu	6	34.1	14	119.1	88	68	81	67	79	67	75	66	70	68	15	33	37	39	2328
Point Piedras Blancas	5	35.7	59	121.3	73	60	67	59	65	59	61	57	62	60	10	36	41	43	3841
Pomona Cal Poly	9	34.1	740	117.8	102	70	98	69	97	69	93	67	74	72	36	27	32	35	1971
Port Chicago ND	12	38	50	122	98	69	94	68	92	68	88	66	71	69	34	28	33	36	
Port Hueneme	6	34.2	13	119	88	68	81	67	79	67	75	66	70	68	15	33	37	39	2334
Porterville	13	36.1	393	119	106	71	102	70	101	70	97	69	74	72	36	25	30	33	2456
Portola	16	39.8	4850	120.5	92	63	89	61	88	61	84	59	65	63	48	-9	-3	1	7111
Posey 3 E	16	35.8	4960	119	89	62	86	61	85	61	82	59	65	63	26	9	16	21	
Potter Valley PH	2	39.4	1015	123.1	101	68	96	67	94	67	89	65	70	68	40	20	26	29	3276

City	Climate Zone	Latitude	Elevation (ft)	Longitude	Cooling 0.10% DB	Cooling 0.10% MCWB	Cooling 0.50% DB	Cooling 0.50% MCWB	Cooling 1.00% DB	Cooling 1.00% MCWB	Cooling 2.00% DB	Cooling 2.00% MCWB	Design Wetbulb 0.1%	Design Wetbulb 0.5%	Outdoor Daily Range	Winter Median of Extremes	Heating Design Drybulb (0.2%)	Heating Design Drybulb (0.6%)	HDD*
Poway Valley	10	33	500	117	100	70	94	69	93	69	89	68	73	71	26	29	33	35	
Priest Valley	4	36.2	2300	120.7	97	66	93	65	92	65	88	63	69	67	34	13	20	24	4144
Prunedale	3	36.6	260	121.7	86	66	83	65	82	64	79	62	68	66	20	26	31	34	1100
Quartz Hill	14	34.6	2428	118.2	106	68	102	67	101	67	98	66	72	70	35	12	17	20	1455
Quincy	16	39.9	3409	120.9	101	64	98	63	97	63	93	62	68	66	45	1	6	13	5763
Ramona Spaulding	10	33.1	1480	116.8	103	70	97	69	96	69	92	68	73	71	40	22	28	31	
Rancho Bernardo	10	33	500	117.1	96	69	91	68	89	68	85	67	72	70	26	29	34	36	
Rancho Cordova	12	38.6	190	121.3	104	72	100	69	98	69	94	68	74	71	35	26	31	33	
Rancho Mirage	15	33.8	248	116.4	117	74	113	73	112	73	109	72	79	78	33	26	31	34	374
Rancho Palos Verdes	6	33.7	216	118.2	92	69	84	68	82	68	78	66	71	69	14	38	43	46	
Rancho San Diego	10	32.8	300	117.0	94	69	86	68	85	68	82	66	71	69	30	34	38	41	404
Rancho Santa Margarita	8	33.6	116	117.6	95	67	87	66	85	65	81	63	71	67	22	33	37	40	496
Randsburg	14	35.3	3570	117.7	105	67	102	66	101	66	97	65	70	68	30	19	25	28	2922
Red Bluff AP	11	40.2	342	122.3	107	70	104	69	102	68	98	66	73	71	31	24	29	31	2688
Redding FS 4	11	40.6	470	122.4	107	69	103	68	101	68	97	67	72	70	30	26	31	34	2544
Redlands	10	34.1	1318	117.2	106	70	102	69	101	69	98	67	74	72	34	27	32	35	1993
Redondo Beach	6	33.8	45	118.3	92	69	84	68	82	68	78	66	71	69	12	37	42	44	
Redwood City	3	37.5	31	122.2	90	67	86	66	85	66	81	64	69	67	28	28	33	35	2599
Reedley	13	36.6	344	119.7	104	71	101	70	100	70	96	68	74	72	40	24	30	34	
Reseda	9	34.2	736	118.5	103	71	98	69	96	69	92	67	74	71	32	28	33	36	664
Rialto	10	34.1	1254	117	105	70	101	69	100	68	96	66	74	72	35	28	33	35	
Richardson Grove	2	40	500	123.8	96	67	92	66	91	66	87	64	69	67	28	25	30	33	
Richmond	3	37.9	55	121.6	88	65	84	64	82	64	77	62	67	65	17	31	36	38	2684

City	Climate Zone	Latitude	Elevation (ft)	Longitude	Cooling 0.10% DB	Cooling 0.10% MCWB	Cooling 0.50% DB	Cooling 0.50% MCWB	Cooling 1.00% DB	Cooling 1.00% MCWB	Cooling 2.00% DB	Cooling 2.00% MCWB	Design Wetbulb 0.1%	Design Wetbulb 0.5%	Outdoor Daily Range	Winter Median of Extremes	Heating Design Drybulb (0.2%)	Heating Design Drybulb (0.6%)	HDD*
Ridgecrest	14	35.6	2340	117.8	110	70	106	68	105	68	102	66	75	71	35	15	22	26	
Rio Del Mar	3	37	50	121.9	94	67	88	66	87	65	83	63	69	67	30	27	32	35	1097
Rio Linda	12	38.6	86	121.5	104	72	100	70	98	70	94	68	74	71	32	28	33	35	1290
Ripon	12	37.7	61	121.1	102	70	97	68	95	68	91	67	72	70	37	23	30	33	1240
Riverbank	12	37.7	133	120.9	102	73	99	70	98	70	95	68	75	72	36	25	30	33	1240
Riverside Exp Sta	10	34	986	117.4	106	71	102	69	101	69	97	67	75	72	36	29	34	36	
Riverside FS 3	10	34	840	117.4	104	70	100	69	99	68	95	65	74	72	37	27	32	35	1818
Rocklin	11	38.8	239	121.2	108	72	104	70	103	70	99	69	74	72	39	20	26	29	3143
Rodeo	3	38.1	15	122.3	93	67	90	66	88	66	84	64	70	68	23	28	33	36	823
Rohnert Park	2	38.4	106	122.6	99	69	96	68	95	68	92	66	71	69	33	24	27	29	
Rolling Hills	6	33.6	216	119	92	69	84	68	82	68	78	66	71	69	15	38	43	46	
Rosamond	14	34.8	2326	118.2	106	68	102	67	101	67	98	66	71	69	35	16	22	26	1455
Roseland	2	38.4	167	122.7	99	69	96	68	95	68	92	66	71	69	35	24	27	29	1249
Rosemead	9	34	275	118	98	70	90	69	88	69	84	67	72	70	27	30	35	37	
Rosemont	12	38.3	190	121.4	104	71	100	70	98	70	94	68	73	71	32	30	35	37	1025
Roseville	11	38.7	160	121.2	105	71	102	70	100	70	96	68	74	71	36	24	30	34	
Rossmoor	8	33.8	20	118.1	92	67	85	64	83	64	79	62	71	69	19	32	37	39	
Rowland Hts	9	33.9	540	118	99	70	93	69	91	69	86	68	73	71	27	29	34	36	
Rubidoux	10	34	792	117	106	71	102	70	101	70	97	68	75	73	36	27	32	35	
Sacramento AP	12	38.5	17	121.5	104	72	100	70	98	70	94	68	74	71	35	26	31	33	2843
Sacramento CO	12	38.6	84	121.5	104	71	100	70	98	70	94	68	73	71	32	30	35	37	
Saint Helena	2	38.5	225	122.5	102	70	98	69	97	69	93	67	72	70	40	22	28	31	2878
Saint Mary's College	12	37.8	623	122.1	98	69	93	68	91	68	86	66	71	69	28	21	27	30	3543
Salinas 3 E	3	36.7	85	121.6	86	66	83	65	82	64	79	62	68	66	20	26	31	34	

City	Climate Zone	Latitude	Elevation (ft)	Longitude	Cooling 0.10% DB	Cooling 0.10% MCWB	Cooling 0.50% DB	Cooling 0.50% MCWB	Cooling 1.00% DB	Cooling 1.00% MCWB	Cooling 2.00% DB	Cooling 2.00% MCWB	Design Wetbulb 0.1%	Design Wetbulb 0.5%	Outdoor Daily Range	Winter Median of Extremes	Heating Design Drybulb (0.2%)	Heating Design Drybulb (0.6%)	HDD*
Salinas AP	3	36.7	69	121.6	85	67	82	65	81	64	78	62	69	66	20	28	33	35	2959
Salt Springs PH	16	38.5	3700	120.2	95	62	92	61	91	61	87	59	66	64	27	19	25	28	3857
Salyer RS	16	40.9	623	123.6	102	69	95	67	93	66	87	64	70	68	33	22	28	31	
San Anselmo	2	38	50	122	95	67	89	66	87	66	82	65	70	68	32	26	31	33	
San Antonio Canyon	10	34.2	2394	117.7	100	68	96	67	94	67	90	65	72	70	33	29	35	39	
San Antonio Mission	4	36	1060	117.7	99	69	94	68	92	68	88	67	71	69	28	19	25	28	
San Bernardino	10	34.1	1125	117.3	106	70	102	69	101	69	98	68	75	72	39	27	31	33	1777
San Bruno	3	37.7	20	122.4	86	66	80	64	78	64	73	62	67	65	23	30	35	38	3042
San Carlos	3	37.5	26	122.3	92	67	88	65	86	65	82	63	68	66	28	28	33	35	
San Clemente	6	33.4	208	118.6	91	68	85	67	84	67	80	66	71	69	12	31	35	37	
San Diego AP	7	32.7	13	117.2	88	70	83	69	82	69	78	68	72	70	13	38	42	44	1507
San Dimas	9	34	955	118.4	102	70	98	69	96	69	92	67	74	72	35	30	35	37	
San Fernando	9	34.3	977	118.5	104	71	99	70	98	70	94	68	74	72	37	30	35	37	1800
San Francisco AP	3	37.6	8	122.4	89	66	83	64	80	63	74	61	67	64	20	31	35	38	3042
San Francisco CO	3	37.8	52	122.4	84	65	79	63	77	62	71	60	66	63	14	38	41	44	3080
San Gabriel FD	9	34.1	450	118.1	99	70	94	69	92	69	88	68	73	71	30	30	35	37	1532
San Gregorio 2 SE	3	37.3	275	122.4	87	66	81	63	79	63	74	61	68	65	30	27	32	35	
San Jacinto	10	33.8	1535	117	110	70	105	69	104	69	102	68	75	73	41	20	26	29	2376
San Jose	4	37.4	67	121.9	94	68	86	66	84	66	78	64	70	68	26	29	34	36	2438
San Leandro	3	37.7	45	122.2	89	67	83	64	81	64	76	62	69	66	22	28	33	35	
San Lorenzo	3	37.7	45	122.1	89	67	83	64	81	64	76	62	69	66	23	28	33	36	
San Luis Dam	12	37.1	277	121.1	97	68	91	66	90	66	86	64	70	68	32	25	30	33	
San Luis Obispo	5	35.3	320	120.7	94	63	87	63	85	63	81	62	67	65	26	30	33	35	2498
San Marcos	10	33.1	567	117.2	97	69	98	68	94	68	84	67	72	70	29	26	31	34	662

City	Climate Zone	Latitude	Elevation (ft)	Longitude	Cooling 0.10% DB	Cooling 0.10% MCWB	Cooling 0.50% DB	Cooling 0.50% MCWB	Cooling 1.00% DB	Cooling 1.00% MCWB	Cooling 2.00% DB	Cooling 2.00% MCWB	Design Wetbulb 0.1%	Design Wetbulb 0.5%	Outdoor Daily Range	Winter Median of Extremes	Heating Design Drybulb (0.2%)	Heating Design Drybulb (0.6%)	HDD*
San Marino	9	34.2	300	118.1	100	69	95	68	93	68	88	66	73	71	28	30	35	37	
San Mateo	3	37.5	21	122.3	92	67	84	65	82	65	76	63	68	66	24	31	36	38	2655
San Nicholas Island	6	33.2	504	119.5	85	66	78	65	76	65	70	64	69	67	11	39	43	45	2454
San Pablo	3	37.6	30	122.3	90	65	84	63	82	63	77	61	69	66	17	29	34	37	
San Pedro	6	33.7	10	118.3	92	69	84	68	82	68	78	66	72	70	13	35	31	34	1819
San Rafael	2	38	40	122.6	96	67	90	65	88	65	83	63	71	68	29	30	35	37	2440
San Ramon	12	37.7	360	122	99	69	93	67	91	67	86	65	70	68	35	24	29	32	1369
Sandberg	16	34.8	4517	118.7	95	63	91	61	90	61	87	59	67	65	32	17	21	24	4427
Sanger	13	36.7	364	119.6	105	72	101	70	100	70	96	68	74	72	37	24	30	34	
Santa Ana FS	8	33.8	115	117.8	98	70	91	68	89	68	84	67	72	70	26	33	35	38	1430
Santa Barbara AP	6	34.4	9	119.8	90	69	83	67	81	67	77	65	70	68	20	29	34	36	2487
Santa Barbara CO	6	34.4	5	119.7	91	69	84	67	82	67	78	65	70	68	22	33	38	40	1994
Santa Clara Univ	4	37.4	88	121.9	90	67	87	65	86	65	82	63	69	67	30	29	34	36	2566
Santa Clarita	9	34.4	1300	118.5	103	71	98	70	97	70	93	68	74	72	36	30	35	37	
Santa Cruz	3	37	125	122	94	68	88	66	86	66	81	64	69	67	28	27	32	35	3136
Santa Fe Springs	9	33.9	280	118.1	99	69	90	68	88	68	84	67	72	70	24	31	36	38	
Santa Maria AP	5	34.9	236	120.5	90	66	83	64	82	63	78	61	67	65	23	25	31	33	3053
Santa Monica	6	34	15	118.5	85	67	78	66	76	66	72	64	69	67	15	39	44	46	1873
Santa Paula	9	34.4	263	119.1	101	71	94	70	92	70	87	68	73	71	28	28	33	35	2030
Santa Rosa	2	38.5	167	122.8	99	69	96	68	95	68	92	66	71	69	35	24	27	29	2980
Santee	10	32.8	400	117	96	69	91	68	90	68	87	67	72	70	20	25	30	33	
Saratoga	4	37.3	500	122	96	67	88	66	86	66	80	65	70	68	31	27	32	35	
Sausalito	3	37.9	10	122.5	85	66	80	65	78	65	73	63	67	65	12	30	34	36	
Sawyer's Bar RS	16	41.3	2169	123.1	100	66	95	65	93	64	88	62	68	66	38	14	21	25	4102

City	Climate Zone	Latitude	Elevation (ft)	Longitude	Cooling 0.10% DB	Cooling 0.10% MCWB	Cooling 0.50% DB	Cooling 0.50% MCWB	Cooling 1.00% DB	Cooling 1.00% MCWB	Cooling 2.00% DB	Cooling 2.00% MCWB	Design Wetbulb 0.1%	Design Wetbulb 0.5%	Outdoor Daily Range	Winter Median of Extremes	Heating Design Drybulb (0.2%)	Heating Design Drybulb (0.6%)	HDD*
Scotia	1	40.5	139	124.4	78	61	74	60	73	60	69	58	63	61	19	28	33	35	3954
Scotts Valley	3	37	400	122	94	68	88	66	86	66	81	64	69	67	28	27	32	35	1097
Seal Beach	6	33.8	21	118.1	94	69	86	68	84	67	80	65	71	69	15	35	40	42	1519
Seaside	3	36.6	17	122.9	85	66	79	64	77	64	73	62	67	65	20	30	35	37	
Sebastapol	2	38.4	102	122.8	99	69	96	68	95	68	92	66	71	69	35	24	27	29	1249
Selma	13	36.6	305	119.6	104	73	101	71	100	70	97	68	75	73	38	24	30	34	
Sepulveda	9	34.2	818	118.5	103	71	98	69	96	69	92	67	74	71	32	28	33	36	664
Shafter	13	35.5	345	119.2	106	71	102	70	101	70	98	68	74	72	28	24	29	32	2185
Shasta Dam	11	40.7	1076	122.4	105	69	101	68	99	68	95	67	72	70	27	29	34	36	2943
Shelter Cove	1	40	110	124.1	80	61	73	60	72	59	68	57	63	61	15	34	39	41	
Sherman Oaks	9	34.2	657	118.5	103	71	98	69	96	69	92	67	74	71	28	29	34	37	664
Sierra City	16	39.6	4230	120.1	96	62	93	61	92	61	89	59	66	64	43	12	19	24	
Sierra Madre	9	34.2	1153	118.1	102	69	96	68	94	68	90	67	73	71	27	32	37	39	
Sierraville RS	16	39.6	4975	120.4	94	60	91	59	90	59	86	57	64	62	44	-10	-4	0	6893
Signal Hill	6	33.5	100	118.2	99	70	90	69	88	68	84	66	72	70	19	35	39	42	
Simi Valley	9	34.4	500	118.8	98	70	93	68	91	68	87	66	73	71	30	28	33	35	
Solana Beach	7	33	15	117.3	87	68	83	67	81	67	77	65	70	68	10	35	39	41	
Soledad	3	36.4	200	121.3	90	67	87	65	86	65	82	64	70	67	23	24	29	32	1020
Sonoma	2	38.3	70	122.5	101	70	96	69	94	69	90	67	72	70	40	22	28	31	2998
Sonora RS	12	38	1749	120.4	103	68	100	67	99	67	95	66	72	70	34	20	26	29	3537
Soquel	3	37	50	122	94	67	88	66	86	65	81	63	69	67	24	27	32	35	1097
South El Monte	9	34	270	118.1	101	72	97	70	95	70	91	68	74	72	28	31	36	38	
South Entr Yosemite	16	37.5	5120	119.6	92	61	88	60	87	60	84	59	64	62	36	8	15	20	5789
South Gate	8	33.9	120	118.2	97	70	90	69	88	69	84	67	72	70	21	32	37	39	

City	Climate Zone	Latitude	Elevation (ft)	Longitude	Cooling 0.10% DB	Cooling 0.10% MCWB	Cooling 0.50% DB	Cooling 0.50% MCWB	Cooling 1.00% DB	Cooling 1.00% MCWB	Cooling 2.00% DB	Cooling 2.00% MCWB	Design Wetbulb 0.1%	Design Wetbulb 0.5%	Outdoor Daily Range	Winter Median of Extremes	Heating Design Drybulb (0.2%)	Heating Design Drybulb (0.6%)	HDD*
South Laguna	6	33.6	100	117.7	91	69	83	68	82	68	78	66	71	69	18	30	33	36	586
South Lake Tahoe	16	38.9	6200	120	85	56	82	55	79	55	71	54	60	58	33	-2	3	10	
South Oroville	11	39.5	174	121.6	106	71	104	70	102	70	98	69	74	72	37	25	30	33	1385
South Pasadena	9	34	657	118.2	99	69	94	68	92	68	88	67	73	71	30	31	36	38	
South San Francisco	3	37.7	10	122.4	87	67	81	64	78	64	72	62	68	65	20	32	36	38	
South San Gabriel	9	34.1	450	118.1	99	70	94	69	92	69	88	68	73	71	73	30	35	37	431
South Whittier	9	33.9	300	118	100	70	92	69	90	69	84	68	73	71	30	31	36	38	
South Yuba City	11	39.1	59	121.6	105	69	101	69	100	69	96	68	72	71	36	24	29	32	1160
Spring Valley	10	32.7	300	117	94	69	86	68	85	68	82	66	71	69	30	34	38	41	
Squaw Valley	16	39.2	6235	120.2	88	57	85	56	84	56	80	54	61	59	40	-10	-4	0	
Squirrel Inn	16	34.2	5680	117.2	86	61	82	60	81	60	77	58	65	63	23	12	18	22	5175
Stanford	4	37.5	23	122.1	93	66	85	64	83	64	77	62	68	66	25	26	31	34	1103
Stanton	8	33.6	45	118	98	69	91	68	89	68	84	67	72	70	24	31	36	38	
Stockton AP	12	37.9	22	121.3	103	71	98	69	97	69	93	67	73	71	35	24	28	30	2806
Stockton FS 4	12	38	12	121.3	101	70	96	68	95	68	91	67	72	70	37	24	28	30	2846
Stony Gorge Res	11	39.6	791	122.5	104	70	99	69	97	69	93	67	72	70	37	21	27	30	3149
Strawberry Valley	16	39.6	3808	121.1	96	63	93	62	92	62	88	60	66	64	32	14	21	25	5120
Studio City	9	34.3	620	118.4	102	70	97	69	95	69	91	67	73	71	31	28	33	36	664
Suisun City	12	38.2	72	122	103	71	98	69	96	68	91	66	73	70	35	24	29	32	1299
Sun City	10	33.7	1420	117.2	105	70	101	69	100	69	97	68	74	72	39	22	27	30	827
Sunland	16	34.3	1460	118.3	107	71	102	70	100	70	96	68	74	72	36	28	33	36	
Sunnyvale	4	37.3	97	122	96	68	88	66	86	66	80	64	70	68	26	29	34	36	2511
Susanville AP	16	40.4	4148	120.6	98	62	95	61	94	61	90	59	66	64	38	-1	4	11	6233
Taft	13	35.1	987	119.5	106	71	102	70	101	70	98	68	74	72	34	26	31	35	934

City	Climate Zone	Latitude	Elevation (ft)	Longitude	Cooling 0.10% DB	Cooling 0.10% MCWB	Cooling 0.50% DB	Cooling 0.50% MCWB	Cooling 1.00% DB	Cooling 1.00% MCWB	Cooling 2.00% DB	Cooling 2.00% MCWB	Design Wetbulb 0.1%	Design Wetbulb 0.5%	Outdoor Daily Range	Heating Winter Median of Extremes	Heating Design Drybulb (0.2%)	Heating Design Drybulb (0.6%)	HDD*
Tahoe City	16	39.2	6230	120.1	84	56	81	55	80	55	76	53	60	58	36	2	7	14	8085
Tahoe Valley AP	16	38.9	6254	120.0	85	56	82	55	81	55	77	53	60	58	38	-5	2	6	
Tamalpais-Homestead Valley	3	37.9	25	122.5	97	68	91	66	89	66	84	64	70	68	28	28	33	35	874
Tarzana	9	34.2	800	118.6	104	71	99	69	97	69	93	68	74	71	27	27	32	35	664
Tehachapi	16	35.1	3975	118.5	97	66	93	65	92	65	89	64	69	67	33	13	20	24	4494
Tejon Rancho	16	35	1425	118.8	107	71	103	70	102	70	99	68	74	72	27	24	29	32	2602
Temecula	10	33.5	1006	117.2	101	69	96	68	95	68	91	67	73	71	34	24	29	32	
Temple City	9	34.1	403	118.1	101	70	95	69	93	69	89	68	73	71	27	30	35	37	
Termo	16	40.9	5300	120.5	95	60	92	59	91	59	87	57	64	62	37	-17	-11	-4	
Thermal AP	15	33.6	-112	116.1	114	74	110	74	109	74	106	74	80	79	29	26	31	35	1154
Thermalito	11	37.9	25	121.6	106	71	104	70	102	70	98	69	74	72	37	25	30	33	
Thousand Oaks	9	34.2	810	118.8	98	69	93	68	92	68	88	67	72	70	30	27	32	35	
Three Rivers PH 1	13	36.5	1140	118.9	105	70	102	69	101	69	98	67	73	71	38	24	30	32	2642
Tiburon	3	37.9	90	122.5	85	66	80	65	78	65	73	63	67	65	12	30	34	36	
Tiger Creek PH	16	38.5	2355	120.5	100	66	96	65	95	65	92	63	69	67	36	20	26	29	3795
Torrance	6	33.8	110	118.3	93	69	86	68	84	68	80	66	71	69	18	32	37	39	1859
Tracy Carbona	12	37.7	140	121.4	102	70	97	68	95	68	90	67	72	70	38	24	29	32	2704
Tracy Pumps	12	37.8	61	121.4	104	71	99	69	97	69	92	68	73	71	39	23	28	31	
Travis AFB	12	38.3	72	121.9	103	71	98	69	96	68	91	66	73	70	35	24	29	32	2725
Trinity Dam	16	40.8	2500	122.8	99	65	94	64	92	64	88	62	68	66	37	17	24	28	
Trona	14	35.8	1695	117.4	113	72	109	70	108	70	105	68	76	73	35	18	24	27	2415
Truckee RS	16	39.3	5995	120.2	90	58	87	57	86	57	82	55	62	60	40	-10	-4	0	8230
Tujunga	16	34.3	1820	118.3	103	70	99	69	98	69	94	67	73	71	36	20	26	29	

City	Climate Zone	Latitude	Elevation (ft)	Longitude	Cooling 0.10% DB	Cooling 0.10% MCWB	Cooling 0.50% DB	Cooling 0.50% MCWB	Cooling 1.00% DB	Cooling 1.00% MCWB	Cooling 2.00% DB	Cooling 2.00% MCWB	Design Wetbulb 0.1%	Design Wetbulb 0.5%	Outdoor Daily Range	Winter Median of Extremes	Heating Design Drybulb (0.2%)	Heating Design Drybulb (0.6%)	HDD*
Tulare	13	36.2	290	119.4	105	72	101	71	100	71	96	69	74	72	39	24	30	34	
Tulelake	16	42	4035	121.5	92	60	88	59	87	59	83	57	63	61	41	-5	0	6	6854
Turlock	12	37.5	100	120.9	104	72	100	70	99	70	95	68	74	72	40	24	30	34	
Turntable Creek	16	40.8	1067	120.9	105	69	101	68	99	68	95	66	72	70	28	24	29	32	
Tustin Foothills	8	33.8	500	117.8	99	71	92	69	90	69	85	68	73	71	27	28	31	34	550
Tustin Irvine Rch	8	33.7	118	117.8	99	71	92	69	90	69	85	68	73	71	27	28	31	34	1856
Twentynine Palms	14	34.1	1975	116.1	110	71	107	70	106	70	103	69	76	74	31	21	26	29	1973
Twin Lakes	16	38.7	7829	119.1	73	49	64	47	62	47	57	46	53	50	30	-7	-2	4	9196
Twitchell Dam	5	35	582	120.3	99	70	93	68	92	68	88	66	71	69	26	26	31	34	
UCLA	9	34.1	430	118.4	93	69	86	68	84	68	80	66	71	69	20	39	43	46	1509
Ukiah	2	39.2	623	123.2	100	70	97	69	96	69	92	68	72	71	42	22	28	31	2958
Union City	3	37.6	5	122.1	90	67	87	66	85	65	81	63	69	67	20	25	30	33	
Upland	10	34.1	1605	117.7	102	69	98	68	96	68	92	66	73	71	31	29	34	36	2175
Upper Lake RS	2	39.2	1347	123	98	68	95	67	94	66	91	64	73	71	39	18	34	36	
Upper San Leandro	3	37.8	394	122.1	93	67	87	66	85	65	80	63	69	67	22	28	33	35	
Vacaville	12	38.4	105	122	103	71	100	70	98	70	94	68	73	71	40	23	28	31	2788
Valinda	9	34	340	117.9	102	70	98	69	96	69	92	68	74	72	28	31	36	38	
Valle Vista	10	33.8	1655	116.9	109	70	104	69	103	69	101	67	74	72	40	20	25	28	
Vallejo	3	38.1	85	122.3	93	67	90	66	88	66	84	64	70	68	23	28	33	36	
Valyermo RS	14	34.5	3600	117.9	100	67	96	66	95	66	91	65	70	68	41	12	19	24	3870
Van Nuys	9	34.2	708	118.5	103	71	98	69	96	69	92	67	74	71	30	28	33	39	664
Vandenburg AFB	5	34.7	368	122.8	85	62	77	61	75	61	71	60	64	62	16	30	35	37	3451
Ventura	6	34.3	341	119.3	89	68	82	67	80	67	76	66	70	68	15	29	34	36	
Victorville Pumps	14	34.5	2858	117.3	105	67	101	65	100	64	97	62	70	68	39	14	24	27	3191

					Cooling												Heating		
					0.10%		0.50%		1.00%		2.00%								
City	Climate Zone	Latitude	Elevation (ft)	Longitude	DB	MCWB	DB	MCWB	DB	MCWB	DB	MCWB	Design Wetbulb 0.1%	Design Wetbulb 0.5%	Outdoor Daily Range	Winter Median of Extremes	Design Drybulb (0.2%)	Design Drybulb (0.6%)	HDD*
View Park	6, 8	34	300	118.3	95	69	88	68	85	68	78	66	71	69	18	36	40	43	
Villa Park	8	33.8	300	117.8	99	70	92	68	90	68	85	67	72	70	27	33	37	40	550
Vincent	9	34.5	3135	118.1	105	67	101	65	100	65	96	64	71	69	33	10	18	22	1455
Visalia	13	36.3	325	119.3	103	71	100	70	99	70	96	69	73	72	38	25	30	33	2459
Vista	~~10~~7	33.2	510	117.2	96	69	90	68	89	68	85	67	72	70	16	30	35	37	
Volta PH	12	40.5	2220	120.9	101	66	98	65	97	65	93	63	69	67	33	21	27	30	
Walnut	9	34	550	117.9	101	70	97	69	96	69	92	69	74	72	30	28	33	35	
Walnut Creek	12	37.9	245	122.1	100	69	94	67	92	67	87	66	71	69	32	23	29	31	
Walnut Grove	12	38.2	23	121.5	102	70	98	69	96	69	92	68	72	71	37	24	30	32	
Walnut Park	8	33.9	45	118.2	92	69	84	68	82	68	78	66	71	69	12	37	42	44	450
Warner Springs	14	33.3	3180	116.6	100	67	95	66	94	66	91	65	71	69	40	15	22	26	3591
Wasco	13	35.6	333	119.3	105	71	101	70	100	70	97	68	74	72	36	23	28	31	2466
Watsonville	3	36.9	95	121.8	86	66	82	64	81	63	79	61	68	65	22	28	33	35	3418
Weaverville RS	16	40.7	2050	122.9	100	67	95	66	93	65	89	63	69	67	46	10	17	22	4992
Weed FD	16	41.4	3590	122.4	92	63	89	62	88	61	84	59	65	63	35	4	12	17	
West Athens	8	33.9	25	118.3	92	69	85	68	84	68	80	66	71	69	18	32	37	39	450
West Carson	6	33.8	100	118.3	92	69	87	68	85	68	81	66	71	69	18	32	37	39	
West Compton	8	33.9	71	118.3	97	69	90	68	88	68	83	67	72	70	21	33	37	39	450
West Covina	9	34	365	117.9	102	70	98	69	96	69	92	68	74	72	34	29	34	36	
West Hollywood	9	34	290	118.4	95	70	89	69	87	69	82	67	72	70	20	38	42	45	
West Pittsburg	12	38	12	121.9	102	70	97	68	95	68	90	67	72	70	34	26	32	35	
West Puente Valley	9	34	500	117.9	101	71	97	70	95	70	91	68	73	71	26	31	36	39	
West Sacramento	12	38.6	19	121.5	104	72	100	70	98	70	94	68	74	71	35	26	31	33	1290

City	Climate Zone	Latitude	Elevation (ft)	Longitude	Cooling 0.10% DB	Cooling 0.10% MCWB	Cooling 0.50% DB	Cooling 0.50% MCWB	Cooling 1.00% DB	Cooling 1.00% MCWB	Cooling 2.00% DB	Cooling 2.00% MCWB	Design Wetbulb 0.1%	Design Wetbulb 0.5%	Outdoor Daily Range	Heating Winter Median of Extremes	Heating Design Drybulb (0.2%)	Heating Design Drybulb (0.6%)	HDD*
West Whittier-Los Nietos	9	34	320	118.1	99	69	90	68	88	68	84	67	72	70	24	31	35	38	
Westlake Village	9	34.2	750	118.8	103	71	99	70	98	70	94	69	73	71	26	26	30	33	
Westminster	6	33.8	38	118	95	70	88	68	86	68	81	67	72	70	23	33	38	41	
Westmont	8	33.9	110	118.3	96	70	89	69	87	69	83	67	72	70	20	36	41	44	400
Whiskeytown Res	11	40.6	1295	122.6	105	69	101	68	100	68	96	67	72	70	31	25	30	33	
White Mtn 1	16	37.5	10150	119.3	73	49	69	47	68	47	65	45	53	50	37	-15	-9	-6	
White Mtn 2	16	37.6	12470	119.3	61	42	58	41	57	41	54	40	46	43	38	-20	-15	-12	
Whittier	9	34	320	118	99	69	90	68	88	68	84	67	72	70	24	31	35	38	
Wildomar	10	33.6	1255	117.3	103	70	99	69	98	69	94	68	74	72	36	23	28	30	827
Wildrose RS	16	36.3	4100		100	64	97	63	96	63	93	61	68	66	33	13	20	24	
Williams	11	39.2	85	122.2	104	71	100	70	98	70	94	68	73	71	36	24	29	32	
Willits	2	39.4	1350	123.3	95	66	89	65	87	64	82	62	68	66	38	18	24	27	
Willow Brook	8	33.9	60	118.2	97	70	90	69	88	69	83	67	72	70	21	35	39	42	
Willow Creek	2	41	461	123	104	70	98	68	96	68	92	66	71	69	35	22	28	31	
Willows	11	39.5	140	122.2	104	71	100	70	98	70	94	68	73	71	36	22	28	31	2836
Windsor	2	38.5	130	122.8	99	69	96	68	95	68	92	66	71	69	35	24	27	29	1249
Winters	12	38.5	135	122	104	71	99	70	97	70	93	68	73	71	38	24	29	32	2593
Winton	12	37.4	168	120.6	103	71	100	69	99	69	95	67	73	71	36	21	27	30	1244
Woodcrest	10	33.9	1500	117.4	104	70	100	69	99	68	95	65	74	72	37	27	32	35	611
Woodfords	16	38.8	5671	119.8	92	59	89	58	88	58	84	56	63	61	32	0	5	12	6047
Woodlake	13	36.3	500	119.1	103	71	100	70	99	70	96	69	73	72	38	25	30	33	1130
Woodland	12	38.7	69	121.8	106	72	101	71	100	71	96	69	74	72	40	25	30	33	2708

City	Climate Zone	Latitude	Elevation (ft)	Longitude	Cooling 0.10% DB	Cooling 0.10% MCWB	Cooling 0.50% DB	Cooling 0.50% MCWB	Cooling 1.00% DB	Cooling 1.00% MCWB	Cooling 2.00% DB	Cooling 2.00% MCWB	Design Wetbulb 0.1%	Design Wetbulb 0.5%	Outdoor Daily Range	Winter Median of Extremes	Heating Design Drybulb (0.2%)	Heating Design Drybulb (0.6%)	HDD*
Woodland Hills	9	34.2	944	118.6	104	71	99	70	97	70	93	68	74	72	32	26	31	34	664
Woodside	3	37.5	75	122.3	92	67	84	66	82	65	76	63	69	67	24	22	28	31	
Yorba Linda	8	33.9	350	117.8	102	70	94	69	92	69	88	68	73	71	31	30	35	37	1643
Yosemite Park Hq	16	37.7	3970	119.6	97	63	94	62	93	62	90	60	67	65	38	11	18	23	4785
Yreka	16	41.7	2625	122.6	99	66	95	65	94	65	90	64	69	67	39	8	15	20	5395
Yuba City	11	39.1	70	121.6	105	69	101	69	100	69	96	68	72	71	36	24	29	32	
Yucaipa	10	34	2600	117	106	68	102	67	101	67	98	65	73	71	35	27	32	35	
Yucca Valley	14	34.2	2600	116.4	108	71	105	70	104	70	101	69	75	73	32	19	24	27	862

***Heating Degree Day** is a unit, based on temperature difference and time, used in estimating fuel consumption and specifying nominal annual heating load of a building. For any one day when the mean temperature is less than 65ºF (18ºC), there exist as many degree days as there are Fahrenheit degrees difference in temperature between mean temperature for the day and 65ºF (18ºC).

KEY TO ABBREVIATIONS:

AFB	Air Force Base
AFS	Air Force Station
AP	Airport
CO	City/County Office
FD	Fire Department
FS	Fire Station
MCB	Marine Corps Base
MWWB	Mean Coincident Wet Bulb
NAS	Naval Air Station
NM	National Monument
PH	Power House
RS	Ranger Station

(This page left intentionally blank.)

Joint Appendix JA3

Appendix JA3 – Time Dependent Valuation (TDV)

JA3.1 Scope and Purpose

Time dependent valuation (TDV) is the currency used to compare energy performance when the performance compliance method is used. TDV is also used to evaluate the cost effectiveness of measures and to perform other codes analysis. TDV replaces source energy, which was used to compare performance prior to the 2005 Standards.

TDV consists of large data sets that convert electricity, gas or propane to TDV energy. The rate of conversion varies for each hour of the year, for each climate zone and for each energy type (electricity, natural gas or propane). The conversion factors also vary by building type: low-rise residential and other building types, including nonresidential, hotel/motel and high-rise residential. There are a total of 144 hourly data sets (16 climate zones x 3 fuel types x 3 building types) where the 3 building types are residential 30 year, nonresidential 15 year, nonresidential 30 year. The actual TDV data may be downloaded from http://www.energy.ca.gov/title24/2013standards/prerulemaking/documents/general_cec_documents/2011_TDV_v3_110112.xlsx.

Because of the length, the actual data is not published in this appendix.

JA3.2 Summary of Data

Table 3- through Table 3- give a statistical summary of the TDV conversion factors for electricity, natural gas and propane. Each table has the annual minimum, maximum, and average for each climate zone and building type.

(a) Table 3-2 – TDV Statistical Data – Electricity (kBtu/kWh)~~Table 3-2 – TDV Statistical Data – Electricity (kBtu/kWh)Table 3-2 – TDV Statistical Data – Electricity (kBtu/kWh)Table 3-2 – TDV Statistical Data – Electricity (kBtu/kWh)~~

(b) Table 3-3 – TDV Statistical Data – Natural Gas (kBtu/therm)~~Table 3-3 – TDV Statistical Data – Natural Gas (kBtu/therm)Table 3-3 – TDV Statistical Data – Natural Gas (kBtu/therm)Table 3-3 – TDV Statistical Data – Natural Gas (kBtu/therm)~~

(c) Table 3-3 – TDV Statistical Data – Propane (kBtu/therm)~~Table 3-3 – TDV Statistical Data – Propane (kBtu/therm)Table 3-3 – TDV Statistical Data – Propane (kBtu/therm)Table 3-3 – TDV Statistical Data – Propane (kBtu/therm)~~

Table 3-2 – TDV Statistical Data – Electricity (kBtu/kWh)

	Residential			Nonresidential (15yr)			Nonresidential (30 yr)		
Climate Zone	Minimum	Average	Maximum	Minimum	Average	Maximum	Minimum	Average	Maximum
1	10.68	21.26	165.87	9.40	20.89	188.25	10.02	21.92	184.56
2	10.68	21.26	237.74	9.35	20.83	271.49	9.96	21.86	265.33
3	10.68	21.26	276.54	9.36	20.84	317.49	9.97	21.87	308.99
4	10.68	21.26	254.19	9.35	20.84	290.99	9.97	21.87	283.84
5	10.67	21.26	203.75	9.42	20.90	231.55	10.03	21.93	227.17
6	9.99	20.53	343.04	9.31	20.75	397.14	9.92	21.77	384.48
7	10.78	21.32	308.10	9.71	21.15	352.22	10.33	22.18	344.71
8	10.02	20.56	240.70	9.32	20.76	275.83	9.94	21.79	269.38
9	9.87	20.41	317.59	9.22	20.66	367.04	9.84	21.70	355.93
10	9.86	20.40	241.73	9.20	20.64	277.34	9.82	21.68	270.60
11	9.86	21.26	245.82	9.37	20.85	281.60	9.98	21.89	274.44
12	10.67	21.26	208.46	9.38	20.86	236.81	9.99	21.89	232.43
13	10.68	21.26	175.5	9.36	20.84	197.73	9.97	21.87	195.34
14	9.85	20.39	153.52	9.20	20.64	172.81	9.82	21.68	171.40
15	9.87	20.40	156.97	9.23	20.67	176.90	9.85	21.70	175.29
16	9.81	20.35	225.15	9.17	20.61	257.72	9.80	21.65	251.97

Table 3-3 – TDV Statistical Data – Natural Gas (kBtu/therm)

	Residential			Nonresidential (15yr)			Nonresidential (30 year)		
Climate Zone	Minimum	Average	Maximum	Minimum	Average	Maximum	Minimum	Average	Maximum
1	140.86	159.51	185.55	142.20	163.33	192.87	147.02	167.98	197.27
2	140.86	159.51	185.55	142.20	163.33	192.87	147.02	167.98	197.27
3	140.86	159.51	185.55	142.20	163.33	192.87	147.02	167.98	197.27
4	140.86	159.51	185.55	142.20	163.33	192.87	147.02	167.98	197.27
5	140.86	159.51	185.55	142.20	163.33	192.87	147.02	167.98	197.27
6	141.14	160.45	187.44	142.50	164.40	195.04	147.33	169.04	199.40
7	140.43	157.62	181.62	142.70	165.49	197.38	147.54	170.12	201.70
8	141.14	160.45	187.44	142.50	164.40	195.04	147.33	169.04	199.40
9	141.14	160.45	187.44	142.50	164.40	195.04	147.33	169.04	199.40
10	141.14	160.45	187.44	142.50	164.40	195.04	147.33	169.04	199.40
11	140.86	159.51	185.55	142.20	163.33	192.87	147.02	167.98	197.27
12	140.86	159.51	185.55	142.20	16.33	192.87	147.02	167.98	197.27
13	140.86	159.51	185.55	142.20	163.33	192.87	147.02	167.98	197.27
14	141.14	160.45	187.44	142.50	164.40	195.04	147.33	169.04	199.40
15	141.14	160.45	187.44	142.50	164.40	195.04	147.33	169.04	199.40
16	141.14	160.45	187.44	142.50	164.40	195.04	147.33	169.04	199.40

Table 3-3 – TDV Statistical Data – Propane (kBtu/therm)

	Residential			Nonresidential (15yr)			Nonresidential (30 year)		
Climate Zone	Minimum	Average	Maximum	Minimum	Average	Maximum	Minimum	Average	Maximum
1	328.06	410.71	480.19	299.23	374.89	438.49	311.42	389.24	454.66
2	328.06	410.71	480.19	299.23	374.89	438.49	311.42	389.24	454.66
3	328.06	410.71	480.19	299.23	374.89	438.49	311.42	389.24	454.66
4	328.06	410.71	480.19	299.23	374.89	438.49	311.42	389.24	454.66
5	328.06	410.71	480.19	299.23	374.89	438.49	311.42	389.24	454.66
6	328.06	410.71	480.19	299.23	374.89	438.49	311.42	389.24	454.66
7	328.06	410.71	480.19	299.23	374.89	438.49	311.42	389.24	454.66
8	328.06	410.71	480.19	299.23	374.89	438.49	311.42	389.24	454.66
9	328.06	410.71	480.19	299.23	374.89	438.49	311.42	389.24	454.66
10	328.06	410.71	480.19	299.23	374.89	438.49	311.42	389.24	454.66
11	328.06	410.71	480.19	299.23	374.89	438.49	311.42	389.24	454.66
12	328.06	410.71	480.19	299.23	374.89	438.49	311.42	389.24	454.66
13	328.06	410.71	480.19	299.23	374.89	438.49	311.42	389.24	454.66
14	328.06	410.71	480.19	299.23	374.89	438.49	311.42	389.24	454.66
15	328.06	410.71	480.19	299.23	374.89	438.49	311.42	389.24	454.66
16	328.06	410.71	480.19	299.23	374.89	438.49	311.42	389.24	454.66

(This page left intentionally blank.)

Joint Appendix JA4

Appendix JA4 – U-factor, C-factor, and Thermal Mass Data

Table of Contents

JA4.1 Scope and Purpose 2
JA4.1.1 Introduction 2
JA4.1.2 California Energy Commission Approved Software 3
JA4.1.2.1 Determining R-value and U-factor of Construction Assemblies 3
JA4.1.2.2 Accounting for Continuous Insulation R-value 5
JA4.1.2.3 Accounting for Unusual Construction Layers 6
JA4.1.2.4 Double Walls 6
JA4.1.3 Tapered Insulation 7
JA4.1.4 Insulating Layers on Mass and Other Walls 7
JA4.1.5 Wood Based Sheathing R-values 7
JA4.1.6 Framing Percentages for Calculating U-factors 8
JA4.1.7 R-values and U-factors for Medium-Density Closed Cell and Low-Density Open Cell Spray Polyurethane Foam (SPF) Insulation: 9
JA4.2 Roofs and Ceilings 11
Table 4.2.1 – U-factors of Wood Framed Attic Roofs 11
Table 4.2.2 – U-factors of Wood Framed Rafter Roofs 13
Table 4.2.4 – U-factors of Metal Framed Attic Roofs 19
Table 4.2.5 – U-factors of Metal Framed Rafter Roofs 22
Table 4.2.6 –U-factors for Span Deck and Concrete Roofs 25
Table 4.2.7 – U-factors for Metal Building Roofs 27
Table 4.2.8 – U-factors for Insulated Ceiling with Removable Panels 29
Table 4.2.9 – U-factors of Insulated Metal Panel Roofs and Ceilings 30
JA4.3 Walls 31
Table 4.3.1 – U-factors of Wood Framed Walls 31
Table 4.3.2 – U-factors of Structurally Insulated Wall Panels (SIPS) 33
Table 4.3.3 – U-factors of Metal Framed Walls for Nonresidential Construction 36
Table 4.3.4 – U-factors of Metal Framed Walls for Residential Construction 38
Table 4.3.5 – Properties of Hollow Unit Masonry Walls 40
Table 4.3.6 – Properties of Solid Unit Masonry and Solid Concrete Walls 42
Table 4.3.7 - Properties of Concrete Sandwich Panels… 45

Table 4.3.8 – U-factors for Spandrel Panels and Glass Curtain Walls 46
Table 4.3.9 – U-factors for Metal Building Walls 50
Table 4.3.10 – U-factors for Insulated Metal Panel Walls 52
Table 4.3.11 – Thermal Properties of Log Home Walls 53
Table 4.3.12 – Thermal and Mass Properties of Straw Bale Walls 54
Table 4.3.13 - Thermal Properties of Insulating Concrete… 56
Table 4.3.14 – Effective R-values for Interior or Exterior Insulation Layers 57
JA4.4 Floors and Slabs 59
Table 4.4.1 – Standard U-factors for Wood-Framed Floors with a Crawl Space 59
Table 4.4.2 – Standard U-factors for Wood Framed Floors without a Crawl Space 61
Table 4.4.3 – Standard U-factors for Wood Foam Panel (SIP) Floors 63
Table 4.4.4 – Standard U-factors for Metal-Framed Floors with a Crawl Space 66
Table 4.4.5 – Standard U-factors for Metal-Framed Floors without a Crawl Space 68
Table 4.4.6 – Standard U-factors for Concrete Raised Floors 70
Table 4.4.7 – F-Factors for Unheated Slab-on-Grade Floors 71
Table 4.4.8 – F-Factors for Heated Slab-on-Grade Floors 72
JA4.5 Miscellaneous Construction 73
Table 4.5.1 – Doors 73
JA4.6 74
Table 4.6.1 - Physical Properties of Materials… 75
Table 4.6.2 – Rules for Calculating Mass Thermal Properties From Published Values 75

JA4.1 Scope and Purpose

JA4.1.1 Introduction

The values in this appendix must be used for all residential and nonresidential prescriptive compliance calculations. California Energy Commission approved compliance software may make adjustments to the values in these tables using procedures described in this appendix.

The data tables are organized first by roofs, walls, and floors. For each, the data is further organized by construction type, beginning with wood framed construction, followed by metal framed construction, concrete and special construction assemblies. Each table features a letter/number coordinate system (shaded in gray) that can be used as an identifier for each value, i.e. 4.2.1-A10 indicates Table 4.2.1, Column A, Row 10. Construction assembly descriptions shall be concatenated first by row and then by column. For example, the descriptions of 4.2.1.-A20 and 4.3.1-H3 and shall be as follows (abbreviations are acceptable):

Wood Framed Attic, Trusses@24 inch. OC, R-30 attic insulation, No continuous insulation
Wood Framed Wall, Wd 2x4 @16 inch OC, R-13 cavity insulation, R-14 continuous insulation

The R-value representing the component(s) of a construction assembly may be rounded to the nearest whole R-value. If a construction assembly is not adequately represented in the tables below, the permit applicant or the manufacturer of the product may request the California Energy Commission approve alternative U-factors for the construction assembly. The California Energy Commission Executive Director will grant such approval, after reviewing submittals and supporting information from the applicant and the merits of the information to support the intended use. Acceptable calculation methods for determining a

construction component's R-value or overall assembly U-factor are based on ASHRAE *Handbook of Fundamental* procedures, such as:

(a) Testing: Guarded Hot Plate (ASTM C177)

Heat Flow Meter (ASTM C518)

Hot Box Apparatus (ASTM C1363)

(b) Series/Parallel Path Calculation Method for wood framed assemblies of roof/ceilings, walls (above and below grade), and floors.

(c) Modified Zone Method for roof/ceilings, walls, and floor constructions that have metal framing.

New component(s) of a construction assembly approved by the Executive Director will be published as an addendum to this appendix for use by all compliance authors. Addenda may consist of new tables or additional rows or columns to existing tables.

JA4.1.2 California Energy Commission Approved Software

California Energy Commission approved software used for performance or prescriptive calculations may make adjustments to the data contained in this appendix to account for the special circumstances of particular constructions. This section defines the rules for making these adjustments. These adjustments may not be made when the tables are used manually. Software may have input screens where the user may choose a construction by entering the cavity insulation (or insulation penetrated by framing); the continuous insulation; and other factors such as framing spacing. To the software user, the process of using these tables may look very much like a traditional U-factor calculation.

JA4.1.2.1 Determining R-value and U-factor of Construction Assemblies

The installer shall provide documentation from the manufacturer supporting the installed R-value. Some products have R-value markings, others do not. For site applied insulation (i.e., loose-fill glass fiber and mineral fiber, cellulose, and spray polyurethane foam insulation), the insulation shall be installed in comformance to the manufacturer's coverage chart, R-value chart, or similar performance data sheet.

Data presented in the tables is not inclusive of all materials or combinations of materials used in construction of residential and nonresidential buildings. Information presented for framed and nonframed assemblies provides a summary of the reference assembly components representing the R-value and U-factor necessary for determining prescriptive compliance with the Standards. This data is also used by approved compliance software to establish the required thermal efficiencies affecting energy use for the standard design building in performance compliance calculations.

R-value is used to describe insulation effectiveness, but R-value does not describe the overall performance of the complete assembly. Construction assemblies usually have more than one layer and each layer has its own conductance, or rate of heat transfer. The U-factor more fully describes the conductance of every component of the construction assembly.

The prescriptive compliance table values for framed and nonframed assemblies of wood and steel roof and ceilings, walls, and floors are developed from series and parallel path procedures of the American Society of Heating, Refrigerating and Air-Conditioning Engineers, Inc. (ASHRAE). Approved computer software uses more detailed calculations and must be used for all buildings using mass type construction. Prescriptive compliance can be demonstrated when the insulation's R-value is equal to or greater than the R-value required for the envelope feature in the climate zone which the building is permitted for construction; or has an overall U-factor equal to or less than the U-factor required for the envelope feature in the climate zone which the building is permitted for construction.

For example, the R-value and U-factor of components within assemblies of wood framing that are not represented in the tables can be calculated using the procedure shown below (i.e., substituting for different components). For example, R-values of different insulation types can be inserted into Table 4.1.1 and the

assembly's overall R-value and U-factor can be determined. Each layer of the assembly is entered in sequence at a cross-section through its cavity, from outside to inside.

For more advanced assemblies, and for steel framed assemblies, within the California Building Code Compliance software (CBECC) for both residential and nonresidential buildings, the Energy Commission has developed ~~the EZ-FRAME2013~~an assembly calculator ~~program~~ to automate ASHRAE procedures in order to help the building community in calculating R-values and U-factors of wood and metal framed assemblies with a higher degree of accuracy and speed. The output forms of this program can be used as part of a residential or nonresidential building permit submittal.

Table 4.1.1 U-Factor Calculations for Wood Framed Assembly

	Assembly Type: Wall 2x4 16 in. o.c	R-Value	
	Framing Material: Wood		
	Assembly Components	**Cavity (R_c)**	**Frame (R_f)**
	Outside air film	0.17	0.17
1	3/8 inch 2-coat stucco	0.08	0.08
2	1 inch, R-4 EPS insulating sheathing	4.0	4.0
3	Building paper (felt)	0.06	0.06
4	R-15 insulation	15	--
5	2x4 inch doug fir framing @ R-0.99 per inch	--	3.47
6	0.50 inch gypsum board	0.45	0.45
	Inside air film	0.68	0.68
	Subtotal	**20.44**	**8.91**

	1/Rc	X (1–(Frame% / 100))]	+ [	(1/Rf)	X	(Frame% / 100)]		Assembly U-Factor
	[(1/20.44)	X (1- (25/100))]	+ [	(1/8.91)	X	(25/100)]		**0.065**

[1/Rc x (1 – (Frame% / 100))] + [(1/Rf) x (Frame% / 100)] = Assembly U-Factor

Where: Frame percentage (%) determined by Table 4.1.6

JA4.1.2.2 Accounting for Continuous Insulation R-value

Many of the tables in this appendix have columns for varying levels of continuous insulation. Continuous insulation is insulation that is uninterrupted by framing and provides a continuous insulating layer. Limits on the position of the continuous insulation and other factors are specified in each table. When data from a table is used manually, the R-value of the continuous insulation in the proposed construction shall be equal to or greater than the R-value shown in the column heading; no interpolation is permitted. California Energy Commission approved software used for performance or prescriptive calculations may account for any amount of continuous insulation using Equation 4-1. This adjustment may not be used, however, for continuous insulation with thermal resistance less than R-2.

$$U_{With.Cont.Insul} = \frac{1}{\frac{1}{U_{Col.A}} + R_{Cont.Insul}} \qquad \textbf{Equation 4-1}$$

Where:

$U_{With.Cont.Insul}$ Calculated U-factor of the construction assembly with a specific R-value of continuous insulation.

$U_{Col.A}$ A U-factor selected from column A.

$R_{Cont.Insul}$ The R-value of continuous insulation.

If insulation layers are added that are interrupted by furring strips, then the effective R-values from Table

4. 3.13 shall be used in Equation 4-1.

JA4.1.2.3 Accounting for Unusual Construction Layers

The assumptions that are the basis of the U-factors published in this appendix are documented in the paragraphs following each table. California Energy Commission approved software used for prescriptive or performance calculations may be used to make adjustments to these assumptions based on data entered by the software user. Adjustments may only be made, however, when the total R-value of the proposed construction is at least an R-2 greater than the documented assumption. Each table includes the assumptions used to determine the U-factors.

Equation 4-2 shall be used to make these adjustments.

$$U_{Proposed} = \frac{1}{\frac{1}{U_{With.Cont.Insul}} + \Delta R_{Assumed}} \qquad \text{Equation 4-2}$$

Where:

$U_{Proposed}$ Calculated U-factor of the proposed construction assembly.

$U_{With.Cont.Insul}$ The U-factor adjusted for continuous insulation using Equation 4-1.

$\Delta R_{Assumed}$ The difference in R-value between what was assumed in the table and the proposed construction for a continuous layer.

There are limits, however, on the types of adjustments that can be made.

(a) The difference in resistance shall be at least R-2. When calculating the difference in R-value, no changes in assumptions shall be made to the framing/insulation layer; the proposed construction shall assume the same values as the table.

(b) The thermal resistance of air layers shall be taken from the 2009 ASHRAE Handbook of Fundamentals, for a mean temperature of 50°F, a temperature difference of 20 °F and an effective emittance of 0.82.

(c) R-values for air layers for roof and ceiling assemblies shall be based on heat flow up. R-values for air layers for floor assemblies shall be based on heat flow down. R-values for other assemblies shall be based on horizontal heat flow. Air layers must be sealed on edges to prevent air layer mixing with ambient air.

(d) One additional air gap may be credited, but not air gaps that are within the framing insulation cavity layer; these are already accounted for in the published data. Air gaps of less than 0.5 inch thickness shall be considered to have an R-value of zero. An example of an acceptable additional air gap would be the space between a brick veneer and the sheathing on the framed wall.

JA4.1.2.4 Double Walls

The U-factor of double walls or other double assemblies may be determined by combining the U-factors from the individual construction assemblies that make up the double wall. The following equation shall be used.

$$U_{Combined} = \frac{1}{\frac{1}{U_1} + \frac{1}{U_2}} \qquad \text{Equation 4-3}$$

JA4.1.3 Tapered Insulation

If continuous roof insulation is tapered for drainage or other purposes, then the user may determine the overall U-factor in one of two ways:

(a) To determine the U-factor for the roof at the location where the insulation is at a minimum and where it is at a maximum. Take the average of these two U-factors. With the R-value compliance approach (prescriptive method only), calculate the R-value as the inverse of the average U-factor as determined above. R-values may not be averaged.

(b) Divide the roof into sub-areas for each one-inch increment of insulation and determine the U-factor of each sub-area. This approach may only be used with the performance method, and in this case, each sub area shall be modeled as a separate surface.

When roofs have a drain located near the center and when tapered insulation creates a slope to the drain, the surface area at the maximum insulation thickness will be significantly greater than the surface area at the minimum thickness, so the second method will give a more accurate result. The first method yields a conservative estimate for roofs with central drains.

JA4.1.4 Insulating Layers on Mass and Other Walls

The data in Table 4.3.14 may be used to modify the U-factors and C-factors from Table 4.3.5, Table 4.3.6, and Table 4.3.7 when an additional layer is added to the inside or outside of the mass wall. For exterior insulation finish systems (EIFS) or other insulation only systems, values should be selected from row 26 of Table 4.3.14 In these cases, the R-value of the layer is equal to the R-value of the insulation. The other choices from this table represent systems typically placed on the inside of mass walls. The following equations calculate the total U-factor or C-factor, where U_{mass} and C_{mass} are selected from Table 4.3.5, Table 4.3.6, or Table 4.3.7 and $R_{Outside}$ and R_{Inside} are selected from Table 4.3.14. $R_{outside}$ is selected from row 26 while R_{inside} is selected from rows 1 through 25.

$$U_{Total} = \frac{1}{R_{Outside} + \frac{1}{U_{Mass}} + R_{Inside}} \qquad \text{Equation 4-4}$$

$$C_{Total} = \frac{1}{R_{Outside} + \frac{1}{C_{Mass}} + R_{Inside}} \qquad \text{Equation 4-5}$$

The values from Table 4.3.14 may be used to modify the U-factors of other construction assemblies as well, when non-homogeneous layers are added (see Equation 4-1).

JA4.1.5 Wood Based Sheathing R-values

For the purpose of calculations for the Joint Appendices plywood, particle board, oriented strand board (OSB) and similar sheathing materials will all be considered Wood Based Sheathing. A single R-value will be used for each thickness listed regardless of the material. This approach simplifies calculations yet has little effect on the overall R-value of assemblies since the differences in sheathing R-value are minimal compared to the overall assembly.

R-values for Wood Based Sheathing

Thickness	R-value (ft^2-hr ^oF/Btu)
3/8 inch	0.36
1/2 inch	0.48
5/8 inch	0.60
3/4 inch	0.72
1 inch	0.96
1 1/4 inch	1.20

JA4.1.6 Framing Percentages for Calculating U-factors

The thermal resistance of framed assemblies is dependent on the assembly's total R-value, and the quality of construction to limit air intrusion within the assembly that can rob the insulation of its effectiveness. A given assembly type is made of several individual layers components, each having specific resistance values. However, the assembly's R-value and overall U-factor is primarily affected by: (1) the R-value of insulation installed within the cavity, (2) the R-value of continuous insulating sheathing added to the interior or exterior face of the framing, and, (3) the amount of framing that interrupts the plane of insulation separating conditioned from unconditioned space. All framed assemblies shall include the framing percentages indicated in Table 4.1.6.

Advanced wall systems (AWS) reduce the amount of material required for wall framing which increases the insulation within the cavity by:

(a) Use of 24" oc framing

(b) Eliminating intermediate framing for cripple and king studs

(c) Use of single top plates

(d) Use of double stud corners

(e) Use of in-line (i.e., stack) framing to maintain continuity of transferring live loads of roof framing to wall framing, allowing roof sheathing and exterior siding to be installed at full widths

(f) Reducing framing for connections at interior partition walls (i.e., T-walls)

(g) Reducing window and door header size

Table 4.1.6 – Framing Percentages

Assembly Type	Framing Spacing	Framing Percentage
Walls	16"o.c.	25 %
	24"o.c.	22 %
	48"o.c.	4 %
AWS	24" o.c.	17%
Walls Metal	16"o.c.	15%
	24"o.c.	12%
Floors	16"o.c.	10 %
	24"o.c.	7 %
Roofs	16"o.c.	10 %
	24"o.c.	7 %
	48"o.c.	4 %

JA4.1.7 R-values and U-factors for Medium-Density Closed Cell and Low-Density Open Cell Spray Polyurethane Foam (SPF) Insulation:

These procedures apply to two types of SPF used as building insulation: medium-density closed cell SPF (ccSPF) and low-density open cell SPF (ocSPF).

(a) ccSPF: A spray applied polyurethane foam insulation having a closed cellular structure resulting in an installed nominal density of 1.5 to less than 2.5 pounds per cubic foot (pcf).

R-value: The total R-value shall be calculated based on the nominal required thickness of the insulation multiplied by an R-value of 5.8 per inch. The R-value of ccSPF insulation shall meet or exceed the installed thickness specified in Table 4.1.7.

Alternatively, the total R-value may be calculated based on the thickness of insulation multiplied by the "tested R-value per inch" as listed in the Table of R-values or R-value Chart from the manufacturer's current ICC Evaluation Service Report (ESR) that shows compliance with *Acceptance Criteria for Spray-Applied Foam Plastic Insulation--AC377*. Based on this calculation, the overall assembly U-factor shall be determined by selecting the assembly that matches the assembly type, framing configuration, and cavity insulation from the appropriate Reference Joint Appendix JA4 table or other approved method specified in Section JA4 of the Reference Appendices.

The R-value of the installed insulation shall be based on the verified thickness at an R-value of 5.8 per inch unless an ESR is provided with compliance documentation that verifies use of other values. Approved compliance software shall make appropriate adjustments to account for the R-value and U-factor effects of the ccSPF assembly.

Nominal Thickness: ccSPF sprayed into framed cavities or on flat surfaces will expand with variable thicknesses, visibly appearing as undulations on the surface of the insulation. The average thickness of the foam insulation must meet or exceed the required R-value. Depressions in the foam insulation's surface shall not be greater than 1/2-inch of the required thickness at any given point of the surface area being insulated.

Filling of Framed Assemblies: ccSPF insulation is not required to fill the cavities of framed assemblies provided the installed thickness of insulation conforms to compliance documentation and that the bottom and top plates of vertical framing and both ends of horizontal framing, including band and rim joists, are sprayed to completely fill the cavity adjacent to and in contact with the framing to a distance of 2.0 inches away from the framing for ocSPF insulation, or filled to the thickness meeting ASTM testing as an air barrier.

Air Barrier: ccSPF installed as an air barrier shall be a minimum of 2.0 inches in thickness; alternatively, ccSPF insulation shall be installed at a thickness that meets an air permeance no greater than 0.02 L/s-m^2 at 75 Pa pressure differential when tested in accordance to ASTM E2178 or ASTM E283.

(b) ocSPF: A spray applied polyurethane foam insulation having an open cellular structure resulting in an installed nominal density of 0.4 to less than 1.5 pounds per cubic foot (pcf).

R-value: The total R-value shall be calculated based on the nominal required thickness of the insulation multiplied by an R-value of 3.6 per inch. The R-value of ocSPF insulation shall meet or exceed the installed thickness specified in Table 4.1.7.

Alternatively, the total R-value may be calculated based on the thickness of insulation multiplied by the "tested R-value per inch" as listed in the Table of R-values or R-value Chart from the manufacturer's current ICC Evaluation Service Report (ESR) that shows compliance with *Acceptance Criteria for Spray-Applied Foam Plastic Insulation--AC377*. Based on this calculation, the overall assembly U-factor shall be determined by selecting the assembly that matches the assembly type, framing configuration, and cavity insulation from the appropriate Reference Joint Appendix JA4 table or other approved method specified in Section JA4 of the Reference Appendices.

The R-value of the installed insulation shall be based on the verified thickness at an R-value of 3.6 per inch unless an ESR is provided with compliance documentation that verifies use of other values. Approved compliance software shall make appropriate adjustments to account for the R-value and U-factor effects of the ocSPF assembly.

Nominal Thickness: ocSPF sprayed into framed cavities or on flat surfaces will expand with variable thicknesses, visibly appearing as undulations on the surface of the insulation. The average thickness of the foam insulation must meet or exceed the required R-value. Depressions in the foam insulation surface shall not be greater than 1-inch of the required thickness provided these depressions do not exceed 10% of the surface area being insulated.

Filling of Framed Assemblies: ocSPF insulation shall completely fill cavities of 2x4 inch framing or less. Cavities greater than 2x4 inch framing dimensions may be filled to the thickness that meets the required R-value used for compliance provided that the bottom and top plates of vertical framing and both ends of horizontal framing, including band and rim joists, are sprayed to completely fill the cavity adjacent to and in contact with the framing to a distance of 5.5 inches away from the framing for ocSPF insulation, or filled to the thickness meeting ASTM testing as an air barrier.

Air Barrier: ocSPF installed as an air barrier shall be a minimum of 5.5 inches in thickness; alternatively, ocSPF insulation shall be installed at a thickness that meets an air permeance no greater than 0.02 L/s-m^2 at 75 Pa pressure differential when tested in accordance to ASTM E2178 or ASTM E283.

Table 4.1.7: Required Thickness of SPF Insulation (inches) to Achieve Specified R-values

Equivalent R-Values for SPF insulation	**11**	**13**	**15**	**19**	**21**	**22**	**25**	**30**	**38**
Required thickness of ccSPF Insulation @ R5.8/inch	2.00	2.25	2.75	3.50	3.75	4.00	4.50	5.25	6.75
Required thickness of ocSPF insulation @ R3.6/inch	3.0	3.5	4.2	5.3	5.8	6.1	6.9	8.3	10.6

NOTE:

A HERS rater shall verify the installation of SPF insulation using the procedures specified in RA3.5.5 whenever R-values other than the default R-value per inch listed in Table 4.1.7 are used for compliance (see *"R-value"* in sections RA3.5.5.0.1(a) and RA3.5.5.0.1(b)).

JA4.2 Roofs and Ceilings

Table 4.2.1 – U-factors of Wood Framed Attic Roofs

Truss Spacing	R-value of Attic Insulation		Rated R-value of Continuous Insulation[1]							
			None	R-2	R-4	R-6	R-7	R-8	R-10	R-14
			A	B	C	D	E	F	G	H
16 in. OC	None	1	0.300	0.187	0.136	0.107	0.097	0.088	0.075	0.058
	R-11	2	0.079	0.068	0.060	0.053	0.051	0.048	0.044	0.037
	R-13	3	0.071	0.062	0.055	0.050	0.047	0.045	0.041	0.036
	R-19	4	0.049	0.045	0.041	0.038	0.037	0.035	0.033	0.029
	R-21	5	0.042	0.039	0.036	0.034	0.032	0.031	0.030	0.026
	R-22	6	0.043	0.039	0.037	0.034	0.033	0.032	0.030	0.027
	R-25	7	0.038	0.035	0.033	0.031	0.030	0.029	0.028	0.025
	R-30	8	0.032	0.030	0.028	0.027	0.026	0.025	0.024	0.022
	R-38	9	0.026	0.024	0.023	0.022	0.022	0.021	0.020	0.019
	R-44	10	0.021	0.020	0.019	0.019	0.018	0.018	0.017	0.016
	R-49	11	0.020	0.019	0.019	0.018	0.018	0.017	0.017	0.016
	R-60	12	0.017	0.016	0.016	0.015	0.015	0.015	0.014	0.013
24 in. OC	None	13	0.305	0.189	0.137	0.108	0.097	0.089	0.075	0.058
	R-11	14	0.076	0.066	0.058	0.052	0.050	0.047	0.043	0.037
	R-13	15	0.068	0.060	0.054	0.048	0.046	0.044	0.041	0.035
	R-19	16	0.048	0.043	0.040	0.037	0.036	0.034	0.032	0.029
	R-21	17	0.043	0.040	0.037	0.034	0.033	0.032	0.030	0.027
	R-22	18	0.041	0.038	0.036	0.033	0.032	0.031	0.029	0.026
	R-25	19	0.037	0.034	0.032	0.030	0.029	0.028	0.027	0.024
	R-30	20	0.031	0.029	0.028	0.026	0.025	0.025	0.024	0.022
	R-38	21	0.025	0.024	0.023	0.022	0.021	0.021	0.020	0.018
	R-44	22	0.021	0.020	0.019	0.019	0.018	0.018	0.017	0.016
	R-49	23	0.019	0.019	0.018	0.017	0.017	0.017	0.016	0.015
	R-60	24	0.016	0.016	0.015	0.015	0.014	0.014	0.014	0.013

Notes:

1. Continuous insulation shall be located at the ceiling, below the bottom chord of the truss and be uninterrupted by framing.
2. In climate zones 1 and 16 the insulating R-value of continuous insulation materials installed above the roofs waterproof membrane shall be multiplied by 0.8 before choosing the table column for determining assembly U-factor.

This table contains thermal performance data (U-factors) for wood framed attics where the ceiling provides the air barrier and the attic is ventilated. Wood trusses are the most common construction for low-rise residential buildings and for Type V nonresidential buildings. While the sketch shows a truss system with a flat ceiling, the data in this table may be used for scissor trusses and other non-flat trusses. If the bottom chord is not flat, then the slope should not exceed 4:12 for nonadhesive binder blown insulation. This table may also be used with composite trusses that have a wood top and bottom chord and metal struts connecting them.

For the majority of cases, values will be selected from column A of this table. Column A shall be used for the common situation where either batt or blown insulation is placed directly over the ceiling (and tapered at the edges). Builders or designers may increase thermal performance by adding a continuous insulation layer at the ceiling. The continuous insulation is typically a rigid polystyrene or polyisocyanurate foam insulation. Continuous insulation does not include the blown or batt insulation that is over the bottom chord of the truss (this is already accounted for in the U-factors published in Column A).

When this table is used manually, the R-value of continuous insulation shall be equal to or greater than the R-value published in the continuous insulation columns. For instance if the insulation is R-3, the R-2 column

shall be used. No interpolation is permitted when data from the table is selected manually. CEC approved compliance software, including those used for prescriptive compliance, may accurately account for any amount of continuous insulation or for unusual construction assemblies using Equation 4-1 and Equation 4-2.

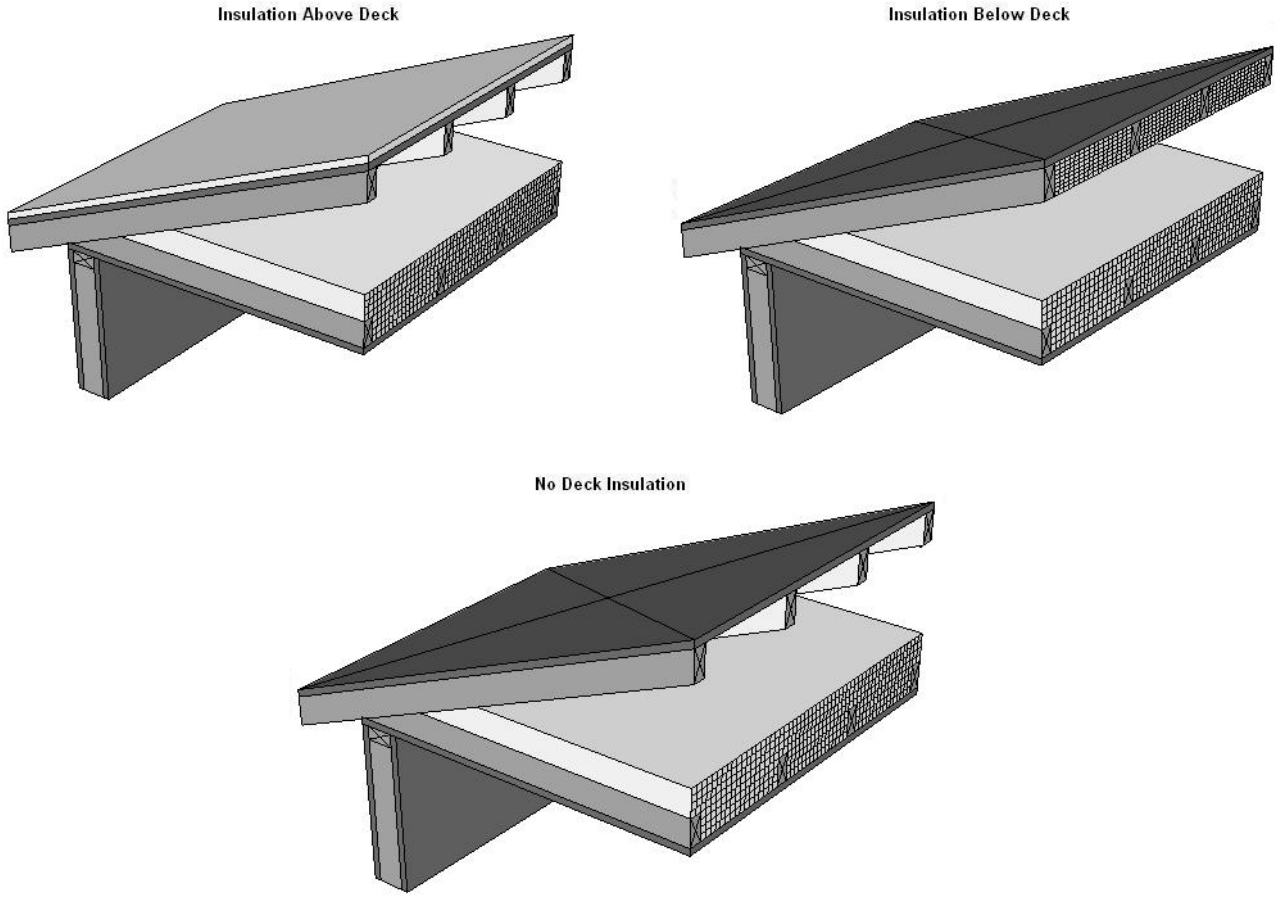

Figure 4.2.2 – Wood Framed Attic Roofs

This table shall not be used for cases where insulation is located at the roof of the attic. There are two situations where this may be done. Foamed plastic may be sprayed onto the top chord of the trusses and onto the bottom of the upper structural deck (roof). The foam expands and cures to provide an airtight barrier and continuous insulation. Another case is where a plastic membrane or netting is installed above the ceiling, (hanging below the roof deck) and either batt or blown insulation is installed over the netting. In both of these cases, the attic is sealed (not ventilated). There are a number of issues related to these insulation techniques and special CEC approval is required.

Assumptions: ~~These~~ This data ~~are~~ is calculated using the parallel path method documented in the 2009 ASHRAE Handbook of Fundamentals. These calculations assume an exterior air film of R-0.17, asphalt shingles of R-0.44 (AR02), building paper of R-0.06 (BP01), ½ inch of wood based sheathing (Custom), an attic air space (greater than 3.5 inch) with a R-0.80, the insulation / framing layer, continuous insulation (if any) 1/2 inch gypsum board (GP01) of R-0.45, and an interior air film (heat flow up) of R-0.61. Wood 2x4 framing is assumed at the ceiling level. R-13 of attic insulation is assumed between the framing members; above that level, attic insulation is uninterrupted by framing. The framing percentage is assumed to be 10 percent for 16 inch on center and 7 percent for 24 inch on center. 7.25 percent of the attic insulation above the framing members is assumed to be at half depth, due to decreased depth of insulation at the eaves.

Table 4.2.2 – U-factors of Wood Framed Rafter Roofs

Rafter Spacing	R-value of Cavity Insulation	Nominal Framing Size		Rated R-value of Continuous Insulation[5]							
				None	R-2	R-4	R-6	R-7	R-8	R-10	R-14
				A	B	C	D	E	F	G	H
16 in. OC	None	Any	**1**	0.297	0.186	0.136	0.107	0.096	0.088	0.075	0.058
	R-11[2]	2x4	**2**	0.084	0.072	0.063	0.056	0.053	0.050	0.046	0.039
	R-13[2]	2x4	**3**	0.075	0.065	0.058	0.052	0.049	0.047	0.043	0.037
	R-15[2]	2x4	**4**	0.068	0.060	0.053	0.048	0.046	0.044	0.040	0.035
	R-19[2]	2x4	**5**	0.075	0.065	0.058	0.052	0.049	0.047	0.043	0.037
	R-19[2,3]	2x4	**6**	0.062	0.055	0.050	0.045	0.043	0.041	0.038	0.033
	R-11	2x6	**7**	0.076	0.066	0.058	0.052	0.050	0.047	0.043	0.037
	R-13	2x6	**8**	0.069	0.061	0.054	0.049	0.047	0.044	0.041	0.035
	R-15	2x6	**9**	0.062	0.055	0.050	0.045	0.043	0.041	0.038	0.033
	R-19[2]	2x6	**10**	0.056	0.050	0.046	0.042	0.040	0.039	0.036	0.031
	R-21[2]	2x6	**11**	0.052	0.047	0.043	0.040	0.038	0.037	0.034	0.030
	R-19[2]	2x8	**12**	0.051	0.046	0.042	0.039	0.038	0.036	0.034	0.030
	R-21	2x8	**13**	0.048	0.044	0.040	0.037	0.036	0.035	0.032	0.029
	R-22	2x10	**14**	0.044	0.040	0.037	0.035	0.034	0.033	0.031	0.027
	R-25	2x10	**15**	0.041	0.038	0.035	0.033	0.032	0.031	0.029	0.026
	R-30[4]	2x10	**16**	0.036	0.034	0.031	0.030	0.029	0.028	0.026	0.024
	R-30	2x12	**17**	0.035	0.033	0.031	0.029	0.028	0.027	0.026	0.023
	R-38[4]	2x12	**18**	0.029	0.027	0.026	0.025	0.024	0.024	0.022	0.021
	R-38[4]	2x14	**19**	0.028	0.027	0.025	0.024	0.023	0.023	0.022	0.020
24 in. OC	None	Any	**25**	0.237	0.161	0.122	0.098	0.089	0.082	0.070	0.055
	R-11[2]	2x4	**26**	0.081	0.070	0.061	0.055	0.052	0.049	0.045	0.038
	R-13[2]	2x4	**27**	0.072	0.063	0.056	0.050	0.048	0.046	0.042	0.036
	R-15[2]	2x4	**28**	0.065	0.058	0.052	0.047	0.045	0.043	0.039	0.034
	R-19[2]	2x4	**29**	0.072	0.063	0.056	0.050	0.048	0.046	0.042	0.036
	R-19[2,3]	2x4	**30**	0.059	0.053	0.048	0.044	0.042	0.040	0.037	0.032
	R-11	2x6	**31**	0.075	0.065	0.058	0.052	0.049	0.047	0.043	0.037
	R-13	2x6	**32**	0.067	0.059	0.053	0.048	0.046	0.044	0.040	0.035
	R-15[2]	2x6	**33**	0.060	0.054	0.048	0.044	0.042	0.041	0.038	0.033
	R-19[2]	2x6	**34**	0.054	0.049	0.044	0.041	0.039	0.038	0.035	0.031
	R-21[2]	2x6	**35**	0.049	0.045	0.041	0.038	0.036	0.035	0.033	0.029
	R-19[2]	2x8	**36**	0.049	0.045	0.041	0.038	0.036	0.035	0.033	0.029
	R-21	2x8	**37**	0.046	0.042	0.039	0.036	0.035	0.034	0.032	0.028
	R-22	2x10	**38**	0.043	0.040	0.037	0.034	0.033	0.032	0.030	0.027
	R-25	2x10	**39**	0.039	0.036	0.034	0.032	0.031	0.030	0.028	0.025
	R-30[4]	2x10	**40**	0.034	0.032	0.030	0.028	0.027	0.027	0.025	0.023
	R-30	2x12	**41**	0.033	0.031	0.029	0.028	0.027	0.026	0.025	0.023
	R-38 [4]	2x12	**42**	0.028	0.027	0.025	0.024	0.023	0.023	0.022	0.020
	R-38[4]	2x14	**43**	0.027	0.026	0.024	0.023	0.023	0.022	0.021	0.020

Notes:

1. Rigid foam board used for cavity insulation must fill the entire cavity between the rafters and be sealed properly to prevent air gaps, and must be secured properly to prevent any future discrepancies in the construction assembly.

2. This assembly is only allowed where ventilation is provided between the bottom of the roof deck and the top of the insulation meeting CBC requirements or with enforcement agency official's approval of rafter attic assemblies with no ventilation air spaces.

3. This assembly requires insulation with an R-value per inch 5.6 or larger (k-factor 1.8 or less). This is board type insulation, mostly Isocyanurate. Medium density spray polyurethane foam may also be used to meet this requirement if the quality installation procedures and documentation in Reference Joint Appendix JA7 are followed, Documentation from Directory of Certified insulation materials must be provided to show compliance with this assembly.

4. Higher density fiberglass batt is needed to achieve the indicated U-factor. R-30 must be achieved with less than 8.25 inch full thickness. R-38 must be achieved with less than 10.25 inch thickness (R-30c, R-38c).

5. Continuous insulation shall be located at the ceiling or at the roof and be uninterrupted by framing. In climate zones 1 and 16 the insulating R-value of continuous insulation materials installed above the roofs waterproof membrane shall be multiplied by 0.8 before choosing the table column for determining assembly U-factor.

This table contains thermal performance data (U-factors) for wood framed rafter roofs. This is a common construction in low-rise residential buildings and in Type V nonresidential buildings. The rafters may be either flat or in a sloped application. Insulation is typically installed between the rafters. With this construction, the insulation is in contact with the ceiling and there is typically a one-inch air gap above the insulation so that moisture can be vented. Whether there is an air space above the insulation depends on local climate conditions and may not be required in some building permit jurisdictions. Filling the entire cavity of framed rafter assemblies with loose-fill mineral fiber and wool, cellulose, or ocSPF requires prior approval by the local building official.

For the majority of cases, U-factors will be selected from Column A of this table; this case covers insulation placed only in the cavity. When continuous insulation is installed either at the ceiling or at the roof, then U-factors from other columns may be selected. The continuous insulation is typically a rigid polystyrene or polyisocyanurate foam insulation, but can also include mineral wool or other suitable materials.

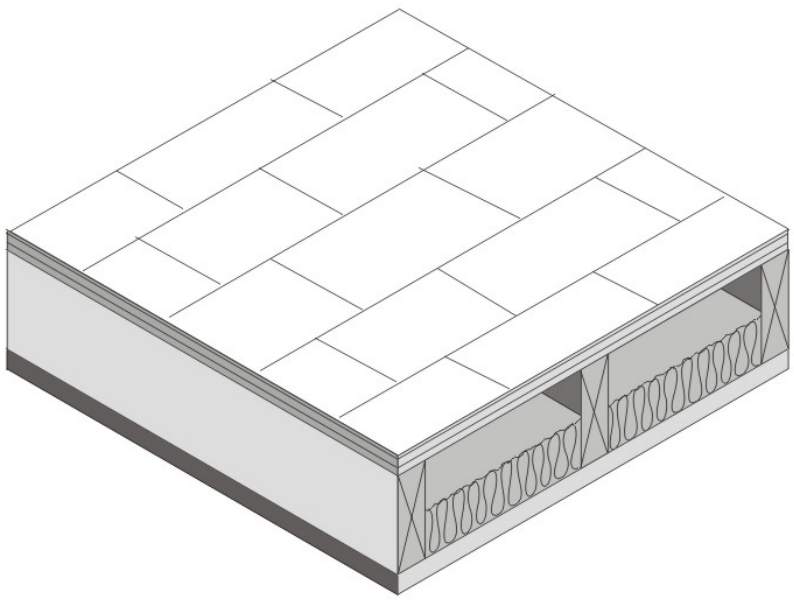

Figure4.2.3 – Wood Frame Rafter Roof

When this table is used manually, the R-value of continuous insulation shall be equal to or greater than the R-value published in the continuous insulation columns. For instance if the continuous insulation is R-3, the R-2 column shall be used. No interpolation is permitted when data from the table is used manually. CEC approved software, however, may determine the U-factor for any amount of continuous insulation and/or for layers using Equation 4-1 and Equation 4-2.

Assumptions: These data are calculated using the parallel path method documented in the 2009 ASHRAE Handbook of Fundamentals. These calculations assume an exterior air film of R-0.17, asphalt shingles of R-0.44 (AR02), building paper of R-0.06 (BP01), ½ inch of wood based sheathing (Custom), continuous insulation (optional), the insulation / framing layer with an air space of R-0.76 or R-0.80 (except for loose-fill mineral fiber and wool, cellulose, ccSPF, and ocSPF), 1/2 inch gypsum of R-0.45 (GP01), and an interior air film (heat flow up diagonally) of R-0.62. The continuous insulation may also be located at the ceiling, between the drywall and the framing. The framing percentage is assumed to be 10 percent for 16 inch OC and 7 percent for 24 inch. OC. The thickness of framing members is assumed to be the actual size of 3.50, 5.50, 7.25, 9.25, and 11.25 inches for 2x4, 2x6, 2x8, 2x10, and 2x12 nominal sizes. High-density batt insulation is assumed to be 8.5 inch thick for R-30 and 10.5 inch thick for R-38. The R-value of sprayed foam and cellulose insulation is assumed to be R-3.6 per inch.

Table 4.2.3 – U-factors of Structurally Insulated Panels (SIPS) Roof/Ceilings

Wood Framing Connection Type (spline)	Insulation Core R-value[1]	Typical Panel Thickness		Rated R-value of Continuous Insulation [4,5]					
				None	R-2	R-4	R-5	R-7	R-8
				A	B	C	D	E	F
OSB	R-22	6.5 in	1	0.041	0.038	0.035	0.034	0.032	0.031
Single 2x	R-22	6.5 in	2	0.044	0.040	0.037	0.036	0.033	0.032
Double 2x	R-22	6.5 in	3	0.046	0.042	0.038	0.037	0.034	0.033
I-joist	R-22	6.5 in	4	0.043	0.039	0.036	0.035	0.033	0.032
OSB	R-28	8.25 in	5	0.033	0.031	0.029	0.028	0.027	0.026
Single 2x	R-28	8.25 in	6	0.034	0.032	0.030	0.029	0.027	0.027
Double 2x	R-28	8.25 in	7	0.037	0.034	0.031	0.030	0.028	0.028
I-joist	R-28	8.25 in	8	0.033	0.310	0.029	0.028	0.027	0.026
OSB	R-33[2]	6.5 in	9	0.030	0.027	0.026	0.025	0.024	0.023
Single 2x	R-33[2]	6.5 in	10	0.031	0.029	0.027	0.026	0.025	0.024
Double 2x	R-33[2]	6.5 in	11	0.034	0.031	0.029	0.028	0.026	0.025
I-joist	R-33[2]	6.5 in	12	0.031	0.028	0.027	0.026	0.025	0.024
OSB	R-36	10.25 in	13	0.026	0.025	0.024	0.023	0.022	0.022
Single 2x	R-36	10.25 in	14	0.028	0.026	0.025	0.024	0.023	0.022
Double 2x	R-36	10.25 in	15	0.029	0.028	0.026	0.025	0.024	0.023
I-joist	R-36	10.25 in	16	0.027	0.025	0.024	0.023	0.022	0.022
OSB	R-44	12.25 in	17	0.021	0.020	0.019	0.019	0.018	0.018
Single 2x	R-44	12.25 in	18	0.023	0.022	0.021	0.021	0.020	0.019
Double 2x	R-44	12.25 in	19	0.025	0.023	0.022	0.022	0.021	0.020
I-joist	R-44	12.25 in	20	0.022	0.021	0.020	0.020	0.019	0.019
OSB	R-55[3]	10.25 in	21	0.017	0.016	0.016	0.016	0.016	0.016
Single 2x	R-55[3]	10.25 in	22	0.019	0.018	0.018	0.018	0.017	0.016
Double 2x	R-55[3]	10.25 in	23	0.021	0.020	0.019	0.019	0.018	0.017
I-joist	R-55[3]	10.25 in	24	0.018	0.017	0.017	0.017	0.016	0.016
Steel Framing	R-14	48 in	25	0.075	0.065	0.058	0.055	0.049	0.047
	R-22	48 in	26	0.057	0.051	0.046	0.044	0.041	0.039
	R-28	48 in	27	0.047	0.043	0.040	0.039	0.035	0.034
	R-36	48 in	28	0.043	0.040	0.037	0.036	0.033	0.032

NOTES:

1. The insulation R-value must be at least R-21.7 in order to use this table. This table assumes moulded expanded polystyrene (EPS) unless noted
   otherwise. Although other insulation types are used by some SIP manufacturers, such as polyurethane and extruded expanded insulation (XPS),
   EPS is the most common insulation used in SIP construction.
2. R-33.2 is achievable using polyurethane insulation in 6.5" panels.
3. R-55.3 is achievable using polyurethane insulation in 10.25" panels.
4. Continuous insulation shall be at least R-2 and may be installed on either the inside or the exterior of the roof/ceiling.
5. In climate zones 1 and 16 the insulating R-value of continuous insulation materials installed above the roof waterproof membrane shall be
   multiplied times 0.8 before choosing the table column for determining assembly U-factor.

Structural insulated panels (SIPs) consist of a rigid insulation core, securely bonded between two structural facings, to form a structural sandwich panel. SIPs are considered a non-framed assembly usually with little or no structural framing that penetrates the insulation layer, resulting in less thermal bridging across the insulation when compared to a conventional framed assembly.

This table gives U-factors for structurally insulated panels used in ceiling and roof constructions. Data is provided for three variations of this system. The system labeled “Wood Framing” uses wood spacers to separate the plywood or OSB boards and provide a means to connect the panels with mechanical fasteners. The system labeled “Steel Framing” uses steel framing members and mechanical fasteners at the joints. The system labeled “OSB Spline” uses splines to connect the panels so that framing members do not penetrate the insulation.

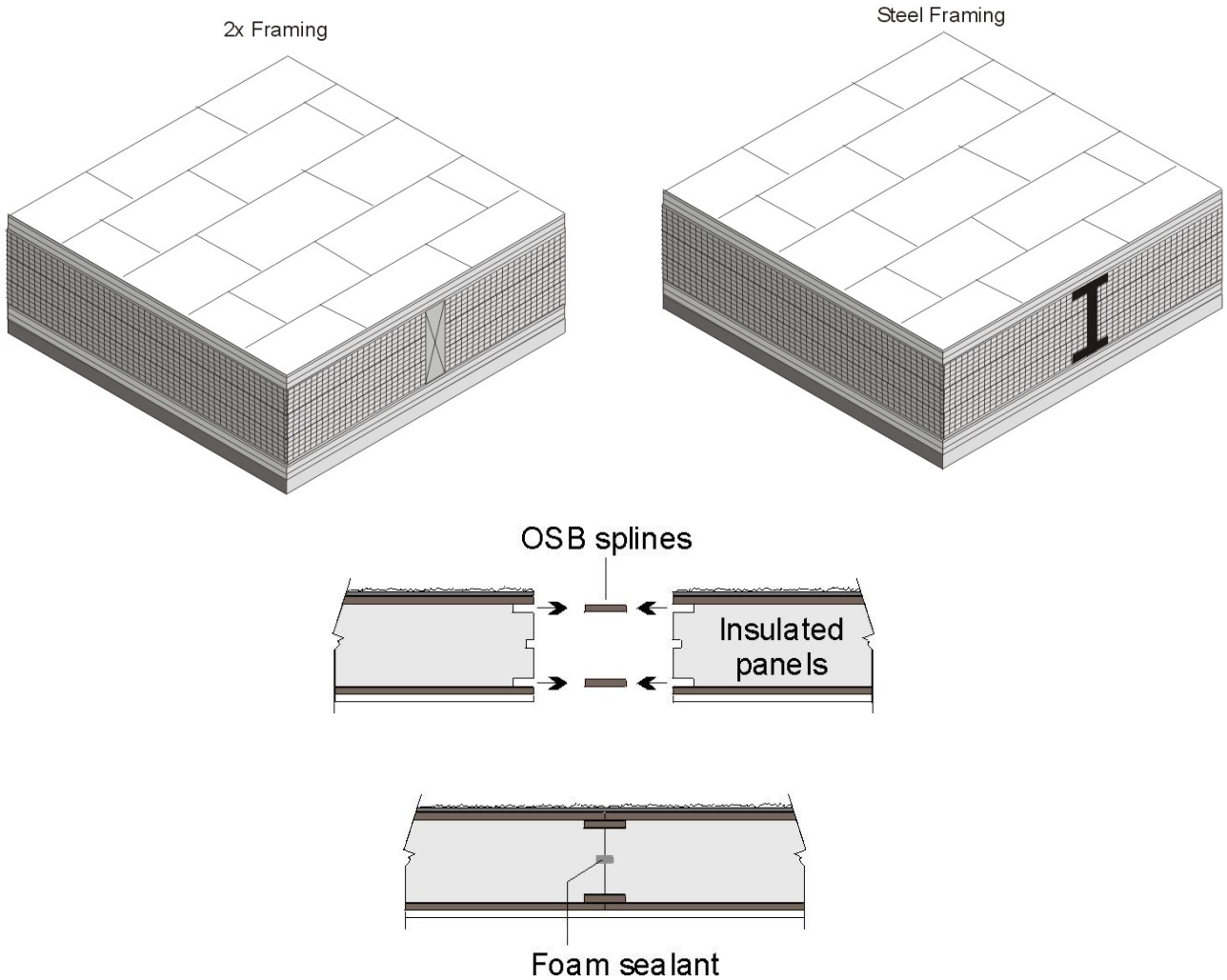

Figure 4.2.4 – SIPS Roof/Ceiling

Data from Column A will be used in most cases, since it is quite unusual to add continuous insulation to a panel that is basically all insulation anyway. If insulation is added, however, then the U-factor is selected from one of the other columns. If the tables are used manually, then the installed insulation shall have a thermal resistance at least as great as the column selected. When the table is used with CEC approved compliance software, then the R-value of any amount of continuous insulation may be accounted for along with the thermal resistance of special construction layers may be accounted for using Equation 4-1 and Equation 4-2.

Assumptions: The wood framing and OSB spline data are calculated using the parallel path method documented in the 2009 ASHRAE Handbook of Fundamentals. Assemblies with metal framing are calculated using the ASHRAE Zone Calculation Method which is also documented in the 2005 ASHRAE Handbook of Fundamentals. These calculations assume an exterior air film of R-0.17, asphalt shingles of R-0.44 (AR02), building paper of R-0.06 (BP01), 7/16 inch of OSB of R-0.69, the rigid insulation of R-3.85 per inch, another layer of 7/16 inch of OSB, ½ inch gypsum board of R-0.45 (GP01), an R-value of 0.99 per inch is assumed for the wood frame and an interior air film (heat flow up diagonally) of R-0.62. If an additional layer of insulation is used, this may be installed on either the interior or exterior of the SIPS panel assembly.

Table 4.2.4 – U-factors of Metal Framed Attic Roofs

Spacing	Nominal Framing Size	Cavity Insulation R-Value:		Rated R-value of Continuous Insulation[1]							
				R-0	R-2	R-4	R-6	R-7	R-8	R-10	R-14
				A	B	C	D	E	F	G	H
16 in. OC	Any	None	**1**	0.328	0.198	0.142	0.111	0.100	0.091	0.077	0.059
	2 x 4	R-11	**2**	0.126	0.101	0.084	0.072	0.067	0.063	0.056	0.046
	(3.65 in.)	R-13	**3**	0.121	0.097	0.082	0.070	0.066	0.061	0.055	0.045
		R-19	**4**	0.071	0.062	0.055	0.050	0.047	0.045	0.042	0.036
		R-21	**5**	0.063	0.056	0.050	0046	0.044	0.042	0.039	0.033
		R-22	**6**	0.059	0.053	0.048	0.044	0.042	0.040	0.037	0.032
		R-25	**7**	0.051	0.046	0.042	0.039	0.038	0.036	0.034	0.030
		R-30	**8**	0.041	0.038	0.035	0.033	0.032	0.031	0.029	0.026
		R-38	**9**	0.031	0.029	0.028	0.026	0.025	0.025	0.024	0.022
		R-44	**10**	0.027	0.026	0.024	0.023	0.023	0.022	0.021	0.020
		R-49	**11**	0.024	0.023	0.022	0.021	0.021	0.020	0.019	0.018
		R-60	**12**	0.019	0.018	0.018	0.017	0.017	0.016	0.016	0.015
24 in. OC	Any	None	**13**	0.324	0.197	0.141	0.110	0.099	0.090	0.076	0.059
	2 x 4	R-11	**14**	0.109	0.089	0.076	0.066	0.062	0.058	0.052	0.043
	(3.65 in.)	R-13	**15**	0.103	0.085	0.073	0.064	0.060	0.056	0.051	0.042
		R-19	**16**	0.065	0.058	0.052	0.047	0.045	0.043	0.039	0.034
		R-21	**17**	0.058	0.052	0.047	0.043	0.041	0.040	0.037	0.032
		R-22	**18**	0.055	0.050	0.045	0.041	0.040	0.038	0.035	0.031
		R-25	**19**	0.047	0.043	0.040	0.037	0.035	0.034	0.032	0.028
		R-30	**20**	0.039	0.036	0.034	0.032	0.031	0.030	0.028	0.025
		R-38	**21**	0.030	0.028	0.027	0.025	0.025	0.024	0.023	0.021
		R-44	**22**	0.026	0.025	0.024	0.022	0.022	0.022	0.021	0.019
		R-49	**23**	0.023	0.022	0.021	0.020	0.020	0.019	0.019	0.017
		R-60	**24**	0.019	0.018	0.018	0.017	0.017	0.016	0.016	0.015

Notes:

1 Continuous insulation shall be located at the ceiling or at the roof and be uninterrupted by framing.

2. In climate zones 1 and 16 the insulating R-value of continuous insulation materials installed above the roofs waterproof membrane shall be multiplied by 0.8 before choosing the table column for determining assembly U-factor.

This table contains U-factors for metal-framed attic roofs, where the ceiling is the air barrier and the attic is ventilated. This construction assembly is similar to those that are covered by Table 4.2.1, except that metal framing members are substituted for the wood-framing members. The top chord of the truss is typically sloped, while the bottom chord is typically flat. Data from this table may be used for cases where the bottom chord of the truss is sloped. If the bottom chord slopes more than 4:12, nonadhesive binder blown insulation must not be used.

For the majority of cases, values will be selected from column A of this table. Column A applies for the common situation where either batt or blown insulation is placed directly over the ceiling. Builders or designers may increase thermal performance by adding a continuous insulation layer at the ceiling. The continuous insulation is typically a rigid polystyrene or polyisocyurnate foam insulation. Continuous insulation does not include the blown or batt insulation that is over the bottom chord of the truss (this is already accounted for in the first column data).

When this table is used manually, the R-value of continuous insulation shall be equal to or greater than the R-value published in the continuous insulation columns. No interpolation is permitted when data from the table is used manually. CEC approved software, however, may determine the U-factor for any amount of continuous insulation and for unusual construction layers using Equation 4-1 and Equation 4-2.

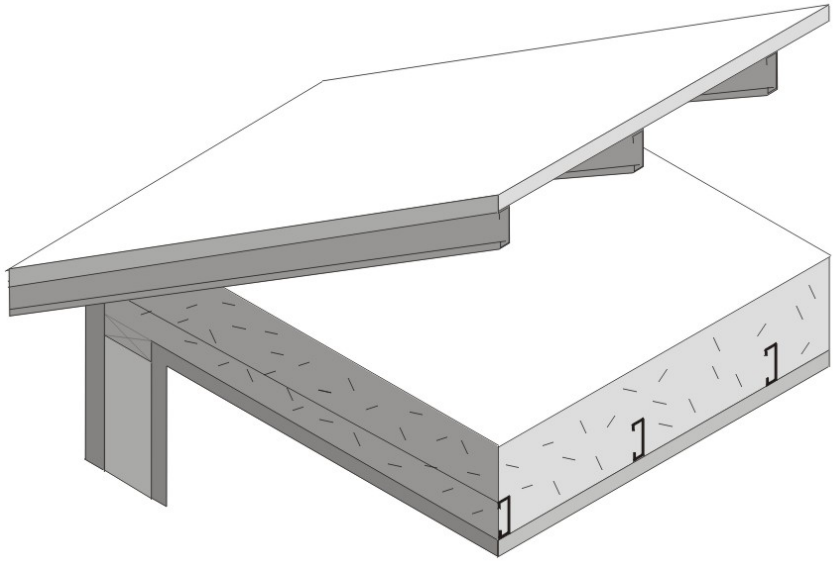

Figure 4.2.5 – Metal Framed Attic Roofs

Assumptions: These data are calculated using the zone method calculation documented in the 2009 ASHRAE Handbook of Fundamentals. These calculations assume an exterior air film of R-0.17, asphalt shingles of R-0.44 (AR02), building paper of R-0.06 (BP01), ½ inch of wood based sheathing (Custom), the attic air space (greater than 3.5 inch) of R-0.80, the insulation / framing layer, continuous insulation (if any) 1/2 inch gypsum of R-0.45 (GP01), and an interior air film (heat flow up) of R-0.61. The framing percentage

is assumed to be 10 percent for 16 inch on center and 7 percent for 24 inch on center 7.25 percent of the attic insulation above the framing members is assumed to be at half depth, due to decreased depth of insulation at the eaves. Steel framing has 1.5 inch flange and is 0.0747 inch thick steel with no knockouts. U-factors calculated using EZ Frame 2.0.

Table 4.2.5 – U-factors of Metal Framed Rafter Roofs

Spacing	R-Value of Insulation Between Framing	Nominal Framing Size		Rated R-value of Continuous Insulation							
				R-0	R-2	R-4	R-6	R-7	R-8	R-10	R-14
				A	B	C	D	E	F	G	H
16 in. OC	None	Any	**1**	0.325	0.197	0.141	0.110	0.099	0.090	0.076	0.059
	R-11[2]	2x4	**2**	0.129	0.103	0.085	0.073	0.068	0.063	0.056	0.046
	R-13[2]	2x4	**3**	0.121	0.097	0.082	0.070	0.066	0.061	0.055	0.045
	R-15[2]	2x4	**4**	0.115	0.093	0.079	0.068	0.064	0.060	0.053	0.044
	R-19[2,3]	2x4	**5**	0.121	0.097	0.082	0.070	0.066	0.061	0.055	0.045
	R-11	2x6	**6**	0.123	0.099	0.082	0.071	0.066	0.062	0.055	0.045
	R-13	2x6	**7**	0.115	0.093	0.079	0.068	0.064	0.060	0.053	0.044
	R-15[2]	2x6	**8**	0.101	0.084	0.072	0.063	0.059	0.056	0.050	0.042
	R-19[2]	2x6	**9**	0.100	0.083	0.071	0.063	0.059	0.056	0.050	0.042
	R-19[2]	2x8	**10**	0.096	0.081	0.069	0.061	0.057	0.054	0.049	0.041
	R-21	2x8	**11**	0.093	0.078	0.068	0.060	0.056	0.053	0.048	0.040
	R-25	2x10	**12**	0.084	0.072	0.063	0.056	0.053	0.050	0.046	0.039
	R-30[4]	2x10	**13**	0.079	0.068	0.060	0.054	0.051	0.048	0.044	0.038
	R-30	2x12	**14**	0.076	0.066	0.058	0.052	0.050	0.047	0.043	0.037
	R-38 [4]	2x12	**15**	0.071	0.062	0.055	0.050	0.047	0.045	0.042	0.036
	R-38 [4]	2x14	**16**	0.068	0.060	0.053	0.048	0.046	0.044	0.040	0.035
24 in. OC	None	Any	**22**	0.322	0.196	0.141	0.110	0.099	0.090	0.076	0.058
	R-11[2]	2x4	**23**	0.111	0.091	0.077	0.067	0.062	0.059	0.053	0.043
	R-13[2]	2x4	**24**	0.102	0.085	0.072	0.063	0.060	0.056	0.050	0.042
	R-15[2]	2x4	**25**	0.096	0.081	0.069	0.061	0.057	0.054	0.049	0.041
	R-19[2,3]	2x4	**26**	0.102	0.085	0.072	0.063	0.060	0.056	0.050	0.042
	R-11	2x6	**27**	0.107	0.088	0.075	0.065	0.061	0.058	0.052	0.043
	R-13	2x6	**28**	0.099	0.083	0.071	0.062	0.058	0.055	0.050	0.041
	R-15[2]	2x6	**29**	0.086	0.073	0.064	0.057	0.054	0.051	0.046	0.039
	R-19[2]	2x6	**30**	0.083	0.071	0.062	0.055	0.052	0.050	0.045	0.038
	R-19[2]	2x8	**31**	0.080	0.0690	0.061	0.054	0.051	0.049	0.044	0.038
	R-21	2x8	**32**	0.076	0.066	0.058	0.052	0.050	0.047	0.043	0.037
	R-25	2x10	**33**	0.068	0.060	0.053	0.048	0.046	0.044	0.040	0.035
	R-30[4]	2x10	**34**	0.063	0.056	0.050	0.046	0.044	0.042	0.039	0.033
	R-30	2x12	**35**	0.061	0.054	0.049	0.045	0.043	0.041	0.038	0.033
	R-38[4]	2x12	**36**	0.055	0.050	0.045	0.041	0.040	0.038	0.035	0.031
	R-38[4]	2x14	**37**	0.053	0.048	0.044	0.040	0.039	0.037	0.035	0.030

Notes:

1. Rigid foam board used for cavity insulation must fill the entire cavity between the rafters and be sealed properly to prevent air gaps, and must be secured properly to prevent any future discrepancies in the construction assembly.

2. This assembly is only allowed where ventilation is provided between the bottom of the roof deck and the top of the insulation meeting, CBC requirements or enforcement agency officials approval of rafter attic assemblies with no ventilation air spaces.

3. This assembly requires insulation with an R-value per inch 5.6 or larger (k-factor 1.8 or less). This is board type insulation, mostly Isocyanurate. Medium density spray polyurethane foam may also be used to meet this requirement if the quality installation procedures and documentation in Joint Appendix 7 are followed. Documentation from Directory of Certified insulation materials must be provided to show compliance with this assembly.

4. Higher density fiberglass batt is needed to achieve the indicated U-factor. R-30 must be achieved with less than 8.25 inch full thickness. R-38 must be achieved with less than 10.25 inch thickness (R-30c, R-38c).

This table contains pre-calculated U-factors for metal-framed rafter roofs where the ceiling is the air barrier. This construction assembly is similar to that covered by Table 4.2.2 except that metal framing members are substituted for the wood-framing members. The rafters may be either flat or in a sloped application. Insulation is typically installed between the rafters. With this construction, the insulation is in contact with the ceiling and there is typically a one-inch air gap above the insulation so that moisture can be vented. Whether there is an air space above the insulation depends on local climate conditions and may not be required in some building permit jurisdictions.

U-factors are selected from Column A of this table when there is no continuous insulation. When continuous insulation is installed either at the ceiling or at the roof, then U-factors from other columns may be selected. The continuous insulation is typically a rigid polystyrene or polyisocyanurate foam insulation, but can also include mineral wool or other suitable materials.

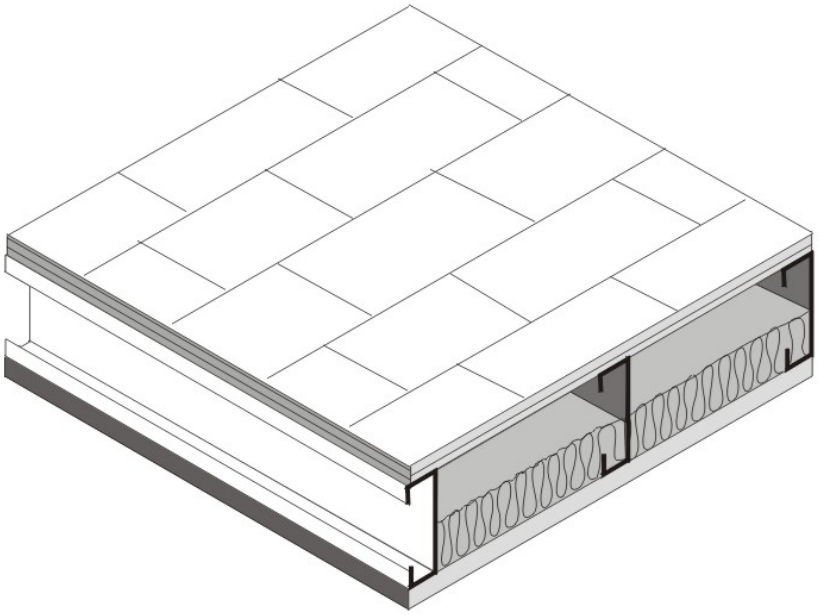

Figure 4.2.6 – Metal Framed Rafter Roof

When this table is used manually, the R-value of continuous insulation shall be equal to or greater than the R-value published in the continuous insulation columns. For instance if the insulation is R-3, the R-2 column shall be used. No interpolation is permitted when data from the table is used manually. ~~CEC~~ Commission approved software, however, may determine the U-factor for any amount of continuous insulation and/or for unusual construction layers using Equation 4-1 and Equation 4-2.

Assumptions: These data are calculated using the zone calculation method documented in the 2009 ASHRAE Handbook of Fundamentals. These calculations assume an exterior air film of R-0.17, asphalt shingles of R-0.44 (AR02), building paper of R-0.06 (BP01), ½ inch of wood based sheathing (Custom), the insulation / framing layer, ½ inch gypsum of R-0.45 (GP01), and an interior air film (heat flow up diagonally) of R-0.62 The continuous insulation may either be located at the ceiling or over the structural deck. The thickness of framing members is assumed to be 3.50, 5.50, 7.25, 9.25, and 11.25 inch for 2x4, 2x6, 2x8, 2x10, and 2x12 nominal sizes. High-density batt insulation is assumed to be 8.5 in. thick for R-30 and 10.5 in thick for R-38. Framing spacing is 10 percent for 16 inches on center and 7 percent for 24 inches on center. Steel framing has 1.5 inch flange and is 0.075 inch thick steel with no knockouts. U-factors calculated using EZ Frame 2.0.

Table 4.2.6 –U-factors for Span Deck and Concrete Roofs

			R-value of Continuous Insulation									
	Concrete Topping Over		None	R-4	R-6	R-8	R-10	R-12	R-15	R-20	R-25	R-30
Fireproofing	**Metal Deck**		**A**	**B**	**C**	**D**	**E**	**F**	**G**	**H**	**I**	**J**
Yes	None	**1**	0.348	0.145	0.113	0.092	0.078	0.067	0.056	0.044	0.036	0.030
	2 in.	**2**	0.324	0.141	0.110	0.090	0.076	0.066	0.055	0.043	0.036	0.030
	4 in.	**3**	0.302	0.137	0.107	0.088	0.075	0.065	0.055	0.043	0.035	0.030
	6 in.	**4**	0.283	0.133	0.105	0.087	0.074	0.064	0.054	0.042	0.035	0.030
No	None	**5**	0.503	0.167	0.125	0.100	0.083	0.071	0.059	0.045	0.037	0.031
	2 in.	**6**	0.452	0.161	0.122	0.098	0.082	0.070	0.058	0.045	0.037	0.031
	4 in.	**7**	0.412	0.156	0.119	0.096	0.080	0.069	0.057	0.045	0.036	0.031
	6 in.	**8**	0.377	0.150	0.116	0.094	0.079	0.068	0.057	0.044	0.036	0.031

1. In climate zones 1 and 16 the insulating R-value of continuous insulation materials installed above the roof waterproof membrane shall be multiplied by 0.8 before choosing the table column for determining assembly U-factor.

The constructions in this table are typical of Type I and Type II steel framed or concrete nonresidential buildings. The construction consists of a metal deck with or without a concrete topping. It may also be used for a metal deck or even wood deck ceiling as long as the insulation is continuous. Fireproofing may be sprayed onto the underside of the metal deck; it also covers steel structural members. Insulation is typically installed above the structural deck and below the waterproof membrane. This table may also be used for reinforced concrete roofs that do not have a metal deck. In this case, the fireproofing will typically not be installed and choices from the table should be made accordingly.

When this table is used manually, the R-value of continuous insulation shall be equal to or greater than the R-value published in the continuous insulation columns. No interpolation is permitted when data from the table is used manually. ~~CEC~~ Commission approved compliance software, however, may determine the U-factor for any amount of continuous insulation and for unusual construction layers using Equation 4-1 and Equation 4-2. If the data is adjusted using Equation 4-2, the user shall take credit for a ceiling and the air space above the ceiling only if the ceiling serves as an air barrier. Suspended or T-bar ceilings do not serve as air barriers.

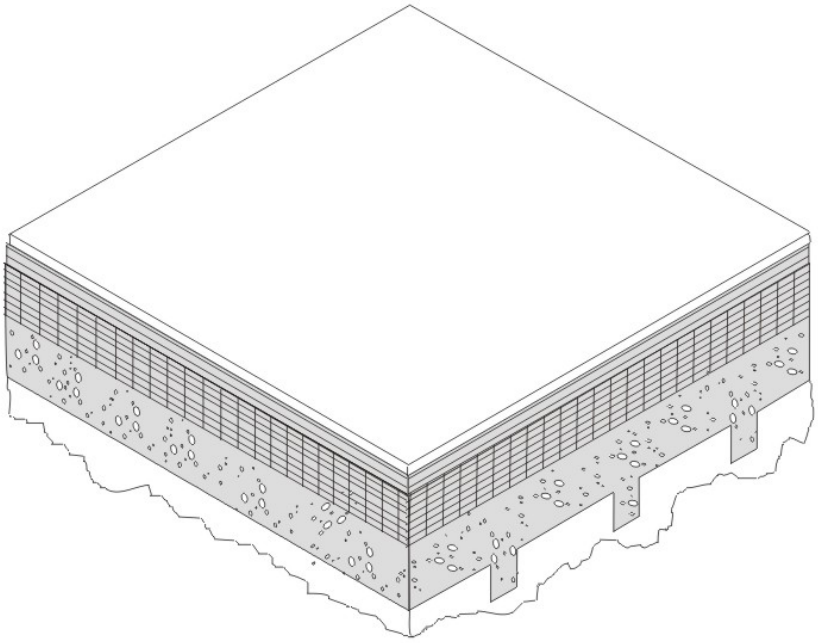

Figure 4.2.7 – Span Deck and Concrete Roof

Assumptions: These calculations are made using the parallel path method documented in the 2009 ASHRAE Handbook of Fundamentals. The assembly is assumed to consist of an exterior air film of R-0.17, a single ply roofing membrane (R-0.15), protective board (R-1.06), continuous insulation (if any), concrete topping with a density of 120 lb/ft and an R-value of 0.11 per inch (if any), metal span deck (negligible), and fireproofing (R-0.88). While a suspended ceiling typically exists below the structure, this is not considered part of the construction assembly therefore the same U-values are used for assemblies with or without suspended ceilings. The fireproofing is assumed to be equivalent to 60 lb/ft³ concrete with a resistance of 0.44 per inch.

Table 4.2.7 – U-factors for Metal Building Roofs

Insulation System	R-Value of Insulation		Rated R-value of Continuous Insulation									
			R-0	R-4	R-6	R-8	R-10	R-12	R-15	R-20	R-25	R-30
			A	**B**	**C**	**D**	**E**	**F**	**G**	**H**	**I**	**J**
Screw Down Roofs (no Thermal Blocks)[2]	None	**1**	1.280	0.209	0.147	0.114	0.093	0.078	0.063	0.048	0.039	0.032
	R-10	**2**	0.153	0.095	0.080	0.069	0.060	0.054	0.046	0.038	0.032	0.027
	R-11	**3**	0.139	0.089	0.076	0.066	0.058	0.052	0.045	0.037	0.031	0.027
	R-13	**4**	0.130	0.086	0.073	0.064	0.057	0.051	0.044	0.036	0.031	0.027
	R-19	**5**	0.098	0.070	0.062	0.055	0.049	0.045	0.040	0.033	0.028	0.025
Standing Seam Roof with Single Layer of Insulation Draped over Purlins and Compressed. Thermal blocks at supports.[2]	R-10	**6**	0.097	0.070	0.061	0.055	0.049	0.045	0.040	0.033	0.028	0.025
	R-11	**7**	0.092	0.067	0.059	0.053	0.048	0.044	0.039	0.032	0.028	0.024
	R-13	**8**	0.083	0.062	0.055	0.050	0.045	0.042	0.037	0.031	0.027	0.024
	R-19	**9**	0.065	0.052	0.047	0.043	0.039	0.037	0.033	0.028	0.025	0.022
Standing Seam Roof with Double Layer of Insulation.[3]Thermal blocks at supports.[2]	R-10 + R-10	**10**	0.063	0.050	0.046	0.042	0.039	0.036	0.032	0.028	0.024	0.022
	R-10 + R-11	**11**	0.061	0.049	0.045	0.041	0.038	0.035	0.032	0.027	0.024	0.022
	R-11 + R-11	**12**	0.060	0.048	0.044	0.041	0.038	0.035	0.032	0.027	0.024	0.021
	R-10 + R-13	**13**	0.058	0.047	0.043	0.040	0.037	0.034	0.031	0.027	0.024	0.021
	R-11 + R-13	**14**	0.057	0.046	0.042	0.039	0.036	0.034	0.031	0.027	0.024	0.021
	R-13 + R-13	**15**	0.055	0.045	0.041	0.038	0.035	0.033	0.030	0.026	0.023	0.021
	R-10 + R-19	**16**	0.052	0.043	0.040	0.037	0.034	0.032	0.029	0.025	0.023	0.020
	R-11 + R-19	**17**	0.051	0.042	0.039	0.036	0.034	0.032	0.029	0.025	0.022	0.020
	R-13 + R-19	**17**	0.049	0.041	0.038	0.035	0.033	0.031	0.028	0.025	0.022	0.020
	R-19 + R-19	**18**	0.046	0.039	0.036	0.034	0.032	0.030	0.027	0.024	0.021	0.019
Filled Cavity with Thermal Blocks[2, 4]	R19 + R-10	**19**	0.041	0.035	0.033	0.031	0.029	0.027	0.025	0.023	0.020	0.018

Notes:

1. A roof must have metal purlins no closer than 4 ft on center to use this table. If the roof deck is attached to the purlins more frequently than 12 in oc, 0.008 must be added to the U-factors in this table.
2. Thermal blocks are an R-5 of rigid insulation, which extends 1" beyond the width of the purlin on each side.
3. Multiple R-values are listed in order from outside to inside. First layer is parallel to the purlins, and supported by a system; second layer is laid on top of the purlins.
4. In climate zones 1 and 16 the insulating R-value of continuous insulation materials installed above the roof waterproof membrane shall be multiplied times 0.8 before choosing the table column for determining assembly U-factor.

The U-factors in this table are intended for use with metal building roofs. This type of construction is typical for manufacturing and warehouse facilities, but is used for other building types as well. The typical method of insulating this type of building is to drape vinyl backed fiberglass insulation over the metal purlins before the metal deck is attached with metal screws. With this method, the insulation is compressed at the supports, reducing its effectiveness. The first part of the table contains values for this insulation technique. The second section of the table has data for the case when a thermal block is used at the support. The insulation is still compressed, but the thermal block, which generally consists of an 8 inch wide strip of foam insulation, improves the thermal performance. The third section of the table deals with systems that involve two layers of insulation.

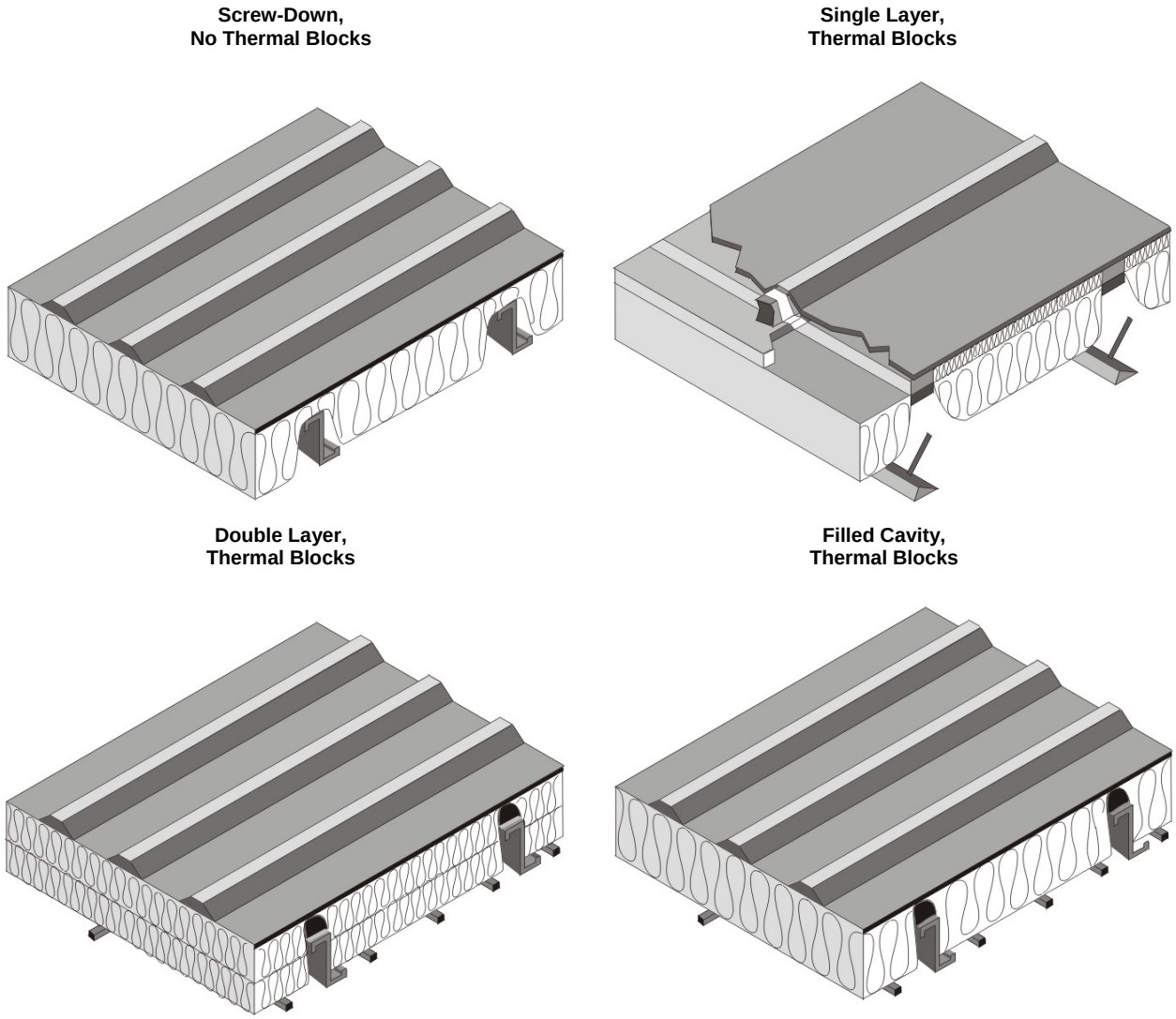

Figure 4.2.8 – Metal Building Roofs

For the majority of cases, values will be selected from column A of this table. Builders or designers may increase thermal performance by adding a continuous insulation layer between the metal decking and the structural supports. The continuous insulation is typically a rigid polystyrene or polyisocyanurate foam insulation.

When this table is used manually, the R-value of continuous insulation shall be equal to or greater than the R-value published in the continuous insulation columns. No interpolation is permitted when data from the table is used manually. ~~CEC~~ Commission approved compliance software, however, may determine the U-factor for any amount of continuous insulation using Equation 4-1.

Assumptions: Data in Column A of this table is taken from the ASHRAE/IESNA Standard 90.1-2004, Appendix A. The data is also published in the NAIMA *Compliance for Metal Buildings*, 1997.

Table 4.2.8 – U-factors for Insulated Ceiling with Removable Panels

R-value of Insulation Over Suspended Ceiling		U-factor A
None	**1**	0.304
7	**2**	0.152
11	**3**	0.132
13	**4**	0.126
19	**5**	0.113
21	**6**	0.110
22	**7**	0.109
30	**8**	0.102
38	**9**	0.098
49	**10**	0.094
60	**11**	0.092

This table includes U-factors for the case of insulation placed over suspended ceilings. This situation is only permitted for a combined floor area no greater than 2,000 square feet in an otherwise unconditioned building, and when the average height of the space between the ceiling and the roof over these spaces is greater than 12 feet. The suspended ceiling does not provide an effective air barrier and leakage is accounted for in the calculations.

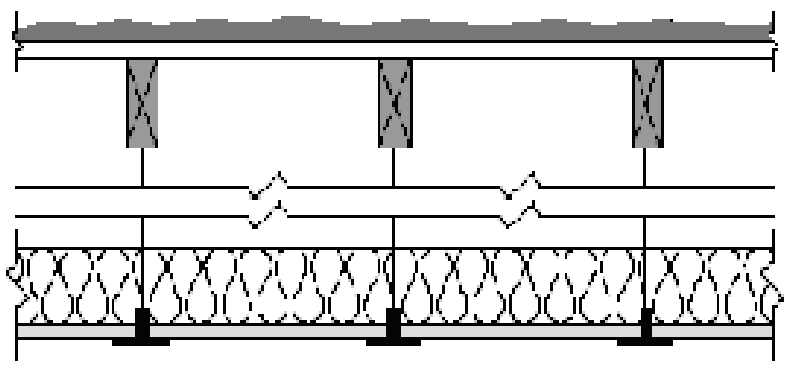

Figure 4.2.9 – Insulated Ceiling with Removable Panels

Assumptions: These calculations assume an exterior air film of R-0.17, a built-up roof of R-0.33 (BR01), ¾ inch wood based sheathing (Custom), a twelve foot air space of R-0.80, the insulation (for the insulated portion), removable ceiling panels with a R-0.50 and an interior air film (heat flow up) of R-0.61. 75 percent of the ceiling is assumed covered by insulation and the remainder is not insulated. The uninsulated portion includes lighting fixtures and areas where the insulation is not continuous. A correction factor of 0.005 is added to the resulting U-factor to account for infiltration through the suspended ceiling and lighting fixtures.

Table 4.2.9 – U-factors of Insulated Metal Panel Roofs and Ceilings

Panel Thickness		U-factor (Btu/^{0}F-ft^2) A
2”	**1**	0.079
2 ½”	**2**	0.064
3”	**3**	0.054
4”	**4**	0.041
5”	**5**	0.033
6”	**6**	0.028

This table contains thermal performance data (U-factors) for foamed-in-place, insulated metal panels consisting of liquid polyurethane or polyisocyanurate injected between metal skins in individual molds or on fully automated production lines. Metal building construction is the most common application for this product where the metal panel is fastened to the frame of the structure. This table can only be used for insulated panels that are factory built. This table does not apply to panels that utilize polystyrene, or to field applied products such as spray applied insulations.

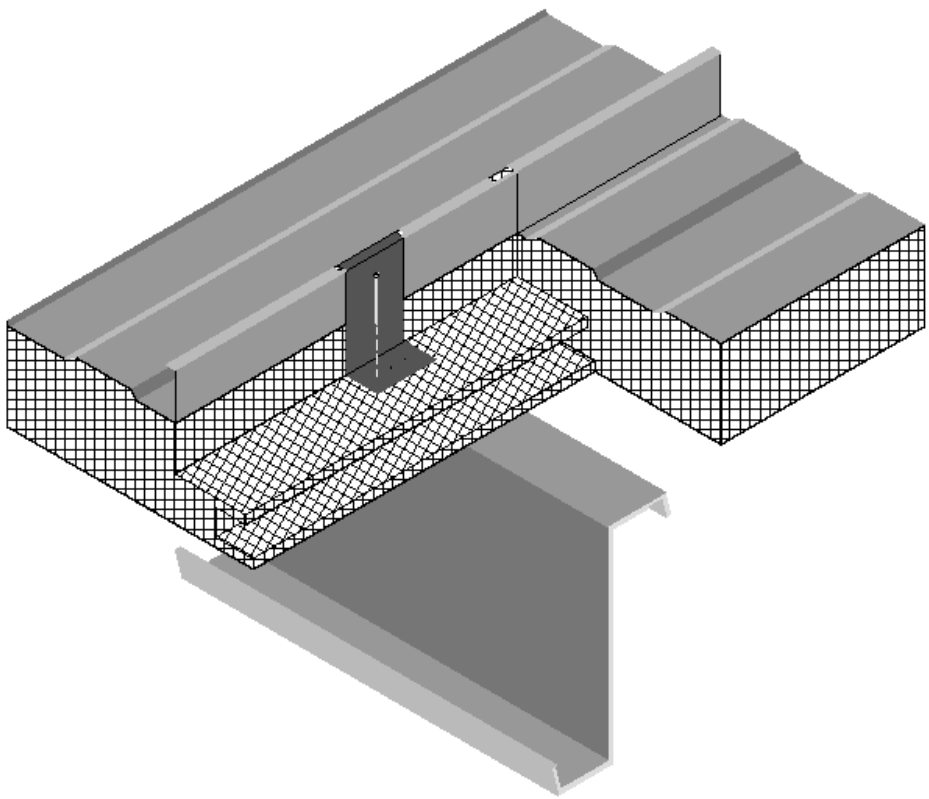

Figure 4.2.9 –Insulated Metal Panel Roofs

Assumptions: These data are calculated using the parallel path method documented in the 2009 ASHRAE Handbook of Fundamentals. These calculations assume an exterior air film of R-0.17, light gauge metal exterior of R-0.0747, continuous insulation R-5.9 per inch, light gauge metal interior of 0.0747 inch thickness and an interior air film (heat flow up) of R-0.61. The panels are assumed to be continuous with no framing penetration. The R-value of the light gauge metal is negligible.

JA4.3 Walls

Table 4.3.1 – U-factors of Wood Framed Walls

Spacing	Cavity Insulation	Nominal Framing Size		Rated R-value of Continuous Insulation [2]							
				R-0	R-2	R-4	R-5	R-6	R-7	R-8	R-10
				A	B	C	D	E	F	G	H
16 in. OC	None	Any	1	0.356	0.209	0.146	0.127	0.113	0.101	0.092	0.078
	R-11	2x4	2	0.110	0.088	0.074	0.068	0.064	0.060	0.056	0.050
	R-13	2x4	3	0.102	0.082	0.069	0.064	0.060	0.056	0.053	0.047
	R-15 [1]	2x4	4	0.095	0.077	0.065	0.060	0.056	0.053	0.050	0.045
	R-19	2x6	5	0.074	0.063	0.055	0.051	0.049	0.046	0.044	0.040
	R-21[1]	2x6	6	0.069	0.059	0.051	0.048	0.046	0.043	0.041	0.038
	R-22	2x6	7	0.072	0.062	0.054	0.051	0.048	0.045	0.043	0.037
	R-23	2x6	8	0.067	0.057	0.049	0.047	0.044	0.042	0.040	0.037
	R-25	2x6	9	0.065	0.055	0.048	0.045	0.043	0.040	0.039	0.035
	R-19	2x8	10	0.065	0.057	0.051	0.048	0.045	0.043	0.041	0.038
	R-22	2x8	11	0.061	0.053	0.047	0.045	0.043	0.041	0.039	0.036
	R-25	2x8	12	0.057	0.050	0.044	0.042	0.040	0.038	0.037	0.034
	R-30[1]	2x8	13	0.056	0.049	0.044	0.041	0.040	0.038	0.036	0.033
24 in. OC	None	Any	14	0.362	0.211	0.148	0.128	0.114	0.102	0.092	0.078
	R-11	2x4	15	0.106	0.086	0.072	0.067	0.062	0.059	0.055	0.050
	R-13	2x4	16	0.098	0.079	0.067	0.062	0.058	0.055	0.052	0.047
	R-15	2x4	17	0.091	0.074	0.063	0.059	0.055	0.052	0.049	0.044
	R-19	2x6	18	0.071	0.061	0.053	0.050	0.048	0.045	0.043	0.040
	R-21[1]	2x6	19	0.066	0.057	0.050	0.047	0.045	0.042	0.040	0.037
	R-22	2x6	20	0.069	0.060	0.052	0.049	0.047	0.044	0.042	0.036
	R-23	2x6	21	0.064	0.054	0.048	0.045	0.043	0.041	0.039	0.036
	R-25	2x6	22	0.061	0.052	0.046	0.043	0.041	0.039	0.037	0.034
	R-19	2x8	23	0.063	0.055	0.049	0.047	0.045	0.043	0.041	0.037
	R-22	2x8	24	0.058	0.051	0.046	0.044	0.042	0.040	0.038	0.035
	R-25	2x8	25	0.055	0.048	0.043	0.041	0.039	0.037	0.036	0.033
	R-30[1]	2x8	26	0.054	0.047	0.042	0.040	0.038	0.037	0.035	0.033

Notes

1. Higher density fiberglass batt is required in these cases.
2. Continuous insulation may be installed on either the inside or the exterior of the wall, or both.

This table contains U-factors for wood framed walls, which are typical of low-rise residential buildings and Type V nonresidential buildings. If continuous insulation is not used, then choices are made from Column A. In this case, the insulation is installed in the cavity between the framing members. When continuous insulation is used, this is typically installed on the exterior side of the wall, but can also be used on the inside. The continuous insulation is typically a rigid polystyrene or polyisocyanurate foam insulation.

When this table is used manually, the R-value of continuous insulation shall be equal to or greater than the R-value published in the continuous insulation columns. No interpolation is permitted when data from the table is used manually. ~~CEC~~ Commission approved compliance software, however, may determine the U-factor for any amount of continuous insulation or for unusual construction assemblies using Equation 4-1 and Equation 4-2.

(see addendum at the end of this Section on page 4-75 for table 4.3.1(a) entitled "***Table 4.3.1(a) – U-factors***

of Wood Framed Walls with 5/8 gypsum[1] (Only to be used when 5/8 inch gypsum is installed)"

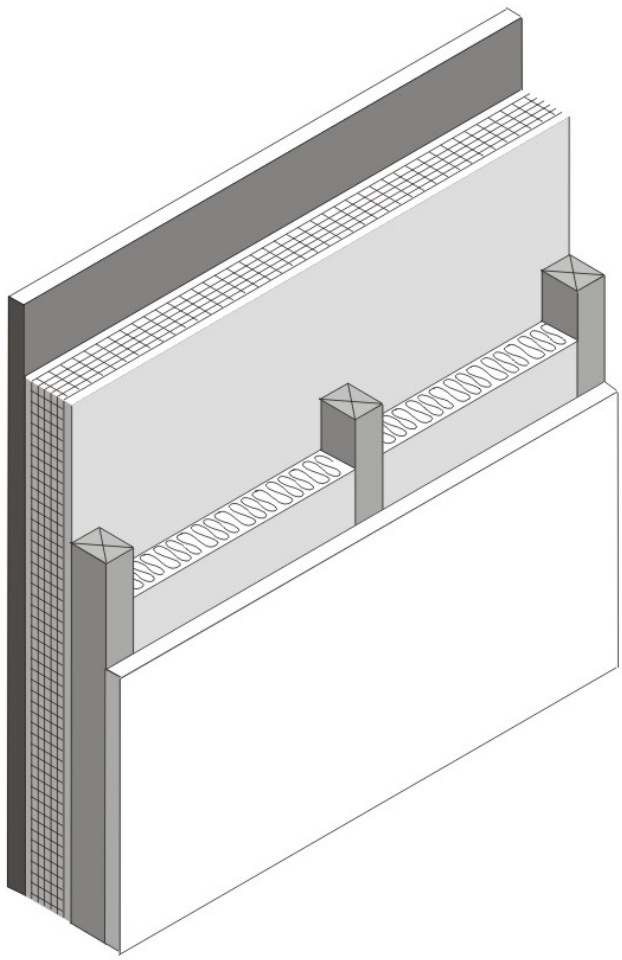

Figure 4.3.1 – Wood Framed Wall

Assumptions: Values in this table were calculated using the parallel heat flow calculation method, documented in the 2009 ASHRAE Handbook of Fundamentals. The construction assembly assumes an exterior air film of R-0.17, a 7/8 inch layer of stucco of R-0.18 (SC01), building paper of R-0.06 (BP01), continuous insulation (if any), the cavity insulation / framing layer, ½ inch gypsum board of R-0.45 (GP01), and an interior air film 0.68. The framing factor is assumed to be 25 percent for 16 inch stud spacing and 22 percent for 24 inch spacing. Actual cavity depth is 3.5 inch for 2x4, 5.5 inch for 2x6, 7.25 inch for 2x8, 9.25 inch for 2x10, and 11.25 inch for 2x12. High density R-30 insulation is assumed to be 8.5 inch thick batt and R-38 is assumed to be 10.5 inch thick. The thickness of the stucco is assumed to be reduced to 3/8 inch when continuous insulation is applied.

Table 4.3.2 – U-factors of Structurally Insulated Wall Panels (SIPS)

Wood Framing Connection Type (spline)	Insulation Core R-value[1]	Typical Panel Thickness		Rated R-value of Continuous Insulation [5]					
				None	R-2	R-4	R-5	R-6	R-8
				A	B	C	D	E	F
OSB	R-14	4.5 in	1	0.061	0.055	0.049	0.047	0.045	0.041
Single 2x	R-14	4.5 in	2	0.071	0.061	0.054	0.051	0.048	0.044
Double 2x	R-14	4.5 in	3	0.077	0.065	0.057	0.054	0.050	0.046
I-joist	R-14	4.5 in	4	0.070	0.060	0.053	0.051	0.048	0.044
OSB	R-18[2]	4.5 in	5	0.053	0.045	0.041	0.039	0.037	0.034
Single 2x	R-18[2]	4.5 in	6	0.061	0.052	0.047	0.045	0.042	0.039
Double 2x	R-18[2]	4.5 in	7	0.066	0.056	0.050	0.048	0.045	0.041
I-joist	R-18[2]	4.5 in	8	0.059	0.051	0.046	0.044	0.042	0.038
OSB	R-22	6.5 in	9	0.041	0.038	0.036	0.035	0.033	0.031
Single 2x	R-22	6.5 in	10	0.050	0.044	0.040	0.039	0.037	0.034
Double 2x	R-22	6.5 in	11	0.054	0.048	0.043	0.041	0.039	0.036
I-joist	R-22	6.5 in	12	0.048	0.043	0.039	0.038	0.036	0.033
OSB	R-28	8.25 in	13	0.032	0.030	0.029	0.028	0.027	0.026
Single 2x	R-28	8.25 in	14	0.039	0.036	0.033	0.032	0.031	0.029
Double 2x	R-28	8.25 in	15	0.043	0.039	0.035	0.034	0.033	0.030
I-joist	R-28	8.25 in	16	0.037	0.034	0.032	0.031	0.030	0.028
OSB	R-33[3]	6.5 in	17	0.032	0.029	0.027	0.026	0.025	0.023
Single 2x	R-33[3]	6.5 in	18	0.038	0.034	0.031	0.030	0.029	0.027
Double 2x	R-33[3]	6.5 in	19	0.043	0.038	0.034	0.033	0.031	0.029
I-joist	R-33[3]	6.5 in	20	0.036	0.033	0.030	0.029	0.028	0.026
OSB	R-36	10.25 in	21	0.026	0.024	0.023	0.023	0.022	0.021
Single 2x	R-36	10.25 in	22	0.032	0.030	0.028	0.027	0.026	0.024
Double 2x	R-36	10.25 in	23	0.035	0.032	0.030	0.029	0.028	0.026
I-joist	R-36	10.25 in	24	0.030	0.028	0.026	0.026	0.025	0.023
OSB	R-44	12.25 in	25	0.022	0.021	0.020	0.020	0.019	0.018
Single 2x	R-44	12.25 in	26	0.027	0.025	0.024	0.023	0.022	0.021
Double 2x	R-44	12.25 in	27	0.028	0.027	0.025	0.025	0.024	0.023
I-joist	R-44	12.25 in	28	0.025	0.024	0.022	0.022	0.021	0.020
OSB	R-55[4]	10.25 in	29	0.020	0.019	0.017	0.016	0.016	0.016
Single 2x	R-55[4]	10.25 in	30	0.024	0.022	0.021	0.021	0.020	0.019
Double 2x	R-55[4]	10.25 in	31	0.028	0.025	0.023	0.023	0.022	0.021
I-joist	R-55[4]	10.25 in	32	0.022	0.021	0.019	0.019	0.018	0.018

Notes:

1. The insulation R-value must be at least R-14 in order to use this table. This table assumes moulded expanded polystyrene (EPS) unless
   noted otherwise. Although other insulation types are used by some SIP manufacturers, such as polyurethane and extruded expanded
   insulation (XPS), EPS is the most common insulation used in SIP construction.
2. R-18.1 is achievable using extruded expanded polystyrene (XPS) insulation in 4.5" thick panels.
3. R-33.2 is achievable using polyurethane insulation in 6.5" panels.
4. R-55.3 is achievable using polyurethane insulation in 10.25" panels.
5. Continuous insulation shall be at least R-2 and may be installed on either the inside or the exterior of the wall.

Structural insulated panels (SIPs) consist of a rigid insulation core, securely bonded between two structural facings, to form a structural sandwich panel. SIPs are considered a non-framed assembly usually with little or no structural framing that penetrates the insulation layer, resulting in less thermal bridging across the insulation when compared to a conventional framed assembly.

This table gives U-factors for structurally insulated panels used in wall construction. This is a construction system that consists of rigid foam insulation sandwiched between two layers of plywood or oriented strand board (OSB). Data is provided for four variations of connecting two panels together.

If continuous insulation is not used, then choices are made from Column A. When continuous insulation is also used, this is typically installed on the exterior side of the wall, but can also be used on the inside. The continuous insulation is typically a rigid polystyrene or polyisocyanurate foam insulation. Adding continuous insulation to a SIPS panel is highly unusual since the panel itself is mostly continuous insulation.

When this table is used manually, the R-value of continuous insulation shall be equal to or greater than the R-value published in the continuous insulation columns. No interpolation is permitted when data from the table is used manually. ~~CEC~~ Commission approved software, however, may determine the U-factor for any amount of continuous insulation or for unusual construction assemblies using Equation 4-1 and Equation 4-2.

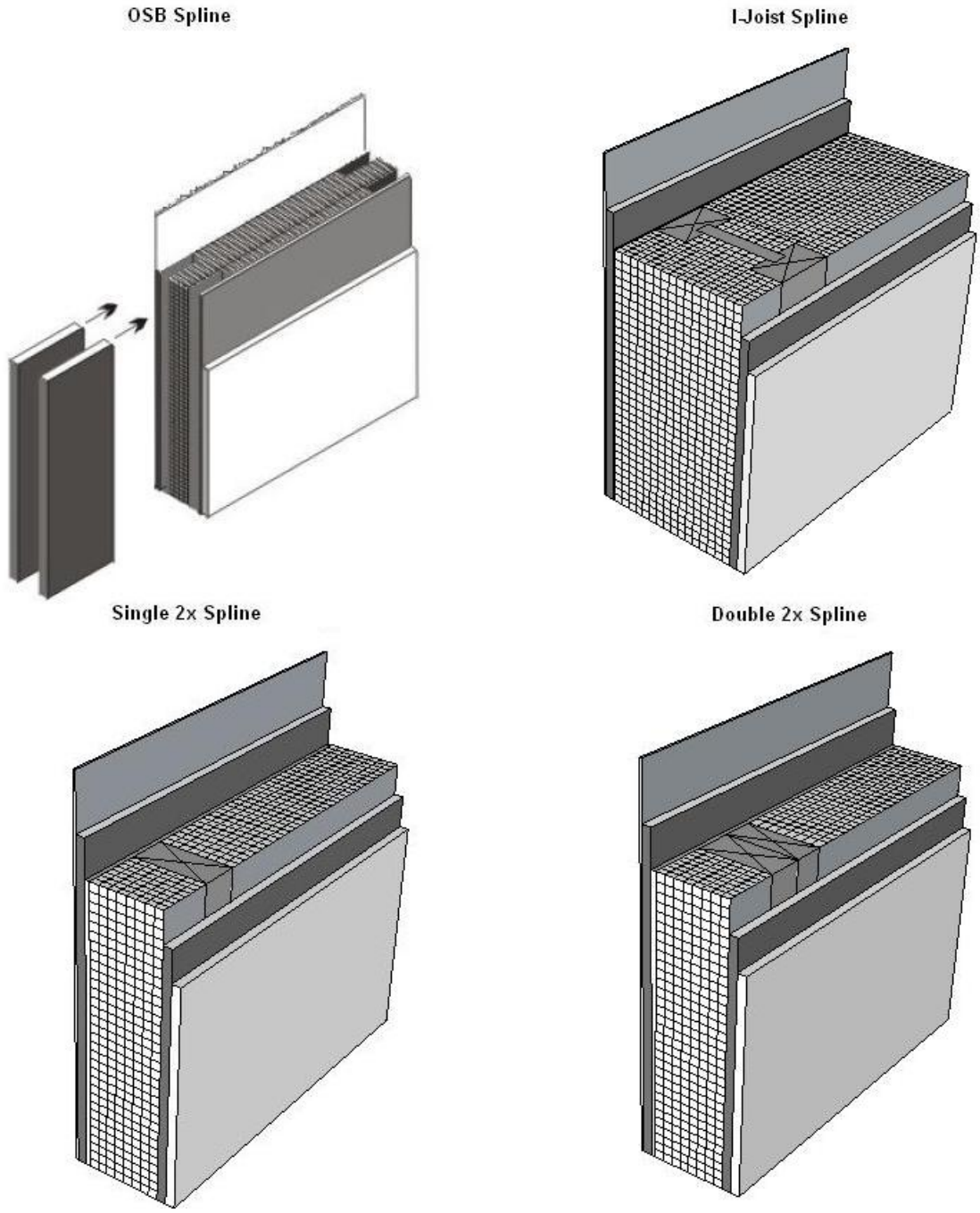

Figure 4.3.2 – Structurally Insulated Wall Panels (SIPS)

This figure shows just one way that panels are connected. Other options exist.

Assumptions: These data are calculated using the parallel path method documented in the 2009 ASHRAE Handbook of Fundamentals.

These calculations assume an exterior air film of R-0.17, a 7/8 inch layer of stucco of R-0.18, building paper of R-0.06 (BP01), 7/16 inch of OSB of R-0.44, insulation at carrying R-values (as specified), 7/16 inch of OSB of R-0.44, ½ inch gypsum board of R-0.45 (GP01), and in interior air film of R-0.68. A framing factor of 13 percent is assumed for wood spacers and 7 percent for the OSB spline system. Framing includes the sill plate, the header and framing around windows and doors.

Table 4.3.3 – U-factors of Metal Framed Walls for Nonresidential Construction

				Rated R-value of Continuous Insulation [2]									
	Cavity Insulation	Nominal		R-0	R-2	R-4	R-5	R-6	R-7	R-8	R-10	R-12	R-14
Spacing	R-Value:	aming Size		A	B	C	D	E	F	G	H	I	J
16 in. OC	None	Any	**1**	0.458	0.239	0.162	0.139	0.122	0.109	0.098	0.082	0.071	0.062
	R-5	2x4	**2**	0.351	0.203	0.144	0.127	0.112	0.101	0.092	0.078	0.067	0.059
	R-11	2x4	**3**	0.224	0.155	0.118	0.106	0.096	0.087	0.080	0.069	0.061	0.054
	R-13	2x4	**4**	0.217	0.151	0.116	0.104	0.094	0.086	0.079	0.068	0.060	0.054
	R-15	2x4	**5**	0.211	0.148	0.114	0.103	0.093	0.085	0.078	0.068	0.060	0.053
	R-19	2x6	**6**	0.183	0.134	0.106	0.096	0.087	0.080	0.074	0.065	0.057	0.051
	R-21[1]	2x6	**7**	0.178	0.131	0.104	0.094	0.086	0.079	0.073	0.064	0.057	0.051
	R-19	2x8	**8**	0.164	0.123	0.099	0.090	0.083	0.076	0.071	0.062	0.055	0.050
	R-22	2x8	**9**	0.160	0.121	0.098	0.089	0.082	0.075	0.070	0.062	0.055	0.049
	R-25	2x8	**10**	0.158	0.120	0.097	0.088	0.081	0.075	0.070	0.061	0.055	0.049
	R-30[1]	2x8	**11**	0.157	0.119	0.096	0.088	0.081	0.075	0.070	0.061	0.054	0.049
24 in. OC	None	Any	**20**	0.455	0.238	0.161	0.139	0.122	0.109	0.098	0.082	0.070	0.062
	R-5	2x4	**21**	0.333	0.200	0.143	0.125	0.111	0.100	0.091	0.077	0.067	0.059
	R-11	2x4	**22**	0.210	0.148	0.114	0.102	0.093	0.085	0.078	0.068	0.060	0.053
	R-13	2x4	**23**	0.203	0.144	0.112	0.101	0.092	0.084	0.077	0.067	0.059	0.053
	R-15	2x4	**24**	0.197	0.141	0.110	0.099	0.090	0.083	0.076	0.066	0.059	0.052
	R-19	2x6	**25**	0.164	0.123	0.099	0.090	0.083	0.076	0.071	0.062	0.055	0.050
	R-21[1]	2x6	**26**	0.161	0.122	0.098	0.089	0.082	0.076	0.070	0.062	0.055	0.049
	R-19	2x8	**27**	0.153	0.117	0.095	0.087	0.080	0.074	0.069	0.060	0.054	0.049
	R-22	2x8	**28**	0.149	0.115	0.093	0.085	0.079	0.073	0.068	0.060	0.053	0.048
	R-25	2x8	**29**	0.147	0.114	0.093	0.085	0.078	0.072	0.068	0.060	0.053	0.048
	R-30[1]	2x8	**30**	0.146	0.113	0.092	0.084	0.078	0.072	0.067	0.059	0.053	0.048

Notes

1. Higher density fiberglass batt is required in these cases.
2. Continuous insulation may be installed on either the inside or the exterior of the wall, or both.

This table contains U-factors for steel or metal-framed walls, which are typical of nonresidential buildings. The table may be used for any construction assembly where the insulation is installed in the cavity of a metal-framed wall, or where continuous insulation is installed on the exterior or interior of the metal framing, or a combination of these two methods of insulating a metal-framed wall.

If continuous insulation is not used, then choices are made from Column A. In this case, the insulation is installed only in the cavity between the framing members. When continuous insulation is used, it is typically installed on the exterior side of the wall, but can also be used on the inside. The continuous insulation is typically a rigid polystyrene or polyisocyanurate foam insulation.

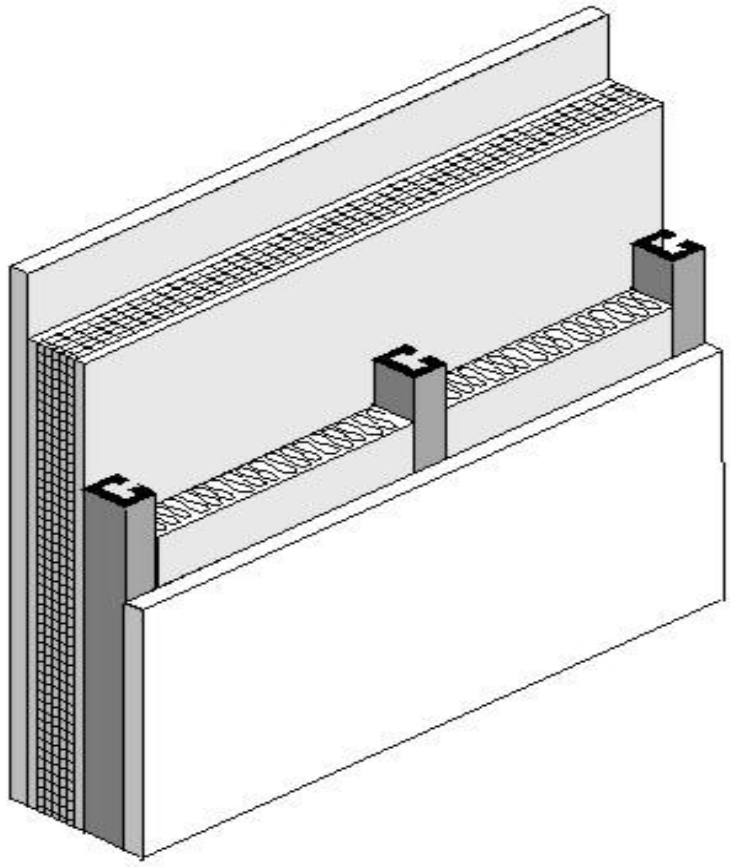

Figure 4.3.3 – Metal Framed Wall

When this table is used manually, the R-value of continuous insulation shall be equal to or greater than the R-value published in the continuous insulation columns. No interpolation is permitted when data from the table is used manually. ~~CEC~~ Commission approved compliance software programs, however, may determine the U-factor for any amount of continuous insulation or for unusual construction assemblies using Equation 4-1 and Equation 4-2.

Assumptions: Values in this table were calculated using the zone calculation method. The construction assembly assumes an exterior air film of R-0.17, a 7/8 inch layer of stucco of R-0.18, building paper of R-0.06 (BP01), continuous insulation (if any), the insulation / framing layer, 1/2 inch gypsum of R-0.45 gypsum board (GP01), and an interior air film 0.68. The steel framing is assumed to be 0.0747 inch thick with a 15 percent knock out. The framing factor is assumed to be 25 percent for 16 inch stud spacing and 22 percent for 24 inch spacing. The EZFrame internal default framing percentages are 15 percent for 16 inch stud spacing and 12 percent for 24 inch spacing. To account for the increased wall framing percentage the frame spacing input to the EZ Frame program is reduced to 13.218 inches for 16 inch stud spacing and 15.231 inches for 24 inch stud spacing. Actual cavity depth is 3.5 inch for 2x4, 5.5 inch for 2x6, 7.25 inch for 2x8, 9.25 inch for 2x10, and 11.25 inch for 2x12. High density R-30 insulation is assumed to be 8.5 inch thick batt and R-38 is assumed to be 10.5 inch thick. The thickness of the stucco is assumed to be reduced to 3/8 inch when continuous insulation is applied.

Table 4.3.4 – U-factors of Metal Framed Walls for Residential Construction

				Rated R-value of Continuous Insulation [2]					
	Cavity Insulation R-Value:	Nominal Framing Size		R-0	R-2	R-4	R-5	R-6	R-7
Spacing				A	B	C	D	E	F
16 in. OC	None	Any	**1**	0.455	0.238	0.161	0.139	0.122	0.109
	R-05	2x4	**2**	0.252	0.165	0.124	0.110	0.099	0.90
	R-11	2x4	**3**	0.200	0.137	0.107	0.097	0.088	0.081
	R-13	2x4	**4**	0.192	0.132	0.105	0.095	0.087	0.080
	R-15	2x4	**5**	0.186	0.129	0.102	0.093	0.085	0.078
	R-19	2x6	**6**	0.154	0.112	0.092	0.084	0.077	0.072
	R-21[1]	2x6	**7**	0.151	0.110	0.090	0.083	0.076	0.071
	R-19	2x8	**8**	0.134	0.102	0.085	0.078	0.072	0.067
	R-22	2x8	**9**	0.129	0.099	0.082	0.076	0.071	0.066
	R-25	2x8	**10**	0.125	0.096	0.081	0.075	0.069	0.065
	R-30[1]	2x8	**11**	0.120	0.093	0.078	0.073	0.068	0.063
	R-30	2x10	**12**	0.109	0.086	0.073	0.068	0.064	0.060
	R-38[1]	2x10	**13**	0.104	0.082	0.071	0.066	0.062	0.058
	R-38	2 x 12	**14**	0.095	0.077	0.067	0.062	0.059	0.055
24 in. OC	None	Any	**15**	0.449	0.236	0.161	0.138	0.121	0.108
	R-05	2x4	**16**	0.243	0.161	0.122	0.108	0.098	0.089
	R-11	2x4	**17**	0.189	0.131	0.104	0.094	0.086	0.079
	R-13	2x4	**18**	0.181	0.127	0.101	0.092	0.084	0.078
	R-15	2x4	**19**	0.175	0.123	0.099	0.090	0.082	0.076
	R-19	2x6	**20**	0.144	0.107	0.088	0.081	0.075	0.070
	R-21[1]	2x6	**21**	0.141	0.105	0.086	0.080	0.074	0.069
	R-19	2x8	**22**	0.126	0.097	0.081	0.075	0.070	0.065
	R-22	2x8	**23**	0.121	0.094	0.079	0.073	0.068	0.064
	R-25	2x8	**24**	0.117	0.091	0.077	0.071	0.067	0.063
	R-30[1]	2x8	**25**	0.112	0.088	0.075	0.069	0.065	0.061
	R-30	2x10	**26**	0.102	0.081	0.070	0.065	0.061	0.058
	R-38[1]	2x10	**27**	0.096	0.077	0.067	0063	0.059	0.056
	R-38	2 x 12	**28**	0.088	0.072	0.063	0.059	0.056	0.053

Notes

1. Higher density fiberglass batt is required in these cases.
2. Continuous insulation may be installed on either the inside or the exterior of the wall, or both.

This table contains U-factors for steel or metal framed walls in low-rise residential buildings where the thickness of the framing members is 18 gauge or thinner. Table 4.3.3 in Reference Joint Appendix JA4 must be used for steel or metal-.framed walls in nonresidential buildings (including high-rise residential buildings and hotels and motels) and in low rise residential buildings if the thickness of the framing members are thinner than 18 gauge.

If continuous insulation is not used, then choices are made from Column A. In this case, the insulation is installed only in the cavity between the framing members. When continuous insulation is-used, it is typically installed on the exterior side of the wall, but can also be used on the inside. The continuous insulation is typically a rigid polystyrene or polyisocyanurate foam insulation.

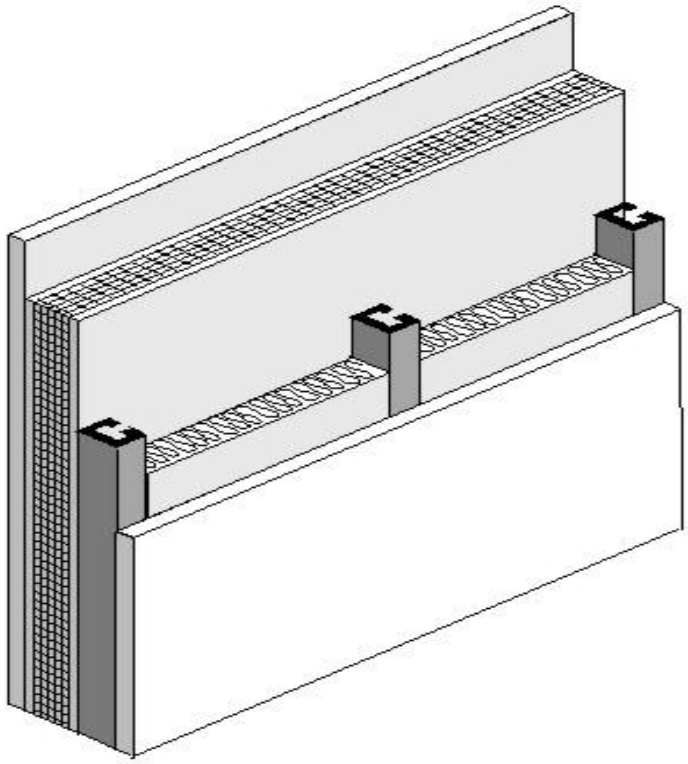

Figure 4.3.4 – Metal Framed Wall

When this table is used manually, the R-value of continuous insulation shall be equal to or greater than the R-value published in the continuous insulation columns. No interpolation is permitted when data from the table is used manually. ~~CEC~~ Commission approved compliance software programs, however, may determine the U-factor for any amount of continuous insulation or for unusual construction assemblies using Equation 4-1 and Equation 4-2.

Assumptions: Values in this table were calculated using the zone calculation method. The construction assembly assumes an exterior air film of R-0.17, a 7/8 inch layer of siding or stucco averaging R-0.18, building paper of R-0.06 (BP01), continuous insulation (if any), the insulation / framing insulation layer, 1/2 inch gypsum of R-0.45 gypsum board (GP01), and an interior air film 0.68. The framing factor is assumed to be 25 percent for 16 inch stud spacing and 22 percent for 24 inch spacing. To account for the increased wall framing percentage, the frame spacing input to the EZ Frame program is reduced to 13.218 inches for 16 inch stud spacing and 15.231 inches for 24 inch stud spacing. The stud web thickness is assumed to be 0.038 inches, which is a 50/50 mix of 18 gauge and 20 gauge C-channel studs. This value was confirmed to be representative of low-rise residential construction by polling several California-based light-gauge steel structural engineers and light-gauge steel framers. Actual cavity depth is 3.5 inch for 2x4, 5.5 inch for 2x6, 8 inch for 2x8, 10 inch for 2x10, and 12 inches for 2x12. High density R-30 insulation is assumed to be 8.5 inch thick batt and R-38 is assumed to be 10.5 inches thick. The thickness of the stucco is assumed to be reduced to 3/8 inch when continuous insulation is applied.

Table 4.3.5 – Properties of Hollow Unit Masonry Walls

						Partly Grouted with Ungrouted Cells					
			Solid Grout			Empty			Insulated		
Thickness	**Type**		A			B			C		
		1	U-factor	C-factor	HC	U-factor	C-factor	HC	U-factor	C-factor	HC
12"	LW CMU	**2**	0.51	0.90	23	0.43	0.68	14.8	0.30	0.40	14.8
	MW CMU	**3**	0.54	1.00	23.9	0.46	0.76	15.6	0.33	0.46	15.6
	NW CMU	**4**	0.57	1.11	24.8	0.49	0.84	16.5	0.36	0.52	16.5
10"	LW CMU	**5**	0.55	1.03	18.9	0.46	0.76	12.6	0.34	0.48	12.6
	MW CMU	**6**	0.59	1.18	19.7	0.49	0.84	13.4	0.37	0.54	13.4
	NW CMU	**7**	0.62	1.31	20.5	0.52	0.93	14.2	0.41	0.63	14.2
8"	LW CMU	**8**	0.62	1.31	15.1	0.50	0.87	9.9	0.37	0.54	9.9
	MW CMU	**9**	0.65	1.45	15.7	0.53	0.96	10.5	0.41	0.63	10.5
	NW CMU	**10**	0.69	1.67	16.3	0.56	1.07	11.1	0.44	0.70	11.1
	Clay Unit	**11**	0.57	1.11	15.1	0.47	0.78	11.4	0.39	0.58	11.4
6"	LW CMU	**12**	0.68	1.61	10.9	0.54	1.00	7.9	0.44	0.70	7.9
	MW CMU	**13**	0.72	1.86	11.4	0.58	1.14	8.4	0.48	0.81	8.4
	NW CMU	**14**	0.76	2.15	11.9	0.61	1.27	8.9	0.52	0.93	8.9
	Clay Unit	**15**	0.65	1.45	11.1	0.52	0.93	8.6	0.45	0.73	8.6

The walls addressed in this table are rarely used in residential construction, but are common in some types of nonresidential construction. The tables include four types of hollow masonry units: lightweight concrete masonry units (CMU), medium weight CMU, normal weight CMU, and hollow clay masonry units. ASTM C-90 defines these masonry products in more detail.

Masonry used in California must be reinforced to withstand wind loads and earthquakes. This is achieved by installing reinforcing steel and grouting the cells in both a vertical and horizontal direction. Since grouting the cells affects thermal performance, data is provided for three cases: where every cell is grouted, where the cells are partially grouted and the remaining cells are left empty, and where the cells are partially grouted and the remaining cells are filled with perlite or some other insulating material.

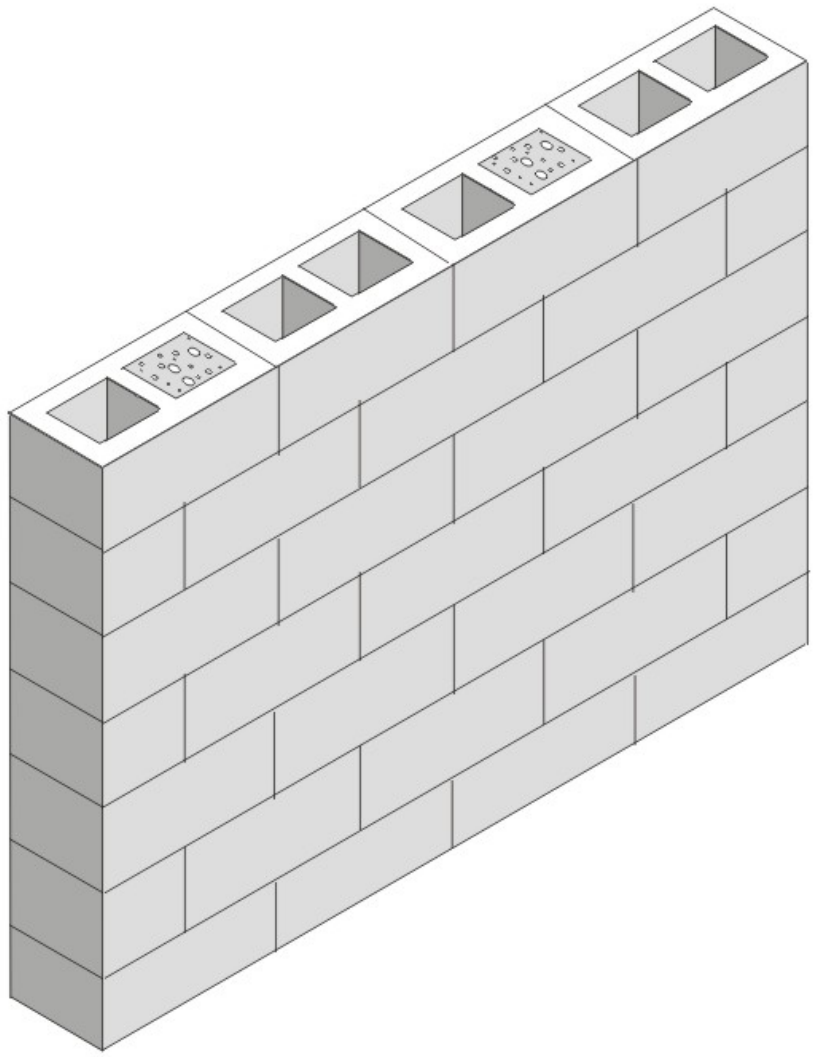

Figure 4.3.5 – Masonry Wall

For each of these conditions the U-factor, C-factor and heat capacity (HC) is published. There are other properties of mass materials that may be needed in compliance calculations, but these values can be determined from the published data using the procedures in Modeling Constructions in the Nonresidential compliance software and in Section 4.6 of this document.

Assumptions: Data is taken from *Energy Calculations and Data*, CMACN, 1986, Berkeley Solar Group; Concrete Masonry Association of California and Nevada. The density of the CMU material (not counting the grouted or hollow cells) is 105 lb/ft³ for lightweight, 115 lb/ft³ for medium weight and 125 lb/ft³ for normal weight. The density of the clay unit material is 130 lb/ft³. For all four types of masonry units, data is provided for thicknesses of 6 in., 8 in., 10 in., and 12 in. For the partially grouted cases, vertical cells are assumed to be grouted at 32 inch on center. Reinforcing in the horizontal direction is at 48 in. on center. Wall thicknesses given in the table are nominal; actual thicknesses are 3/8 in. less. Insulating material inside unit masonry hollow is assumed to be perlite.

Table 4.3.6 – Properties of Solid Unit Masonry and Solid Concrete Walls

			Wall Thickness, inches									
			3	**4**	**5**	**6**	**7**	**8**	**9**	**10**	**11**	**12**
Type	**Property**		**A**	**B**	**C**	**D**	**E**	**F**	**G**	**H**	**I**	**J**
LW CMU	U-Factor		0.79	0.71	0.65	0.59	0.54	0.51	0.47	0.44	0.42	0.39
	C-Factor	**1**	2.38	1.79	1.43	1.18	1.01	0.88	0.79	0.71	0.65	0.59
	HC		5.3	7.00	8.80	10.50	12.30	14.00	15.80	17.50	19.30	21.00
MW CMU	U-Factor		0.84	0.77	0.70	0.65	0.61	0.57	0.53	0.50	0.48	0.45
	C-Factor	**2**	2.94	2.22	1.75	1.47	1.25	1.10	0.98	0.88	0.80	0.74
	HC		5.80	7.70	9.60	11.5	13.40	15.30	17.30	19.20	21.10	23.00
NW CMU	U-Factor		0.88	0.82	0.76	0.71	0.67	0.63	0.60	0.56	0.53	0.51
	C-Factor	**3**	3.57	2.70	2.17	1.79	1.54	1.35	1.20	1.03	0.98	0.90
	HC		6.30	8.30	10.40	12.50	14.6	16.70	18.80	20.80	22.90	25.00
Clay Brick	U-Factor		0.80	0.72	0.66	na	na	Na	na	Na	na	na
	C-Factor	**4**	2.50	1.86	1.50	na	na	Na	na	Na	na	na
	HC		6.30	8.40	10.43	na	na	Na	na	Na	na	na
Concrete	U-Factor		0.96	0.91	0.86	0.82	0.78	0.74	0.71	0.68	0.65	0.63
	C-Factor	**5**	5.22	4.02	3.20	2.71	2.31	1.99	1.79	1.61	1.45	1.36
	HC		7.20	9.60	12.00	14.40	16.80	19.20	21.60	24.00	26.40	28.80

This table provides thermal performance information for solid masonry units and solid concrete walls.

The walls addressed in this table are rarely used in residential construction, but are common in some types of nonresidential construction.

There are other properties of mass materials that may be needed in compliance calculations, but these values can be determined from the published data using the procedures in Modeling Constructions in the Nonresidential compliance software and in Section 4.6 of this document.

When insulation is added to the outside of masonry walls and/or when the inside is furred and insulated, the performance data in this table may be adjusted using Equation 4-4 and Equation 4-5 in coordination with Table 4.3.14.

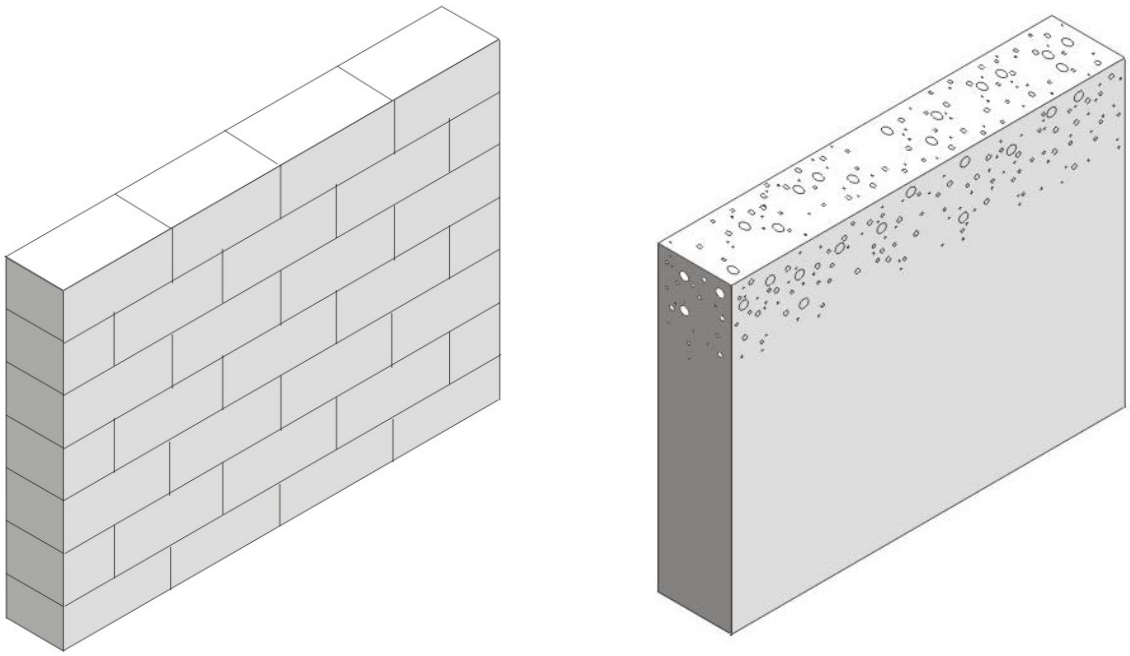

Figure 4.3.6 – Solid Unit Masonry (left) and Solid Concrete (right) Walls

Assumptions: Data is taken from ASHRAE/IESNA Standard 90.1-2004. The density of the CMU material is 105 lb/ft³ for lightweight, 115 lb/ft³ for medium weight and 125 lb/ft³ for normal weight. The density of the clay unit material is 130 lb/ft³ and the density of the concrete is 144 lb/ft³. For all five types of masonry walls, the U-factor, C-factor and heat capacity (HC) is provided for thicknesses of 3 inch, 4 inch, and 5 inch ASTM C-90 provides more information on the classification of masonry walls.

Table 4.3.7 – Properties of Concrete Sandwich Panels

Percent Concrete Web	Steel Penetrates Insulation	Performance Factor		Insulation Thickness (R-value)				
				1.5 (7.0)	**2.0 (9.3)**	**3.0 (14.0)**	**4.0 (18.6)**	**6.0 (27.9)**
				A	**B**	**C**	**D**	**E**
0%	No	U-factor	**1**	0.122	0.095	0.066	0.051	0.034
		C-factor		0.136	0.104	0.070	0.053	0.035
		HC		16.13	16.13	16.13	16.13	16.13
	Yes	U-factor	**2**	0.164	0.128	0.091	0.070	0.048
		C-factor		0.190	0.144	0.099	0.074	0.050
		HC		16.13	16.13	16.13	16.13	16.13
10%	No	U-factor	**3**	0.476	0.435	0.345	0.286	0.217
		C-factor		0.800	0.690	0.488	0.377	0.267
		HC		16.53	16.66	16.93	17.20	17.74
	Yes	U-factor	**4**	0.500	0.435	0.357	0.303	0.227
		C-factor		0.870	0.690	0.513	0.408	0.282
		HC		16.53	16.66	16.93	17.20	17.74
20%	No	U-factor	**5**	0.588	0.556	0.476	0.417	0.333
		C-factor		1.176	1.053	0.800	0.645	0.465
		HC		16.93	17.20	17.74	18.28	19.35
	Yes	U-factor	**6**	0.588	0.556	0.476	0.417	0.333
		C-factor		1.176	1.053	0.800	0.645	0.465
		HC		16.93	17.20	17.74	18.28	19.35

This table provides U-factors, C-factors, and heat capacity (HC) data for concrete sandwich panels. Concrete sandwich panels, as the name suggests, consist of two layers of concrete that sandwich a layer of insulation. The wall system can be constructed in the field or in a factory. One method of field construction is where the wall panels are formed in a flat position using the concrete floor slab of the building as the bottom surface. After the panel has set, it is hoisted with a crane into its final vertical position.

Both the percent of concrete web and the percent steel are factors in determining the thermal performance of walls. The insulation layer in this type of concrete sandwich panel generally does not extend over the entire surface of the wall. To provide structural integrity, a certain portion of the wall is solid concrete, which ties together the two concrete layers. This portion is known as the concrete web. The thermal performance of concrete sandwich panels depends on the percent of the wall that is concrete web. Data is provided for concrete webs representing 0 percent, 10 percent and 20 percent of the opaque wall surface. In some cases, the concrete layers are tied together by structural steel that penetrates the insulation layer. Data is provided for the case where this steel is present and for cases where it is not.

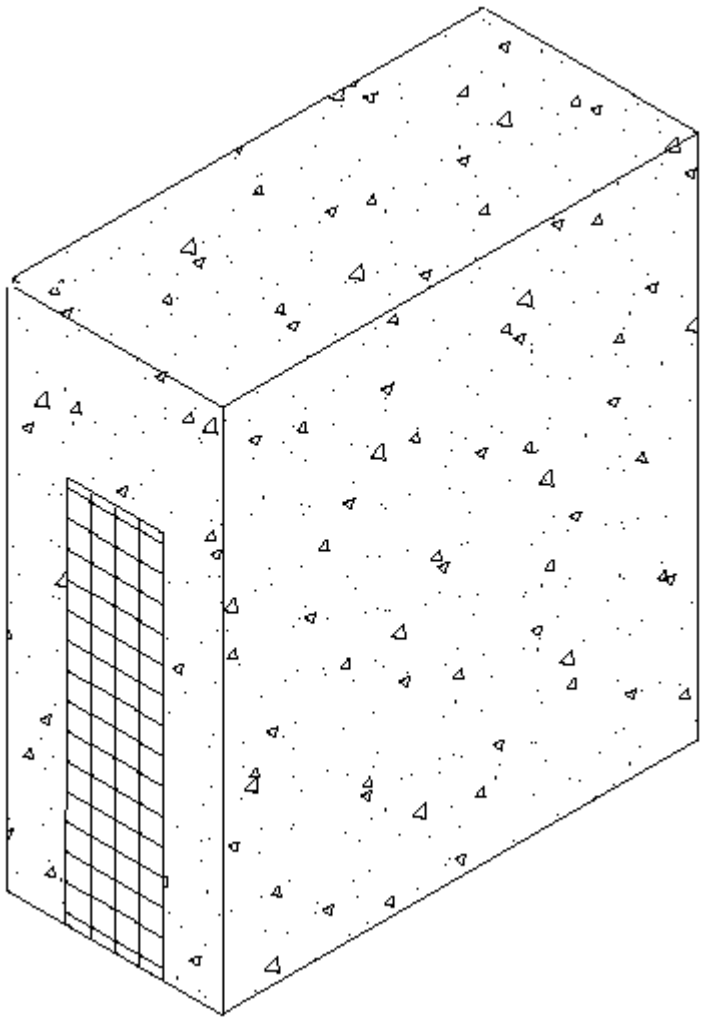

Figure 4.3.7 – Concrete Sandwich Panel

Other properties of mass materials such as density, conductivity, specific heat and wall weight may be needed in compliance calculations and these properties may be determined from the published data in Table 4.3.7 using the procedures in Modeling Constructions in the Nonresidential compliance software and in Section 4.6 of this document.

Values from this table may be combined with values from Table 4.3.14 when a furring layer is added to the inside of the wall and/or continuous insulation is added to the outside of the wall. Adjustments for additional layers shall follow the procedure of Equation 4-4 and Equation 4-5.

Assumptions: U-factors include an inside air film of 0.68 and an exterior air film of 0.17. Conductivity of the concrete is assumed to be 0.215 Btu/h-ºF-f, density is 150 lb/ft³, the thickness of each side of the sandwich panel is 0.5 ft. The data was calculated by Construction Technologies Laboratories, Inc. and published in the Thermal Mass Handbook, Concrete and Masonry Design Provisions Using ASHRAE/IESNA 90.1-1989, National Codes and Standards Council of the Concrete and Masonry Industries, 1994.

Table 4.3.8 – U-factors for Spandrel Panels and Glass Curtain Walls

			Rated R-value of Insulation between Framing Members							
			None	**R-4**	**R-7**	**R-10**	**R-15**	**R-20**	**R-25**	**R-30**
Frame Type	**Spandrel Panel**		**A**	**B**	**C**	**D**	**E**	**F**	**G**	**H**
Aluminum without Thermal Break	Single glass pane, stone, or metal panel	**1**	0.360	0.242	0.222	0.212	0.203	0.198	0.195	0.193
	Double glass with no low-e coatings	**2**	0.297	0.233	0.218	0.209	0.202	0.197	0.194	0.192
	Triple or low-e glass	**3**	0.267	0.226	0.214	0.207	0.200	0.196	0.194	0.192
Aluminum with Thermal Break	Single glass pane, stone, or metal panel	**4**	0.350	0.211	0.186	0.173	0.162	0.155	0.151	0.149
	Double glass with no low-e coatings	**5**	0.278	0.200	0.180	0.170	0.160	0.154	0.151	0.148
	Triple or low-e glass	**6**	0.241	0.191	0.176	0.167	0.159	0.153	0.150	0.148
Structural Glazing	Single glass pane, stone, or metal panel	**7**	0.354	0.195	0.163	0.147	0.132	0.123	0.118	0.114
	Double glass with no low-e coatings	**8**	0.274	0.180	0.156	0.142	0.129	0.122	0.117	0.114
	Triple or low-e glass	**9**	0.231	0.169	0.150	0.138	0.127	0.121	0.116	0.113
No framing or Insulation is Continuous	Single glass pane, stone, or metal panel	**10**	0.360	0.148	0.102	0.078	0.056	0.044	0.036	0.031
	Double glass with no low-e coatings	**11**	0.297	0.136	0.097	0.075	0.054	0.043	0.035	0.030
	Triple or low-e glass	**12**	0.267	0.129	0.093	0.073	0.053	0.042	0.035	0.030

This table has U-factors for the spandrel section of glass and other curtain wall systems. Design factors that affect performance are the type of framing, the type of spandrel panel and the R-value of insulation.

Four framing conditions are considered in the table. The first is the common case where standard aluminum mullions are used. Standard mullions provide a thermal bridge through the insulation, reducing its effectiveness. The second case is for metal framing members that have a thermal break. A thermal break frame uses a urethane or other non-metallic element to separate the metal exposed to outside conditions from the metal that is exposed to interior conditions. The third case is for structural glazing or systems where there is no exposed mullion on the interior. The fourth case is for the condition where there is no framing or the insulation is continuous and uninterrupted by framing. The columns in the table can be used for any specified level of insulation between framing members installed in framed curtain walls or spandrel panels.

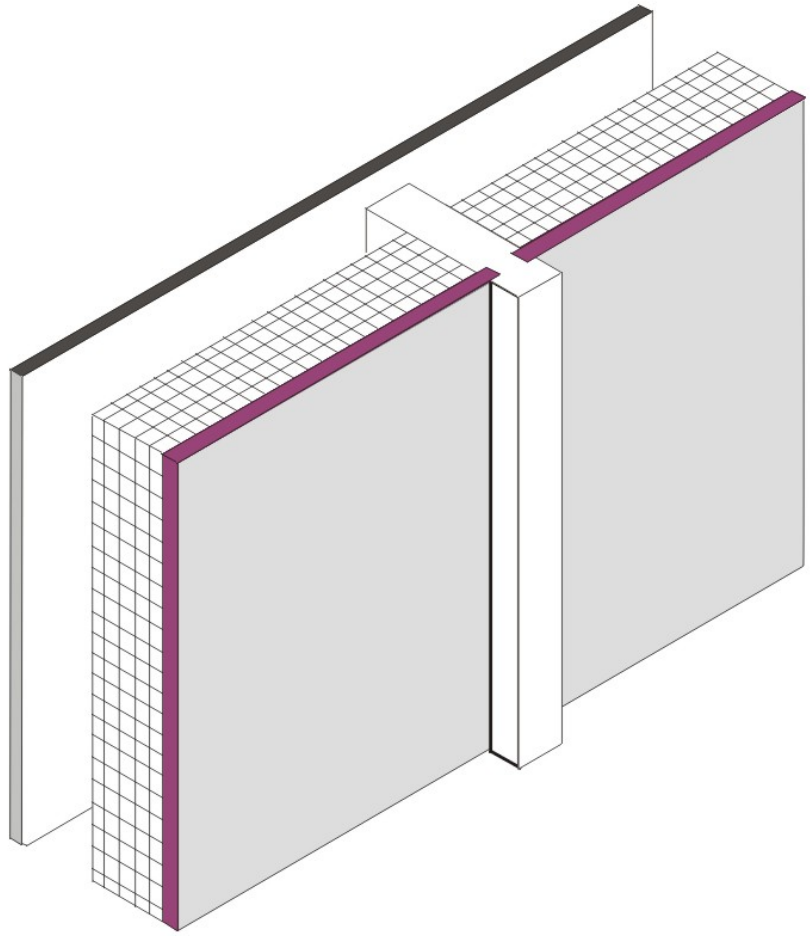

Figure 4.3.8 – Spandrel Panel

There are three spandrel panel cases considered in the table. The first is for a panel that provides little or no insulating value. This includes single pane glass, stone veneer, metal panels, or pre-case concrete less than 2 inches thick. The second case is for insulating glass. Sometimes insulating glass is used so that the spandrel panel looks similar to the vision glass. The third case is for triple glass or double glass that has a low-e coating.

Insulation levels are shown in the columns of the table. When the table is used manually, the R-value of insulation shall be equal to or greater than the R-value published in the columns. No interpolation is permitted when data from the table is selected manually. California Energy Commission approved compliance software programs, including those used for prescriptive compliance, may accurately account for any amount of continuous insulation or for unusual construction assemblies using Equation 4-1 and Equation 4-2. If the curtain wall has an insulated metal-framed wall on the inside, then values from this table may be combined with values from Table 4.3.4 or Table 4.3.14 using the procedures of Equation 4-2 or Equation 4-3.

Assumptions: The U-factors in Table 4.3.8 were derived from a regression analysis of the values for "Glass Only Center of Glass" and "Curtain Wall" in the 2009 ASHRAE Handbook of Fundamentals, Chapter 15, Table 4. The U-factors in Table 4.3.8 include an exterior air film with an R-value of 0.17 and an interior air film R-value of 0.68, which are accounted for in the values from the 2009

ASHRAE Handbook of Fundamentals. The construction assembly consists of the Frame Type and Spandrel Panel combinations listed in Table 4.3.8, an air gap with an R-value of 1.39 (3/4 inch gap, 50 ºF

mean temperature and 30 ºF temperature difference), and 5/8 inch gypsum board with an R-value of 0.56 that provides the interior finish. The gypsum board is assumed to span between the window sill and a channel at the floor.

The following equations were used when no rigid insulation is added to the assembly.

Aluminum Without Thermal Break

$$U_{Overall} = \frac{1}{\left[\left(R_{Gypsum} + R_{AirGap}\right) + \left(\frac{1}{0.2798 + 0.8929 \times U_{CenterofGlass}}\right)\right]}$$ Equation 4-6

Aluminum With Thermal Break

$$U_{Overall} = \frac{1}{\left[\left(R_{Gypsum} + R_{AirGap}\right) + \left(\frac{1}{0.1808 + 0.8874 \times U_{CenterofGlass}}\right)\right]}$$ Equation 4-7

Structural Glazing

$$U_{Overall} = \frac{1}{\left[\left(R_{Gypsum} + R_{AirGap}\right) + \left(\frac{1}{0.1151 + 0.9487 \times U_{CenterofGlass}}\right)\right]}$$ Equation 4-8

The following equations were used when rigid insulation is added to the assembly.

Aluminum Without Thermal Break

$$U_{Overall} = \frac{1}{\left[\left(R_{Gypsum} + R_{AirGap}\right) + \left(\frac{1}{\left(0.2798 + 0.8929 \times \left(\left(\frac{1}{R_{AddedInsulation}}\right) + U_{CenterofGlass}\right)\right)}\right)\right]}$$ Equation 4-9

Aluminum With Thermal Break

$$U_{Overall} = \frac{1}{\left[\left(R_{Gypsum} + R_{AirGap}\right) + \left(\frac{1}{\left(0.1808 + 0.8874 \times \left(\left(\frac{1}{R_{AddedInsulation}}\right) + U_{CenterofGlass}\right)\right)}\right)\right]}$$ Equation 4-10

Structural Glazing

$$U_{Overall} = \frac{1}{\left[\left(R_{Gypsum} + R_{AirGap}\right) + \left(\frac{1}{\left(0.1151 + 0.9487 \times \left(\left(\frac{1}{R_{AddedInsulation}}\right) + U_{CenterofGlass}\right)\right)}\right)\right]}$$ Equation 4-11

Table 4.3.9 – U-factors for Metal Building Walls

Insulation System	Rated R-Value of Insulation		Continuous Rigid Insulation							
			None	R-2	R-4	R-6	R-7	R-8	R-10	R-14
			A	B	C	D	E	F	G	H
Single Layer of Batt Insulation	None	1	1.18	0.351	0.206	0.146	0.127	0.113	0.092	0.067
	R-6	2	0.184	0.135	0.106	0.087	0.080	0.074	0.065	0.051
	R-10	3	0.134	0.106	0.087	0.074	0.069	0.065	0.057	0.047
	R-11	4	0.123	0.099	0.082	0.071	0.066	0.062	0.055	0.045
	R-13	5	0.113	0.092	0.078	0.067	0.063	0.059	0.053	0.044
Double Layer of Batt Insulation	R-6 + R-13	6	0.07	0.061	0.055	0.049	0.047	0.045	0.041	0.035
	R-10 + R-13	7	0.061	0.054	0.049	0.045	0.043	0.041	0.038	0.033
	R-13 + R-13	8	0.057	0.051	0.046	0.042	0.041	0.039	0.036	0.032
	R-19 + R-13	9	0.048	0.044	0.040	0.037	0.036	0.035	0.032	0.029

Double layer or batt insulation may not be able to have Continuous rigid insulation added.

The U-factors in this table are intended for use with metal building walls. This type of construction is typical for manufacturing and warehouse facilities, but is used for other building types as well. The typical method of insulating this type of building is to stretch vinyl backed fiberglass insulation over the metal girts before the metal siding is attached with metal screws. With this method, the insulation is compressed at each girt, reducing its effectiveness. The first part of the table contains values for this insulation technique. The second section of the table has data for systems that have two layers of insulation. In this section layers are listed from inside to outside.

For the majority of cases, values will be selected from column A of this table. Builders or designers may increase thermal performance by adding a rigid continuous insulation layer between the metal siding and the structural supports. When this table is used manually, the R-value of continuous insulation shall be equal to or greater than the R-value published in the continuous insulation columns. No interpolation is permitted when data from the table is used manually. Energy Commission approved compliance software, however, may determine the U-factor for any amount of continuous insulation using Equation 4-1.

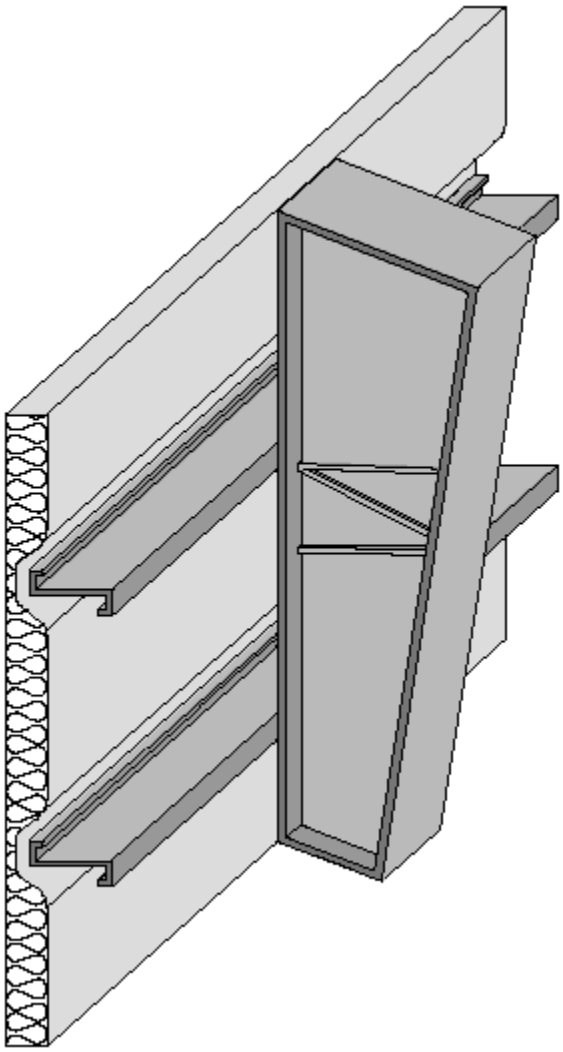

Figure 4.3.9 – Metal Building Wall

Assumptions: Data in Column A of this table is taken from the ASHRAE/IESNA Standard 90.1-2004, Appendix A. The data in columns beyond A are calculated using Equation 4-1.

Table 4.3.10 – U-factors for Insulated Metal Panel Walls

		U-factor (Btu/^{0}F-ft^2)
Panel Thickness		**A**
2”	**1**	0.078
2 ½”	**2**	0.063
3”	**3**	0.053
4”	**4**	0.041
5”	**5**	0.033
6”	**6**	0.027

This table contains thermal performance data (U-factors) for foamed-in-place, insulated metal panels consisting of liquid polyurethane or polyisocyanurate injected between metal skins in individual molds or on fully automated production lines. Metal building construction is the most common application for this product where the metal panel is fastened to the frame of the structure. This table can only be used for insulated panels that are factory built. This table does not apply to panels that utilize polystyrene, or to field applied products such as spray applied insulations.

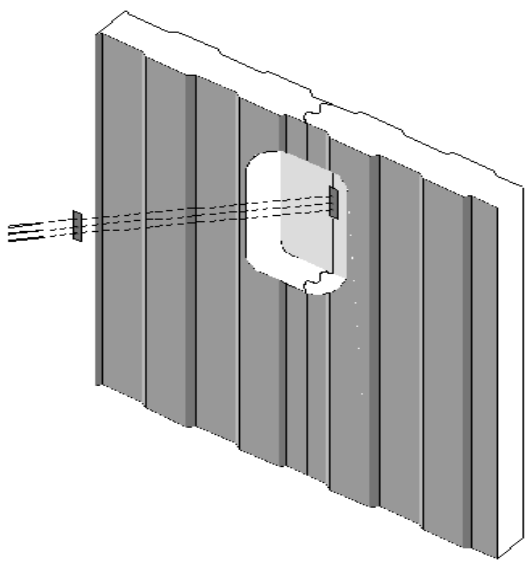

Figure 4.3.10 –Insulated Metal Panel Walls

Assumptions. These data are calculated using the parallel path method documented in the 2009 ASHRAE Handbook of Fundamentals. These calculations assume an exterior air film of R-0.17, light gauge metal exterior of 0.0747 inch thickness, continuous insulation R-5.9 per inch, light gauge metal interior of 0.0747 inch thickness, interior air film (heat flow horizontal) of R-0.68. The panels are assumed to be continuous with no framing penetration. The R-value of the metal is negligible.

Table 4.3.11 – Thermal Properties of Log Home Walls

		U-factor	Heat Capacity (HC)
Log Diameter		A	
6”	**1**	0.133	4.04
8”	**2**	0.102	6.06
10”	**3**	0.083	6.73
12”	**4**	0.070	8.08
14”	**5**	0.060	9.42
16”	**6**	0.053	10.77

This table has U-factors and heat capacity data for log homes Data is provided for logs in six thicknesses ranging from 6 in. to 16 in. If other thermal properties are needed such as density, weight, conductivity, etc., use the procedures in Modeling Constructions in the Nonresidential compliance software and contained in Section 4.6 of this document. Energy Commission approved Compliance Software Programs may adjust the data for interior furring using data from Table 4.3.14 and the procedure from Equation 4-2.

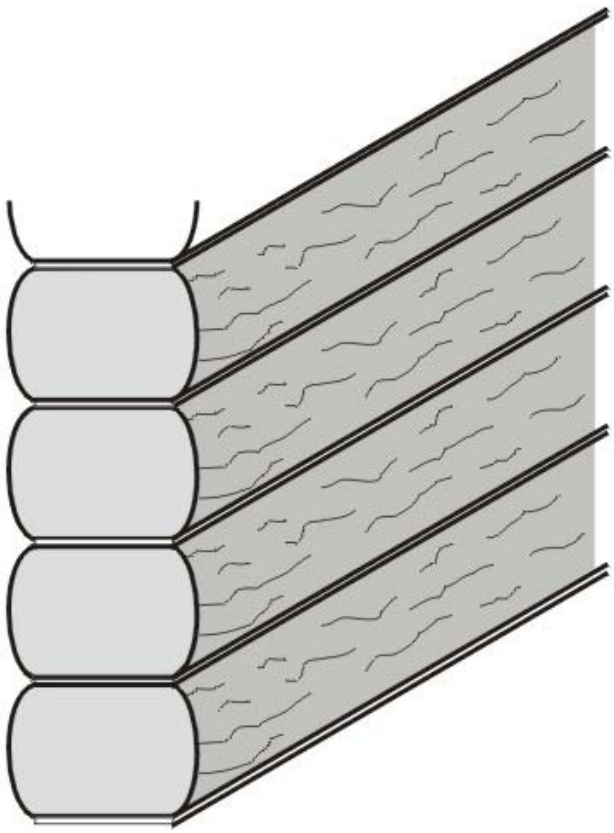

Figure 4.3.11 – Log Home Walls

Assumptions: Calculations are based on ASHRAE series method of calculation, 2009 ASHRAE Handbook of Fundamentals. Values assume a log R-value of R-1.25/inch, an average wall thickness of 90 percent of the log diameter, an interior air film of R-0.68 and an exterior air film of R-0.17. Values do not account for presence of windows or doors. Construction assumes no additional siding or insulation. Heat Capacity is based on a hardwood density of 26.6 lb/ft³ and a specific heat of 0.39 Btu/lb-ºF. An exterior air film of R-0.17 and an interior film of R-0.68 are assumed.

Table 4.3.12 – Thermal and Mass Properties of Straw Bale Walls

		A
R-value	1	30
U-factor		0.033
Heat Capacity Btu/ft^2*°F]		2.24

This table has data that may be used for straw bale construction. This is an alternative construction technique used in some rural areas. The technique is not commonly used for production homes.

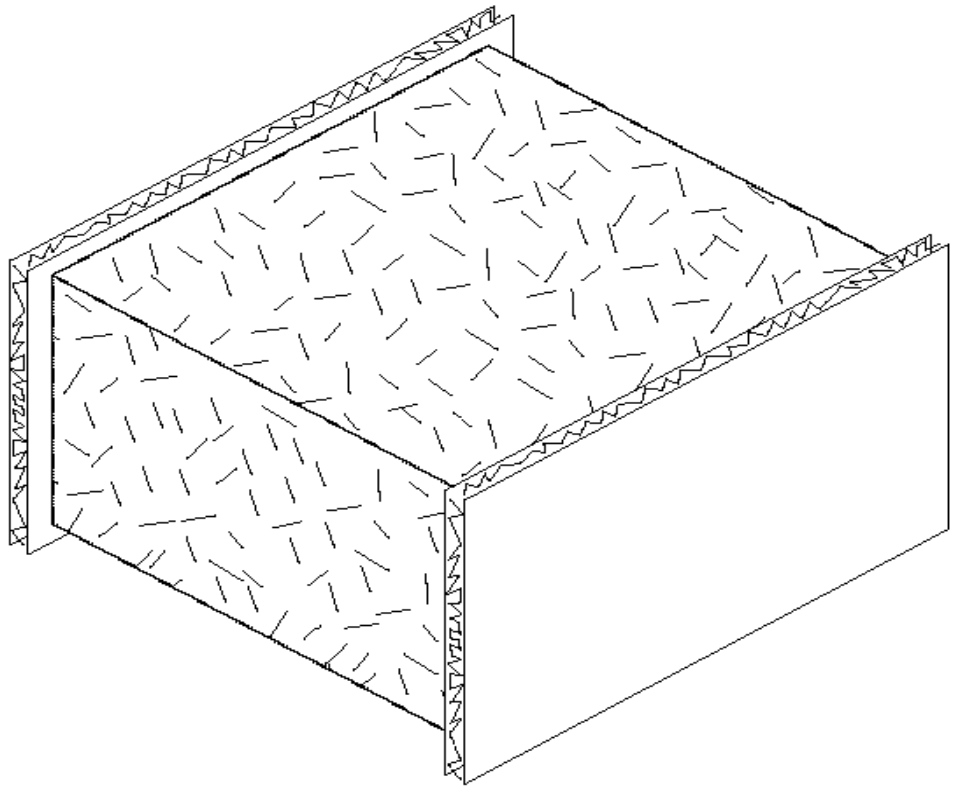

Figure 4.3.12 – Straw Bale Wall

Assumptions: The construction consists of an exterior film of R-0.17, stucco and lath of R-0.18, the straw bale, interior plaster of R-0.47, and an interior air film of 0.68. Straw bale must have a minimum cross section of 22 inch by 16 inch, and shall have a thermal resistance of R-30, whether stacked so the walls are 23 inch wide or 16 inch wide. Due to the higher resistance to heat flow across the grain of the straws, a bale laid on edge with a nominal 16 inch horizontal thickness has the same R-value (R-30) as a bale laid flat. Framing is assumed to not penetrate more than 25 percent of the way through the straw bale.

Table 4.3.13 – Thermal Properties of Insulating Concrete Forms

Insulation Type	Insulation Thickness Per Side (Total R-Value)	Performance Factor		Flat[1]					Waffle Grid[2]		Screen Grid[2]
				Concrete Core Thickness (inches)							
				4	6	8	10	12	6	8	6
				A	B	C	D	E	F	G	H
EPS[3]	2.0 (15.4)	U-factor	1	0.058	0.057	0.056	0.055	0.055	0.047	0.039	0.041
		HC		12.20	17.00	21.80	26.60	31.40	13.90	15.87	12.10
	2.25 (18.9)	U-factor	2	0.052	0.051	0.051	0.050	0.050	0.043	0.036	0.038
		HC		12.22	17.02	21.82	26.62	31.42	13.92	15.89	12.11
	2.5 (19.25)	U-factor	3	0.047	0.047	0.046	0.046	0.045	0.040	0.034	0.036
		HC		12.24	17.04	21.84	26.64	31.44	13.94	15.91	12.13
	2.625 (20.2)	U-factor	4	0.045	0.045	0.044	0.044	0.043	0.038	0.033	0.035
		HC		12.25	17.05	21.85	26.65	31.45	13.95	15.92	12.14
	2.75 (21.2)	U-factor	5	0.043	0.043	0.042	0.042	0.042	0.037	0.032	0.0323
		HC		12.26	17.06	21.86	26.66	31.46	13.96	15.92	12.15
	3.0 (23.1)	U-factor	6	0.040	0.040	0.039	0.039	0.039	0.0334	0.030	0.031
		HC		12.27	17.07	21.87	26.67	31.47	13.98	15.94	12.17
	3.5 (27.0)	U-factor	7	0.035	0.034	0.034	0.034	0.034	0.030	0.027	0.028
		HC		12.31	17.11	21.91	26.71	31.51	14.01	15.98	12.21
	4.0 (30.8)	U-factor	8	0.031	0.030	0.030	0.030	0.030	0.027	0.024	0.025
		HC		12.35	17.15	21.95	26.75	31.55	14.05	16.02	12.24
XPS	2.0 (20.0)	U-factor	9	0.045	0.045	0.045	0.044	0.044	NA	NA	NA
		HC		12.29	17.09	21.89	26.69	31.49	NA	NA	NA
	2.5 (25.0)	U-factor	10	0.037	0.037	0.036	0.036	0.036	NA	NA	NA
		HC		12.35	17.15	21.95	26.75	31.55	NA	NA	NA
	2.625 (26.3)	U-factor	11	0.035	0.035	0.035	0.035	0.034	NA	NA	NA
		HC		12.36	17.16	21.96	26.76	31.56	NA	NA	NA
	2.75 (27.5)	U-factor	12	0.034	0.034	0.033	0.033	0.033	NA	NA	NA
		HC		12.38	17.18	21.98	26.78	31.58	NA	NA	NA
	3.0 (30.0)	U-factor	13	0.031	0.031	0.031	0.031	0.030	NA	NA	NA
		HC		12.41	17.21	22.01	26.81	31.61	NA	NA	NA
	3.5 (35.0)	U-factor	14	0.027	0.027	0.027	0.027	0.026	NA	NA	NA
		HC		12.46	17.26	22.06	26.86	31.66	NA	NA	NA
	4.0 (40)	U-factor	15	0.024	0.024	0.024	0.023	0.023	NA	NA	NA
		HC		12.52	17.32	22.12	26.92	31.72	NA	NA	NA
Polyurethane	1.5 (9.09)	U-factor	16	0.050	0.049	0.049	0.048	0.048	NA	NA	NA
		HC		12.23	17.03	21.83	26.63	31.43	NA	NA	NA
	2.0 (10.9)	U-factor	17	0.042	0.042	0.041	0.041	0.041	NA	NA	NA
		HC		12.41	17.21	22.01	26.81	31.61	NA	NA	NA
	4.5 (20.95)	U-factor	18	0.023	0.023	0.023	0.022	0.022	NA	NA	NA
		HC		12.58	17.38	22.18	26.98	31.78	NA	NA	NA
Cement/EPS Compound	2.0 (12.0)	U-factor	19	NA	NA	NA	NA	NA	0.059	0.048	0.052
		HC		NA	NA	NA	NA	NA	16.49	18.46	14.69
	3.0 (18.0)	U-factor	20	NA	NA	NA	NA	NA	0.043	0.037	0.040
		HC		NA	NA	NA	NA	NA	17.50	19.47	15.69
	4.0 (24.0)	U-factor	21	NA	NA	NA	NA	NA	0.034	0.031	0.032
		HC		NA	NA	NA	NA	NA	18.51	20.47	16.70

Notes:

[1] Flat Insulated Concrete Forms utilizes rigid insulation as the form and do not use cement compound as the form.

[2] Waffle and screen type Insulated Concrete Forms typically utilize either a cement/EPS compound or EPS insulation as the form. ICF's using the cement/EPS compound do not utilize rigid insulation added to the interior and exterior surfaces.

[3] 1.5 lb density EPS insulation at R-3.85 per inch except for the 2.25" insulation thickness which uses 2.0 lb density EPS at R-4.2 per inch.

This table provides thermal performance information for insulating concrete forms.

Insulating Concrete Forms (ICFs) are concrete forming systems that use stay-in-place panels made from a variety of insulating materials for constructing cast-in-place solid concrete walls. There are three basic types of ICFs: flat wall, waffle-grid and screen-grid. A flat wall system is a wall with uniform thickness just like a conventional poured wall made with plywood or metal forms. Waffle-grid wall systems have a solid concrete wall of varying thickness and look like a breakfast waffle. Screen grid wall systems also known as , "post and beam", have a perforated concrete wall of varying thickness similar to the waffle type wall systems but with a solid form material between the horizontal and vertical members instead of concrete. The insulating panels for all three ICF types are most commonly made from expanded polystyrene (EPS) and extruded polystyrene (XPS) rigid insulation boards. Plastic or metal cross-ties separate the insulating

panels and provide structural integrity during the pour. The ICF system is modular and stackable with interlocking edges. The materials can be delivered as pre-assembled blocks or as planks that require the flanges and web to be assembled during construction.

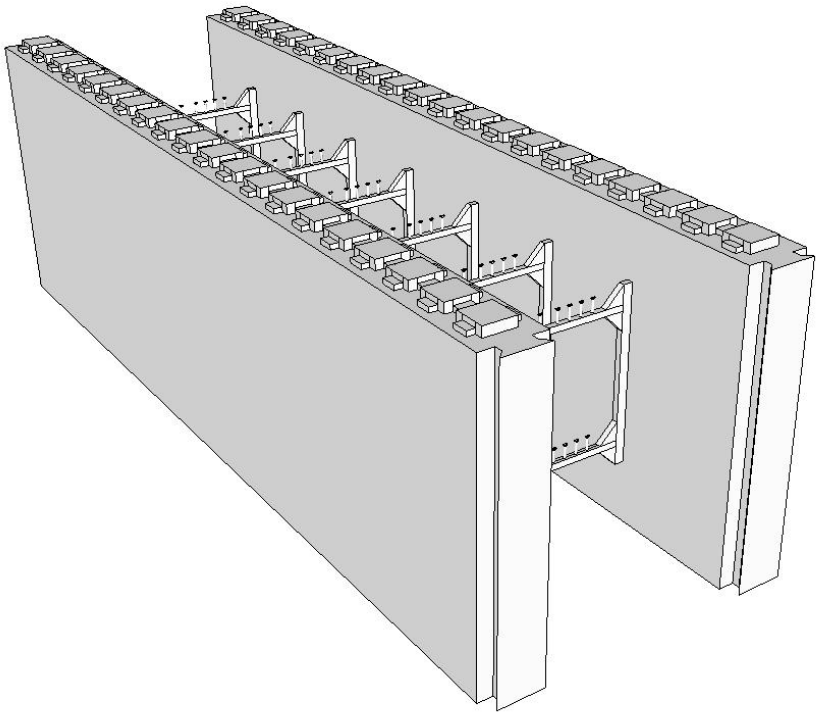

Figure 4.3.13 – Insulating Concrete Forms

Assumptions: Values in this table were calculated using the one dimensional calculation method documented in 2009 ASHRAE Handbook of Fundamentals. The calculations assume an exterior air film of R-0.17, a 7/8 inch layer of stucco of R-0.18, building paper of R-0.06, an exterior insulating form of varying resistance, a concrete core of varying thickness at R-0.11 per inch, an interior insulating form of varying resistance, and an interior air film of R-0.68. The R-value of the cement/EPC compound is assumed to be R-3.0 per inch, the XPS insulation assumed to be R-5.0 per inch, and the polyurethane assumed to be aged and dried in 1.5 inch, 2.0 inch, and 4.5 inch thickness.

Table 4.3.14 – Effective R-values for Interior or Exterior Insulation Layers

			R-value of Insulation Installed in Furring Space																					
			0	1	2	3	4	5	6	7	8	9	10	11	12	13	14	15	16	17	18	19	20	21
Thick-ness	Frame Type		A	B	C	D	E	F	G	H	I	J	K	L	M	N	O	P	Q	R	S	T	U	V
Any	None	1	0.5	1.5	2.5	3.5	4.5	5.5	6.5	7.5	8.5	9.5	10.5	11.5	12.5	13.5	14.5	15.5	16.5	17.5	18.5	19.5	20.5	21.5
0.5"	Wood	2	1.3	1.3	1.9	2.4	2.7	n.a.	n.a.	n.a.	n.a.	n.a.	n.a.	n.a.	n.a.	n.a.	n.a.	n.a.	n.a.	n.a.	n.a.	n.a.	n.a.	n.a.
	Metal	3	0.9	0.9	1.1	1.1	1.2	n.a.	n.a.	n.a.	n.a.	n.a.	n.a.	n.a.	n.a.	n.a.	n.a.	n.a.	n.a.	n.a.	n.a.	n.a.	n.a.	n.a.
0.75"	Wood	4	1.4	1.4	2.1	2.7	3.1	3.5	3.8	n.a.	n.a.	n.a.	n.a.	n.a.	n.a.	n.a.	n.a.	n.a.	n.a.	n.a.	n.a.	n.a.	n.a.	n.a.
	Metal	5	1.0	1.0	1.3	1.4	1.5	1.5	1.6	n.a.	n.a.	n.a.	n.a.	n.a.	n.a.	n.a.	n.a.	n.a.	n.a.	n.a.	n.a.	n.a.	n.a.	n.a.
1.0"	Wood	6	1.3	1.5	2.2	2.9	3.4	3.9	4.3	4.6	4.9	n.a.	n.a.	n.a.	n.a.	n.a.	n.a.	n.a.	n.a.	n.a.	n.a.	n.a.	n.a.	n.a.
	Metal	7	1.0	1.1	1.4	1.6	1.7	1.8	1.8	1.9	1.9	n.a.	n.a.	n.a.	n.a.	n.a.	n.a.	n.a.	n.a.	n.a.	n.a.	n.a.	n.a.	n.a.
1.5"	Wood	8	1.3	1.5	2.4	3.1	3.8	4.4	4.9	5.4	5.8	6.2	6.5	6.8	7.1	n.a.	n.a.	n.a.	n.a.	n.a.	n.a.	n.a.	n.a.	n.a.
	Metal	9	1.1	1.2	1.6	1.9	2.1	2.2	2.3	2.4	2.5	2.5	2.6	2.6	2.7	n.a.	n.a.	n.a.	n.a.	n.a.	n.a.	n.a.	n.a.	n.a.
2"	Wood	10	1.4	1.5	2.5	3.3	4.0	4.7	5.3	5.9	6.4	6.9	7.3	7.7	8.1	8.4	8.7	9.0	9.3	n.a.	n.a.	n.a.	n.a.	n.a.
	Metal	11	1.1	1.2	1.7	2.1	2.3	2.5	2.7	2.8	2.9	3.0	3.1	3.2	3.2	3.3	3.3	3.4	3.4	n.a.	n.a.	n.a.	n.a.	n.a.
2.5"	Wood	12	1.4	1.5	2.5	3.4	4.2	4.9	5.6	6.3	6.8	7.4	7.9	8.4	8.8	9.2	9.6	10.0	10.3	10.6	10.9	11.2	11.5	n.a.
	Metal	13	1.2	1.3	1.8	2.3	2.6	2.8	3.0	3.2	3.3	3.5	3.6	3.6	3.7	3.8	3.9	3.9	4.0	4.0	4.1	4.1	4.1	n.a.
3"	Wood	14	1.4	1.5	2.5	3.5	4.3	5.1	5.8	6.5	7.2	7.8	8.3	8.9	9.4	9.9	10.3	10.7	11.1	11.5	11.9	12.2	12.5	12.9
	Metal	15	1.2	1.3	1.9	2.4	2.8	3.1	3.3	3.5	3.7	3.8	4.0	4.1	4.2	4.3	4.4	4.4	4.5	4.6	4.6	4.7	4.7	4.8
3.5"	Wood	16	1.4	1.5	2.6	3.5	4.4	5.2	6.0	6.7	7.4	8.1	8.7	9.3	9.8	10.4	10.9	11.3	11.8	12.2	12.6	13.0	13.4	13.8
	Metal	17	1.2	1.3	2.0	2.5	2.9	3.2	3.5	3.8	4.0	4.2	4.3	4.5	4.6	4.7	4.8	4.9	5.0	5.1	5.1	5.2	5.2	5.3
4"	Wood	18	1.4	1.6	2.6	3.6	4.5	5.3	6.1	6.9	7.6	8.3	9.0	9.6	10.2	10.8	11.3	11.9	12.4	12.8	13.3	13.7	14.2	14.6
	Metal	19	1.2	1.3	2.0	2.6	3.0	3.4	3.7	4.0	4.2	4.5	4.6	4.8	5.0	5.1	5.2	5.3	5.4	5.5	5.6	5.7	5.8	5.8
4.5"	Wood	20	1.4	1.6	2.6	3.6	4.5	5.4	6.2	7.1	7.8	8.5	9.2	9.9	10.5	11.2	11.7	12.3	12.8	13.3	13.8	14.3	14.8	15.2
	Metal	21	1.2	1.3	2.1	2.6	3.1	3.5	3.9	4.2	4.5	4.7	4.9	5.1	5.3	5.4	5.6	5.7	5.8	5.9	6.0	6.1	6.2	6.3
5"	Wood	22	1.4	1.6	2.6	3.6	4.6	5.5	6.3	7.2	8	8.7	9.4	10.1	10.8	11.5	12.1	12.7	13.2	13.8	14.3	14.8	15.3	15.8
	Metal	23	1.2	1.4	2.1	2.7	3.2	3.7	4.1	4.4	4.7	5.0	5.2	5.4	5.6	5.8	5.9	6.1	6.2	6.3	6.5	6.6	6.7	6.8
5.5"	Wood	24	1.4	1.6	2.6	3.6	4.6	5.5	6.4	7.3	8.1	8.9	9.6	10.3	11.0	11.7	12.4	13.0	13.6	14.2	14.7	15.3	15.8	16.3
	Metal	25	1.3	1.4	2.1	2.8	3.3	3.8	4.2	4.6	4.9	5.2	5.4	5.7	5.9	6.1	6.3	6.4	6.6	6.7	6.8	7.0	7.1	7.2
EIFS		26	0.0	1.0	2.0	3.0	4.0	5.0	6.0	7.0	8.0	9.0	10.0	11.0	12.0	13.0	14.0	15.0	16.0	17.0	18.0	19.0	20.0	21.0

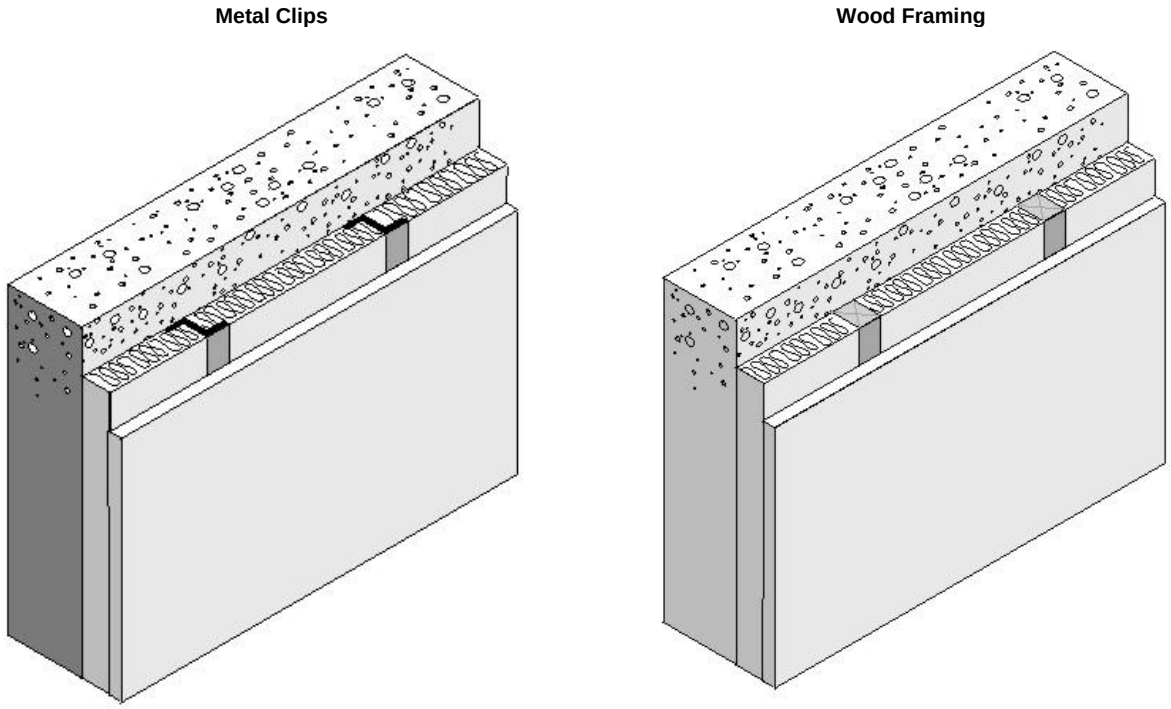

Figure 4.3.14 – Interior or Exterior Insulation Layers

This table is used in combination with other tables and Equation 4-1 and Equation 4-2 to account for interior furring and continuous insulation added to other constructions.

Assumptions: Data is taken from ASHRAE/IESNA Standard 90.1-2004 All furring thickness values given are actual dimensions. All values include 0.5 inch gypsum board on the inner surface, interior surface resistances not included. The metal furring is 24 inch on center, 24 gauge, Z-type Metal Furring. The wood furring is 24 inch on center, Douglas-Fir Larch Wood Furring, density = 34.9 lb/ft³. Insulation assumed to fill the furring space.

4.4 Floors and Slabs

Table 4.4.1 – Standard U-factors for Wood-Framed Floors with a Crawl Space

Framing Spacing	Nominal Framing Size	R-Value Cavity Insul.		Rated R-value of Continuous Insulation							
				R-0	R-2	R-4	R-6	R-7	R-8	R-10	R-14
				A	B	C	D	E	F	G	H
16 in. OC	Any 2 x 6	None	1	0.097	0.081	0.070	0.061	0.058	0.055	0.049	0.041
		R-11	2	0.049	0.045	0.041	0.038	0.037	0.035	0.033	0.029
		R-13	3	0.046	0.042	0.039	0.036	0.035	0.033	0.031	0.028
		R-19	4	0.037	0.034	0.032	0.030	0.029	0.029	0.027	0.024
	2 x 8	R-19	5	0.037	0.034	0.032	0.030	0.029	0.029	0.027	0.024
		R-22	6	0.034	0.032	0.030	0.028	0.027	0.027	0.025	0.023
	2 x 10	R-25	7	0.031	0.029	0.028	0.026	0.025	0.025	0.024	0.022
		R-30	8	0.028	0.026	0.025	0.024	0.023	0.023	0.022	0.020
	2 x 12	R-38	9	0.024	0.023	0.022	0.021	0.020	0.020	0.019	0.018
24 in. OC	Any 2 x 6	None	10	0.098	0.082	0.070	0.062	0.058	0.055	0.049	0.041
		R-11	11	0.049	0.045	0.041	0.038	0.036	0.035	0.033	0.029
		R-13	12	0.045	0.041	0.038	0.035	0.034	0.033	0.031	0.028
		R-19	13	0.037	0.034	0.032	0.030	0.029	0.028	0.027	0.024
	2 x 8	R-19	14	0.036	0.034	0.032	0.030	0.029	0.028	0.027	0.024
		R-22	15	0.033	0.031	0.029	0.028	0.027	0.026	0.025	0.023
	2 x 10	R-25	16	0.030	0.029	0.027	0.026	0.025	0.024	0.023	0.021
		R-30	17	0.027	0.026	0.024	0.023	0.023	0.022	0.021	0.020
	2 x 12	R-38	18	0.023	0.022	0.021	0.020	0.020	0.020	0.019	0.017

Notes:

1. In order to use the U-factors listed in this section, exterior raised-floor insulation shall be installed between floor joists with a means of support that prevents the insulation from falling, sagging or deteriorating. Two approaches that accomplish this are:
2. Nailing insulation hangers 18 inches apart prior to rolling out the insulation. Hangers are heavy wires up to 48 inches long with pointed ends, which provide positive wood penetration.
3. Attaching wire mesh to form a basket between joists to support the insulation. Mesh is nailed or stapled to the underside of the joists.

This table contains U-factors for wood framed floors built over a ventilated crawlspace. This construction is common for low-rise residential buildings and for Type IV nonresidential buildings.

If continuous insulation is not used, then choices are made from Column A. In this case, the insulation is installed only between the framing members. Continuous insulation is not common for wood floors over a crawlspace, but if credit is taken, the insulation may be installed either above or below the framing members. The continuous insulation is typically a rigid polystyrene or polyisocyanurate foam insulation.

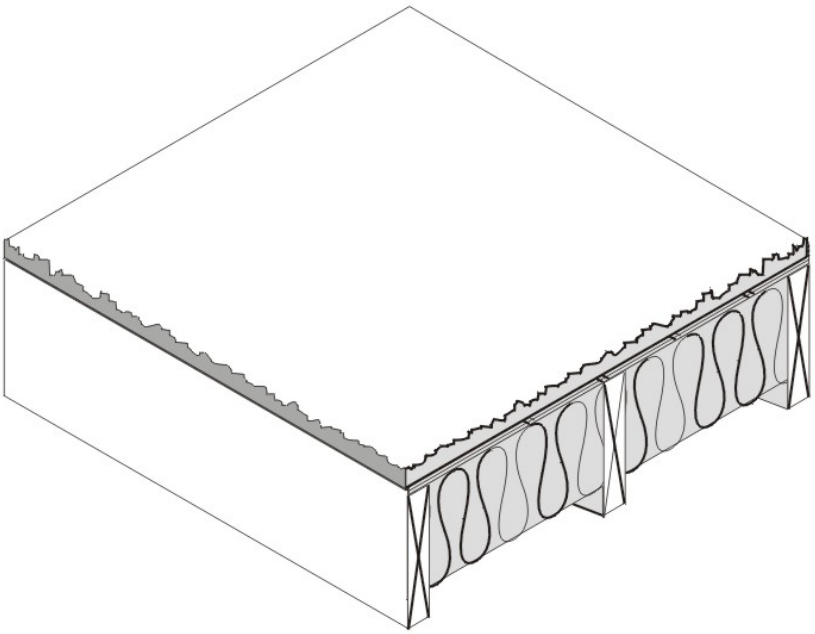

Figure 4.4.1 – Wood Framed Floor with a Crawl Space

When this table is used manually, the R-value of continuous insulation shall be equal to or greater than the R-value published in the continuous insulation columns. Continuous insulation of at least R-2 must exist in order to use columns B and beyond. No interpolation is permitted when data from the table is used manually. ~~CEC~~ Commission approved compliance software, however, may determine the U-factor for any amount of continuous insulation or for unusual construction assemblies using Equation 4-1 and Equation 4-2.

If the crawlspace is not ventilated and is modeled as a controlled ventilation crawlspace (CVC), then values from this table shall not be used. Values from Table 4.21 shall be used instead and the crawlspace shall be modeled as a separate and unconditioned zone.

Assumptions: Calculations use the ASHRAE parallel heat flow method documented in the 2005 ASHRAE Handbook of Fundamentals. These calculations assume an exterior air film of R-0.17, a vented crawlspace for an effective R-6, a continuous insulation layer (if any), the insulation / framing layer, 5/8 inch wood based sheathing (Custom), carpet and pad of R-2.08 (CP01), and an interior air film (heat flow down) of R-0.92. The framing factor is assumed to be 10 percent for 16 inch stud spacing and 7 percent for 24 inch spacing.

Table 4.4.2 – Standard U-factors for Wood Framed Floors without a Crawl Space

Spacing	Nominal Framing Size	R-Value of Cavity Insul.		Rated R-value of Continuous Insulation							
				R-0	R-2	R-4	R-6	R-7	R-8	R-10	R-14
				A	B	C	D	E	F	G	H
16 in. OC	Any	None	**1**	0.238	0.161	0.122	0.098	0.089	0.082	0.070	0.055
	2 x 6	R-11	**2**	0.071	0.062	0.055	0.050	0.047	0.045	0.041	0.036
	(5.50 in)	R-13	**3**	0.064	0.057	0.051	0.046	0.044	0.042	0.039	0.034
		R-19	**4**	0.049	0.044	0.040	0.037	0.036	0.035	0.032	0.028
	2 x 8	R-19	**5**	0.048	0.044	0.040	0.037	0.036	0.035	0.033	0.029
	(7.25 in.)	R-22	**6**	0.044	0.040	0.037	0.035	0.033	0.032	0.030	0.027
	2 x 10	R-25	**7**	0.039	0.036	0.034	0.031	0.030	0.030	0.028	0.025
	(9.25 in.)	R-30	**8**	0.034	0.032	0.030	0.028	0.028	0.027	0.025	0.023
	2 x 12	R-38	**9**	0.029	0.027	0.026	0.024	0.024	0.023	0.022	0.020
	(11.25 in.)										
24 in. OC	Any	None	**10**	0.243	0.163	0.123	0.099	0.090	0.083	0.071	0.055
	2 x 6	R-11	**11**	0.070	0.061	0.054	0.049	0.047	0.045	0.041	0.035
	(5.50 in.)	R-13	**12**	0.062	0.055	0.050	0.045	0.043	0.042	0.038	0.033
		R-19	**13**	0.047	0.043	0.039	0.037	0.035	0.034	0.032	0.028
	2 x 8	R-19	**14**	0.047	0.043	0.039	0.037	0.035	0.034	0.032	0.028
	(7.25 in.)	R-22	**15**	0.042	0.039	0.036	0.034	0.033	0.032	0.030	0.026
	2 x 10	R-25	**16**	0.037	0.035	0.033	0.031	0.030	0.029	0.027	0.025
	(9.25 in.)	R-30	**17**	0.033	0.031	0.029	0.027	0.027	0.026	0.025	0.022
	2 x 12	R-38	**18**	0.027	0.026	0.025	0.023	0.023	0.022	0.021	0.020
	(11.25 in.)										

This table contains U-factors for wood framed floors that are exposed to ambient (outdoor) conditions. This construction is common for low-rise residential buildings and for Type 4 nonresidential buildings.

If continuous insulation is not used, then choices are made from Column A. In this case, the insulation is installed only between the framing members. If credit is taken for continuous insulation, the insulation may be installed either above or below the framing members.

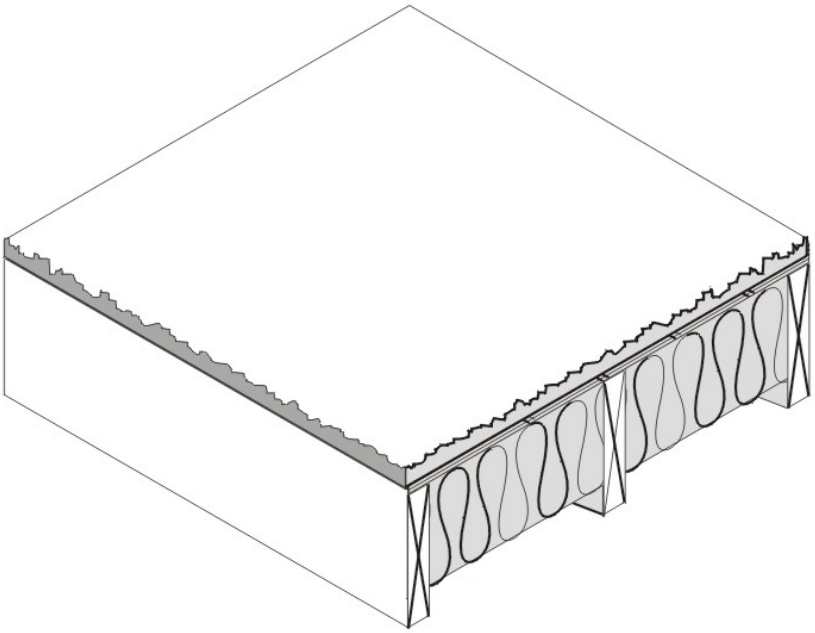

Figure 4.4.2 – Wood Framed Floor without a Crawl Space

When this table is used manually, the R-value of continuous insulation shall be equal to or greater than the R-value published in the continuous insulation columns. No interpolation is permitted when data from the table is used manually. ~~CEC~~ Commission approved compliance software, however, may determine the U-factor for any amount of continuous insulation or for unusual construction assemblies using Equation 4-1 and Equation 4-2.

Assumptions: Calculations use the ASHRAE parallel heat flow method documented in the 2009 ASHRAE Handbook of Fundamentals. These calculations assume an exterior air film of R-0.17, a continuous insulation layer (if any), the cavity insulation / framing layer, 5/8 inch wood based sheathing (Custom), carpet and pad of R-2.08 (CP01), and an interior air film (heat flow down) of R-0.92.

Table 4.4.3 – Standard U-factors for Wood Foam Panel (SIP) Floors

Crawlspace	Insulation R-value[1]	Wood Framing Spline Connection Type (Splines)	Typical Panel Thickness		Rated R-value of Continuous Insulation [3]						
					None	R-2	R-4	R-6	R-7	R-8	R-10
					A	B	C	D	E	F	G
YES	R-22	Single 2x	6.5 in	**1**	0.033	0.030	0.029	0.027	0.026	0.026	0.024
	R-22	Double 2x	6.5 in	**2**	0.034	0.031	0.029	0.028	0.027	0.026	0.025
	R-22	I-Joist	6.5 in	**3**	0.032	0.030	0.028	0.027	0.026	0.025	0.024
	R-28	Single 2x	8.25 in	**4**	0.027	0.026	0.024	0.023	0.023	0.022	0.021
	R-28	Double 2x	8.25 in	**5**	0.028	0.026	0.025	0.024	0.023	0.023	0.022
	R-28	I-Joist	8.25 in	**6**	0.027	0.025	0.024	0.023	0.022	0.022	0.021
	R-33[2]	Single 2x	6.5 in	**7**	0.024	0.023	0.022	0.021	0.021	0.020	0.019
	R-33[2]	Double 2x	6.5 in	**8**	0.026	0.024	0.023	0.022	0.021	0.021	0.020
	R-33[2]	I-Joist	6.5 in	**9**	0.024	0.023	0.022	0.021	0.020	0.020	0.019
	R-36	Single 2x	10.25 in	**10**	0.023	0.022	0.021	0.020	0.019	0.019	0.018
	R-36	Double 2x	10.25 in	**11**	0.024	0.022	0.021	0.020	0.020	0.020	0.019
	R-36	I-Joist	10.25 in	**12**	0.022	0.021	0.020	0.019	0.019	0.019	0.018
NO	R-22	Single 2x	6.5 in	**13**	0.041	0.038	0.035	0.033	0.031	0.030	0.029
	R-22	Double 2x	6.5 in	**14**	0.043	0.039	0.036	0.034	0.032	0.031	0.029
	R-22	I-Joist	6.5 in	**15**	0.040	0.037	0.034	0.032	0.031	0.030	0.028
	R-28	Single 2x	8.25 in	**16**	0.033	0.030	0.029	0.027	0.026	0.026	0.024
	R-28	Double 2x	8.25 in	**17**	0.034	0.032	0.030	0.028	0.027	0.026	0.025
	R-28	I-Joist	8.25 in	**18**	0.032	0.030	0.028	0.027	0.026	0.025	0.024
	R-33[2]	Single 2x	6.5 in	**19**	0.029	0.027	0.026	0.024	0.024	0.023	0.022
	R-33[2]	Double 2x	6.5 in	**20**	0.032	0.029	0.027	0.026	0.025	0.024	0.023

	R-33[2]	I-Joist	6.5 in	**21**	0.028	0.027	0.025	0.024	0.023	0.023	0.022
	R-36	Single 2x	10.25 in	**22**	0.026	0.025	0.024	0.023	0.022	0.022	0.021
	R-36	Double 2x	10.25 in	**23**	0.028	0.026	0.025	0.024	0.023	0.022	0.021
	R-36	I-Joist	10.25 in	**24**	0.026	0.024	0.023	0.022	0.021	0.021	0.020

Notes:

1. The insulation R-value must be at least R-21.7 in order to use this table. This table assumes moulded expanded polystyrene (EPS) unless noted otherwise. Although other insulation types are used by some SIP manufacturers, such as polyurethane and extruded expanded insulation (XPS), EPS is the most common insulation used in SIP construction.
2. R-33.2 is achievable using polyurethane insulation in 6.5" panels.
3. Continuous insulation shall be at least R-2 and may be installed on either the inside or the exterior of the roof/ceiling.

Structural insulated panels (SIPs) consist of a rigid insulation core, securely bonded between two structural facings, to form a structural sandwich panel. SIPs are considered a non-framed assembly usually with little or no structural framing that penetrates the insulation layer, resulting in less thermal bridging across the insulation when compared to a conventional framed assembly.

If continuous insulation is not used, then choices are made from Column A. When continuous insulation is also used, this is typically installed on the exterior side of the floor, but can also be used on the inside. The continuous insulation is typically a rigid polystyrene or polyisocyanurate foam insulation.

When this table is used manually, the R-value of continuous insulation shall be equal to or greater than the R-value published in the continuous insulation columns. Commission approved compliance software, however, may determine the U-factor for any amount of continuous insulation or for unusual construction assemblies using Equation 4-1 and Equation 4-2.

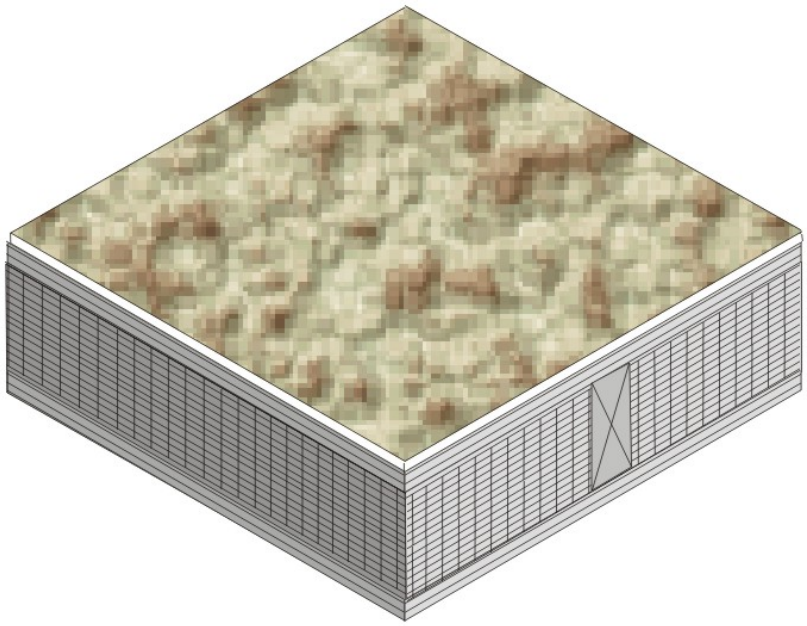

Figure 4.4.3 – Wood Foam Panel (SIP) Floor

Assumptions: These data are calculated using the parallel path method documented in the 2009 ASHRAE Handbook of Fundamentals. These calculations assume an exterior air film of R-0.17, a vented crawlspace of R-6, 7/16 inch of OSB at R-0.44, framing factor of 2%, 7/16 inch of OSB, carpet and pad of R-2.08 and an interior air film of R-0.92.

Table 4.4.4 – Standard U-factors for Metal-Framed Floors with a Crawl Space

Framing Spacing	Nominal Framing Size	Cavity Insulation R-Value:		Rated R-value of Continuous Insulation							
				R-0	R-2	R-4	R-6	R-7	R-8	R-10	R-14
				A	B	C	D	E	ºF	G	H
16 in. OC	Any	None	1	0.094	0.079	0.068	0.060	0.057	0.054	0.048	0.041
	2 x 6	R-11	2	0.065	0.058	0.052	0.047	0.045	0.043	0.039	0.034
		R-13	3	0.063	0.056	0.050	0.046	0.044	0.042	0.039	0.033
		R-19	4	0.059	0.053	0.048	0.044	0.042	0.040	0.037	0.032
	2 x 8	R-19	5	0.058	0.052	0.047	0.043	0.041	0.040	0.037	0.032
		R-22	6	0.056	0.050	0.046	0.042	0.040	0.039	0.036	0.031
	2 x 10	R-30	7	0.051	0.046	0.042	0.039	0.038	0.036	0.034	0.030
	2 x 12	R-38	8	0.048	0.044	0.040	0.037	0.036	0.035	0.032	0.029
24 in. OC	Any	None	9	0.094	0.079	0.068	0.060	0.057	0.054	0.048	0.041
	2 x 6	R-11	10	0.061	0.054	0.049	0.045	0.043	0.041	0.038	0.033
		R-13	11	0.058	0.052	0.047	0.043	0.041	0.040	0.037	0.032
		R-19	12	0.053	0.048	0.044	0.040	0.039	0.037	0.035	0.030
	2 x 8	R-19	13	0.051	0.046	0.042	0.039	0.038	0.036	0.034	0.030
		R-22	14	0.049	0.045	0.041	0.038	0.036	0.035	0.033	0.029
	2 x 10	R-30	15	0.045	0.041	0.038	0.035	0.034	0.033	0.031	0.028
	2 x 12	R-38	16	0.041	0.038	0.035	0.033	0.032	0.031	0.029	0.026

Notes:

In order to use the U-factors listed in this table, exterior raised-floor insulation shall be installed between floor joists with a means of support that prevents the insulation from falling, sagging or deteriorating. Two approaches that accomplish this are:

1. Attaching insulation hangers 18 inches apart prior to rolling out the insulation. Hangers are heavy wires up to 48 inches long with pointed ends.
2. Attaching wire mesh to form a basket between joists to support the insulation. Mesh is nailed or stapled to the underside of the joists.

This table contains U-factors for metal-framed floors built over a crawlspace. The constructions represented are similar to those in Table 4.4.1, except that wood framing is replaced with metal framing. Cavity insulation is installed between the framing members. Since the steel is not as large a cross section as wood, the insulation needs to be wider than that used with wood to fit in between the steel framing members.

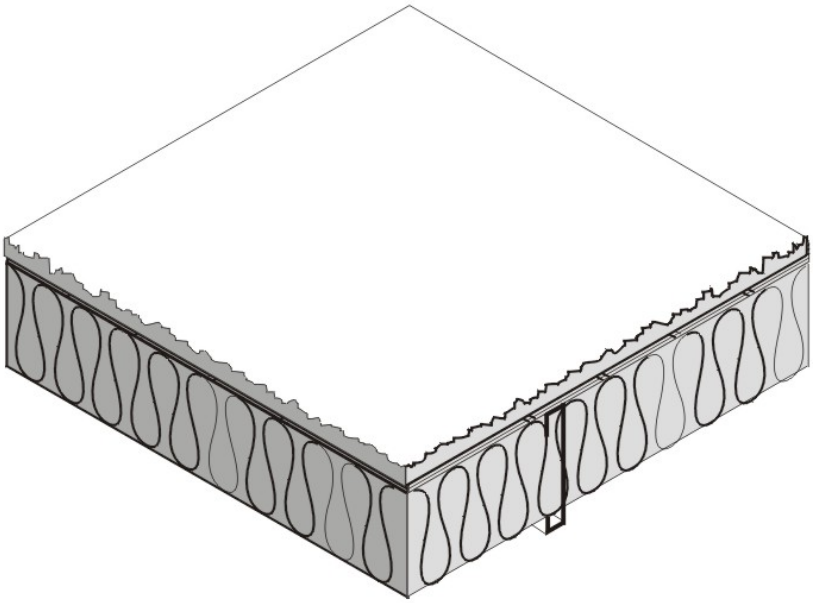

Figure 4.4.4 – Metal Framed Floors with a Crawl Space

For the majority of cases, values will be selected from column A of this table. Column A applies for the common situation where batt insulation is supported between framing members. Builders or designers may increase thermal performance by adding a continuous insulation layer either above or below the framing members.

When this table is used manually, the R-value of continuous insulation shall be equal to or greater than the R-value published in the continuous insulation columns. No interpolation is permitted when data from the table is used manually. ~~CEC~~ Commission approved compliance software, however, may determine the U-factor for any amount of continuous insulation and for unusual construction layers using Equation 4-1 and Equation 4-2.

Assumptions: Calculations are based on the ASHRAE Zone Method Calculation, 2009 ASHRAE Handbook of Fundamentals These calculations assume an exterior air film of R-0.17, a vented crawlspace for an effective R-6, a continuous insulation layer (if any), the insulation / framing layer, 5/8 inch wood based sheathing (Custom), carpet and pad of R-2.08 (CP01), and an interior air film (heat flow down) of R-0.92. The effect of the crawlspace is approximated by an additional R-6 of insulation. The internal default framing percentages are 10 percent for 16 inch on center and 7 percent for 24 inch on center. Steel Framing has a 1.5 inch flange and is 0.075 inch thick steel (14 gauge) with no knockouts. U-factors are calculated using EZ frame 2.0.

Table 4.4.5 – Standard U-factors for Metal-Framed Floors without a Crawl Space

				Rated R-value of Continuous Insulation							
	Nominal Framing Size	Cavity Insulation R-Value		R-0	R-2	R-4	R-6	R-7	R-8	R-10	R-14
Spacing				A	B	C	D	E	F	G	H
16 in. OC	Any	None	**1**	0.253	0.168	0.126	0.100	0.091	0.084	0.072	0.056
	2 x 6	R-11	**2**	0.108	0.089	0.075	0.066	0.062	0.058	0.052	0.043
		R-13	**3**	0.102	0.085	0.072	0.063	0.060	0.056	0.050	0.042
		R-19	**4**	0.092	0.078	0.067	0.059	0.056	0.053	0.048	0.040
	2 x 8	R-19	**5**	0.088	0.075	0.065	0.058	0.054	0.052	0.047	0.039
		R-22	**6**	0.085	0.073	0.063	0.056	0.053	0.051	0.046	0.039
	2 x 10	R-30	**7**	0.075	0.065	0.058	0.052	0.049	0.047	0.043	0.037
	2 x 12	R-38	**8**	0.068	0.060	0.053	0.048	0.046	0.044	0.040	0.035
24 in. OC	Any	None	**9**	0.253	0.168	0.126	0.100	0.091	0.084	0.072	0.056
	2 x 6	R-11	**10**	0.095	0.080	0.069	0.061	0.057	0.054	0.049	0.041
		R-13	**11**	0.087	0.074	0.065	0.057	0.054	0.051	0.047	0.039
		R-19	**12**	0.077	0.067	0.059	0.053	0.050	0.048	0.044	0.037
	2 x 8	R-19	**13**	0.074	0.064	0.057	0.051	0.049	0.046	0.043	0.036
		R-22	**14**	0.07	0.061	0.055	0.049	0.047	0.045	0.041	0.035
	2 x 10	R-30	**15**	0.061	0.054	0.049	0.045	0.043	0.041	0.038	0.033
	2 x 12	R-38	**16**	0.054	0.049	0.044	0.041	0.039	0.038	0.035	0.031

Notes:

In order to use the U-factors listed in this section, exterior raised-floor insulation shall be installed between floor joists with a means of support that prevents the insulation from falling, sagging or deteriorating. Two approaches that accomplish this are:

1. Attaching insulation hangers 18 inches apart prior to rolling out the insulation. Hangers are heavy wires up to 48 inches long with pointed ends.
2. Attaching wire mesh to form a basket between joists to support the insulation. Mesh is nailed or stapled to the underside of the joists.

This table contains U-factors for metal-framed floors built over outdoor conditions. For the majority of cases, values will be selected from column A of this table. Column A applies for the common situation where batt insulation is supported between framing members. Builders or designers may increase thermal performance by adding a continuous insulation layer either above or below the framing members.

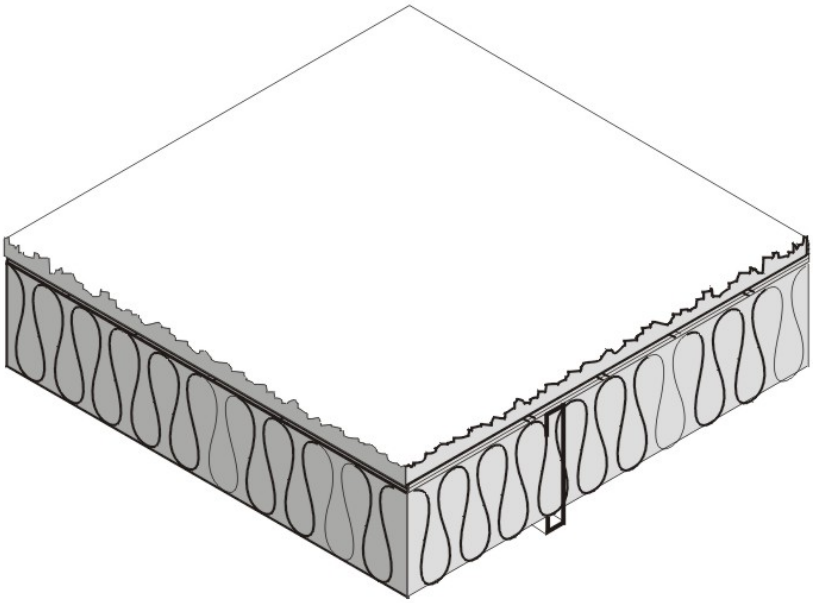

Figure 4.4.5 – Metal Framed Floors without a Crawl Space

When this table is used manually, the R-value of continuous insulation shall be equal to or greater than the R-value published in the continuous insulation columns. No interpolation is permitted when data from the table is used manually. ~~CEC~~ Commission approved compliance software, however, may determine the U-factor for any amount of continuous insulation and for unusual construction layers using Equation 4-1 and Equation 4-2.

Assumptions: Calculations are based on the ASHRAE Zone Method Calculation, 2009 ASHRAE Handbook of Fundamentals Handbook. These calculations assume an exterior air film of R-0.17, a continuous insulation layer (if any), the insulation / framing layer, 5/8 inch wood based sheathing (Custom), carpet and pad of R-2.08 (CP01), and an interior air film (heat flow down) of R-0.92. The internal default framing percentages are 10 percent for 16 inch on center and 7 percent for 24 inch on center. Steel Framing has a 1.5 inch flange and is 0.075 inch thick steel with no knockouts. U-factors calculated using EZ frame 2.0.

Table 4.4.6 – Standard U-factors for Concrete Raised Floors

R-value of Insulation		Rated R-value of Continuous Insulation		
		Continuous Insulation Underneath	**Continuous Insulation Above Deck[1]** with no Sleepers	**Continuous Insulation Above Deck[1]** with Sleepers
		A	**B**	**C**
R-0	**1**	0.269	0.234	0.229
R-2	**2**	0.183	0.159	0.157
R-4	**3**	0.138	0.121	0.120
R-6	**4**	0.111	0.097	0.097
R-8	**5**	0.092	0.081	0.081
R-10	**6**	0.079	0.070	0.070
R-12	**7**	0.069	0.061	0.061
R-15	**8**	0.058	0.052	0.052
R-20	**9**	0.045	0.041	0.041
R-25	**10**	0.037	0.034	0.034
R-30	**11**	0.031	0.029	0.029

Notes:

[1] Above deck case includes a 5/8 inch layer of plywood between the insulation and the carpet and pad.

This table may be used only if the HC of the proposed design floor is greater than or equal to 7.0 Btu/ft²-ºF.

Continuous Insulation Underneath

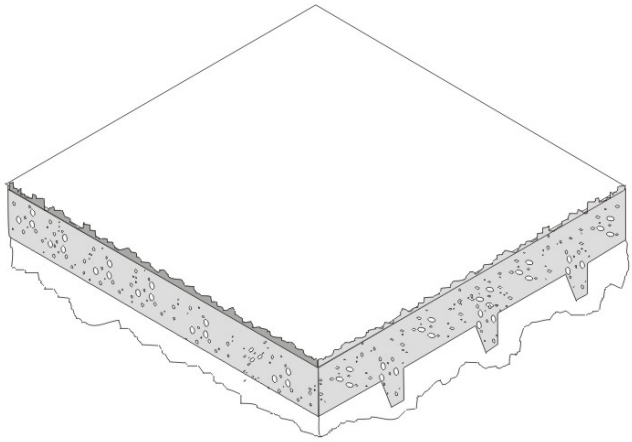

Continuous Insulation Above Deck

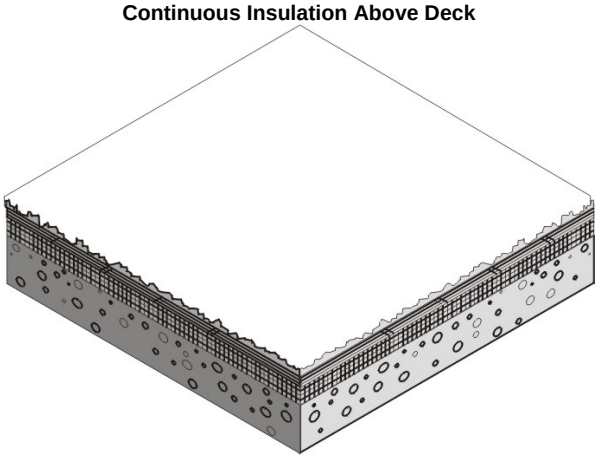

Figure 4.4.6 – Concrete Raised Floors

Assumptions: These calculations assume an exterior air film of R-0.17, a continuous insulation layer (if any), 4 inches of the lightweight concrete (CC14) over metal deck R-0, a continuous insulation layer (if any), 1.5 x 3.5 inch sleeper of R-0.99 per inch, R-0.80 air space between sleepers (2005 ASHRAE Handbook of Fundamentals, Chapter 25, Table 3), 5/8 inches of wood based sheathing (Custom) (if continuous insulation above deck), carpet and pad of R-2.08 (CP01), and an interior air film (heat flow down) of R-0.92. Sleepers have 10 percent framing factor. Below slab insulation assumes 6 inch wide beams 96 inches on center extending 8 inches below the slab.

Table 4.4.7 – F-Factors for Unheated Slab-on-Grade Floors

Insulation Description		Rated R-Value of Insulation												
		R-0	R-5	R-7.5	R-10	R-15	R-20	R-25	R-30	R-35	R-40	R-45	R-50	R-55
		A	**B**	**C**	**D**	**E**	**F**	**G**	**H**	**I**	**J**	**K**	**L**	**M**
None	**1**	0.73												
12 in. horizontal	**2**		0.72	0.71	0.71	0.71								
24 in. horizontal	**3**		0.70	0.70	0.70	0.69								
36 in. horizontal	**4**		0.68	0.67	0.66	0.66								
48 in. horizontal	**5**		0.67	0.65	0.64	0.63								
12 in. vertical	**6**		0.61	0.60	0.58	0.57	0.567	0.565	0.564					
24 in. vertical	**7**		0.58	0.56	0.54	0.52	0.510	0.505	0.502					
36 in. vertical	**8**		0.56	0.53	0.51	0.48	0.472	0.464	0.460					
48 in. vertical	**9**		0.54	0.51	0.48	0.45	0.434	0.424	0.419					
Fully insulated slab	**10**		0.46	0.41	0.36	0.30	0.261	0.233	0.213	0.198	0.186	0.176	0.168	0.161
Note: These values are used for slab edge conditions with and without carpet.														

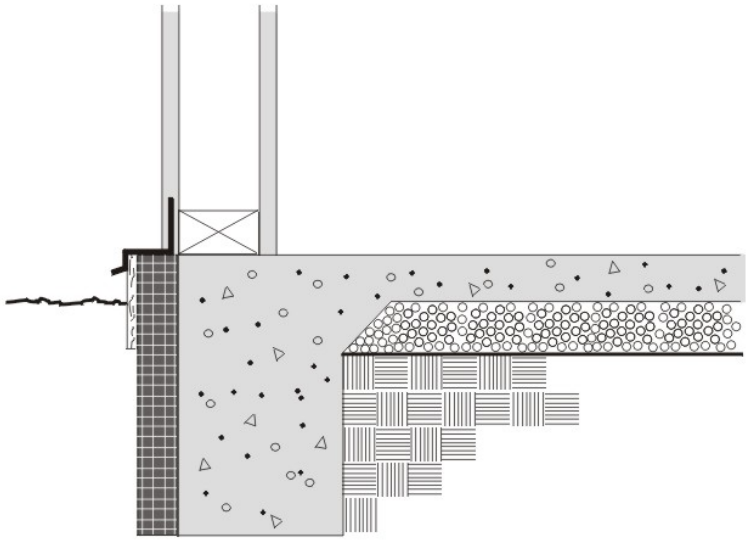

Figure 4.4.7 – Unheated Slab-on-Grade Floor

Horizontal insulation is continuous insulation that is applied directly to the underside of the slab and extends inward horizontally from the perimeter for the distance specified or continuous insulation that is applied downward from the top of the slab and then extends horizontally to the interior or the exterior from the perimeter for the distance specified. *Vertical insulation* is continuous insulation that is applied directly to the slab exterior, extending downward from the top of the slab for the distance specified. *Fully insulated slab* is continuous insulation that extends downward from the top to the slab and along the entire perimeter and completely covers the entire area under the slab.

Assumptions: Data of this table is taken from the ASHRAE/IESNA Standard 90.1-2004, Appendix A.

Table 4.4.8 – F-Factors for Heated Slab-on-Grade Floors

		Rated R-Value of Insulation												
		R-0	R-5	R-7.5	R-10	R-15	R-20	R-25	R-30	R-35	R-40	R-45	R-50	R-55
		A	B	C	D	E	F	G	H	I	J	K	L	M
None	**11**	1.35												
12 in. horizontal	**12**		1.31	1.31	1.30	1.30								
24 in. horizontal	**13**		1.28	1.27	1.26	1.25								
36 in. horizontal	**14**		1.24	1.21	1.20	1.18								
48 in. horizontal	**15**		1.20	1.17	1.13	1.11								
12 in. vertical	**16**		1.06	1.02	1.00	0.98	0.968	0.964	0.961					
24 in. vertical	**17**		0.99	0.95	0.90	0.86	0.843	0.832	0.827					
36 in. vertical	**18**		0.95	0.89	0.84	0.79	0.762	0.747	0.740					
48 in. vertical	**19**		0.91	0.85	0.78	0.72	0.688	0.671	0.659					
Fully insulated slab	**20**		0.74	0.64	0.55	0.44	0.373	0.326	0.296	0.273	0.255	0.239	0.227	0.217
Note: These values are used for slab edge conditions with and without carpet.														

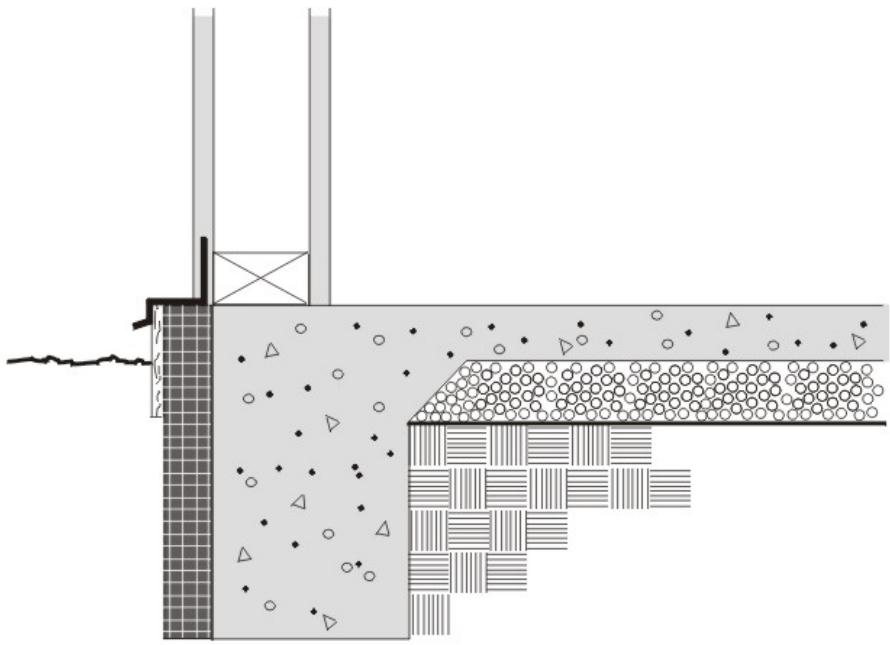

Figure 4.4.8 – Heated Slab-on-Grade Floor

Horizontal insulation is continuous insulation that is applied directly to the underside of the slab and extends inward horizontally from the perimeter for the distance specified or continuous insulation that is applied downward from the top of the slab and then extending horizontally to the interior or the exterior from the perimeter for the distance specified. *Vertical insulation* is continuous insulation that is applied directly to the slab exterior, extending downward from the top of the slab for the distance specified. *Fully insulated slab* is continuous insulation that extends downward from the top to the slab and along the entire perimeter and completely covers the entire area under the slab.

Assumptions: Data of this table is taken from the ASHRAE/IESNA Standard 90.1-2004, Appendix A.

JA4.5 Miscellaneous Construction

Table 4.5.1 – Doors

Description		U-factor (Btu/ºF-ft²)
		A
Uninsulated single-layer metal *swinging doors* or *non-swinging doors*, including single-layer uninsulated access hatches and uninsulated smoke vents:	**1**	1.45
Uninsulated double-layer metal *swinging doors* or *non-swinging doors*, including double-layer uninsulated access hatches and uninsulated smoke vents:	**2**	0.70
Insulated metal *swinging doors*, including fire-rated *doors*, insulated access hatches, and insulated smoke vents:	**3**	0.50
Wood *doors*, minimum nominal thickness of 1-3/4 in. (44 mm), including panel *doors* with minimum panel thickness of 1-1/8 in. (28 mm), and solid core flush *doors*, and hollow core flush *doors*:	**4**	0.50
Any other wood *door*:	**5**	0.60
Uninsulated single layer metal *roll up doors* including fire rated *door*	**6**	1.45
Insulated single layer metal *sectional doors,* minimum insulation nominal thickness of 1-3/8 inch; expanded polystyrene (R-4 per inch).	**7**	0.179
Source: ASHRAE 90.1-2007, Section A7.		

JA4.6

Table 4.6.1 – Physical Properties of Materials

Code	Description	R-value	Thickness	Conductivity	Density	Specific Heat
AR02	Asphalt Shingle & Siding	0.44			70.0	0.35
BP01	Building Paper, Permeable Felt	0.06				
PW03	Plywood 1/2 in.	0.63	0.0417	0.0667	34.0	0.29
GP01	Gypsum Board 1/2 in.	0.45	0.0417	0.0926	50.0	0.26
BR01	Built-up Roofing 3/8 in.	0.33	0.0313	0.0939	70.0	0.35
PW05	Plywood 3/4 in.	0.94	0.0625	0.0667	34.0	0.29
PW04	Plywood 5/8 in.	0.78	0.0521	0.0667	34.0	0.29
CP01	Carpet with Fibrous Pad	2.08				0.34
PB01	Particle Board Low Density 3/4 in.	1.39	0.0625	0.0450	75.0	0.31
SC01	Stucco 1 in.	0.20	0.0833	0.4167	116.0	0.20
WD05	Wood, Soft 4 in.	5.00	0.3333	0.0667	32.0	0.33
WD11	Wood, Hard 3/4 in.	0.68	0.0625	0.0916	45.0	0.30
-CC03	Heavy Wt. Dried Aggregate 4 in.	0.44	0.3333	0.7576	140.0	0.20
CC14	Heavy Wt. Undried Aggregate 4 in.	0.32	0.3333	1.0417	140.0	0.20
AC02	1/2 in. Acoustic Tile	1.26	0.0417	0.0330	18.0	0.32
AL33	Air Layer 4 in. or more, Horizontal Roof	0.92	1.0000	0.4167	120.0	0.20
CP01	Carpet with Fibrous Pad	2.08				0.34
Custom	Concrete	0.11			144.0	0.20
Custom	Light Weight CMU	0.35			105.0	0.20
Custom	Medium Weight CMU	0.35			115.0	0.20
Custom	Normal Weight CMU	0.35			125.0	0.20
Custom	Earth (Soil)	3.00	1.5000	0.5000	85.0	0.20
Custom	Logs 6 in.	7.50	0.5000	0.0667	32.0	0.33
Custom	Logs 8 in.	10.00	0.6667	0.0667	32.0	0.33
Custom	Logs 10 in.	12.49	0.8333	0.0667	32.0	0.33
Custom	Logs 12 in.	14.99	1.0000	0.0667	32.0	0.33
Custom	Logs 14 in.	17.49	1.1667	0.0667	32.0	0.33
Custom	Logs 16 in.	19.99	1.3333	0.0667	32.0	0.33
Custom	Earth 12 in.	2.00	1.0000	0.5000	85.0	0.20
Custom	Vented crawlspace	6.00	NA	NA	NA	NA
Custom	7/8" layer of stucco of R-0.18	0.18	0.0729	0.4167	116.0	0.20
Custom	Straw bale	30.00				
Custom	Acoustic tile + Metal	0.50	0.0417	0.0330	18.0	0.32
Custom	OSB 7/16 in.	0.44	0.4375	0.0667	34.0	0.29

Table 4.6.2 – Rules for Calculating Mass Thermal Properties From Published Values

Property	Units	Rule for Calculation
Heat Capacity (HC)	Btu/ºF-ft²	From Table 4.3.5, Table 4.3.6, or Table 4.3.7
U-factor	Btu/h-ºF-ft²	From Table 4.3.5, Table 4.3.6, or Table 4.14
C-factor	Btu/h-ºF-ft²	From Table 4.3.5, Table 4.3.6, or Table 4.3.7
Thickness (T)	Ft	From Table 4.3.5, Table 4.3.6, or Table 4.3.7
Specific Heat (SH)	Btu/ºF-lb	Assume that the specific heat of all concrete and masonry materials is 0.20 Btu/ºF-lb and that the specific heat of wood or straw (see Table 4.3.11 and Table 4.3.12) is 0.39 Btu/ºF-lb.
Weight (W)	lb/ft²	Divide the HC by the assumed specific heat. Wall weight is used with the low-rise residential standards to define a high mass wall.
Density (D)	lb/ft³	Multiply the weight (as calculated above) by the thickness (T)
Conductivity (C)	Btu/h-ºF-ft	Divide the published C-factor by the thickness (T). When only a U-factor is published, calculate the C-factor by assuming an exterior air film of 0.17 and an interior air film of 0.68.

ADDENDUM TO JA4 (See Notification : http://www.energy.ca.gov/title24/~~2013~~2016standards/)

Table 4.3.1(a) – U-factors of Wood Framed Walls with 5/8 gypsum[1] (Only to be used when 5/8 inch gypsum is installed)

	Cavity Insulation	Nominal Framing Size		Rated R-value of Continuous Insulation [3]						
				R-0	R-2	R-4	R-5	R-6	R-7	R-8
Spacing				A	B	C	D	E	F	G
16 in. OC	None	Any	1	0.343	0.208	0.145	0.126	0.112	0.100	0.091
	R-11	2x4	2	0.109	0.087	0.073	0.067	0.063	0.059	0.055
	R-13	2x4	3	0.101	0.081	0.068	0.063	0.059	0.056	0.052
	R-15 [2]	2x4	4	0.094	0.076	0.064	0.059	0.055	0.052	0.049
	R-19	2x6	5	0.073	0.062	0.054	0.050	0.048	0.045	0.043
	R-21[2]	2x6	6	0.068	0.058	0.050	0.047	0.045	0.041	0.040
	R-22	2x6	7	0.071	0.061	0.053	0.050	0.047	0.044	0.042
	R-19	2x8	8	0.064	0.056	0.050	0.047	0.044	0.042	0.040
	R-22	2x8	9	0.060	0.052	0.046	0.044	0.042	0.040	0.038
	R-25	2x8	10	0.056	0.049	0.043	0.041	0.039	0.037	0.036
	R-30[2]	2x8	11	0.055	0.048	0.043	0.040	0.039	0.037	0.035
24 in. OC	None	Any	12	0.361	0.210	0.147	0.127	0.113	0.101	0.091
	R-11	2x4	13	0.105	0.085	0.071	0.066	0.061	0.058	0.055
	R-13	2x4	14	0.097	0.078	0.066	0.061	0.057	0.054	0.052
	R-15	2x4	22	0.090	0.073	0.062	0.058	0.054	0.051	0.049
	R-19	2x6	15	0.070	0.060	0.052	0.049	0.047	0.044	0.043
	R-21[2]	2x6	16	0.065	0.056	0.049	0.046	0.044	0.041	0.040
	R-22	2x6	17	0.068	0.059	0.051	0.048	0.046	0.043	0.042
	R-19	2x8	18	0.062	0.054	0.048	0.046	0.044	0.042	0.041
	R-22	2x8	19	0.057	0.050	0.045	0.043	0.041	0.039	0.038
	R-25	2x8	20	0.054	0.047	0.042	0.040	0.038	0.036	0.036
	R-30[1]	2x8	21	0.053	0.046	0.041	0.039	0.037	0.036	0.035

Notes

1. The 5/8 inch gypsum board must be verified by the enforcement agency. If 5/8 inch gypsum board is not installed use table 4.3.1.
2. Higher density fiberglass batt is required in these cases.
3. Continuous insulation may be installed on either the inside or the exterior of the wall, or both.

This table contains U-factors for wood framed walls, which are typical of low-rise residential buildings and Type V nonresidential buildings. If continuous insulation is not used, then choices are made from Column A. In this case, the insulation is installed in the cavity between the framing members. When continuous insulation is used, this is typically installed on the exterior side of the wall, but can also be used on the inside. The continuous insulation is typically a rigid polystyrene or polyisocyanurate foam insulation.

When this table is used manually, the R-value of continuous insulation shall be equal to or greater than the R-value published in the continuous insulation columns. No interpolation is permitted when data from the table is used manually. Commission approved compliance software, however, may determine the U-factor for any amount of continuous insulation or for unusual construction assemblies using Equation 4-1 and Equation 4-2.

Joint Appendix JA5

Appendix JA5 - Technical Specifications For Occupant Controlled Smart Thermostats

Table of Contents

Appendix JA5 - Technical Specifications For Occupant Controlled Smart Thermostats 1
JA5.1 Introduction 2
JA5.2 Required Functional Resources 3
JA5.2.1 Setback Capabilities. 3
JA5.2.2 Communication Capabilities. 3
JA5.2.3 OCST Messages and Attributes 3
JA5.2.3.1 Demand Responsive Control
JA5.2.3.2 Demand Response Periods
JA5.2.4 Event Response 3
JA5.2.5 Other Required Capabilities 4
JA5.3 Functional Descriptions 5
JA5.3.1 Communications Interface 5
JA5.3.2 Expansion~~/Communication~~ Port 5
JA5.3.3 Onboard Communications Devices 6
JA5.3.4 User Display and Interface 6
JA5.3.5 Required Functional Behavior 6
JA5.3.6 Restoring Temperature Offsets and Setpoints 8
JA5.3.7 Security 8
JA5.4 The HVAC System Interface 8
JA5.5 Terminology 8

JA5.1 Introduction

The Occupant Controlled Smart Thermostat (OCST)[21] shall be self-certified by the manufacturer to the Energy Commission to meet the requirements described in this section. This document provides a high level technical specification for an OCST. All OCSTs shall comply with the specifications set forth in this document or a specification approved by the Executive Director. This specification focuses on three interfaces that the Energy Commission has determined shall be supported by all OCSTs:

(a) Communications Interface
(b) User Display and Interface
(c) HVAC System Interface

Sections within this document address each interface in terms of its hardware and software characteristics. This specification is intended to compatible with National Electrical Manufacturers Association (NEMA) Standards Publication DC 3-~~2008~~ 2013 – "Residential Controls – Electrical Wall-Mounted Thermostats"[~~3~~2] unless otherwise specified.

The Communications Interface is comprised of the (1) physical communication interface and the (2) logical communication interface.

(a) The physical communication interface describes the physical connection that enables receipt of demand response signals or price signals.

(b) The logical communication interface describes the information model and its messaging protocol used for representation and interpretation of signals received by the OCST.

See Section 5.3.1 for a more detailed explanation of these communication interfaces.~~defined as a set of logical services that may be performed over a physical network interface connected to either an expansion port or an internal communications device. The communications interface is designed to permit a variety of intended uses for OCSTs including remote energy management services, to the extent that occupants voluntarily enable such services. To the extent possible, this document strives to be compatible with related efforts underway (e.g. National Institute of Standards and Technology (NIST) Smart Grid Interoperability Panel (SGIP), Open Smart Grid, etc.).~~

~~The following elements are addressed in this document:~~

~~(a) Support for the basic HVAC terminal interface specification~~
~~(b) Support for an internal communications device or for an expansion port that will allow for the installation of a removable module to enable communications with the thermostat.~~

~~The following sections describe these and other elements of the specification in more detail.~~

[1~~2~~] A networked system of devices which is capable of receiving and responding to demand response signals and provides equivalent functionality as required by Reference Joint Appendix JA5, shall be considered equivalent to an OCST.

[2~~3~~] NEMA DC 3-20~~08~~13 – http://www.nema.org/news/Pages/NEMA-Publishes-Thermostat-Standards-NEMA-DC-3-2013-and-NEMA-DC-3-Annex-A-2013.aspx

JA5.2 Required Functional Resources

JA5.2.1 Setback Capabilities

All OCSTs shall meet the requirements of Section 110.2(c). Thermostats for heat pumps shall also meet the requirements of Section 110.2(b).

JA5.2.2 Communication Capabilities

OCSTs shall include communication capabilities compliant with Section 5.3.1 and be enabled through either

(a) At least one expansion port ~~which will allow for the installation of~~with a removable module ~~containing a radio or physical connection port~~ to enable communication; or
(b) Onboard communication device(s)

See Sections 5.3.2 and 5.3.3 for a more detailed description of expansion port and onboard communication device.

JA5.2.3 OCST Messages and Attributes

The OCST communications capabilities shall enable Demand Responsive Control through receipt of Demand Response Signals or price signals. After OCST communication is enabled and the occupant has enrolled in a Demand Response program or subscribed to receive demand response or pricing related messages or information updates, the OCST shall be capable of both receiving and responding to Demand Response Signals. The OCST with communications enabled recognizes two basic system event modes: price response and Demand Response Periods. Both basic system event modes can be overridden by the occupant.

JA5.2.3.1 Demand Responsive Control~~Price Signals~~

The OCST shall be capable of demand responsive control for the demand response period upon receipt of a demand response signal, which is a signal sent by the local utility, California Independent System Operator (California ISO), or designated curtailment service provider or aggregator, to a customer, indicating a price or a request to modify electricity consumption, for a limited time period. A price signal is a type of demand response signal.

Price signals allow the utility or another entity selected by the occupant to send a signal or message to the occupant's OCST to provide pricing information to the occupant and initiate Demand Responsive Control for the Demand Response Period utilizing a Demand Response Signal.

Price signal attributes and requirements shall be specified within the messaging protocol utilized by the utility or other entity selected by the occupant.

JA5.2.3.2 Demand Response Periods

This event class allows the utility or another entity selected by the occupant to initiate Demand Responsive Control for the Demand Response Period utilizing a Demand Response Signal.

Demand Response Signal attributes and requirements shall be specified within the messaging protocol utilized by the utility or other entity selected by the occupant.

If a price signal or Demand Response Signal is received and validated, but conflicts with a prior message, the newer message shall supersede the previous message and any continuing action for the prior message is automatically terminated by the OCST (unless the subsequent message attempts to initiate an action that has been disapproved by the occupant).

JA5.2.4 Event Response

Event response, unless overridden by the occupant or modified by an energy management control system or service, may be triggered by price signals or Demand Response Signals. The OCST shall provide one

set of event responses for price signals and one set of event responses for Demand Response Signals. The responses may be common for both types of events.

OCSTs~~, with communications enabled,~~ shall be capable of receiving and automatically responding to the Demand Response Signals as follows:

(a) A Demand Response Signal shall trigger the OCST to adjust the thermostat setpoint by either the default number of degrees or the number of degrees established by the occupant.
(b) When a price signal indicates a price in excess of a price threshold established by the occupant, the OCST shall adjust the thermostat setpoint by either the default number of degrees or the number of degrees established by the occupant.
(c) In response to price signals or Demand Response signals, the OCST shall default to an event response that initiates setpoint offsets of +4°F for cooling and -4°F for heating relative to the current setpoint.
(d) The OCST shall have the capability to allow occupants or their representative to modify the default event response with occupant defined event responses for cooling and heating relative to the current setpoint in response to price signals or Demand Response Signals.
(e) Override Function: Occupants shall be able to change the event responses and thermostat settings or setpoints at any time, including during price events or Demand Response Periods.
(f) The Demand Response Signal shall start the Demand Response Period either immediately or at a specific start time as specified in the event signal and continue for the Demand Response Period specified in the Demand Response Signal or until the occupant overrides the event setpoint.
(g) The thermostat's price response shall start either immediately or at a specific start time as specified in the pricing signal and continue for the duration specified in the pricing signal or until the occupant overrides the event setpoint.
(h) The OCST shall have the capability to allow occupants to define setpoints for cooling and heating in response to price signals or Demand Response signals as an alternative to the default event response.
(i) At the end of a price event or Demand Response Period, the thermostat setpoint shall be set to the setpoint that is programmed for the point in time that the event ends or to the manually established setpoint that existed just prior to the Demand Response Period.

JA5.2.5 Other Required Capabilities

~~Unless the messaging protocol contains randomization or restoration delay logic, OCSTs shall provide a mechanism, such as a randomized delay, to prevent all of the OCSTs within a demand-response area from ending the demand-response event at the same time. This mechanism can be implemented within the control logic of the OCST, within the control logic of the demand-response signaling system, or within the control logic of the communication network between the OCST and the demand-response signaling system. The display of the thermostat shall accurately indicate the end of the event, accounting for any delays or advances provided by this mechanism. The specific maximum restoration delay for restoration after a Demand Response Period shall be 30 minutes or alternatively can be defined within the Demand Response Signal for that event.~~

(a) Default Restart Settings: In the event of a disruption of power to the device that results in power off or restart, upon device restart, the device shall automatically restore the most recently programmed settings, including reconnection to a network, if the device was previously enabled and network connectivity is available.
(b) Automatic Rejoin: OCSTs are expected to connect, and remain connected in its communication path and control end point. The OCST shall incorporate an automatic rejoin function. When physical and/or logical communication is lost, the OCST shall trigger its automatic rejoin function to restore the physical and/or logical communication..

JA5.3 Functional Descriptions

JA5.3.1 Communications Interface

The communications interface has two aspects – the physical interface and the logical interface.

The physical communications interface describes the physical connection through which event signals are received, and shall meet the following requirements:

1. The OCST shall be capable of connecting to a Wi-Fi network compliant with Institute of Electrical and Electronics Engineers (IEEE) Standard 802.11, and/or Zigbee network compliant with IEEE 802.15.4. Manufacturers may choose to include additional wireless or wired physical communication interfaces.

~~1.~~2. The physical communication interface shall be capable of bi-directional exchange of information over its communication path.

The logical communication interface within the OCST hardware, which describes the messaging protocol and information model used in representation and interpretation of demand response signals, shall comply at a minimum, with any individual or combination of the following open-based standards: OpenADR 2.0[3] or Smart Energy Profile (SEP) 1.1[4] which are listed the Smart Grid Interoperability Panel (SGIP) Catalog of Standards (CoS)[5]. Manufacturers may choose to provide additional logical communication protocols, Builders, HVAC installer, architects, and all other Title 24 professionals should check with the local utility where the property is located) on guidance when choosing the DR signal standard for the OCST.

Using receipt of a demand response signal via the physical communication interface, and interpretation of the signal via the logical communication interface, the OCST shall be capable of automatically initiating demand responsive control.

~~The physical communications interface includes a one- or two-way communications interface as selected and specified by the occupant's utility, information update service or Demand Response service provider and enabled by either onboard communications devices or a communications module in the case of an expansion/communication port. There is no mandated specification for the physical communications protocol. However, the communications capabilities shall enable Demand Responsive Control through receipt of Demand Response Signals based on communications standards (including but not limited to ZigBee (IEEE 802.15.4) or WiFi (IEEE 802.11)).~~

~~The logical interface consists of the information model used to represent messages sent to the OCST. There is no mandated specification for the logical interface , but direction is provided as "s~~Standards based ~~messaging protocols (including but not limited to Smart Energy Profile (SEP), OpenADR or others defined in the Smart Grid Interoperability Panel (SGIP) Catalog of Standards (CoS)[4])" or as defined by the occupant's information update service or Demand Response service provider~~ are acceptable~~.~~

JA5.3.2 Expansion/Communication Port

The expansion port allows for the installation of a removable module to enable physical and logical communication as described in Section 5.3.1.~~This port is available to be used by a module supporting one-way or two-way communications supporting standards based communication protocols as described in Section 5.3.1. The module shall also enable standards based messaging protocols (including but not limited to Smart Energy Profile (SEP), OpenADR or others defined in the Smart Grid Interoperability Panel (SGIP) Catalog of Standards (CoS)) or as defined by the occupant's information update service or Demand Response service provider.~~

[3] http:/www.openadr.org/

[4] http://zigbee.org/Standards/ZigBeeSmartEnergy/Overview.aspx

[5] http://collaborate.nist.gov/twiki-sggrid/bin/view/SmartGrid/SGIPCoSStandardsInformationLibrary

~~4 http://collaborate.nist.gov/twiki-sggrid/bin/view/SmartGrid/SGIPCoSStandardsInformationLibrary~~

When the Expansion~~/Communication~~ port is unpopulated, the thermostat shall function as a programmable setback thermostat and shall meet the requirements of Sections 110.2(b) and (c).

The removable module may also provide a means of memory storage, logging, and firmware upgrade. The requirements associated with the expansion ~~interface~~ port are:

(a) The expansion~~/communication~~ port shall be readily accessible to the occupant for installing and removing the communication module.

(b) Installation of the module shall upgrade the programmable setback thermostat to an OCST.

(c) After communications are enabled[5] and the occupant has enrolled in a Demand Response program or subscribed to receive demand response related messages or information updates, the OCST shall be capable of both receiving and responding to Demand Response Signals.

The ~~OCST's~~ expansion port ~~interface~~ has no mandated configuration or design specification.

JA5.3.3 Onboard Communications Devices

When onboard communication devices are present, the thermostat or HVAC control system shall be equipped with the capability to enable or disable the onboard communication device(s). The switch or interface to enable or disable onboard communications shall be readily accessible to the occupant.

When onboard communications are disabled, the thermostat shall function as a programmable setback thermostat and shall meet the requirements of Section 110.2(c). Thermostats for heat pumps shall also meet the requirements of Section 110.2(b).

JA5.3.4 User Display and Interface

The OCST shall have the capability to display information to the user. The following information shall be readily available whenever the OCST display is active:

(a) communications system connection status,

(b) an indication that a Demand Response Period or pricing event is in progress,

(c) other maintenance-related information,

(d) the currently sensed temperature,

(e) the current setpoint.

JA5.3.5 Required Functional Behavior

(a) Clock Operation. The clock mechanism enables the OCST to execute temperature setpoints scheduled by the occupant. It also supports other timing functions such as start-time, end-time and duration for coordination of Demand Response Periods and price signal response.

The OCST shall provide a pair of programmable thermostat setpoint time and temperature parameters for at least four operating periods that collectively govern thermostat operation during the 24-hour day.

Accuracy to a precision of one minute is acceptable for this operating environment and the applications being considered.

The clock in an OCST may be set by the occupant, using the OCST's human-machine interface. Alternatively, an OCST with communications enabled may be set or synchronized by the occupant's selected service provider.

5 The removable module, or gateway for a networked system of devices, for enabling communications can be selected and installed at the time of enrollment in a Demand Response program or subscription to receive demand response related messages or information updates.

(b) Normal Operation. Normal operation of an OCST is defined to be the OCST's prevailing mode of operation as determined by the occupant's prior settings and use of features[6] provided by the OCST manufacturer's design. Aspects of normal operation of an OCST may be modified or interrupted in response to occupant subscribed price signals or when Demand Response Periods are in progress, but only to the extent specified by occupants or their representatives.

Unless an occupant has elected to connect the OCST to an energy management control system or service that provides for alternate strategies, the OCST shall provide a mode of operation whereby it controls temperature by following the scheduled temperature setpoints.

Occupants shall always have the ability to change OCST settings or use other features of an OCST during an event. Those changes may alter what is considered to be the prevailing mode of operation when a Demand Response Period is terminated and the OCST returns to normal operation.

(c) Demand Responsive Control. Upon receiving a price signal or a Demand Response Signal, OCSTs shall be capable of automatic event response by adjusting the currently applicable temperature setpoint by the number of degrees indicated in the temperature offset (heating or cooling, as appropriate).

Override: OCSTs shall allow an occupant or their representative to alter or eliminate the default response to price signals or Demand Response Signals, and to override any individual price response or Demand Responsive Control and allow the occupant to choose any temperature setpoint at any time including during a price event or a Demand Response Period.

When the price signal changes to a non-response level or the Demand Response Period is concluded, OCSTs shall return to normal operation. The thermostat setpoint shall be set to the setpoint that is programmed for the point in time that the event ends or to the manually established setpoint that existed just prior to the Demand Response Period.

The OCST shall also be equipped with the capability to allow occupants to define setpoints for cooling and heating in response to price signals or Demand Response Signals as an alternative to the default event response. The default setpoint definitions unless redefined by the occupant shall be as follows:

1. The default price response or Demand Response Period setpoint in the cooling mode for OCSTs shall be 82°F. The OCST shall allow the occupant to change the default event setpoint to any other value.
2. The default price response or Demand Response Period setpoint in the heating mode for OCSTs shall be 60°F. The OCST shall allow the occupant to change the default event setpoint to any other value.
3. The OCST shall ignore price response or Demand Response Period setpoints that are lower (in cooling mode) or higher (in heating mode) than the programmed or occupant selected prevailing setpoint temperature upon initiation of the price event or Demand Response Period.
4. By default, thermostats shall not be remotely set above 90°F or below 50°F. Occupants shall have the ability to redefine these limits. This measure protects occupant premises from extreme temperatures that might otherwise be imposed by event responses, should the occupant already have a very high or low temperature setpoint in effect.

The occupant may still override or change the setpoint during all price events and Demand Response Periods. Price signal response and Demand Responsive Control only modify the operating range of the thermostat. They do not otherwise affect the operation and use of features provided by the manufacturer's design.

6 The specific design of such features (e.g. HOLD, OVERRIDE) is defined by individual manufacturers and not by this document.

JA5.3.6 Restoring Factory Installed Default Settings

The OCST shall include the capability to allow the occupant to restore the factory installed default settings.

JA5.3.7 Security

Demand Response Signal security attributes and requirements shall be specified within both the communications standard and the messaging protocol utilized by the utility or other entity selected by the occupant. The OCST communications system shall consider relevant security issues and potential cyber-attacks[7].

JA5.4 The HVAC System Interface

HVAC wiring terminal designations shall be clearly labeled. OCSTs shall use labels that comply with Table 5-1 in NEMA DC 3-2008. It is noted that OCSTs using wired or wireless digital data interfaces do not directly follow NEMA DC 3-2008.

JA5.5 Terminology

Current Setpoint	The setpoint that existed just prior to the price event or Demand Response Period.
Demand Response	See Joint Appendix JA1- Glossary.
Demand Response Period	See Joint Appendix JA1 – Glossary.
Demand Response Signal	See Joint Appendix JA1 – Glossary.
Demand Responsive Control	See Joint Appendix JA1 – Glossary.
Energy Management Control System	See Joint Appendix JA1 – Glossary.
Override	Refers to an occupant adjusting thermostat settings to either not respond to a Demand Response Signal or adjusting the setpoint compared to the OCST's programmed response to a price signal or Demand Response Signal.
~~**Price Signal**~~	~~is a signal sent by the local utility, Independent System Operator (ISO), or designated curtailment service provider, information update service or aggregator, to an enrolled or subscribed customer, indicating a price or other economic indicator that can trigger OCST Demand Responsive Control.~~
Price Event	Refers to a change in pricing sent to the OCST from the utility or the

7 A thorough discussion of security issues may be found at: http://collaborate.nist.gov/twiki-sggrid/bin/view/SmartGrid/CyberSecurityCTG.

occupant's selected demand response provider.

(This page left intentionally blank.)

Joint Appendix JA6

Appendix JA6 – HVAC System Fault Detection and Diagnostic Technology

Table of Contents

Appendix JA6 – HVAC System Fault Detection and Diagnostic Technology 1
JA6.1 ~~Charge~~ Fault Indicator Display (~~CID~~FID) 2
JA6.1.1 Purpose and Scope 2
JA6.1.2 ~~CID~~FID Product Approval 2
JA6.1.3 ~~CID~~FID Installation 2
JA6.1.4 ~~CID~~FID Product Documentation 2
JA6.1.5 Optional Fault Detection Capabilities 2
JA6.1.6 Requirements for a Charge Indicator Display 3
JA6.2 Saturation Pressure Measurement Sensors 7
JA6.2.1 Purpose and Scope 7
JA6.2.2 SPMS Device Approval 7
JA6.2.3 Standard for Saturation Pressure Measurement Sensors 7
JA6.3 Economizer Fault Detection and Diagnostic Certification Submittal Requirements
JA6.3.1 Information that shall be included with the Declaration
JA6.3.2 Fault Detection Test Specifications
JA6.3.3 Reporting of Test Results
JA6.3.4 Declaration
JA6.3.5 Certification

JA6.1 ~~Charge~~ Fault Indicator Display (~~CID~~FID)

JA6.1.1 Purpose and Scope

Joint Appendix JA6.1 defines required elements for ~~charge~~fault indicator display technologies that utilize instrumentation and computer software functionality to monitor and determine the operating performance of vapor compression air conditioning and heat pump systems, to provide visual indication to the system owner/operator if the system's refrigerant charge or metering device performance does not conform to approved target parameters for minimally efficient operation.

JA6.1.6 specifies the required instrumentation, instrumentation accuracy, parameters measured, required calculations, allowable deviations from target values for system operating parameters, and the requirements for system fault indication for a ~~charge~~fault indicator display technology that conforms to the methods for verifying refrigerant charge and metering device performance described in Reference Residential Appendix RA3.2.2.

~~Charge~~Fault indicator display technologies other than what is described in Section JA6.1are possible, and when vapor compression air conditioner and heat pump system refrigerant charge, metering device and airflow operating performance can be reliably determined by methods and instrumentation other than those specifically defined in section JA6.1 such alternative ~~charge~~fault indicator display technologies may be allowed for ~~Charge~~Fault Indicator Display compliance credit if the manufacturer of the product requests approval from the Energy Commission. The Commission may grant such approval after reviewing submittals from the applicant. ~~Charge~~Fault indicator display technologies that are approved by the Commission shall be specified in documentation that will be published as an addendum to this appendix.

The applicant shall provide information that specifies the required instrumentation, the instrumentation accuracy, the parameters measured, the required calculations, the allowable deviations from target values for system operating parameters, and the requirements for system fault indication.

JA6.1.2 ~~CID~~FID Product Approval

~~Charge~~Fault indicator display technology manufacturers shall certify to the Energy Commission that the ~~charge~~fault indicator display technology meets the requirements of Reference Joint Appendix JA6.1.

JA6.1.3 ~~CID~~FID Installation

~~Charge~~Fault indicator display devices shall be factory installed by the space-conditioning system manufacturer, or field installed according to the space-conditioning system manufacturer's requirements and the ~~CID~~FID manufacturer's specifications.

JA6.1.4 ~~CID~~FID Product Documentation

Manufacturers of ~~CID~~FID technologies shall, upon request, provide comprehensive engineering specification documentation, installation and technical field service documentation, and homeowner user instructions documentation to designers, installers, service personnel and homeowners who utilize the technology.

JA6.1.5 Optional Fault Detection Capabilities

The ~~CID~~FID may also be used to signal other system operation faults as long as these additional functions do not detract from the proper function of the refrigerant charge, metering device, or airflow operation indications.

JA6.1.6 Requirements for a ~~Charge~~Fault Indicator Display

This section specifies the required instrumentation, the instrumentation accuracy, the parameters measured, the required calculations, the allowable deviations from target values for system operating parameters, and the requirements for system fault indication for a ~~charge~~fault indicator display technology.

JA6.1.6.1 Instrumentation Specifications

Instrumentation for the procedures described in JA6.1.6 shall conform to the following specifications:

JA6.1.6.1.1 Temperature Sensors

The temperature sensors shall have an accuracy of plus or minus1.8°F.

JA6.1.6.1.2 Refrigerant Pressure Sensors

Refrigerant pressure sensors, shall have an accuracy of plus or minus 3 percent of full scale.

JA6.1.6.1.3 Parameters Measured

The following parameters shall be measured:

(a) Suction line temperature ($T_{suction,}$)

(b) Liquid line temperature (T_{liquid})

(c) Evaporator saturation temperature or low side refrigerant pressure ($T_{evaporator, sat}$)

(d) Condenser saturation temperature or high side refrigerant pressure ($T_{condensor, sat}$)

(e) Return air wet bulb temperature or humidity ($T_{return, wb}$)

(f) Return air dry bulb temperature ($T_{return, db}$)

(g) Condenser air entering dry bulb temperature ($T_{condenser, db}$)

(h) Supply air dry bulb temperature ($T_{supply, db}$)

JA6.1.6.2 Refrigerant Charge, Metering Device, and Airflow Calculations

Refrigerant charge, metering device and airflow calculations for determining superheat, subcooling, and temperature split values shall conform to the specifications of this section utilizing the measured parameters data from instrumentation as specified in Section JA6.1.6.1.

JA6.1.6.2.1 Fixed Metering Device Calculations

The fixed metering device calculations are used only for systems equipped with fixed metering devices. These include capillary tubes and piston-type metering devices.

(a) Calculate Actual Superheat as the suction line temperature minus the evaporator saturation temperature. Actual Superheat = $T_{suction,} – T_{evaporator, sat}$.

(b) Determine the Target Superheat using Reference Residential Appendix RA3 Table RA3.2-2, the return air wet-bulb temperature ($T_{return, wb}$) and the condenser air entering dry-bulb temperature ($T_{condenser, db}$). If a dash mark is read from Reference Residential Appendix RA3 Table RA3.2-2, the target superheat is less than 5°F.

(c) Calculate the difference between Actual Superheat and Target Superheat (Actual Superheat - Target Superheat)

JA6.1.6.2.2 Variable Metering Device Calculations

The variable metering device calculations are used only for systems equipped with variable metering devices. These include Thermostatic Expansion Valves (TXV) and Electronic Expansion Valves (EXV).

(a) Calculate Actual Subcooling as the condenser saturation temperature minus the liquid line temperature. Actual Subcooling = $T_{condenser, sat}$ - T_{liquid}.

(b) Determine the Target Subcooling specified by the manufacturer.

(c) Calculate the difference between actual subcooling and target subcooling (Actual Subcooling - Target Subcooling.

(d) Calculate Actual Superheat as the suction line temperature minus the evaporator saturation temperature. Actual Superheat = $T_{suction}$ – $T_{evaporator, sat}$.

(e) If possible, determine the Superheat Range specified by the manufacturer.

JA6.1.6.2.3 Minimum Airflow Calculations

The minimum airflow calculations are designed to determine whether the rate of airflow across the evaporator coil is above the minimum airflow rate requirement for a valid refrigerant charge test result.

(a) Calculate the Actual Temperature Split as the return air dry-bulb temperature minus the supply air dry-bulb temperature. Actual Temperature Split = $T_{return, db}$ - $T_{supply, db}$

(b) Determine the Target Temperature Split from Table JA6.1-1 using the return air wet-bulb temperature ($T_{return, wb}$) and return air dry-bulb temperature ($T_{return, db}$).

(c) Calculate the difference between target and actual temperature split (Actual Temperature Split - Target Temperature Split).

JA6.1.6.3 System Fault Indication

Data from instrumentation specified in Section JA6.1.6.1 and calculations specified in Section JA6.1.6.2 shall be processed and interpreted continuously or at sufficiently frequent time step intervals, during normal system operation, to insure that system operating conditions that meet the system fault criteria of this section will be detected, and indicated by the ~~charge~~fault indicator display. Data from instrumentation specified in Section JA6.1.6.1 and calculations specified in Section JA6.1.6.2 shall be processed and interpreted in a manner that prevents indication of system faults when system fault criteria are triggered by temporary or transitory operating conditions that are not true indicators of problems with refrigerant charge, metering device, or airflow performance.

The ~~charge~~fault indicator display shall:

(a) be clearly visible to occupants of the home during normal operation.

(b) be located on or within one foot of (one of) the thermostat(s) controlling the air conditioner.

(c) display an indication of a system fault requiring service or repair when system normal operation fails to meet the required operating performance criteria specified in this section. These system fault indications shall be displayed for a period of at least 7 days after a system fault is detected unless the ~~charge~~fault indicator display is reset by the installing or servicing technician.

1. Refrigerant charge verification criterion for fixed metering device systems.

   If the air conditioner has a fixed metering device, runs for 15 minutes, has a Target Superheat value determined by Reference Residential Appendix RA3 Table RA3.2-2 that is greater than or equal to 5°F, the condenser air entering temperature is greater than or equal to 65°F, and the minimum airflow requirement from item d below is satisfied, then the conditions for a valid refrigerant charge test are satisfied.

   If the conditions for a valid refrigerant charge test are satisfied, and the air conditioner has an Actual Superheat value that deviates more than plus or minus 10°F from the Target Superheat value determined by Reference Residential Appendix RA3 Table RA3.2-2, then the system fails the refrigerant charge test, and a system fault shall be reported.

2. Refrigerant charge verification criterion for variable metering device systems.

If the air conditioner has a TXV or EXV, runs for 15 minutes, the condenser air entering temperature is greater than or equal to 65°F, and the minimum airflow requirement from item d below is satisfied, then the conditions for a valid refrigerant charge test are satisfied.

If the conditions for a valid refrigerant charge test are satisfied, and the air conditioner has an Actual Subcooling value that deviates more than plus or minus 6°F from the Target Subcooling value listed by the manufacturer, then the system fails the refrigerant charge test, and a system fault shall be reported.

3. Variable metering device function verification criterion.

   If the air conditioner has a TXV or EXV, runs for 15 minutes, the condenser air entering temperature is greater than or equal to 65°F, and the minimum airflow requirement from item d below is satisfied, then the conditions for a valid metering device test are satisfied.

   If the conditions for a valid metering device test are satisfied, and the air conditioner has an Actual Superheat value outside the range specified by the manufacturer (or outside the range 2°F to 28°F if there is no manufacturer's specification), then the system fails the metering device test, and a system fault shall be reported.

4. Minimum airflow verification criterion.

   If the air conditioner runs for 15 minutes, and the condenser air entering temperature is greater than or equal to 65°F, then the conditions for a valid minimum airflow test are satisfied.

   If the conditions for a valid minimum airflow test are satisfied, and the air conditioner has an Actual Temperature Split value that deviates more than plus 5°F from the Target Temperature Split value determined by Table JA6.1-1, then the system fails the minimum airflow test, and a system fault shall be reported.

JA6.1.6.4 Optional Functionality

The ~~charge~~fault indicator display devices may be set to tighter specifications than those specified in Section JA6.1.6.3. The ~~charge~~fault indicator display may also be used to signal other system faults as long as these additional diagnostic functions do not detract from the accuracy of the measurement and reporting of system faults as specified in Section JA6.1.6.3.

JA6.1.6.4.1 Self Diagnostic Reporting

When equipped with self diagnostic reporting functionality, the ~~CID~~FID shall check for communication with every sensor and provide an indication when there are any sensor failures.

JA6.1.6.4.2 Data Access

In order to provide for verification of sensor data and ~~CID~~FID system functionality, data access shall be provided. The ~~CID~~FID manufacturer shall specify the data access method(s), and the minimum data reporting capability including requirements for any data history reporting.

Table JA6.1-1 Target Temperature Split (Return Dry-Bulb – Supply Dry-Bulb)

Return Air Dry–Bulb (ºF) (T return, db)	Return Air Wet-Bulb (ºF) (T return, wb)																										
	50	51	52	53	54	55	56	57	58	59	60	61	62	63	64	65	66	67	68	69	70	71	72	73	74	75	76
70	20.9	20.7	20.6	20.4	20.1	19.9	19.5	19.1	18.7	18.2	17.7	17.2	16.5	15.9	15.2	14.4	13.7	12.8									
71	21.4	21.3	21.1	20.9	20.7	20.4	20.1	19.7	19.3	18.8	18.3	17.7	17.1	16.4	15.7	15.0	14.2	13.4	12.5								
72	21.9	21.8	21.7	21.5	21.2	20.9	20.6	20.2	19.8	19.3	18.8	18.2	17.6	17.0	16.3	15.5	14.7	13.9	13.0	12.1							
73	22.5	22.4	22.2	22.0	21.8	21.5	21.2	20.8	20.3	19.9	19.4	18.8	18.2	17.5	16.8	16.1	15.3	14.4	13.6	12.6	11.7						
74	23.0	22.9	22.8	22.6	22.3	22.0	21.7	21.3	20.9	20.4	19.9	19.3	18.7	18.1	17.4	16.6	15.8	15.0	14.1	13.2	12.2	11.2					
75	23.6	23.5	23.3	23.1	22.9	22.6	22.2	21.9	21.4	21.0	20.4	19.9	19.3	18.6	17.9	17.2	16.4	15.5	14.7	13.7	12.7	11.7	10.7				
76	24.1	24.0	23.9	23.7	23.4	23.1	22.8	22.4	22.0	21.5	21.0	20.4	19.8	19.2	18.5	17.7	16.9	16.1	15.2	14.3	13.3	12.3	11.2	10.1			
77	-	24.6	24.4	24.2	24.0	23.7	23.3	22.9	22.5	22.0	21.5	21.0	20.4	19.7	19.0	18.3	17.5	16.6	15.7	14.8	13.8	12.8	11.7	10.6	9.5		
78	-	-	-	24.7	24.5	24.2	23.9	23.5	23.1	22.6	22.1	21.5	20.9	20.2	19.5	18.8	18.0	17.2	16.3	15.4	14.4	13.4	12.3	11.2	10.0	8.8	
79	-	-	-	-	-	24.8	24.4	24.0	23.6	23.1	22.6	22.1	21.4	20.8	20.1	19.3	18.5	17.7	16.8	15.9	14.9	13.9	12.8	11.7	10.6	9.4	8.1
80	-	-	-	-	-	-	25.0	24.6	24.2	23.7	23.2	22.6	22.0	21.3	20.6	19.9	19.1	18.3	17.4	16.4	15.5	14.4	13.4	12.3	11.1	9.9	8.7
81	-	-	-	-	-	-	-	25.1	24.7	24.2	23.7	23.1	22.5	21.9	21.2	20.4	19.6	18.8	17.9	17.0	16.0	15.0	13.9	12.8	11.7	10.4	9.2
82	-	-	-	-	-	-	-	-	25.2	24.8	24.2	23.7	23.1	22.4	21.7	21.0	20.2	19.3	18.5	17.5	16.6	15.5	14.5	13.4	12.2	11.0	9.7
83	-	-	-	-	-	-	-	-	-	25.3	24.8	24.2	23.6	23.0	22.3	21.5	20.7	19.9	19.0	18.1	17.1	16.1	15.0	13.9	12.7	11.5	10.3
84	-	-	-	-	-	-	-	-	-	25.9	25.3	24.8	24.2	23.5	22.8	22.1	21.3	20.4	19.5	18.6	17.6	16.6	15.6	14.4	13.3	12.1	10.8

JA6.2 Saturation Pressure Measurement Sensors

JA6.2.1 Purpose and Scope

Appendix JA6.2 specifies the required instrumentation, and the instrumentation accuracy, for a saturation pressure measurement sensor (SPMS) device intended to provide a means for a HERS Rater to observe space conditioning system refrigerant pressure measurement data without attaching refrigerant gages to the refrigerant system service access ports.

The SPMS device manufacturer shall provide certification to the commission that the SPMS device conforms to the requirements of Reference Joint Appendix JA6.2.

JA6.2.2 SPMS Device Approval

SPMS devices, if approved by the Commission, shall be allowed for use for determining compliance with the refrigerant charge verification requirements in the Standards. The Commission may grant such approval after reviewing submittals from the applicant. SPMS devices that are approved by the Commission shall be listed as approved SPMS devices in directories published by Energy Commission.

Manufacturers of approved SPMS devices shall, upon request, provide comprehensive engineering specification documentation, installation and technical field service documentation, and user instructions documentation to installers and service personnel that utilize the procedure.

JA6.2.3 Standard for Saturation Pressure Measurement Sensors

SPMS devices shall measure and report the refrigerant system pressure for both the high pressure side and the low pressure side of the air conditioner or heat pump refrigerant system within the tolerances given in Section JA6.2.3.1.

JA6.2.3.1 Instrumentation Specifications

The pressure measurement instrumentation shall have accuracy equal to or better than the following:

(a) accuracy: ± 7.0 psi liquid line pressure

(b) accuracy: ± 3.5 psi suction pressure

JA6.2.3.2 Installation

SPMS devices shall be installed by the space-conditioning equipment manufacturer, or installed in the field according to any applicable space-conditioning equipment manufacturer requirements, within 12 inches of the refrigerant system service port.

JA6.3 Economizer Fault Detection and Diagnostics Certification Submittal Requirements

Title 24, Part 6 Section 120.2(i) requires that economizer FDD functions be installed on air-cooled unitary air conditioning systems over 54,000 Btu/hr cooling capacity, with the ability to detect the faults specified in Section 120.2(i). Each air conditioning system manufacturer, controls supplier, or FDD supplier wishing to certify that their FDD analytics conform to the FDD requirements of Title 24, Part 6 may do so in a written declaration. This requires that a letter be sent to the California Energy Commission declaring that the FDD conforms to Title 24, Part 6 Section 120.2(i). The declaration at the end of this section shall be used to submit to the California Energy Commission.

JA6.3.1 Information that shall be included with the Declaration

The air conditioning system manufacturer, controls supplier, or FDD supplier provides evidence as shown below:

(a) The following temperature sensors are permanently installed to monitor system operation:
   i. Outside air
   ii. Supply air
   iii. Return air, when required for differential economizer operation.

   Evidence: Photograph or schematic of all required sensors indicating their recommended mounting instructions.

(b) Temperature sensors have an accuracy of ±2°F over the range of 40°F to 80°F
   Evidence: Photocopy of sensor specification

(c) The controller is capable of providing system status by indicating the following:
   i. Free cooling available
   ii. Economizer enabled
   iii. Compressor enabled
   iv. Heating enabled, if applicable
   v. Mixed air low limit cycle active
   vi. The current value of each sensor

   Evidence: Laboratory test: describe how the mode is simulated and the wording used to indicate the status.

(d) The unit controller is capable of manually initiating each operating mode so that the operation of compressors, economizers, fans, and heating system, if applicable, can be independently tested and verified.
   Evidence: Photocopy of controller manual showing instructions for manually initiating each operating mode.

(e) The unit controller is capable of reporting faults one of the following ways:

   A. To an Energy Management Control System regularly monitored by facility personnel, or;

   B. Annunciated locally on one or more zone thermostats, or on a device within five (5) feet of zone thermostat(s), clearly visible, at eye level, and meeting the following requirements:

      i. On the thermostat, device, or an adjacent written sign, display instructions to contact appropriate building personnel or an HVAC technician

      ii. In buildings with multiple tenants, the annunciation shall either be within property management offices, or in common space accessible by the property or building manager.

   C. To a fault management application which automatically provides notification of the fault to a remote HVAC service provider

   Evidence: Supplier's description of how they comply, and supporting documentation such as a photocopy of controller manual or photograph of fault management application, zone thermostat, or other device showing indication of a fault.

(f) The unit control is capable of detecting the following faults:
   i. Air temperature sensor failure/fault
   ii. Not economizing when it should
   iii. Economizing when it should not
   iv. Damper not modulating
   v. Excess outdoor air

JA6.3.2 Fault Detection Test Specifications

To provide evidence that the required faults are detected by the FDD functionality, the FDD Provider shall perform a No-Fault and Fault test for each of the tests in Table 1. A pre-defined Test Procedure such as the one provided in the example shown in Table 2 could be used to fill out Table 1.

Table 1 – Sample of a completed fault test

Tests	Faults: Air temperature sensor failure/fault	Not Economizing when it should	Economizing when it Should not	Damper not modulating	Excess outdoor air
1. Damper is Stuck Open			X	X	X
2. Damper Stuck at Minimum		X		X	
3. Bad or Unplugged Actuator		X	X	X	
4. Sensor Hard Failure	X	X	X		X
5. Actuator Mechanically Disconnected		X	X	X	X

JA6.3.3 Reporting of Test Results

The results of each test shall be provided in a report using a standard test results reporting format that provides the following information for each test:

a. Organization and individual conducting the test

b. Time, Date, and Location of test

c. Make and model of unit/control tested

d. Range of models represented by test

e. Test procedure used, including description of the method for imposing fault with repeatability

f. Test driving Conditions (outdoor air temperature, return air temperature or enthalpy as required by the type of high limit control being used)

g. Results of the test: Which alarms were generated?

h. Provide a bill of materials for the configuration that is being certified.

i. The FDD supplier shall describe any special field or data verifications that are required for the particular FDD analytics (beyond those included in Acceptance Test requirements).

j. Sample of documentation that would accompany each qualifying set of FDD analytics.

k. Name and contact information of company personnel in charge of certification

l. A mapping from the manufacturer's alarm description to what is required by Title 24 similar to Table 1.

Table 2 - Sample Test Procedure

Step	Description	Purpose
1	Close the economizer damper fresh air blades, then secure the blades in a manner that prevents opening.	Test alarm response when "Damper Stuck at Minimum"

2	Simulate conditions such that the damper actuator attempts to open the fresh air blades. Verify the damper blades remains secured and that the fault(s) specified in Table 1 are detected. Record the annunciated fault(s) and fault text.	
3	Release the blades and allow the economizer damper to modulate open. Verify the annunciated fault(s) have cleared.	
4	Open fully the economizer damper fresh air blades, then secure the blades in a manner that prevents closing.	Test alarm response when “Damper is Stuck Open”
5	Simulate conditions such that the damper actuator attempts to modulate the fresh air blade closed. Verify the damper remains secured and that the fault(s) specified in Table 2 are detected. Record the annunciated fault(s) and fault text.	
6	Release the blades and allow the economizer damper to modulate. Verify the annunciated fault(s) have cleared.	
7	Disconnect 1 sensor and verify the fault(s) specified in Table 1 are detected. Record the annunciated fault(s) and fault text.	Test alarm response when “Sensor Hard Failure”
8	Reconnect the sensor and verify that the annunciated fault(s) have cleared.	
9	Repeat steps 7 – 8 for each available sensor.	
10	Electrically disconnect the damper actuator and verify the fault(s) specified in Table 1 are detected. Record annunciated fault(s) and fault text.	Test alarm response when “Bad or Unplugged Actuator”
11	Reconnect the damper actuator. Verify the fault(s) have cleared and normal economizer operation has resumed.	
12	Mechanically disconnect the damper actuator from the damper blade assembly.	Test alarm response when “Actuator Disconnected”
13	Simulate conditions such that the damper actuator would be moving the damper blades. Verify the fault(s) specified in Table 2 are detected. Record annunciated fault(s) and fault text.	
14	Reconnect the damper actuator to the damper blade assembly. Verify the fault(s) have cleared and normal economizer operation has resumed.	
15	Simulate conditions necessary to generate system status of “Free cooling available”. Record text of annunciated status.	Test for System Status Capability
16	Simulate system conditions necessary to generate system status of “Economizer enabled”. Record text of annunciated status.	
17	Simulate system conditions necessary to generate system status of “Compressor enabled”. Record text of annunciated status.	
18	If equipped with a heating system, simulate system conditions necessary to generate system status of “Heating enabled”. Record text of annunciated status.	
19	Simulate system conditions necessary to generate system status of “Mixed air low limit cycle active”. Record text of annunciated status.	

JA 6.3.4 Declaration

Consistent with the requirements of Title 24, Part 6 Sections 100.0(h) and 120.2(i), companies wishing to certify to the California Energy Commission shall execute a declaration under penalty of perjury attesting that all information provided is true, complete, accurate, and in compliance with the applicable provisions of Part 6. Companies may fulfill this requirement by providing the information, signing the declaration below and submitting to the California Energy Commission as ~~per~~as specified by the instructions in JA6.3.5. Electronic copies of this form can be found at http://www.energy.ca.gov/title24/equipment_cert/fdd/.

Manufacturer, Model Name and Number of all devices being certified

Manufacturer	**Model Name**	**Model Number**
_____	_____	_____
_____	_____	_____
_____	_____	_____

When providing the information below, be sure to enter complete mailing addresses, including postal/zip codes.

Certifying Company

Contact Person Name * _____	Phone 1 _____
Certifying Company Name ** _____	Phone 2 _____
Address _____	Fax _____
(Address) _____	E-mail _____
(Address) _____	Company Website (URL) _____

* If the contact person named above is NOT the person whose signature is on the Declaration, then the full contact information for the person whose signature is on the Declaration must also be provided on a separate page.

** If the company named above is: A) a parent entity filing on behalf of a subsidiary entity; B) a subsidiary entity filing on behalf of a parent entity; or C) an affiliate entity filing on behalf of an affiliate entity, the above contact information must be provided for any additional entities on a separate page.

Manufacturer (if different from Certifying Company)

Contact Person Name _____	Phone 1 _____
Manufacturing Company Name _____	Phone 2 _____
Address _____	Fax _____
(Address)	E-mail

_____	_____
(Address) _____	Company Website (URL) _____

Declaration

I declare under penalty of perjury under the laws of the State of California that:

(1) All the information in this statement is true, complete, accurate, and in compliance with all applicable provisions of Section 120.2(i) of Title 24, Part 6 of the California Code of Regulations.

(2) Each Fault Detection and Diagnostic (FDD) system has been tested in accordance with all applicable requirements of Section 120.2(i)1-120.2(i)7 of Title 24, Part 6 of the California Code of Regulations.

(3) [If the party submitting this statement is a corporation, partnership, or other business entity] I am authorized to make this declaration, and to file this statement, on behalf of the company named below.

_____ _____

Certifying Company Name Date

_____ _____

Name/Title (please print) Signature

JA6.3.5 Certification

Send declarations and evidence of functionality or test reports to the addresses below. Electronic submittals are preferred.

(1) Electronic submittal:

CertifiedtoCEC@energy.ca.gov

Attn: FDD Certification

(2) Mail:

Attn: FDD Certification

Building Standards Development Office

California Energy Commission

1516 Ninth St., MS 37

Sacramento, CA 95814

(This page intentionally left blank.)

Joint Appendix JA7

Appendix JA7 – Data Registry Requirements

Table of Contents

Appendix JA7 – Data Registry Requirements 1
JA7.1 Purpose and Scope 3
JA7.2 Definitions 4
JA7.3 Introduction 8
JA7.4 Roles and Responsibilities, and Authorized Users 9
JA7.4.1 Registration Provider 9
JA7.4.2 Authorized Users 9
JA7.4.3 View-Only Authorized User 9
JA7.4.4 Documentation Author 10
JA7.4.5 Field Technician 10
JA7.4.6 Registration Signer (Responsible Person) 10
JA7.4.7 Enforcement Agency 10
JA7.5 Document Registration Requirements 12
JA7.5.1 Overview 12
JA7.5.2 Document Appending 12
JA7.5.3 Data Validation for Compliance Document Registration 13
JA7.5.4 Registration Numbering Conventions 14
JA7.5.5 Verification of Authenticity of Copies of Registered Documents 16
JA7.5.6 Project Document Configuration 16
JA7.5.7 Certificate of Compliance Requirements 18
JA7.5.8 Certificate of Installation Requirements 18
JA7.5.9 Certificate of Verification Requirements 19
JA7.5.10 Certificate of Acceptance Requirements 20
JA7.6 Electronic and Digital Signature Requirements 21
JA7.6.1 Introduction 21
JA7.6.2 Overall Description 21
JA7.6.3 Specific requirements 23
JA7.7 Data Exchange Requirements 28
JA7.7.1 Data Exchange Requirements for Document Registration 28
JA7.8 Data Registry Approval 30

JA7.8.1 Overview 30
JA7.8.2 Application Checklist 30
JA7.8.3 Types of Approval 31
JA7.8.4 Rescinding Approval (Deactivation) of Data Registries 32
JA7.8.5 Data Registry User Manual 33
JA7.9 Approval of Software Used for Data Input to Data Registries 34
JA7.9.1 Overview 35
JA7.9.2 Application Checklist 35
JA7.9.3 Types of Approval 35
JA7.9.4 Rescinding Approval (Deactivation) of Software 36
JA7.9.5 Software User Manual 38
JA7.10 Related Publications 38

JA7.1 Purpose and Scope

Joint Appendix JA7 specifies required functional and technical elements for Data Registries that provide services to authorized users and receive data to produce, register, retain, and distribute copies of compliance documents required for compliance with Title 24, Part 6. The functional and technical elements specified in this document include the following:

(a) Document registration is defined.

(b) Roles and responsibilities for users and administrators of data registries are defined.

(c) Requirements for registered documents are defined.

(d) Requirements for configuration of project documents in the Data Registry are defined.

(e) Requirements for electronic and digital signatures used on registered documents are defined.

(f) Requirements for data exchange between Data Registries and external software tools are defined.

(g) Requirements for transmittal of copies of documents to a document repository at time of registration are defined.

(h) Procedures for approval of Data Registries and software used for data input to data registries are defined.

A Data Registry Requirements Manual is expected to be approved by the Energy Commission to provide additional detailed guidance regarding functional and technical aspects of the requirements in Reference Joint Appendix JA7.

JA7.2 Definitions

For the purposes of the specifications in Reference Joint Appendix JA7, the following definitions shall apply:

Asymmetric Key Encryption is also known as public key encryption. This type of encryption uses a pair of keys that are mathematically related: one key for encryption and another key for decryption. In digital signature processing, a user is assigned a private key that is not shared with anyone, and a public key that is given to anyone who receives digitally signed material from the user.

From California Code of Regulations, Title 2. Administration, Division 7. Secretary Of State Chapter 10. Digital Signatures, 22003, List of Acceptable Technologies: "The technology known as Public Key Cryptography is an acceptable technology for use by public entities in California..."

All major development environments such as Microsoft and Adobe support PKCS1 asymmetrical key encryption.

Authorized User is a person who has a user account with a Data Registry and is required to provide their correct user name and password in order to access the Data Registry. Data Registry users may be required to provide professional licensure, certification or credential information, or other qualifying information as condition of receiving authority to provide signatures for certain types of documentation.

Commission means the State of California Energy Resources Conservation and Development Commission, commonly known as the California Energy Commission, also referred to as the Energy Commission.

Commission Compliance Document Repository (also known as an electronic document repository) is an electronic database and document storage software application used for retention of Registered electronic Compliance Documents generated by Data Registries, and may also contain data and documentation relevant to other regulatory procedures administered by the California Energy Commission. The Commission Compliance Document Repository shall maintain these retained documents in accordance with Evidence Code section 1530-1532 (in the custody of a public entity).

Compliance Data Exchange File is an XML file that contains compliance data used to populate a Compliance Document. The Compliance Data Exchange File is part of the Compliance Registration Package.

Compliance Document is one of the following documents required for demonstration of compliance with Title 24, Part 6: Certificate of Compliance, Certificate of Installation, Certificate of Acceptance, Certificate of Verification.

Compliance Registration Package means encrypted digital data that is transmitted to a Data Registry that contains the data required for registering a Compliance Document with a Data Registry, including the Compliance Data Exchange File. The most commonly used method is the Zip file format, a data compression and archiving specification that is in the public domain. Files transmitted to a Data Registry using the Zip file format shall be password protected as described in JA7.6.3.2.7.

Compliance Report Generator is a web service maintained by the Commission that receives standardized document data exchange files from third party software approved by the Commission and produces the document registration package required to complete registered compliance documents in data registries that are approved by the Commission.

Compliance Software is software approved by the California Energy Commission for use in demonstrating compliance with the performance standards in Title 24 Part 6.

Cryptographic Hash Function is a mathematical function that creates a unique number that represents the contents of a block of data or text. In digital signature processing the data or text that the user is digitally signing is called the message. The number generated by the cryptographic hash function is called the message digest. To verify a copy of the message, the cryptographic hash function is applied to both the original message and the copy of the message, and the resulting message digests are compared. If they are both the same, then the copy is valid.

There is a number of cryptographic hash functions used in digital signature processing. All major development environments such as Microsoft and Adobe support the most commonly used hash algorithm family, SHA-1, SHA-256, SHA-384, SHA-512 hash algorithms which were developed by National Security Agency (NSA).

Data Registry is a web service with a user interface and database maintained by a Registration Provider that complies with the applicable requirements in Reference Joint Appendix JA7, with guidance from the Data Registry Requirements Manual, and provides for registration of residential or nonresidential compliance documentation used for demonstrating compliance with Part 6.

> **Residential Data Registry** is a Data Registry that is maintained by a HERS Provider, that provides for registration, when required by Part 6, of all residential compliance documentation and the nonresidential Certificate of Verification.
>
> **Nonresidential Data Registry** is a Data Registry that is maintained by a Registration Provider approved by the Commission, that provides for registration, when required by Part 6, of all nonresidential compliance documentation. However, nonresidential data registries may not provide for registration of nonresidential Certificates of Verification.

Data Registry Requirements Manual is a document that provides additional detailed guidance regarding the functional and technical aspects of the Data Registry requirements given in Joint Appendix JA7.

Digital Certificate is a computer-based record that contains a person's identifying information and the person's digital signature public key, as well as information about the certificate authority that issued the Digital Certificate and the certificate authority's digital signature verifying the authenticity of the person's identity and digital signature. Although the Secretary of State Digital Signature regulations, Section 22003 (a) 2C states "although not all digitally signed communications will require the signer to obtain a certificate, the signer is capable of being issued a certificate to certify that he or she controls the key pair used to create the signature."

Digital Signature an electronic signature that incorporates cryptographic methods of originator authentication, allowing the identity of the signer and the integrity of the data to be verified. The regulations adopted by the Secretary of State that govern the use of Digital Signatures for use by public entities in California are found in the California Code of Regulations, Title 2, Division 7, Chapter 10 Digital Signatures.

DOCUMENTATION AUTHOR is a person who prepares a Title 24 Part 6 compliance document that must subsequently be reviewed and signed by a responsible person in order to certify compliance with Part 6.

Electronic Signature is a "computer data compilation of any symbol or series of symbols executed, adopted, or authorized by an individual to be the legally binding equivalent of the individual's handwritten signature." US 21 Code of Federal Regulations (CFR) Section 11.3.

For the purposes of using electronic signatures to sign compliance documents, the electronic signature shall be an electronic image of the signer's handwritten signature.

Executive Director means the Executive Director of the Energy Commission.

Field Technician is a person who performs acceptance tests in accordance with the specifications in Reference Joint Appendix NA7, and reports the results of the acceptance tests on the Certificate of Acceptance in accordance with the requirements of Section 10-103(a)4.

HERS is the California Home Energy Rating System as described in TITLE 20, Chapter 4, Article 8, Section 1670.

HERS Provider is an organization that administers a home energy rating system as described in TITLE 20, Chapter 4, Article 8, Section 1670.

HERS Rater is a person who has been trained, tested, and certified by a HERS Provider to perform the field verification and diagnostic testing required for demonstrating compliance with the Part 6, as described in TITLE 20, Chapter 4, Article 8, Section 1670(i).

HERS Provider Data Registry is a Data Registry maintained by a HERS Provider.

Login (see Secure Login).

Message is a block of data or text that has been digitally signed.

Message Digest is the unique number generated when a Cryptographic Hash Function is applied to the Message which is the data or text that is digitally signed.

Password is a string of characters used for authenticating a user on a computer system.

Private Key is one of the keys in Asymmetric Key Encryption used in a Digital Signature. As its name implies, the Private Key should only be known to the owner of the Digital Signature. The private key is used to encrypt the Message Digest of the message that the user digitally signed.

Public Key is one of the keys in Asymmetric Key Encryption used in a Digital Signature. As its name implies, the Public Key must be made public to receivers of digitally signed documents in order to decrypt the Message Digest.

Registered Document is a compliance document that has been submitted to a residential or nonresidential Data Registry for retention, verified as complete, and has gone through the registration process so that the Registered Document displays all applicable electronic signatures as well as the Registration Provider's digital certificate and the document's unique registration number. The image of the registered document is accessible for printing or viewing by authorized users of the Data Registry via the Registration Provider's internet website. The registered document's unique visible registration number is appended onto the document image by the Data Registry.

A Registered Document meets all applicable requirements in Standards Section 10-103(a), Reference Joint Appendix JA7, and may conform to the guidance given in the Data Registry Requirements Manual.

Registration is the process applicable to electronic Compliance Documents that are verified as complete by the Data Registry, and are electronically signed by all required Data Registry Authorized Users. Registration is initiated when an authorized Registration Signer signs the Compliance Document electronically where subsequently the Data Registry adds the Registration Signer's Electronic Signature to the signature block, appends a unique Registration Number to each page of the document, and then applies the Registration Provider's Digital certificate issued by a Certificate Authority approved by the California Secretary of State to the Compliance Document and displays the Registration Provider's digital signature in the signature block. When Registration is complete, the Data Registry immediately and automatically transmits a copy of the completed Registered Compliance Document to the Commission Compliance Document Repository and also retains a copy of the Registered Compliance Document for use by authorized users for submittals.

Registration Number is an alphanumeric sequence of digits and delimiters appended to a Compliance Document when the document's Registration Signer provides his or her Electronic Signature to the Data Registry to complete Registration for any document. Each Registration Number shall be unique to only one document. The registration numbering convention utilizes specific digits to reference the document type, revision level, and the parent-child relationships between the compliance documents in a specific project.

Registration Provider is an organization that administers a Data Registry service that conforms to the requirements in Reference Joint Appendix JA7 and may conform to the guidance given in the Data Registry Requirements Manual.

Registration Signer is a Responsible Person as defined in Title 24, Part 1, Sections 10-103(a)1, 10-103(a)3, 10-103(a)4, or 10-103(a)5 who has established a user account with a Data Registry and has provided sufficient evidence to the Registration Provider to qualify for the authorization to register applicable compliance documentation by providing an electronic signature. The Documentation Author or Field Technician, and Registration Signer on a compliance document may be one and the same person or they may be different persons.

Secure Login means the unique Username and Password given to an Authorized User for maintaining the security of the Data Registry.

Standards means the California Building Energy Efficiency Standards, Title 24, Part 6.

Standards Data Dictionary (SDD) is a dictionary that contains all data and technical terms used to describe building components, equipment, attributes and measurements that are regulated by the

Standards. The purpose of the SDD is to provide the vocabulary that is used in expressing standards as well as published compliance documentation.

URI stands for Uniform Resource Indicator which is a standard for identifying a name or a resource on the Internet.

URL stands for Uniform Resource Locator is a type of URI used to identify locations on the World Wide Web

Username is a name that uniquely identifies someone on a computer system. The Username is paired with a Password to create a Secure Login.

W3C stands for World Wide Web Consortium which is an international standards body that develops standards for the World Wide Web.

XML stands for Extensible Markup Language and is a set of rules for encoding documents in machine-readable form to facilitate the electronic transmission of documents. XML standard was developed by the W3C

XML Schema refers to XML Schema Definition Language, commonly referred to as XSD, which is another standard defined by the W3C. An XML schema uses XSD to define a set of rules to which an XML document must conform in order to be considered valid according to that schema. The rules can include definition of major organizational units, definition of data elements and attributes data types, constraints on valid values such as upper and lower bounds, and whether data is required or optional.

XSL-FO stands for Extensible Stylesheet Language Formatting Objects and is a standard of the W3C for representing content from an XML document. It is based on a standard vocabulary of document plus formatting and layout directives that can be interpreted by a computer application called an FO processor. XSL-FO is commonly used as a intermediary to generate PDF and printable documents.

XSLT stands for Extensible Stylesheet Language Transformation which is a standard from the W3C for translating an XML document into another format such as XSL-FO or HTML.

JA7.3 Introduction

A Data Registry is a web service with a user interface and database maintained by a Registration Provider that provides for registration of residential or nonresidential compliance documentation used for demonstrating compliance with Part 6. Data Registries shall conform to the requirements specified in Reference Joint Appendix JA7 and may conform to the guidance given in the Data Registry Requirements Manual.

A Data Registry shall include the minimum functional features specified by Reference Joint Appendix JA7. Additional guidance on functional features may be given in the Data Registry Requirements Manual.

Document registration is the process for verifying, serializing, and signing electronic compliance documents produced using a method approved by the Commission. Approved Data Registries are the entities that implement and manage the procedures for registering documents. The procedures include authenticating and approving users to submit or sign electronic documents and data for registration, validating that these data and documents are completed in conformance with the requirements defined by the Standard Section 10-103(a) and Reference Joint Appendix JA7, and affixing the electronic signature of the Documentation Author. The registration process is completed only when an authorized registration signer signs the compliance document electronically; whereupon the Data Registry automatically performs the following actions:

(a) Adds the registration signer's electronic signature to the document's signature block.

(b) Appends a unique registration number to each page of the document.

(c) Applies the Registration Provider's digital certificate containing their digital signature to the entire compliance document.

(d) Displays the Registration Provider's digital signature in the signature block that includes a date and time stamp corresponding to the date and time of the document registration process conclusion.

(e) When the document registration process has concluded, the Data Registry shall immediately and automatically transmit a copy of the completed registered compliance document to the Commission Compliance Document Repository.

(f) The Data Registry shall also retain a copy of the registered compliance document for use by authorized users for submittals.

Paper copies of registered compliance documents printed directly from the Data Registry website, or electronic copies downloaded from the Data Registry website shall be used for submittal to enforcement agencies or other parties to the building construction project.

The Registration Provider's digital signature provides for automatic electronic verification of the authenticity of electronic copies of registered documents.

The electronic copies of the registered documents retained by the Commission Compliance Document Repository shall be utilized to satisfy public information requests, perform research, and shall be maintained in a manner conforming to Evidence Code section 1530-1532 (in the custody of a public entity) for use in enforcement of the Standards.

Any person or entity wishing to have a Data Registry approved shall submit an application to the Energy Commission. Data Registries may be approved by the Energy Commission or by the Executive Director to provide document Registration services. Data Registries shall conform to the requirements of Reference Joint Appendix JA7. Detailed guidance for implementation of the requirements in Appendix JA7 may be given in the Registry Requirements Reference Manual.

JA7.4 Roles and Responsibilities, and Authorized Users

This section summarizes the roles and responsibilities for the individuals who participate in the document registration procedures administered by a Data Registry. However, this section is not a complete accounting of the responsibilities of the respective parties.

JA7.4.1 Registration Provider

A Registration Provider is an entity that has been approved by the Energy Commission to provide Data Registry services. Registration Providers maintain Data Registries that conform to the requirements in Reference Joint Appendix JA7 and utilize the guidance in the Data Registry Requirements Manual. Registration Providers are required to retain completed registered compliance documents and make copies of the registered documents available to authorized users for submittals to enforcement agencies or to other parties to the building project that require the documents. Registration Providers make services available that enable authorized users of their Data Registry to verify the authenticity of paper and electronic copies of the retained registered documents.

In order to facilitate Commission oversight of a Registration Provider's documentation processes, the Registration Providers shall grant authorization to Energy Commission staff to view the data and documents retained in the Data Registry, and shall provide functionality that allows Energy Commission staff to query retained data or documents. For residential compliance document registration, the Registration Provider is required to be a HERS Provider approved by the Energy Commission. For nonresidential compliance document registration, the Registration Provider is required to be a Registration Provider approved by the Commission.

JA7.4.2 Authorized Users

Authorized users are persons who have established a user account with a Data Registry and are required to provide their correct user name and password in order to access the secured information in that Data Registry. Data Registry authorized users may be required to provide proof of professional licensure, professional certification, or other qualifying information as a condition for receiving authority to access records or provide signatures for certain types of documentation. User accounts shall be established for each Data Registry for which a user must gain access.

The information required to establish a user account with a Data Registry shall be determined by the Registration Provider who shall gather and verify any and all information necessary to validate a user applicant's identity or applicable professional qualifications as prerequisite to authorizing assignment to a user applicant an electronic signature, or permissions as a documentation author, or permissions as a registration signer.

Authorized Users may not share their Secure Login with any other individual for any purpose. Violation of this policy may constitute fraud, and can be cited as a reason for denial of access for all the persons involved, including the user who releases their Secure Login to another person or persons, and the person or persons who use the Secure Login to gain access the Data Registry.

Additional guidance for establishing user accounts may be given in the Data Registry Requirements Manual.

The roles and responsibilities in the remainder of this section JA7.4 describe specific types of authorized users of the Data Registry. Additional guidance describing roles and responsibilities of Registration Providers and authorized users may be described in the Data Registry Requirements Manual.

JA7.4.3 View-Only Authorized User

Data Registries may provide user accounts that allow users to view only certain records. These types of accounts may allow access to records to view, print or download copies of compliance documents in order to validate the information submitted to enforcement agencies on paper copies of registered documents, and for determining the status of completion of the full documentation package for a project.

JA7.4.4 Documentation Author

Documentation Authors are persons who prepare Title 24 Part 6 compliance documents that must subsequently be reviewed and signed by a Registration Signer (responsible person) in order to certify compliance with Part 6.

Documentation Authors assist with input of information required to complete the compliance documents required for the registration procedures in a Data Registry. Documentation authors who provide support for preparation of compliance documents in a Data Registry shall establish a user account and an electronic signature authority with the Data Registry. Documentation Authors shall sign the documents they prepare, but documentation author signatures do not indicate or assume responsibility for the truth or validity of the information reported on a compliance document. Documentation Authors may engage in business relationships with the Registration Signers they assist, or they may be employees of the Registration Signers they assist.

JA7.4.5 Field Technician

The Field Technician is responsible for performing the acceptance test procedures and documenting the results of the acceptance tests on a Certificate of Acceptance. The Field Technician shall sign the Certificate of Acceptance to certify that the information he reports on the Certificate of Acceptance is true and correct. When registration of a Certificate of Acceptance is required, the Field Technician shall establish a user account and an electronic signature authority with the Data Registry in order to provide electronic signatures to complete the Certificate of Acceptance. When a Field Technician also performs the data input to prepare the Certificate of Acceptance documentation, the Field Technician shall also provide the documentation author signature on the Certificate of Acceptance. The Field Technician may be, but is not required to be the installer of the system that requires Acceptance Testing.

JA7.4.6 Registration Signer (Responsible Person)

The Registration Signer is the person responsible for the work identified on a compliance document (Certificate of Compliance, Certificate of Installation, Certificate of Acceptance, or Certificate of Verification).

(a) **For Certificate of Compliance documentation**, the Registration Signer shall be eligible under Division 3 of the Business and Professions Code to accept responsibility for the building design.

(b) **For Certificate of Installation documentation**, the Registration Signer shall be eligible under Division 3 of the Business and Professions Code to accept responsibility for the building construction or installation in the applicable classification for the scope of work identified on the document.

(c) **For Certificate of Acceptance documentation**, the Registration Signer shall be eligible under Division 3 of the Business and Professions Code to accept responsibility for the system design, construction or installation in the applicable classification for the scope of work identified on the document.

(d) **For Certificate of Verification documentation**, the Registration Signer shall be a certified HERS Rater.

The Registration Signer shall provide a signature to certify that the information reported on a compliance document for which he is responsible is true and correct. When registration of a compliance document is required, the Registration Signer shall establish a user account and an electronic signature authority with the Data Registry. When a Registration Signer also performs the data input to prepare a compliance document, the Registration Signer shall also provide the documentation author signature on the compliance document.

JA7.4.7 Enforcement Agency

Standards Section 10-103(d) requires the Enforcement Agency to verify that all required compliance documents for a project are completed, signed, and submitted or posted as required by Standards Section 10-103(a). Thus, when Section 10-103(a) requires that a compliance document be registered with a Data

Registry, the Enforcement Agency must verify that compliance documents submitted when applying for a permit, or posted in the field are registered documents. Such enforcement agency verification shall be by any valid means the Enforcement agency considers satisfactory.

Enforcement Agency persons may establish user accounts with data registries to enable viewing the compliance documents for projects for which their jurisdiction has enforcement authority.

Enforcement Agencies may be authorized to enter notations into project records in data registries to communicate plan check and field inspection information to builders, designers, installers and raters.

JA7.5 Document Registration Requirements

JA7.5.1 Overview

All compliance documents for which registration is required shall be produced by a method approved by the Commission and then registered with an approved Data Registry by authorized users of the Data Registry. Procedures for submittal of required documentation to enforcement agencies and other parties to the building construction project are given in Reference Residential Appendix RA2, and Reference Nonresidential Appendices NA1. Standards Section 10-103(a) defines the administrative requirements for the compliance documents (Certificate of Compliance, Certificate of Installation, Certificate of Acceptance, and Certificate of Verification).

Compliance document layouts shall be defined by standardized data structures implemented according to the requirements given in JA7.7. Compliance documents produced by the Data Registry shall conform to the applicable informational content and graphical layout formatting approved by the Energy Commission.

The Data Registry shall be capable of tracking all compliance documentation and maintaining the correct associations between related documents within a building project. Any revisions to compliance documents shall be tracked and reported.

The Data Registry shall ensure that registered documents are retained such that they are available to authorized users for submittals to enforcement agencies or other parties to the building construction project that require copies of the registered compliance documents.

Contingent upon the availability of a Commission Compliance Document Repository, the Data Registry shall immediately and automatically, upon concluding the registration of compliance documents, transmit a copy of each registered compliance document to the Commission Compliance Document Repository.

JA7.5.2 Document Appending

The compliance document informational content, graphical layout, and formatting used by the Data Registry shall conform to the document layouts and data structures approved by the Energy Commission as further described in Section JA7.7. The Data Registry shall be capable of receiving electronic compliance documents and compliance data produced by the methods approved by the Commission, and append the compliance documents received from authorized users according to the requirements in JA7.5.

When data exchange procedures for compliance documents are required, the data definitions and data formatting required by Section JA7.7 shall be used.

Electronic document layouts implemented in Commission-approved methods for producing compliance documents shall include specifications indicating coordinate locations and positions where the Data Registry will affix Registration Signer's Electronic Signatures, registration numbers, registration date and time record information and Data Registry provider logos and watermarks.

The ACM Reference Manual will include additional detailed guidance necessary to assist compliance software tools in providing document output formatted to coordinate with these Data Registry-specific information features.

The following conventions shall be enforced:

JA7.5.2.1 Registration Number

The registration number for a multiple-page document shall be visible on all pages of the document.

JA7.5.2.2 Registration Date and Time

The registration date and time shall reflect the point in time corresponding to the submittal of the electronic certification signature by the person responsible for the information on the document. The format for the registration date and time record shall be calendar date (year-month-day) with time of day (hour-minutes-

seconds). Hour of the day shall utilize 24-hour format. Additional guidance describing the formatting and location for these features may be given in the Data Registry Requirements Manual.

JA7.5.2.3 Performance Compliance Software Calculation Date and Time

The performance compliance calculation date and time information that is generated by the compliance software tool shall be retained as data in the record for the registered Certificate of Compliance document in the Data Registry.

The date and time information for the compliance calculation for a multiple-page performance Certificate of Compliance document shall be visible on all pages of the compliance document.

JA7.5.2.4 Electronic Signatures

Registered documents shall be electronically signed by the documentation authors, and by the persons who are eligible to assume responsibility for the documentation as specified by Standards Section 10-103(a) and who are authorized users of the Data Registry who have established an electronic signature authority with the Data Registry. The Registration Provider shall ensure that all required electronic signature features and procedures specified in Section JA7.6 are implemented and enforced. The electronic signature layouts and locations shall be consistent with the document layouts approved by the Energy Commission. Additional guidance on the location and formatting may be given in the Data Registry Requirements Manual.

JA7.5.2.5 Digital Signatures

The Registration Provider shall ensure that the required digital signature procedures specified in Section JA7.6 are enforced. Guidance for the location for the visible aspects of the Registration Provider's digital signature may be described in the Data Registry Requirements Manual.

JA7.5.3 Data Validation for Compliance Document Registration

Data Registries shall have the capability to automatically perform validation of data entered by a documentation author to complete a compliance document as required by the document data validation procedures in Section JA7.6.3.2.2.

There shall be a data validation rule set specific to each compliance document.

Detailed guidance for the data validation rules may be provided in the Data Registry Requirements Manual.

Compliance document data validation rules may be implicit in the formatting of the data elements that define a compliance document for data exchange processes, or data validation rules may be implemented by the Data Registry software.

Data validation rules or specifications may be defined in the XML schema that represents the compliance data for a compliance document as further described in Section JA7.7. Validation criteria such as whether data is required or optional, the required data type, the data numeric upper and lower bounds, acceptable enumeration values, calculations that must be performed, etc., can all be defined in the XSD file.

The Data Registry Requirements Manual will provide guidance for the methods for validation of the data taking into consideration the specifications for the data elements for the data exchange processes described in Section JA7.7.

The Data Registry may flag data entry errors at any time during data entry, however all data validation shall be completed prior to allowing a documentation author signature action to be completed. Documents shall not be marked as ready for registration signing unless all required data validation errors have been corrected, and a documentation author signature action has been completed successfully.

The following conventions shall be enforced as a condition for registration of a document:

JA7.5.3.1 Null Entries

When completion of a compliance document requires data entry for an information field, the data shall be entered, otherwise registration shall not be allowed. However, if data entry for a particular information field is optional, a null entry shall not prevent registration from concluding.

JA7.5.3.2 Calculated Values

Whenever possible or practical, the Data Registry shall perform the calculations required for determining compliance results. Guidance for calculations may be given in the Data Registry Requirements Manual.

JA7.5.3.3 Look-up Functions for Calculations

Whenever possible or practical, the Data Registry shall use lookup functions that provide values needed for completing calculations as referenced from the applicable protocols in the Reference Appendices or from Standards compliance criteria. Guidance for application of lookup functions may be given in the Data Registry Requirements Manual. .

JA7.5.4 Registration Numbering Conventions

Registration numbers used for the document registration procedures described in Joint Appendix JA7 are alphanumeric sequences of digits and delimiters that are appended to a compliance document when the document's registration signer performs an electronic signature action in the Data Registry to conclude the registration procedure for a document. Each registration number shall be unique to only one document. The registration numbering convention assigns significance to certain digits in order to define the document type, document revision level, and the parent-child relationships between the compliance documents contained in a project. As the compliance document types required for residential projects are different than those required for nonresidential projects, the numbering conventions used shall conform to the conventions specified in sections JA7.5.4.1 and JA7.5.4.2 respectively.

Registration numbering conventions for other documentation processes are possible. Any new document process for which the Commission requires the documents to be registered shall use a registration numbering convention that is approved by the Commission.

JA7.5.4.1 Nonresidential Registration Numbering Convention

Contingent upon approval of nonresidential Data Registries, a nonresidential registration numbering convention shall be determined and approved by the Commission in conjunction with the approval of the first nonresidential Data Registry, and shall be used by all nonresidential data registries thereafter. The nonresidential registration numbering convention specification shall use a similar design concept as used in the residential registration numbering convention specified in Section JA7.5.4.2 which assigns significance to digits in order to define the document type, document revision level, and the relationships between the compliance documents contained in a project.

JA7.5.4.2 Residential Registration Numbering Convention

The registration numbers assigned to residential compliance documents by the Data Registry at the conclusion of the registration process shall conform to the conventions described in this section. Refer to Figure JA7.5-1 for information that defines the numbering convention, and an example registration number.

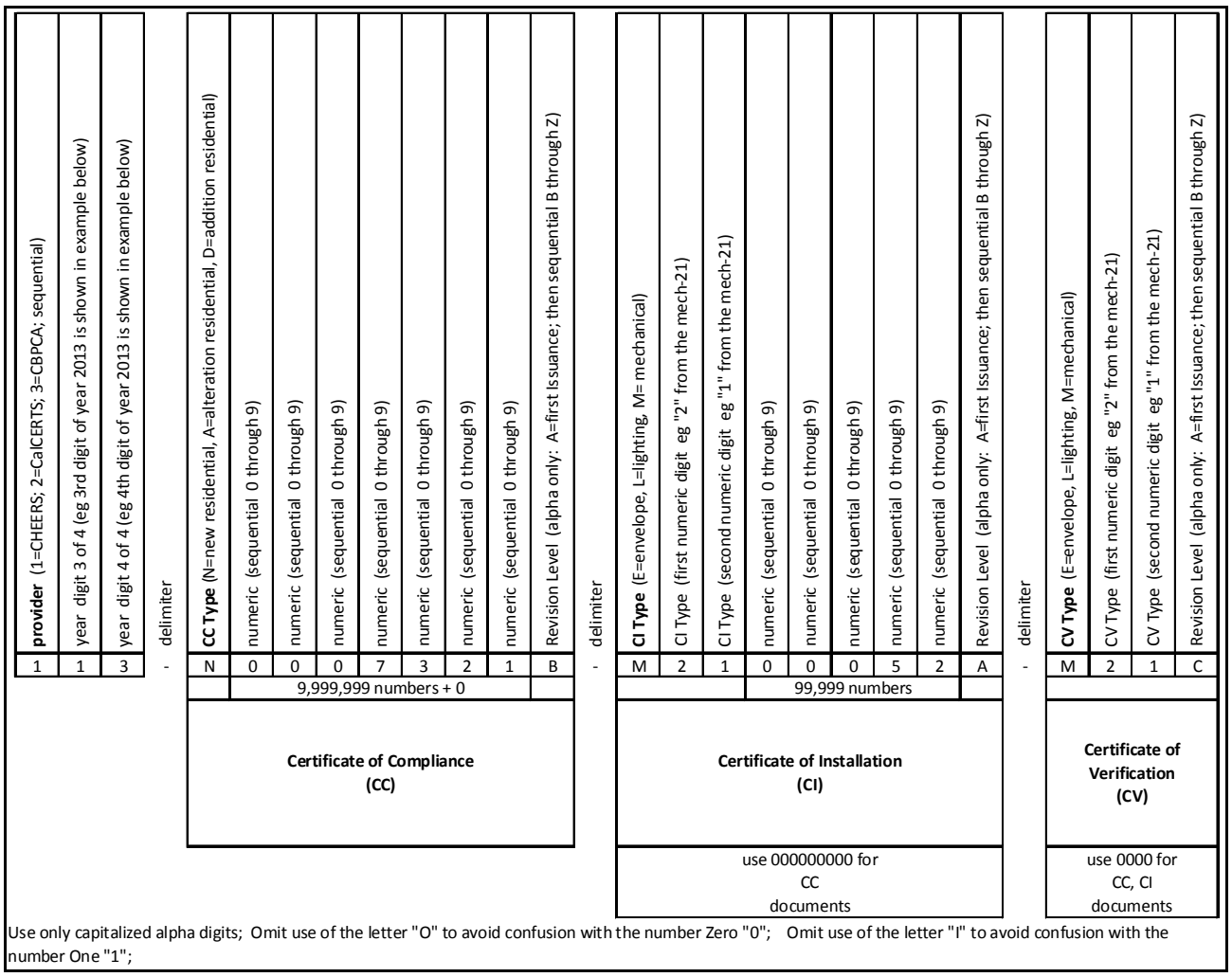

Figure JA7.5-1. Residential Registration Numbering Convention (and Example Number)

As shown in Figure JA7.5-1, the significance of the digits provides descriptors for: the Registration Provider; the year; the type of compliance document; relationships between the documents; and the revision level of the respective documents. The digit type (Alpha or Numeric) and sequencing are also given.

The following are examples of registration numbers and the interpretation of the significance of the numbering as consistent with the descriptions given in Figure JA7.5-1.

113-N0007321B-000000000-0000: CHEERS Provider, 2013 year project, residential new construction Certificate of Compliance document type, and sequential number 0007321, revision B.

113-N0007321B-M2100052A-0000: Certificate of Installation document type associated with the above Certificate of Compliance #113-N0007321B-00000000-0000, MECH-21 Certificate of Installation type, and sequential number 00052, revision A.

113-N0007321B-M2100052A-M21C: Certificate of Verification associated with the above Certificate of Installation #113-N0007321B-M2100052A-0000, MECH-21 HERS Certificate of Verification document type, revision C.

JA7.5.5 Verification of Authenticity of Copies of Registered Documents

For projects for which Standards Section 10-103(a) requires the documents to be registered, compliance requires that documents shall first be registered with a Data Registry before being submitted to an enforcement agency for approval. Additionally, when revisions to the compliance documents are necessary, compliance requires the revised documents to be registered with the Data Registry prior to re-submittal to the enforcement agency for approval. Thus, the current revision of a registered document in the Data Registry shall be the reference document for validation of the authenticity of a document submitted to an enforcement agency or to another party to the construction project.

Registration Providers shall make available document verification services to authorized users of their Data Registry.

Methods for verification of a document's authenticity shall include basic visual comparison of a copy of a registered document to the current version of the registered document on file in the Data Registry.

Additionally, the automated document validation utility that is made possible by digital signature technology makes it possible for a document recipient to automatically verify an electronic copy of a registered compliance document without having to manually inspect it against the registered document in the Data Registry. As described in Section JA7.3, the last step in the document registration procedure in the registry applies the Registration Provider's digital certificate containing their digital signature to the entire compliance document, thus providing the capability for automated verification of authenticity of electronic copies of the registered document.

Additional guidance for use of the Data Registry digital signature technology for verification of document authenticity may be given in the Data Registry Requirements Manual, and in the Residential and Nonresidential Compliance Manuals.

JA7.5.6 Project Document Configuration

Data Registries shall be capable of tracking all compliance documentation and maintaining the correct associations between related documents, including revisions and completion statuses for all documents within a building project.

A certificate of compliance establishes the requirements for project documentation for prescriptive and performance compliance methods.

2013 Standards introduced mandatory HERS verification for residential projects for which there are options for compliance with the mandatory requirement. Thus, indication of the option selected for compliance with a residential mandatory measure may not be known until after a Certificate of Installation is submitted to a Data Registry to demonstrate compliance with the mandatory requirement. The Data Registry shall track when Certificate of Installation documents are registered for any mandatory measure that has an option for compliance; shall report any HERS verification requirement that is triggered by the mandatory measure; and ensure that any required HERS verification is completed as a condition of compliance. Additional guidance describing residential Data Registry tracking of mandatory measure options and the required documentation for the mandatory options may be provided in the Data Registry Requirements Manual.

JA7.5.6.1 Project Status Reports

The status of completion of a project shall be reported by the Data Registry.

The Data Registry shall determine the documents required for a project based on the Certificate of Compliance and maintain a summary that reflects the current status of completion of the required documents and shall be readily accessible to authorized users of the Data Registry. Access to the report shall be facilitated by use of search parameters relevant to the project as listed in Sections JA7.5.6.1.1 and JA7.5.6.1.2.

Enforcement Agencies may be authorized to enter notations into project records in data registries to communicate plan check and field inspection information to builders, designers, installers and raters.

The project status report shall be made available in a printable format.

Minimum information requirements for the project status report shall include the following:

JA7.5.6.1.1 Project Status Report Information for Residential Projects:

(a) Project name

(b) Project location (or address)

(c) Listing of the Certificate of Compliance documents required; date registered (or indicate not complete if the document record has been started but is not yet registered); registration number

(d) Listing of the Certificate of Installation documents required; date registered (or indicate not complete if the document record has been started but is not yet registered); registration number

(e) Listing of the Certificate of Verification documents required; date registered or indicate not complete if the document record has been started but is not yet registered); registration number

(f) Listing of the mandatory measure options required; options selected (refers to the Certificate of Installation and Certificate of Verification documentation).

JA7.5.6.1.2 Project Status Report Information for Nonresidential Projects:

Note: Nonresidential Document registration is contingent upon approval of a nonresidential Data Registry by the Commission, and the requirement for nonresidential document registration is not effective until January 1, 2015.

(a) Project name

(b) Project location (or address)

(c) Listing of the Certificate of Compliance documents required; date registered (or indicate not complete if the document record has been started but is not yet registered); registration number

(d) Listing of the Certificate of Installation documents required; date registered (or indicate not complete if the document record has been started but is not yet registered); registration number

(e) Listing of the Certificate of Acceptance documents required; date registered (or indicate not complete if the document record has been started but is not yet registered); registration number

(f) Listing of the Certificate of Verification documents required; date registered (or indicate not complete if the document record has been started but is not yet registered); registration number.

JA7.5.6.2 Revision Control

When a revision to a compliance document is made, the revised version of the compliance document shall also be registered (a registration signer must sign again to register the revision), and the revision digit for the compliance document shall be incremented. Thus a copy of each registered revision of each registered document shall be transmitted to the Commission Compliance Document Repository.

When a revision is made to a compliance document that is associated with one or more registered dependent (child) documents, the dependent documents shall have their registered status revoked, and their status shall be reported as incomplete (orphaned) until signed again by the registration signer subsequent to making any necessary changes to the "orphaned child" document made necessary by the revision of the applicable dominant (parent) document. A new registration signature is required for the orphaned child document in order to update the registration number such that the new revision level of both the parent and the child documents is shown.

A copy of the new revision of a document shall be submitted to the enforcement agency for all applicable approvals or inspections.

The data that was used to create obsolete versions of compliance documents shall not be required to be retained in the Data Registry history or memory. However, a copy of each revision of each registered electronic document shall be retained.

The current revision of any document in the registry shall be considered to be the only valid version of that document. All previous revisions of that document shall be considered obsolete, thus not valid for use for submittal to enforcement agencies to demonstrate compliance.

JA7.5.7 Certificate of Compliance Requirements

JA7.5.7.1 Prescriptive Certificate of Compliance Document

Procedures for submittal of prescriptive Certificate of Compliance documents may be by direct keyed-in data entry as described in Section JA7.7.1.1, or by other methods if approved in accordance with Section JA7.9. Guidance for the procedures and requirements for Data Registry features for prescriptive certificate of compliance document registration may be given in the Data Registry Requirements Manual.

JA7.5.7.2 Performance Certificate of Compliance Document:

Procedures for submittal of the performance Certificate of Compliance shall use Compliance Software approved by the Commission pursuant to all applicable procedures in Title 24 Part 1, Section 10-109, and shall conform to all applicable data exchange requirements given in Section JA7.7.

JA7.5.7.3 Multiple Orientation Plans (Residential)

The Data Registry shall ensure that multiple orientation performance Certificate of Compliance documents are configured in the Data Registry such that the registered multiple orientation Certificate of Compliance document is referenced for all build-outs of that master plan. The registered Certificate of Compliance that was approved by the enforcement agency shall be the Certificate of Compliance document that is the parent document for each and every dwelling unit built from that master plan.

Detailed guidance describing the procedures for tracking revisions to multiple orientation Certificate of Compliance Documents may be given in the Data Registry Requirements Manual.

JA7.5.7.4 Multifamily Dwelling units

The Data Registry shall ensure that multifamily whole-building performance Certificate of Compliance documents are configured in the Data Registry such that the registered multifamily Certificate of Compliance document is referenced for all dwelling units in the multifamily building. The registered Certificate of Compliance that was approved by the enforcement agency shall be the Certificate of Compliance document that is the parent document for each and every dwelling unit specified by that whole-building certificate of Compliance document.

Detailed guidance describing the procedures for tracking revisions to multifamily whole-building Certificate of Compliance Documents may be given in the Data Registry Requirements Manual.

JA7.5.8 Certificate of Installation Requirements

JA7.5.8.1 Residential Certificate of Installation

Procedures for submittal of residential Certificate of Installation documents may be by direct keyed-in data entry as described in Section JA7.7.1.1, or by other methods if approved in accordance with Section JA7.9. Detailed guidance for the functional and technical elements necessary for registration of residential Certificate of Installation for a Data Registry may be given in the Data Registry Requirements Manual.

JA7.5.8.2 Nonresidential Certificate of Installation

Nonresidential Certificate of Installation document registration is contingent upon the approval of nonresidential Data Registries, and in any event shall not be required before January 01, 2015.

Procedures for submittal of Nonresidential Certificate of Installation documents may be by direct keyed-in data entry as described in Section JA7.7.1.1, or by other methods if approved in accordance with Section JA7.9. Detailed guidance for the functional and technical elements necessary for registration of Nonresidential Certificate of Installation documents for a Data Registry may be given in the Data Registry Requirements Manual.

JA7.5.9 Certificate of Verification Requirements

Certificate of Verification documents are always registered documents.

Procedures for submittal of Certificate of Verification documents may be by direct keyed-in data entry as described in Section JA7.7.1.1, or by other methods if approved in accordance with Section JA7.9. Detailed guidance for the required functional and technical elements necessary for registration of Certificate of Verification documents for a Data Registry may be given in the Data Registry Requirements Manual.

JA7.5.9.1 Managing Sample Groups

HERS Provider Data Registries are required to manage the group sampling procedures. Details that describe the requirements for managing sample groups are given in Reference Residential Appendix RA2 and in Reference Nonresidential Appendix NA1.

JA7.5.9.2 Group Numbering Convention

Group number is a HERS Provider-designated identification number unique to the sample group to which a dwelling has been assigned. The Providers shall utilize the numbering convention given in Figure JA7.5-2. below. The group number shall be reported on all Certificate of Verification documents that utilize group sampling for compliance.

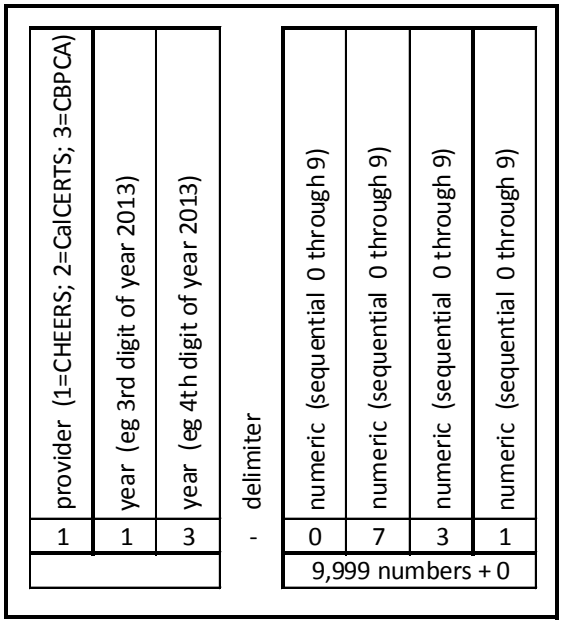

Figure JA7.5-2. Group Numbering Convention (and Example Number)

The following is an example group number and the interpretation of the significance of the numbering consistent with the descriptions given in Figure 4-1.

113-0731: CHEERS, group opened during year 2013, sequential group number 0731

JA7.5.10 Certificate of Acceptance Requirements

Certificate Acceptance document registration is contingent on the approval of nonresidential Data Registries, and in any event shall not be required before January 01, 2015.

Procedures for submittal of Certificate Acceptance documents may be by direct keyed-in data entry as described in Section JA7.7.1.1, or by other methods if approved in accordance with Section JA7.9. Detailed guidance for the required functional and technical elements necessary for registration of Certificates of Acceptance documents for a Data Registry may be given in the Data Registry Requirements Manual.

JA7.6 Electronic and Digital Signature Requirements

JA7.6.1 Introduction

This section defines the functional and technical requirements for the use of electronic and digital signatures in the registration of compliance documents. These specifications shall be implemented by a Data Registry as a condition of approval of the Data Registry by the Commission.

JA7.6.2 Overall Description

JA7.6.2.1 Interfaces - Main Users

(a) **Authorized Users** of Data Registries who must sign Compliance Documents either as the Documentation Author, or Field Technician, or as the Registration Signer (responsible person).

(b) **Registration Providers** who must implement the electronic and digital signature specifications into the Data Registry user interface to provide Electronic Signature capabilities to the Authorized Users of the Data Registry, and must append their digital signature to all registered compliance documents created in their Data Registry.

(c) **Commission Compliance Document Repository** which must receive registered documents transmitted from the Data Registries and will process the digital signature to validate the sender and the contents.

(d) **Persons or Software Entities who Validate Electronic Documents** who may receive electronic copies of registered documents made available by the Data Registries and will process the digital signature to validate the sender and the contents.

(e) **Compliance Software Tools** that export compliance documents for transmittal to the Data Registries that must subsequently be electronically signed and registered in the Data Registry.

JA7.6.2.2 Major Functions

The electronic and digital signature requirements of the Data Registry consist of the following major functions:

JA7.6.2.2.1 Electronic Signature Capability

The Data Registry shall provide electronic signature capability to authorized users.

JA7.6.2.2.2 Document Data Validation

The Data Registry shall check that compliance documents are complete and the data entered meets the data validation rules for the applicable document before making the documents available for signing or registering.

JA7.6.2.2.3 Signer Review and Signature Actions

The Data Registry shall provide functionality for authorized users to select, review, and sign compliance documents as a Documentation Author, Field Technician, or Registration Signer.

JA7.6.2.2.4 Digital Signatures

The Data Registry shall apply the Registration Provider's Digital Signature to compliance documents electronically signed by the registration signer when concluding the document registration procedure in the Data Registry, and then append the Registration Provider's digital certificate issued by a certificate authority approved by the California Secretary of State.

The function of the Registration Provider's digital certificate is to provide verification from an approved certificate authority that the document came from the Registration Provider's Data Registry and to provide automated document verification to persons or agencies that receive electronic submittals of these registered documents.

JA7.6.2.2.5 Transmittal to Commission Compliance Document Repository

The Data Registry, upon completion of the registration procedure, shall immediately and automatically transmit a copy of the completed registered compliance document to the Commission Compliance Document Repository which will process the Registration Provider's digital certificate to validate the sender and the compliance document contents.

JA7.6.2.2.6 Document Retention

The Data Registry shall retain a copy of the completed registered electronic compliance document and make the document available for use by authorized users of the registry who may access a copy of the registered document and may subsequently process the Registration Provider's digital certificate to verify the sender and the compliance document contents.

JA7.6.2.2.7 Receive and Process Output From Compliance Software and Other Software Tools

The Data Registry shall process the completed Compliance Registration Package from Compliance software tools or other software tools approved by the Commission for use in the Compliance Document Registration process.

JA7.6.2.3 User Characteristics

There are four categories of users who will participate in the electronic and digital signature functionality:

JA7.6.2.3.1 Users who will use electronic signatures to sign and register compliance documents.

This is a heterogeneous category composed of HERS Raters, building designers, building contractors, installation contractors, energy consultants, home owners, and others.

JA7.6.2.3.2 Users who use a digital certificate to secure registered compliance documents.

This category consists of each approved Registration Provider.

JA7.6.2.3.3 Users who will receive the electronically transmitted registered compliance documents

These users will need to apply decryption processing using the digital certificate to identify the sender and verify the contents of the received document. The Commission Compliance Document Repository is a main user in this category. Also, users who take advantage of digital signature automated verification capabilities to verify the authenticity of registered compliance documents received as electronic submittals from various other participants in the compliance documentation process will be another main user in this category.

JA7.6.2.3.4 Users who transmit electronic compliance documentation to the Data Registry.

Title 24 compliance software tools are the main users in this Category. The electronic compliance documents exported from the compliance tools must be formatted to provide location coordinate information for use when applying the visible aspects of electronic and digital signatures to the compliance documents. The Data Registry must be capable of appending the visible aspects of electronic and digital signatures to the correct locations in the signature blocks on the imported compliance documents during the subsequent electronic signature and registration procedures.

Detailed guidance for electronic and digital signature target coordinate information may be described in the ~~2013~~2016 Alternative Calculation Method (ACM) Reference Manual to assist in the implementation of the requirements by compliance software vendors. The Data Registry shall implement the capability to append

the visible aspects of electronic and digital signatures to the signature blocks on compliance documents in these locations.

JA7.6.2.4 Constraints

JA7.6.2.4.1 Schedule Constraint:

The electronic and digital signature capabilities shall be implemented at least six months before the effective date for the ~~2013~~2016 Standards.

JA7.6.2.4.2 Software Constraint:

The digital signature technology including the hash algorithm and asymmetric key encryption used shall be consistent across all Data Registries because the Commission Compliance Document Repository will not support multiple approaches.

JA7.6.3 Specific requirements

JA7.6.3.1 Interface Requirements

JA7.6.3.1.1 User interfaces

JA7.6.3.1.1.1 All Data Registries shall utilize the same informational content, graphical layout and formatting unique to the applicable type of compliance document when displaying the completed compliance documents for review and signing as part of the registration process. These document layouts shall conform to the informational content, graphical layout and formatting approved by the Commission. Additional detailed guidance regarding informational content, graphical layout and formatting will be presented in the Data Registry Requirements Manual.

JA7.6.3.1.2 Software interfaces

JA7.6.3.1.2.1 All registered compliance documents transmitted from any Data Registry shall be secured with the Registration Provider digital signature.

JA7.6.3.1.2.1.1 All Data Registries shall use the same hash algorithm to generate the document's message digest for the digital signature.

JA7.6.3.1.2.1.2 All Data Registries shall use the same asymmetrical key encryption for generating the digital signature private and public keys used to encrypt and decrypt the message digest.

JA7.6.3.1.2.1.3 Registration Providers shall provide their digital certificate which contains their digital signature public key to any other software entity that receives registered compliance documents from their Data Registry, in particular the Commission document repository.

JA7.6.3.1.2.1.4 The Commission document repository, which will receive registered compliance documents electronically from Data Registries, will have to implement digital signature processing capability in order to perform automatic verification and validation processing on received documents.

JA7.6.3.1.2.1.5 Users who take advantage of digital signature automated verification capabilities to verify the authenticity of registered compliance documents received from Data Registries will have to implement digital signature processing capability in order to perform automatic verification and validation processing on received documents. The Adobe Reader software tool, which is freeware, has the capability to process the digital signatures for any digitally signed documents that utilize standardized digital signature technology.

JA7.6.3.1.2.2 All Data Registries shall implement the same security protocol for importing completed compliance document transmittals generated by 3rd party software tools. The security protocol shall be approved by the Commission.

JA7.6.3.1.2.2.1 Guidance shall be provided in the ~~2013~~2016 ACM Reference Manual and the ~~2013~~2016 Data Registry Requirements Manual to assist all 3rd party software entities in implementing the required security protocols.

JA7.6.3.2 Functions

JA7.6.3.2.1 Electronic Signature Capability

The Data Registry shall provide electronic signature capability to authorized users who have the role of Documentation Author, Field Technician, or Registration Signer. A Field Technician Signature is required only on Certificate of Acceptance Documentation. A Certificate of Acceptance document requires that there be both a Documentation Author signature and a Field Technician signature prior to registration signing.

JA7.6.3.2.1.1 Any authorized user of a Data Registry can request an electronic signature in order to sign compliance documents as the documentation author, Field Technician, or as the registration signer.

JA7.6.3.2.1.2 Registration Providers shall gather and verify any and all information necessary to validate a user applicant's identity and applicable qualifications as prerequisite to authorizing assignment to a user applicant an electronic signature, or permissions as a documentation author, Field Technician, or Registration Signer.

JA7.6.3.2.1.3 Authorized users shall provide to the Data Registry an electronic image of their handwritten signature for use in displaying their electronic signature.

JA7.6.3.2.2 Document Data Validation

The Data Registry shall check that compliance documents are complete and shall perform the required data validation for the document before making them available for signing and/or registering. The guidance for the data validation for each document shall be provided in the Data Registry Requirements Manual.

Any applicable error messages shall be posted indicating the actions necessary as prerequisite to completion of the registration process.

JA7.6.3.2.2.1 When a documentation author indicates that the compliance document is complete and he/she is ready to sign it, the Data Registry shall verify that all information necessary to complete the document has been provided as prerequisite to making the signing functionality available to the documentation author.

JA7.6.3.2.2.2 The Data Registry shall verify that a compliance document is complete and has received the documentation author's signature as prerequisite to making the compliance document available for registration signing. For Certificate of Acceptance documents, both the Documentation Author and the Field Technician signatures shall be provided as prerequisite to making the document available for registration signing.

JA7.6.3.2.3 Signer Review and Signature Actions

The Data Registry shall provide functionality for authorized users to select, review and sign compliance documents as a documentation author, field technician, or registration signer.

JA7.6.3.2.3.1 The documentation author can electronically sign a compliance document if it has been verified as complete by the Data Registry.

JA7.6.3.2.3.2 The Field Technician can electronically sign a Certificate of Acceptance document if it has been verified as complete by the Data Registry and has the documentation author's signature.

JA7.6.3.2.3.3 The registration signer can electronically sign a compliance document if it has been verified as complete by the Data Registry and has the documentation author's signature. For Certificate of Acceptance documents both the Documentation Author signature and the Field Technician signature are prerequisite to allowing registration signing.

JA7.6.3.2.3.4 When an authorized user selects to sign a compliance document, the Data Registry provides a display of the compliance document layout that allows the user access to any part of the compliance document for review, as well as a display of the declaration statement.

JA7.6.3.2.3.4.1 All compliance documents shall include a declaration statement applicable to the documentation author signature. The declaration statement language shall be approved by the Commission.

JA7.6.3.2.3.4.2 All Certificate of Acceptance documents shall include a declaration statement applicable to the field technician signature. The declaration statement language shall be approved by the Commission.

JA7.6.3.2.3.4.3 All compliance documents shall include a declaration statement applicable to the registration signer signature. The declaration statement language shall be approved by the Commission.

JA7.6.3.2.3.4.4 All compliance document layouts displayed shall conform to the same format, informational order, and content approved by the Commission. Guidance for data and layout specifications shall be published in the Data Registry requirements manual.

JA7.6.3.2.3.5 When the documentation author activates the signing control to sign the compliance document, the Data Registry shall display the completed documentation author signature block including the documentation author's electronic signature utilizing the visible image of his or her hand written signature, applicable professional qualifications, licenses and/or certificates the documentation author holds, and the date and time the document was signed.

JA7.6.3.2.3.6 When the Field Technician activates the signing control to sign the Certificate of Acceptance document, the Data Registry shall display the completed field technician's signature block including the Field Technician's electronic signature utilizing the visible image of his or her hand written signature, applicable professional qualifications, licenses and/or certificates the Field Technician holds, and the date and time the document was signed.

JA7.6.3.2.3.7 When the registration signer activates the signing control to register the compliance document, the Data Registry shall display the completed signature block including the registration signer's electronic signature utilizing the visible image of his or her hand written signature, applicable professional qualifications, licenses or certificates the registration signer holds, the date and time the document was signed, with the newly generated registration number appended to the footer of each of the pages of the document. The registration numbering convention shall conform to the requirements given Reference Joint Appendix JA7.5.4.

JA7.6.3.2.4 Digital Signatures

The Data Registry shall apply the Registration Provider digital signature to compliance documents electronically signed by the registration signer and then append the Registration Provider's digital certificate containing their public key, when concluding the document registration procedure in the Data Registry.

JA7.6.3.2.4.1 When a compliance document is electronically signed by the registration signer, the Data Registry shall apply a visible indication of the Registration Provider's digital signature to the document which shall include the following statement: "This digital signature is provided in order to secure the content of this registered document, and in no way implies Registration Provider responsibility for the accuracy of the information".

JA7.6.3.2.4.1.1 The Data Registry digital signature software generates a hash number from the contents of the registered compliance document to create the message digest part of the digital signature.

JA7.6.3.2.4.1.2 The Data Registry digital signature software encrypts the message digest using the Registration Provider's digital signature private key to produce the digital signature.

JA7.6.3.2.4.1.3 The Data Registry digital signature software attaches the Registration Provider's digital certificate which contains their digital signature public key to the compliance document, displays the Registration Provider name and logo on each page of the document, and the digital signature's date and time stamp in the footer of each page of the compliance document.

JA7.6.3.2.5 Transmittal to Commission Compliance Document Repository

The Data Registry, upon completion of the registration procedure, shall immediately and automatically transmit a copy of the completed registered compliance document to the Commission Compliance Document Repository which will process the Registration Provider's digital signature using the Registration Provider's digital certificate to verify the sender and the compliance document contents.

JA7.6.3.2.5.1 The Data Registry shall transmit the digitally signed and registered compliance document to the Commission document repository using a secure transmission protocol. Detailed guidance for the secure transmission protocol may be specified in the Data Registry Requirements Manual.

JA7.6.3.2.6 Document Retention

The Registration Provider shall retain a copy of the completed registered compliance document and make the document available for use by authorized users of the registry who may print a hard copy, or access an electronic copy of the registered document and may subsequently process the Registration Provider's digital signature using their digital certificate to verify the sender and the compliance document contents.

JA7.6.3.2.6.1 The Data Registry shall provide users the functionality to either view registered documents in their web browser or save the document file to their desktop.

JA7.6.3.2.6.2 The Data Registry shall provide functionality to transmit registered compliance documents to authorized requesters.

JA7.6.3.2.6.3 The Data Registry shall make their digital signature public key available for all types of authorized access to these registered documents.

JA7.6.3.2.7 Receive and Process Output From Compliance Software or Other Software Tools

The Data Registry shall process the Compliance Registration Package transmitted from compliance software tools or other software tools approved by the Commission for use in compliance document registration processes.

JA7.6.3.2.7.1 The Data Registry shall have functionality to receive data containing electronic documents and data exported from compliance software tools or other software tools approved by the Commission. When data is received using a password protected encrypted file, the file password shall be made available to the Data Registry by the software vendor in a separate secure communication. Additional guidance may be provided in the Data Registry Requirements Manual. The passwords for encrypted data files shall not be made available to the software users or the Data Registry authorized users, or others who do not have the authority to administer the security measures for the compliance software or the registries.

There may be alternate means by which Compliance Software tools or other software tools approved by the Commission could communicate with Data Registries such as by a Web Service application that may not use encrypted data files, but rather data streaming. Use of such alternate means shall not be allowed unless approved by the Commission.

JA7.6.3.2.7.2 The Data Registry shall have functionality to decrypt data files it receives that contain completed compliance documents exported from compliance software tools or other software tools approved by the Commission using the password provided by the software vendor. If the password successfully decrypts the file, the Data Registry shall add the compliance document to the registry. Additional guidance describing methods for decrypting data files will be given in the Data Registry Requirements Manual. If the password fails to decrypt the transmitted file, the Data Registry shall display an error message to that effect, and flag any other applicable corrective actions as may be described in the Data Registry Requirements Manual.

JA7.6.3.2.7.3 The Data Registry shall only allow the transmission of data between compliance software tools or other software tools approved by the Commission using secure data transfer protocols. Detailed guidance for secure data transfer protocols may be given in the Data Registry Requirements Manual.

JA7.7 Data Exchange Requirements

Compliance documents are based on standardized data structures that define the content and layout contained for the standard reports that are required by the Administrative Regulations (Title 24, Part 1, §10-103). These data structures will be represented using XML, a well established public data exchange standard developed by the World Wide Web Consortium. All software that generates data used for producing compliance documents, including Data Registries that provide software interfaces for both keyed data entry or data transmission from external systems, will be required to use this technology. Specifically, the data that represents the content in compliance documents will be expressed as XML data which is validated against an XML schema that shall be approved by the Energy Commission. The XML schema will standardize the organization of the data and the terminology and data types, which will strengthen data integrity and provide built-in data validation. As an industry standard for data exchange, using XML technology will take advantage of support from numerous XML read and write software tools that are available in all major development environments.

The compliance document images rendered from the data in the XML document shall be consistent with the informational content and graphical layout formatting for the compliance documents approved by the Commission.

Detailed Guidance for use of the data definitions defined in the XML schema, and data formats used to render each of the registered compliance documents utilized for data exchange procedures for the compliance documents shall be provided in the Data Registry Requirements Manual. Consideration shall be given to use of two complimentary XML technologies, Extensible Stylesheet Language Transformation (XSLT) and Extensible Stylesheet Language Formatting Objects (XSL-FO) which would work directly with the data in the Compliance Data Exchange File to transform the data into the required graphical layout for the compliance document.

Data registries shall provide web-based services to authorized users to enable data exchange between the Data Registry and the authorized user's computer system(s).

Data exchange transactions used for Data Registry document registration processes shall be transactions that utilize technology or software that has been approved by the Commission in accordance with Section JA7.8 or JA7.9 as applicable. Use of technology or software that has not been approved by the Commission shall not be allowed.

JA7.7.1 Data Exchange Requirements for Document Registration

JA7.7.1.1 Keyed-in Data Entry

Data Registries shall have the capability to receive data input transmitted from an authorized user's computer system keyboard entry devices and pointing devices when the authorized user has logged on to the Data Registry web service.

JA7.7.1.2 Imports from Software Tools External to a Data Registry

For document registration procedures that require electronic data or image files be transmitted to a Data Registry, the electronic data or image file transmittals shall conform to the data exchange requirements specified by Section JA7.7.

Any software tool that utilizes data transmission to a Data Registry for purposes of document registration in a Data Registry shall be a Compliance Software tool approved by the Commission pursuant to all applicable requirements in Title 24 Part 1, Section 10-109, or shall be approved for use in accordance with all applicable requirements in Section JA7.9.

JA7.7.1.3 Image File Format for Document Registration

Image files transmitted to a Data Registry from a compliance report generator as part of document registration procedures shall be non-editable "flat" image files in pdf format. Registered document images produced by a Data Registry shall be non-editable "flat" image files in pdf format. The pdf image shall not be recreated from data every time a user wishes to view the registered document. The image shall be generated only once, and stored as a "non-editable" image file.

JA7.7.1.4 Export to Commission Compliance Document Repository

Contingent upon approval of a document repository by the Commission, upon conclusion of the registration of a document, the Data Registry shall immediately and automatically export a copy of the registered compliance document to the Commission Document Repository. The export shall conform to the specifications for data exchange described in JA7.7 and consist of an XML file which is validated against an XML schema. The xml schema shall be approved by the Energy Commission. Detailed guidance for data and document exports to the document repository may be included in the Data Registry Requirements Manual.

Exports to the Commission Compliance Document Repository shall contain the data represented on the registered compliance document, and the Registration Provider's digitally signed image file that represents the completed registered compliance document.

JA7.7.1.5 Electronic Copies of Registered Compliance Documents for Submittals

Registered document files retained by a Data Registry shall be made available to authorized users of the Data Registry for download for use for electronic submittals. These electronic copies of the registered compliance documents shall have the Registration Provider's digital signature which provides for automatic electronic verification of the authenticity of the document. Refer to Section JA7.5.5 for more information about automatic verification of document authenticity using digital certificates.

JA7.8 Data Registry Approval

This section explains the requirements for approval of Data Registries that provide services to authorized users for creating and registering documents required for compliance with Part 6.

The Commission shall perform acceptance testing of Data Registries when a Registration Provider applicant submits an application in order to determine if the requirements in Reference Joint Appendix JA7 have been met.

Detailed guidance for approval of data registries may be provided in the Data Registry Requirements Manual.

JA7.8.1 Overview

The approval procedure requires self-testing and self-certification by the Registration Provider applicant. The Registration Provider applicant shall conduct the specified tests, evaluate the results and certify in writing that the Data Registry passes the tests. The Commission shall perform spot checks and may require additional tests to verify that the proposed Data Registry is suitable for use for providing the compliance document registration functionality required by the Standards. The Registration Provider shall develop a user manual or online help screens that explain how to perform the document registration procedures offered by the Data Registry. The user manual or online help screens shall be reviewed by the Commission for accuracy and ease of use.

JA7.8.2 Application Checklist

Application for approval shall conform to all applicable requirements given in Standards Section 10-109. The following is a list of the items that shall be included in an application package:

JA7.8.2.1 Registration Provider Applicant Certification Statement.

A statement from the Registration Provider applicant certifying the reliability and accuracy of the Data Registry when used for registration of Compliance Documents in accordance with the requirements of Standards Section 10-103(a), Reference Joint Appendix JA7, and may reference the guidance given in the Data Registry Requirements Manual.

The template for the Registration Provider Certification Statement document may be published in the Data Registry Requirements Manual, and electronic versions of the Registration Provider Certification Statement template shall be made available to Registration Provider applicant upon request.

JA7.8.2.2 Compliance Document Registration Test Results.

Electronic copies of the results of the data exchange verification tests, and electronic copies of the registered documents that result from the document registration tests shall be provided. Detailed guidance to assist the applicant in performing and reporting the standardized tests may be given in the Data Registry Requirements Manual.

JA7.8.2.3 User Manual

A copy of the user manual for the Data Registry shall be provided in an electronic format that can be utilized by word processing software. Help screens from the Data Registry user interface, organized into an electronic document file with a table of contents is an acceptable alternative to the requirement for a user manual.

JA7.8.2.4 Data Registry Authorized User Account Access.

User name and password information shall be provided to allow access to the Data Registry for Commission staff to perform verification of Data Registry functionality.

The Registration Provider's digital signature public key shall be provided in order that their digital signature on registered documents can be tested.

JA7.8.2.5 Application Fee and Other Administrative Requirements

Refer to Standards Section 10-109 for required application fees and additional administrative requirements applicable to approval of data registries.

JA7.8.3 Types of Approval

There are two Data Registry approval procedures: full approval, and amendment to full approval. Full approval is required for all Data Registry changes unless they qualify for the amendment to full approval procedure.

JA7.8.3.1 Full Approval

Full approval is required when an applicant Data Registry service has not previously been approved by the Commission. Additionally, the Commission may require that all Data Registries conform to the requirements of a full approval procedure when the Standards are updated (re-approval), or whenever substantial changes are made to a Data Registry's functionality, security, or technology features. When Data Registry re-approval is mandated by the Commission, all Registration Providers shall be notified of the re-approval timetable. A revised Data Registry Requirements Manual may be published to provide guidance for the re-approval process.

Full approval shall ensure the Data Registry conforms to all applicable requirements for functionality and security in JA7 including but not limited to:

(a) Capability to produce and manage registered documents (JA7.5).

(b) Electronic signature capability, and manage authorization of users (JA7.6.3.2.1).

(c) Document data validation (JA7.6.3.2.2).

(d) Signer review and signature actions (JA7.6.3.2.3).

(e) Digital signature and digital certificate actions (JA7.6.3.2.4).

(f) Capability to transmit secured documents and data to the Commission Compliance Document Repository (JA7.6.3.2.5).

(g) Document retention capability (JA7.6.3.2.6).

(h) Capability to receive and process secured output files from compliance software and other software tools approved for use for registering compliance documents (JA7.6.3.2.7).

(i) Capability for data exchange with compliance report generation services approved by the Commission to generate formatted electronic documents (JA7.7).

Detailed guidance to assist with approval procedures may be given in the Data Registry Requirements Manual.

JA7.8.3.2 Amendments

Certain types of changes to Data Registry software applications may be made through a streamlined amendment process. Changes that qualify for amendment approval are changes for which there are minor changes to the document registration procedures, data input requirements, or registered documentation output for the Data Registry. When Data Registry modifications qualify for amendment approval, the following procedure shall be followed:

(a) The Registration Provider applicant shall notify the Commission in writing to provide a description of the change and the reason for making the change.

(b) The Registration Provider applicant shall prepare an addendum to the user manual describing the change to the Data Registry if applicable.

(c) The Commission shall respond to the Registration Provider applicant within 45 days. The Commission response to the applicant may:

1. approve the modification;
2. request additional information;
3. refuse to approve the modification;
4. require the Registration Provider to submit results of additional acceptance tests applicable to the modification; or
5. require that the Registration Provider make specific changes to either the User Manual addendum or the Data Registry functionality.

The Registration Provider shall submit results of any required validation tests applicable to the modification. It is not necessary to resubmit Data Registry test results previously submitted that remain valid.

Any amendment to an existing Data Registry approval shall be accompanied by a cover letter explaining the type of amendment requested, and copies of any other applicable documents that are required. All items on the application checklist shall be submitted, when applicable. The timetable for approval of amendments is the same as for full approval.

(d) With Commission approval, the Registration Provider may make the modified Data Registry available for use for registration of compliance documentation, along with the modified user manual or addendum to the user manual, and shall notify authorized users of the Data Registry.

JA7.8.4 Rescinding Approval (Deactivation) of Data Registries

The Commission may rescind approval of Data Registries through various means.

JA7.8.4.1 Procedures that Initiate Deactivation

(a) All Data Registries are deactivated when the Standards undergo substantial changes, usually occurring with each Standards update. However, the Data Registry shall remain approved to provide document registration for projects that have been permitted under the prior versions of the Standards.

(b) Any Data Registry can be deactivated by a letter from the Registration Provider requesting that the Data Registry be deactivated. The deactivation request shall briefly describe the reasons that justify the need for deactivation.

(c) Any "initiating party" may commence a procedure to deactivate a Data Registry according to the steps outlined below. The intent is to provide a means whereby serious Data Registry errors, flawed numeric results, improper registered document output not discovered in the Data Registry approval process can be verified, and a corrective course of action determined. In this process, there is ample opportunity for the Commission, the Registration Provider, and all interested parties to evaluate any alleged errors in the Data Registry functionality.

JA7.8.4.2 Challenging a Data Registry and Initiating Deactivation

A description of the process for challenging a Data Registry or initiating a deactivation procedure follows:

(a) Any party may initiate a review of a Data Registry approval by sending a written communication to the Commission's Executive Director. (The Commission may be the initiating party for this type of review by noticing the availability of the same information listed here.) The initiating party shall:

1. State the name of the Data Registry that contains the alleged errors;

2. Identify concisely the nature of the alleged errors in the Data Registry that require review;

3. Explain why the alleged errors are serious enough in their effect on document registration compliance to justify a deactivation procedure; and

4. Include appropriate data electronically (in a format agreed to by the Commission staff) and/or information sufficient to evaluate the alleged errors.

(b) The Executive Director shall make a copy or copies of the initial written communication available to the Registration Provider and interested parties within 30 days. Comments from interested parties shall be received within 60 days of the acceptance of the original application.

(c) Within 75 days of receipt of the written communication, the Executive Director may request any additional information needed to evaluate the alleged Data Registry errors from the party who initiated the deactivation review process. If the additional information is incomplete, this procedure will be delayed until the initiating party submits complete information.

(d) Within 75 days of receipt of the initial written communication, the Executive Director may convene a workshop to gather additional information from the initiating party, the Registration Provider and interested parties. All parties will have 15 days after the workshop to submit additional information regarding the alleged program errors.

(e) Within 90 days after the Executive Director receives the application or within 30 days after receipt of complete additional information requested of the initiating party, whichever is later, the Executive Director shall either:

1. Determine that the Data Registry need not be deactivated; or

2. Submit to the Commission a written recommendation that the Data Registry be deactivated.

(f) If the Commission approves the Data Registry deactivation, it shall take effect 60 days later. During the first 30 days of the 60 day period, the Executive Director shall send out a Notice to Enforcement Agencies and Interested Parties announcing the deactivation.

JA7.8.4.3 Burden of Proof

All initiating parties have the burden of proof to establish that the review of alleged Data Registry errors should be granted. The deactivation process may be terminated at any time by mutual written consent of the initiating party and the Executive Director.

The Registration Provider may use the 180 to 210-day period outlined here to update the Data Registry, get it re-approved by the Commission, and make available for use by authorized users, the revised version of the Data Registry that does not contain the errors initially brought to the attention of the Commission.

JA7.8.5 Data Registry User Manual

Each Registration Provider is required to publish a Data Registry User Manual. This requirement may be met with help screens incorporated into the Data Registry user interface, however, a printed version which includes all help screen items must be submitted with the application. The Data Registry User Manual provides guidance for building permit applicants and enforcement agency officials to enable correct use of the Data Registry, and assists with preparation of registered documentation used for submittals to enforcement agencies and other parties to the construction project.

The Document Registration Manual shall describe the specific Data Registry procedures for completing registered compliance documents. The manual shall provide instructions for preparing the data input and utilizing the registered documents for submittals. An example of a full set of compliance documents for a building project shall be included.

Data Registry User Manuals shall be written in a clear and concise manner and with an organization and format that will allow users to quickly locate the topic and understand the instructions. Also, Registration

Providers shall make electronic copies of their user manual available from their Data Registry website to all building departments in California.

The following sections describe the information that shall be included in all Data Registry User Manuals. It also presents the required organization for that information.

JA7.8.5.1 Energy Commission Approval

This section includes a copy of the official Energy Commission notice of approval of the Data Registry. It shall include the date of approval, and may include an expiration date for approval as well. The Energy Commission will provide this notice upon completion of evaluation and approval of the Data Registry service.

JA7.8.5.2 Data Registry Capabilities

This section shall discuss the Data Registry capabilities, providing explanation of how to access these capabilities, and the purpose for each of these features. Reference may be made to sections of the Data Registry Users Manual for more complete description.

JA7.8.5.3 Preparing Basic Documents

This section shall cover the basic use of the Data Registries to prepare each of the basic Compliance Document types. Reference may be made to the users' manual, but this section should include a complete summary of all document creation methods or commands necessary to complete the required registered documents.

JA7.8.5.4 Instruction for Submittal of the Registered Document(s)

This section shall contain instruction for completing submittals of completed registered documents to enforcement agencies or other persons who require copies of completed registered documents. Instruction shall be given for all methods of submittal the Data Registry supports, including various methods for submittal of electronic copies of the registered documents, as well as for printing of paper copies

JA7.8.5.5 Sample Compliance Documentation

This section shall include an example of a complete set of compliance documentation for a sample building. The building need not be overly complex, nor need it include every document type possible. The example should, however, include example documentation for all Compliance document types that would normally be submitted for any occupancy types administered by the Data Registry.

JA7.9 Approval of Software Used for Data Input to Data Registries

This section explains the requirements for approval of software used for data input to data registries for creating and registering documents required for compliance with Part 6.

The Commission shall perform acceptance testing of software when a software vendor applicant submits an application in order to determine if the applicable requirements in Reference Joint Appendix JA7 have been met.

Detailed guidance for approval of software may be provided in the Data Registry Requirements Manual.

Note: JA7.9 does not apply to approval of compliance software used for the performance method for demonstrating compliance with Part 6.

JA7.9.1 Overview

The approval procedure requires self-testing and self-certification by the software vendor applicant. The software vendor applicant shall conduct the specified tests, evaluate the results and certify in writing that the software passes the tests. The Commission shall perform spot checks and may require additional tests to verify that the proposed software is suitable for use for providing the data input for completion of the compliance documents as required by the Standards. The software vendor shall develop a user manual or online help screens that explain how to perform the data input procedures offered by the software. The user manual or online help screens shall be reviewed by the Commission for accuracy and ease of use.

JA7.9.2 Application Checklist

Application for approval shall conform to all applicable requirements given in Standards Section 10-109. The following is a list of the items that shall be included in an application package:

JA7.9.2.1 Software Vendor Applicant Certification Statement.

A statement from the software vendor applicant certifying the reliability and accuracy of the software when used for data input to Data Registries for creating and registering compliance documents in accordance with the requirements of Reference Joint Appendix JA7, and may reference the guidance given in the Data Registry Requirements Manual.

The template for the Software Vendor Certification Statement document may be published in the Data Registry Requirements Manual, and electronic versions of the Software Vendor Certification Statement template shall be made available to Software Vendor applicant upon request.

JA7.9.2.2 Compliance Document Registration Test Results.

Electronic copies of the results of the data exchange verification tests, and electronic copies of the registered documents that result from the compliance report generator tests shall be provided.

Detailed guidance to assist the applicant in performing and reporting the standardized tests may be given in the Data Registry Requirements Manual.

JA7.9.2.3 User Manual

A copy of the user manual for the software shall be provided in an electronic format that can be utilized by word processing software. Help screens from the software user interface, organized into an electronic document file with a table of contents is an acceptable alternative to the requirement for a user manual.

JA7.9.2.4 Application Fee and Other Administrative Requirements

Refer to Standards Section 10-109 for required application fees and additional administrative requirements applicable to approval of software used with data registries.

JA7.9.3 Types of Approval

There are two software approval procedures: full approval, and amendment to full approval. Full approval is required for all software changes unless they qualify for the amendment to full approval procedure.

JA7.9.3.1 Full Approval

Full approval is required when an applicant software service has not previously been approved by the Commission. Additionally, the Commission may require that all approved data input software tools conform to the requirements of a full approval procedure when the Standards are updated (re-approval), or whenever substantial changes are made to a software's functionality, security, or technology features. When software re-approval is mandated by the Commission, all software vendors shall be notified of the re-

approval timetable. A revised Data Registry Requirements Manual may be published to provide guidance for the re-approval process.

Full approval shall ensure the software conforms to all applicable requirements for functionality and security in JA7 including but not limited to:

(a) Document data validation (JA7.6.3.2.2)

(b) Capability for data exchange with compliance report generation services approved by the Commission to generate formatted electronic documents (JA7.7),

Detailed guidance to assist with approval procedures may be given in the Data Registry Requirements Manual.

JA7.9.3.2 Amendments

Certain types of changes to software applications may be made through a streamlined amendment process. Changes that qualify for amendment approval are changes for which there are minor changes to the document registration procedures, data input requirements, or documentation output for the software. When software modifications qualify for amendment approval, the following procedure shall be followed:

(a) The software vendor applicant shall notify the Commission in writing to provide a description of the change and the reason for making the change.

(b) The software vendor applicant shall prepare an addendum to the user manual describing the change to the software if applicable.

(c) The Commission shall respond to the software vendor applicant within 45 days. The Commission response to the applicant may:

1. approve the modification;
2. request additional information;
3. refuse to approve the modification;
4. require the software vendor to submit results of additional acceptance tests applicable to the modification; or
5. require that the software vendor make specific changes to either the User Manual addendum or the software functionality.

The software vendor shall submit results of any required validation tests applicable to the modification. It is not necessary to resubmit software test results previously submitted that remain valid.

Any amendment to an existing software approval shall be accompanied by a cover letter explaining the type of amendment requested, and copies of any other applicable documents that are required. All items on the application checklist shall be submitted, when applicable. The timetable for approval of amendments is the same as for full approval.

(d) With Commission approval, the software vendor may make the modified software available for use for registration of compliance documentation, along with the modified user manual or addendum to the user manual, and shall notify authorized users of the software.

JA7.9.4 Rescinding Approval (Deactivation) of Software

The Commission may rescind approval of software through various means.

JA7.9.4.1 Procedures that Initiate Deactivation

(a) All software is deactivated when the Standards undergo substantial changes, usually occurring with each Standards update. However, the software shall remain approved to provide data input to Data Registries for creating and registering compliance documents for projects that have been permitted under the prior versions of the Standards.

(b) Any software can be deactivated by a letter from the software vendor requesting that the software be deactivated. The deactivation request shall briefly describe the reasons that justify the need for deactivation.

(c) Any "initiating party" may commence a procedure to deactivate a software tool according to the steps outlined below. The intent is to provide a means whereby serious software errors, flawed numeric results, improper document output not discovered in the software approval process can be verified, and a corrective course of action determined. In this process, there is ample opportunity for the Commission, the software vendor, and all interested parties to evaluate any alleged errors in the software functionality.

JA7.9.4.2 Challenging a Software Tool and Initiating Deactivation

A description of the process for challenging a software tool or initiating a deactivation procedure follows:

(a) Any party may initiate a review of a software tool approval by sending a written communication to the Commission's Executive Director. (The Commission may be the initiating party for this type of review by noticing the availability of the same information listed here.) The initiating party shall:

1. State the name of the software that contains the alleged errors;

2. Identify concisely the nature of the alleged errors in the software that require review;

3. Explain why the alleged errors are serious enough in their effect on document registration compliance to justify a deactivation procedure; and

4. Include appropriate data electronically (in a format agreed to by the Commission staff) and/or information sufficient to evaluate the alleged errors.

(b) The Executive Director shall make a copy or copies of the initial written communication available to the software vendor and interested parties within 30 days. Comments from interested parties shall be received within 60 days of the acceptance of the original application.

(c) Within 75 days of receipt of the written communication, the Executive Director may request any additional information needed to evaluate the alleged software errors from the party who initiated the deactivation review process. If the additional information is incomplete, this procedure will be delayed until the initiating party submits complete information.

(d) Within 75 days of receipt of the initial written communication, the Executive Director may convene a workshop to gather additional information from the initiating party, the software vendor and interested parties. All parties will have 15 days after the workshop to submit additional information regarding the alleged program errors.

(e) Within 90 days after the Executive Director receives the application or within 30 days after receipt of complete additional information requested of the initiating party, whichever is later, the Executive Director shall either:

1. Determine that the software need not be deactivated; or

2. Submit to the Commission a written recommendation that the software be deactivated.

(f) If the Commission approves the software deactivation, it shall take effect 60 days later. During the first 30 days of the 60 day period, the Executive Director shall send out a Notice to Data Registries, Enforcement Agencies, and other Interested Parties announcing the deactivation.

JA7.9.4.3 Burden of Proof

All initiating parties have the burden of proof to establish that the review of alleged software errors should be granted. The deactivation process may be terminated at any time by mutual written consent of the initiating party and the Executive Director.

The software vendor may use the 180 to 210-day period outlined here to update the software, get it re-approved by the Commission, and make available for use by authorized users, the revised version of the software that does not contain the errors initially brought to the attention of the Commission.

JA7.9.5 Software User Manual

Each software vendor is required to publish a Software User Manual. This requirement may be met with help screens incorporated into the software user interface, however, a printed version which includes all help screen items must be submitted with the application. The Software User Manual provides guidance for building permit applicants and enforcement agency officials to enable correct use of the software, and assists with preparation of registered documentation used for submittals to enforcement agencies and other parties to the construction project.

The Software User Manual shall describe the specific software procedures for completing compliance documents for use for registration. The manual shall provide instructions for preparing the data input and utilizing the completed formatted documents for registration.

Software User Manuals shall be written in a clear and concise manner and with an organization and format that will allow users to quickly locate the topic and understand the instructions. Also, software vendor shall make electronic copies of their user manual available from their Software product website to all building departments in California.

The following sections describe the information that shall be included in all software user manuals. It also presents the required organization for that information.

JA7.9.5.1 Energy Commission Approval

This section includes a copy of the official Energy Commission notice of approval of the software tool. It shall include the date of approval, and may include an expiration date for approval as well. The Energy Commission will provide this notice upon completion of evaluation and approval of the software tool.

JA7.9.5.2 Software Capabilities

This section shall discuss the software capabilities, providing explanation of how to access these capabilities, and the purpose for each of these features.

JA7.9.5.3 Preparing Basic Documents

This section shall cover the basic use of the software to prepare each of the applicable Compliance Document types. Reference may be made to the users' manual, but this section should include a complete summary of all document creation methods or commands necessary to complete the required compliance documents.

JA7.9.5.4 Sample Compliance Documentation

This section shall include an example of the applicable compliance documentation for a sample building. The building need not be overly complex, but the example should, however, include example documentation for all Compliance document types that would normally be submitted for any occupancy types administered by the Data Registry.

JA7.10 Related Publications

The Compliance Supplement should refer users to the following related Energy Commission publications and where to obtain them:

(a) ~~2013~~2016 Building Energy Efficiency Standards (publication number unknown at time of printing)

(b) ~~2013~~2016 Joint Appendices (publication number unknown at time of printing)

(c) ~~2013~~2016 ACM Approval Manual (publication number unknown at time of printing)

(d) ~~2013~~2016 Residential Compliance Manual (publication number unknown at time of printing)

(e) ~~2013~~2016 Nonresidential Compliance Manual (publication number unknown at time of printing)

(f) ~~2013~~2016 Data Registry Requirements Manual (publication number unknown at time of printing)

(g) ~~2013~~2016 ACM Reference Manual (publication number unknown at time of printing)

These publications are available from:

California Energy Commission
Publications Unit
1516 Ninth Street
Sacramento CA 95814
(916) 654-5200

(This page intentionally left blank.)

Joint Appendix JA8

Appendix JA8 – Qualification Requirements for Residential Luminaires Using LED Light Source

~~To qualify as a residential high efficacy luminaire using Light Emitting Diode (LED) as the light source (as defined in IES LM-80-2008), the LED light engine (as defined in ANSI/IES RP-16-2010) used in the luminaire shall be certified to the Energy Commission according to all of the following requirements, or by a method approved by the Executive Director. If the LED light engine is inseparable from the luminaire (integral LED luminaire) then the entire luminaire shall meet the same requirements. LED light engine(s) and integral LED luminaire(s) are referred to as LED luminaire(s) below.~~

~~(a) Shall be manufactured for use in residential applications. LED luminaires not intended for use in residential applications, LED landscape luminaires, and luminaire housings not containing a light engine shall not be certified to the Energy Commission for the purpose of complying with Joint Appendix JA-8.~~

~~(b) The efficacy of the integral LED luminaire or LED light engine, when tested in accordance with IES LM-79-2008, shall be equal to or greater than the efficacies contained in TABLE JA-8.~~

~~(c) When designed or rated for indoor use shall be capable of providing a nominal Correlated Color Temperature (CCT) that includes at least one point within the range of 2700K to 4000K; when designed or rated for outdoor use shall be capable of providing a nominal CCT that includes at least one point within the range of 2700K to 5000K; with tolerance defined as in ANSI C78-377-2008.~~

~~**Exception to Section (c):** Monochromatic LEDs that are only for decorative purposes~~

~~(d) Shall be capable of providing a minimum Color Rendering Index (CRI) of 90.~~

~~**Exception to Section (d):** Monochromatic LEDs that are only for decorative purposes~~

~~(e) An LED light engine shall be capable of being installed in luminaire housing without using any type of base or socket used for incandescent lamps; it may include a GU-24 or modular quick connect, but shall not include screw base sockets or adaptors of type and size E12 through E39.~~

~~(f) An LED lamp, integrated or non-integrated type in accordance with the definition in ANSI/IES RP-16-2010, shall not be certified to the Energy Commission as a high efficacy luminaire or high efficacy light engine, and shall not be classified as a high efficacy luminaire for compliance with Title 24, Part 6 of the CCR.~~

~~(g) The integral LED luminaire or LED light engine under test shall be tested in a Underwriters Laboratory (UL) 1598 testing apparatus in a testing laboratory participating in the ISO/IEC 17025, by the National Voluntary Laboratory Accreditation Program (NVLAP) or other laboratory accreditation body operating in accordance with ISO/IEC 17011 and produced under an ongoing inspection program carried out by a Type A inspection body in accordance with ISO/IEC 17020, accredited to ISO/IEC 17020 by an accreditation body operating in accordance with ISO/IEC 17011.~~

~~(h) Each integral LED luminaire or LED light engine tested shall produce the same quantity and quality of light. An integral LED luminaire or LED light engine under test producing different Correlated Color Temperature (CCT), Color Rendering Index (CRI), total flux (per linear foot for linear systems) or other quantitative and qualitative differences in light shall be separately tested and separately certified to the Energy Commission.~~

~~(i) A worst case test may be used to certify a group of integral LED luminaires or LED light engines having the same quantity and quality of light in accordance with section (h).~~

~~(j) For determining efficacy, the input wattage of the integral LED luminaire or LED light engine under test shall be determined as follows:~~

~~1. For single LED luminaires, use the maximum rated input wattage of the luminaire.~~

~~2. When multiple LED light engines are connected to a single power supply, all possible combinations shall be tested to determine the various input wattages and efficacies for the power supply under test. The combination providing the worst case efficacy shall be the system efficacy.~~

~~3. LED luminaires, installed on lighting track that is capable of being used with multiple lighting technologies, shall be treated as single LED luminaires in accordance with section (j)1. Lighting track capable of accommodating any non-LED lighting technologies shall not be certified as LED lighting.~~

~~(k) For single LED luminaires, maximum rated input wattage, total luminous flux, CCT, and CRI of the integral LED luminaire or LED light engine under test shall be listed on a permanent, pre-printed, factory-installed label on the circuit board, light engine, or luminaire housing.~~

~~(l) For LED systems in accordance with section (j)2, all possible wattage combinations, luminous flux, CCT, CRI, and efficacies of each of possible combination of the integral LED luminaire or LED light engine under test shall be listed on a permanent, pre-printed, factory-installed label on the power supply, or published in manufacturer's catalogs.~~

~~TABLE JA-8 HIGH EFFICACY QUALIFICATION REQUIRMENTS FOR LUMINAIRES OR LIGHT ENGINES USING LED LIGHT SOURCES~~

~~Power Rating per Integral LED Luminaire, or per LED Light Engine Under Test~~	~~Minimum Efficacy (Lumens Per Watt)~~
~~5 watts or less~~	~~30~~
~~over 5 watts to 15 watts~~	~~45~~
~~over 15 watts to 40 watts~~	~~60~~
~~over 40 watts~~	~~90~~

JA8.1 Purpose and Scope

Joint Appendix JA8 provides the qualification requirements for high efficacy light sources installed to comply with Section 150.0(k).

JA8.2 Certification of Test Apparatus and Test Labs

The light source under test shall be tested in a Underwriters Laboratory (UL) 1598 testing apparatus in a testing laboratory participating in the ISO/IEC 17025, by the National Voluntary Laboratory Accreditation Program (NVLAP) or other laboratory accreditation body operating in accordance with ISO/IEC 17011 and produced under an ongoing inspection program carried out by a Type A inspection body in accordance with ISO/IEC 17020, accredited to ISO/IEC 17020 by an accreditation body operating in accordance with ISO/IEC 17011.

JA 8.3 Tests to be performed

Compliance with the requirements of this Appendix shall be determined by performance of the following test procedures, as applicable to the type of light source.

JA 8.3.1 Efficacy Test

Efficacy shall be determined by the following test procedures, as applicable to the type of light source:

a) For incandescent and incandescent reflector lamps: 10CFR 430.23(r).
b) For medium base compact fluorescent lamps: 10CFR 430.23(w).

c) For general service fluorescent lamps: 10CFR 430.23(r).
d) For fluorescent lamps that are not Medium base compact fluorescent lamps and general service fluorescent lamps: IES LM-9.
e) For LED light sources, IES LM-79.
f) For high intensity discharge lamps, IES LM-51.
g) For induction lamps, IES LM-79.

JA 8.3.2 Power Factor Test

Power factor shall be measured in accordance with ANSI C82.77, Section 6 and 7. Sample size shall be 10 units per model; 5 units tested base-up and 5 units tested base-down unless the manufacturer restricts specific use and or position. If position is restricted, all units shall be tested in restricted position. Test units, including low voltage lamps, shall be operated at rated voltage. The reported value shall be the average measured values of units tested rounded to be the nearest tenth.

JA 8.3.3 Start Time Test

Start time shall be measured in accordance with the ENERGY STAR Program Requirements Product Specifications for Lamps 1.1: Start Time Test Method, withstanding the scope of the test.

JA8.3.4 Ambient Temperature Life Test

The following light sources shall be tested in accordance with the ENERGY STAR Product Specification for Lamps Version 1.1: Ambient Temperature Life Testing, in an ambient temperature condition between 20°C and 35°C and satisfy the lumen maintenance and 6,000 hour survival rate criteria:

a) Omnidirectional lamps < 10 watts;
b) Omnidirectional lamps labeled “not for use in enclosed fixtures” on the lamp and lamp packaging;
c) Lamps labeled “not for use in recessed fixtures” on the lamp and lamp packaging; and
d) Light sources integral to the fixture.

Ten lighting products per model shall be tested with 5 units tested base-up and 5 units tested base-down unless the manufacturer restricts specific use or position. If position is restricted, all units shall be tested in restricted position.

If a luminaire with integral light source is designed to be recessed, the luminaire shall be ICAT (insulation contact air tight) rated in accordance with Section 150.0(k)1C and tested with sides and top of luminaire in direct contact of least 12" of R-38 fiberglass insulation.

JA8.3.5 Elevated Temperature Life Test

The following light sources shall be tested in accordance with the ENERGY STAR Product Specification for Lamps Version 1.1: Elevated Temperature Life Testing.

a) Omnidirectional light sources ≥ 10 Watts that are not labeled "not for use in enclosed luminaires" or "not for use in recessed luminaires"; and
b) All other light sources that are not labeled "not for use in enclosed luminaires" or "not for use in recessed luminaires."

The Option A test method ENERGY STAR Elevated Temperature Life Test shall be modified as follows: Light source shall be tested in an ICAT (insulation contact, air-tight) recessed luminaire of the appropriate size for the source under test. The ICAT luminaire shall be listed for zero clearance insulation contact (IC) by Underwriters Laboratories or other nationally recognized testing/rating laboratory and have a label that certifies that the luminaire is airtight with air leakage less than 2.0 CFM at 75 Pascals when tested in accordance with ASTM E283. The sides and top of ICAT recessed luminaire shall be in direct contact of least 12" of R-38 fiberglass insulation.

Light sources tested in accordance with the ENERGY STAR Elevated Temperature Life Test, notwithstanding scope, shall use the modified Option A test method as described above or Option B or C with an operating temperature of:

45degC +/-5degC for omnidirectional sources between 10 and 20 Watts;

45degC +/-5degC for all sources other than omnidirectional not greater than 20 Watts;

55degC +/-5degC for all sources greater than 20 Watts.

Ten lighting products per model shall be tested with 5 units tested base-up and 5 units tested base-down unless the manufacturer restricts specific use or position. If position is restricted, all units shall be tested in restricted position.

JA 8.3.6 Additional Tests for Dimming Light Sources

Dimming light sources shall perform the flicker test as specified in Joint Appendix JA10 and the noise test as specified in the ENERGY STAR Program Requirements Product Specification for Lamps Version 1.1: Noise Recommended Practices, notwithstanding scope.

JA 8.4 Qualification Requirements

The following qualification requirements must be met for the light source to be considered High Efficacy as specified in Section 150(k) and Table 150.0-A.

JA8.4.1 Luminous Efficacy

The luminous efficacy of the light source shall be equal to or greater than 45 lumens/Watt.

JA8.4.2 Power Factor

The light source shall have a power factor equal to or greater than 0.90 when operated at its full light output.

JA8.4.3 Start Time

The light source shall have a start time no greater than 0.5 seconds.

JA8.4.4 Color Temperature

The light source shall be capable of providing a nominal Correlated Color Temperature (CCT) that is 3000 Kelvin or less and within 0.0033 Duv of the black body locus in the 1976 CIE color space.

JA8.4.5 Color Rendering

The light source shall provide a Color Rendering Index (CRI) of 90 or higher and color rendering R9 value of 50 or higher.

EXCEPTION to JA8.6: Luminaires used for compliance with the outdoor lighting requirements in Section 150.0(k)3.

JA8.4.6 Dimming, Reduced Flickering and Noise Level

Dimming light sources shall meet the following requirements:

(a) The light source shall be dimmable down to 10 percent light output.

(b) LED-based light sources shall meet the requirements of NEMA standard SSL 7A as Type 1 or Type 2 products.

EXCEPTION to JA8.7(b): LED based light sources designed to be dimmed by controls other than phase cut dimmers.

(c) Light source shall not emit audible noise above 24dBA measured at 1 meter from the light source.

JA8.4.7 Lumen Maintenance and Rated Life

(a) Lumen Maintenance: The percentage of initial light output after the 6,000 hour test must be equal to or greater than 86.7 percent.

(b) Rated Life: The light source shall have a minimum rated lifetime of 15,000 hrs.

(c) Survival Rate: 90 percent of tested units shall be operational at the completion of the 6,000 hour life test.

JA8.4.8 Elevated Temperature and Ambient Temperature

The light source shall meet the lumen maintenance and 6000 hour survival rate criteria when measure in accordance with the test method of Section JA8.3.4 and JA8.3.5.

JA8.5 Marking

Maximum rated input wattage, total luminous flux, CCT, and CRI of the light source shall be listed on a permanent, factory-installed label on the light source, or light source housing. Product shall contain marking indicating "CA T-24 JA8 compliant". Product shall contain a marking that indicates the date of manufacture in the following format: "Date of Manuf: MM/YYYY".

JA8.6 Data Reporting

The following test data shall be submitted to the California Energy Commission in the format specified in Table JA-8.

TABLE JA-8. DATA SUBMITTED TO THE CALIFORNIA ENERGY COMMISSION FOR CERTIFICATION AS A CALIFORNIA HIGH QUALITY, HIGH EFFICACY LIGHT SOURCE

Required Information	Permissible Answers	Compliance Threshold
Manufacturer, Model number, Description		
Light Source Type	LED, OLED, Fluorescent, HID, Incandescent, Other	
GU-24 Base?	Yes/No	
Lamp type	Omnidirectional, Directional, Decorative, N/A	
Accredited NVLAP test lab?	Yes/No	Yes
Light Source Initial Efficacy	Number lm/W	≥ 45 lm/W
Power Factor at Full Rated Power	0 – 1 Fraction	≥ 0.90
Correlated Color Temperature (CCT)	Number Kelvin	If not GU-24, ≤ 3000 Kelvin. GU-24 base, any value

Required Information	Permissible Answers	Compliance Threshold
Color Rendering Index (CRI)	0-100	≥ 90
Color Rendering R9 (red)	0-100	≥ 50
Minimum dimming level	0-100%	≤ 10%
Duv	Number Duv	≥-0.0033 and ≤ +0.0033
Dimming control	Phase cut control, powerline carrier, digital, 0-10 VDC, other.	
NEMA SSL 7A compatible?	Yes/No	If powerline carrier, digital, 0-10 VDC, other. "Yes" or "No" If phase cut other control, "Yes"
Flicker: Amp. Mod. @freq≤200 Hz and 100% light output Amp. Mod. @freq≤200 Hz and 20% light output	 0-100% 0-100%	 ≤ 30% ≤ 30%
Noise in dBA 100% light output Noise in dBA 20% light output	Value dBA Value dBA	≤ 24 dBA ≤ 24 dBA
Start time	Value Seconds	≤ 0.3 sec
6,000 hour lumen maintenance	0-100%, N/A	≥ 86.7% or NA for sources complying w/ elevated temperature lumen maint
Rated life	Value Burning Hours	≥ 15,000 hours
3,000 hour survival rate	0-100%	≥ 90%
Manufacturer Warranty	Value Years	≥ 5 years
Light Output of Elev. Temp. Light Output Ratio Test	0-100%	If recessed/ enclosed fixture ≥ 90% Otherwise no requirement
Light Output of Elev. Temp. Life Test	0-100%	If recessed/ enclosed fixture:≥ 86.7% Otherwise no requirement
Marking		
Maximum rated input wattage	Yes/No	Yes
Full output luminous flux (lumens)	Yes/No	Yes
CCT	Yes/No	Yes
CRI	Yes/No	Yes

Required Information	Permissible Answers	Compliance Threshold
"CA T-24 JA-8 Compliant"	Yes/No	Yes
"Date of manuf" with date	Yes/No	Yes
"not for use in enclosed fixtures" "not for use in recessed fixtures"	Omnidirectional not passing elevated temp test All other not passing elevated temp test	

Joint Appendix JA9

Appendix JA9 – Qualification Requirements for Low Leakage Air-Handling Units

JA9.1 Purpose and Scope 1
JA9.2 Qualification Requirements 1
JA9.2.1 Method of Test 1
JA9.2.2 Testing Laboratory Requirements 1
JA9.2.3 Nominal Air-Handling Unit Airflow 2
JA9.2.4 Leakage Criterion for Qualification 2

JA9.1 Purpose and Scope

Joint Appendix JA9 provides the qualification requirements for air-handling units to meet the requirements for low leakage air-handling unit compliance credit(s) available in the performance standards set forth in Title 24, Part 6, Sections 150.1(b) and 140.1. Joint Appendix JA9 is applicable to air-handling units intended for installation in ducted forced-air space conditioning systems. Joint Appendix JA9 is applicable to air-handling units that are rated by the manufacturer to move less than 3,000 cfm (1400 L/s) of air.

Air-handling unit equipment types include:

(a) furnaces

(b) heat pumps

(c) air conditioners

Joint Appendix JA9 does not apply to coil boxes, filter boxes, or other duct system components that are not an integral part of the air-handling unit cabinet or enclosure certified by the manufacturer.

Joint Appendix JA9 does not apply to ducts, plenums, or other field-constructed components.

JA9.2 Qualification Requirements

To qualify as a low leakage air-handling unit for use for compliance with applicable performance compliance credits, the air-handling unit shall be certified to the Energy Commission according to the following requirements:

JA9.2.1 Method of Test

The air-handling unit shall be tested in accordance with the requirements given in ASHRAE Standard 193.

JA9.2.2 Testing Laboratory Requirements

The Air-Handling Unit shall be tested in a laboratory that has demonstrated compliance with ISO Standard 17025, General Criteria for the Competence of Testing and Calibration Laboratories, and is accredited for the ASHRAE Standard 193 test methods. The accreditation body shall be a signatory to the International Laboratory Accreditation Cooperation Mutual Recognition Arrangement (ILAC MRA) www.ilac.org.

JA9.2.3 Nominal Air-Handling Unit Airflow

The nominal air-handling unit airflow used for determining the leakage criterion for qualification shall be as follows:

(a) For heating-only systems the nominal air-handling unit airflow shall be 21.7 cfm per kBtu/hr of rated heating output capacity.

(b) For systems that provide space cooling, the nominal air-handling unit airflow shall be 400 cfm per nominal ton of cooling capacity as specified by the manufacturer, or the heating-only value, whichever is greater.

JA9.2.4 Leakage Criterion for Qualification

Allowable leakage for qualification as a Low Leakage Air-Handling Unit shall be equal to or less than 1.4 percent of the nominal air-handling unit airflow determined by Section JA9.2.3.

Appendix JA10 – Test Method for Measuring Flicker of Lighting Systems and Reporting Requirements

JA10.1 Introduction

This test method quantifies flicker from lighting systems which may include all of the following components: lamps, ballasts or drivers and dimming controls. This test method measures the fluctuation of light from lighting systems and processes this signal to quantify flicker as a percent amplitude modulation (percent flicker) above a given cut-off frequency (frequency above which the signal is filtered to remove high frequency components).

JA10.2 Equipment Combinations

Flicker measurements of a phase cut dimmer controlling an incandescent line voltage lamp shall be considered representative for that dimmer with any line voltage incandescent lamp.

Flicker measurements of a phase cut dimmer controlling a transformer for low voltage incandescent lamps shall be representative only for that combination of dimmer and transformer with any incandescent lamp.

Flicker measurements of all non-incandescent lamp sources controlled by a phase cut dimmer represents only the specific combination of phase cut dimmer, ballast or driver, and lamp. These results cannot be applied to other combinations of dimmer, ballast, driver or lamp.

Flicker measurements of light sources controlled by 0-10 volt control, digital control, wireless control or powerline carrier control, the flicker measurement is specific to that combination of control type and ballast or driver and lamp. Test results of the lamp and ballast or driver combination can be applied to other systems that have another control of the same type (0-10 volt, digital etc.) providing the control signal.

JA10.3 Test Equipment Requirements

Test Enclosure: The test enclosure does not admit stray light to ensure the light measured comes only from the UUT (unit under test). Provision shall be made so the test enclosure is able to maintain a constant temperature of 25°C ±5°C.

Photodetector: The photodetector fits the International Commission on Illumination (CIE) spectral luminous efficiency curve, V(λ)within 5% (f1'<5%). The linearity of response over the measurement range shall be less than 1%. The response time of the sensor shall be 10 microseconds or less.

Signal amplifier: If a signal amplifier is needed to increase the voltage to a range appropriate for the signal recording device, the bandwidth of the signal amplifier shall be at least 20 kHz for the amplification gain required to conduct the test.

Device for data collection: Digital oscilloscope with data storage capability or similar equipment able to store high frequency data from the photodetector, at a sample rate greater than or equal to 100 kHz for a minimum record rate of greater than or equal to 2 seconds (e.g. at least 200,000 samples at 100 kHz).

JA 10.4 Flicker Test Conditions

Product wiring setup: Fluorescent ballasts shall be wired in accordance to the guidelines provided in the DOE ballast luminous efficiency test procedure in 10 CFR 430.23(q).

Product pre-conditioning: All fluorescent lamps shall be seasoned (operated at full light output) at least 100 hours before initiation of the test. Seasoning of other lamps types is not required.

Input power: Input power to UUT (unit under test), shall be provided at the rated primary voltage and frequency within 0.5% for both voltage and frequency. When ballasts are labeled for a range of primary voltages, the ballasts should be operated at the primary application voltage. The voltage shall have a sinusoidal wave shape and have a voltage total harmonic distortion (THD) of no greater than 3%.

Temperature: Temperature shall be maintained at a constant temperature of 25°C ±5°C.

Dimming levels: Measurements shall be taken within 2% of the following increments of full light output: 100%, 80%, 50%, and 20%, where 100% full light output is defined as operating the light source at the maximum setting provided by the control. When the minimum light output of the systems is greater than 20% of full light output, then the flicker measurements are taken at the minimum light output. For dimming fluorescent ballasts, lamp arc power may be used as a proxy for light output for the purpose of setting dimming levels for collecting test measurements.

JA10.5 Test Procedure

Lamp stabilization: Lamp stabilization shall be determined in accordance with:

IES-LM9 for circleline, and U-tube fluorescent systems;

Code of Federal Regulations - 10 CFR 430.23(q) for linear fluorescent systems;

IES-LM66 for compact fluorescent systems;

IES_LM-79 for light emitting diode systems and

IES-LM-46 for high intensity discharge systems.

Lamp light output shall be stabilized in advance of taking measurements at each dimming level.

Recording interval: Measured data shall be recorded to a digital file with an interval between each measurement no greater than 0.00005 sec (50 microseconds) corresponding to an equipment measurement rate of no less than 20kHz.

Equipment measurement period: shall be greater than or equal to 2 seconds.

For each dimming level after the lamps have stabilized, record lighting measurements (in footcandles or volts) from test equipment with readings taken at intervals of no greater than 50 microseconds. These readings are compiled for an equipment period of no less than two seconds into a comma separated data file (*.csv).

JA 10.6 Calculations

Use CEC Flicker Data Analysis Tool to perform the following data manipulation and calculation tasks for each dimming level (100%, 80%, 50%, 20% or minimum dimming):

Calculate percent amplitude modulation (percent flicker) of unfiltered data over the duration of the test for a given dimming level using the following equation:

$$\text{Percent Amplitude Modulation} = \frac{(\text{Max} - \text{Min})}{(\text{Max} + \text{Min})} \times 100$$

Where,

Max is the maximum recorded light level or voltage from the test apparatus during the duration of the test for a given dimming level.

Min is the minimum recorded light level or voltage from the test apparatus during the duration of the test for a given dimming level.

Conduct a Fourier analysis to transform data for each dimming level into the frequency domain. Windowing procedures shall use at least one half of the data with no gaps or manipulation of the data within the window of data selected.

Filter frequency data to evaluate the data under four additional different conditions: frequencies under 40 Hz (data above 40 Hz is set to 0), and frequencies under 90 Hz, 200 Hz, 400 Hz and 1,000 Hz.

Perform inverse Fourier transform to place data back in time domain.

Calculate percent amplitude modulation on resulting time domain data for each filtered dataset over at least half of the full sampling duration (at least one second of filtered data in the time domain).

JA 10.7 Test Report and Data Format

For all systems where reporting of flicker is required, the test data shall be submitted to the California Energy Commission in the format specified in Table JA-10.

TABLE JA-10. FLICKER DATA TO BE RECORDED AND SUBMITTED TO THE CALIFORNIA ENERGY COMMISSION

Data	Units/Format
Test Date	2 comma separated data values: Date, and: mm/dd/yyyy
Test Operator	5 comma separated data values: Test Operator, and: Company, Contact Name, Phone Number, e-mail address
Entity submitting results	5 comma separated data values: Entity submitting results, and: Company, Contact Name, Phone Number, e-mail address
Product submitted for certification	5 comma separated data values: Product for certification, and: Product type (dimmer, ballast or driver, lamp etc.) manufacturer, model number, other description
Tested lighting system component: Dimmer	5 comma separated data values: Dimmer, and: Manufacturer, model number, other description (enter NA if not applicable)
Tested lighting system component: light source (lamp or light engine)	4 comma separated data values: Light source, and: Manufacturer, model number, other description
Tested lighting system component: Ballast or Driver	5 comma separated data values: Ballast or Driver, and: Manufacturer, model number, other description (enter NA if not applicable also applies to integral lamps)
Recording interval	sec (no greater than 0.00005 sec)
Equipment Measurement Period	sec (no less than 2 seconds)

TABLE JA-10. FLICKER DATA TO BE RECORDED AND SUBMITTED TO THE CALIFORNIA ENERGY COMMISSION	
Data	Units/Format
Fraction of rated light output integrated over measurement period at 100%, 80%, 50% and the greater of 20% or minimum fraction of light output.	4 comma separated data values: Fraction of rated light output integrated over measurement period at 100%, 80%, 50% and the greater of 20% or minimum fraction of light output.
Amplitude modulation separator	Text string: “Amplitude modulation: unfiltered, 1,000 Hz, 400 Hz, 200 Hz, 90 Hz, 40 Hz for the following fractions of full light output: 100%, 80%, 50% and the greater of 20% or minimum fraction of light output”
Amplitude modulation unfiltered	4 comma separated data values: calculated percent amplitude modulation unfiltered for each dimming level (100%, 80%, 50% and the greater of 20% or minimum fraction of light output)
Amplitude modulation with 1,000 Hz cut-off	4 comma separated data values: calculated percent amplitude modulation, data filtered with a 1,000 Hz cut-off frequency for each dimming level: (100%, 80%, 50% and the greater of 20% or minimum fraction of light output)
Amplitude modulation with 400 Hz cut-off	4 comma separated data values: calculated percent amplitude modulation, data filtered with a 400 Hz cut-off frequency for each dimming level: (100%, 80%, 50% and the greater of 20% or minimum fraction of light output)
Amplitude modulation with 200 Hz cut-off	4 comma separated data values: calculated percent amplitude modulation, data filtered with a 200 Hz cut-off frequency for each dimming level: (100%, 80%, 50% and the greater of 20% or minimum fraction of light output)
Amplitude modulation with 90 Hz cut-off	4 comma separated data values: calculated percent amplitude modulation, data filtered with a 90 Hz cut-off frequency for each dimming level: (100%, 80%, 50% and the greater of 20% or minimum fraction of light output)
Amplitude modulation with 40 Hz cut-off	4 comma separated data values: calculated percent amplitude modulation, data filtered with a 40 Hz cut-off frequency for each dimming level: (100%, 80%, 50% and the greater of 20% or minimum fraction of light output)
Raw data separator	Text string: “Unfiltered raw photometric data for the following fractions of full light output: 100%, 80%, 50% and the greater of 20% or minimum fraction of light output”
Raw Photometric Flicker Waveform (unfiltered) at 100%, 80%, 50% and the greater of 20% or minimum fraction of light output.	4 comma separated data values per row, with the number of rows being the number of data points taken during the test duration. Each row contains the measurement for the unit under test at the following dimmed conditions: 100%, 80%, 50% and the greater of 20% or minimum fraction of light output