ALNOR® ELECTRONIC BALANCING TOOL

MODELS EBT730/EBT731

OWNER'S MANUAL

P/N 6005725, REV F
APRIL 2016

Model EBT731 Balometer®
Air Balancing Instrument

Model EBT730 Micromanometer
(shown with standard and optional accessories)

START SEEING THE BENEFITS OF REGISTERING TODAY!

Thank you for your TSI instrument purchase. Occasionally, TSI releases information on software updates, product enhancements and new products. By registering your instrument, TSI will be able to send this important information to you.

http://register.tsi.com

As part of the registration process, you will be asked for your comments on TSI products and services. TSI's customer feedback program gives customers like you a way to tell us how we are doing.

UNDERSTANDING, ACCELERATED

TSI Incorporated - Visit our website **www.tsi.com** for more information.

USA	**Tel:** +1 800 874 2811	**India**	**Tel:** +91 80 67877200
UK	**Tel:** +44 149 4 459200	**China**	**Tel:** +86 10 8219 7688
France	**Tel:** +33 1 41 19 21 99	**Singapore**	**Tel:** +65 6595 6388
Germany	**Tel:** +49 241 523030		

©2015 TSI Incorporated

Printed in U.S.A.

LIMITATION OF WARRANTY AND LIABILITY

Copyright©
TSI Incorporated / 2012-2016 / All rights reserved.

LIMITATION OF WARRANTY AND LIABILITY (effective February 2015)

(For country-specific terms and conditions outside of the USA, please visit www.tsi.com.)

Seller warrants the goods, excluding software, sold hereunder, under normal use and service as described in the operator's manual, to be free from defects in workmanship and material for **24 months**, or if less, the length of time specified in the operator's manual, from the date of shipment to the customer. This warranty period is inclusive of any statutory warranty. This limited warranty is subject to the following exclusions and exceptions:

a. Hot-wire or hot-film sensors used with research anemometers, and certain other components when indicated in specifications, are warranted for 90 days from the date of shipment;

b. Pumps are warranted for hours of operation as set forth in product or operator's manuals;

c. Parts repaired or replaced as a result of repair services are warranted to be free from defects in workmanship and material, under normal use, for 90 days from the date of shipment;

d. Seller does not provide any warranty on finished goods manufactured by others or on any fuses, batteries or other consumable materials. Only the original manufacturer's warranty applies;

e. This warranty does not cover calibration requirements, and seller warrants only that the instrument or product is properly calibrated at the time of its manufacture. Instruments returned for calibration are not covered by this warranty;

f. This warranty is **VOID** if the instrument is opened by anyone other than a factory authorized service center with the one exception where requirements set forth in the manual allow an operator to replace consumables or perform recommended cleaning;

g. This warranty is **VOID** if the product has been misused, neglected, subjected to accidental or intentional damage, or is not properly installed, maintained, or cleaned according to the requirements of the manual. Unless specifically authorized in a separate writing by Seller, Seller makes no warranty with respect to, and shall have no liability in connection with, goods which are incorporated into other products or equipment, or which are modified by any person other than Seller.

The foregoing is **IN LIEU OF** all other warranties and is subject to the **LIMITATIONS** stated herein. **NO OTHER EXPRESS OR IMPLIED WARRANTY OF FITNESS FOR PARTICULAR PURPOSE OR MERCHANTABILITY IS MADE. WITH RESPECT TO SELLER'S BREACH OF THE IMPLIED WARRANTY AGAINST INFRINGEMENT, SAID WARRANTY IS LIMITED TO CLAIMS OF DIRECT INFRINGEMENT AND EXCLUDES CLAIMS OF CONTRIBUTORY OR INDUCED INFRINGEMENTS. BUYER'S EXCLUSIVE REMEDY SHALL BE THE RETURN OF THE PURCHASE PRICE DISCOUNTED FOR REASONABLE WEAR AND TEAR OR AT SELLER'S OPTION REPLACEMENT OF THE GOODS WITH NON-INFRINGING GOODS.**

TO THE EXTENT PERMITTED BY LAW, THE EXCLUSIVE REMEDY OF THE USER OR BUYER, AND THE LIMIT OF SELLER'S LIABILITY FOR ANY AND ALL LOSSES, INJURIES, OR DAMAGES CONCERNING THE GOODS (INCLUDING CLAIMS BASED ON CONTRACT, NEGLIGENCE, TORT, STRICT LIABILITY OR OTHERWISE) SHALL BE THE RETURN OF GOODS TO SELLER AND THE REFUND OF THE PURCHASE PRICE, OR, AT THE OPTION OF SELLER, THE REPAIR OR REPLACEMENT OF THE GOODS. IN THE CASE OF SOFTWARE, SELLER WILL REPAIR OR REPLACE DEFECTIVE SOFTWARE OR IF UNABLE TO DO SO, WILL REFUND THE PURCHASE PRICE OF THE SOFTWARE. IN NO EVENT SHALL SELLER BE LIABLE FOR LOST PROFITS, BUSINESS INTERRUPTION, OR ANY SPECIAL, INDIRECT, CONSEQUENTIAL OR INCIDENTAL DAMAGES. SELLER SHALL NOT BE RESPONSIBLE FOR INSTALLATION, DISMANTLING OR REINSTALLATION COSTS OR CHARGES. No Action, regardless of form, may be brought against Seller more than 12 months after a cause of action has accrued. The goods returned under warranty to Seller's factory shall be at Buyer's risk of loss, and will be returned, if at all, at Seller's risk of loss.

Buyer and all users are deemed to have accepted this LIMITATION OF WARRANTY AND LIABILITY, which contains the complete and exclusive limited warranty of Seller. This LIMITATION OF WARRANTY AND LIABILITY may not be amended, modified or its terms waived, except by writing signed by an Officer of Seller.

Service Policy

Knowing that inoperative or defective instruments are as detrimental to TSI as they are to our customers, our service policy is designed to give prompt attention to any problems. If any malfunction is discovered, please contact your nearest sales office or representative, or call TSI's Customer Service department at 1-800-874-2811 (USA) or (651) 490-2811.

Trademarks
TSI®, TSI logo, Alnor®, LogDat-CH, are trademarks of TSI Incorporated.

.

CONTENTS

About This Manual ..... **iii**
Formatting and Typography iii
Technical Assistance—Help! iii

Chapter 1. Introduction **1**
Instrument Description 1
Micromanometer 2
Micromanometer 3
Standard Tools 4
Pitot Tube 4
Static Pressure Probe 4
Balometer® Capture Hoods 4
Optional Tools 4
Velocity Matrix 4
Air Flow Probe 4
Temperature/Humidity Probe 4
Thermoanemometer Probes 5

Chapter 2. Unpacking and Setting Up **7**
Unpacking 7
Preparing the Instrument for Use 8
Power the Micromanometer with the AC Adapter 8
Power the Micromanometer with Batteries 8
Using the Pressure Ports 10
Connecting a Pitot Tube 11
Connecting the Static Pressure Port to the Micromanometer 12
Attaching the Micromanometer to the Capture Hood Base 12
Connecting the Velocity Matrix to the Micromanometer 13
Connecting the Air Flow Probe to the Micromanometer 14
Connecting the Base Temperature Probe, Temperature and Humidity Probe or Thermoanemometer Probe to the Micromanometer 15
Using the Telescoping Thermoanemometer Probes or Temperature and Humidity Probe 15
Extending the Probe 15
Retracting the Probe 16

Chapter 3. Getting Started **17**
Keypad Functions 17
Common Terms 19

Chapter 4. Menu Setup and Navigation **21**
Menus 21
Pressure Tool 21
Display Setup 23
Flow Setup [Pitot Tube, AF Probe (straight pitot tube) or Thermoanemometer Probe] 24
Actual/Standard Setup 25
Settings 26
Data Logging 27
Bluetooth Functions 37
Applications 38
Calibration Factor (Cf) Selection 40
Calibration 40
Printing Data Using the Portable Printer 41
LogDat-CH™ Downloading Software 41

Chapter 5. Changing Capture Hoods 43
Capture Hood Parts Identification 43
Capture Hood Assembly 43
Alternate Hood Installation 44
Direct Inflow Measurement Hood for Biological Safety Cabinets 49

Chapter 6. Flow Measurements Using the Capture Hood 55
Single Reading Measurements 55
Running Average Measurements 56
Capture Hood Measurements (non-backpressure compensated) 56
Backpressure Compensated Measurements 56
“ERROR” Display 57

Chapter 7. Maintenance and Troubleshooting 59
Fabric Hood 59
Micromanometer 59
Manifold 59
Cases 59
Calibration 59

Appendix A. Back Pressure 61
Verifying Flow Measurements 61

Appendix B. Traversing a Duct to Determine Average Air Velocity or Volume 63
Where to Take the Measurement 63
Traversing a Round Duct 63
Traversing a Square Duct 65

Appendix C. Swirl X Flow Conditioner for Alnor Model EBT731 Balometer® Capture Hood Optional Accessory (P/N 801213) 67
Description 67
Performance Data 68
Installation and Usage 69

About This Manual

This manual explains how to set up, operate and maintain the Alnor EBT730/EBT731. Please read it thoroughly before using the instrument.

Formatting and Typography

- Step-by-step instructions are numbered in boldface type: **1**, **2**, **3**, etc., set flush-left against the margin.
- References to keys on the micromanometer and the instrument's displayed readout are represented by a typeface called Arial. In addition to the different typeface, displayed messages appear in quotes.
- When reference is made to other sections of the manual, the section title is italicized.

Technical Assistance—Help!

For technical assistance or questions about the instrument, or if the instrument needs repair or recalibration, call Customer Service at (800) 874-2811 (USA), or (1) 651-490-2811 (International). Product application notes are available to provide more information on the product. These application notes, as well as other related material, can be obtained by calling Customer Service or by visiting the web site at www.alnor.com.

(This page intentionally left blank)

Chapter 1. Introduction

The Electronic Balancing Tools EBT730/EBT731 are lightweight and easy-to-use instruments packaged with a variety of accessories for measuring pressure, temperature, humidity, air velocity, and air volume. Features of the micromanometer include:

- Single-function keys for ease of use
- Auto-zero for pressure measurements, auto-density correction, and back-pressure compensation when used with a capture hood
- User-selectable English and metric units
- Conversions between actual and standard flow
- Discrete or continuous display and data logging capabilities
- Output port for downloading to a printer or a PC
- Bi-directional Bluetooth communications to 8934 printer or PC
- Powered by AC adapter or batteries (rechargeable NiMH or alkaline)
- Full field calibration

Designed for:

- Test and balance professionals
- Mechanical contractors
- Industrial hygienists
- Plant engineers and facilities maintenance personnel

Applications include:

- Test, balance, or commission HVAC systems
- Test clean rooms and biological safety cabinets
- Measure fume hood or filter face velocity
- Measure pressure, temperature, relative humidity, air velocity, or air flow

	CAUTION
	WHILE USING THE BALOMETER® AIR BALANCING INSTRUMENT TO TEST AIR FLOW IN DUCTS, YOU MAY COME INTO CONTACT WITH OR BE EXPOSED TO DUST, POLLEN, MOLD, FUNGUS, OR OTHER AIRBORNE CONTAMINANTS. IF YOU ARE OR MAY BE SENSITIVE TO DUST, POLLEN, MOLD, FUNGUS, OR OTHER AIRBORNE CONTAMINANTS, **ALWAYS** USE AN APPROPRIATE MASK OR RESPIRATOR WHILE EMPLOYING THE BALOMETER® AIR BALANCING INSTRUMENT.

Instrument Description

The basic EBT730 includes a micromanometer, carrying case, 18 in. (46 cm) pitot tube, (2) static pressure probes, (2) 8 ft (2.4 m) Norprene® tubing, user manual, LogDat-CH™ for Windows® data downloading software and RS232 interface cable, neck strap, internal NiMH battery charger, (4) AA NiMH batteries, AC adapter, and NIST traceable certificate.

®Norprene is a registered trademark of Norton Performance Plastics, Akron, Ohio, USA.
®Windows is a registered trademark of Microsoft Corporation.

The basic EBT731 contains all of the EBT730 components plus 2 ft × 2 ft (610 mm × 610 mm) air capture hood, frame, and base. A variety of optional tools *(see below)* are also available to meet your measurement needs.

The following paragraphs provide brief descriptions of the micromanometer and the various standard and optional tools for use with the EBT Refer to Chapters 3 and 4 for more detailed information on using the micromanometer and taking measurements with various sensors and probes.

Micromanometer

Figures 1 and 2 show the features of the micromanometer used in the EBT730/EBT731.

Figure 1: Features of the EBT730/EBT731 Micromanometer, Front View

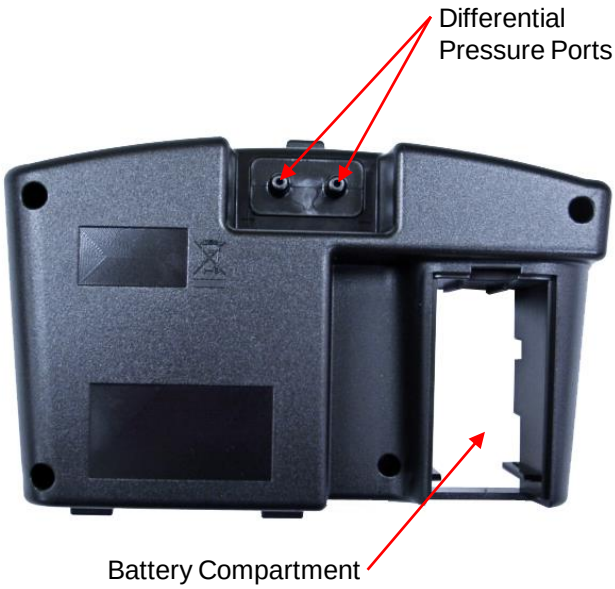

Figure 2: Features of the EBT730/EBT731 Micromanometer, Back View

Figures 3 and 4 show the features of the Balometer® Capture Hood.

Figure 3: Features of the EBT Balometer® Base, Side View

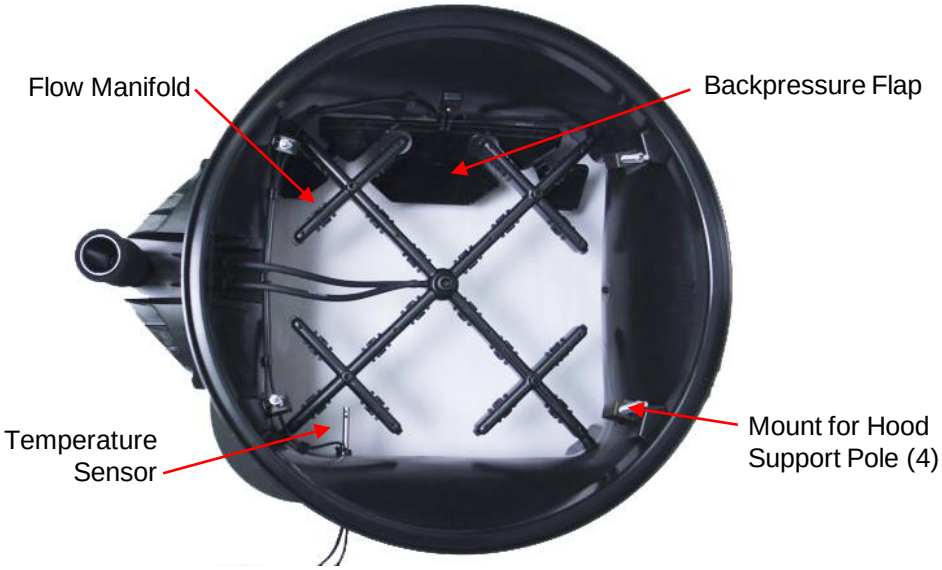

Figure 4: Features of the EBT Balometer® Base, Inside View

Micromanometer

The micromanometer is a multifunction instrument used to measure air velocity, air flow, absolute and differential pressure, temperature, and humidity measurements when used with the tools listed below. The lightweight micromanometer incorporates auto-zeroing for high-accuracy, low pressure measurements. Measurements can be stored to memory for later recall or downloaded to a PC using the LogDat-CH software and USB cable or with Bluetooth communications.

Standard Tools

This section gives a brief description of standard tools for the micromanometer.

Pitot Tube

The pitot tube is primarily used to obtain air velocity, air volume, and velocity pressure measurements within ductwork. An 18 in. (46 cm) pitot tube is included with the EBT730 or EBT731 kits. Alternate sizes are available.

Static Pressure Probe

The static pressure probe is primarily used to obtain static pressure measurements within ductwork. Differential pressure measurements across a filter or coil can also be performed by placing one probe upstream and the other downstream of the filter or coil.

Balometer® Capture Hoods

Capture hoods are used to obtain volumetric air flow measurements through diffusers, registers and grilles. Capture hoods are available in a kit with one 2 ft × 2 ft (610 mm × 610 mm) fabric hood, frame, and base assembly. Alternate hood sizes are available. Descriptions and part numbers can be found in Table 2 of Chapter 2 of this manual.

Optional Tools

This section gives a brief description of optional tools for the micromanometer.

Velocity Matrix

The velocity matrix is used to obtain area-averaged multi-point air velocity measurements useful in laboratory hood face velocity testing, filter face velocity testing, and other applications such as kitchen exhaust.

Air Flow Probe

The air flow probe model 800187 is an 18” (46 cm) straight pitot tube used to obtain single point air velocity or air volume measurements in ductwork.

Temperature/Humidity Probe

The temperature/humidity probe is used to obtain temperature measurements over the range of 14 to 140°F (-10 to 60°C), humidity measurements over the range of 5 to 95% RH, along with calculated wet bulb temperature of 40 to 140°F (4 to 60°C) and dewpoint temperature of 5 to 120°F (-15 to 49°C).

Thermoanemometer Probes

Thermoanemometer probes can be used to measure air temperature, air velocities or air volume measurements in ductwork as well as lower velocity applications such as face velocity measurements of chemical fume hoods, biological safety cabinets and filtration systems. Four models are available in straight or articulating construction, and with or without a relative humidity sensor. Models with a relative humidity sensor can also calculate wet bulb and dewpoint temperature.

Thermoanemometer Probes	
Model	**Description**
960	Air Velocity and Temperature, Straight Probe
962	Air Velocity and Temperature, Articulating Probe
964	Air Velocity, Temperature, and Humidity, Straight Probe
966	Air Velocity, Temperature, and Humidity, Articulating Probe

(This page intentionally left blank)

Chapter 2. Unpacking and Setting Up

This chapter describes unpacking and setting up (preparing) the Electronic Balancing Tool (EBT) capture hood for use.

Unpacking

As you unpack the instrument and accessories, check the components against your packing list. If any parts are missing or damaged, notify us immediately. Tables 1 and 2 list available standard and optional components.

Table 1: List of Standard and Optional Components

Item	Part No.
Models EBT730 and EBT731 Electronic Balancing Tools (Alnor)	EBT730 EBT731
Carrying case, EBT730	1319378
Carrying case, wheeled hood kit, EBT731	1319379
AA-size NiMH battery, four required	1208048
Two battery holders for four AA batteries	1801157
AC adapter	801040
Carry strap-tether	2913011
18” (46 cm) pitot probe	534534001
Two static pressure probes	3002017
16 ft (4.8 m) Neoprene tubing	3900031
LogDat-CH software	N/A
USB cable	1303754
Operation and Service Manual	6005725
Calibration certificate	N/A
Velocity Matrix Add On Kit	801090
Air Flow Probe - 18” (46 cm) straight pitot probe	800187
Temperature and Humidity Probe	800220
Swirl X Flow Conditioner	801213
Air Velocity and Temperature, Straight Probe	960
Air Velocity and Temperature, Articulating Probe	962
Air Velocity, Temperature, and Humidity, Straight Probe	964
Air Velocity, Temperature, and Humidity, Articulating Probe	966
Wireless Bluetooth printer	8934

Table 2: List of Optional Hood and Frame Kits

Item	Part No.
1 ft × 4 ft (305 mm × 1220 mm) fabric hood and frame kit	801200
2 ft × 4 ft (610 mm × 1220 mm) fabric hood and frame kit	801201
1 ft × 5 ft (305 mm × 1525 mm) fabric hood and frame kit	801202
3 ft × 3 ft (915 mm × 915 mm) fabric hood and frame kit	801203
16 in. × 16 in. (406 mm × 406 mm) fabric hood and frame kit	801209
5.25 in. × 4 ft (133 mm × 1220 mm) fabric hood and frame kit	801210
28 in. × 28 in. (710 mm × 710 mm) fabric hood and frame kit	801211
28 in. × 50 in. (710 mm × 1270 mm) fabric hood and frame kit	801212
1 ft × 4 ft (305 mm × 1220 mm) and 2 ft × 4 ft (610 mm × 1220 mm) fabric hood	801206

Item	Part No.
and frame kit	
1 ft × 5 ft (305 mm × 1525 mm) and 3 ft × 3 ft (915 mm × 915 mm) fabric hood and frame kit	801207
8 in. × 22 in. (205 mm × 560 mm) BSC fabric hood, frame, poles, and stand kit	801204
10 in. × 22 in. (255 mm × 560 mm) BSC fabric hood, frame, poles, and stand kit	801205
The BSC hood kits are used to certify Class II bio-safety cabinets by taking direct in-flow measurements for NSF compliance.	

Please complete the registration card included with this product and mail it promptly. The card allows us to inform you of product updates. If you prefer, register through the TSI web site.

Preparing the Instrument for Use

Before you can use the Electronic Balancing Tool, you must decide on a power source.

Power the Micromanometer with the AC Adapter

The AC adapter can be used to power the instrument or to charge the NiMH batteries when the DIP switch in the battery compartment is set to NiMH. If the DIP switch is set to Alkaline, and the AC power adapter is connected then the batteries will be bypassed and the meter will be powered by the AC adapter. Be sure to provide the correct voltage and frequency, which is marked on the back of the AC adapter.

Power the Micromanometer with Batteries

The micromanometer is designed to operate with either alkaline or NiMH rechargeable batteries. Battery life will be shorter if NiMH batteries are used. For your convenience, four NiMH batteries are included with the instrument. If NiMH batteries are used the DIP switch will need to be changed. Refer to the next section on setting the battery selection switch.

Note
The four NiMH batteries included with the instrument will need to be charged prior to use. Charge time is 4 hours. Carbon-zinc batteries are not recommended due to the danger of battery acid leakage.

To select the type of batteries you are using:

1. Turn the unit off and locate the battery cover on the back of the micromanometer (see Figure 5).

Figure 5: Battery Cover Removal

2. Press down on the compartment cover and slide it down. (The cover slides off.)
3. Remove the battery holder by pulling up on the bottom (to loosen it) and then pulling the battery holder free.
4. Refer to Figure 6 and set the battery selection switch to indicate the type of batteries you are using.

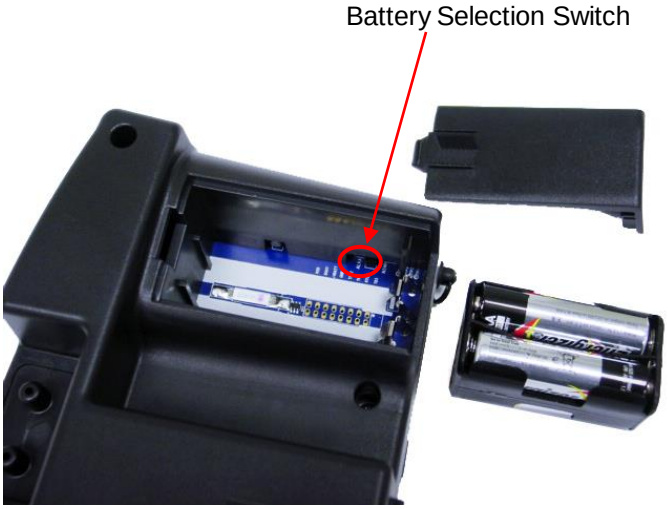

Figure 6: Location of Battery Type Selector Switch

5. Reinstall the battery holder and replace the battery compartment cover.

To install replacement batteries:

1. Turn the unit off and locate the battery cover on the back of the micromanometer (see Figure 5).
2. Press down on the compartment cover and slide it down. (The cover slides off.)

3. Remove the battery holder by pulling up on the bottom (to loosen it) and then remove the battery holder.
4. Remove the old batteries and replace with fresh batteries (alkaline or rechargeable NiMH). Make certain batteries are correctly oriented.
5. Verify the battery selection switch is correctly set (see Figure 5).
6. Reinstall the battery holder and replace the compartment cover.

Note
Make sure the battery holder is oriented so that its terminals make contact with the spring contacts in the battery compartment.

If fresh, new alkaline batteries are used, the battery indicator will show four (4) bars when first turned on. With NiMH batteries, the indicator *may* show a lower value even when they are fully charged.

CAUTION
The percent power remaining will not be accurate for NiMH batteries because their voltage does not decrease linearly with power use. Due to the danger of battery leakage, remove batteries from the battery compartment before storage. **Never** mix battery types. The NiMH batteries should only be charged at room temperature. Starting with batteries that are too cold or too warm can cause the charge cycle to stop early.

Using the Pressure Ports

The differential pressure ports are used to connect the micromanometer to various pressure based tools including the Balometer® Capture hood, Pitot tubes, Air Flow probe (straight pitot probe), Velocity Matrix and static pressure probes. Tubing is used to connect the ports on the micromanometer to the probes.

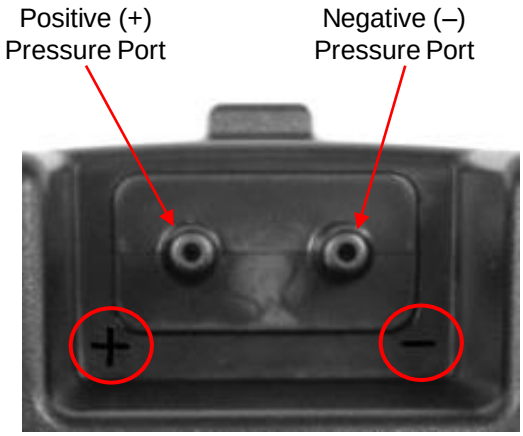

Figure 7. Pressure Ports

Connecting a Pitot Tube

When the micromanometer is connected to a pitot tube, air velocity or air volume measurements can be taken. The pitot tube is connected to the (+) and (–) pressure ports on the micromanometer using two pieces of tubing of equal length. The total pressure port of the probe connects to the (+) port on the meter, and the static pressure port of the probe connects to the (–) port on the meter.

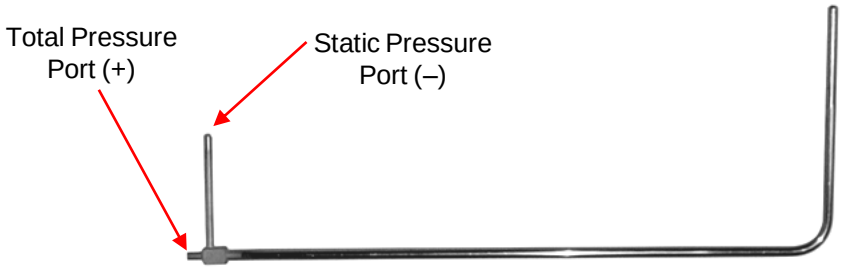

Figure 8: Pitot Tube

Note
The pitot velocity needs a valid temperature to perform the standard or actual velocity correction. This is accomplished in the “Actual/Std Setup” menu. If no probe capable of measuring temperature (plug in probe) is connected, the“Temp Source” must be set to “Entered”. The duct air temperature must then be manually inputted by the user using the “Entered Temp”setting. If the “Temp Source” is set to Probe, and no probe is connected, dashes (------) will appear on the display. For more information on entering the temperature manually, refer to the Actual/Standard Setup section of this manual.

	CAUTION
	Do **not** use the instrument or probes near hazardous voltage sources since serious injury could result.

Connecting the Static Pressure Port to the Micromanometer

The static pressure port on the static pressure probe will be connected to the (+) port on the micromanometer. The (-) port on the micromanometer will be open to atmosphere (see Figure 9). The Static Pressure probe is used to measure the duct static pressure and features a magnet which holds the probe to the ductwork.

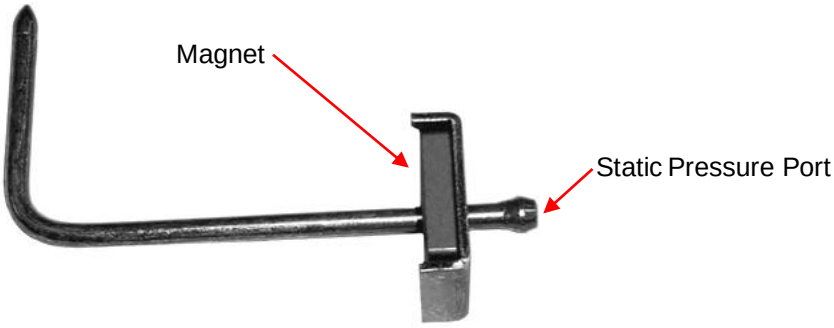

Figure 9: Static Pressure Probe

Attaching the Micromanometer to the Capture Hood Base

1. Tilt the meter forward and align the tabs in the base of the meter with the two matching slots in the bottom of the recessed area at the front of the base (see Figure 10).
2. When the tabs are engaged in the slots, press firmly on the face of the meter above the display until the tab in the top center of the meter “clicks” into the bent metal retaining clip in the base.
3. Attach the temperature cable and the back pressure flap switch cable to the right side of the meter.
4. To remove the meter from the base, first disconnect the temperature cable and the back pressure flap switch cable, then press upward on the metal retaining clip to release the meter from the base.

Figure 10: Attaching the Meter to the Capture Hood Base

Connecting the Velocity Matrix to the Micromanometer

The positive port (+) is located on the side of the Velocity Matrix that is opposite the handle assembly. The positive port (+) on the Velocity Matrix will be connected to the (+) port on the micromanometer, and the negative port (–) on the Velocity Matrix is connected to the (–) port on the micromanometer.

Standoffs can be screwed together to make different lengths and are used to maintain a fixed and level orientation away from a filter. The standoffs are attached to the positive (+) side of the velocity matrix.

The handle assembly is attached to the downstream or negative (–) side in the center of the velocity matrix (see Figure 11).

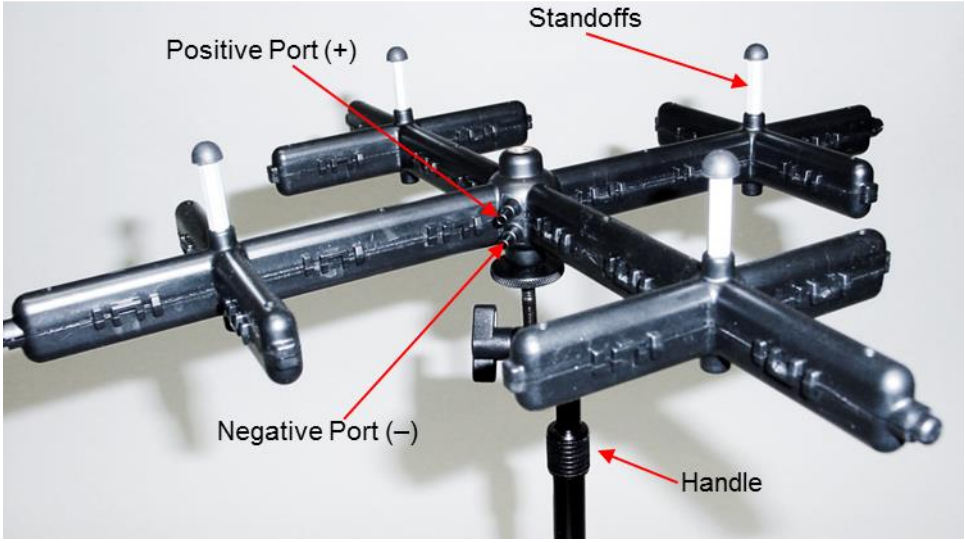

Figure 11: Velocity Matrix

Note
The Velocity Matrix needs a valid temperature to perform the standard or actual velocity correction. This is accomplished in the “Actual/Std Setup” menu. If no probe capable of measuring temperature (plug in probe) is connected, the“Temp Source” must be set to “Entered”. The air temperature must then be manually inputted by the user using the “Entered Temp”setting. If the “Temp Source” is set to Probe, and no probe is connected, dashes (------) will appear on the display. For more information on entering the temperature manually, refer to the Actual/Standard Setup section of this manual.

Connecting the Air Flow Probe to the Micromanometer

When the micromanometer is connected to the Air Flow probe (straight pitot probe), air velocity or air volume measurements can be taken. The Air Flow probe is connected to the (+) and (–) pressure ports on the micromanometer using two pieces of tubing of equal length. The total pressure port of the probe connects to the (+) port on the meter, and the static pressure port of the probe connects to the (–) port on the meter (see Figure 12).

Note
Observe the arrow indicator on the Air Flow Probe (straight pitot probe) when taking air velocity or air volume measurements.

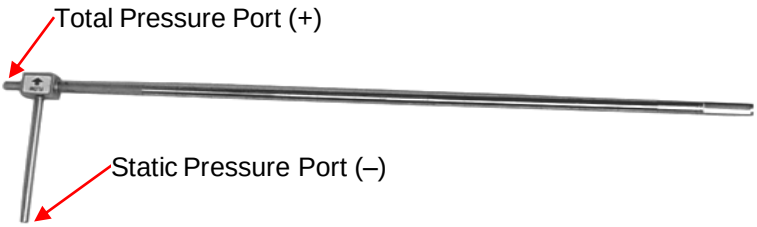

Figure 12: Air Flow Probe

Note
The pitot velocity needs a valid temperature to perform the standard or actual velocity correction. This is accomplished in the “Actual/Std Setup” menu. If no probe capable of measuring temperature (plug in probe) is connected, the “Temp Source” must be set to “Entered”. The duct air temperature must then be manually inputted by the user using the “Entered Temp”setting. If the “Temp Source” is set to Probe, and no probe is connected, dashes (------) will appear on the display. For more information on entering the temperature manually, refer to the Actual/Standard Setup section of this manual.

Connecting the Base Temperature Probe, Temperature and Humidity Probe or Thermoanemometer Probe to the Micromanometer

These probes have a “D” shape overmolding on the mini-DIN connector which must align with the connector on the right hand side of the micromanometer (see Figure 13). This will ensure the probe is properly connected and remains so during use. Once connected and turned on, refer to the **DISPLAY SETUP** for displaying the desired measurements.

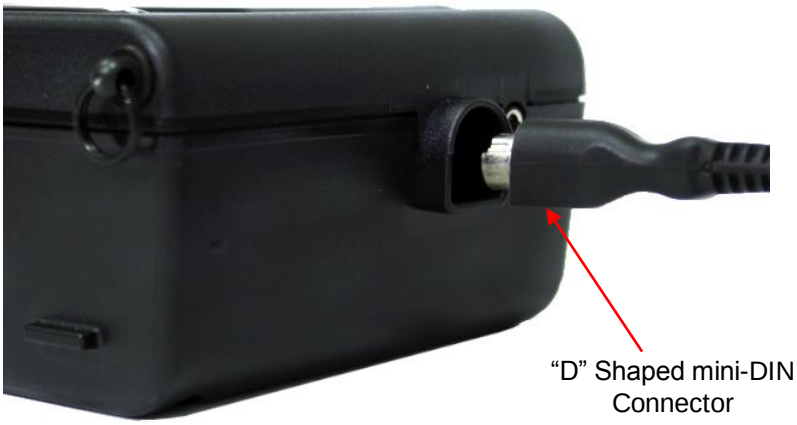

Figure 13: Connector for the Base Temperature Probe, Temperature/Humidity Probe or Thermoanemometer Probes

Using the Telescoping Thermoanemometer Probes or Temperature and Humidity Probe

The telescoping thermoanemometer probe contains the velocity, temperature, and humidity sensors. When using the probe, make sure the sensor window is fully exposed and the orientation dimple is facing upstream.

The telescopic temperature and humidity probe contains the temperature and humidity sensors. This probe is ideally suited for in-duct measurements and provides calculations for wet bulb or dewpoint temperature.

Note
For temperature and humidity measurements, make sure that at least 3 inches (7.5 cm) of the probe is in the flow to allow the temperature and humidity sensors to be in the air stream.

Extending the Probe

To extend the probe, hold the handle in one hand while pulling on the probe tip with the other hand. Do ***not*** hold the cable while extending the probe as this prevents the probe from extending.

Retracting the Probe

To retract the probe, hold the handle in one hand while gently pulling the probe cable until the smallest antenna section is retracted.

	CAUTION
	Do **not** use the instrument or probes near hazardous voltage sources since serious injury could result.

Chapter 3. Getting Started

This section provides information to help you quickly become familiar with the Micromanometer functions.

Keypad Functions

The keypad lets you enter information, initiate functions, and change values stored in the micromanometer. It will be helpful before operating the micromanometer to understand what each of the keys functions do.

Figure 14: Keypad Functions

Keypad Function	Description
ON/OFF (I/O) Key	Press **I/O** to turn the meter on and off. During the power up sequence the display will show the following: Model Number, Serial Number, and Software Revision. To turn the instrument off, press and ***hold*** the **I/O** Key for 3 seconds. The instrument will count down (OFF2, OFF1, OFF). If the AC Adapter is attached, the Battery and **I/O** Key is bypassed. If the **I/O** Key is pressed while the AC adapter is attached, the instrument instructs you to "Unplug the instrument to turn off the unit". To turn the instrument on again, attach the AC adapter or press the **I/O** Key.
Arrow (▲▼◄►) Keys	Press to scroll through choices while setting a parameter

Keypad Function	Description
Enter (↵) Key	Press to accept a menu selection, value or condition. Press to Start or Stop data logging when in Continuous Key mode.
READ Key	If the Data Logging is set to **Manual/Single**, pressing the **READ** key begins a reading, which stops automatically when the reading is done. If the display mode is set to **Manual/RunAvg**, the micromanometer will measure continuously, and pressing **READ** will alternately pause or resume the measurement. The red button on the capture hood base has the same function as the **READ** key. ***Note:*** *Pressing the READ key will not store any measurement to memory.*
SAVE	The **SAVE** key is used to save the currently displayed measurement to the data logging memory.
ESC Key	The **ESC (Escape)** key is used to cancel, end an operation, or to exit a screen of displayed information.
NEXT TEST	Advances the Test ID number. The **NEXT TEST** key is used to select a new unused Test Id for saving Samples when logging data.
(Print)	The **PRINT** key downloads data to an optional printer (8934) or to a computer.
STATS	The **STATS** (Statistics) key will display the average, minimum, maximum and number of samples of data stored in the current Test ID.
MENU	Press the **Menu** key to access the Menu selections, which are Pressure Tool, Display Setup, Flow Setup, Actual/Std Setup, Data Logging, Bluetooth Functions, Applications, Cf Selection and Calibration.

(continued on next page)

Common Terms

In this manual there are several terms that are used in different places. The following is a brief explanation of the meanings of terms.

Term	Description
Sample	Consists of all of the measurement parameters stored at the same time.
Test ID	A group of samples. The statistics (average, minimum, maximum, and count) are calculated for each test ID. The maximum number of test IDs is 100.
Time Constant	The time constant is an averaging period. It is used to dampen the display. If you are experiencing fluctuating flows, a longer time constant will slow down those fluctuations. The display will update every second, but the displayed reading will be the average over the last time constant period. For example, if the time constant is 10 seconds, the display will update every second, but the displayed reading will be the average from the last 10 seconds. This is also referred to as a “moving average”. ***Note**: The time constant only applies to measuring velocity or volume when using 960 series thermoanemometer probes or volume using the capture hood.*
Sample Time	Sample Time is the time period over which the Sample will be averaged. The sample time can be adjusted when the data logging mode is set to Auto-Save/RunAvg.
Log Interval	The logging interval is the period over which the instrument will average the logged sample. For example, if the logging interval is set to 30 minutes, each sample will be the average over the previous 30 minutes. Log Interval is used with Cont-Key/RunAvg and Cont-time/RunAvg logging modes.
Test Length	This is the time over which the data will be logged in the “Continuous-Time” mode of data logging.
Sum	The sum of all samples in a Test ID [SUM is only available for Capture Hood or Diffuser Flow (flow from pressure and K-factor)].
Minimum	The sample with lowest value in the Test ID.
Maximum	The sample with highest value in the Test ID.
Average	The SUM divided by the number of Samples.

(This page intentionally left blank)

Chapter 4. Menu Setup and Navigation

Menus

The menu structure is organized to allow easy navigation and instrument setup utilizing the arrow and ↵ keys. To exit a menu or menu item, press the **ESC** key.

- To access the Menu items, press the **Menu** key.
- To select a parameter, use the Arrow keys to highlight the selection and press the ↵ key.

To exit a Menu item, press the **ESC** key.

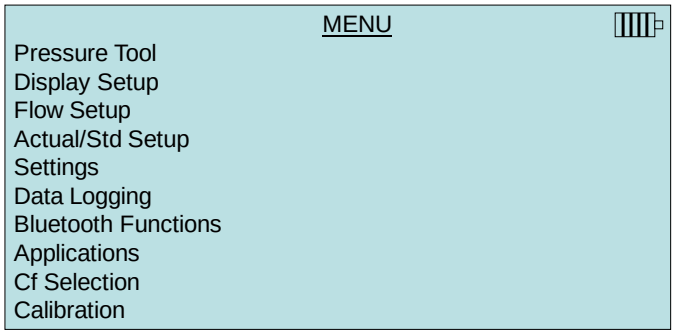

Pressure Tool

The instrument accepts a number of different measurement devices which utilize the differential pressure sensor and are referred to as Pressure Tools.

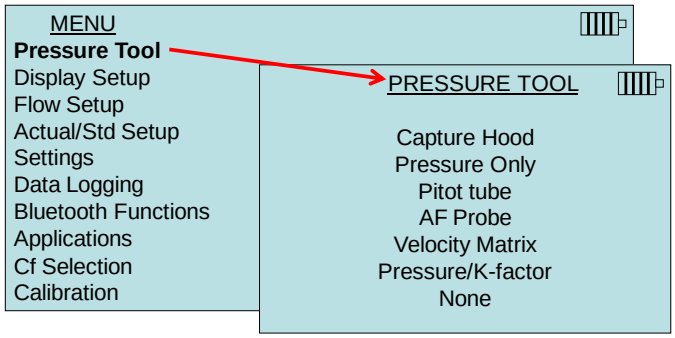

Capture Hood	For measuring flow from grilles and diffusers.
Pressure Only	For measuring static or differential pressures.
Pitot Tube	Flow and velocity measurements inside ductwork.
AF (Air Flow) Probe – Straight Pitot Probe	Flow and velocity measurements inside ductwork. Can also be used for face velocity measurements.
Velocity Matrix	For area-averaged multi-point face velocity measurements.
Flow/K-factor	Used to calculate flow from diffusers equipped with differential pressure taps. The flow through the diffuser can be calculated by multiplying the square root of the pressure times a user entered k-factor obtained from the diffuser manufacturer. ***Note**: The K-factor is entered in the Flow Setup Screen.*
None	Disables pressure sensor and zeroing valves. Select **None** when using thermoanemometer probes when differential pressure measurements are not required.

Table 3 identifies each Pressure Tool and the units of measure available each.

Table 3: Pressure Tool Selection and Display

Display Shows	Tool	Units Available
with flow units	Capture Hood	l/s, m^3/hr, m^3/s, CFM
Pressure units only	Pressure Only	in H_2O, mm H_2O, cm H_2O, Pa, hPa, kPa, mm Hg, cm Hg, in Hg,
with velocity or flow units	Pitot Tube Velocity Pitot Tube Flow	ft/min, m/s l/s, m^3/hr, m^3/s, CFM
with velocity or flow units	Air Flow Probe Velocity Air Flow Probe Flow	ft/min, m/s l/s, m^3/hr, m^3/s, CFM
with velocity units	Velocity Matrix	ft/min, m/s
Pressure units with K-factor and flow units	Diffuser Flow	l/s, m^3/hr, m^3/s, CFM

Note

When the micromanometer is mounted on the base for use as a capture hood and the headphone jack is connected, the unit will automatically default the Pressure Tool to Capture Hood mode**.** The options when in the Pressure Tool menu will be Capture Hood or Hood BP Mode.

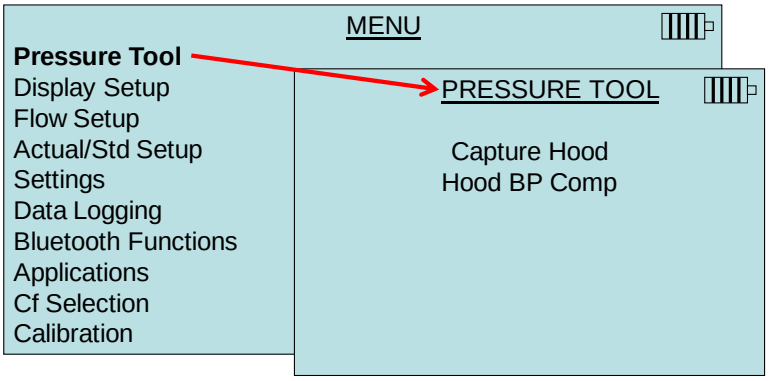

Display Setup

Display Setup menu is where you will setup the desired parameters to be displayed on the instrument screen. With a parameter highlighted you can then use the **ON** arrow key to have it show up on the instrument screen or select the **OFF** arrow key to turn off the parameter. Use **PRIMARY** arrow key to have a parameter show up on the instrument screen in a larger display. A total of five (5) parameters can be shown on the display, one (1) primary (large font) and four (4) secondary. Parameters shown in the Display Setup screen are dependent on the type of probe currently connected.

- When set to **PRIMARY**, measurement will be the large font on the display.
- When set to **ON**, measurement will be displayed as a secondary parameter (up to 4 can be displayed).
- When set to **OFF**, measurement will not be displayed.

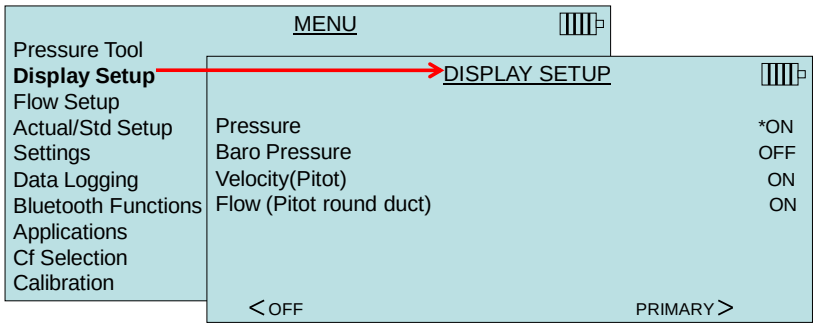

Display Setup Screen with Pitot Tube Selected as Pressure Tool

Note
Depending on the Pressure Tool selected or probe connected, different measurement parameters will appear in the Display Setup screen.

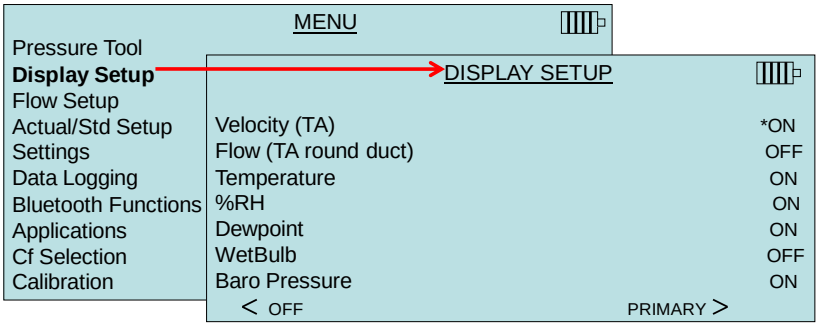

Display Setup Screen with optional 964 or 966 Thermoanemometer Probe Connected

Flow Setup [Pitot Tube, AF Probe (straight pitot tube) or Thermoanemometer Probe]

In **Flow Setup** mode, there are three types when using a Pitot tube, AF probe or thermoanemometer probe: Round Duct, Rectangle Duct and Duct Area. Use the ▲ and ▼ keys to scroll through the types and then press the ↵ key to accept. To change the duct size, highlight the **Enter Settings** option and press the ↵ key. Use the arrow keys to make changes and press the ↵ key to accept.

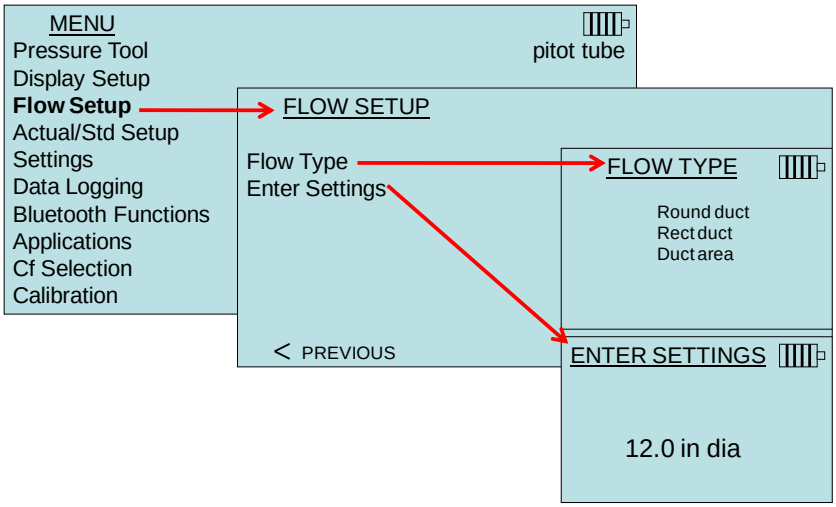

Flow Setup (Pressure/K-factor)

When the Pressure Tool is set to Flow/K-factor, up to four (4) user-adjustable K-factors can be defined within the **Flow Setup** menu. Use the arrow keys to select a Kfactor or to make changes and press the ↵ key to accept.

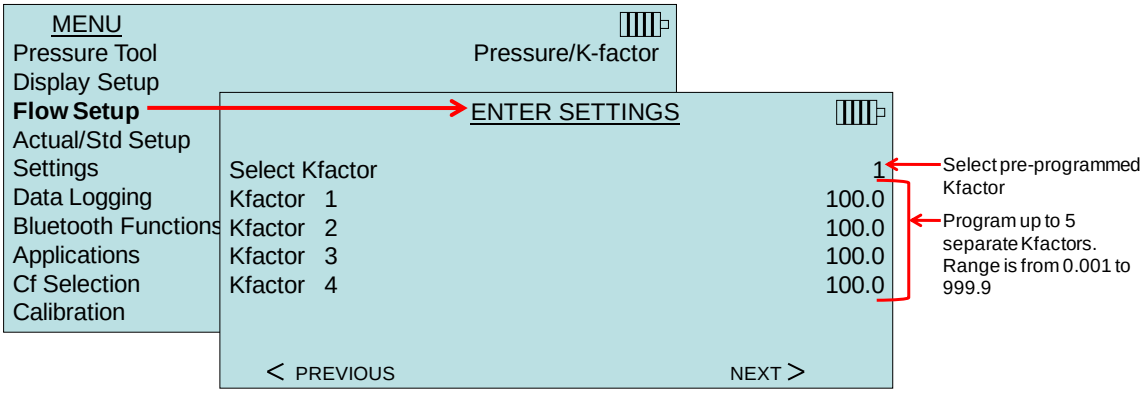

Note

When measuring flow with a Kfactor, the value can be quickly changed by pressing the ▲ or ▼ key:

1. Set Flow to **PRIMARY** in Display Setup menu.
2. Press the ▲or ▼key to access Kfactor adjustment screen.
3. Make adjustments with arrow keys and press ↵ to accept.

Note
Press/Kfact allows for calculating flow rate from diffusers or flow stations with pressure taps using the instruments pressure ports and Kfactors. The Kfactors are obtained from the diffuser or flow station manufacturer. For more information, refer to Application Note TSI-114.

Actual/Standard Setup

Choose **Actual/Standard** measurements and parameters in the Actual/Standard Setup menu. The instrument measures the actual barometric pressure using an internal sensor. The temperature source can be entered manually or taken from a probe that measures temperature (plug in probe).

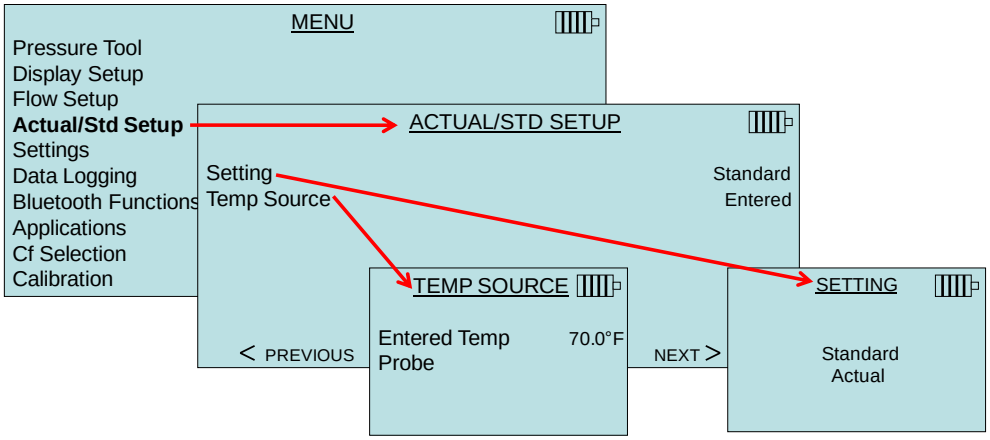

The pressure based probes (pitot tube, AF probe and Velocity Matrix) need a valid temperature to perform the standard or actual velocity or volume flow corrections. This is accomplished in the **Actual/Std Setup** menu. If no probe capable of measuring temperature (plug in probe) is connected, the **Temp Source** must be set to **Entered**. The air temperature must then be manually inputted using the **Entered Temp** setting. If the **Temp Source** is set to Probe, and no probe is connected, dashes (------) will appear on the display.

For the Diffuser Flow tool (Flow from Pressure and K-factor), temperature and barometric pressure are not used for calculating flow. Therefore, a set temperature is not required for this tool.

Settings

Settings menu is where you can set the general settings. These include Language, Beeper, Select Units, Time Constant, Contrast, Set Time, Set Date, Time Format, Date Format, Number Format, Backlight, Auto Off. Use the arrow keys to select an option or to change the settings for each option. Press the ↵ key to accept settings.

In addition to the general settings, the **Settings** menu also includes RS232 Baud Rate, Deadband and Headphone Input configuration settings.

SETTINGS	
Language	English
Beeper	Disable
Select Units	
Time Constant	1 Second
Contrast	5
Set Time	09:14 AM
Set Date	01/07/12
Time Format	12 hr
Date Format	MM/DD/YY
Number Format	XX,XXX.YY
Backlight	Auto
Auto Off	Enable
RS232 Baud Rate	9600
Deadband	Enable
Headphone Input	Enable

RS232 Baud Rate	Sets the speed a computer will accept information.
Deadband	The deadband determines the velocity or volume measurement threshold for displaying 0. If the deadband is **Enabled**, readings below 18 fpm (0.0914 m/s) or 18 cfm (30.58 m^3/h, 8.49 l/s) will be displayed as 0. If the deadband is **Disabled**, readings down to 0 will be displayed. The default is set to **Enable**.
Headphone Input	The Headphone Input on the side of the meter can be either **Enabled** or **Disabled**. When set to **Enabled**, the meter will default to Capture Hood mode when the base switch is connected. When set to **Disabled**, the meter will not respond to the base switch input.

Use the arrow keys to select an option or to change the settings for each option. Press the ↵ key to accept settings.

Data Logging

Measurements

Measurements to be logged to memory are independent of measurements on the display, and must therefore be selected under **DATA LOGGING → Measurements**.

- When set to **ON**, measurement will be logged to memory.
- When set to **DISPLAY**, measurement will be logged to memory if it is visible on the main running screen.
- When set to **OFF**, measurement will not be logged to memory.

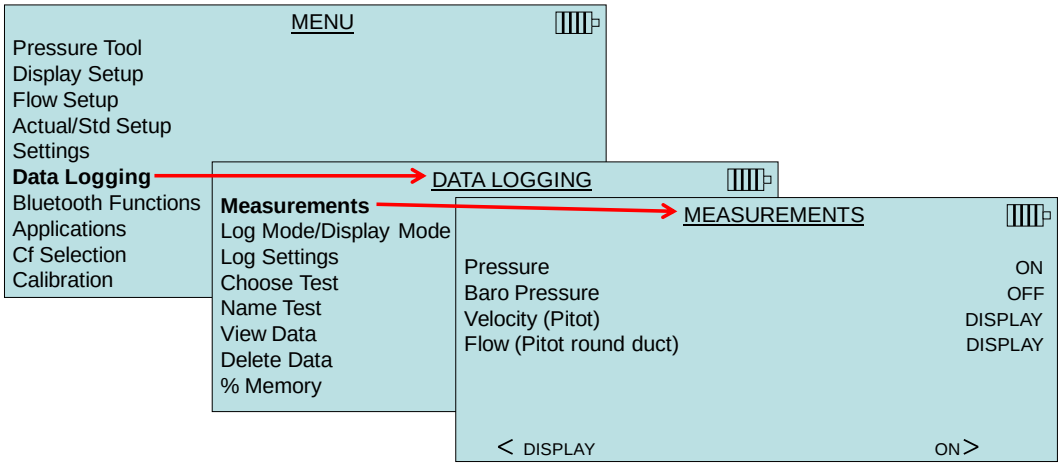

Log Mode/Display Mode

The instrument can be programmed to store measurements to memory in several different logging formats:

Log Mode/ Display Mode	Display	Data Logging	Recommended Usage
Manual/Single	Single measurement	Single sample initiated and manually saved by user	Pressure Tools
Manual/RunAvg	Continuous measurement	Running average readings manually saved by user	Pressure Tools *Default for Capture Hood tool
Auto-save/RunAvg	Continuous measurement	Samples are automatically logged to memory at the end of the sampling period	Thermoanemometer
Cont-key/Run/Avg	Continuous measurement	Unattended logging to track trends	Thermoanemometer, Pressure Only
Cont-time/RunAvg	Continuous measurement	Unattended logging to track trends	Thermoanemometer, Pressure Only

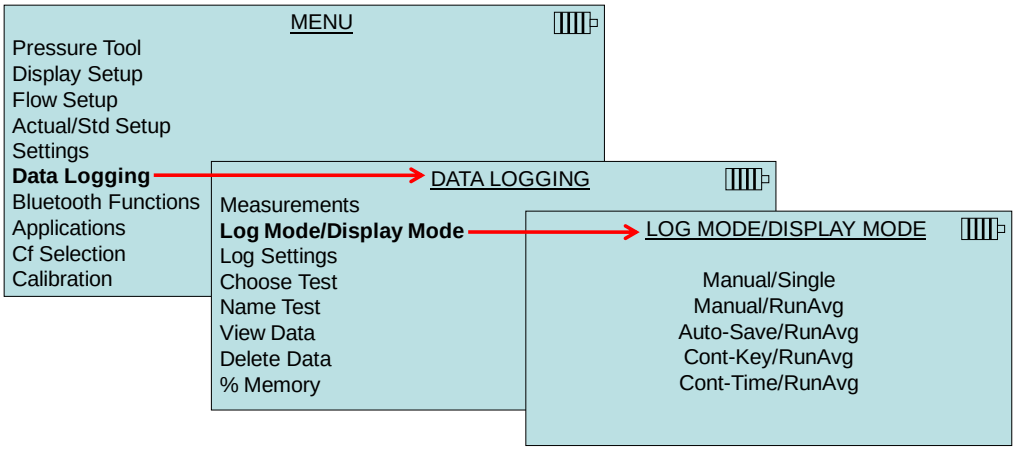

The **Manual/Single** mode is a single reading that manually needs to be saved or discarded by the user. In this mode, the EBT meter will show **----** and **READY**. When the **READ** key is pressed, the instrument will start to take a reading with a duration based on the **Time Constant setting**. When the countdown is complete, a reading will be displayed:

- This reading can be saved by pressing the **SAVE** or **↵ key**.
- The reading can be discarded by pressing **ESC**.
- Pressing **READ** will discard the current measurement and the meter will start taking a new sample.

Manual/RunAvg

In the **Manual/RunAvg** mode, the current reading is displayed at all times as an averaged reading. Pressing **READ** or the RED switch on the base will freeze the current sample measurement.

- Press **SAVE** to save the sample and return to the measuring mode.
- **ESC** will unfreeze and return to the measuring mode.

- Pressing **SAVE** anytime in the running mode will save the current sample and continue measuring.

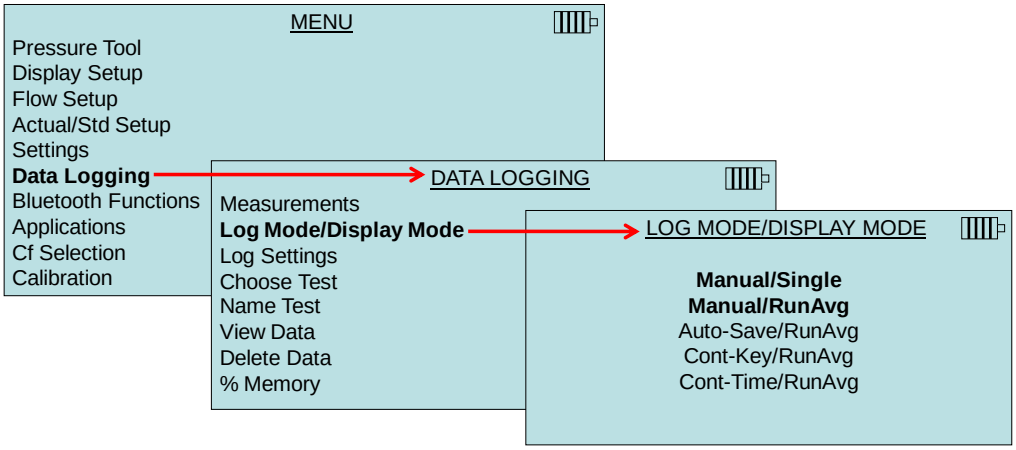

Auto-Save/RunAvg Logging

In **Auto-Save/RunAvg** mode, the user samples are automatically logged to memory at the end of the sampling period. To start logging, press the ↵ key. The Auto-Save/RunAvg mode is recommended when using the optional thermoanemometer probes.

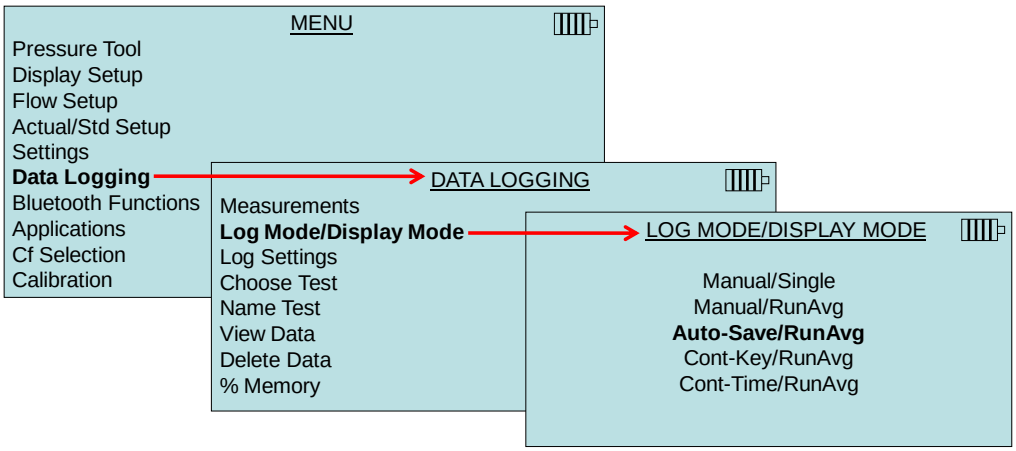

When set to **Auto- Save/RunAvg**, the Sample Time can be adjusted. Sample Time is the time period over which the Sample will be averaged. Use the arrow keys to make changes and press ↵ to accept.

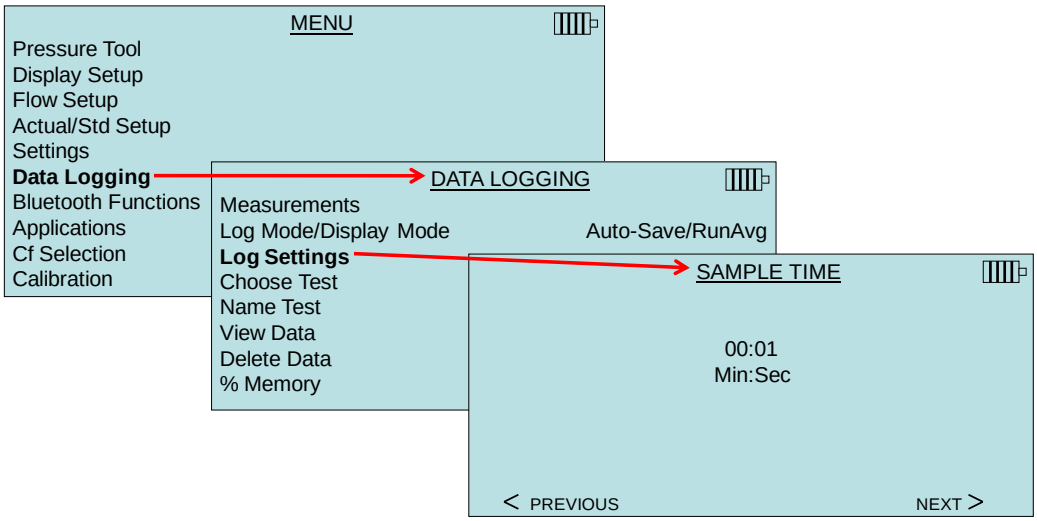

Cont-key Logging

In **Cont-key** mode, the user starts logging by pressing **SAVE** or ↵. The instrument will continue logging until ↵, **SAVE** or **ESC** is pressed is pressed again. This mode would be used for long term data logging.

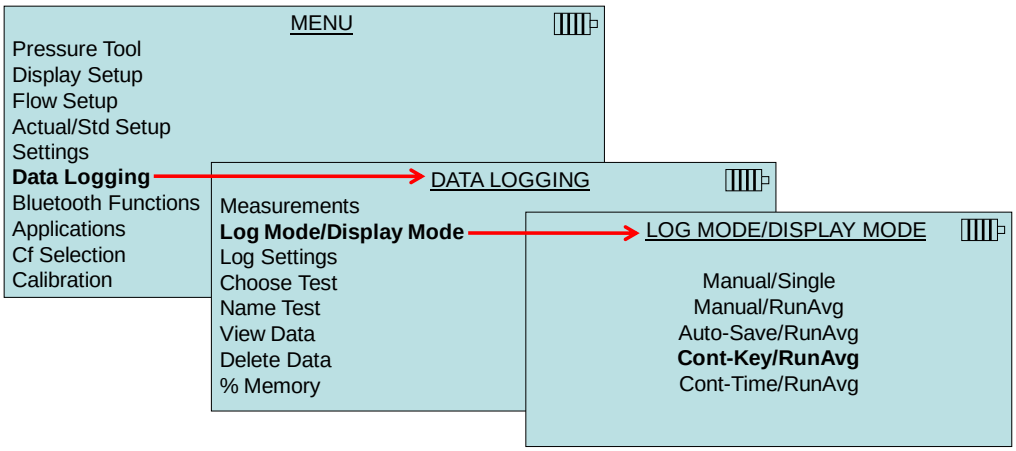

When set to **Cont. key**, the log interval can be adjusted. Use the arrow keys to make changes and press ↵ to accept.

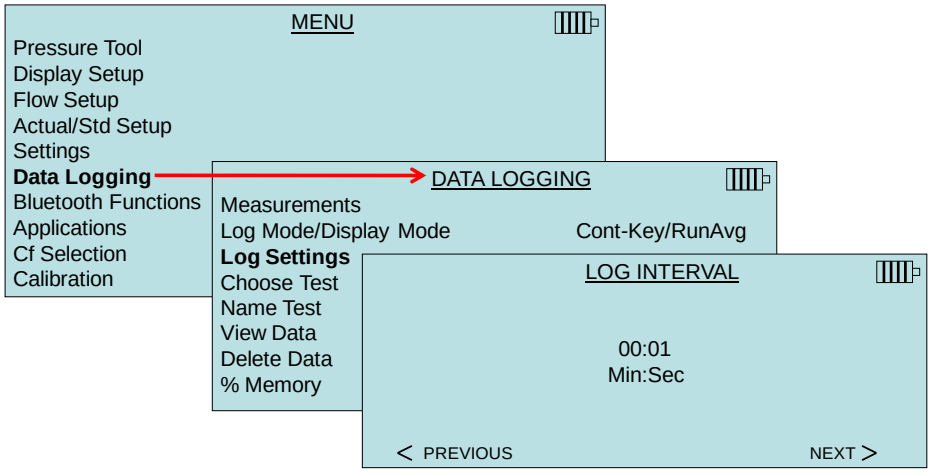

Cont-Time/RunAvg Logging

In **Cont-Time/RunAvg** mode, the user starts taking readings by pressing **SAVE** or ↵ . The instrument will continue taking samples until the time as set in “Test Length” has elapsed or **ESC**, **SAVE** or ↵ is pressed.

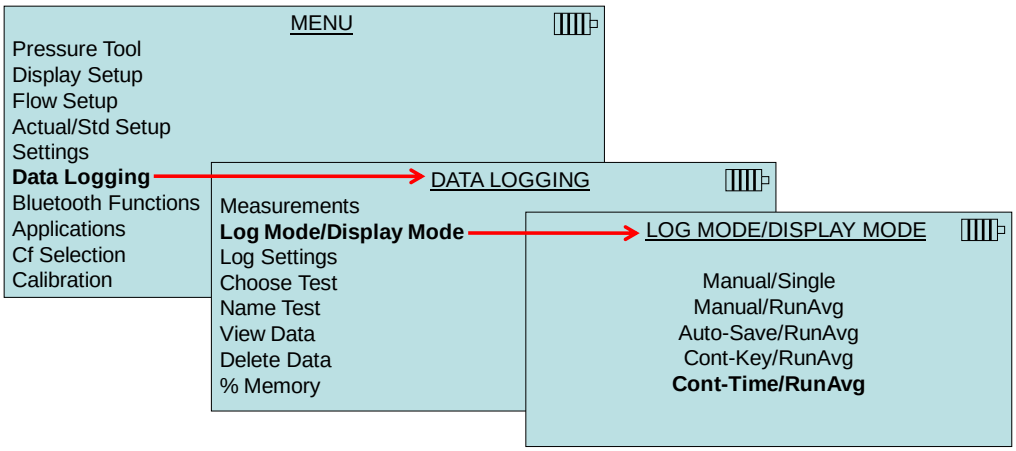

When set to **Cont.-time**, the log interval and test length can be adjusted.

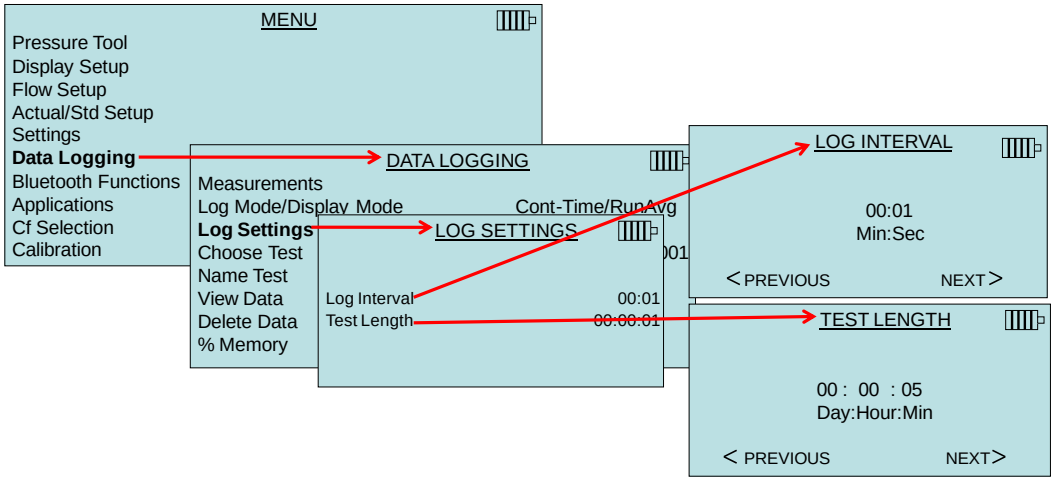

Choose Test

Test IDs consist of a group of Samples that are used to determine statistics (average, minimum, and maximum) of a measurement application**.** The instrument can store 26,500+ samples and 100 test IDs (one sample can contain multiple measurement parameters such as flow and temperature)**.** Example: Each duct traverse will have its own Test ID consisting of several Samples**.**

Pressing **NEW** will advance to the next available Test ID. Pressing **DATES** will list the date the Test was taken.

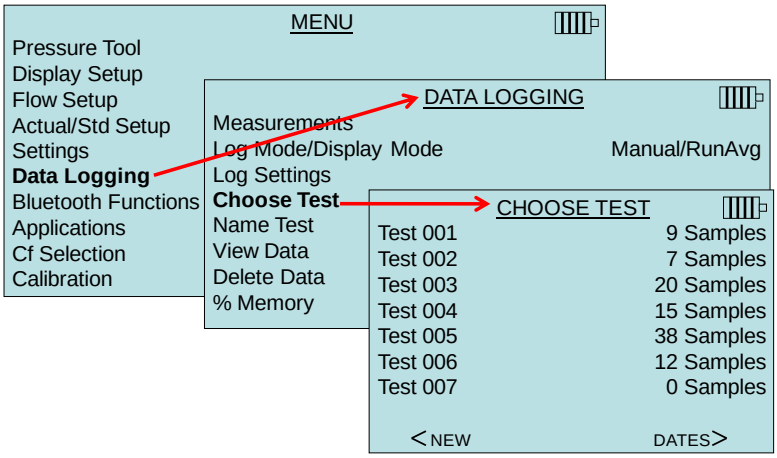

Name Test

This option allows for customizing the Test ID name using eight (8) characters maximum. Use the arrow keys to move the cursor to a desired location, press ↵ to accept. Repeat until the desired name appears. Press **SAVE** to store custom ID name.

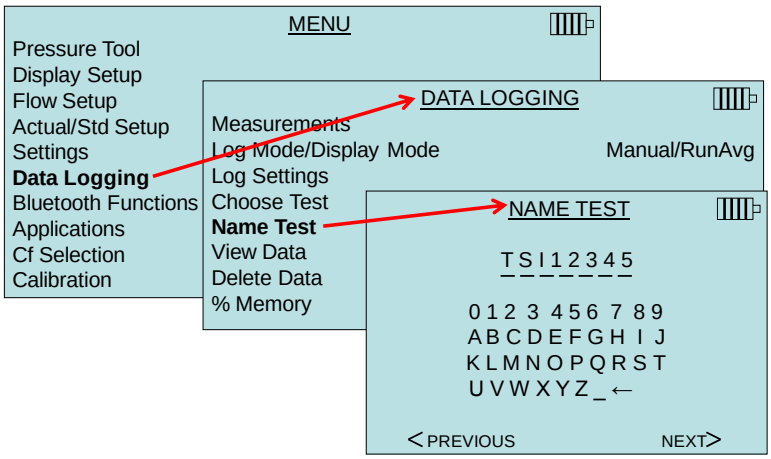

View Data/Choose Test

To view stored data, first select the Test ID that contains the data to be recalled. This is accomplished in the **Choose Test** menu.

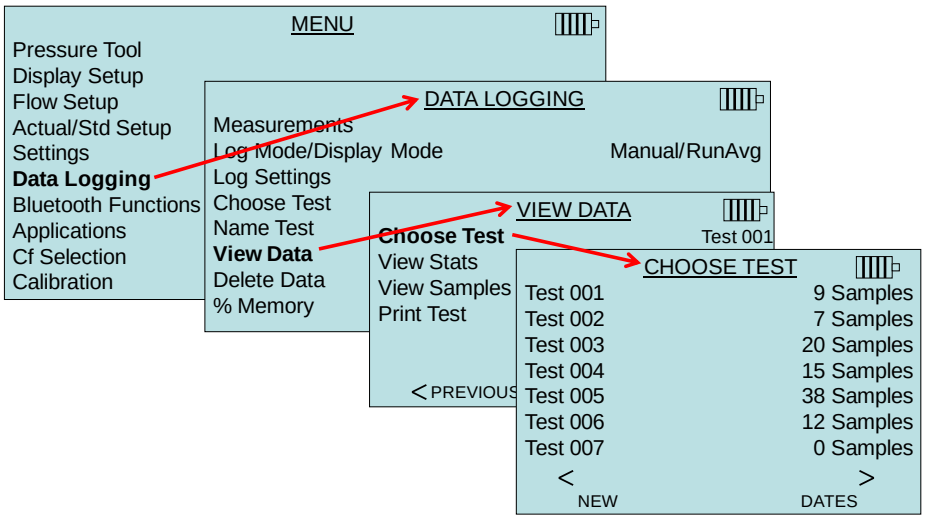

View Stats

Displays statistics (average, minimum, and maximum) of a selected Test ID and the number of samples, date and time the samples were taken.

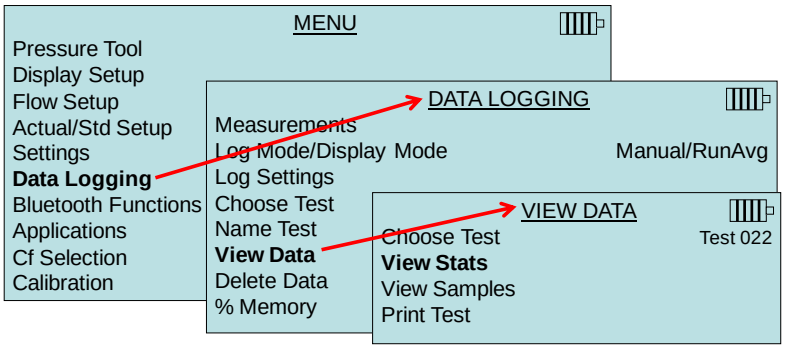

Use the ➤ and ➤ arrow keys to view statistics of all the measurement parameters stored in a Test ID.

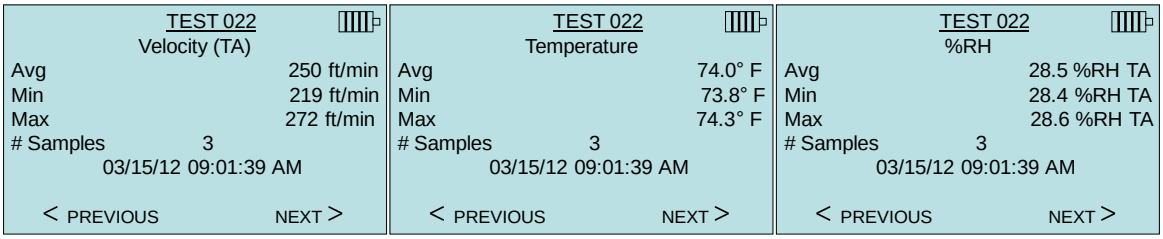

Example: TEST 022 has three (3) samples, each sample consists of a velocity, temperature, and relative humidity reading. Use the **<** or **>** keys to view statistics of each measurement parameter.

View Samples

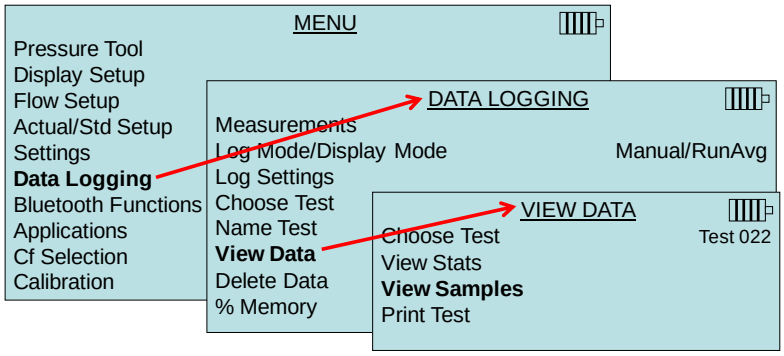

Use the ⮜ and ⮞ arrow keys to view samples of all the measurement parameters stored in a Test ID.

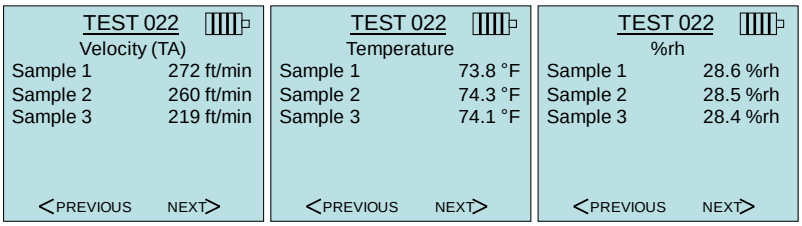

The meter can send this data to the optional Model 8934 wireless printer or PC capable of Bluetooth communications. To use the **PRINT** key, Bluetooth communications must be established between the meter and the Model 8934 wireless printer or PC set up with Bluetooth communications.

Print Test

Press ↵ to print all statistics and samples for the selected Test ID.

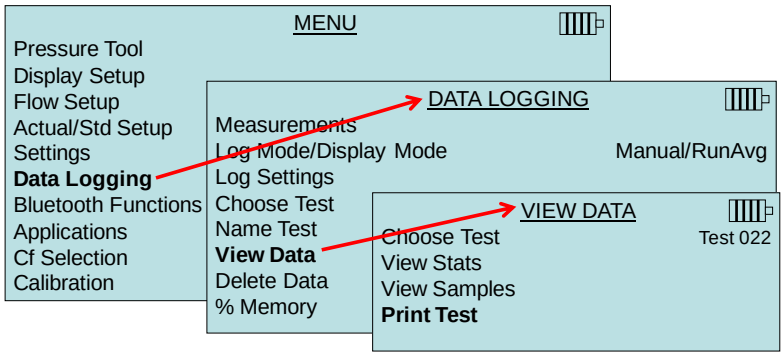

The meter can send this data to the optional Model 8934 wireless printer or PC capable of Bluetooth communications. To use the **PRINT** command, Bluetooth communications must be established between the meter and the Model 8934 wireless printer or PC set up with Bluetooth communications.

For more information on establishing Bluetooth connections, refer to TSI Applications Note TSI-150.

Delete Data
Use this menu item to delete all data, delete test or delete a sample.

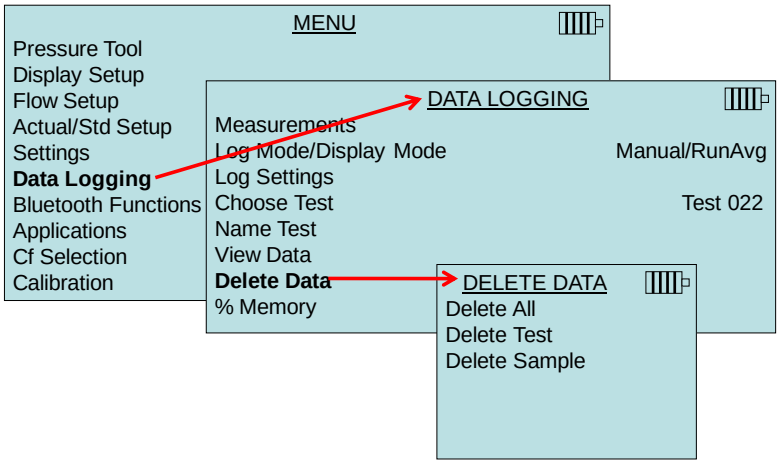

Delete All will clear stored data in all Test IDs.

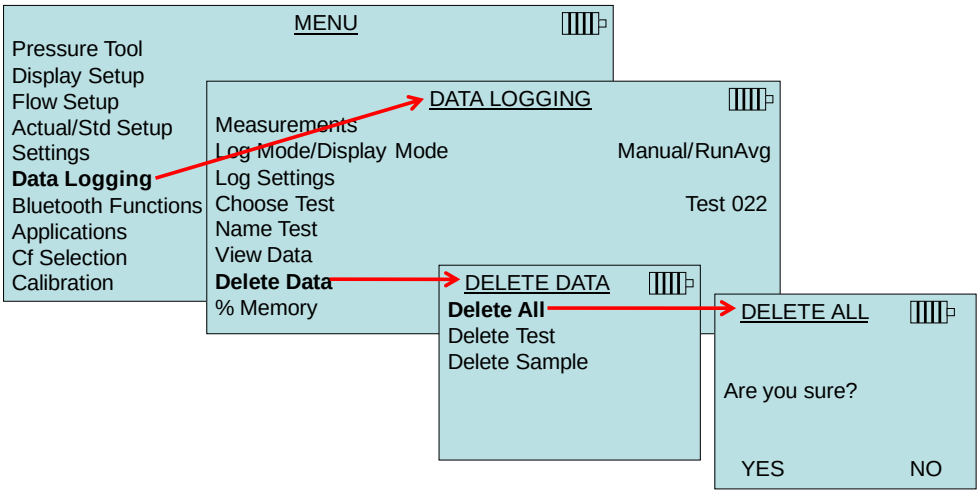

Delete Test will clear stored data in an individual Test ID selected by the user.

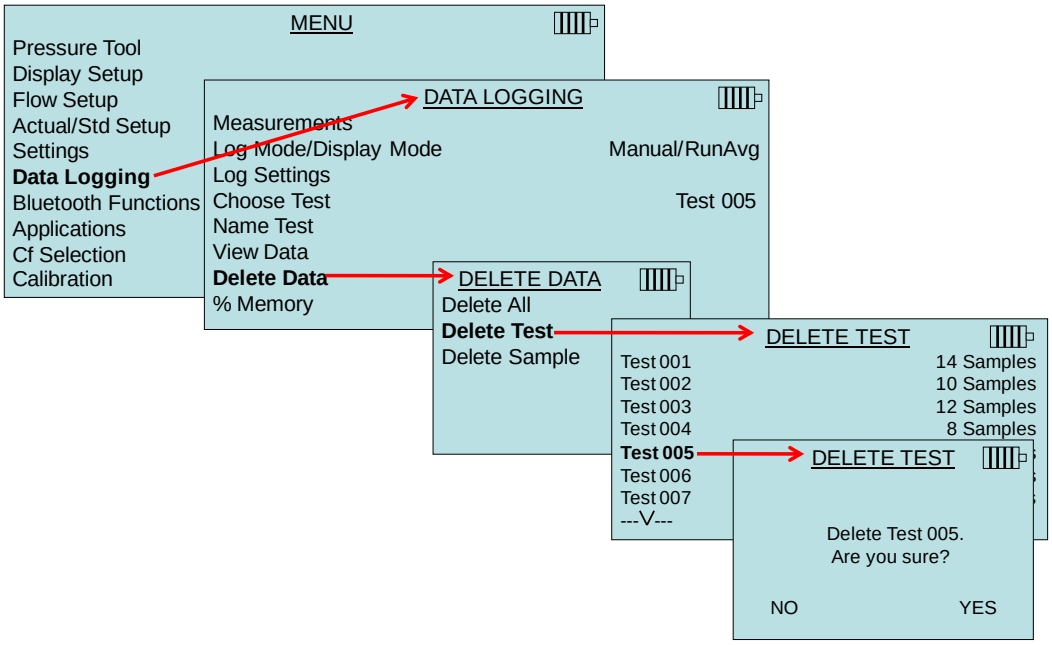

Delete Sample will clear the last sample in an individual Test ID selected by the user.

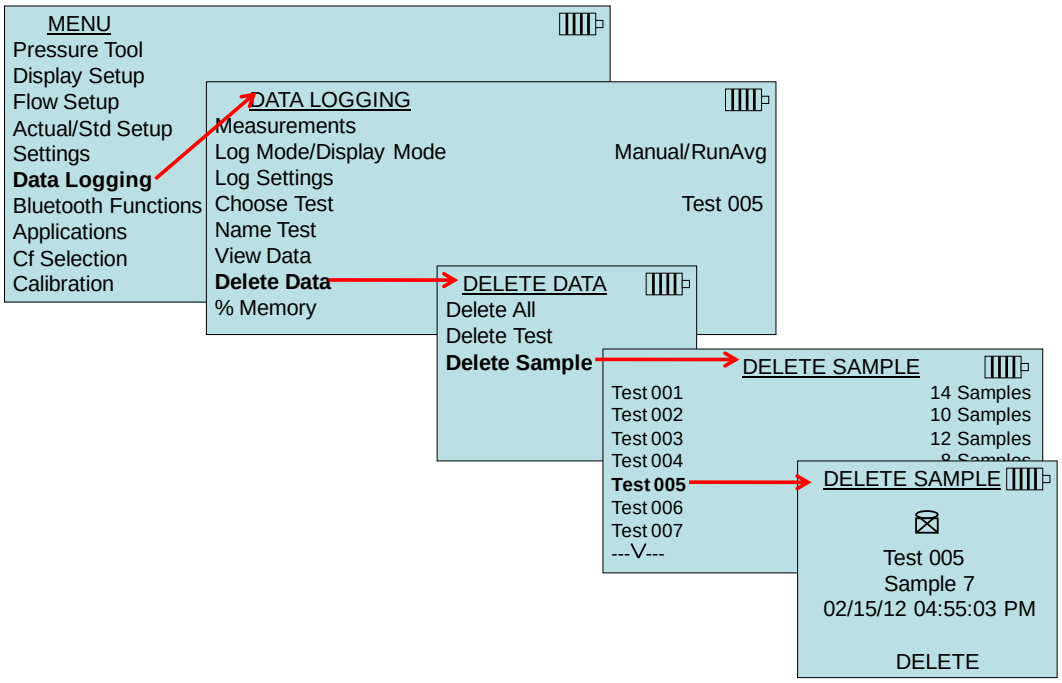

% Memory
This option displays the memory available. **Delete All**, under **Delete Data**, will clear memory and reset the memory available to 100%.

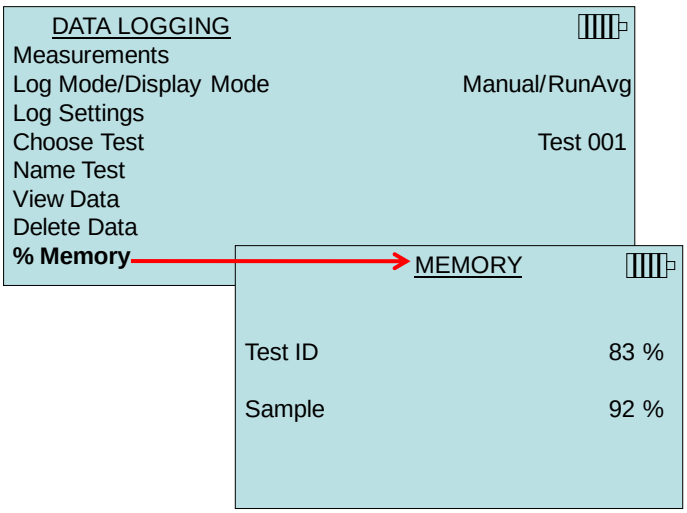

Bluetooth Functions

The meter contains a Bluetooth Functions menu which is used to adjust parameters to assist with wireless connections to other Bluetooth capable devices.

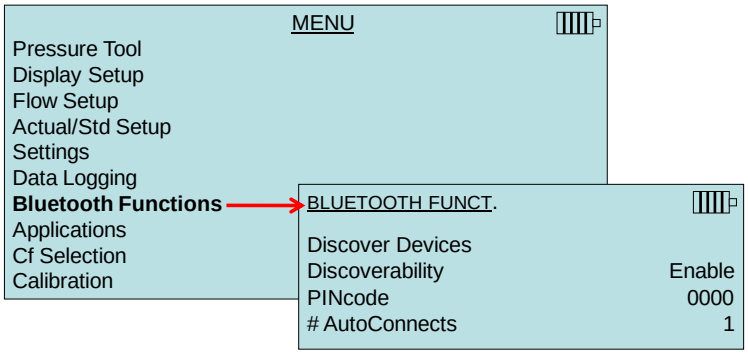

Discover Devices
Start the Bluetooth process of finding other devices from the meter.

Discoverability
Describes whether another device can discover the meter. Options include:

Disable	The instrument is not discoverable by other devices.
Temporary	Allows the instrument to be discoverable until another device pairs with it or until the instrument power is turned off and back on.
Enable	Makes the instrument discoverable indefinitely.

PINcode
The PINcode is a security key to be entered into the computer if prompted. The factory default PINcode is **0000**.

Note
PINcode must be set to **0000** in order to use 8934 printer.

 # AutoConnects
Specifies how many times the instrument will attempt to reattach to a paired device after the power is turned on. For this option, the instrument Discoverability setting must be enabled. Settings are 0 to 5 times.

For more information on establishing Bluetooth connections to a PC or 8934 printer, refer to TSI Applications Note TSI-150.

Applications

This menu option includes specialized measurement protocols used to perform various tests or investigations. Applications include Heat flow, Turbulence and Log-Tchebycheff Duct Traverse. For more information on these applications, refer to the following information:

- Heat Flow: calculates heat flow by making temperature, humidity, and flow measurements upstream and downstream of the coil in the duct. Requires thermoanemometer probe 964 or 966. See Application Note TSI-124 for more information.
- Turbulence Intensity: turbulence intensity is a scale characterizing turbulence expressed as a percent. Requires thermoanemometer probe 960, 962, 964 or 966. See Application Note TSI-141 for more information.
- Log Tchebycheff (Tcheb) Duct Traverse: See below.

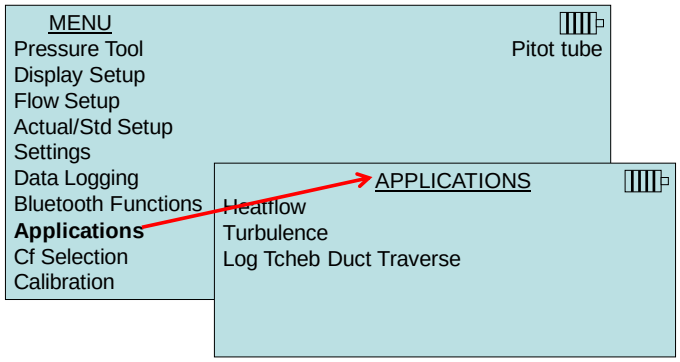

Log Tcheb Duct Traverse
The Log Tchebycheff duct traverse is a method of determining the average air velocity or air volume within round or rectangular ductwork. This application will show the round or rectangular duct on the display along with the number of sample points with insertion depth (inches or millimeters). For more information on this application and where to take the samples, refer to Appendix B of this manual.

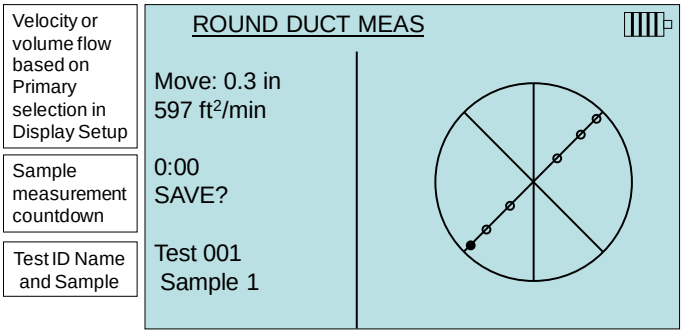

To input round or rectangular duct dimensions, refer to the Flow Setup section of this manual.

The instrument operation can be configured three different ways depending on what is selected as the LogMode/DisplayMode selection found in the data Logging menu:

If LogMode/DisplayMode is set to Manual/Single:

- Meter will display **READY**
  - Press **READ** to initiate measurement
  - Sample countdown (based on the Time Constant setting) will be displayed
- When Sample countdown is complete:
  - Press **SAVE** to store the measurement sample
  - Press **ESC** to discard and repeat measurement
- When Sample is saved, meter will prompt user to move probe to the next sample point

If LogMode/DisplayMode is set to Manual/RunAvg:

- Meter will continuously display a reading
- User can press **SAVE** at any time
  - Meter will store sample and prompt user to move probe to the next sample point

If LogMode/DisplayMode is set to AutoSave/RunAvg:

- Meter will continuously display a reading
- User can press **SAVE** at any time
  - Sample countdown (based on the Sample Time) will appear
  - When countdown is completed, measurement will be stored to memory and user will be prompted to move probe to next sample point.

At anytime during the duct traverse, user can press **STATS** to display statistics of current traverse (Test ID).

	C A U T I O N
	Do ***not*** exit the application while in the middle of the traverse. You will be unable to return and complete the remaining test points. The traverse will need to be repeated.

Calibration Factor (Cf) Selection

The correction factor is an offset that can be applied to the velocity measurements when using the AF Probe, Pitot tube and Velocity Matrix or flow when using the Capture Hood. An offset of ±50% (0.50 to 1.50) can be applied to the measurement.

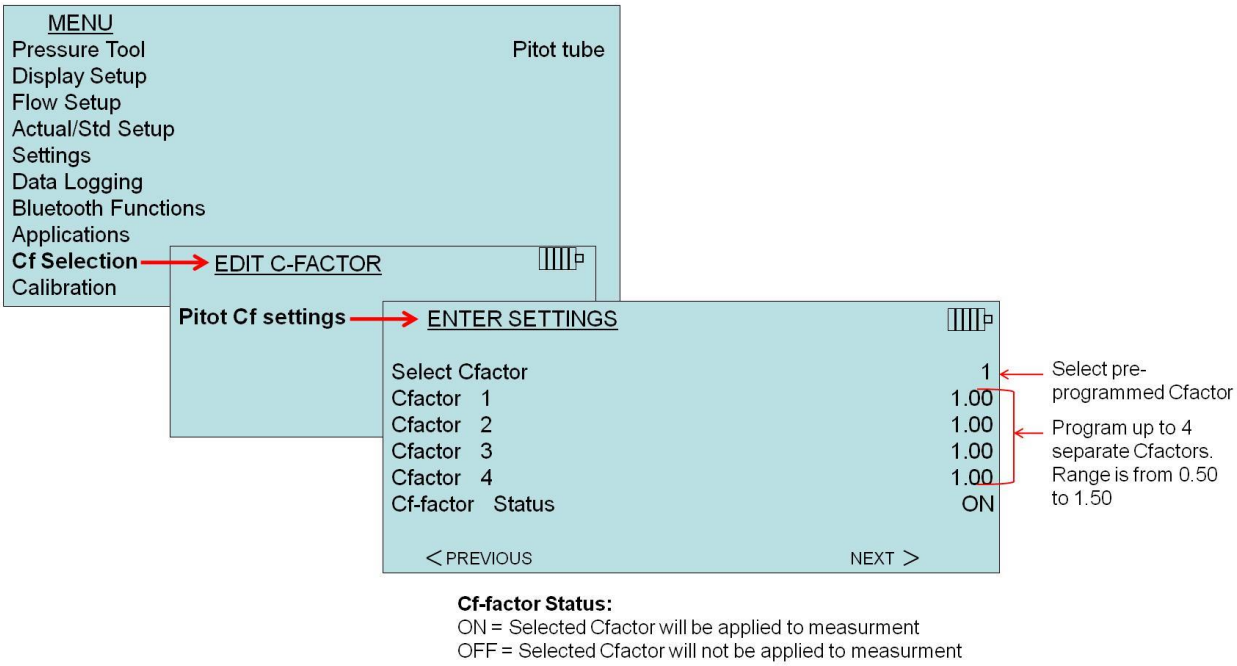

Depending on what is selected as the **Pressure Tool** will determine what measurement tool is displayed on the **Cf Selection** screen.

Note
Calibration factors are not available for the Pressure Only or Flow/K-factor tools.

Calibration

The Calibration Menu lists measurement parameters that can be adjusted in the field. The appropriate detachable probes must be attached to the meter before field calibration can be undertaken except for pressure and barometric pressure calibration.

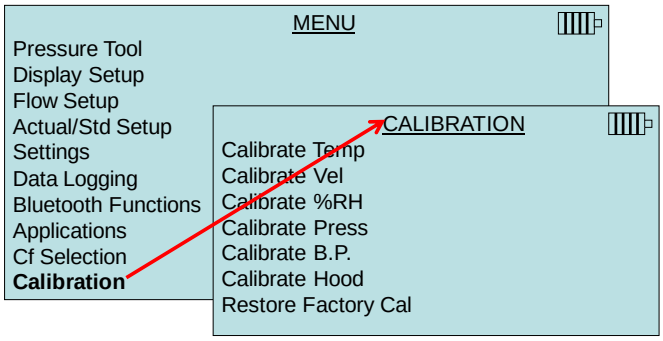

Printing Data Using the Portable Printer

To print logged data, first enter the DATALOGGING menu. Then, use the **CHOOSE TEST** item to select the data to be printed. After the test is selected, use the **VIEW STATS** and **VIEW SAMPLES** items to select statistics or individual data points to view and print. After selecting **VIEW STATS** or **VIEW SAMPLES**, press the **PRINT** key to print the data.

LogDat-CH™ Downloading Software

The instrument also includes downloading software called LogDat-CH. LogDat-CH software transfers the stored data from the meter to a computer as a spreadsheet file. This software is useful for applications such as duct traverses, fume hood, and filter face velocity testing.

Follow the instructions on the label of the LogDat-CH software to install the software on your computer. The software is shipped on a CD-ROM and includes a User's Guide and Installation Instructions. Updates are available from the TSI website at http://www.tsi.com/SoftwareDownloads.

To download data from the EBT, connect the supplied computer interface USB cable to the EBT and to a computer USB port. Any USB port can be used.

(This page intentionally left blank)

Chapter 5. Changing Capture Hoods

This chapter identifies the flow hood parts and gives instructions for assembling the flow hood.

Capture Hood Parts Identification

Figure 15 identifies the major parts of the capture hood, which are described in the following paragraphs. Before using the hood, please familiarize yourself with the various parts. You may also refer to Tables 1 through 3.

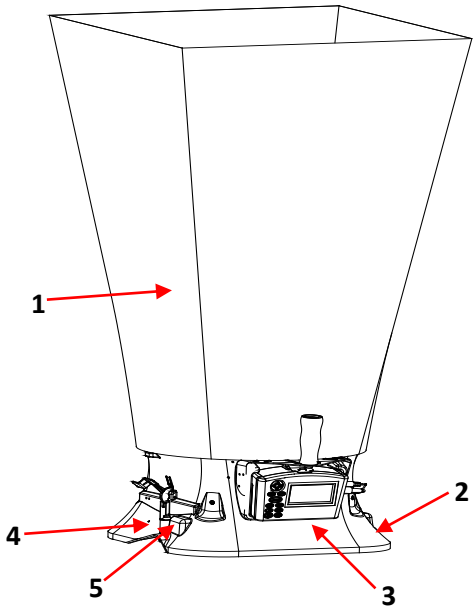

1 Fabric hood - Basic hood assembly
2 Base allows micromanometer to be attached
3 Micromanometer with display
4 Flap Actuator
5 Read Switch

Figure 15: Flow Hood Components

Capture Hood Assembly

The Capture Hood is shipped from the factory partially assembled with the 2 ft × 2 ft (610 mm × 610 mm) nylon hood attached to the base. If you wish to use another hood size, see "Changing Capture Hoods".

To complete the assembly of the 2 ft × 2 ft (610 mm × 610 mm) hood, follow these six steps:

1. Place the base of the capture hood on the floor.
2. Lift the top of the fabric. Insert one end of a support pole into its pole mount in the base. There is a cup in each corner of the frame to accept the other end of each support pole.
3. Grasp the support pole. Bend the pole slightly to insert the top end of the pole into the support pole cup located in the opposite corner of the fabric frame. The poles are connected to the frame corners in a crisscross fashion as shown in Figure 16.

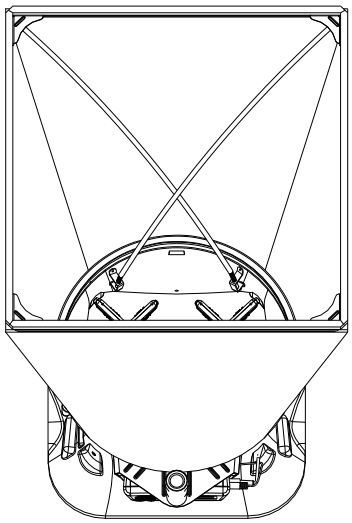

Figure 16: Installing a Support Pole

4. Insert the second support pole into the pole mount on the opposite side of the base.
5. Repeat step 3 for the second support pole.
6. Repeat steps 4 and 5 for the remaining two support poles.

Four other hood sizes are available from TSI and can be purchased separately. Available hood sizes are identified by the dimensions of the frame structure at the top of the hood and include 2 ft × 4 ft (610 mm × 1220 mm), 1 ft × 4 ft (305 mm × 1220 mm), 1 ft × 5 ft (305 mm × 1525 mm) and 3 ft × 3 ft (915 mm × 915 mm).

To change hood sizes, first remove the hood currently attached to the base. To remove the attached hood, first unlatch the cinch belt where the fabric is attached to the base. Then remove the fabric from its frame structure by pulling the shock cord out of the aluminum frame. Finally, fold up the fabric you just removed so that it can fit into one of the accessory pockets inside the carrying case. It is a good idea to fold the fabric so that the tag identifying its size remains visible for future reference.

Alternate Hood Installation

Refer to Figures 17 through 20 to determine the frame channels needed to assemble any of the standard sized frames. Select the pieces required for the frame size desired and assemble with the aid of the appropriate figure. Each channel is labeled with its number for easy identification. Several sections (numbers 1, 3, and 4) consist of a straight channel portion (each a different length) and a corner piece. This corner piece has an eyelet and slot arrangement which mates with a similar eyelet and slot at the end of the straight portion of the channel pieces (see Figure 17). These pieces can be slid together and are self locking by means of a retention spring. The arrangement forms a rugged frame which is additionally strengthened when the hood is attached.

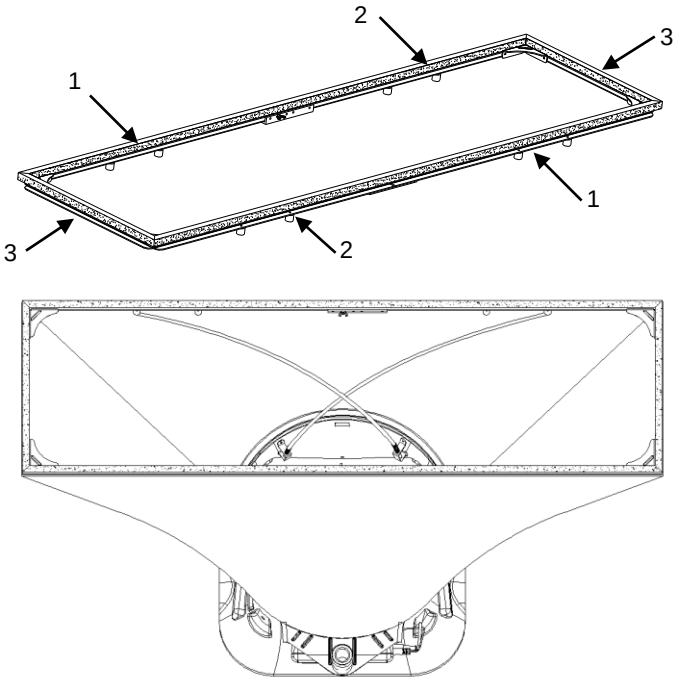

Figure 17: 1 ft × 4 ft (305 mm × 1220 mm) hood and frame. The support poles always cross as pairs at the front and back of the fabric hood. For the 1 ft × 4 ft (305 mm × 1220 mm), the support poles are inserted into the outside ferrule locations.

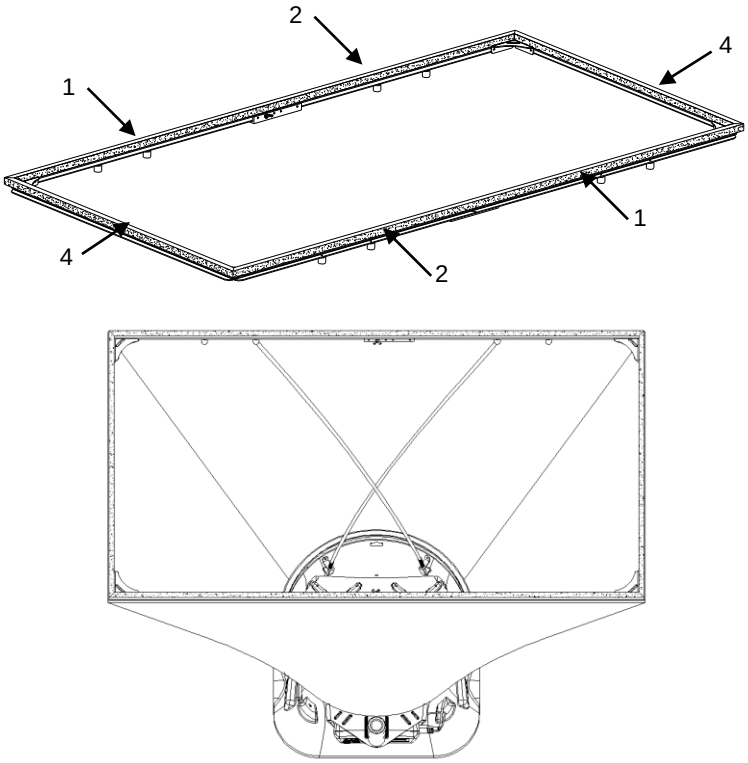

Figure 18: 2 ft × 4 ft (610 mm × 1220 mm) hood and frame. The support poles always cross as pairs at the front and back of the fabric hood. For the 2 ft × 4 ft (610 mm × 1220 mm), the support poles are inserted into the inside ferrule locations.

The number 1 and 5 channels also have a wing nut at the straight end which will mate with an angle and studs on the ends of numbers 2, 5 and 6 to form the longer frame sides (see Figure 19).

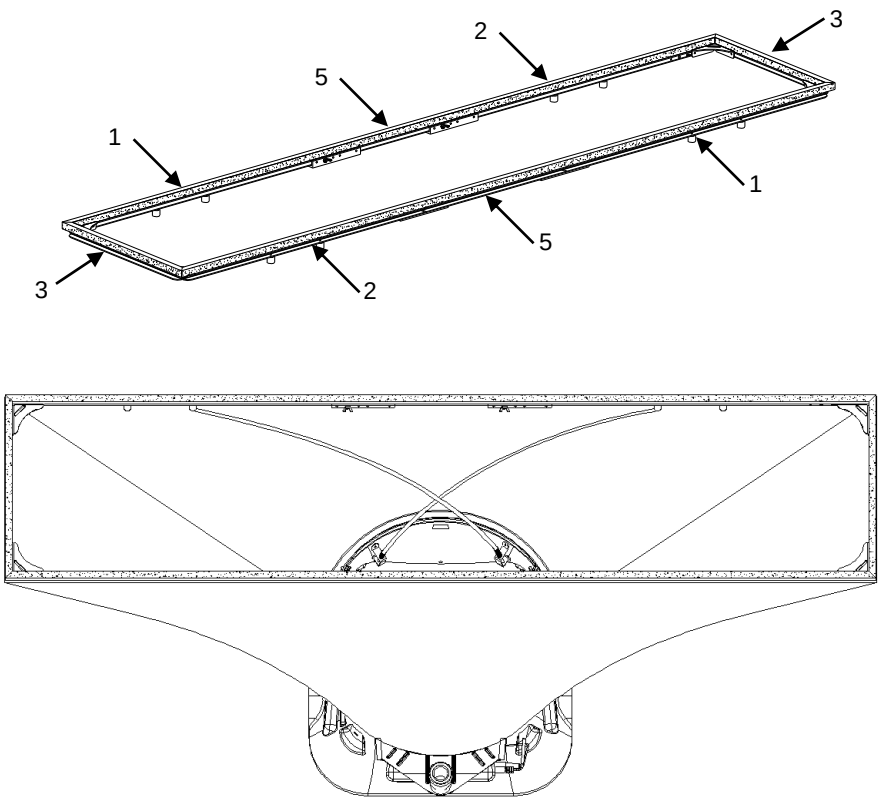

Figure 19: 1 ft × 5 ft (305 mm × 1525 mm) hood and frame. The support poles always cross as pairs at the front and back of the fabric hood. For the 1 ft × 5 ft (305 mm × 1525 mm), the support poles are inserted into the inside ferrule locations.

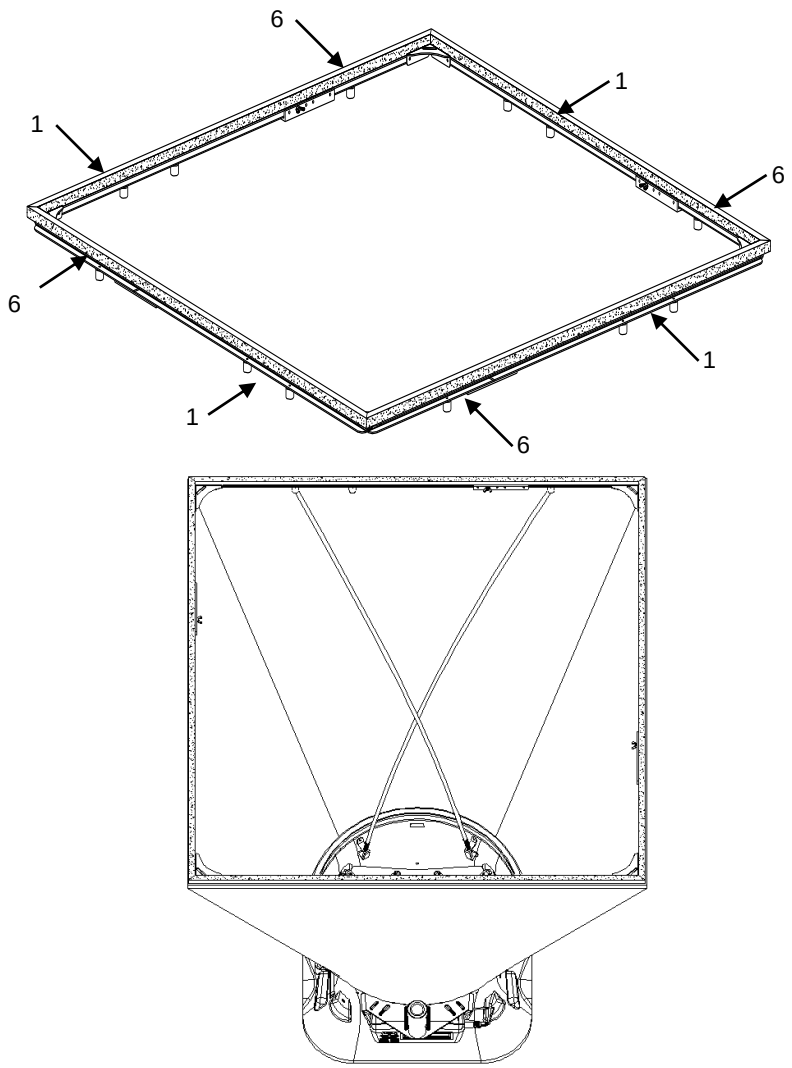

Figure 20: 3 ft × 3 ft (915 mm × 915 mm) hood and frame. The support poles always cross as pairs at the front and back of the fabric hood. For the 3 ft × 3 ft (915 mm × 915 mm), the support poles are inserted into the outside ferrule locations.

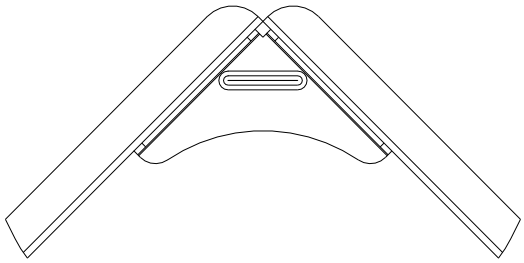

Figure 21: Frame Corner Assembly

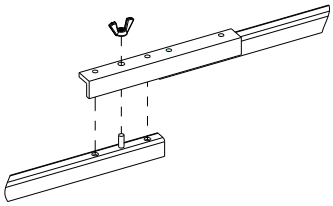

Figure 22: Frame Side Coupler Assembly

Each hood is constructed in a trapezoidal shape, sewn together so that one open end forms a round attachment to the base, and the other forms a square or rectangle large enough to fit its matching frame assembly. Around the frame end of the hood, an elastic shock cord has been sewn into the hood. This cord is of a size such that it can be pushed into the open side of the U-shaped channels of the frame.

In general, attach a hood to the frame first, and then to the base unit. By stretching around the frame corners the cord is slightly reduced in diameter and is easier to press into the frame channel.

Note
The hood corners should always be aligned with the corners of the base, near the hood support brackets. The base has rivets located in the corners which can be used as a guide for aligning the hood corners.

Direct Inflow Measurement Hood for Biological Safety Cabinets

The BSC hood kits for the models EBT731 are designed to measure the inflow or exhaust flow through a biological safety cabinet (see Figure 23). Part numbers and description of each kit can be found in Table 2 of this manual.

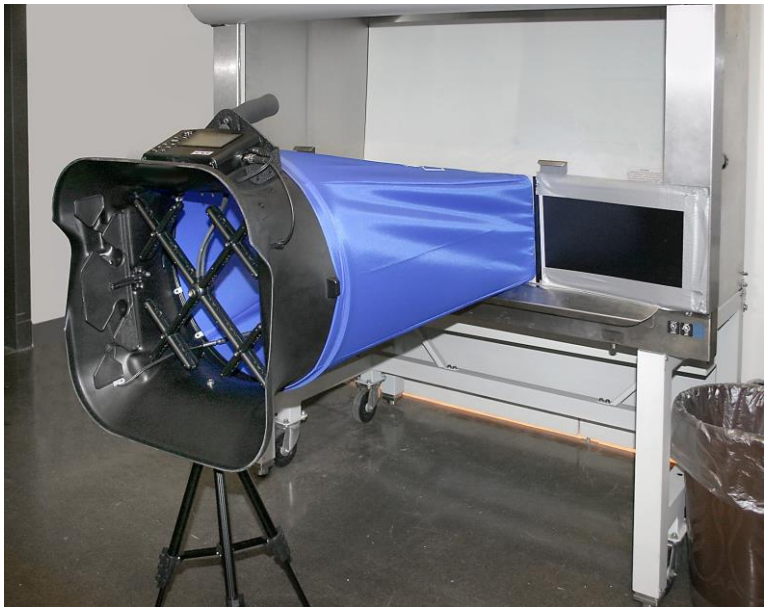

Figure 23: Direct Inflow Measurement Hood

The direct inflow BSC hood includes (see Figure 24):

- Fixed frame assembly with four removable flaps
- Fabric hood
- Hood support poles
- Base mounting hardware (threaded insert, washer, and screw)
- Telescopic pole stand with case to freely hold the capture hood in a vertical position when mounted to a biological safety cabinet or lab hood

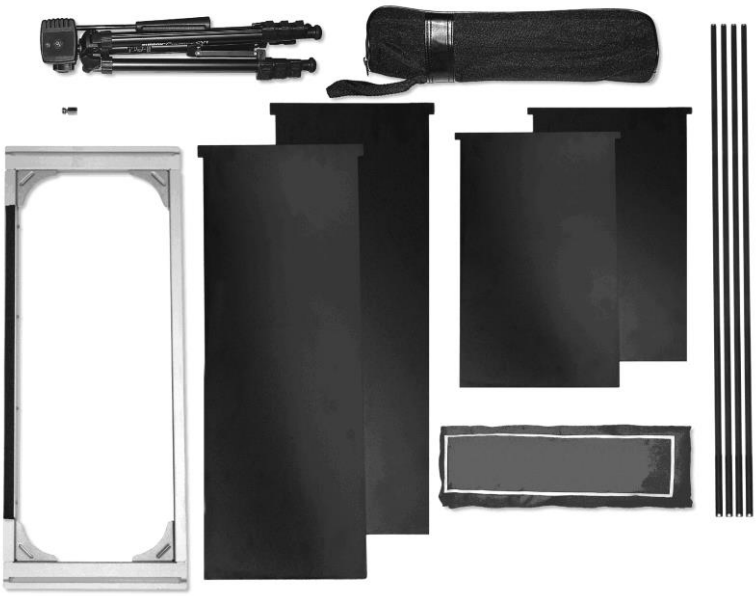

Figure 24: Direct Inflow Measurement Hood Components

To complete the assembly of the BSC hood, follow these seven steps:

1. Remove the plug located at the back of the base assembly and insert the Philips screw with washer into the hole from the inside of the base (see Figure 25). Place the threaded insert on the outside of the base opposite the screw and tighten with a Philips screwdriver.

Figure 25: Remove Plug Located at Back of Base Assembly

2. Attach the fabric hood and hood support poles to the frame and base assembly in the same manner as previously described for the other hood sizes.

3. Insert the flaps into the slots from the side of the frame where the fabric hood is attached to the U-channel of the frame (see Figure 26). Use the different flap lengths to fit various cabinet widths.

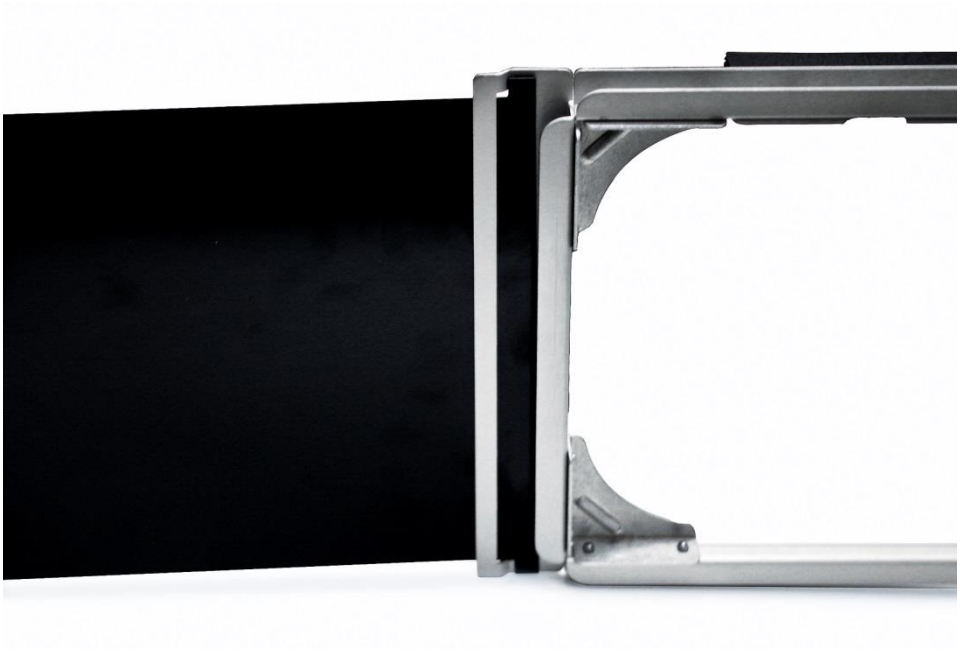

Figure 26: Attach Fabric Hood and Hood Support Poles to Frame and Base Assembly

4. Mount the capture hood base to the telescopic stand by fastening the screw on the telescopic stand to the threaded insert mounted on the base opposite the display/manometer (see Figure 27).

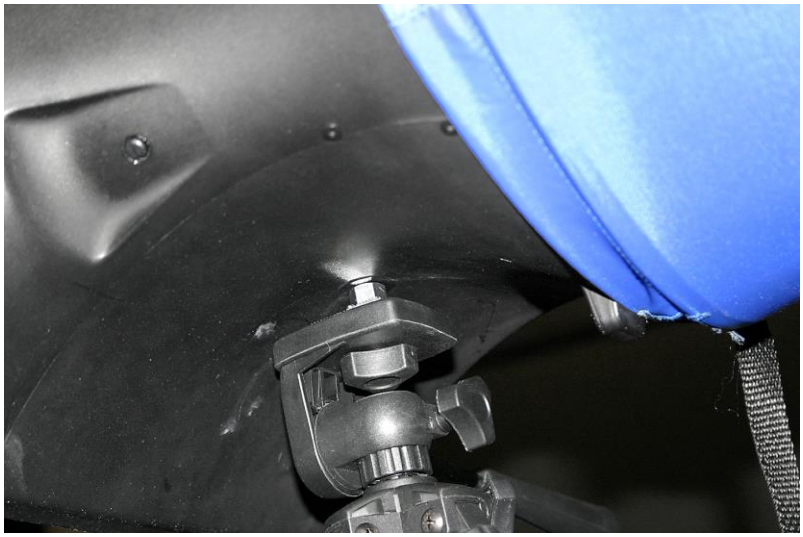

Figure 27: Mount Hood Base to Telescopic Stand

5. Adjust the height and position of the telescopic stand so that the bottom part of the hood frame rests against the cabinet opening, and the capture hood is horizontal to the cabinet (see Figure 28).

Figure 28: Adjust Height and Position of Telescopic Stand

6. Lower the sash of the cabinet until it rests on the foam lip of the hood frame (see Figure 29).

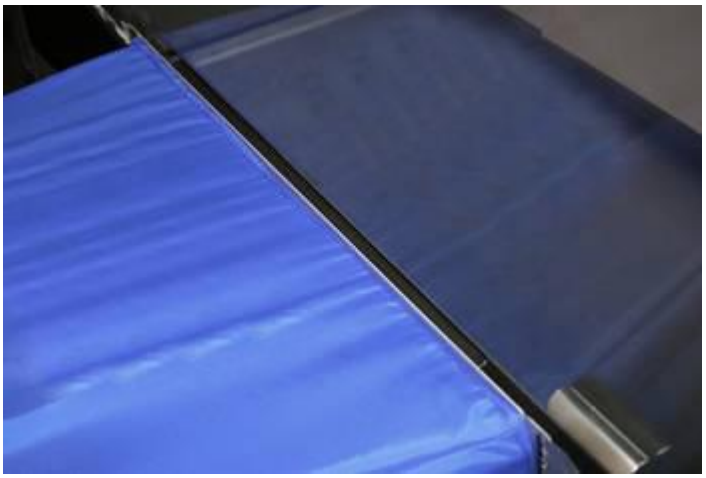

Figure 29: Lower Sash of Cabinet Until it Rests on Foam Lip of Hood Frame

7. Adjust the flaps to cover the opening of the cabinet. Tape the edges of the flaps to the sash and frame of the cabinet to create a tight fit. The unit is now ready to make measurements (see Figure 30).

Figure 30: Unit Ready to Make Measurements

(This page intentionally left blank)

Chapter 6. Flow Measurements Using the Capture Hood

There are two methods of making flow measurement using Capture Hood:

(1) Capture Hood (non-backpressure compensation).
(2) Capture Hood with backpressure compensation.

(See "Appendix A. Back Pressure," for an explanation of the implications of capture hood-induced back pressure on the measured flow.)

Supply or return flows can be measured with both methods, and return flow is indicated as a negative number. In addition, flow measurements can be performed by taking a single reading or running average (continuous) reading mode.

Note
Keep the Capture Hood in place during the entire measurement; otherwise, the reading will be in error.

	CAUTION
	WHILE USING THE BALOMETER® AIR BALANCING INSTRUMENT TO TEST AIR FLOW IN DUCTS, YOU MAY COME INTO CONTACT WITH OR BE EXPOSED TO DUST, POLLEN, MOLD, FUNGUS, OR OTHER AIRBORNE CONTAMINANTS. IF YOU ARE OR MAY BE SENSITIVE TO DUST, POLLEN, MOLD, FUNGUS, OR OTHER AIRBORNE CONTAMINANTS, **ALWAYS** USE AN APPROPRIATE MASK OR RESPIRATOR WHILE EMPLOYING THE BALOMETER® AIR BALANCING INSTRUMENT.

Single Reading Measurements

Single reading measurements are individual flow measurements initiated by pressing either the "READ" button on the meter or the red switch on the left side of the base. Depending on the flow being measured, a single reading will take one to eight seconds to complete (lower flows take longer).

Once the measurement is complete, the flow value will be displayed. Press **SAVE** to log to memory, or press **READ**, or red switch, to take a new measurement.

To measure in this mode:

1. Select **Capture Hood** or **Hood BP Comp** in the **Pressure Tool** menu.
2. Set the **Data Logging** mode to **Manual/Single**.
3. Set the **Time Constant** to 5 seconds

Running Average Measurements

In this mode, the instrument will measure continuously while displaying a running average of flow. Pressing either the **READ** key on the meter or the red switch on the base will hold the current reading. To restart the running average measurement, press the **READ** key or the red switch. The **SAVE** key can be used at any time to log to memory.

To measure in this mode:

1. Select **Capture Hood** or **Hood BP Comp** in the **Pressure Tool** menu.
2. Set the **Data Logging** mode to **Manual/RunAvg**.
3. Set the **Time Constant** to 5 seconds.

Capture Hood Measurements (non-backpressure compensated)

Non-backpressure compensated measurements can only be made with backpressure flap in the "**OPEN**" position. If the flap is closed or partially closed, the meter will display the message "**OPEN THE FLAP**".

Backpressure Compensated Measurements

In the backpressure compensated, a correction is applied to account for the change in flow due to the presence of the Capture Hood. In most cases, backpressure compensated measurements will provide the most satisfactory flow measurement results, especially when the flow is greater than 500 ft^3/min (850 m^3/hr, 235 l/s).

Make sure that "Capture Hood Back with Pressure Compensation" is selected from the Pressure Tools menu.

Backpressure compensated measurement require two sequential measurements: first with the back pressure flap "**OPEN**" and then with the flap "**CLOSED**".

Follow the sequence of operation as described below:

1. Place the Capture Hood over the diffuser, grill or other opening through which you wish to make a measurement.
2. Open the backpressure flap. This is done by pressing up on the flap handle with your left hand as you hold the hood in place. Press until the flap clicks into full open position.
3. Press the red switch. The message "**OPEN**" will be displayed as the meter takes the reading. (In very low flows, this step and step 5 may take up to eight (8) seconds each. Higher flows will require less time.)
4. Wait for the message "**CLOSE FLAP**" then close the flap by pulling down on the flap handle until it clicks into the fully closed position.
5. Press the red trigger button. The message "**CLOSED**" will be displayed as the meter take the reading.
6. The backpressure compensated measurement value will appear and remain on the display until another reading is initiated, or other meter function is initiated. To log reading to memory, press **SAVE**.

Note
It is important that the capture hood see the same flow for both parts of the backpressure compensated flow measurement. It is best to keep the Capture Hood in place for both measurements, but it is alright to remove and replace the Capture Hood between the two readings. However, if the flow is changed or changing between the two measurements, the measurement results will be inaccurate.

“ERROR” Display

For the backpressure compensation measurement to be meaningful, the measurement in the flap “**OPEN**” position must be higher than the measurement in the flap “**CLOSED**” position. If this is not true, the EBT meter will display an error: backpressure open greater than closed.

(This page intentionally left blank)

Chapter 7. Maintenance and Troubleshooting

The Electronic Balancing Tool EBT730/EBT731 is designed for long-term field use. If used with reasonable care, it should be able to make precise measurements over a long time period. Some of the components can be cleaned periodically. When cleaning the components, please follow the instructions given below.

Fabric Hood

The hoods can be washed with mild detergent and cold water. When washing the hood, keep the hood away from objects with sharp corners or sharp edges. Careless cleaning may cause damage.

If the fabric gets ripped it should be replaced or repaired. Duct tape can be placed over the rip on both sides of the fabric for temporary repair.

To replace a damaged fabric or to order a different fabric size, contact your local TSI/Alnor® products distributor. To determine who your local TSI/Alnor® products distributor is, you may call toll-free at (800) 874-2811 (USA) or (1) 651-490-2811 (International).

Micromanometer

The micromanometer case, display screen and keys can be cleaned using a damp cloth with mild detergent solution. Do **not** immerse it in water. Wipe the unit dry before use.

Manifold

If you observe the flow sensing taps of the manifold becoming clogged with dust or other material, clean them with a damp cloth. The manifold should be kept in place during cleaning. Do **not** apply excessive forces on the grid of the manifold. If any part of the grid is damaged, please contact Customer Service for repair information.

Cases

If the instrument case or storage case needs cleaning, wipe it off with a soft cloth and isopropyl alcohol or a mild detergent.

Calibration

TSI recommends an annual calibration for the instrument. For a nominal fee, we will calibrate the unit and return it to you with a certificate of calibration and NIST traceability. This “annual checkup” assures you of consistently accurate readings. To calibrate the instrument, please ship the complete package that includes the meter, the base, the manifold and any fabrics used. Everything should be packed carefully within the carrying case and then inside a shipping box. The original shipping box is preferred. Before sending your instrument for calibration or repair, obtain a Return Material Authorization (RMA) number by visiting our website at http://rma.tsi.com or contacting customer service. When obtaining an RMA number, you will also learn the cost of service or calibration and receive shipping instructions.

Table 4 list the symptoms, possible causes, and recommended solutions for common problems encountered with the instrument. If your symptom is not listed, or if none of the solutions solves your problem, please contact the factory.

Table 4: Troubleshooting the Instrument

Symptom	Possible Causes	Corrective Action
No display	Unit not turned on. Low or dead batteries. Dirty battery contacts. AC adapter not connected.	Press I/O key. Replace the batteries. Clean the battery contacts. Plug in AC adapter.
“ ” flashing on display	Low battery charge. Dirty battery contacts.	Replace or recharge the batteries. Clean the battery contacts.
“888888” flashing on display	The pressure is too high to measure. This same display is shown if measuring velocity or flow and the pressure at that velocity is too high.	The maximum pressure is shown on the specifications page.
------ will appear on the display for velocity or volume	A valid temperature is needed to perform the standard or actual velocity/volume correction	Verify a probe that measures temperature is connected to the meter, or set “Temp Source” to “Entered” in the Actual/Std menu and manually input temperature.

Appendix A. Back Pressure

The quantity of air flowing through a supply diffuser or a return grille is reduced to some extent whenever a capture hood is placed over the flow opening. The amount of flow reduction will vary depending on the combined effects of the diffuser/grille resistance, the capture hood resistance, system pressure and the flow rate.

The EBT731 capture hood features a built-in capability to make flow measurements which are compensated for the effects of the capture hood-induced back pressure. This is accomplished by taking two sequential flow measurements at a diffuser or grille, the first with the back pressure flap "**OPEN**" and the second with the flap "**CLOSED**". The resulting Backpressure Compensated Flow displayed by the meter represents the air flow through the diffuser/grille in its original state, that is, without the presence of the capture hood.

Verifying Flow Measurements

It is always the recommended practice to verify the flow measurements obtained with a capture hood by performing appropriate* multi-point, in-duct velocity traverses using a Pitot-static tube or a thermal anemometer.

We recommend the use of the Log-linear method when traversing a round duct, and the Log-Tchebycheff method when traversing a rectangular duct.

*We recommend that you refer to the most up-to-date copy of the duct traverse specification you require from an approved regulatory or professional organization.

(This page intentionally left blank)

Appendix B. Traversing a Duct to Determine Average Air Velocity or Volume

The following techniques can be used to measure air flow inside ducts, using a velocity probe or pitot-static tube. When using a pitot-static tube, the individual velocities must be calculated for each pressure reading and then averaged together. Averaging pressure with a pitot tube and then converting into velocity will give an incorrect result, especially if many readings are more than ±25% from the average pressure. Remember that for a pitot tube, velocity is proportional to the square root of pressure.

Where to Take the Measurement

In order to make air velocity measurements in a duct, it is best to measure at least 7.5 duct diameters downstream and at least 3 duct diameters upstream from any turns or flow obstructions. It is possible to do a traverse as little as 2 duct diameters downstream and 1 duct diameter upstream from obstructions, but measurement accuracy will be impaired. When measuring rectangular ducts, use this formula to find the equivalent diameter of the duct when calculating how much distance is 7.5 diameters downstream and 3 diameters upstream:

Equivalent Diameter = sq root of 4HV / Pi

Where:
H = horizontal duct dimension
V = vertical duct dimension
Pi = 3.14

It is also possible to take a single reading to measure air velocity or air volume flow in a duct, measuring in the center of the duct and multiplying the reading by 0.9 to correct for the higher velocity at the center of the duct. If conditions are very good an accuracy of ±5 or ±10 percent may be obtained this way. This method is not reliable, however, and should only be used where small duct size or other conditions do not permit a full traverse.

Traversing a Round Duct

Using the log-Tchebycheff method, the duct is divided into concentric circles, each containing equal area. An equal number of readings is taken from each circular area, thus obtaining the best average. Commonly, three concentric circles (6 measuring points per diameter) are used for ducts of 10-inch diameter and smaller. Four or five concentric circles (8 or 10 measuring points per diameter) are used for ducts larger than 10-inch diameter.

The preferred method is to drill 3 holes in the duct at 60° angles from each other as shown in Figure 31 below. Three traverses are taken across the duct, averaging the velocities obtained at each measuring point. Then the average velocity is multiplied by the duct area to get the flow rate. (A different method uses 2 holes at 90° from each other, decreasing the number of traverses with the probe by one.)

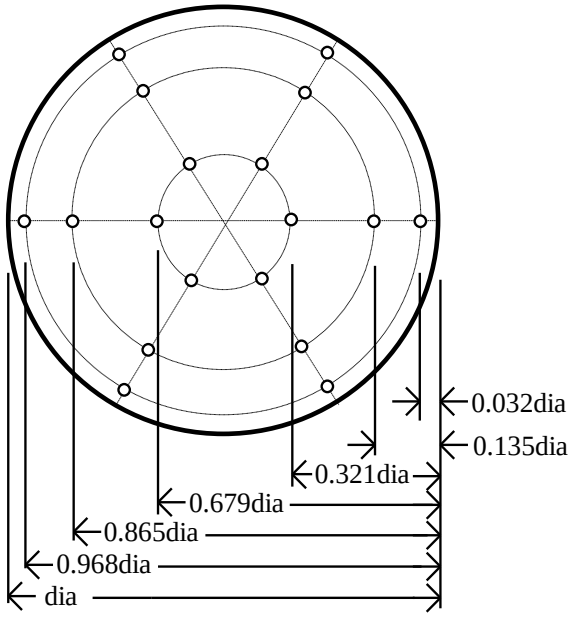

Figure 31: Location of Measuring Points when Traversing a Round Duct using Log-Tchebycheff Method

#of Measuring Points Per Diameter	Position Relative to Inner Wall
6	0.032, 0.135, 0.321, 0.679, 0.865, 0.968
8	0.021, 0.117, 0.184, 0.345, 0.655, 0.816, 0.883, 0.979
10	0.019, 0.077, 0.153, 0.217, 0.361, 0.639, 0.783, 0.847, 0.923, 0.981

Before taking the measurement, multiply the numbers in the table times the duct diameter to get insertion depth for the probe. (Do not forget to use the inside dimension of the duct if it is lined with insulation.)

Traversing a Square Duct

Using the log-Tchebycheff method, the duct is divided into rectangular areas, which are further adjusted in size to account for effects of the duct wall on the airflow. A minimum of 25 points must be measured in order to get a good average. The number of data points to be taken along each side of the duct depends on how wide that side of the duct is. For duct sides less than 30 inches, 5 traversal points must be taken along that side. For duct sides of 30 to 36 inches, 6 points must be taken. For duct sides greater than 36 inches, 7 points must be taken. Multiply the numbers in the table times the duct dimension to get insertion depth for the probe.

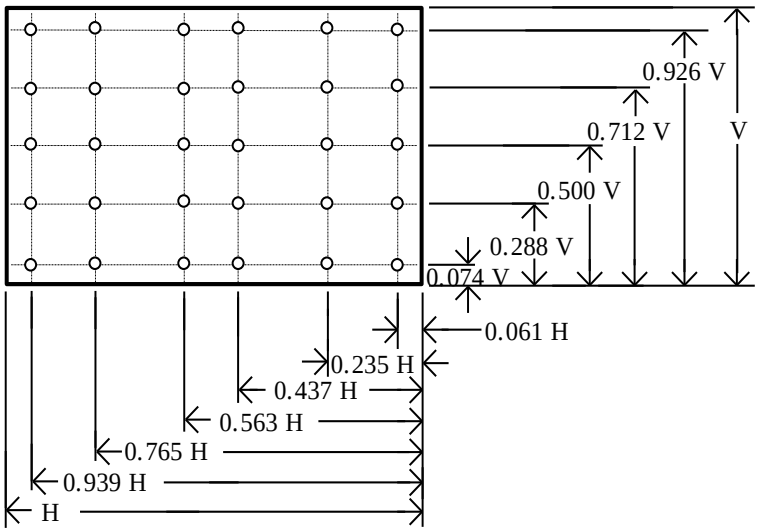

Figure 32: Location of Measuring Points for Traversing a Rectangular Duct using Log-Tchebycheff Method

For this duct, a 30-36” horizontal dimension requires 6 points (or 6 traverse lines). For this duct, a vertical dimension less than 30” requires 5 points (or 5 traverse lines).

# of Points or Traverse Lines per Side	Position Relative to Inner Wall
5	0.074, 0.288, 0.500, 0.712, 0.926
6	0.061, 0.235, 0.437, 0.563, 0.765, 0.939
7	0.053, 0.203, 0.366, 0.500, 0.634, 0.797, 0.947

(This page intentionally left blank)

Appendix C. Swirl X Flow Conditioner for Alnor Model EBT731 Balometer® Capture Hood Optional Accessory (P/N 801213)

Description

The Swirl X Flow Conditioner significantly reduces the negative effects turbulent airflows have on the measurement accuracy of pressure-based capture hoods. The Swirl X Flow Conditioner creates a more uniform flow pattern within the hood and is ideally suited for Swirl or Twist-type supply air diffusers.

Swirl or Twist diffusers, their associated ductwork and HVAC components are designed to deliver a volume of air to the targeted space with movement that entrains or mixes with the room air and increases optimal temperature uniformity and minimal sensible draft within the so-called “occupied zone”.

Air flowing through Swirl or Twist type diffusers has traditionally caused significant measurement errors in capture hoods. This is a remnant of the air flow pattern, which swirls around the hood and emerges in a highly uneven distribution across the sensing manifold of a capture hood. Measurement errors up to and exceeding 40% of flow can result, *unless a flow conditioner is used inside the capture hood*.

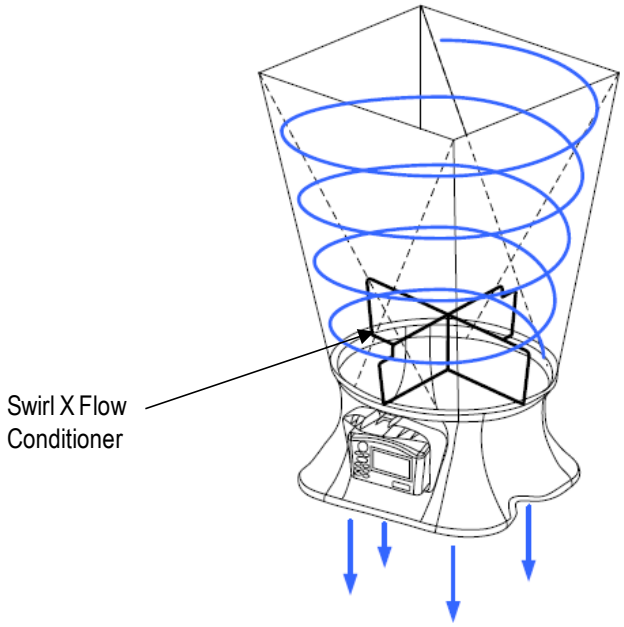

Performance Data

Performance data obtained in HVAC test laboratory using two high-accuracy flow stations as flow measurement standards. The flow stations were mounted in sealed ductwork upstream of the tested Swirl Diffusers.

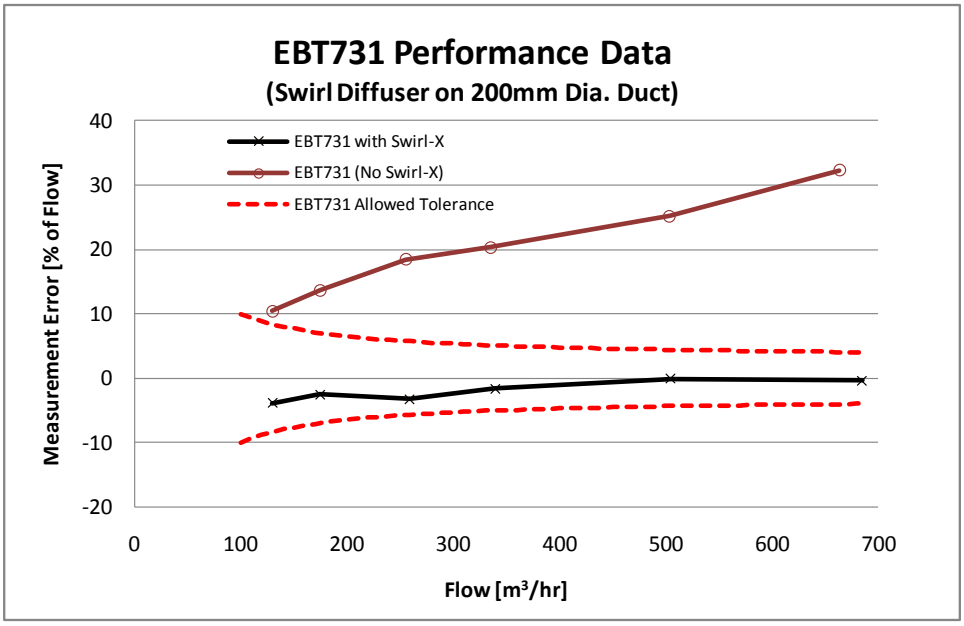

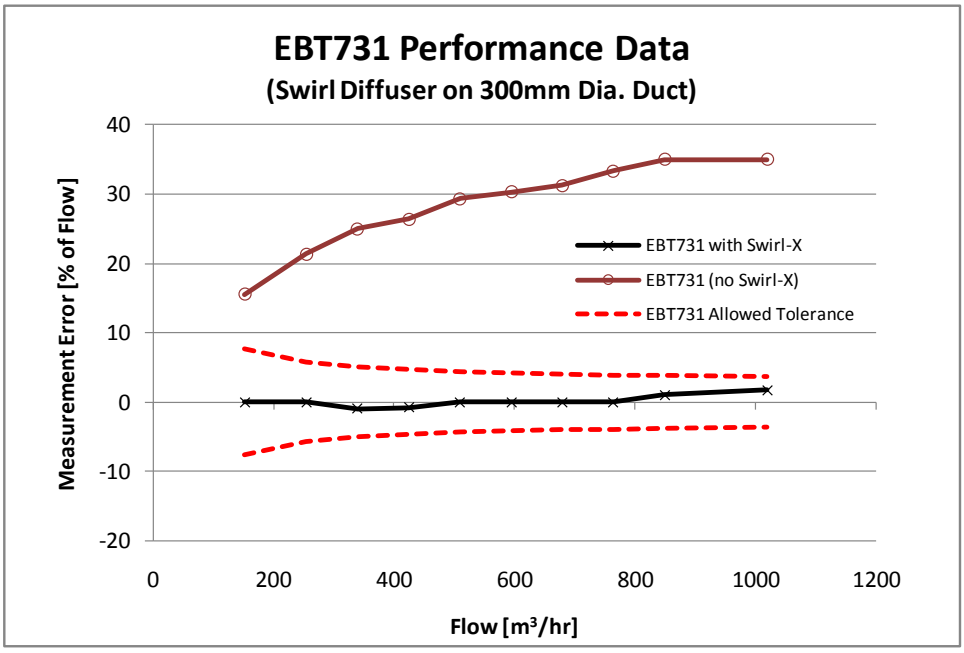

Installation and Usage

1. Put the two pieces together and place it in the base as shown below (it will sit on top of the flange of the base).
2. Install the support rods and 2’ x 2’ (610 mm x 610 mm) frame/fabric.
3. When set up, use hood as normal. There is no need to change K-factors or access any special menus for use.

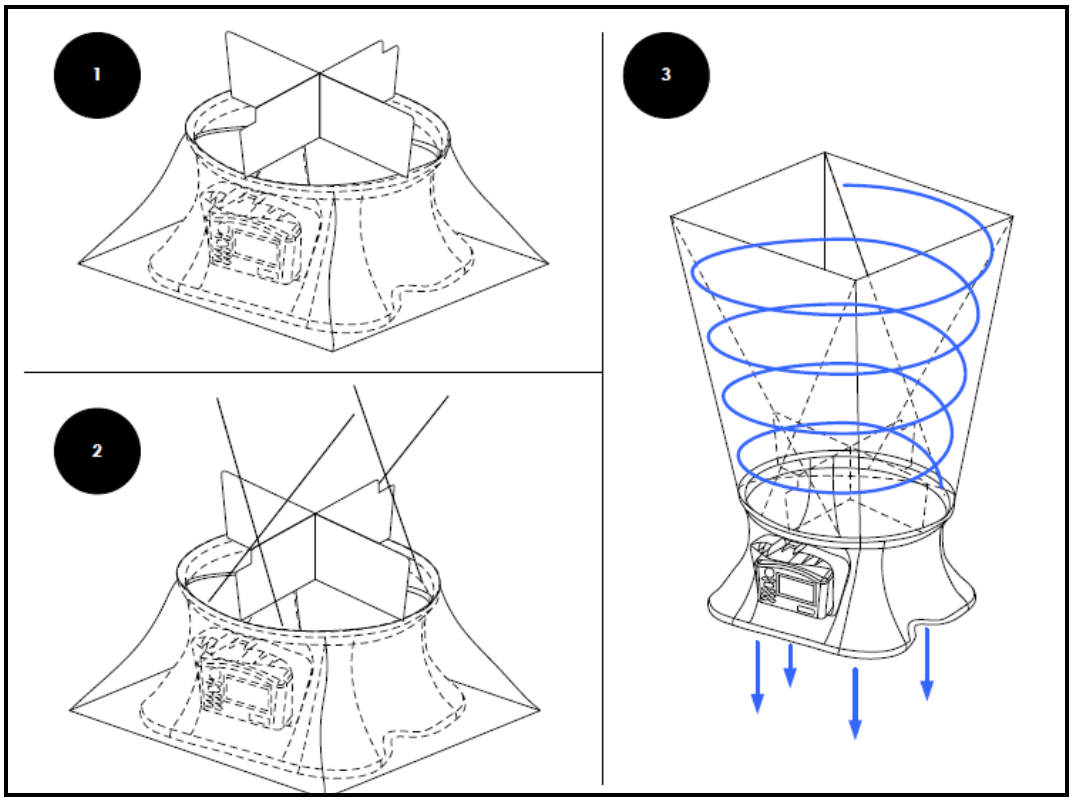

(This page intentionally left blank)

Alnor® Models EBT730/EBT731

Specifications*

Range

Differential pressure ..	±15 in. H_2O (3735 pa); 150 in. H_2O maximum safe operating pressure
Absolute pressure.....	15 to 40 in. Hg (356 to 1016 mm Hg)
Velocity.....	25 to 15,500 ft/min (0.125 to 78m/s) pitot probes; 25 to 5,000 ft/min (0.125 to 25 m/s) air flow probe; 25 to 2,500 ft/min (0.125 to 12.5 m/s) velocity matrix
Volume	25 to 2,500 ft^3/min (42 to 4250 m^3/h) capture hood supply and return
Temperature	40 to 140°F (-10 to 60°C) base temperature probe; 14 to 140°F (-10 to 60°C) temperature/RH probe; 40 to 140°F (4.4 to 60°C) operating (electronics)
Storage temperature..	-4 to 160°F (-20 to 71°C)
Rh.....	5 to 95% RH temperature/RH probe

Resolution

Pressure	0.00001 in. H_2O (0.001 pa) static and differential; 0.01 in. Hg (1 mm Hg) absolute
Velocity.....	1 ft/min (.01 m/s)
Volume	1 ft^3/min (1 m^3/h)
Rh.....	0.1% RH
Temperature	0.1°F (0.1°C)

Accuracy

Pressure	±2% of reading ±0.0001 in. H_2O (0.025 pa) static and differential; ±2% of reading absolute
Velocity.....	±3% of reading ±7 ft/min (0.04 m/s) >50 ft/min (>0.25 m/s)
Volume	±3% of reading ±7 ft^3/min (12 m^3/h) >50 ft^3/min (>85 m^3/h)
Rh.....	±3% RH
Temperature	±0.5°F (0.3°C)

Units

Pressure	in. H_2O, pa, hPa, kPa, mm Hg, in. Hg, cm Hg, mm H_2O, cm H_2O
Velocity.....	ft/min, m/s
Volume	ft^3/min, m^3/h, m^3/min, l/s
Temperature	degrees F, degrees C
Statistics	min, max, average
Data Storage	26,500 samples, time and date stamped
Logging Interval	user selectable
Response Time.....	2 to 8 seconds, differential pressure sensor

Dimensions

(manometer only)	7.4 in. × 4.5 in. × 2.3 in. (18.8 cm × 11.4 cm × 5.8 cm)
Pressure connection...	¼ in. OD straight ports with barbed ends for use with 3/16 in. (4.76 mm) ID flexible tubing
Weight with batteries..	EBT730 17 oz (0.5 kg); EBT731 7.4 lb (3.4 kg)
Power requirements....	four AA-size cells, rechargeable NiMH (included) or alkaline, or AC adapter (included), 9 VDC, 2.2 A, regulated
Battery life.....	minimum of 12 hours typical
Recharge time	4 hours (internal charger)
Language selection.....	English Spanish French Italian German Dutch Swedish Finnish Polish Portuguese Traditional Chinese Simplified Chinese Japanese Korean

Specifications are subject to change without notice.

Alnor Products, TSI Incorporated
Visit our website www.alnor.com for more information.

USA **Tel:** +1 800 874 2811 **China** **Tel:** +86 10 8219 7688
India **Tel:** +91 80 67877200 **Singapore** **Tel:** +65 6595 6388

P/N 6005725 Rev F ©2016 TSI Incorporated Printed in U.S.A.