ENERGY AND COMFORT

Ventilation Testing/Balancing

Model 8710 DP-CALC™ Micromanometer and Model 8375 ACCUBALANCE® Modular Air Balancing Tool

Operation and Service Manual

1980525, Revision E
June 2009

Model 8375 ACCUBALANCE®
Modular Air Balancing Tool

Model 8710 DP-CALC™
Micromanometer

TRUST. SCIENCE. INNOVATION.

LIMITATION OF WARRANTY AND LIABILITY

Copyright©
TSI Incorporated / 2005–2009 / All rights reserved.

Address
TSI Incorporated / 500 Cardigan Road / Shoreview, MN 55126 / USA

Fax No.
(651) 490-3824

LIMITATION OF WARRANTY AND LIABILITY (effective July 2000)
Seller warrants the goods sold hereunder, under normal use and service as described in the operator's manual, shall be free from defects in workmanship and material for twenty-four (24) months, or the length of time specified in the operator's manual, from the date of shipment to the customer. This warranty period is inclusive of any statutory warranty. This limited warranty is subject to the following exclusions:

a. Hot-wire or hot-film sensors used with research anemometers, and certain other components when indicated in specifications, are warranted for 90 days from the date of shipment.

b. Parts repaired or replaced as a result of repair services are warranted to be free from defects in workmanship and material, under normal use, for 90 days from the date of shipment.

c. Seller does not provide any warranty on finished goods manufactured by others or on any fuses, batteries or other consumable materials. Only the original manufacturer's warranty applies.

d. Unless specifically authorized in a separate writing by Seller, Seller makes no warranty with respect to, and shall have no liability in connection with, goods which are incorporated into other products or equipment, or which are modified by any person other than Seller.

The foregoing is IN LIEU OF all other warranties and is subject to the LIMITATIONS stated herein. **NO OTHER EXPRESS OR IMPLIED WARRANTY OF FITNESS FOR PARTICULAR PURPOSE OR MERCHANTABILITY IS MADE**.

TO THE EXTENT PERMITTED BY LAW, THE EXCLUSIVE REMEDY OF THE USER OR BUYER, AND THE LIMIT OF SELLER'S LIABILITY FOR ANY AND ALL LOSSES, INJURIES, OR DAMAGES CONCERNING THE GOODS (INCLUDING CLAIMS BASED ON CONTRACT, NEGLIGENCE, TORT, STRICT LIABILITY OR OTHERWISE) SHALL BE THE RETURN OF GOODS TO SELLER AND THE REFUND OF THE PURCHASE PRICE, OR, AT THE OPTION OF SELLER, THE REPAIR OR REPLACEMENT OF THE GOODS. IN NO EVENT SHALL SELLER BE LIABLE FOR ANY SPECIAL, CONSEQUENTIAL OR INCIDENTAL DAMAGES. SELLER SHALL NOT BE RESPONSIBLE FOR INSTALLATION, DISMANTLING OR REINSTALLATION COSTS OR CHARGES. No Action, regardless of form, may be brought against Seller more than 12 months after a cause of action has accrued. The goods returned under warranty to Seller's factory shall be at Buyer's risk of loss, and will be returned, if at all, at Seller's risk of loss.

Buyer and all users are deemed to have accepted this LIMITATION OF WARRANTY AND LIABILITY, which contains the complete and exclusive limited warranty of Seller. This LIMITATION OF WARRANTY AND LIABILITY may not be amended, modified or its terms waived, except by writing signed by an Officer of Seller.

Service Policy
Knowing that inoperative or defective instruments are as detrimental to TSI as they are to our customers, our service policy is designed to give prompt attention to any problems. If any malfunction is discovered, please contact your nearest sales office or representative, or call Customer Service at (651) 490-2811 or (800) 874-2811.

Trademarks
TSI, TSI logo, DP-CALC™ and ACCUBALANCE® are trademarks of TSI Incorporated.

Start Seeing the *Benefits* of Registering Today!

Thank you for your TSI instrument purchase. Occasionally, TSI releases information on software updates, product enhancements and new products. By registering your instrument, TSI will be able to send this important information to you.

http://register.tsi.com

As part of the registration process, you will be asked for your comments on TSI products and services. The ReliaStat program gives customers like you a way to tell us how we are doing.

TSI Incorporated

USA	www.tsi.com	**UK**	www.tsiinc.co.uk
Germany	www.tsiinc.de	**France**	www.tsiinc.fr

Manufacturer of TSI®, AIRFLOW™ Instruments, and Alnor® products.

P/N 2980174 Rev E

Copyright © 2008 by TSI Incorporated

CONTENTS

About This Manual ..... **iii**
Caution iii
Formatting and Typography iii
Technical Assistance—Help! iii

Chapter 1. Introduction **1**
Instrument Description 1
Micromanometer 2
Micromanometer 3
Standard Tools 3
Pitot Tube 3
Static Pressure Probe 3
Optional Tools 3
Capture Hoods 3
Velocity Matrix 3
Air Flow Probe 3
Temperature Probe 3
Temperature/Humidity Probe 3

Chapter 2. Unpacking and Setting Up **5**
Unpacking 5
Preparing the Instrument for Use 6
Power the Micromanometer with the AC Adapter 6
Power the Micromanometer with Batteries 6
Connecting the Pitot Tube to the Micromanometer 8
Connecting the Static Pressure Port to the Micromanometer 8
Attaching the Micromanometer to the Capture Hood Base 9
Connecting the Velocity Matrix to the Micromanometer 9
Connecting the Air Flow Probe to the Micromanometer 10
Connecting the Temperature Probe or Temperature and Humidity Probe to the Micromanometer 10

Chapter 3. Getting Started **13**
Keypad Operation 13
Common Terms 14
Sample 14
Logging Interval 14
Test ID 14
Step-By-Step Example Operation 15

Chapter 4. How To **17**
Select a Tool 17
Set the Time and Date 19
Change the Currently Selected Test ID 19
Recall Sample Data 19
Delete Sample Data 20
Delete all Sample Data 20
Delete the Samples Stored in a Single Test ID 20
Delete a Single Sample 20

Select/Set a K-factor for a Tool 21
View/Set Standard Pressure and Temperature 21
Set Units of Measure for Temperature, Pressure, Velocity/Flow and Humidity 23
Select the RS232 Output Device (Computer or Printer) 23
Set the Baud Rate 24
Set the Format for Date and Decimal 24
Set Display Mode for Running Average or Single 25
Select Discrete or Continuous Logging 25
Turn Back Pressure Compensation On and Off 25
Take Back Pressure Compensated Hood Readings 26
Set Deadband On and Off 26
Calibrate the Micromanometer (User Calibration) 27
Select User Calibration or Factory Calibration 27
Connect and Download Data to an Optional Printer 28
Connect and Download Data to a Computer 29
Data Acquisition (Polling) 29

Chapter 5. Changing Flow Hoods 31
Flow Hood Parts Identification 31
Hood Assembly 31
Alternate Hood Installation 32
Direct Inflow Measurement Hood for Biological Safety Cabinets 37

Chapter 6. Flow Measurements Using the Capture Hood 43
Non-Backpressure Compensated Measurements 43
Single Measurements 43
Running Average Measurements 44
Backpressure Compensated Measurements 44
Error Display 45

Chapter 7. Maintenance and Troubleshooting 47
Fabric Hood 47
Micromanometer 47
Velocity Matrix Manifold 47
Cases 48
Calibration 48
Error Code 49

Appendix A. Back Pressure 53
Verifying Flow Measurements 53

Appendix B. Actual vs. Standard Air Velocity and Flow Measurements 55

About This Manual

This manual explains how to set up, operate, and maintain the TSI® Model 8710 DP-CALC™ Micromanometer and Model 8375 ACCUBALANCE® Module Air Balancing Tool. Read it thoroughly before using the instrument.

Caution

	CAUTION
	WHILE USING THE ACCUBALANCE® AIR BALANCING INSTRUMENT TO TEST AIR FLOW IN DUCTS, YOU MAY COME INTO CONTACT WITH OR BE EXPOSED TO DUST, POLLEN, MOLD, FUNGUS, OR OTHER AIRBORNE CONTAMINANTS. IF YOU ARE OR MAY BE SENSITIVE TO DUST, POLLEN, MOLD, FUNGUS, OR OTHER AIRBORNE CONTAMINANTS, **ALWAYS** USE AN APPROPRIATE MASK OR RESPIRATOR WHILE EMPLOYING THE ACCUBALANCE® AIR BALANCING INSTRUMENT.

Formatting and Typography

- Step-by-step instructions are numbered in boldface type: **1**, **2**, **3**, etc., set flush-left against the margin.
- References to keys on the micromanometer and the instrument's displayed readout are represented by a typeface called Arial. In addition to the different typeface, displayed messages appear in quotes.
- When reference is made to other sections of the manual, the section title is italicized.

Technical Assistance—Help!

For technical assistance or questions about the instrument of this manual, or if the Model 8710 Micromanometer or Model 8375 ACCUBALANCE® Modular Air Balancing Tool needs repair or recalibration, call Technical Support at (651) 490-2811 or (800) 874-2811. Product application notes are available to provide more information on the product. These application notes, as well as other related material, can be obtained by visiting the TSI web site at http://www.tsi.com or by calling Customer Service.

Chapter 1. Introduction

The Model 8710 DP-CALC™ Micromanometer is a lightweight and easy-to-use instrument packaged with a variety of accessories for measuring pressure, temperature, humidity, air velocity, and air volume. Features of the micromanometer include:

- Single-function keys for ease of use
- Auto-zero for pressure measurements and auto-density correction
- User-selectable English and metric units
- Conversions between actual and standard flow
- Discrete or continuous display and data logging capabilities
- Output port for downloading to a printer or a PC
- Powered by AC adapter or batteries (rechargeable NiMH or alkaline)
- Full field calibration

The Micromanometer is designed for:

- Test and balance professionals
- Mechanical contractors
- Industrial hygienists
- Plant engineers and facilities maintenance personnel

Applications include:

- Test, balance, or commission HVAC systems
- Test clean rooms and biological safety cabinets
- Measure fume hood or filter face velocity
- Measure pressure, temperature, relative humidity, air velocity, or air flow

Instrument Description

The basic Model 8710 includes a micromanometer, carrying case, 18 in. (46 cm) pitot tube, (2) static pressure probes, (2) 8 ft (2.4 m) Norprene® tubing, user manual, LogDat™ for Windows® data downloading software and RS232 interface cable, neck strap, internal NiMH battery charger, (4) AA NiMH batteries, AC adapter, and NIST traceable certificate.

The Model 8375 ACCUBALANCE® balancing tool adds a 2 ft × 2 ft (610 mm × 610 mm) capture hood kit, base, and wheeled carrying case. A variety of optional tools *(see below)* are also available to meet your measurement needs.

The following paragraphs provide brief descriptions of the micromanometer and the various standard and optional tools for use with the micromanometer. Refer to Chapters 3 and 4 for more detailed information on using the micromanometer and taking measurements with various sensors and probes.

®Norprene is a registered trademark of Norton Performance Plastics, Akron, Ohio, USA.

	CAUTION
	WHILE USING THE ACCUBALANCE® AIR BALANCING INSTRUMENT TO TEST AIR FLOW IN DUCTS, YOU MAY COME INTO CONTACT WITH OR BE EXPOSED TO DUST, POLLEN, MOLD, FUNGUS, OR OTHER AIRBORNE CONTAMINANTS. IF YOU ARE OR MAY BE SENSITIVE TO DUST, POLLEN, MOLD, FUNGUS, OR OTHER AIRBORNE CONTAMINANTS, **ALWAYS** USE AN APPROPRIATE MASK OR RESPIRATOR WHILE EMPLOYING THE ACCUBALANCE® AIR BALANCING INSTRUMENT.

Micromanometer

Figures 1 and 2 show the features of the micromanometer.

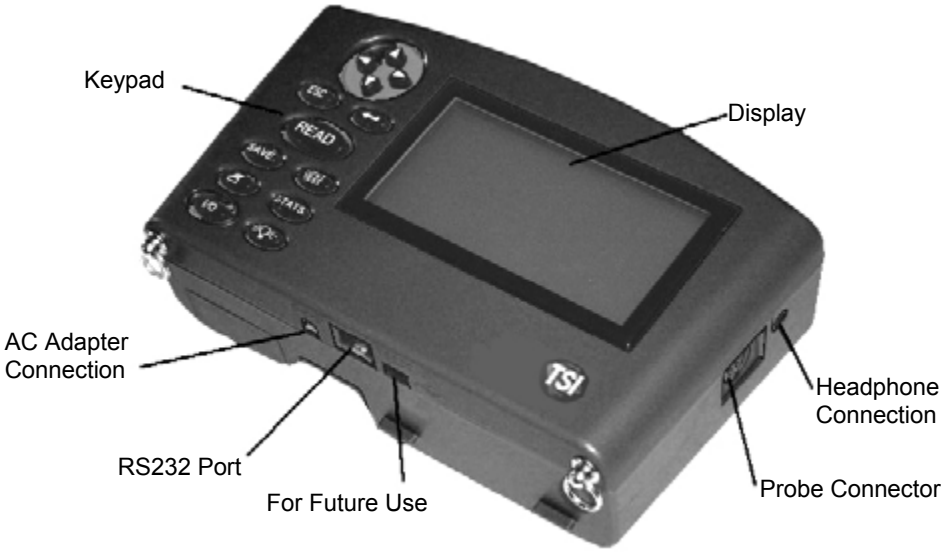

Figure 1: Features of the Model 8710 DP-CALC™ Micromanometer, Front View

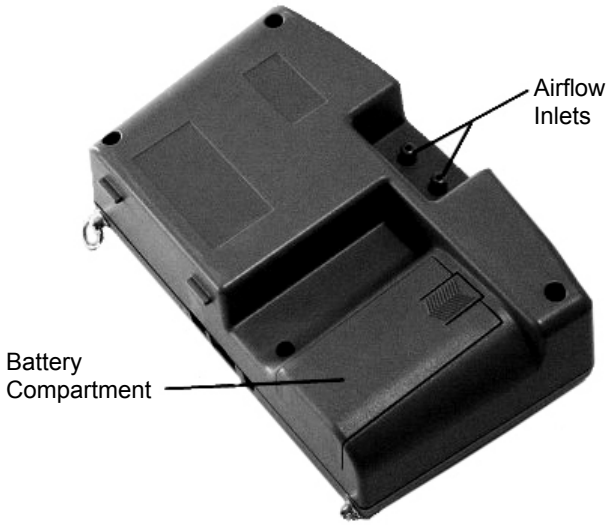

Figure 2: Features of the Model 8710 DP-CALC™ Micromanometer, Back View

Micromanometer

The micromanometer is a multifunction instrument useful in obtaining air velocity, air flow, absolute and differential pressure, temperature, and humidity measurements when used with the tools listed below. The lightweight micromanometer incorporates auto-zeroing for high-accuracy, low-end pressure measurements.

Standard Tools

This section gives a brief description of standard tools for the micromanometer.

Pitot Tube

The pitot tube is primarily used to obtain air velocity, air volume, and velocity pressure measurements within ductwork.

Static Pressure Probe

The static pressure probe is primarily used to obtain static pressure measurements within ductwork.

Optional Tools

This section gives a brief description of optional tools for the micromanometer.

Capture Hoods

Capture hoods are primarily used to obtain volumetric air flow measurements through diffusers, registers and grilles. Capture hoods are available in a kit with one 2 ft × 2 ft (610 mm × 610 mm) fabric hood, frame, and base assembly. Alternate hood sizes are available and descriptions and part numbers can be found in Table 2 of Chapter 2 in this manual.

Velocity Matrix

The velocity matrix is primarily used to obtain area-averaged multi-point air velocity measurements useful in laboratory hood face velocity testing, filter face velocity testing, and other applications.

Air Flow Probe

The air flow probe is primarily used to obtain single point air velocity or air volume measurements in ductwork.

Temperature Probe

The temperature probe is used to obtain temperature measurements over the range of -40 to 250°F (-40 to 121°C).

Temperature/Humidity Probe

The temperature/humidity probe is used to obtain temperature measurements over the range of 14 to 140°F (-10 to 60°C), humidity measurements over the range of 0 to 95% RH, along with calculated wet bulb temperature of 40 to 140°F (4 to 60°C) and dewpoint temperature of 5 to 120°F (-15 to 49°C).

Chapter 2. Unpacking and Setting Up

This chapter describes unpacking and setting up (preparing) the micromanometer for use. Figure 3 shows a picture of the Model 8710 with a velocity matrix measuring the face velocity on a laboratory hood.

Figure 3: Model 8710 with Velocity Matrix

Unpacking

As you unpack the instrument and accessories, check the components against your packing list. If any parts are missing or damaged, notify us immediately. Tables 1 and 2 list available standard and optional components.

Table 1: List of Standard and Optional Components

Item	Part No./Model No.
TSI Model 8710 DP-CALC Micromanometer	8710-XXX
TSI Model 8375 ACCUBALANCE® Modular Air Balancing Tool with North American AC Adapter TSI Model 8375 ACCUBALANCE® Modular Air Balancing Tool with multi-Country AC Adapter	8375 8375M
Carrying case	1319378
Carrying case, wheeled hood kit, Model 8375	1319379
AA-size NiMH battery, four required	1208048
Operation and Service Manual	1980495
Velocity Matrix Add On Kit	801090
Air Flow Probe	800187
Printer, Serial (U.S.A. and Canada)	Contact TSI
12 in. (30 cm) Pitot Probe	634634000
18 in. (46 cm) Pitot Probe	634634001
24 in. (61 cm) Pitot Probe	634634002
36 in. (91 cm) Pitot Probe	634634003
60 in. (152 cm) Pitot Probe	634634005
Temperature Probe	800218
Temperature and Humidity Probe	800219
Battery Charger, includes 4 NiMH batteries	801093

Item	Part No./Model No.
Capture Hood upgrade kit for 8710 DP-CALC™ micromanometer includes: 2 ft × 2 ft hood fabric, frame, poles, base, wheeled carrying case	801179
AC Adapter (USA)	8710-USA
AC Adapter (EU)	8710-EUA
AC Adapter (UK)	8710-UKA
AC Adapter (AU)	8710-AUA

Table 2: List of Optional Hood Components

Item	Part No.
1 ft × 4 ft (305 mm × 1220 mm) fabric hood and frame kit	801200
1 ft × 4 ft (305 mm × 1220 mm) and 2 ft × 4 ft (610 mm × 1220 mm) fabric hood and frame kit	801206
2 ft × 4 ft (610 mm × 1220 mm) fabric hood and frame kit	801201
1 ft × 5 ft (305 mm × 1525 mm) fabric hood and frame kit	801202
1 ft × 5 ft (305 mm × 1525 mm) and 3 ft × 3 ft (915 mm × 915 mm) fabric hood and frame kit	801207
3 ft × 3 ft (915 mm × 915 mm) fabric hood and frame kit	801203
8 in. × 21 in. (203 mm × 533 mm) BSC fabric hood, frame, poles, and stand kit	801204
10 in. × 21 in. (254 mm × 533 mm) BSC fabric hood, frame, poles, and stand kit	801205

Please complete the registration card included with this product and mail it promptly. The card allows us to inform you of product updates. If you prefer, register through the TSI web site.

Preparing the Instrument for Use

Before you can use the micromanometer, you must decide on a power source.

Power the Micromanometer with the AC Adapter

When the AC adapter is plugged into the micromanometer, the unit automatically turns on, runs a brief diagnostic check, and briefly lights all segments of the display. It then displays the type of batteries the unit is set to use (alkaline or rechargeable NiMH) and turns itself OFF.

Whenever the AC adapter is plugged into the micromanometer, the rechargeable batteries are recharged. (Assuming you are using rechargeable batteries and the switch inside the battery compartment is set to NiMH. See below.)

Power the Micromanometer with Batteries

When not using the AC adapter, the micromanometer requires four AA-size batteries to operate. These can be either alkaline batteries or rechargeable NiMH batteries. For your convenience, four NiMH batteries are included with the micromanometer.

To select the type of batteries you are using:

1. Turn the unit off and locate the battery cover on the back of the micromanometer (see Figure 4).

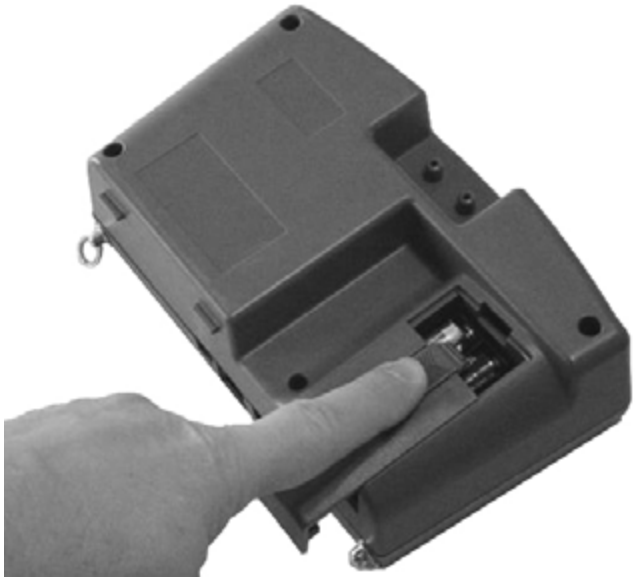

Figure 4: Battery Cover Removal

2. Press down on the compartment cover and slide it down. (The cover slides off.)
3. Remove the battery holder by pulling up on the bottom (to loosen it) and then pulling the battery holder free.
4. Refer to Figure 5 and set the battery selection switch to indicate the type of batteries you are using.

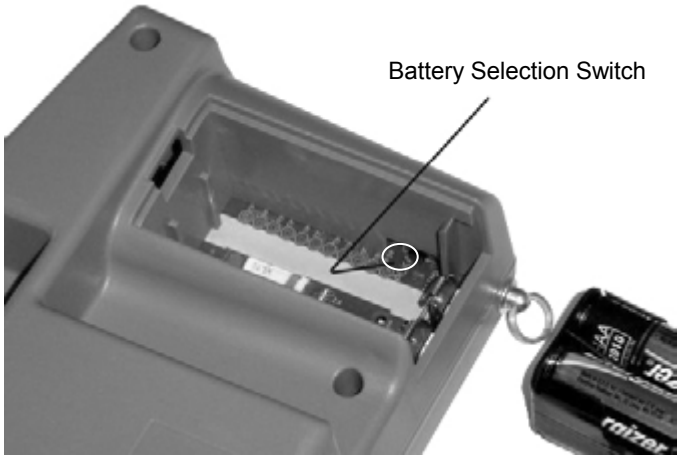

Figure 5: Location of Battery Type Selector Switch

5. Reinstall the battery holder and replace the battery compartment cover.

To install replacement batteries:

1. Turn the unit off and locate the battery cover on the back of the micromanometer (see Figure 4).
2. Press down on the compartment cover and slide it down. (The cover slides off.)
3. Remove the battery holder by pulling up on the bottom (to loosen it) and then remove the battery holder.

4. Remove the old batteries and replace with fresh batteries (alkaline or rechargeable NiMH). Make certain batteries are correctly oriented.
5. Verify the battery selection switch is correctly set (see Figure 5).
6. Reinstall the battery holder and replace the compartment cover.

Note: *Make sure the battery holder is oriented so that its terminals make contact with the spring contacts in the battery compartment.*

If fresh, new alkaline batteries are used, the battery indicator will show 4 bars when first turned on. With NiMH batteries, the indicator *may* show a lower value even when they are fully charged.

Notes*:* *The percent power remaining will not be accurate for NiMH batteries because their voltage does not decrease linearly with power use.*

Due to the danger of battery leakage, remove batteries from the battery compartment before storage. Never mix battery types.

The NiMH batteries should only be charged at room temperature. Starting with batteries that are too cold or too warm can cause the charge cycle to stop early.

Connecting the Pitot Tube to the Micromanometer

The static pressure port (-) on the pitot tube will be connected to the negative pressure (-) port on the micromanometer, and the total pressure port (+) on the pitot tube will be connected to the positive (+) port on the micromanometer (see Figure 6).

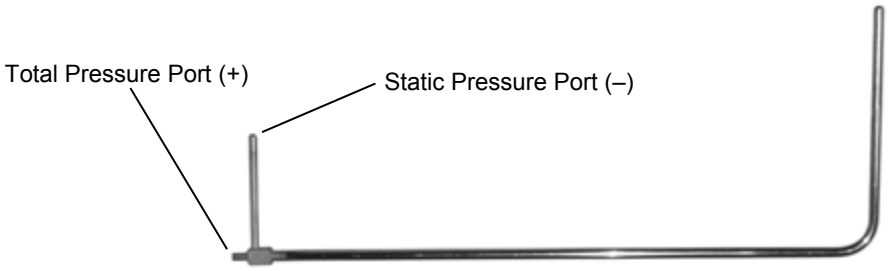

Figure 6: Pitot Tube

Connecting the Static Pressure Port to the Micromanometer

The static pressure port on the static pressure probe will be connected to the (+) port on the micromanometer. The (-) port on the micromanometer will be open to atmosphere (see Figure 7).

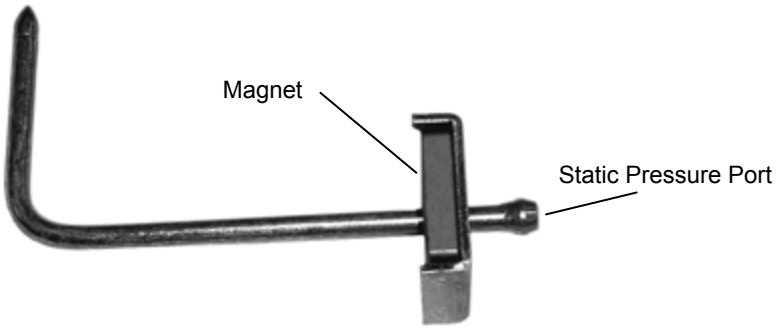

Figure 7: Static Pressure Probe

Attaching the Micromanometer to the Capture Hood Base

1. Tilt the meter forward and align the tabs in the base of the meter with the two matching slots in the bottom of the recessed area at the front of the base (see Figure 8).
2. When the tabs are engaged in the slots, press firmly on the face of the meter above the display until the tab in the top center of the meter "clicks" into the bent metal retaining clip in the base.
3. Attach the temperature cable and the back pressure flap switch cable to the right side of the meter.
4. To remove the meter from the base, first disconnect the temperature cable and the back pressure flap switch cable, then press upward on the metal retaining clip to release the meter from the base.

Figure 8: Attaching the Meter to the Capture Hood Base

Connecting the Velocity Matrix to the Micromanometer

The positive port (+) is located on the side of the Velocity Matrix that is opposite the handle assembly. The positive port (+) on the Velocity Matrix will be connected to the (+) port on the micromanometer, and the negative port (-) on the Velocity Matrix is connected to the (-) port on the micromanometer.

Standoffs can be screwed together to make different lengths and are used to maintain a fixed and level orientation away from a filter. The standoffs are attached to the positive (+) side of the velocity matrix.

The handle assembly is attached to the downstream or negative (-) side in the center of the velocity matrix (see Figure 9).

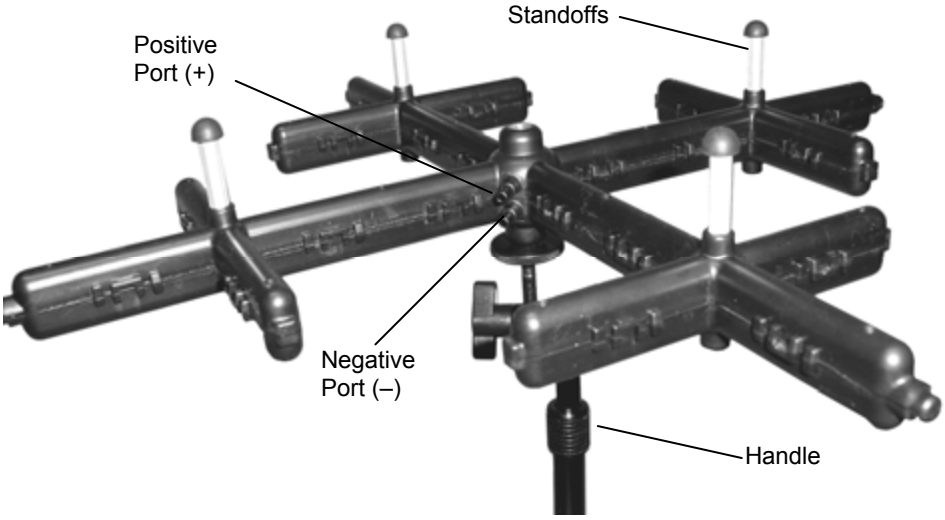

Figure 9: Velocity Matrix

Connecting the Air Flow Probe to the Micromanometer

The static pressure port (-) on the Air Flow Probe will be connected to the negative pressure (-) port on the micromanometer, and the total pressure port (+) on the Air Flow Probe will be connected to the positive (+) port on the micromanometer (see Figure 10).

Note: *Observe the arrow indicator on the Air Flow Probe when taking air velocity or air volume measurements.*

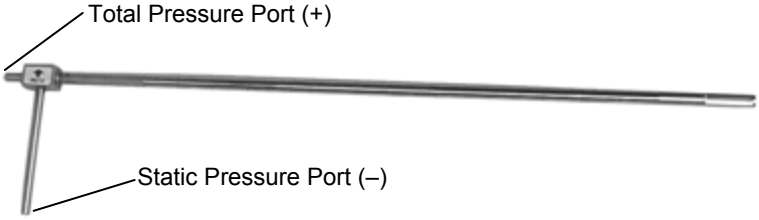

Figure 10: Air Flow Probe

Connecting the Temperature Probe or Temperature and Humidity Probe to the Micromanometer

The Temperature probe and Temperature/Humidity probe attach to the 8-pin connector located on the right hand side of the micromanometer. When connecting the probe to the meter, the dimple on the connector must be aligned to fit the receptacle indentation on the meter (see Figure 11).

Figure 11: Connector for the Temperature Probe or Temperature/Humidity Probe

Chapter 3. Getting Started

This section provides information to help you quickly become familiar with the Model 8710 Micromanometer functions. It also includes step-by-step instructions for taking Sample readings.

Keypad Operation

The keypad lets you enter information, initiate functions, and change values stored in the micromanometer. It will be helpful before operating the micromanometer to understand more fully what each of the keys do.

◀ ▶ ▼ and▲

The arrow keys let you navigate through menus or select options. Generally only one set of arrow keys (▲,▼ or ◀,▶ are operational for any given operation. Use ◀ and ▶ to move through menus; use ▲ and ▼ to increase or decrease a value.

ESC

The ESCAPE key is used to cancel or end an operation or back up to the last screen of displayed information. The ESC key is useful if you press ↵ and realize you meant to use one of the other keys.

↵

The ENTER key is used to accept the present value or move to the next level of a menu.

READ

If the display mode is set to SINGLE, pressing the READ key begins a reading, which stops automatically when the reading is done.

If the display mode is set to RUNAVG, the micromanometer will measure continuously, and pressing READ will alternately pause or resume the measurement. (See Chapter 4 on how to set the display mode to SINGLE or RUNAVG.)

Note: *Pressing the READ key will not store any measurement to memory.*

SAVE

The SAVE key is used to save the currently displayed measurement to the data logging memory.

NEXT TEST

The NEXT TEST key is used to select a new unused Test Id for saving Samples when logging data.

The PRINT key downloads data to an optional printer or to a computer. Refer to Chapter 4 for information on downloading data.

STATS

The STATISTICS key lets you display COUNT, MINimum, MAXimum and AVeraGe for the Test ID currently selected for logging data.

I/O

The ON/OFF key is used to turn the micromanometer on or off.

The BACKLIGHT key turns the display's backlighting on and off. Use backlighting only when working in areas where you cannot read the display with existing light. Backlighting has a significant impact on battery life.

Common Terms

In this manual there are several terms that are used in different places. The following is a brief explanation of the meanings of terms.

Sample

A Sample consists of all of the measurement parameters stored each time the SAVE key is pressed, or after each logging interval has passed. The maximum number of Samples is 1000.

Logging Interval

The Logging Interval is the frequency period that the micromanometer will log readings, when logging is set to CONTIN (continuous). For example, if logging is set to CONTIN and the logging interval is set to 60 seconds, a Sample can be taken and saved automatically every 60 seconds. Refer to Chapter 4 for more information on continuous data logging.

Test ID

A Test ID consists of a group of Samples. A Test ID can contain up to 1000 Samples. The maximum number of Test IDs is 255.

Any new Sample will be saved to the current Test ID. You can change the current Test ID at any time to keep your data organized, refer to instructions in Chapter 4.

The unit does not allow you to store Samples of different character in the same Test ID. If the READ key is pressed after changes have been made to the Tool or display units or some other parameter, TEST ID flashes on the display and a new unused TEST ID is selected.

In addition to the data for each Sample, the statistics that are available to view by TEST ID are:

SUM - The sum of all stored values in that TEST ID. (SUM is only available for Diffuser Flow [flow from pressure and K-Factor])

MINIMUM - The lowest value stored in that TEST ID

MAXIMUM - The highest value stored in that TEST ID

AVERAGE - The SUM divided by the number of Samples

COUNT - The number of Samples in that TEST ID

Once you have collected data in a Test ID, you can send it to a printer or a computer. See instructions for downloading data in Chapter 4.

Step-By-Step Example Operation

The quickest way to become acquainted with the operation of the micromanometer is to take a few Samples while in the pressure mode.

To take Samples proceed as follows:

1. Connect the AC adapter to the micromanometer or install batteries in the micromanometer (see Chapter 2).
2. Turn on the micromanometer by pressing the I/O key. The unit displays INIT (initializing) and runs a brief diagnostic test.
3. If the display mode is set to SINGLE, the unit will stop and show READY on the display. Pressing READ will begin a reading, which stops automatically when the reading is done. If the display mode is set to RUNAVG, the micromanometer will start measuring continuously, and pressing READ will pause and resume the measurement. (See Chapter 4 on how to set the display mode to SINGLE or RUNAVG.)
4. While the unit reads the measurements, it makes a "clicking" sound.
5. When data collection is finished, the display shows the pressure reading. Press the SAVE key to save the displayed reading to the currently selected Test ID. (If the SAVE key is pressed before the micromanometer has collected enough data to save, NO.DATA is displayed.)
6. Repeat steps 4-5 to save additional Samples.

Refer to Chapter 4 for detailed "How To" information on recalling the saved Samples and many other specific operations.

Chapter 4. How To

This chapter explains how to perform a variety of operations:

- Select a Tool/Probe
- Set the Date and Time
- Change the current Test ID
- Recall Sample Data
- Delete Sample Data
- Delete All Sample Data
- Select/Set a K-factor
- View/Set Standard Pressure and Temperature
- Set Units of Measure for Temperature, Pressure, Flow and Humidity
- Select the RS232C Output Device (Computer or Printer)
- Set the Baud Rate
- Set the Date and Decimal Format
- Set Display Mode for Running Average or Single
- Select Discrete or Continuous Logging
- Turn Back Pressure Compensation On and Off
- Take Back Pressure Compensated Hood Readings
- Set Deadband On and Off
- Calibrate the Micromanometer
- Select User vs. Factory Calibration
- Connect and Download to a Printer
- Connect and Download to a Computer
- Data Acquisition (Polling)

***Note**: The operations described below assume you are starting from the READY display. As you use the instrument, you will find it unnecessary to return to the READY display each time. Press the ESC key (one or more times) to return to the READY display.*

Select a Tool

The instrument accepts a number of different measurement devices, referred to as Tools. The Tools are:

- Capture hoods for measuring flow from grilles and diffusers.
- A velocity matrix for area-averaged multi-point velocity measurements.
- Pitot tubes for flow and velocity measurements.
- Air Flow probes for flow and velocity measurements.
- A Diffuser Flow tool which can calculate flow for diffusers equipped with differential pressure taps. (The Diffuser Flow tool is a flow calculation method, not a physical device.) For the Diffuser Flow tool, flow is calculated from the square root of pressure times a user entered K-factor.

Table 3 identifies each Tool and the units of measure available for that tool.

Table 3: Tool Selection Display

Display Shows	Tool	Units Available
Pressure units only	Pressure	in H_2O, mm H_2O, cm H_2O, Pa, hPa, kPa, mm Hg, cm Hg, in Hg,
with flow units	Capture Hood	l/s, m^3/hr, m^3/min, CFM
Pressure units with K-factor and flow units	Diffuser Flow	l/s, m^3/hr, m^3/min, CFM
with flow units	Air Flow Probe Flow	l/s, m^3/hr, m^3/min, CFM
with velocity units	Air Flow Probe Velocity	ft/min, m/s
with flow units	Pitot Tube Flow	l/s, m^3/hr, m^3/min, CFM
with velocity units	Pitot Tube Velocity	ft/min, m/s
	Velocity Matrix	ft/min, m/s

To select a Tool, proceed as follows:

1. Press ↵ to display CHANGE Test ID.
2. Press ▶ until TOOL appears.
3. Press ↵**.** The display shows an icon and units (see Table 3 above) to indicate the currently selected TOOL and the units selected for it.
4. Press ▲ or ▼ to scroll through the available TOOLs. See Table 3 above.
5. When the TOOL you want to use is displayed, press ↵**.**
6. If you select "flow" using either a pitot tube or an Air Flow probe, the display will flash a ◯ and ▭. This indicates that you need to enter the duct shape and duct size. Proceed with steps 7-10. If you selected another TOOL, you will return to the TOOL menu.

   ***Note**: The only way to change the duct shape or size later is to re-enter the Tool select menu and re-select the Tool.*

7. Use ▲ or ▼ to select the duct shape and stop the flashing.
8. Press ↵**.** The display shows the currently selected duct size (flashing).
9. Use ▲ or ▼ to change the size. (If you selected a rectangular size, you need to enter/change the size for both height and width, even if the duct is square. Change the x dimension first, then press ↵ and change the y dimension).
10. Press ↵ to exit to the TOOL menu.

Set the Time and Date

1. Press ↵ to display CHANGE Test ID.
2. Press ▶ until SETUP appears.
3. Press ↵.
4. Press ▶ until TIME is displayed.
5. Press ↵. The display shows the current time and date. The hours value is flashing.
6. Use ◀ and ▶ to move between values and ▲ and ▼ to adjust values.
7. Press ↵ when you have set the time and date as desired.

   Note: *You can change the date format (see "Set Format" below). Allowable formats are mm.dd and dd.mm.*

Change the Currently Selected Test ID

To change the Test ID in which Samples will be stored, proceed as follows:

1. Press ↵ to display CHANGE Test ID.
2. Press ↵ to display the current Test ID.
3. Use ▲ and ▼ to select the Test ID you want to use.

   Note: *If you press ▲ again after the highest numbered Test ID is displayed, you will add a new Test ID. (The Test ID is empty until you send Samples to it.) Also, if you press SAVE (or try to automatically log data to a Test ID) and the Tool or display units or measurement parameters are different from the information already stored in the currently selected Test ID, the instrument will automatically change the currently selected Test ID to a new unused Test ID. See the description of "TEST IDs" in Chapter 3.*

Recall Sample Data

To recall Sample data so that you can review it or send it to a printer or computer, proceed as follows:

1. Press ↵ to display CHANGE Test ID.
2. Press ▶ until RECALL appears.
3. Press ↵ to display the current Test ID.
4. Use ▲ and ▼ to select the Test ID you want to recall a Sample from.
5. Press ↵. The COUNT for the selected Test ID is displayed. (Count is the number of Samples in the Test ID.)

   Press ▲ or ▼ to display an entry in the selected Test ID. In addition to displaying individual Sample values, you can also view the MAX, MIN, AVG, and SUM of the data in the Test ID. (SUM is only available for Diffuser Flow [flow from pressure and K-Factor].) Hold down ▲ or ▼ to scroll quickly through the data.

Delete Sample Data

You can delete data in three ways: 1) delete all Sample data in all Test IDs, 2) delete all Sample data for a single Test ID, and 3) delete only the last Sample currently stored in a Test ID.

Delete all Sample Data

1. Press ↵ to display CHANGE Test ID.
2. Press ▶ until DELETE appears.
3. Press ↵. The display shows DELETE ALL.
4. Press ↵. The instrument counts down from 3 to 0 and then deletes all Sample data.

   Note: *This countdown gives you time to change your mind. If you decide not to delete all samples after pressing ↵, press ESC before the count reaches 0. Samples will* ***not*** *be deleted.*

Delete the Samples Stored in a Single Test ID

1. Press ↵ to display CHANGE Test ID.
2. Press ▶ until DELETE appears.
3. Press ↵. The display shows DELETE ALL.
4. Press ▶. The display shows DELETE Test ID.
5. Press ↵. The display shows the currently selected Test ID.
6. Use ▲ and ▼ to display the Test ID whose Samples you want to delete.
7. Press ↵. "DELETE" flashes while all Samples for the selected Test ID are deleted.
8. Repeat steps 6 and 7 to delete other Test IDs.

Delete a Single Sample

1. Press ↵ to display CHANGE Test ID.
2. Press ▶ until DELETE appears.
3. Press ↵. The display shows DELETE ALL.
4. Press ▶. The display shows DELETE Test ID.
5. Press ▶. The display shows DELETE #.
6. Press ↵. The display shows the currently selected Test ID.
7. Use ▲ and ▼ to display the Test ID containing the Sample you want to delete.
8. Press ↵. The display shows the last Sample in the Test ID.
9. Press ↵. "DELETE" flashes while the last Sample of the selected Test ID is deleted.
10. Repeat step 9 to delete other Samples in the selected Test ID.

Select/Set a K-factor for a Tool

It is possible to enter K-Factors to adjust the calculations of the velocity and flow measurements.

For Pitot Velocity, Pitot Flow, Air Flow Probe Flow, Air Flow Probe Velocity and Velocity Matrix, the K-Factor is simply multiplied by the calculated velocity or flow in order to get the displayed value. For these Tools, use of a K-Factor is optional and setting the K-Factor to 1.0 will turn it off. The K-factor range for these Tools is 0.500 to 1.500.

For the Diffuser Flow Tool (Flow from Pressure and K-factor), the use of a K-Factor is mandatory. The displayed flow for this tool is the square root of pressure times the entered K-Factor. The K-factor range for this Tool is 0.001 to 9.999.

You can only enter a K-factor if you have selected a Tool that can use a K-factor. The Pressure Tool does not use K-factors.

To select or set a K-factor, proceed as follows:

1. Press ↵ to display CHANGE Test ID.
2. Press ▶ until K-FACT appears.
3. Press ↵. The K-factor currently being used flashes on the display.
4. Press ▶ to scroll through the available K-factors or turn the K-factor Off. The instrument lets you set four K-factors for each tool that uses a K-factor.
5. If you want to change the value of a K-factor, use ▲ and ▼ to change the K-factor to the value desired.
6. Press ↵ to accept the desired K-factor. K-FACT is displayed.
7. You can repeat steps 3–6 to select and/or adjust other K-factors for the Tool. Once you set a K-factor it remains set until you change it.

View/Set Standard Pressure and Temperature

Temperature and barometric pressure are used for calculating some of the flow and velocity measurements shown by this instrument, as follows:

For the Pitot Flow, Pitot Velocity, Air Flow "Flow", Air Flow Velocity, Capture Hood, and Velocity Matrix, the instrument uses barometric pressure measured by an internal barometric pressure sensor.

For these tools, the instrument will also use temperature measured by a temperature sensor plugged into the side of the meter.

The hood base temperature sensor, accessory temperature probe, or the accessory temperature/humidity probe can be used for supplying this temperature measurement. If none of these temperature sensors are plugged in, you will need to enter the flow temperature using the STP.SET menu.

For the Diffuser Flow tool (Flow from Pressure and K-factor), temperature and barometric pressure are not used for calculating flow. Therefore the user is not required to enter a temperature for this tool.

To display the Barometric Pressure:

1. Press ↵ to display CHANGE Test ID.
2. Press ▶ until STP.SET appears.
3. Press ↵. ACT.STD is displayed.
4. Press ▶ until B.PRESS appears. The measured barometric pressure is displayed. Barometric pressure is not changeable by the user.
5. Press ESC to return to the STP.SET menu.

To view the Measured Temperature and set the Entered Temperature:

Note: *Since the entered temperature is not used for the Diffuser Flow tool (Flow from Pressure and K-factor), this ENT.MES menu screen is not available if that tool is selected.*

1. Press ↵ to display CHANGE Test ID.
2. Press ▶ until STP.SET appears.
3. Press ↵. ACT.STD is displayed.
4. Press ▶ until ENT.MES appears.
5. Press ↵. The display shows the user ENTered temperature on the left and the currently MEaSured temperature on the right (if a temperature sensor is plugged in).
6. Adjust the user entered temperature using ▲ and ▼, then press ↵ to save it and return to the STP.SET menu.

   Note: *To save time, if a temperature probe is installed, you can copy the measured temperature to the entered temperature, by pressing READ.*

   ENTered temperature is used for density correction of velocity or flow values only if no temperature probe is connected. If a temperature probe is connected during velocity or flow measurement, MEaSured temperature will be used for density correction. For most accurate density correction, be sure the connected temperature probe is exposed to the temperature of the flow or velocity being measured.

To Select Actual Flow/Velocity or Standard Flow/Velocity:
(The Actual/Standard selection is used for all tools displaying flow and velocity except the Diffuser Flow [Flow from Pressure and K-factor] tool.)

1. Press ↵ to display CHANGE Test ID.
2. Press ▶ until STP.SET appears.
3. Press ↵. ACT.STD is displayed.
4. Press ↵. The display shows the currently selected option (flashing). Options are ACTUAL and STD.
5. Use ▲ or ▼ to select the option you want to use.
6. Press ↵. ENT.MES is displayed.
7. Press ESC to return to the STP.SET menu.

Set Units of Measure for Temperature, Pressure, Velocity/Flow and Humidity

1. Press ↵ to display CHANGE Test ID.
2. Press ▶ until SETUP appears.
3. Press ↵.
4. Press ▶ until UNITS appears.
5. Press ↵. The display shows TEMP.
6. Press ↵. The display shows the current temperature units. Options are °F or °C.
7. Use ▲ and ▼ to select between options.
8. Press ↵ when you have selected the desired units.
9. Press ▶ until PRESS is displayed.
10. Press ↵. The display shows the current pressure units. Options are: in. H_2O, cm. H_2O, mm H_2O, in. Hg, cm. Hg, mm Hg, kPa, hPa, and Pa.
11. Use ▲ and ▼ to select between options.
12. Press ↵ when you have selected the desired units.
13. Press ▶ until VELFLO is displayed.
14. Press ↵. The display shows the current velocity/flow units. Options are ft/min for velocity with CFM for flow, and m/s for velocity with either l/s, m^3/h, or m^3/min for flow.
15. Use ▲ and ▼ to select between options. (If m^3/h, or m^3/min is selected for flow, m/s will be used for velocity even though "m/s" is not shown on the display.)
16. Press ↵ when you have selected the desired units.
17. Press ▶ until HUMID is displayed.
18. Press ↵. The display shows the current humidity units. Options are DEWPT, WETBULB, and %RH.
19. Use ▲ and ▼ to select between options.
20. Press ↵ when you have selected the desired units.
21. Press ESC twice to return to SETUP.

Select the RS232 Output Device (Computer or Printer)

1. Press ↵ to display CHANGE Test ID.
2. Press ▶ until SETUP appears.
3. Press ↵.
4. Press ▶ until COM.DEV appears.
5. Press ↵. The display shows the current selection: PRINTR or COMPU.

6. Press ▲ or ▼ to change device.
7. Press ↵. COM.DEV is displayed.
8. Press ESC to return to SETUP.

Set the Baud Rate

Before transferring data to a computer or printer, you must set the baud rate to the speed at which your printer or computer will accept information.

1. Press ↵ to display CHANGE Test ID.
2. Press ▶ until SETUP appears.
3. Press ↵.
4. Press ▶ until BAUD appears.
5. Press ↵. The display shows the currently selected baud rate.
6. Press ▲ or ▼ to change the baud rate. Options are: 19200, 9600, 4800, 2400, and 1200.
7. Press ↵. BAUD is displayed.
8. Press ESC to return to SETUP.

Set the Format for Date and Decimal

The Format option lets you set the format for the date (mm/dd or dd/mm) and also for the delimiter (. or ,) the instrument uses.

1. Press ↵ to display CHANGE.
2. Press ▶ until SETUP appears.
3. Press ↵.
4. Press ▶ until FORMAT appears.
5. Press ↵. The currently selected format appears.
6. Press ▲ or ▼ to change the format. Options are:
   - Peri nndd (use a period for the delimiter and show date as month/day)
   - Peri ddnn (use a period for the delimiter and show date as day/month)
   - Conn nndd (use a comma for the delimiter and show date as month/day)
   - Conn ddnn. (use a comma for the delimiter and show date as day/month)
7. Press ↵ to select the new format. FORMAT is displayed.
8. Press ESC to return to SETUP.

Set Display Mode for Running Average or Single

If Single is selected, the instrument will show READY on its display, and will not start taking readings until READ is pressed.

If Running Average is selected, the instrument will constantly measure and display a running average. The READ button can then be used to stop and start the running average.

1. Press ↵ to display CHANGE Test Id.
2. Press ▶ until SETUP appears.
3. Press ↵.
4. Press ▶ until DS.MODE appears.
5. Press ↵. The display shows the currently selected display mode. Options are: RUNAVG and SINGLE.
6. Press ▲ or ▼ to change the display mode.
7. Press ↵. DS.MODE is displayed.
8. Press ESC to return to SETUP.

Select Discrete or Continuous Logging

Discrete logging means you have to press SAVE each time you want to save a displayed reading. Continuous logging means reading and saving is done automatically at the user-selectable Sample Logging Interval. Then the continuous logging is started and stopped by pressing SAVE.

1. Press ↵ to display CHANGE.
2. Press ▶ until SETUP appears.
3. Press ↵.
4. Press ▶ until LOG appears.
5. Press ↵. The display shows the currently selected option. Options are: DISCRT and CONTIN.
6. Press ▲ or ▼ to change the logging option.
7. Press ↵. If you selected DISCRT, LOG is displayed. Continue with step 9. If you selected CONTIN, the display shows LOG.INT to indicate you must enter a logging interval.
8. Press ▲ and ▼ to select the logging interval. Options are (in sec.): 10, 15, 20, 30, 60, 120, 180, 240, 300, 360, 420, 480, 540, and 600.
9. Press ↵. LOG is displayed.
10. Press ESC to return to SETUP.

Turn Back Pressure Compensation On and Off

Back pressure caused by flow through the capture hood can lower the flow being measured, causing measurement error. If it is desired to minimize this error, turn the back pressure compensation on.

1. Press ↵ to display CHANGE Test ID.

2. Press ▶ until SETUP appears.
3. Press ↵.
4. Press ▶ until BP.COMP appears.
5. Press ↵. The display shows whether back pressure compensation is on or off.
6. Press ▲ or ▼ to change the option. Options are: ON and OFF.
7. Press ↵. BP.COMP is displayed.
8. Press ESC to return to the main display.

Take Back Pressure Compensated Hood Readings

When back pressure compensation is turned on, the sequence of taking flow readings with the capture hood is somewhat different.

1. Open the flap in the capture hood base.
2. Hold the capture hood to the diffuser being measured to capture its air flow.
3. Press READ on the meter face or the red "Read Switch" on the left side of the hood base. READ OPEn flashes on the display.
4. When the open-flap reading is done, CLOSE tHE FLAP is displayed.
5. Close the flap and press READ (or the Read Switch). READ CLOSEd flashes on the display.
6. When the closed-flap reading is done, the backpressure compensated flow is displayed.
7. If you want to save the flow reading to log memory, press SAVE now. STORE is shown on the display, then the saved reading is shown.
8. Before pressing any more buttons, open the flap.
9. If the display mode is set to SINGLE, pressing READ now will start a new backpressure compensated reading.

   If the display mode is set to RUNAVG, pressing READ now will measure and display a running average of ***non-backpressure-compensated*** readings. Press READ once more to start a new backpressure compensated reading.

Set Deadband On and Off

The deadband determines the velocity or volume measurement threshold for displaying 0. If the deadband is ON, readings below 18 fpm (0.0914 m/s) or 18 cfm (30.58 m^3/h, 8.49 l/s) will be displayed as 0. If the deadband is OFF, readings down to 0 will be displayed. The default is set to ON.

1. Press ↵ to display CHANGE Test ID.
2. Press ▶ until SETUP appears.
3. Press ↵.
4. Press ▶ until DEADbAnd appears.
5. Press ↵. The display shows whether DEADbAnd is on or off.

6. Press ▲ or ▼ to change the option. Options are: ON and OFF.
7. Press ↵. DEADbAnd is displayed.
8. Press ESC to return to the main display.

Calibrate the Micromanometer (User Calibration)

A full instrument checkout and calibration with a calibration certificate is available from the factory. However, some users prefer to calibrate their own instruments. Pressure, temperature and humidity can be calibrated in the field.

1. Press ↵ to display CHANGE Test ID.
2. Press ▶ until CALIB appears.
3. Press ↵. The display shows CALIB plus which measurement is selected for calibration.
4. Press ▶ until the desired measurement to calibrate is shown.
5. Press ↵. The display shows SPAN and the requested calibration condition is shown on the bottom left. If the current measurement is available for display, it will be shown on the bottom right.
6. Try to expose the sensor being calibrated to a condition close to the requested calibration condition on the lower left. Press ▲ or ▼ to change the value shown on the lower left to the actual value you want the display to read under that condition.
7. Press ↵. The display will show the next desired span condition. Repeat steps 6–7 until the display shows DONE. If any errors are shown on the display it is because the user calibration data taken is too much different from the factory calibration data. Error codes are explained at the end of Chapter 7.

   Notes: *The calibration for the accessory temperature/humidity probe is saved on an EEPROM in the probe. If that probe is unplugged and used in a different micromanometer, the calibration will follow the probe. The calibration for the temperature probe is saved in the micromanometer. If those probes are unplugged and used in a different manometer, the calibration will* ***not*** *follow the probe.*

   The hood flow calibration is an offset from the factory calibration. An offset of ±12% can be applied to the hood flow measurement. With the hood icon on the display illuminated and the display showing FACTOR*, use the* UP *or* DOWN *key to adjust the offset facto, and press* ENTER *to accept. To return to the factory calibration, adjust the factor to 1.000 and press* ENTER *to accept.*

Select User Calibration or Factory Calibration

Performing a user calibration does not erase the factory calibration because the user calibration is saved in a different place than the factory calibration. It is possible to re-select whether the micromanometer uses the user or factory calibration at any time.

1. Press ↵ to display CHANGE Test ID.
2. Press ▶ until CALIB appears.
3. Press ↵. The display shows CALIB plus which measurement is selected for calibration.

4. Press ▶ until the display shows SOURCE U-F for the desired measurement.
5. Press ↵. The display shows SOURCE and whether USEr or FACt is selected for that measurement.
6. Press ▲ or ▼ to select USEr or FACt.
7. Press ↵ to save the selection.

Notes: *For the accessory temperature/humidity probe it is not possible to mix user and factory calibrations for the different measurements. For example, USEr cannot be selected for temperature with FACt selected for humidity.*

The hood flow calibration factor is applied when the offset factor is changed. There is no option to select USEr or FACt calibration for hood flow measurement. Set value to 1.000 to restore factory calibration.

Connect and Download Data to an Optional Printer

To connect a printer, use the RS232 printer cable supplied with the optional printer. Note that the printer interface cable is different from the computer interface cable.

The printer must be set to the same baud rate as the instrument. To change the baud rate of the printer, refer to the printer's operations manual. Always turn the instrument on ***before*** the printer. If the printer prints question marks (??????), asterisks (******), or random characters, reset it by turning it off and then on again. Figure 12 illustrates the printout information for a single sample.

```
---------------------------
MODEL: 8710 DP-Calc

SERIAL: 0404004
---------------------------
TEST ID:    2
Sample:    1
02/16/04
15:14:31      1.00 CFM
Shape=Round
Dia =   4.0  in. ø
Entered Temp=    74.4 °F
Baro. Press=  29.16 in.Hg
15:14:31      28.5 %rh
```

Figure 12: Sample Print Out

The Model 8710 allows printing of the entire memory, all Samples stored within a particular Test ID, or an individual Sample.

To print the entire memory, press and hold the key. This starts a countdown from 3 to 0 on the display. When the display shows "0", release the button. If you release the key at any time other than 0 during the countdown, nothing will print. The display will flash "Send dAtA" while printing.

To print all samples stored within a particular Test ID, first enter the RECALL menu. Select the desired Test ID to print using the up/down arrow keys. Then press and release the key. The display will flash “Send dAtA” while sending.

To print an individual sample, first enter the RECALL menu. Select the Test ID containing the desired sample using the up/down arrow keys and press ↵. Use the up/down arrow keys to scroll thru MIN, MAX, etc until the desired Sample is displayed. Then press and release the (print icon) key. The display will flash “Send dAtA” while sending.

Connect and Download Data to a Computer

Use the RS232 computer interface cable (provided) to connect the instrument to a COM port on the computer. A 9-pin to 25-pin adapter will be required if your computer has a 25-pin serial port connector.

The program “HyperTerminal®” which comes with Microsoft Windows® can be used for capturing data sent by the micromanometer. To send data from the micromanometer, use the printing function of the micromanometer, as shown above.

The program “LogDat™” which comes with your micromanometer can be used to assist in downloading data to a Windows®-based computer and formatting that data. To install LogDat software, run the SETUP.EXE file on the LogDat distribution disc. Once you open the program, it is self-directing and provides all the necessary instructions for downloading data.

Data Acquisition (Polling)

The micromanometer is designed to allow the user to perform polling through the use of a computer. The computer must send an upper case ‘V’ to the micromanometer while the micromanometer is taking measurements. The ‘V’ must be sent alone, without a carriage return or linefeed. The micromanometer will then output the values of the last measurements read. Note that the ‘V’ polling command will not start the micromanometer taking new measurements, therefore, it works much better if the micromanometer display mode is set to RUNAVG.

You must write your own program to use the ‘V’ polling command. Therefore this command is only designed for medium-to-advanced programmers who need real-time data acquisition. The ‘V’ polling command cannot be used to request logged data.

®HyperTerminal is a registered trademark of Hilgraeve, Inc.

®Windows is a registered trademark of Microsoft Corporation.

Chapter 5. Changing Flow Hoods

This chapter identifies the flow hood parts and gives instructions for assembling the flow hood.

Flow Hood Parts Identification

Figure 13 identifies the major parts of the capture hood, which are described in the following paragraphs. Before using the hood, please familiarize yourself with the various parts. You may also refer to Tables 1 through 3.

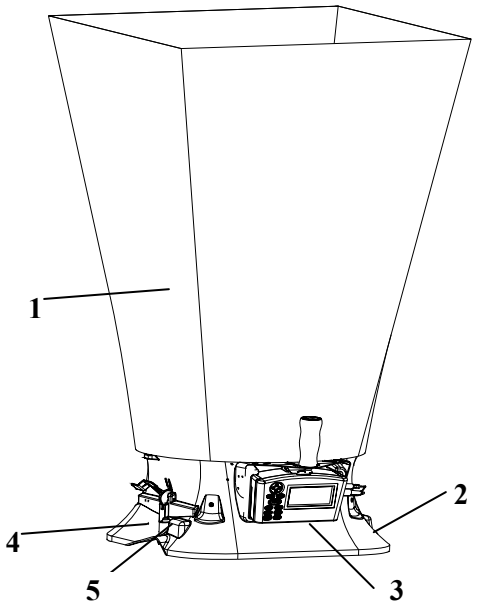

1 Fabric hood - Basic hood assembly
2 Base allows micromanometer to be attached
3 Micromanometer with display
4 Flap Actuator
5 Read Switch

Figure 13: Flow Hood Components

Hood Assembly

The Model 8375 Flow Hood is shipped from the factory partially assembled with the 2 ft × 2 ft (610 mm × 610 mm) nylon hood attached to the base. If you wish to use another hood size, see "Alternate Hood Installation," below.

To complete the assembly of the 2 ft × 2 ft (610 mm × 610 mm) hood, follow these six steps:

1. Place the base of the capture hood on the floor.
2. Lift the top of the fabric. Insert one end of a support pole into its pole mount in the base. There is a cup in each corner of the frame to accept the other end of each support pole.
3. Grasp the support pole. Bend the pole slightly to insert the top end of the pole into the support pole cup located in the opposite corner of the fabric frame. The poles are connected to the frame corners in a crisscross fashion as shown in Figure 14. The support poles always cross as pairs at the front and back of the fabric hood.

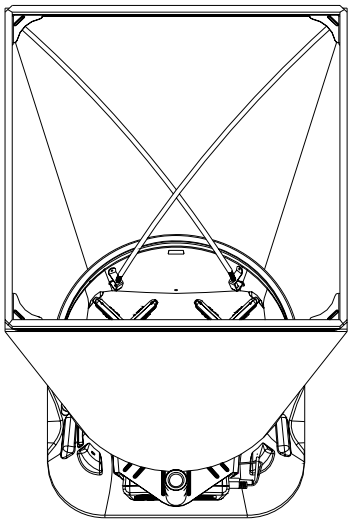

Figure 14: Installing a Support Pole

4. Insert the second support pole into the pole mount on the opposite side of the base.
5. Repeat step 3 for the second support pole.
6. Repeat steps 4 and 5 for the remaining two support poles.

Four other hood sizes are available from TSI and can be purchased separately. Available hood sizes are identified by the dimensions of the frame structure at the top of the hood and include 2 ft × 4 ft (610 mm × 1220 mm), 1 ft × 4 ft (305 mm × 1220 mm), 1 ft × 5 ft (305 mm × 1525 mm) and 3 ft × 3 ft (915 mm × 915 mm).

To change hood sizes, first remove the hood currently attached to the base. To remove the attached hood, first unlatch the cinch belt where the fabric is attached to the base. Then remove the fabric from its frame structure by pulling the shock cord out of the aluminum frame. Finally, fold up the fabric you just removed so that it can fit into one of the accessory pockets inside the carrying case. It is a good idea to fold the fabric so that the tag identifying its size remains visible for future reference.

Alternate Hood Installation

Refer to Figures 15 through 18 to determine the frame channels needed to assemble any of the standard sized frames. Select the pieces required for the frame size desired and assemble with the aid of the appropriate figure. Each channel is labeled with its number for easy identification. Several sections (numbers 1, 3, and 4) consist of a straight channel portion (each a different length) and a corner piece. This corner piece has an eyelet and slot arrangement which mates with a similar eyelet and slot at the end of the straight portion of the channel pieces (see Figure 19). These pieces can be slid together and are self locking by means of a retention spring. The arrangement forms a rugged frame which is additionally strengthened when the hood is attached.

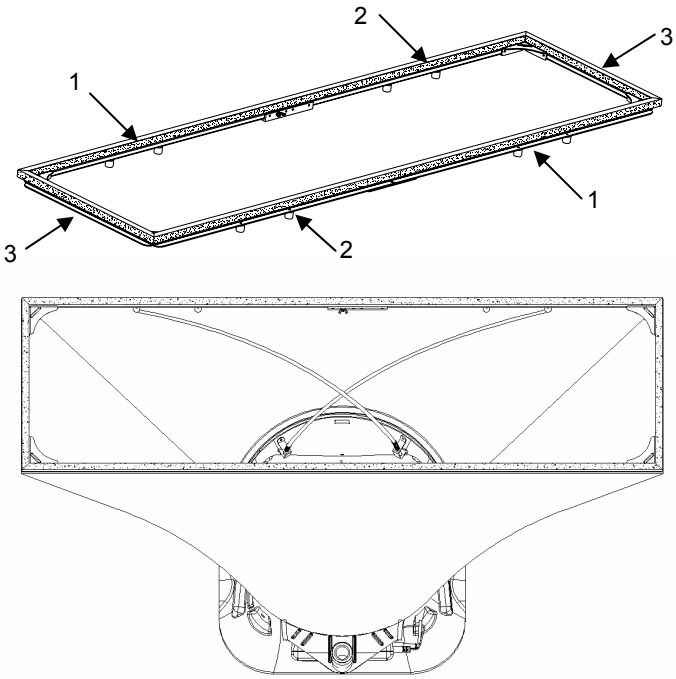

Figure 15: 1 ft × 4 ft (305 mm x 1220 mm) hood and frame. The support poles always cross as pairs at the front and back of the fabric hood. For the 1 ft × 4 ft (305 mm x 1220 mm), the support poles are inserted into the outside ferrule locations.

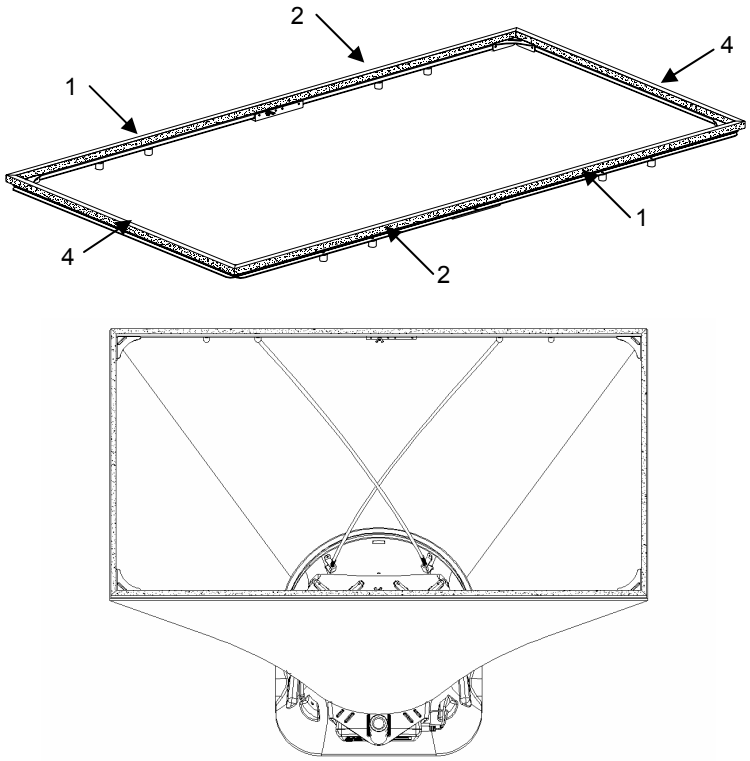

Figure 16: 2 ft × 4 ft (610 mm x 1220 mm) hood and frame. The support poles always cross as pairs at the front and back of the fabric hood. For the 2 ft × 4 ft (610 mm x 1220 mm), the support poles are inserted into the inside ferrule locations.

The number 1 and 5 channels also have a wing nut at the straight end which will mate with an angle and studs on the ends of numbers 2, 5 and 6 to form the longer frame sides (see Figure 20).

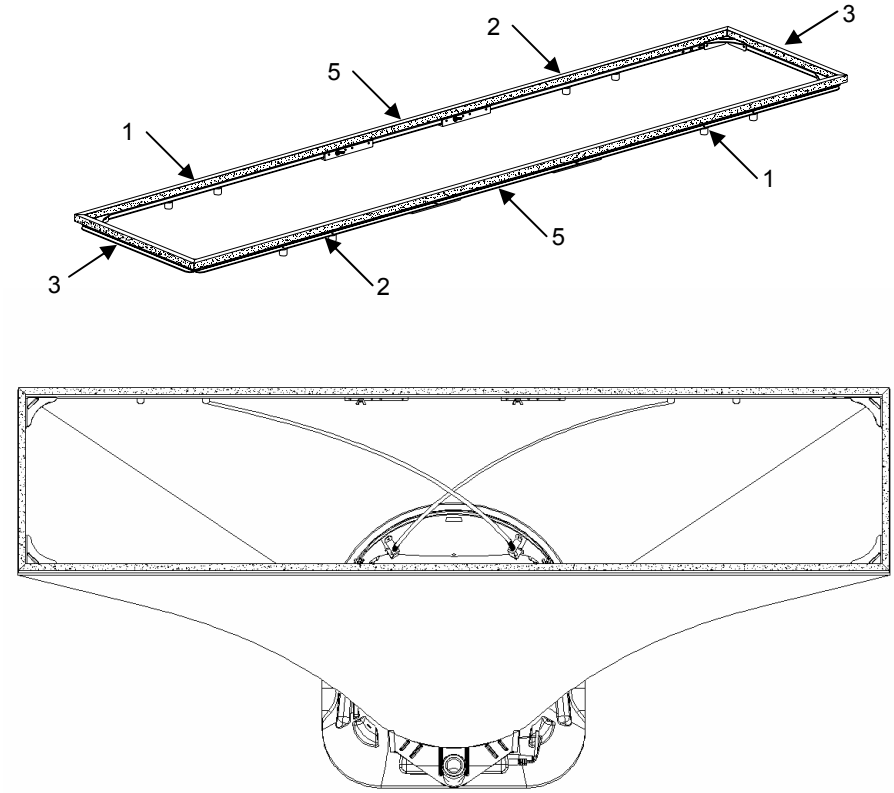

Figure 17: 1 ft × 5 ft (305 mm × 1525 mm) hood and frame. The support poles always cross as pairs at the front and back of the fabric hood. For the 1 ft × 5 ft (305 mm × 1525 mm), the support poles are inserted into the inside ferrule locations.

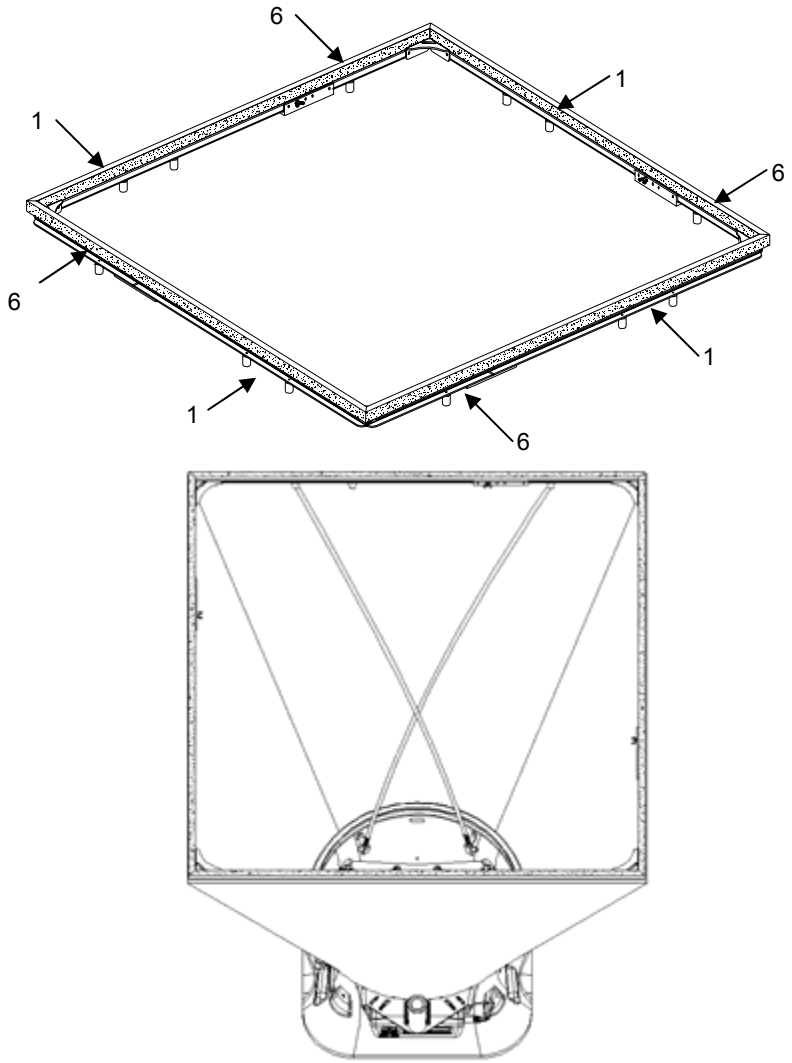

Figure 18: 3 ft × 3 ft (915 mm × 915 mm) hood and frame. The support poles always cross as pairs at the front and back of the fabric hood. For the 3 ft × 3 ft (915 mm × 915 mm), the support poles are inserted into the outside ferrule locations.

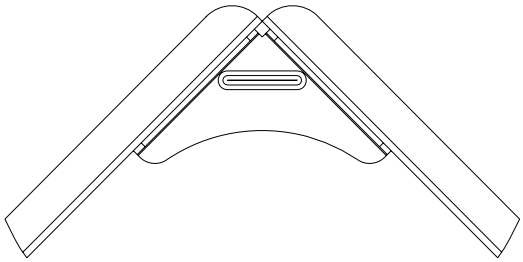

Figure 19: Frame Corner Assembly

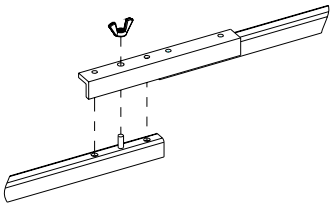

Figure 20: Frame Side Coupler Assembly

Each hood is constructed in a trapezoidal shape, sewn together so that one open end forms a round attachment to the base, and the other forms a square or rectangle large enough to fit its matching frame assembly. Around the frame end of the hood, an elastic shock cord has been sewn into the hood. This cord is of a size such that it can be pushed into the open side of the U-shaped channels of the frame.

In general, attach a hood to the frame first, and then to the base unit. By stretching around the frame corners the cord is slightly reduced in diameter and is easier to press into the frame channel.

Note: *The hood corners should always be aligned with the corners of the base, near the hood support brackets. The base has rivets located in the corners which can be used as a guide for aligning the hood corners.*

Direct Inflow Measurement Hood for Biological Safety Cabinets

The BSC hood kits for the Model 8375 ACCUBALANCE® balancing tool are designed to measure the inflow through a biological safety cabinet (see Figure 21). Part numbers and description of each kit can be found in Table 2 of this manual.

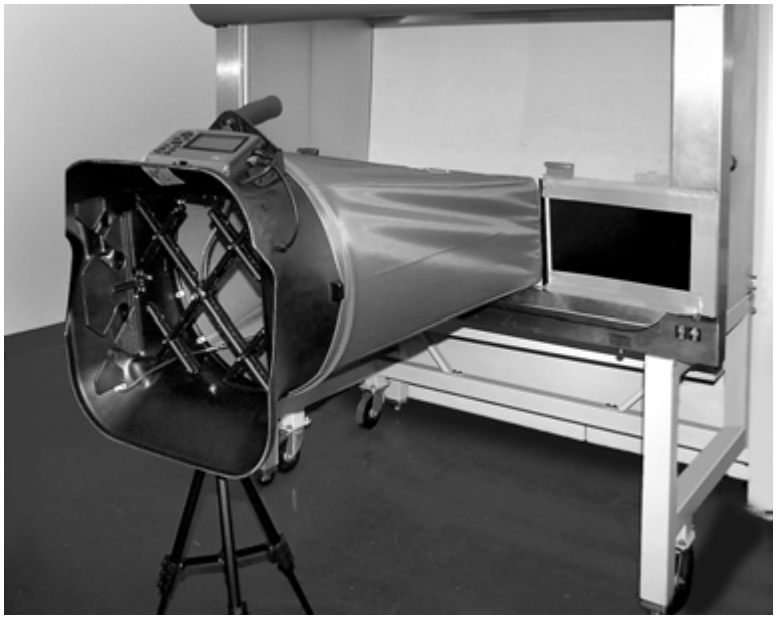

Figure 21: Direct Inflow Measurement Hood

The direct inflow BSC hood includes (see Figure 22):

- ❑ Fixed frame assembly with four removable flaps
- ❑ Fabric hood
- ❑ Hood support poles
- ❑ Base mounting hardware (threaded insert, washer, and screw)
- ❑ Telescopic pole stand with case to freely hold the 8710 Micromanometer in a vertical position when mounted to a biological safety cabinet or lab hood

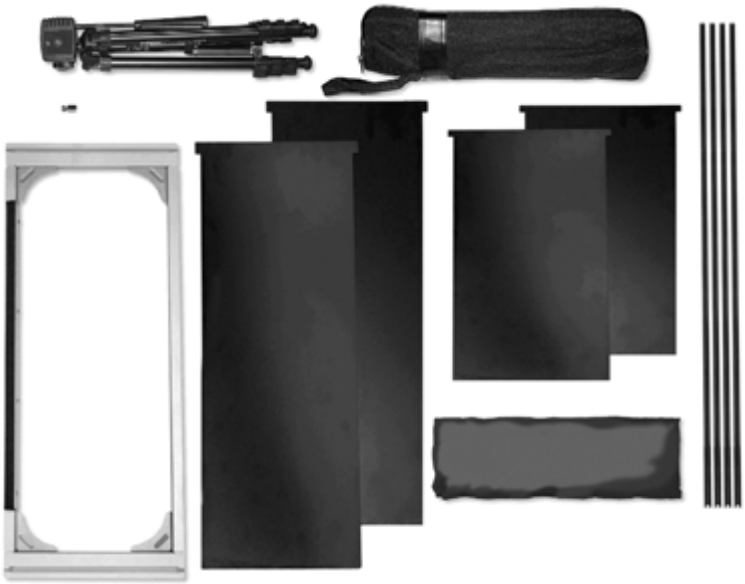

Figure 22: Direct Inflow Measurement Hood Components

To complete the assembly of the BSC hood, follow these seven steps:

1. Remove the plug located at the back of the base assembly and insert the Philips screw with washer into the hole from the inside of the base (see Figure 23). Place the threaded insert on the outside of the base opposite the screw and tighten with a Philips screwdriver.

Figure 23: Remove Plug Located at Back of Base Assembly

2. Attach the fabric hood and hood support poles to the frame and base assembly in the same manner as previously described for the other hood sizes.
3. Insert the flaps into the slots from the side of the frame where the fabric hood is attached to the U-channel of the frame (see Figure 24). Use the different flap lengths to fit various cabinet widths.

Figure 24: Attach Fabric Hood and Hood Support Poles to Frame and Base Assembly

4. Mount the Micromanometer base to the telescopic stand by fastening the screw on the telescopic stand to the threaded insert mounted on the base opposite the display/manometer (see Figure 25).

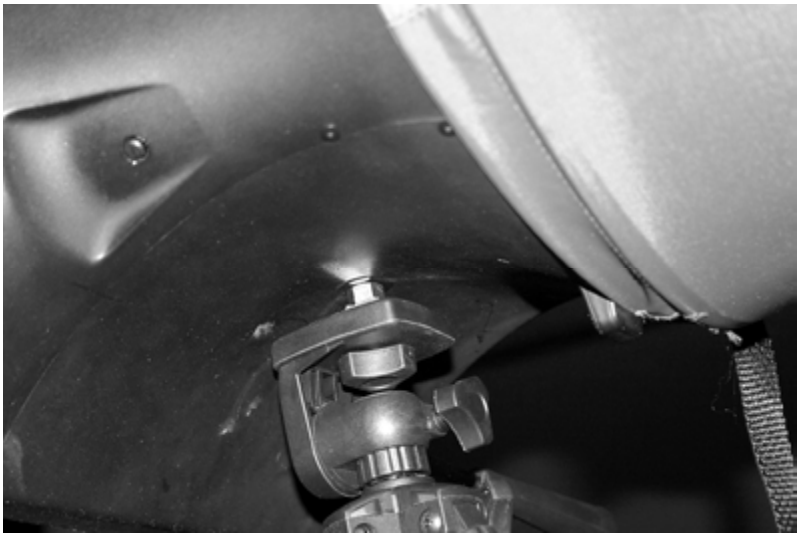

Figure 25: Mount Micromanometer Base to Telescopic Stand

5. Adjust the height and position of the telescopic stand so that the bottom part of the hood frame rests against the cabinet opening, and the Micromanometer is horizontal to the cabinet (see Figure 26).

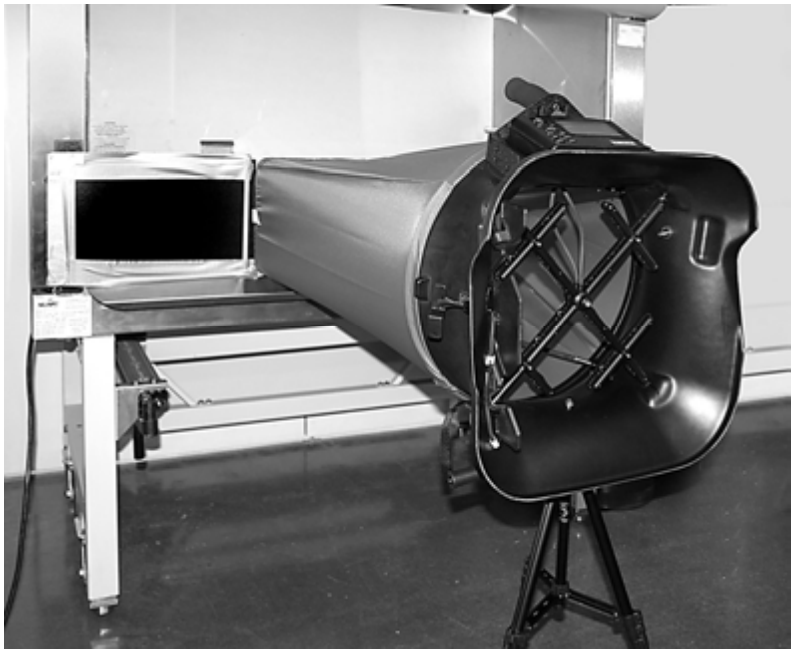

Figure 26: Adjust Height and Position of Telescopic Stand

6. Lower the sash of the cabinet until it rests on the foam lip of the hood frame (see Figure 27).

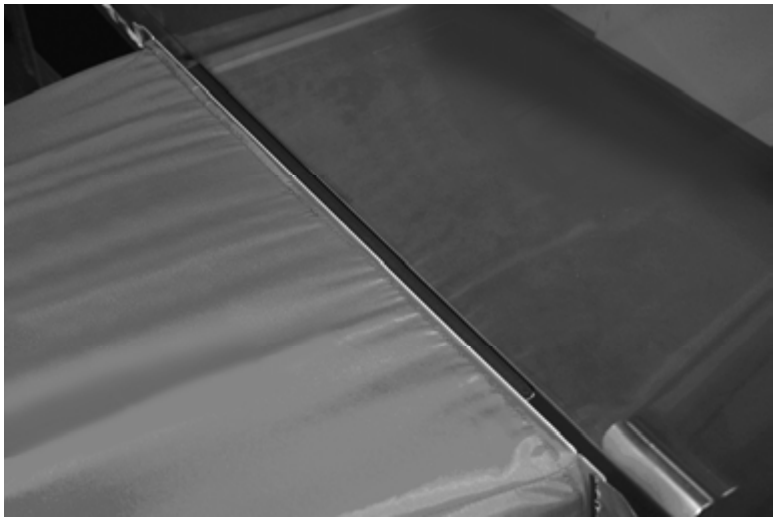

Figure 27: Lower Sash of Cabinet Until it Rests on Foam Lip of Hood Frame

7. Adjust the flaps to cover the opening of the cabinet. Tape the edges of the flaps to the sash and frame of the cabinet to create a tight fit. The unit is now ready to make measurements (see Figure 28).

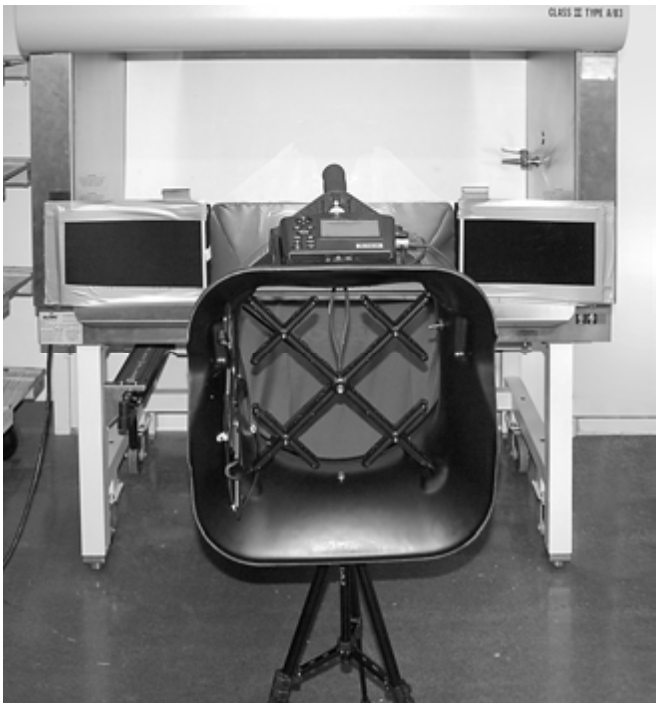

Figure 28: Unit Ready to Make Measurements

Chapter 6. Flow Measurements Using the Capture Hood

There are two methods of making flow measurements using the capture hood: Non-Backpressure Compensated and Backpressure Compensated methods (see "Appendix A. Back Pressure," for an explanation of the implications of capture hood-induced back pressure on the measured flow). Flows in both "Supply" and "Return" flow direction can be taken with either non-backpressure compensated or backpressure compensated mode.

Note: *"Return" flows will be indicated by a negative flow number, as long as the tubes leading to the Matrix manifold in the base are connected properly. The proper tube orientation is from the upper portion of the Matrix manifold leading to the positive "+" port on the back of the meter.*

	CAUTION
	WHILE USING THE ACCUBALANCE® AIR BALANCING INSTRUMENT TO TEST AIR FLOW IN DUCTS, YOU MAY COME INTO CONTACT WITH OR BE EXPOSED TO DUST, POLLEN, MOLD, FUNGUS, OR OTHER AIRBORNE CONTAMINANTS. IF YOU ARE OR MAY BE SENSITIVE TO DUST, POLLEN, MOLD, FUNGUS, OR OTHER AIRBORNE CONTAMINANTS, **ALWAYS** USE AN APPROPRIATE MASK OR RESPIRATOR WHILE EMPLOYING THE ACCUBALANCE® AIR BALANCING INSTRUMENT.

Non-Backpressure Compensated Measurements

To take non-backpressure compensated measurements, be sure the Back Pressure Compensation function is turned "OFF" (see "Turn Back Pressure Compensation On and Off" in Chapter 4).

Non-backpressure compensated measurements can only be made with the back pressure flap in the "OPEN" position. If you attempt to make a non-backpressure compensated measurement with the flap closed or partially closed, the meter will display the message "OPEN the FLAP".

In the non-backpressure compensated mode, it is possible to take either single measurements or running average measurements (see "Set Display Mode for Running Average or Single" in Chapter 4).

Single Measurements

"Single" measurements are individual flow measurements initiated by pressing either the "READ" button on the meter, or the red trigger button on the left side of the base. Depending on the flow being measured, a single reading will take from one to eight seconds to complete (lower flows take longer).

Note: Keep the hood in place during the entire measurement, otherwise the reading will be in error.

Running Average Measurements

In the "Running Average" measurement mode, the meter will constantly measure and display a running average of flow. This mode is useful when making adjustments to the flow.

If you wish to "hold" a particular value on the display, momentarily press either the "READ" key on the meter or the red trigger button on the base. To restart the running average measurements from a "held" value, simply press the "READ" key or the red trigger button again.

Note: *The running average utilizes a variable time constant determined by the meter (not user selectable) depending on the flow. At very low flows, under 100 ft^3/min, for example, the time constant is approximately 8 seconds. When using the "Running Average" mode for adjusting flows (setting or changing duct damper positions, for instance), keep in mind that there will be a lag time after flow adjustments are made for the meter to settle at any new flow reading.*

Backpressure Compensated Measurements

In most cases, backpressure compensated measurements will provide the most satisfactory flow measurement results.

In order to prepare for backpressure compensated measurements, be sure the Back Pressure Compensation function is turned "ON" (see "Turn Back Pressure Compensation On and Off" in Chapter 4).

Backpressure compensated measurements require two sequential measurements: first with the back pressure flap "OPEN" and then with the flap "CLOSED".

Here is the sequence of operation:

1. Place the capture hood over the diffuser, grille or other opening through which you wish to make a measurement.
2. Open the back pressure flap. This can easily be accomplished by pressing up on the flap handle with your left hand as you hold the hood in place. Press until the flap clicks into full open position.
3. Press the red trigger button. Again, this is easily accomplished with your left hand as you hold the hood in place. The message "READ OPEN" will flash as the meter takes its reading. (In very low flows, this step and step 5 may take as many as 8 seconds each. Higher flows will require less time.)
4. Wait for the message "CLOSE the FLAP", and then close the flap by pulling down on the flap handle until it clicks into the fully closed position.
5. Press the red trigger button. The message "READ Closed" will flash as the meter takes its reading.
6. The backpressure compensated measurement value will appear and remain on the display until another reading is initiated, or some other meter function is initiated.

Note: *It is important that the capture hood see the same flow for both parts of the backpressure compensated flow measurement. It is best to keep the hood in place for both measurements, but it is alright to remove and replace the hood between the two readings. However, if the flow is changed or changing during or between the two measurements, the measurement results will be inaccurate.*

Error Display

If the limits of allowed flow parameters are exceeded during a backpressure compensated measurement, an error message will be displayed. This can happen if there are flow reversals during the measurement or other changes in the flow during the measurement (such as changing a damper position), or as a result of other operator errors.

Chapter 7. Maintenance and Troubleshooting

The Model 8710 Micromanometer is designed for long-term field use. If used with reasonable care, it should be able to make precise measurements over a long time period. Some of the components can be cleaned periodically. When cleaning the components, please follow the instructions given below.

Fabric Hood

The hoods can be washed with mild detergent and cold water. When washing the hood, keep the hood away from objects with sharp corners or sharp edges. Careless cleaning may cause damage.

If the fabric gets ripped it should be replaced or repaired. Duct tape can be placed over the rip on both sides of the fabric for temporary repair.

To replace a damaged fabric or to order a different fabric size, contact your local TSI products distributor. To determine who your local TSI products distributor is, visit our website at www.tsi.com or you may call toll-free at (800) 874-2811.

If you wish to order a new hood fabric, use the following part numbers shown in Table 4.

Table 4: Hood Fabric Only Part Numbers

Fabric Hood Size	Part Number
2 ft × 2 ft (610 mm × 610 mm)	1801197
1 ft × 4 ft (305 mm × 1220 mm)	1801198
2 ft × 4 ft (610 mm × 1220 mm)	1801199
1 ft × 5 ft (305 mm × 1525 mm)	1801200
3 ft × 3 ft (915 mm × 915 mm)	1801210

Micromanometer

The micromanometer case, display screen and keys can be cleaned using a damp cloth with mild detergent solution. Do **not** immerse it in water. Wipe the unit dry before use.

Velocity Matrix Manifold

If you observe the flow sensing taps of the manifold becoming clogged with dust or other material, clean them with a damp cloth. The manifold should be kept in place during cleaning. Do **not** apply excessive forces on the grid of the manifold. If any part of the grid is damaged, please contact Customer Service for repair information.

Cases

If the instrument case or storage case needs cleaning, wipe it off with a soft cloth and isopropyl alcohol or a mild detergent.

Calibration

TSI recommends an annual calibration for the instrument. For a nominal fee, we will calibrate the unit and return it to you with a certificate of calibration and NIST traceability. This "annual checkup" assures you of consistently accurate readings. To calibrate the instrument, please ship the complete package that includes the meter, the base, the manifold and any fabrics used. Everything should be packed carefully within the carrying case and then inside a shipping box. The original shipping box is preferred. Prior to shipment, please visit our website at http://rma.tsi.com to complete an RMA# form online or contact Customer Service for an RMA (Return Materials Authorization) number at (651) 490-2811, (800) 874-2811.

Ship directly to: TSI Incorporated
ATTN: Customer Service
500 Cardigan Road
Shoreview, MN 55126-3996

Tables 6 and 7 list the symptoms, possible causes, and recommended solutions for common problems encountered with the instrument. If your symptom is not listed, or if none of the solutions solves your problem, please contact the factory.

Table 5: Troubleshooting the Instrument

Symptom	Possible Causes	Corrective Action
No display	Unit not turned on. Low or dead batteries. Dirty battery contacts. AC adapter not connected.	Press I/O key. Replace the batteries. Clean the battery contacts. Plug in AC adapter.
" " flashing on display	Low battery charge. Dirty battery contacts.	Replace or recharge the batteries. Clean the battery contacts.
"888888" flashing on display	The pressure is too high to measure. This same display is shown if measuring velocity or flow and the pressure at that velocity is too high.	The maximum pressure is shown on the specifications page.
"8888" flashing on display	The temperature is too high to measure.	The maximum temperature is shown on the specifications page.

Table 6 lists the possible error codes and their meanings. All error codes are preceded by 'ERR.'

Table 6: Error Codes

Error Code	Possible Causes	Corrective Action
10	The AC adapter voltage is too low. The NiMH batteries will not recharge fully with low AC adapter voltage.	Use correct AC adapter.
11	The AC adapter voltage is too high. The NiMH batteries will not fast-charge with high AC adapter voltage.	Use correct AC adapter.
12	Model number checksum error.	Return to factory.
13	Serial number checksum error.	Return to factory.
14	Accessory temperature/humidity probe checksum error for humidity.	Perform user calibration or return to factory.
15	Accessory temperature/humidity probe checksum error for temperature.	Perform user calibration or return to factory.
16	Accessory temperature probe calibration checksum error.	Perform user calibration or return to factory.
18	Pressure sensor calibration checksum error.	Perform user calibration or return to factory.
19	A to D converter calibration checksum error.	Return to factory.
20	Barometric pressure sensor calibration checksum error.	Return to factory.
30	Pressure calibration voltage at 1 in. H_2O must be less than pressure calibration voltage at 5 in. H_2O.	Make sure calibration pressures are correct.
31	Pressure calibration voltage at 5 in. H_2O must be less than pressure calibration voltage at 15 in. H_2O.	Make sure calibration pressures are correct.
32	While performing user calibration of accessory temperature/humidity probe, the correct probe was not found.	The accessory temperature/humidity probe was either not plugged in or is faulty.
33	While performing user calibration of accessory temperature sensor, the accessory temperature/humidity probe was found instead.	Plug in the selected probe.
34	Barometric pressure measured was <15.00 in. Hg.	The barometric pressure is too low to take a reading.
35	Barometric pressure measured was >40.00 in. Hg.	The barometric pressure is too high to take a reading
36	Flap closed pressure was < flap open pressure, or flap open versus flap closed pressure ratio exceeds allowed limits.	Take data again.

Error Code	Possible Causes	Corrective Action
37	There was an error reading the AD7708 A to D converter.	Return to factory if error re-occurs.
38	There was an error reading the AD7718 A to D converter.	Return to factory if error re-occurs.
39,40, 41,42	Error in logged data.	If using accessory temp/humidity probe, make sure probe securely connected. Erase logged data.
43	Could not send RS232 data because the receiving device was busy >10 seconds.	Make sure printer or computer is ready to receive. Check RS232 interface cable.
50	Pressure sensor zero voltage is too high.	Return to factory if error re-occurs.
51	Pressure sensor gain out of range.	Perform user calibration or return to factory.
52	Lithium battery voltage is too low.	Replace lithium battery or return to factory.
53	AD7708 A to D converter calibration factor out of range.	Return to factory.
54	AD7718 A to D converter calibration factor out of range.	Return to factory.
55	User entered flow temperature out of range.	The micromanometer has reset the temperature to 70.0°F (21.1°C) to correct it.
56	Barometric pressure zero factor out of range.	Return to factory.
57	Barometric pressure span factor out of range.	Return to factory.
58	Offset factor for user temperature sensor calibration out of range.	Re-do user calibration, set temperature sensor calibration to FACT, or return to factory.
59	Slope factor for user temperature sensor calibration out of range.	Re-do user calibration, set temperature sensor calibration to FACT, or return to factory.
60	Humidity sensor voltage at 20% RH out of range.	Perform user calibration or return to factory.
61	Humidity sensor voltage at 80% RH out of range.	Perform user calibration or return to factory.
62	Pressure sensor gain factor A out of range.	Perform user calibration or return to factory.
63	Pressure sensor gain factor B out of range.	Perform user calibration or return to factory.
64	Pressure sensor gain factor C out of range.	Perform user calibration or return to factory.

Error Code	Possible Causes	Corrective Action
68	Pressure sensor divider calibration out of range.	Return to factory.
69	A to D reference voltage out of range.	Return to factory.
70	5V reference voltage out of range.	Return to factory.
71, 72	An invalid K-Factor was corrected.	The micromanometer has set the K-factor to 1.0 to correct it.
74	Pressure voltage for user pressure calibration out of range.	Re-do user calibration.
75	User temperature calibration >5°F (3°C) different from factory calibration.	Re-do user calibration. Replace temperature probe.
>100	Internal program error.	Please contact the factory.

Appendix A. Back Pressure

The quantity of air flowing through a supply diffuser or a return grille is reduced to some extent whenever a capture hood is placed over the flow opening. The amount of flow reduction will vary depending on the combined effects of the diffuser/grille resistance, the capture hood resistance, and the flow rate.

The Modular Air Balancing Tool features a built-in capability to make flow measurements which are compensated for the effects of the capture hood-induced back pressure. This is accomplished by taking two sequential flow measurements at a diffuser or grille, the first with the back pressure flap "OPEN" and the second with the flap "CLOSED". The resulting Backpressure Compensated Flow displayed by the meter represents the air flow through the diffuser/grille in its original state, that is, without the presence of the capture hood.

Verifying Flow Measurements

It is always the recommended practice to verify the flow measurements obtained with a capture hood by performing appropriate* multi-point, in-duct velocity traverses using a Pitot-static tube or a thermal anemometer.

We recommend the use of the Log-linear method when traversing a round duct, and the Log-Tchebycheff method when traversing a rectangular duct.

*We recommend that you refer to the most up-to-date copy of the duct traverse specification you require from an approved regulatory or professional organization.

Appendix B. Actual vs. Standard Air Velocity and Flow Measurements

Actual Air Velocity is also known as the "local" air velocity. It can be thought of as the speed of a microscopic dust particle being carried along in the air stream.

Actual Air Velocity is measured with a Pitot tube using the basic formula:

$$V_{ACT} = 1096.7 \times \sqrt{\frac{VP}{\rho_{air}}} \qquad \text{Eq. (1)}$$

where: V_{ACT} is Actual Air Velocity, in units of (Actual Feet per Minute)
VP is Velocity Pressure, measured in units of (in. H_2O)
ρ_{air} is the air density, in units of (lb_m/ft^3)

Air density, ρ_{air}, can be calculated from the equation:

$$\rho_{air} = 1.325 \times \frac{P_{ACT}}{T_{ACT} + 460} \qquad \text{Eq. (2)}$$

where: P_{ACT} is the atmospheric pressure, in units of (in. Hg)
T_{ACT} is the local air temperature, in units of (°F)

Standard Air Velocity is also known as the mass velocity of air. It can be thought of as the local air velocity corrected to standard conditions of air. Standard Conditions are defined as air at 70°F and P_{STD} = 29.92 in. Hg.

Substituting Standard Conditions into Eq. (2) above we can see that:

$$\rho_{air_{STD}} = 1.325 \times \frac{29.92}{70 + 460} = 0.0748 \frac{lb_m}{ft^3} \qquad \text{Eq. (3)}$$

Standard Air Velocity and Standard Air Flow are often the preferred units of measure when evaluating Heating, Ventilating and Air-Conditioning (HVAC) system performance because the heat-carrying capacity (and cooling capacity) of air is directly related to Standard, not Actual, units of measure.

Converting between Standard and Actual units of measure simply involves an inverse air density ratio, as follows.

From the continuity of mass equation, we can state the following:

$$\rho_{air_{ACT}} \times V_{ACT} = \rho_{air_{STD}} \times V_{STD} \qquad \text{Eq. (4)}$$

Thus, to convert from Actual Velocity to Standard Velocity, use the following equation:

$$\frac{\rho_{air_{ACT}}}{\rho_{air_{STD}}} \times V_{ACT} = V_{STD} \qquad \text{Eq. (5)}$$

Substituting known values into Eq. (5), we get:

$$\frac{P_{ACT}}{T_{ACT} + 460} \times \frac{70 + 460}{29.92} \times V_{ACT} = V_{STD}$$

or,

$$V_{ACT} \times \frac{P_{ACT}}{T_{ACT} + 460} \times 17.714 = V_{STD} \qquad \text{Eq (6)}$$

where: P_{ACT} is the local atmospheric pressure, as measured by the micromanometer, for example, in units of (in. Hg)
T_{ACT} is the local temperature of the air flow being measured, in units of (°F)
V_{ACT} is Actual Air Velocity, in units of (AFPM)
V_{STD} is Standard Air Velocity, in units of (SFPM)

Similarly, to convert from Standard to Actual Air Velocity, use the following equation:

$$V_{STD} \times \frac{T_{ACT} + 460}{P_{ACT}} \times 0.05645 = V_{ACT} \qquad \text{Eq (7)}$$

For Volumetric Flow measurements, the analysis is exactly the same.

Thus:

$$Flow_{ACT} \times \frac{P_{ACT}}{T_{ACT} + 460} \times 17.714 = Flow_{STD} \qquad \text{Eq (8)}$$

$$Flow_{STD} \times \frac{T_{ACT} + 460}{P_{ACT}} \times 0.05645 = Flow_{ACT} \qquad \text{Eq (9)}$$

where: $Flow_{ACT}$ is Actual Air Flow, in units of (ACFM)
$Flow_{STD}$ is Standard Air Flow, in units of (SCFM)

***Note**: The Model 8170 performs these calculations automatically. You can choose to view velocity or flow measurements in either "Actual" or "Standard" units of measure.*

Model 8710 DP-CALC™ Micromanometer and Model 8375 ACCUBALANCE® Modular Air Balancing Tool

Specifications*

Range

Differential pressure	±15 in. H_2O (3735 pa); 150 in. H_2O maximum safe operating pressure
Absolute pressure	15 to 40 in. Hg (356 to 1016 mm Hg)
Velocity	25 to 8,000 ft/min (0.125 to 40 m/s) pitot probes; 25 to 5,000 ft/min (0.125 to 25 m/s) air flow probe; 25 to 2,500 ft/min (0.125 to 12.5 m/s) velocity matrix
Volume	25 to 2,500 ft^3/min (42 to 4250 m^3/h) capture hood
Temperature	-40 to 250°F (-40 to 121°C) temperature probe 14 to 140°F (-10 to 60°C) temperature/RH probe 40 to 140°F (4.4 to 60°C) operating (electronics)
Storage temperature	-4 to 160°F (-20 to 71°C)
Rh	0 to 95% RH temperature/RH probe

Resolution

Pressure	0.00001 in. H_2O (0.001 pa) static and differential; 0.01 in. Hg (1 mm Hg) absolute
Velocity	1 ft/min (.01 m/s)
Volume	1 ft^3/min (1 m^3/h)
Rh	0.1% RH
Temperature	0.1°F (0.1°C)

Accuracy

Pressure	±2% of reading ±0.001 in. H_2O (0.25 pa) static and differential; ±2% of reading absolute
Velocity	±3% of reading ±7 ft/min (0.04 m/s) >50 ft/min (>0.25 m/s)
Volume	±3% of reading ±7 ft^3/min (12 m^3/h) >50 ft^3/min (>85 m^3/h)
Rh	±3% RH
Temperature	±0.5 °F (0.3°C) from 32 to 160°F (0 to 71°C); max ±2.0 °F (1.2°C) from -40 to 32°F (-40 to 0°C) and from 160 to 250°F (71 to 121°C)

Units

Pressure	in. H_2O, pa, hPa, kPa, mm Hg, in. Hg, cm Hg, mm H_2O, cm H_2O
Velocity	ft/min, m/s
Volume	ft^3/min, m^3/h, m^3/min, l/s
Temperature	degrees F, degrees C
Statistics	min, max, average up to 1000 readings
Data Storage	1000 readings, time and date stamped
Logging Interval	user selectable (10 to 600 seconds)
Response Time	2 to 8 seconds
Display	6 digit, 0.75 in. character height, multi-line, sectored, multiple symbolic icons, high-contrast backlit LCD

Dimensions

(micromanometer only)	7.4 in. × 4.5 in. × 2.3 in. (18.8 cm × 11.4 cm × 5.8 cm)
Pressure connection	¼ in. OD straight ports for use with 3/16 in. ID flexible tubing
Weight with batteries	8710 17 oz (0.5 kg); 8375 7.4 lb (3.4 kg)
Power requirements	four AA-size cells, rechargeable NiMH (included) or alkaline, or AC adapter (included), 7.5 VDC, 1.6 A, regulated
Battery life	minimum of 12 hours typical
Recharge time	1 hour (external charger); 4 hours (internal charger)

Hood sizes available

Standard	2 ft × 2 ft (610 mm × 610 mm)
Optional	2 ft × 4 ft (610 mm × 1220 mm); 1 ft × 4 ft (305 mm × 1220 mm); 1 ft × 5 ft (305 mm × 1525 mm); 3 ft × 3 ft (915 mm × 915 mm)
RS232C output	ASCII character codes; 1200, 2400, 4800, 9600, 19200 baud rate (selectable) no parity 8 data bits 1 stop bit no handshaking
Warranty	2-year factory warranty

Specifications are subject to change without notice.

TSI Incorporated – 500 Cardigan Road, Shoreview, MN 55126 U.S.A

USA	**Tel:** +1 800 874 2811	**E-mail:** info@tsi.com	**Website:** www.tsi.com
UK	**Tel:** +44 149 4 459200	**E-mail:** tsiuk@tsi.com	**Website:** www.tsiinc.co.uk
France	**Tel:** +33 491 11 87 64	**E-mail:** tsifrance@tsi.com	**Website:** www.tsiinc.fr
Germany	**Tel:** +49 241 523030	**E-mail:** tsigmbh@tsi.com	**Website**: www.tsiinc.de
India	**Tel:** +91 80 41132470	**E-mail:** tsi-india@tsi.com	
China	**Tel:** +86 10 8260 1595	**E-mail:** tsibeijing@tsi.com	

Contact your local TSI Distributor or visit our website **www.tsi.com** for more detailed specifications.

TRUST. SCIENCE. INNOVATION.

P/N 1980525 Rev E Copyright © 2009 by TSI Incorporated Printed in U.S.A.