BUILDER ENERGY CODE TRAINING

2005 CODES & STANDARDS

PAID FOR BY:

THE CALIFORNIA ENERGY COMMISION

Presented By:

ConSol
7407 Tam O' Shanter Dr.
Stockton, Ca 95210
(209) 473-5000
(209) 474-0817 Fax
www.consol.ws

Builder Energy Code Training

Evaluations

Slide Presentation

Management:
Building Industry Institute
1215 K Street, Ste. 1200
Sacramento, Ca 95814

Compliance Forms

Trainers:
Don Mull

ConSol
7407 Tam O' Shanter Dr.
Stockton, Ca 95210
(209) 473-5000
(209) 474-0817 Fax

Scope of Work

Reference Materials and Miscellaneous Information

Building Industry Institute

1215 K Street, Suite 1200
Sacramento, CA 95814
(916) 443–7933

Builder Energy Code Training
Training Evaluation

Your title or position. _____

1. Please rate the following:

Presenter:	*Poor*				*Excellent*
Knowledge	1	2	3	4	5
Delivery	1	2	3	4	5
Language	1	2	3	4	5
Enthusiasm	1	2	3	4	5

Materials:	*Poor*				*Excellent*
Slide Show:					
Content	1	2	3	4	5
Relevance	1	2	3	4	5
Organization	1	2	3	4	5
Level of detail	1	2	3	4	5
Clarity/understandability	1	2	3	4	5
Manual:					
Content	1	2	3	4	5
Relevance	1	2	3	4	5
Organization	1	2	3	4	5
Level of detail	1	2	3	4	5
Clarity/understandability	1	2	3	4	5

Program as a whole:	*Poor*				*Excellent*
Usefulness to my job	1	2	3	4	5
Usefulness to others in my company	1	2	3	4	5

2. Is this your first experience with on-line training?_____

3. Did the class meet your expectations: Yes No, (Please explain)
_____

4 What, if anything, would you change and how?_____
_____
_____

5 Was there any area on which you would like more information?
_____
_____

If so, please give your:

Name: _____ Phone: _____

How did you hear about the training? ConSol____ Phone____ Mailer____ Email____ BIA____
CEC____ Website____ Newsletter____ Magazine____ Other:_____

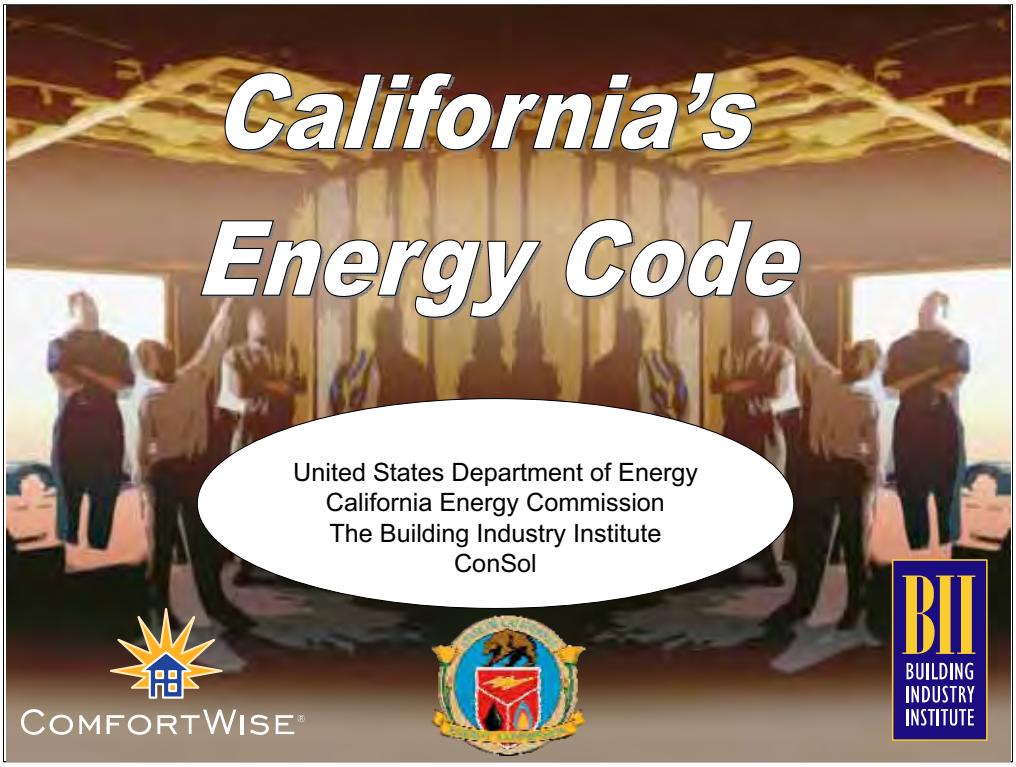

This presentation is sponsored and paid for by the U.S. Department of Energy and the California Energy Commission.

HAVE EACH PARTICIPANT INTRODUCE HIM/HER SELF

Name, jurisdiction, level of experience with T-24, (*Expert, Intermediate, Novice.)*

THIS IS AN ADVANCED CLASS.

YOUR QUESTIONS ARE A NECESSARY PART OF THE CLASS, PLEASE DO NOT HESITATE TO ASK.

PROGRAM BACKGROUND

Started 1995 by CEC, USDOE, BII, CPUC, ConSol

Only field superintendents in Central Valley

Now:

- CEC Webinar
- Builder Classroom
- Builder On-site
- Jurisdiction Classroom

Agenda

- 2005 Residential En. Eff. Standards
- Compliance Strategy
- Lighting
- Quality Construction
- HERS Rating
- Plan Check
- Inspection

We will be about 3 hours.

2 breaks.

GIVE SHORT HISTORY OF @ BULLET

DESCRIBE TYPICAL PROBLEMS:

LIGHTING (<u>2001 CODE INSTEAD OF 2005</u>)

Low compliance with 2001 Kitchen & Bath lighting standard.

INSULATION INSTALLATION (<u>VOIDS, COMPRESSIONS, SHORT CUTS</u>)

LACK OF COMMUNICATION WITH SUBS (<u>HVAC vs. SHEETROCK re SEALING BOOTS TO DRYWALL</u>)

Key Definitions

- California Energy Commission (CEC)
- Title 24: Energy Code
- Budget: Annual Energy (kBtu/sf/yr)
- Credit: Energy trade-off for more efficient features

State Energy Resources Conservation and Development Commission

California Code of Regulations Title 24, Part 6

DEFINE BUILDING DEPARTMENT'S ROLE:

PLAN CHECKERS' ROLE – VERIFY THAT ALL T-24 REQUIREMENTS ARE ADDRESSED *(MF-1R, CF-1R, WS-5, C-2R & 3R eliminated)*

INSPECTORS' ROLE – CONFIRM THAT T-24 MEASURES ARE INSTALLED PER CF-1R, MATCH CF-4R TO CF-6R AS APPROPRIATE

DEFINE:

"YOU, US, BUILDERS, INSPECTORS" etc.

QUESTIONS?

2005 Energy Code

Implementation Date: Oct 1st 2005

- Energy Impact: 15% increase
- Cost Impact*: $1800 to 4600 +
- New Mandatory Measures
- Prescriptive Package Changes
- Time Dependant Valuation (TDV)

The cost of this code change depends greatly on the implementation strategy.

$1,800 – $4,600

CAVEATS

***** Based upon over 100,000 computer runs using Micropas 7.0 on a 1940 sq. ft. two-story house, on a slab, with 19.5% glazing, in Climate Zone 12, run by ConSol Consulting analysts after software was approved.

LIGHTING COST ESTIMATE IS PROBABLY LOW

TDV = MAJOR PHILOSOPHICAL CHANGE TO CALCULATIONS

Time Dependant Valuation (TDV)

- 2001 Standards
  - Analyzed Source Energy Use
- 2005 Standards
  - Measure TDV Energy Use
  - Weighted Energy Use
    - On Peak Energy = More Critical
    - Off Peak Energy = Less Critical

TDV Energy Definition: Is the time varying energy caused to be used by the building to provide space conditioning and water heating and for specified buildings lighting. TDV energy accounts for the energy used at the building site and consumed in producing and in delivering energy to a site, including, but not limited to, power generation, transmission and distribution losses.

YOUR ARE GOING TO HAVE TO REEVALUATE YOUR COMPLIANCE STRATEGIES TO MAXIMIZE YOUR COST vs. BENEFITS.

QUESTIONS?

"Grandfathering" Prohibited

Q. If the application for a master plan community was submitted before October 1st 2005 can all of the homes under that master plan be built under the 2001 energy Standards, even though the build-out of the subdivision may take several years?

A. No, each building in the master plan must comply with the current codes at the time each building permit application is submitted. The date of the application for the actual building permit is the requirement of the law. Master Plans submitted (or approved) for Plan Check do not constitute a building permit application. The effective date of the new 2005 Energy Efficiency Standards for residential and nonresidential buildings is October 1, 2005. Builders often build 20 or so buildings at a time and submit applications for permits, pay fees, etc. at the time each phase of construction is set to begin. If the applications for a building permit for each of those buildings are all submitted prior to the effective date of the new Standards, then those buildings can show compliance under the 2001 Standards. Any application for a building permit for a particular building that is submitted after October 1, 2005 must comply with the 2005 Standards.

SUBCHAPTER 1, SECTION 100 – SCOPE

CEC Blueprint # 82.

SEE RESIDENTIAL MANUAL, SECTION 5, et seq. FOR THE COMPLETE TEXT OF THE CEC POSITION ON THIS ISSUE.

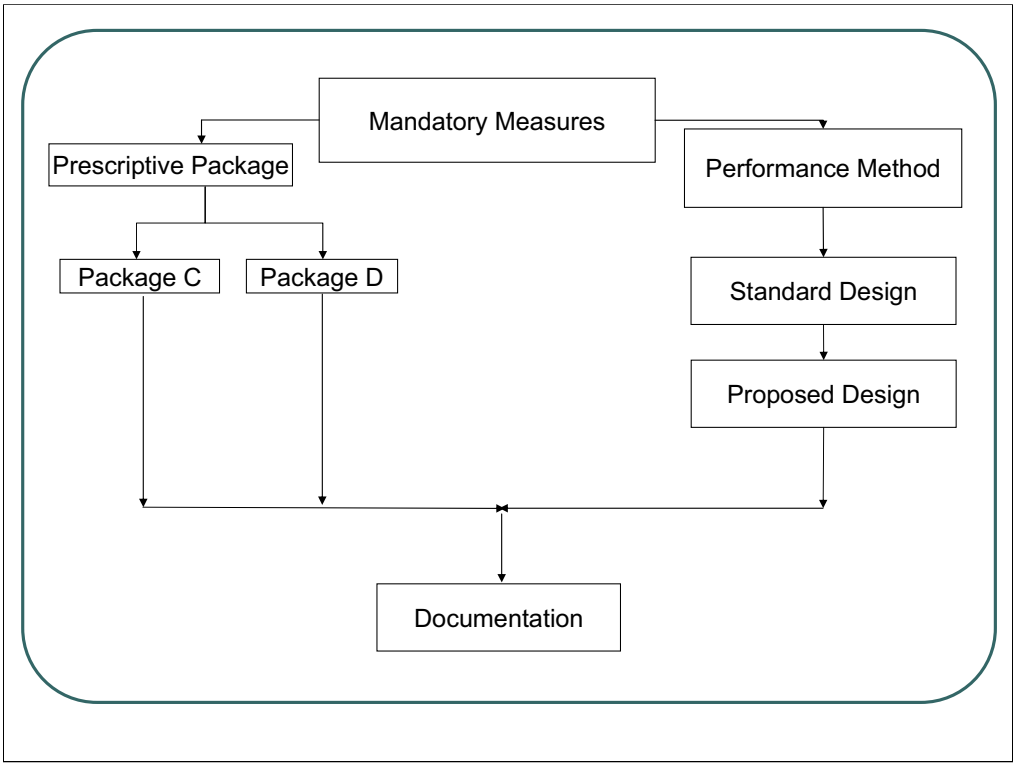

PRESCRIPTIVE OR PERFORMANCE METHODS ADD TO MANDATORY MEASURES

PACKAGE "C" only available where no natural gas and none likely per local utility (not common)

PACKAGE "D"

Simplest/least flexible

Requires HERS Rater to test air distribution systems and/or A.C's Heat Pumps for RCA or TXV for at least a sample of homes

Alternatives to HERS RATER may be – more efficient fenestration and space conditioning equipment

Variations are required in all Climate Zones (Alternative Prescriptive Package D)

QUALITY CONSTRUCTION MAY BE AVAILABLE AS A CREDIT (TIGHT DUCTS &/OR TXV/RCA)

COMPLIANCE DOCUMENTATION

MF-1R Mandatory Features

CF-1R Climate Zone, Package and features to meet package are specified

PERFORMANCE METHOD ALLOWS TRADEOFFS among different building features

Compares your PROPOSED DESIGN to a STANDARD

Prescriptive Package D

TABLE 151-C ALTERNATIVE COMPONENT PACKAGE D

Climate Zone	1	2	3	4	5	6	7	8	9	10	11	12	13	14	15	16
BUILDING ENVELOPE																
Insulation minimums[a]																
Ceiling	R38	R30	R30	R30	R30	R30	R30	R30	R30	R30	R38	R38	R38	R38	R38	R38
Wood-frame walls	R21	R13	R13	R13	R13	R13	R13	R13	R13	R13	R19	R19	R19	R21	R21	R21
"Heavy mass" walls	(R4.76)	(R2.44)	(R2.44)	(R2.44)	(R2.44)	(R2.44)	(R2.44)	(R2.44)	(R2.44)	(R2.44)	(R4.76)	(R4.76)	(R4.76)	(R4.76)	(R4.76)	(R4.76)
"Light mass" walls	NA	NA	NA	NA	NA	NA	NA	NA	NA	NA	NA	NA	NA	NA	NA	NA
Below-grade walls	R0	R0	R0	R0	R0	R0	R0	R0	R0	R0	R0	R0	R0	R0	R0	R13
Slab floor perimeter	NR	NR	NR	NR	NR	NR	NR	NR	NR	NR	NR	NR	NR	NR	NR	R7
Raised floors	R19	R19	R19	R19	R19	R19	R19	R19	R19	R19	R19	R19	R19	R19	R19	R19
Concrete raised floors	R8	R8	R0	R0	R0	R0	R0	R0	R0	R0	R8	R4	R8	R8	R4	R8
Radiant Barrier	NR	REQ	NR	REQ	NR	NR	NR	REQ	REQ	REQ	REQ	REQ	REQ	REQ	REQ	NR
FENESTRATION																
Maximum U-factor[d]	0.57	0.57	0.67	0.67	0.67	0.67	0.67	0.67	0.67	0.57	0.57	0.57	0.57	0.57	0.57	0.55
Maximum Solar Heat Gain Coefficient (SHGC)[e]	NR	0.40	NR	0.40	NR	NR	0.40	0.40	0.40	0.40	0.40	0.40	0.40	0.40	0.40	NR
Maximum total area	20%	20%	20%	20%	20%	20%	20%	20%	20%	20%	20%	20%	20%	20%	20%	20%
Maximum West facing area	NR	5%	NR	5%	NR	NR	5%	5%	5%	5%	5%	5%	5%	5%	5%	NR
THERMAL MASS[f]	NR	NR	NR	NR	NR	NR	NR	NR	NR	NR	NR	NR	NR	NR	NR	NR
SPACE-HEATING[g]																
Electric-resistant allowed	No	No	No	No	No	No	No	No	No	No	No	No	No	No	No	No
If gas, AFUE =	MIN	MIN	MIN	MIN	MIN	MIN	MIN	MIN	MIN	MIN	MIN	MIN	MIN	MIN	MIN	MIN
If heat pump, HSPF[h] =	MIN	MIN	MIN	MIN	MIN	MIN	MIN	MIN	MIN	MIN	MIN	MIN	MIN	MIN	MIN	MIN
SPACE-COOLING																
SEER =	MIN	MIN	MIN	MIN	MIN	MIN	MIN	MIN	MIN	MIN	MIN	MIN	MIN	MIN	MIN	MIN
If split system, Refrigerant charge measurement or Thermostatic Expansion valve	NR	REQ[i]	NR	NR	NR	NR	NR	REQ[i]	REQ[i]	REQ[ii]	REQ[ii]	REQ[ii]	REQ[ii]	REQ[ii]	REQ	NR
DUCTS																
Duct sealing	REQ[j]	REQ[j]	REQ[ii]	REQ[ii]	REQ[ii]	REQ[ii]	REQ[ii]	REQ[j]	REQ[j]	REQ[ii]	REQ[ii]	REQ[ii]	REQ[ii]	REQ[ii]	REQ	REQ[j]
Duct Insulation	R-6	R-6	R-6	R-6	R-6	R-4.2	R-4.2	R-4.2	R-6	R-6	R-6	R-6	R-6	R-8	R-8	R-8
WATER-HEATING	System shall meet Section 151 (f) 8 or Section 151 (b) 1															

Climate Zone Dependent Menu of Energy Efficiency Measures

Not flexible

Must be installed, “As Is”

BASIS FOR PERFORMANCE METHOD, “STANDARD BUDGET”

c21

2005 Prescriptive Package Changes

- Duct Insulation (In unconditioned space)
  - R-8 in CZ's 14, 15, 16
  - R-4.2 in CZ's 6, 7, 8
  - R-6 in all other CZ's 1 – 5 & 9 - 13
- DHW Pipe Insulation
  - DHW to Kitchen
- 20% Glazing for all Climate Zones
- 5% west facing fenestration of CFA
  - No credit for reducing glazing below 20%

*

R-8 EXTREME ZONES

R-4.2 Coastal Zones and minimum mandatory value.

R-6 Neutral zones

Mechanical Code minimum will be R-6 on the next iteration

Slide 9

c21 Replace with slide that has been completed.
consol, 5/13/2004

Mandatory Measures: 2005

- Lighting
- Water Heating
  - Equipment Efficiencies (NAECA 2004)
  - Insulation
    - Pipe
    - Blanket
- HVAC
  - Equipment Efficiencies
  - Duct Insulation

These Mandatory Measures significantly changed under the 2005 standards.

One *2005* project had **1998 Compliant lighting** in kitchen (2006 inspection)

DHW not installing correct energy factor/blanket

NAECP 1/2004 - Federal

Mandatory Features List (MF-1R, Page 1 of 2)

MANDATORY MEASURES SUMMARY: RESIDENTIAL (Page 1 of 2) **MF-1R**

Project Title | Date

Note: Low-rise residential buildings subject to the Standards must contain these measures regardless of the compliance approach used. More stringent compliance requirements from the Certificate of Compliance supersede the items marked with an asterisk (*) below. When this checklist is incorporated into the permit documents, the features noted shall be coordinated by all parties as minimum component performance specifications for the mandatory measures whether they are shown elsewhere in the documents or on this checklist only.

Instructions: Check or initial applicable boxes when completed or check NA if not applicable.

DESCRIPTION	NA	Designer ✓	Enforcing Agency ✓
Building Envelope Measures:			
* (150(a) Minimum R-19 in wood frame ceiling insulation or equivalent U-factor in metal frame ceiling.	☐	☐	☐
(150(b) Loose fill insulation manufacturer's labeled R-Value.	☐	☐	☐
* (150(c) Minimum R-13 wall insulation in wood framed walls or equivalent U-factor in metal frame walls (does not apply to exterior mass walls).	☐	☐	☐
* (150(d) Minimum R-19 wood floor insulation in framed floors or equivalent U-factor.	☐	☐	☐
(150(e) Installation of Fireplaces, Decorative Gas Appliances and Gas Logs.			
1. Masonry and factory-built fireplaces have:			
a. closeable metal or glass door covering the entire opening of the fireplace.	☐	☐	☐
b. outside air intake with damper and control. flue damper and control	☐	☐	☐
2. No continuous burning gas pilot lights allowed.	☐	☐	☐
(150(f) Air sealing wrap installed to comply with §151 sheet requirements specified in the ACM Residential Manual.	☐	☐	☐
(150(g) Vapor barrier mandatory in Climate Zones 14 and 16 only.	☐	☐	☐
(150(i) Slab edge insulation - water absorption rate for the insulation material alone without facings no greater than 0.3%, water vapor permeance rate no greater than 2.0 perm/inch.	☐	☐	☐
§118 Insulation specified or installed meets insulation installation quality standards. Indicate type and include CF-6R Form.	☐	☐	☐
§116-17 Fenestration Products, Exterior Doors, and Infiltration/Exfiltration Controls.			
1. Doors and windows between conditioned and unconditioned spaces designed to limit air leakage.	☐	☐	☐
2. Fenestration products (except field-fabricated) have label with certified U-factor, certified Solar Heat Gain Coefficient (SHGC), and infiltration certification.	☐	☐	☐
3. Exterior doors and windows weatherstripped, all joints and penetrations caulked and sealed.	☐	☐	☐
Space Conditioning, Water Heating and Plumbing System Measures:			
§110-§113. HVAC equipment, water heaters, showerheads and faucets certified by the Energy Commission.	☐	☐	☐
(150(b) Heating and/or cooling loads calculated in accordance with ASHRAE, SMACNA or ACCA.	☐	☐	☐
(150(c) Setback thermostat on all applicable heating and/or cooling systems.	☐	☐	☐
(150(j) Water systems pipe and tank insulation and cooling systems line insulation.	☐	☐	☐
1. Storage gas water heaters rated with an Energy Factor less than 0.58 must be externally wrapped with insulation having an installed thermal resistance of R-12 or greater.	☐	☐	☐
2. Back-up tanks for solar systems, unfired storage tanks, or other indirect hot water tanks have R-12 external insulation or R-12 internal insulation and indicated on the exterior of the tank showing per R-value.	☐	☐	☐
3. The following piping is insulated according to Table 150-A/B or Equation 150-A Insulation Thickness:			
1. First 5 feet of hot and cold water pipes closest to water heater tank, non-recirculating systems, and entire length of recirculating sections of hot water pipes shall be insulated to Table 150B.	☐	☐	☐
2. Cooling system piping (suction, chilled water, or brine lines), piping insulated between heating source and primary hot water tank shall be insulated to Table 150-B and Equation 150-A.	☐	☐	☐
4. Steam hydronic heating systems or hot water systems >15 psi, meet requirements of Table 123-A.	☐	☐	☐

Residential Compliance Forms *April 2005*

Complete document in Section 3 of the BECT Manual

Mandatory Features Checklist (MF-1R, Page 2 of 2)

Residential Lighting Measures:			
§150(k)1: HIGH EFFICACY LUMINAIRES OTHER THAN OUTDOOR HID: contain only high efficacy lamps as outlined in Table 150-C, and do not contain a medium screw base socket (E24/E26). Ballast for lamps 13 watts or greater are electronic and have an output frequency no less than 20 kHz.	☐	☐	☐
§150(k)1: HIGH EFFICACY LUMINAIRES - OUTDOOR HID: contain only high efficacy lamps as outlined in Table 150-C, luminaire has factory installed HID ballast	☐	☐	☐
§150(k)2: Permanently installed luminaires in kitchens shall be high efficacy luminaires. Up to 50 percent of the wattage, as determined in § 130 (c), of permanently installed luminaires in kitchens may be in luminaires that are not high efficacy luminaires, provided that these luminaires are controlled by switches separate from those controlling the high efficacy luminaires.	☐	☐	☐
§150(k)3: Permanently installed luminaires in bathrooms, garages, laundry rooms utility rooms shall be high efficacy luminaires. OR are controlled by an occupant sensor(s) certified to comply with Section 119(d) that does not turn on automatically or have an always on option.	☐	☐	☐
§150(k)4: Permanently installed luminaires located other than in kitchens, bathrooms, garages, laundry rooms, and utility rooms shall be high efficacy luminaires (except closets less than 70ft^2): OR are controlled by a dimmer switch OR are controlled by an occupant sensor that complies with Section 119(d) that does not turn on automatically or have an always on option.	☐	☐	☐
§150(k)5: Luminaires that are recessed into insulated ceilings are approved for zero clearance insulation cover (IC) and are certified airtight to ASTM E283 and labeled as air tight (AT) to less than 2.0 CFM at 75 Pascals.	☐	☐	☐
§150(k)6: Luminaires providing outdoor lighting and permanently mounted to a residential building or to other buildings on the same lot shall be high efficacy luminaires (not including lighting around swimming pools/water features or other Article 680 locations) OR are controlled by occupant sensors with integral photo control certified to comply with Section 119(d).	☐	☐	☐
§150(k)7: Lighting for parking lots for 8 or more vehicles shall have lighting that complies with Sec. 130, 132, and 147. Lighting for parking garages for 8 or more vehicles shall have lighting that complies with Sec. 130, 131, and 146.	☐	☐	☐
§150(k)8: Permanently installed lighting in the enclosed, non-dwelling spaces of low-rise residential buildings with four or more dwelling units shall be high efficacy luminaires OR are controlled by occupant sensor(s) certified to comply with Section 119(d).	☐	☐	☐

Residential Compliance Forms *April 2005*

Note: The 2005 Mandatory Lighting Standard does not require a detailed lighting plan.

However, as a practical matter it will be difficult for a builder to buy, contract for installation of and quality control lighting without a detailed lighting plan.

Further, plan-check and jurisdiction inspections will be almost impossible without a plan showing the location of various controls and types of fixtures chosen by the builder.

Minimum documentation **required** by T-24 is MF-1R and WS-5R.

Complete document in Section 3 of the BECT Manual

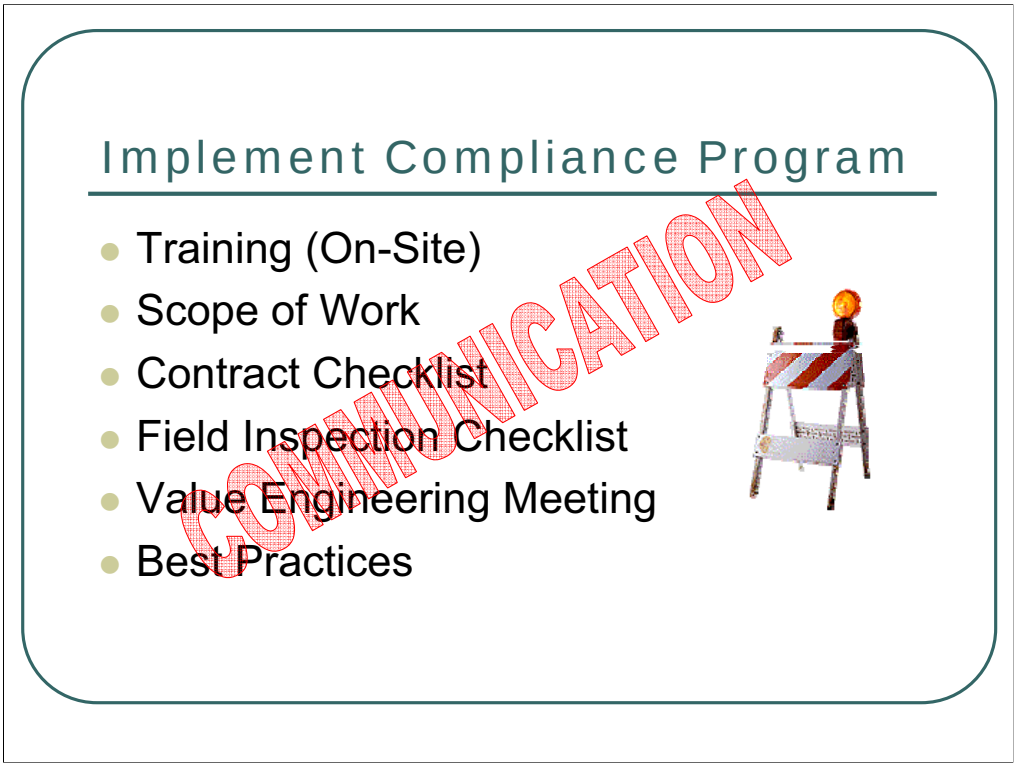

Communication essential to success

Does this mean that you don't need to remember what you learn here if you incorporate a quality construction program?

SCOPES OF WORK – SECTION 4 OF THE 2005 BECT MANUAL

HVAC DESIGN, INSULATION, WINDOWS & CAULKING and SEALING

VALUE ENGINEERING MEETING can go along way to avoid UGLY, EXPENSIVE field fixes.

BEST PRACTICES: good way to do things

Product of joint DOE, Industry, Consultant research

DHW IN Attic to take advantage of insulation

Supply registers wall mounted away from windows

Lower heat transfer through glass

Shorter ducts.

Relative Cost Effectiveness by Climate Zone

- Climate Zones
  - 7
  - 10
  - 12
  - 14

GOOD COMPLIANCE STRATEGIES DEPEND UPON COST-EFFECTIVENESS

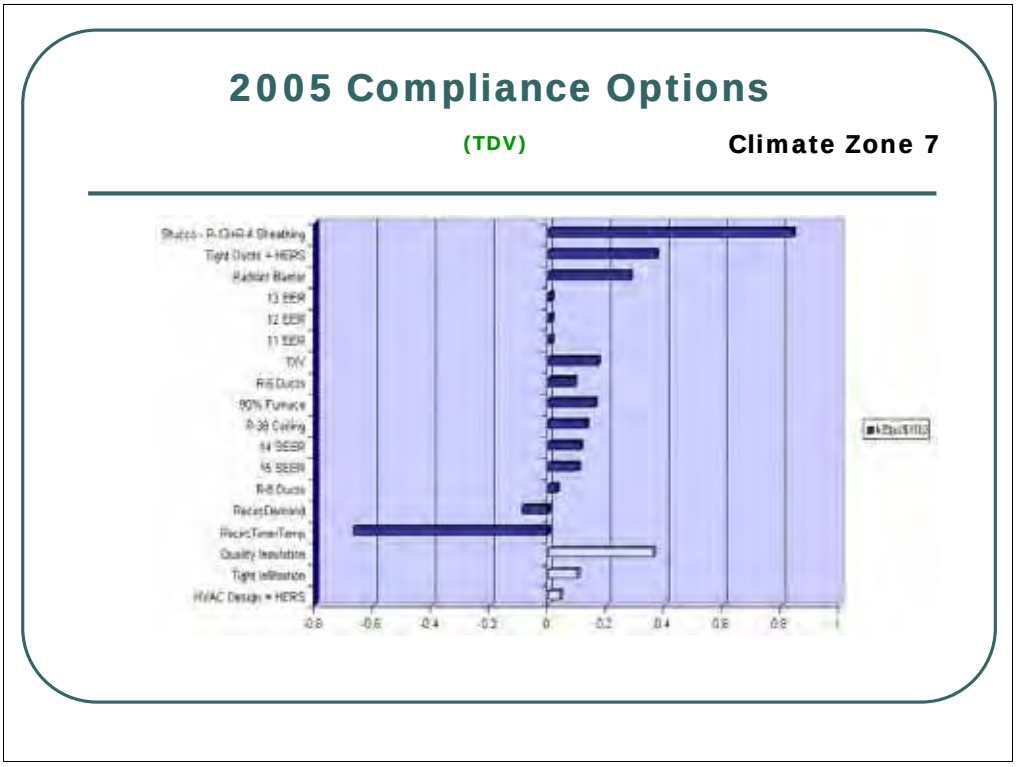

Slides progress from mild to more extreme Climate Zones.

About 8 mm computer runs were conducted to develop these data.

Solid bars to the right of Center represent the relative cost effectiveness in kBtu/$100 cost for the measure.

The longer the bar in either direction the greater the relative cost effectiveness or lack thereof.

The lighter lines at the bottom of the chart indicate measures that may be more appropriate for building above the Code in that Climate Zone.

As we progress through the Climate Zone you will note that the relative cost effectiveness among the measures will vary significantly.

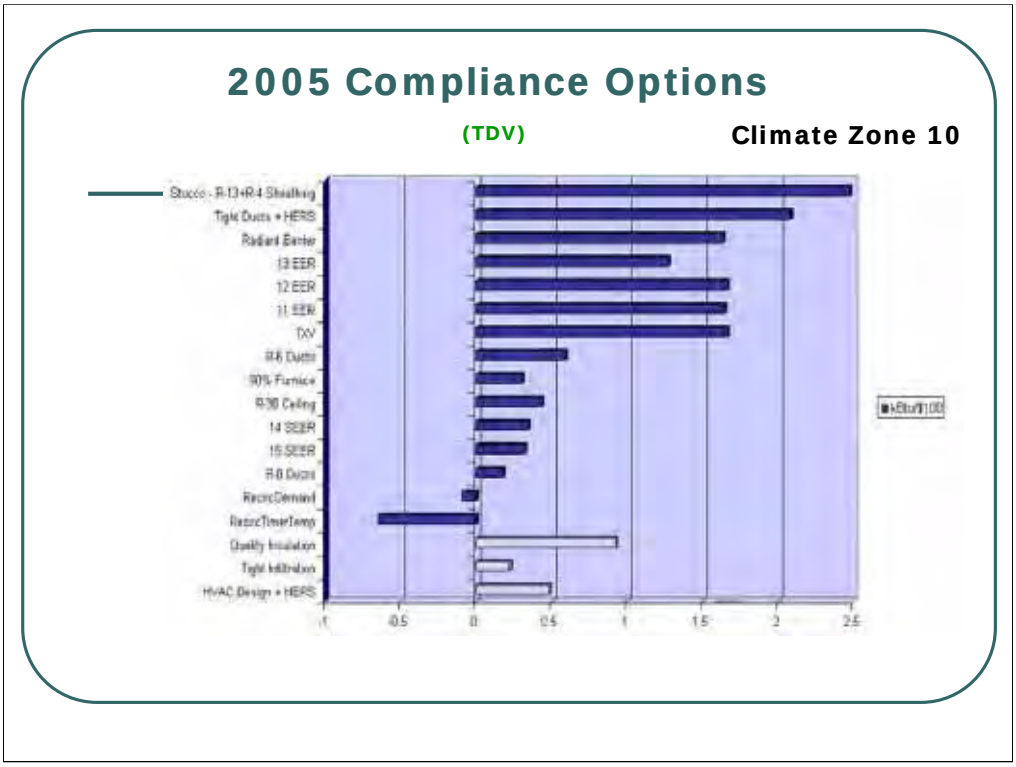

About 8 mm computer runs were conducted to develop these data.

Solid bars to the right of Center represent the relative cost effectiveness in kBtu/$100 cost for the measure.

The longer the bar in either direction the greater the relative cost effectiveness or lack thereof.

The lighter lines at the bottom of the chart indicate measures that may be more appropriate for building above the Code in that Climate Zone.

As we progress through the Climate Zone you will note that the relative cost effectiveness among the measures will vary significantly.

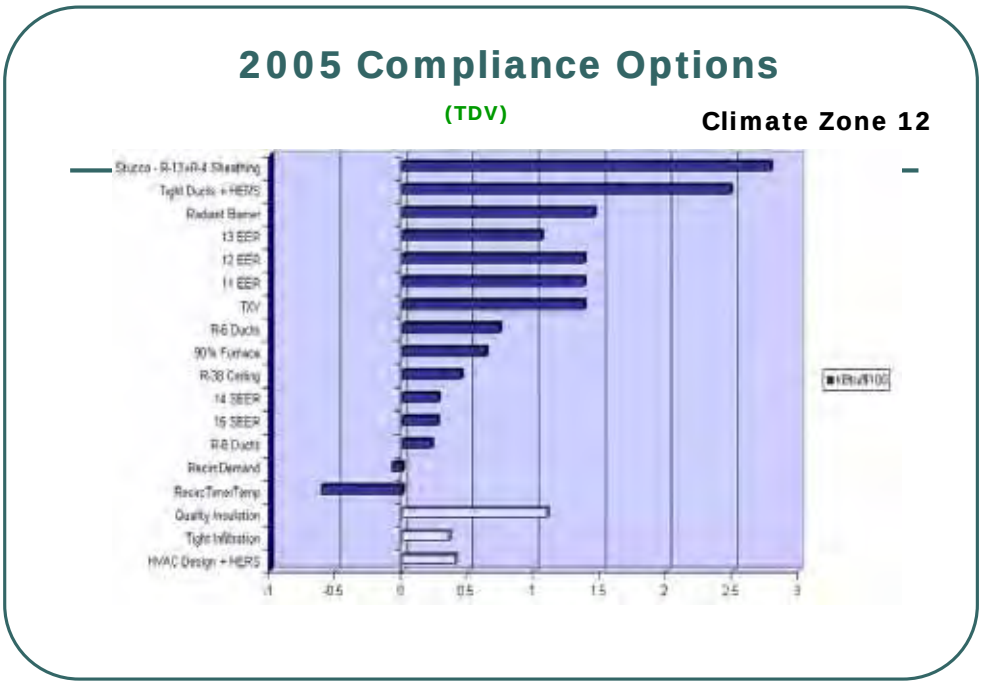

About 8 mm computer runs were conducted to develop these data.

Solid bars to the right of Center represent the relative cost effectiveness in kBtu/$100 cost for the measure.

The longer the bar in either direction the greater the relative cost effectiveness or lack thereof.

The lighter lines at the bottom of the chart indicate measures that may be more appropriate for building above the Code in that Climate Zone.

As we progress through the Climate Zone you will note that the relative cost effectiveness among the measures will vary significantly.

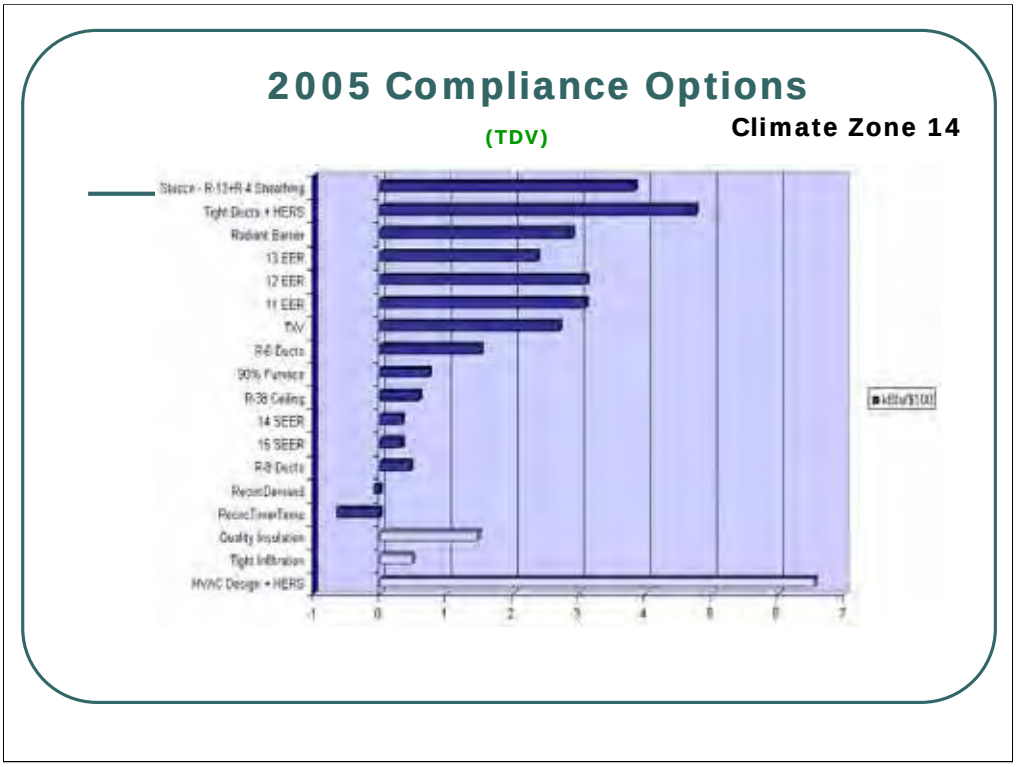

About 8 mm computer runs were conducted to develop these data.

Solid bars to the right of Center represent the relative cost effectiveness in kBtu/$100 cost for the measure.

The longer the bar in either direction the greater the relative cost effectiveness or lack thereof.

The lighter lines at the bottom of the chart indicate measures that may be more appropriate for building above the Code in that Climate Zone.

As we progress through the Climate Zone you will note that the relative cost effectiveness among the measures will vary significantly.

Radiant Barrier

REFLECTS >90% OF HEAT STRIKING ROOF (CEC STUDIES)

REDUCES HEAT LOAD ON CONDITIONED SPACE BELOW ATTIC

REDUCES HEAT LOAD ON DUCT AND OTHER HVAC EQUIPMENT.

CURRENT COST IS ABOUT $200/UNIT FOR A 2000 SQ FT HOUSE

THERE APPEARS TO BE AN AMPLE SUPPLY AVAILABLE IN SLIGHTLY DIFFERENT FORMS FROM SEVERAL MANUFACTURERS

COMMON CONCERNS

MOLD/MOISTURE BUILDUP – TRAPPED BY RADIANT BARRIER

REFLECTED HEAT DAMAGING ROOFING MATERIAL

INTERFERENCE WITH ELECTRONIC EQUIPMENT

NO EVIDENCE SUPPORTING ANY OF THESE CONCERNS.

GABLE ENDS MUST HAVE RADIANT BARRIER

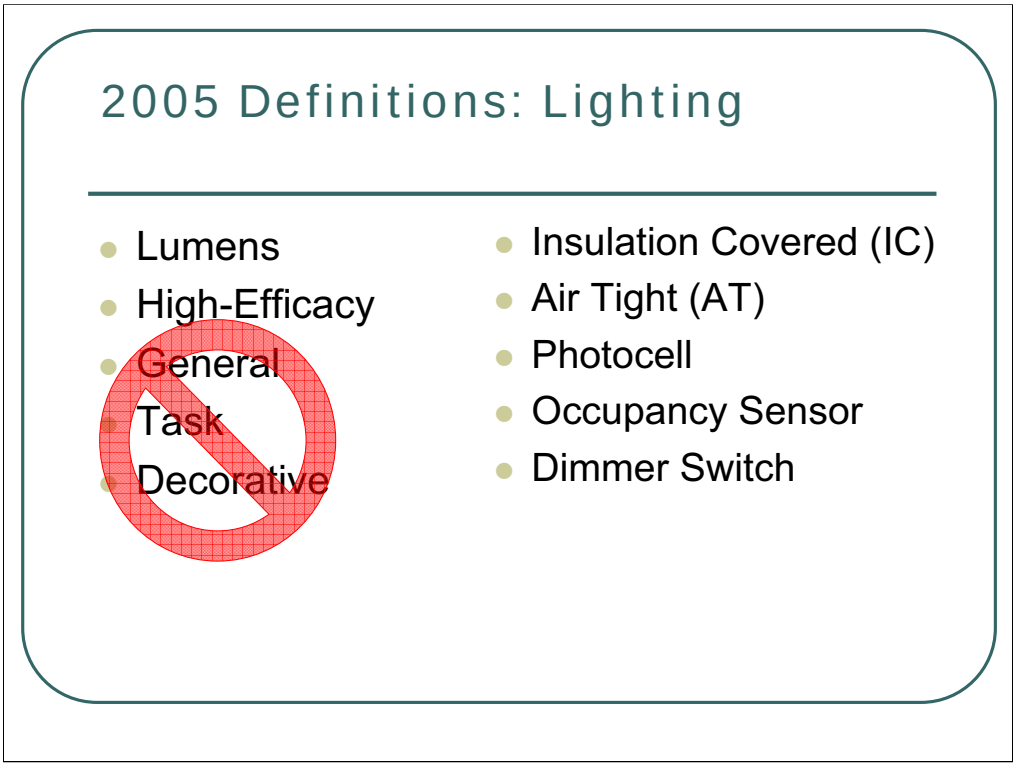

Lumens, the SI unit of luminous flux, equal to the amount of light crossing a unit area at a unit distance from a light source of luminous intensity of one candela.

A standard 100 watt incandescent light bulb emits approximately 1500 lumens.

High Efficacy, 50 lumens/watt, electronically ballasted **15 watts and over**

OR

INCANDESCENTS WITH CONTROLS (Occupancy sensors or dimmers)

2005 Interior Lighting

- 100% High-Efficacy
  - 50 lumens per watt* (no screw in lamps)
- Kitchen
  - 50% **wattage** or greater on separate switch
- Bathroom, Garage, & Support Space
  - Occupancy Sensor
- Other (Hall,bedroom, great room, etc.)
  - Dimmer Switch or Occupancy Sensor
  - Closet <70 sf

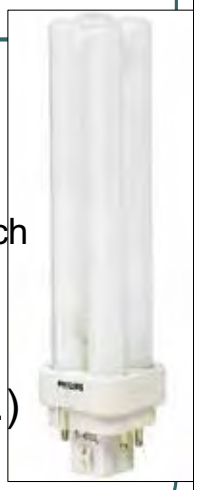

2005 High Efficacy Fixtures

Up to 15W: 40 Lumens per watt

- ≥ 15W ≤ 40 W :50 Lumens per watt
- >40W: 60 Lumens per watt
  - (See Std. Table 150-C)
- ELECTRONIC BALLASTS
- Support Space = Laundry & Utility rooms

2005 Exterior Lighting

- 100% High-Efficacy if attached to house, or
- Residential
  - Motion/Photo Sensor
  - Swimming Pools – Exempt (If CEC S. 680)
- Common Areas (Multi Family)
  - Motion/Photo Sensor
- Parking Lots/ Garages 8+ vehicles
  - Sections 130, 131, 132, 146, 147

2005 Lighting Controls

- Occupancy Sensor
  - Ultrasonic or Microwave
  - 30 Minute max.
  - No Manual Override
- Dimmer Switch
  - Rheostat Prohibited
  - Consume <4% Rated Load
- Motion/Photo Sensor

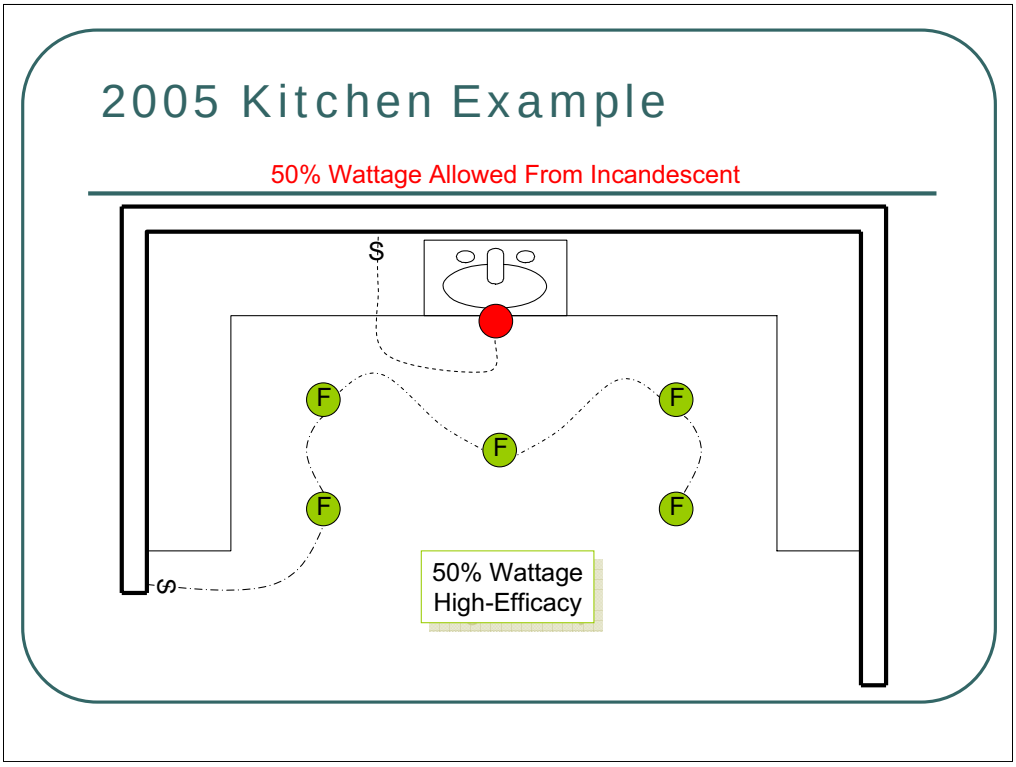

Assumes:

75 Watt incandescent

5 x 18 Watt fluorescent to offset = 90 watts.

If the incandescent is re-lampable to 100 watts listed on can, then the high-efficacy fixtures would have to be 26 watt models to meet the requirement.

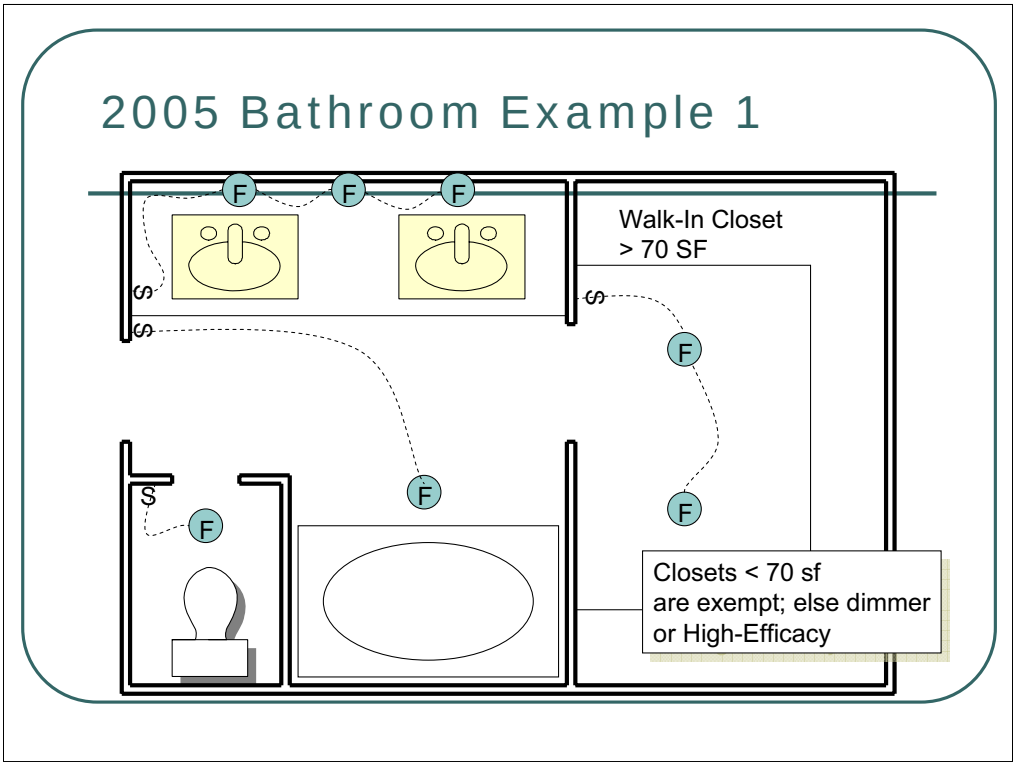

If the closet was less than 70 SF, then builder could install any lamp and any switch.

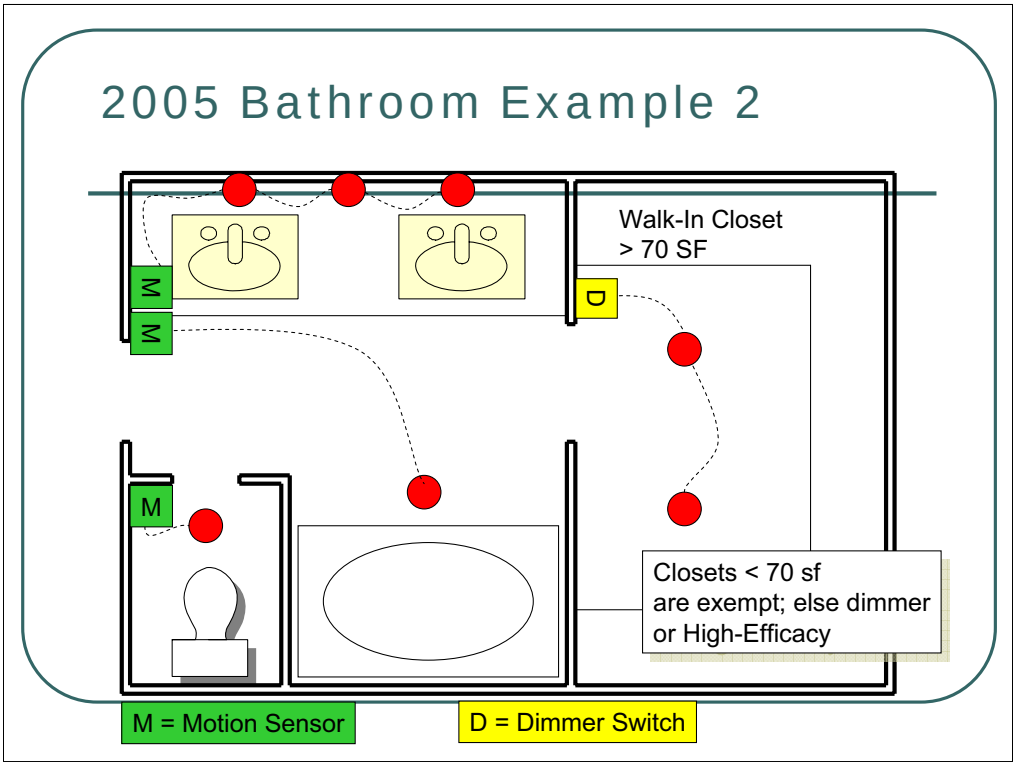

Walk-in closet could also use an Occupancy Sensor (Section 150(k)4.

Lighting: Common Complaints

- Fluorescent Fixtures:
  - Poor Light Output
  - Flicker
  - Noise
  - Poor Color

Characteristic of 13 watt magnetically ballasted lamps. 1/3 of 65 par halogen.

Flicker, noise from magnetic ballasts. Not caused by electronic ballast which also start instantly.

Color Rendition/Rendering Index (CRI) ≥ 80 closely mimics daylight and eliminates the problem.

Lamp

- Lumens (Measured Light Output vs. Flood Lamp)
  - 13w Fluorescent ~ 33%
  - 18w Fluorescent ~ Equivalent
  - 26w Fluorescent ~ 150%
- Color
  - Temperature (CCT)
    - Measured in Kelvin (recommend 2700 – 3200) *
    - Warm (~3000K) or Cool (~5000K)
  - Color Rendering Index (CRI)
    - Scale: 0 to 100
    - Quality > 80*

CCT = 2700-3000K = Warmer White

1500 k Candlelight
2680 k 40 W incandescent lamp
3000 k 200 W incandescent lamp
3200 k Sunrise/sunset
3400 k Tungsten lamp
3400 k 1 hour from dusk/dawn
5000-4500 k Xenon lamp/light arc
5500 k Sunny daylight around noon
5500-5600 k Electronic photo flash
6500-7500 k Overcast sky
9000-12000 k Blue sky

Ballast

- Magnetic
  - 2 Pins
  - Slow Start
  - Noise
- Electronic
  - 4 Pins
  - Rapid (Instant) Start
  - Potentially Dimmable

Section 150(k)5

Recessed cans between conditioned and unconditioned spaces

Label showing approved for zero clearance insulation cover (IC) by UL

Label showing Air Tight according to ASTM E283

(See Residential Manual Chapter 6.10)

BREAK TIME

- ENJOY

3RD PARTY INSPECTIONS WERE INTRODUCED 1998 CODE

HERS RATERS AND RATINGS ARE COVERED IN DETAIL IN THE <u>2005 RESIDENTIAL MANUAL, CHAPTER 4</u>

2001 CODE BECAME MOST COST EFFECTIVE TOOL FOR COMPLIANCE

2005 DUE TO BUILT IN BIAS IN CODE SUCCESSFUL STRATEGIES MUST INCLUDE

IN MOST OF STATE

QUALITY CONSTRUCTION BECOMES A GOOD STRATEGY FOR 2005 COMPLIANCE

M/B VERIFIED BY 3RD PARTY INSPECTORS

3RD PARTY INSPECTORS

TRAINED and CERTIFIED BY CHEERS, CALCERTS, or CBPCA

GENERALLY INDEPENDENT CONTRACTORS

CAN BE PROVIDED WITH TURNKEY SERVICES

DIAGNOSTIC TESTING IS PART OF 3RD PARTY INSPECTOR SERVICES

ENVELOPE INTEGRITY

2005 HERS RNC Inspections
(2005 Residential Manual, Chapter 4)

- Lowered Duct Leakage
- Lowered Air Infiltration
- TXV/RCA
- ACCA D
- High EER
- Replacement HVAC =
  - Duct sealing requirement
- Insulation Quality
  - Buried Ducts
- Right Sizing
- HVAC Airflow
- Lowered Watt Blower
- Ducts in Conditioned Space
- Reduced Duct Surface Area

INSPECTOR TO MATCH CF-1R CF-6R & CF-4R FOR SPECIFIED MEASURES.

Alterations will be discussed later in the presentation

Lowered Duct Leakage 6% of less of rated fan flow

4.9 SLA or less

Thermostatic Expansion Valve/Refrigerant Charge and Air Flow (Alternative)

Designed duct system (ACCA Manual J,S,D)

Component efficiency (Coil & condenser)

Insulation Quality (Voids, compression, depth & density)

Buried ducts (On trusses & buried with ceiling insulation)

Right sizing (not more than 115% of design capacity)

Room x room & total within 10% of design values

Measured by Rater (high efficiency fan motors qualify)

Reduced Duct Surface Area (Going through ACCA D twice to show the reduction of duct surface area)

HERS Duct testing and/or duct sealing may be required for some HVAC repairs and/or change outs.

There are alternatives to duct sealing (3 options) Residential Manual Table 8-3.

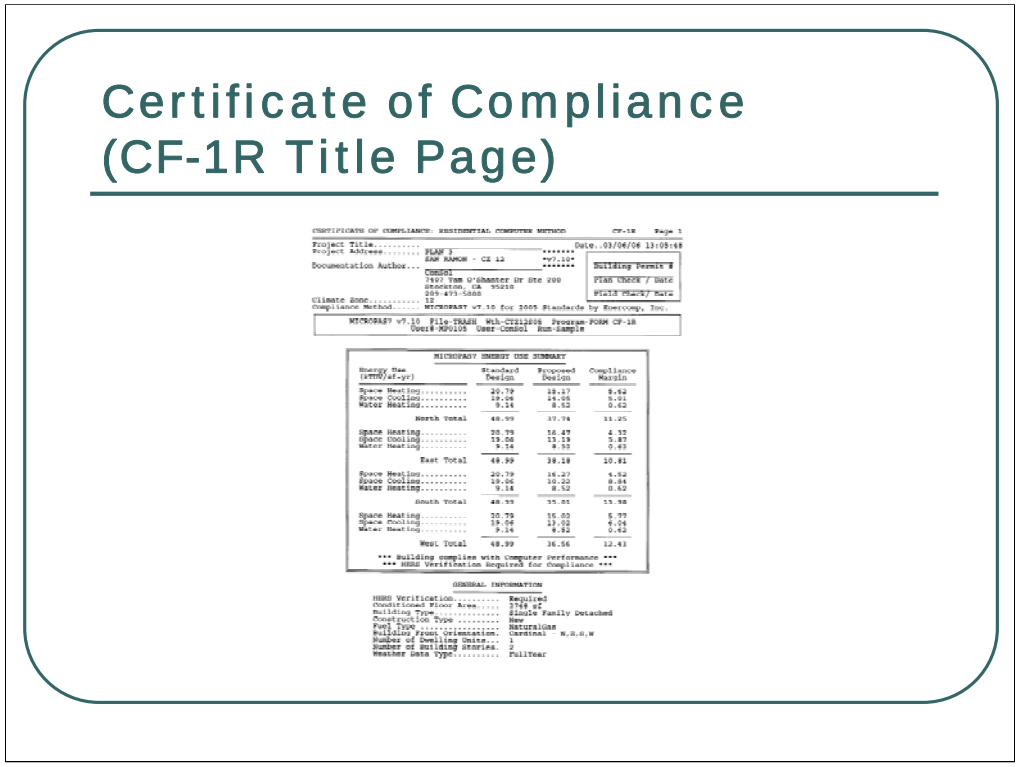

COMPLETE FORM IN SECTION 3 OF THE BECT MANUAL

MicroPas Generated Form

This form includes all the information previously contained on the C2-R which has been eliminated.

ConSol is working with some production builders and Building Departments to incorporate CF-1R into plan-set and eliminating separate *Compliance Book*.

Certificate of Compliance (CF-1R HERS Page)

CERTIFICATE OF COMPLIANCE: RESIDENTIAL COMPUTER METHOD CF-1R Page 8
Project Title..... Date..03/06/06 13:08:48

DUCT SYSTEMS

System Type	Duct Location	Duct R-Value	Verified Duct Leakage	Verified Surface Area	Verified Buried Ducts
Furnace	Attic	R-13	Yes	Yes	Yes
ACSplit	Attic	R-13	Yes	Yes	Yes

SUPPLY DUCT SYSTEM DETAILS

Description	Duct Location	Duct Length (ft)	Duct Dia (in.)	Duct R-Val	Buried Duct	Attic R-Val	Attic Insulation Type
1 Main	Attic	200	4.0	R-4.2	Yes	R-30	Fiberglass

INFILTRATION TESTING DETAILS

Blower Door Leakage Target (CFM50h/SLA)	Blower Door Leakage Minimum (CFM50h/SLA)
2518 / 3.5	1079 / 1.5

WATER HEATING SYSTEMS

Tank Type	Heater Type	Distribution Type	Number in System	Energy Factor	Tank Size (gal)	External Insulation R-value
1 Storage	Gas	Parallelpiping	1	0.62	50	R- n/a

SPECIAL FEATURES AND MODELING ASSUMPTIONS

*** Items in this section should be documented on the plans. ***
*** installed to manufacturer and CFC specifications, and ***
*** verified during plan check and field inspection. ***

This building incorporates HERS verified insulation installation.

This building incorporates HERS verified Infiltration.
The HOMEOWNER'S Manual must include instructions on how to operate the windows and/or mechanical ventilation to achieve adequate ventilation.

This building incorporates a HERS verified Refrigerant Charge test or a HERS verified Thermostatic Expansion Valve (TXV). If a cooling system is not installed, then HERS verification is not necessary.

This building incorporates HERS verified SEER.

This building incorporates HERS verified Fan Power.

This building incorporates HERS verified Adequate Air Flow and HERS verified duct design and layout.

This building incorporates HERS verified Maximum Cooling Capacity.

COMPLETE FORM IN SECTION 3 OF THE BECT MANUAL

Installation Certificate (CF-6R, Page 1 of 13)

INSTALLATION CERTIFICATE (Page 1 of 13) CF-6R

Site Address Permit Number

An installation certificate is required to be posted at the building site or made available for all appropriate inspections. (The information provided on this form is required; however, use of this form to provide the information is optional.) After completion of final inspection, a copy must be provided to the building department (upon request) and the building owner at occupancy, per Section 10-103(b).

HVAC SYSTEMS:

Heating Equipment

Basic Type (pkg. [illegible])	CEC Certified MB Name and Model Number	# of Identical Systems	Efficiency (AFUE, etc.) (CF-1R value)	Duct Location (attic, etc.)	Duct or Piping R-value	Heating Load (Btu/hr)	Heating Capacity (Btu/hr)

Cooling Equipment

Basic Type (pkg. [illegible])	CEC Certified Compressor Unit MB Name and Model Number	# of Identical Systems	Efficiency (HERS, etc.) (CF-1R value)	Duct Location (attic, etc.)	Duct R-value	Cooling Load (Btu/hr)	Cooling Capacity (Btu/hr)

1. 2 reads *greater than or equal to.*
I, the undersigned, verify that equipment listed above is: 1) is the actual equipment installed, 2) equivalent to or more efficient than that specified in the certificate of compliance (Form CF-1R) submitted for compliance with the *Energy Efficiency Standards* for residential buildings, and 3) equipment that meets or exceeds the appropriate requirements for manufactured devices (from the *Appliance Efficiency Regulations* or Part 6), where applicable.

Signature, Date

Installing Subcontractor (Co. Name)
OR General Contractor (Co. Name) OR Owner

WATER HEATING SYSTEMS:

Heater Type	CEC Certified MB Name & Model Number	Distribution Type (Dist. Point of Use)	If Recirculation, Control Type	# of Identical Systems	Rated Input (kW or Btu/hr)	Tank Volume (gallons)	Efficiency* (EF, RE)	Standby* Loss (%)	External Insulation R-value

2. For **small gas storage** (rated input of less than or equal to 75,000 Btu/hr), **electric resistance and heat pump water heaters**, list Energy Factor. For **large gas storage water heaters** (rated input of greater than 75,000 Btu/hr), list Recovery Efficiency, Standby Loss and Rated Input. For **instantaneous gas water heaters**, list Recovery Efficiency and Rated Input.
3. R-12 external insulation is mandatory for storage water heaters with an energy factor of less than 0.58.

Faucets & Shower Heads:
All faucets and showerheads installed are certified to the Commission, pursuant to Title 24, Part 6, Section 111.

I, the undersigned, verify that equipment listed above my signature is: 1) the actual equipment installed, 2) equivalent to or more efficient than that specified in the certificate of compliance (Form CF-1R) submitted for compliance with the *Energy Efficiency Standards* for residential buildings; and 3) equipment that meets or exceeds the appropriate requirements for manufactured devices (from the *Appliance Efficiency Regulations* or Part 6), where applicable.

Signature, Date

Installing Subcontractor (Co. Name) OR
General Contractor (Co. Name) OR Owner

COPY TO: Building Department
HERS Provider (if applicable)
Building Owner at Occupancy

Compliance Forms August 2001 A-23

COMPLETE FORM IN SECTION 3 OF THE BECT MANUAL

The installer submits CF-6R to Builder, Building Dept., HERS Provider & Homebuyer about work done.

This work is the basis for the HERS Rating of the particular compliance measure and of the Building Department's inspection of the Quality Construction Measures.

Sub-contractor tests/inspects 100% of its work. HERS Rater tests/inspects 1:7 houses to spot check information on CF-6R.

COMPLETE ONLY PAGES THAT ARE REQUIRED. All 13 pages of the CF-6R must be submittted.

Certificate of Field Testing, Etc. (CF-4R, Page 1 of 7)

CERTIFICATE OF FIELD VERIFICATION AND DIAGNOSTIC TESTING (Page 1 of 7) CF-4R

HERS RATER COMPLIANCE STATEMENT

MINIMUM REQUIREMENTS FOR DUCT LEAKAGE REDUCTION COMPLIANCE CREDIT

THERMOSTATIC EXPANSION VALVE (TXV)

MINIMUM REQUIREMENTS FOR DUCT DESIGN COMPLIANCE CREDIT

COMPLETE FORM IN SECTION 3 OF THE BECT MANUAL.

CF-4R is required on every house where HERS rating is required.

Building Department must not final until CF-4R is completed.

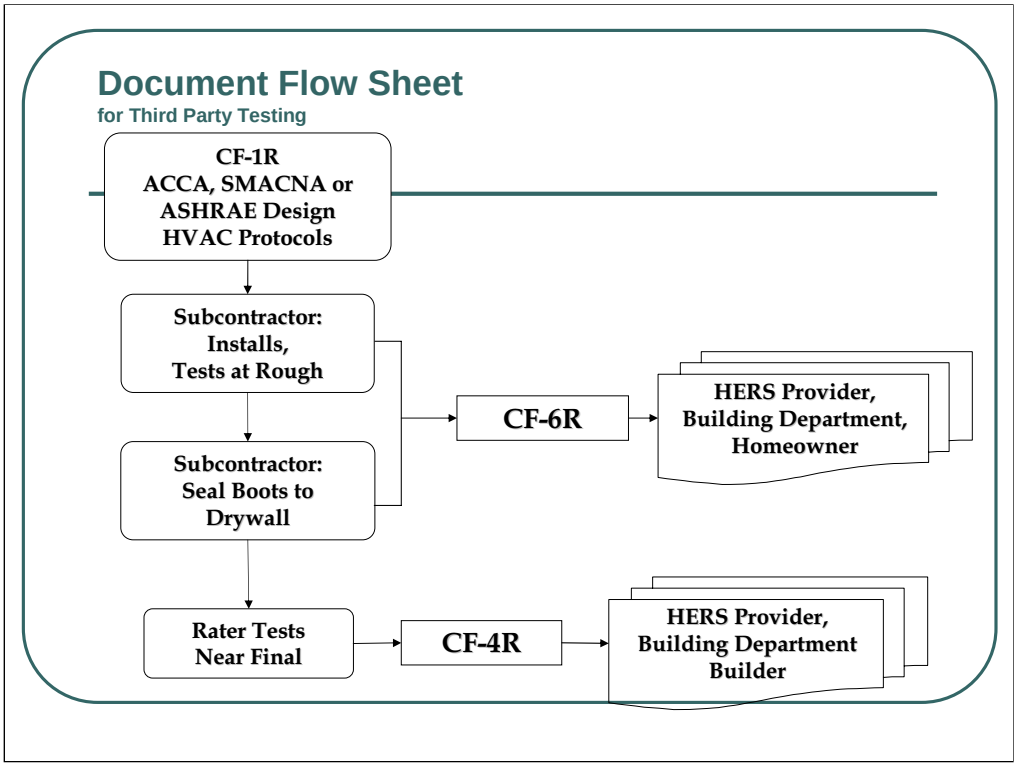

•MANY SUBS ARE NOT PROVIDING CF-6R FORMS even though required by Code.

- •MANY JURISDICTIONS ARE NOT REQUIRING ALTHOUGH THEY HAVE BEEN REQUIRED BY THE CODE FOR YEARS
- **•ONE CONTRACTOR RECENTLY LOST A CONSTRUCTION DEFECTS SUIT BECAUSE THEY HAD NO CF6R'S**

•The CF-6R is Required for all homes regardless of features installed.

- •All homes require a CF-6R copy for the Building Department and the Homeowner.
- •<u>Page 1 & 2 must be filled out for all homes</u> – additional pages depend upon the features used – e.g. Pg 3 duct leakage is required only of credit is taken.

•If you test < 4% leakage at rough, then you must test better than 6% duct leakage because the rough inspection doesn't consider the duct leakage between the boot and the drywall.

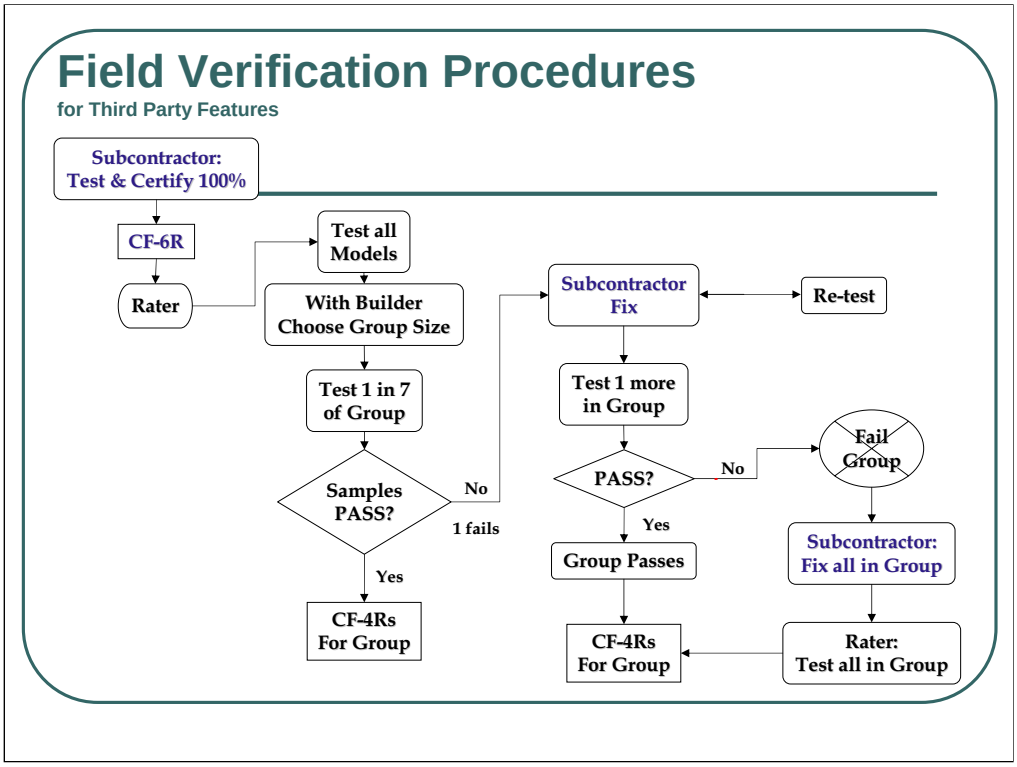

•The maximum group size is the number of homes that can be tested in 180 days.

•It is recommended that you keep the group sizes smaller than the number of homes than can be tested in the 180 day period.

•We recommend keeping group sizes small – Testing of each release/phase is recommended to avoid having to test occupied houses, and to avoid delays on the certification of occupancy.

•HERS INSPECTIONS

- •Easy to implement
- •Industry concerns (Time/Failures/Costs)

•IF SUBS ARE REALLY DOING THEIR JOBS RIGHT THIS SHOULD CAUSE FEW PROBLEMS.

Return Air Leakage

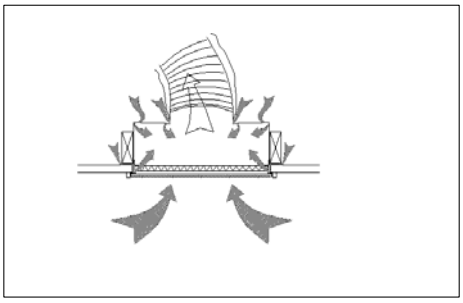

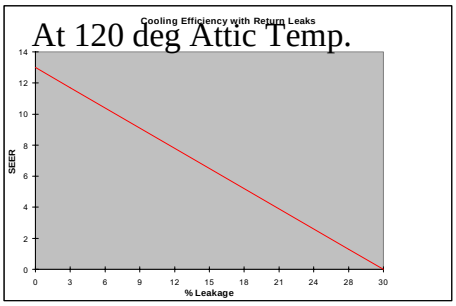

Field Fabricated Return

•30% total system leakage is typical **DEGRADES EFFECTIVE SEER RATING TO ABOUT 7.8 (-40%)**

•Leaks on the Return side reduces the effectiveness of the Air Conditioner.

- •Contaminated air depositing dust on coil compromising effectiveness and useful life
- •Hot attic air is mixing with cooler return air.

•Reference: ACCA SMACNA or ASHRAE Manual.

Required by prescriptive package in all Climate Zones.

Can be used in performance modeling, but will be quite cost-effective in most Climate Zones.

HVAC system is pressurized to 25 Pascals (heat cycle pressure)

CFM to maintain pressure = leakage

% leakage = measured leakage ÷ rated fan flow

4 ton system

1600 cfm rated fan flow

96 cfm passes

97 cfm fails

This example of poor quality air sealing is a great example of the **LACK OF COMMUNICATION**.

It can be resolved by addressing this problem through on-site training, in the Scope of Work and Contract & Inspection Checklists.

In order to be effective, caulking must be continuous and complete without voids.

THIS IS A BIG AIR LEAK!

Blower Door Test for Infiltration

- Measured in SLA
- 4.9 = Default
- If CF1R < 3.0 Then Mechanical Ventilation
- If test < 1.5 Then Supply
- Nearly impossible to test this low.
- (CCR, Title 24, Part 6, Chapter 3.5.1, et. Seq.)

BLOWER DOOR ASSEMBLY

USED TO TEST INFILTRATION

TARP WITH RING

CALIBRATED FAN

DIGITAL MANOMETER

House is pressurized to 50 Pascals (cooling cycle pressure)

Cfm to maintain stable pressure = leakage.

Compared to Cfm & SLA targets on CF-1R

≤ Target passes > target fails

IF SLA **SPECIFIED ON CF-1R** IS <3.0 THEN BUILDER MUST INSTALL MECHANICAL VENTILATION.

IF SLA **MEASURED** BY BLOWER DOOR TEST <1.5 THEN BUILDER MUST INSTALL POSITIVE, CONTINUOUS, MECHANICAL, SUPPLY VENTILATIONOR OTHERWISE INCREASE INFILTRATION. (STRESS THAT INFILTRATION <1.5 IS VERY RARE!

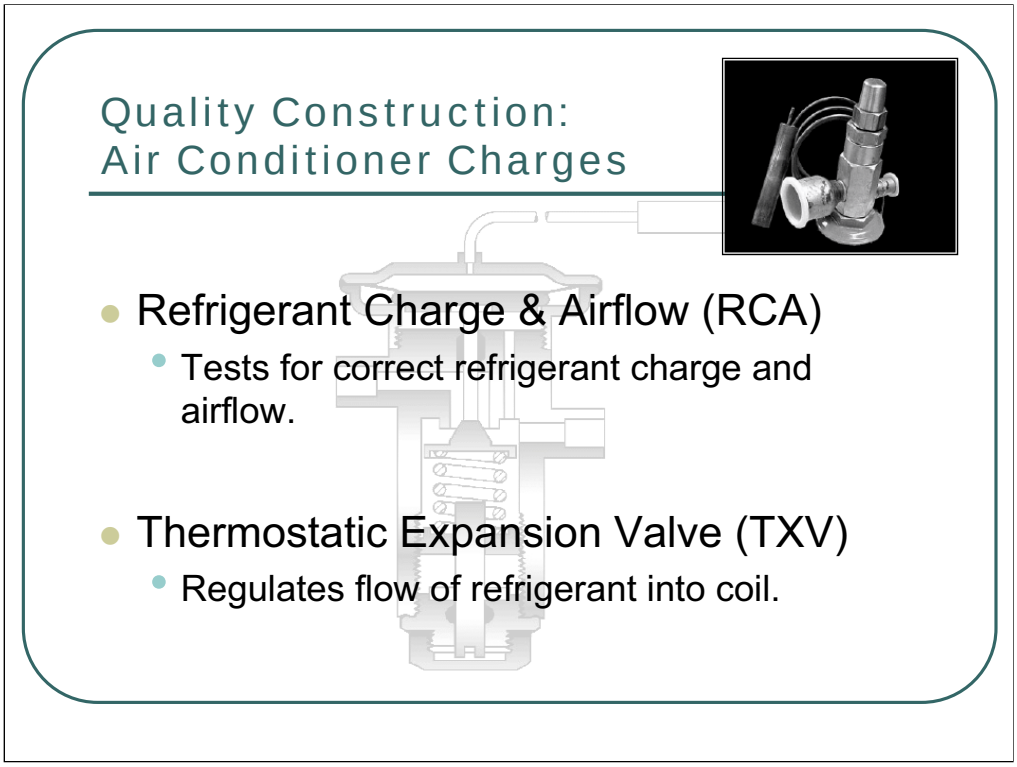

Refrigerant Charge & Airflow (RCA):

THIS IS A BEST PRACTICE EXAMPLE

•The installing sub-contractor should be testing 100% of installed systems regardless of the credits associated with this test.

•Use Scope of Work, Inspection Checklist & CF-6R form,

Nominal SEER ratings is degraded in performance evaluation unless one of the above tests is performed and verified by a HERS Rater.

Thermostatic Expansion Valve (TXV):

•The TXV improves the performance of the coil under conditions with improper charge and/or improper air flow. Over 60% of installations have improper charge and/or insufficient airflow across the coil.

•TXV: regulates liquid refrigerant into evaporation ("A") coil; installed at factory or in field in indoor coil;

INSPECTOR CHECKS CF-1R FOR HERS MEASURES. THEN CHECKS CF-4R FOR VERIFICATION BEFORE FINAL INSPECTION IS COMPLETED.

Quality Construction: ACCA HVAC Design

- ACCA Manual J, SMACNA or ASHRAE - Load Calculations
  - Room by room loads → room air requirements
  - Worst case orientation → worst case total load
- ACCA Manual S - Equipment Sizing
  - Use correct design conditions for capacities
  - Size Furnace for adequate airflow to AC

•ACCA = Air Conditioning Contractors of America

•Manual J & S should reference the actual installed features of a house.

e.g. Low SHGC Glass can lower house load by as much as a ton compared to clear glass.

Dryer Vent Calculation?

Sensible load addresses heat removal

Latent load addresses moisture removal – Typically 30%, too high for California must be accounted for in sizing calculations

INSPECTOR CHECKS CF-1R FOR HERS MEASURES. THEN VERIFIES THAT BUILDER RECEIVED CF-4R EACH MEASURE FOR VERIFICATION BEFORE FINAL INSPECTION IS COMPLETED.

QUESTIONS?

Quality Construction: ACCA HVAC Design

- ACCA Manual D - Duct Sizing
  - Takes into account ALL friction losses
  - Takes into account available pressure from fan
  - Sizes ducts according to room load
  - Balances supply and return
- Register Selection
  - Function and aesthetics
  - Throw distance and noise

Manual D Credit is available through Air Flow Credit

•Requires 3rd Party Inspection

•Requires Manual J, S, D

- •J = Room x room & whole house load
- •S = Equipment sizing including latent & sensible load
  - •Sensible capacities are lower for higher SEER units **BE CAREFUL WHEN CHOOSING UNITS.**
- •D = Duct sizing & register placement for room x room load including all relevant conditions and air flow

•Requires Tested Tight Ducts

•INSPECTOR CHECKS CF-1R FOR HERS MEASURES. THEN CHECKS CF-4R FOR VERIFICATION BEFORE FINAL INSPECTION IS COMPLETED.

Glazing Definitions

- Fenestration
- Glazing %
- Overhang
- U-Factor
- Solar Heat Gain Coefficient
- VLT

Fenestration, "any transparent or translucent material plus any sash, frame, mullion, and divider in the envelope …

Glazing %, the amount of fenestration area expressed as a percentage of square feet of finished floor area allowed by T-24 - **20% ALL C/Z's**.

Pres. Pkg assumes 20% or less

Performance assumes 20% or less, **if less no credit, if more penalty.**

VLT, Visible Light Transmission factor, the measure of the amount of visible light that is transmitted through glass

Overhang, a structure that extends above a window or door and provides shade from sunlight. No consequence in coastal zones.

Solar Heat Gain Coefficient, (SHGC) – the ratio of solar heat gain entering the space through the fenestration area to the amount of solar heat striking the fenestration.

Low SHGC = Low Heat Gain

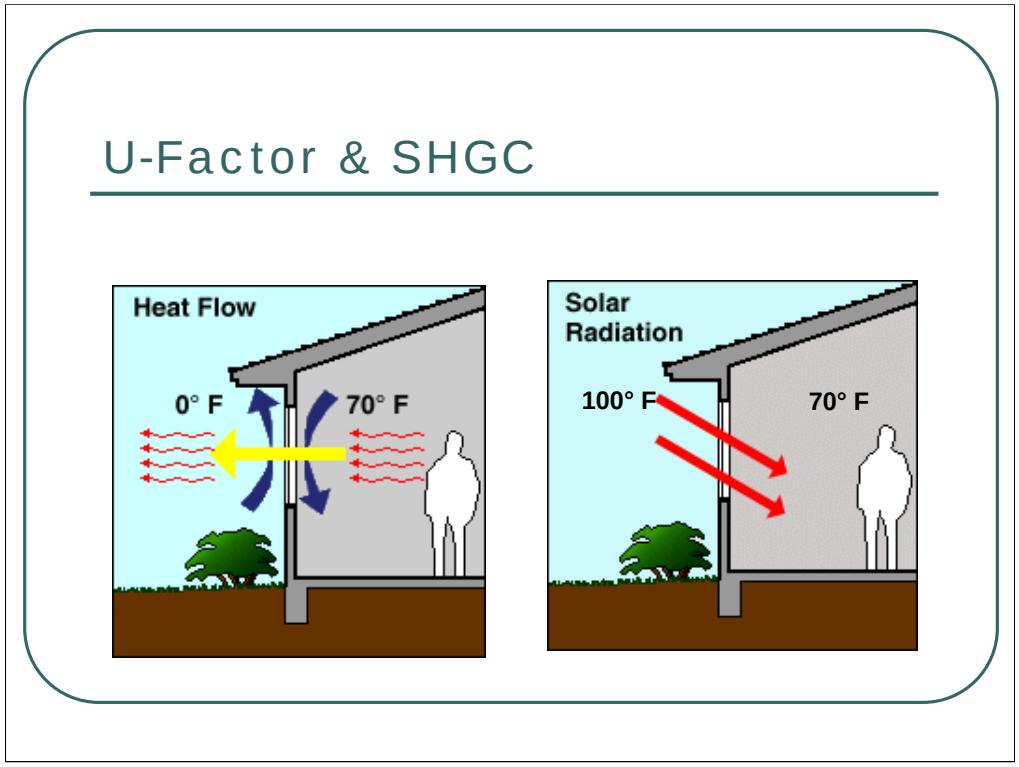

Heat Flow:

Via Conduction:

Heat transfer is a function of the difference in temperatures flowing in the direction of the cooler side. The larger the difference in temperature, the faster the heat is transferred.

Via Radiation:

Heat transfer occurs through the passage of electromagnetic waves (primarily infra-red)

Via Convection:

Heat transfer occurs through movement of fluids (primarily air).

Clear glass transmits about 80% - Spectrally selective (includes SCHGC & U-Factor) transmits about 32-33% heat.

Good choice throughout most of State, except Sierra where it depends upon orientation.

Temporary Label

- Remove After Inspected
  - (Required by E.E. Stds. Section 116.)
- Air Infiltration
- U-Factor
- SHGC
- VLT

Temporary Labels are required until the building inspector/ HERS inspector has had the opportunity to verify that the windows are equal to or more efficient that the Compliance Documents indicate.

There are 4 significant values

1) **U-Factor** ≤ CF-1R specification – OK (Relates to conduction)
2) **SHGC** ≤ CF-1R specification – OK (Relates to radiation)
3) **Visible Light Transmittance** (VLT) NOT T-24 ISSUE = WINDOW MFG MARKETING
4) **Air Infiltration Certification** (Relates to convection)

5) **QUESTIONS?**

Temporary Label

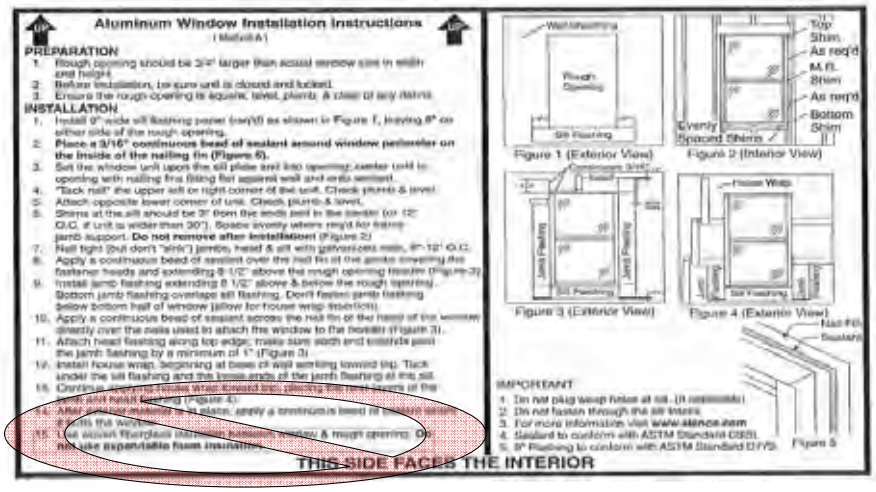

EXPANSIVE FOAM

RACKS WINDOWS

BREAKS SEALS (Moisture intrusion)

VOIDS MANUFACTURERS' WARRANTIES

Permanent Label

- Never Remove
- Coded Info Identifies:

Fenestration: Infiltration

- Caulk to Reduce Air & Water Intrusion
- Don't use Expansive Foam
- CAWM Scope of Work

On the following few slides we will demonstrate the CAWM scope of work **(IN SECTION 3 OF YOUR MANUAL)** that illustrates the proper method of sealing the window.

Even the low expansive foams will continue to expand.

This will VOID the window manufacturer warranty for all vinyl frame types.

Some expansive foam manufacturers claim that low expansive foam is OK. Field experience is contra.

Some inspectors may still try to insist on this approach.

QUESTIONS?

Plan Check

- **MF-1R** – Inadequate for 2005 Lighting
  - Detailed Lighting Plan
- **CF-1R** – Compliance Design Details:
  - Window Values
  - HERS Required Ratings
  - Checklists for Inspectors
- **C-2R & FORM 3R** - Eliminated

The MR-1R defines only the choices available to builders for lighting, not the choices they actually make.

ConSol makes CF-1R available to builders and jurisdictions as ***T-24 SHEET*** in plan set. This sheet would replace the Compliance Book currently used by many builders and jurisdictions. This suggestion was well received at the CALBO ABM in Palm Springs.

Inspections

- **Checklist of HERS from Plan Check**
- **Folder from Builder:**
  - CF-1R
    - Specifies HERS features
  - CF-6R
    - Installed HERS features
  - CF-4R
    - HERS features tested & passed.

Many jurisdictions are planning to provide inspectors with a **HERS CHECKLIST** prepared by their Plans Examiners when plans are submitted.

Builders should provide a folder with all relevant CF-1R's, CF-6R's and CF-4R's when inspector arrives at house.

BREAK TIME

- ENJOY

Water Heater Blanket

- Water Heater Blanket
  - If Energy Factor (EF) is less than 0.58
  - If 'Large' Water Heater & Credit Taken
    - Large Water Heater = Input > 75,000 Btu
  - Labels Visible
  - Easily Identified on CF-1R

This has more impact on the larger water heaters. Due to the latest NAECA adoption, there are fewer large water heaters and more 75 gallon + that are rated with an Energy factor.

Most commonly available product is 50 Gallon, EF 0.62

Hot Water Distribution

- Location
  - Conditioned / Semi / Unconditioned / Under-Slab
- Material
  - Copper / PEX / CPVC
- Type
  - Trunk & Branch / Homerun / Recirc Loop / Other

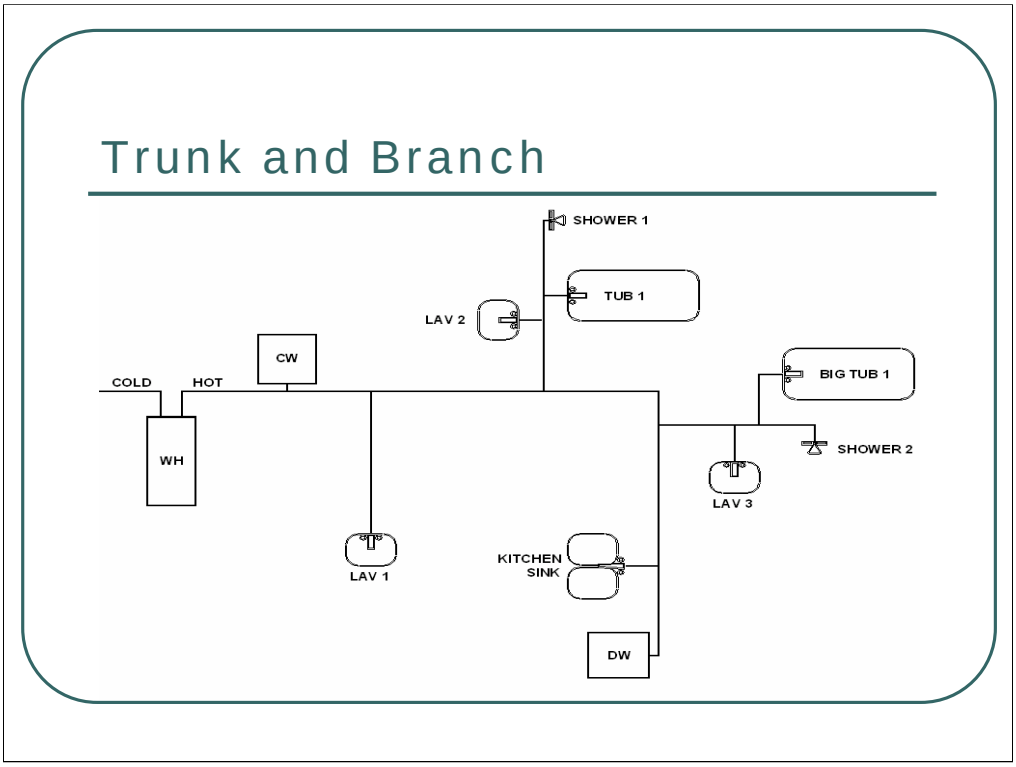

DRAW BACKS:

LONG HOT WATER **DELIVERY TIMES** TO DISTANT FIXTURES

HOMEOWNER DISSATISFACTION

WASTES WATER & ENERGY (ENERGY LOSS CAN BE MITIGATED WITH PIPE INSULATION)

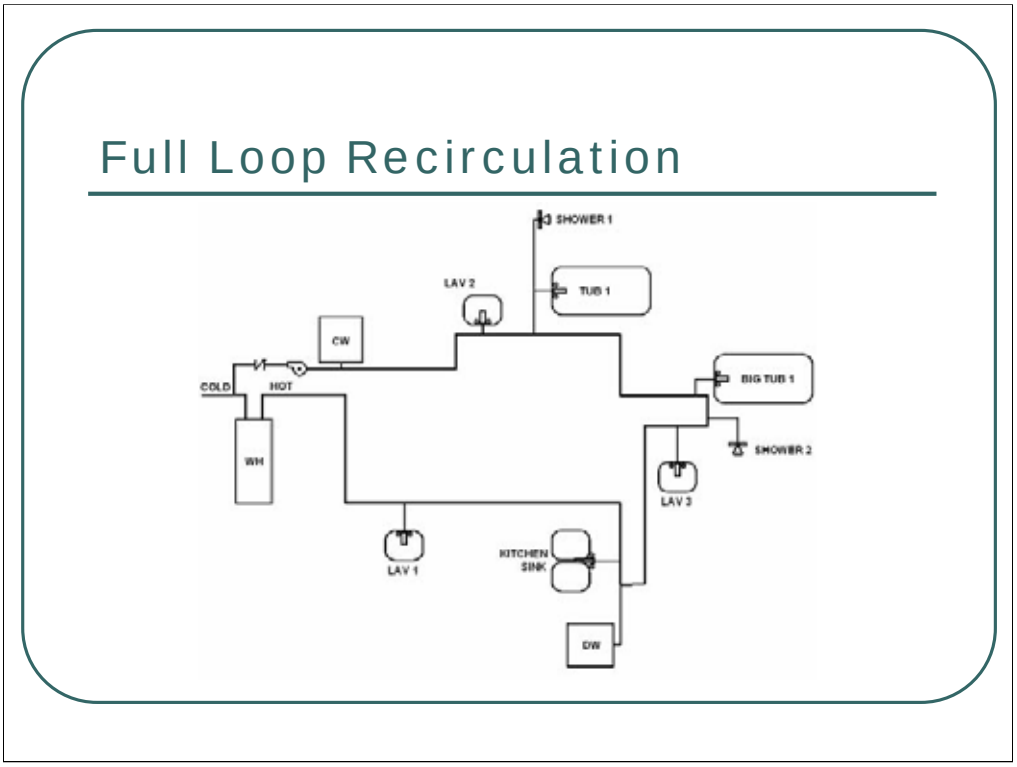

PUMPS CAN BE LOCATED IN SEVERAL PLACES

BENEFITS:

FAST HOT WATER DELIVERY TO DISTANT FIXTURES

SAVES WATER (less cold water wasted before hot water arrives)

T-24 NOW CALCULATES WASTES ENERGY EVEN WITH WITH CONTROLS

Time/Temperature – hybrid control that activates pump on either time of day or temperature in recirc. Loop. (modest penalty)

Demand – activates pump when homeowner wants hot water (lowest penalty)

DRAW BACKS:

REQUIRES INSULATION ON ENTIRE RECIRC LOOP

USES MORE ENERGY EVEN WITH CONTROLS

Still useful as a water saving measure in Green Homes, Energy Penalty can be offset with other measures.

HOMEOWNERS MAY NOT WANT TO USE CONTROLS, OR UNDERSTAND HOW TO USE, CONTROLS NEEDED TO MAKE SYSTEM ENERGY EFFICIENT.

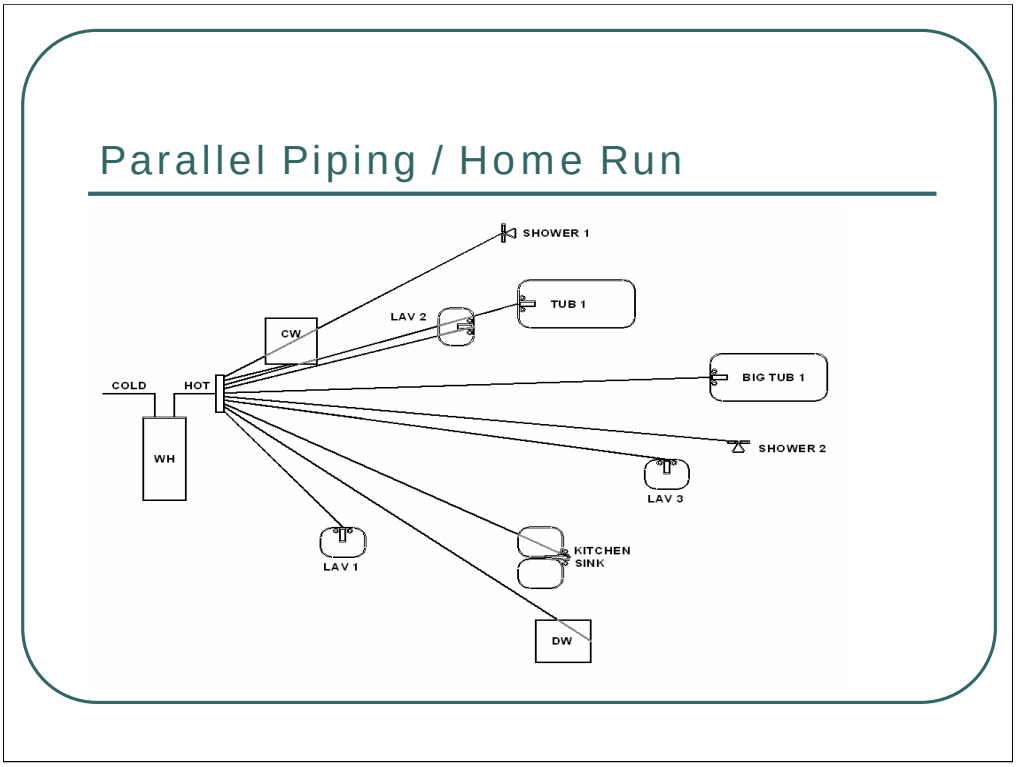

2004 APPEALS DECISION

Must be installed correctly LBNL study found over a mile of 3/8” line in a 2500 SF house.

SAVES WATER & POSSIBLY ENERGY

HAS **SHORTER** HOT WATER **RUN OUT TIME** if installed correctly. Long runs from manifold to faucets must be avoided.

CREDIT UNDER 2001 NO CREDIT UNDER 2005

LESS LABOR THEREFORE **FASTER & CHEAPER** TO INSTALL

IN CHEMICALLY ACTIVE SOILS LONGER LIFE THAN COPPER

FEWER CONNECTIONS TO LEAK

Combined with a tankless water heater in centrally located in attic, can produce good water saving results.

SMOOTH SWEEPS W/O CUTTING & FITTING RT ANGLES ARE QUICK & EASY

CAN BE BURIED UNDER ATTIC INSULATION TO IMPROVE THERMAL PERFORMANCE

(**ONE BUILDER HAS REPORTED COLDER WATER DELIVERED TO FAUCETS)**

BETTER HOMEOWNER SATISFACTION

REMEMBER, 2OO1 CREDIT LOST FOR 2005 – ORNL/DAVIS SPLIT OF OPINION

STILL A $$$ SAVER UNDER 2005 CODE

DHW Pipe Insulation

- Pipe Insulation Required If:
  - 1st Five Feet (hot and cold)
  - Recirculation Systems
  - Pipe Insulation Credit

FOR TRUNK & BRANCH SYSTEMS

R-4.2 PIPE INSULATION CREDIT ENTIRE MAIN greater than or equal to 3/4 “

<u>2005 KITCHEN SUPPLY INSULATION IS DEFAULT (NO CREDIT FOR THIS INSULATION)</u>

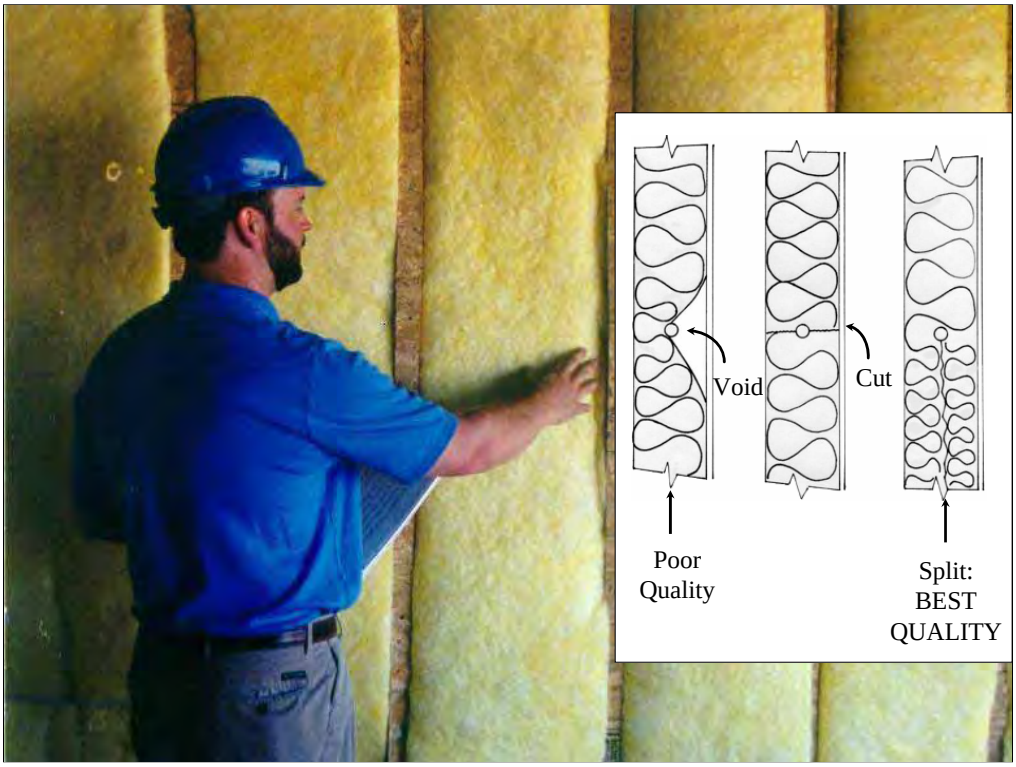

Add the final example

•If Quality Insulation Credit (HERS required) IS NOT TAKEN, then calculations seriously degrade value of insulation in calculation heat gain/loss.

•T-24 Quality Construction for insulation requires that 90% of the insulated area be free of compression, voids and other defects.

- •(See Scope of Work in Section 3 for details).

•Blown-in attic insulation must be to proper depth and density throughout the attic.

•Compression decreases R-Value of the installed batt.

•This is the most common error made in insulation, happening in 70% of the house.

•Use BII Scope of Work in Subcontractor agreement – Do not allow poor quality installations.

•Cut batts 1” larger than bay width and height.

•This is a direct conduit for heat flow in and out of the house.

QUESTIONS?

Knee Wall Insulation

Two quality issues with Kraft faced knee wall.

Face of insulation too far from face of stud for contact with drywall. Air chamber reduces effectiveness of insulation.

“ Kraft paper must contact drywall to avoid fire hazard.

Exterior Metal Framing

- 2 x 4 " – 24" O.C.
- 4" Extruded Poly
- ± R-15

GOOD EXAMPLE OF ALTERNATIVE FRAMING TECHNIQUE.

Form 3R for alternative framing calculations eliminated by T-24, 2005.

Replaced by Alternative Framing Table

Proposed framing in Table? No further certification required.

Proposed framing not in table? Framing plan must be certified by CEC Staff before plan can be approved.

Table is very broad

Straw bale walls

Metal with extruded poly, etc.

2005 Alterations

- **<u>Title 24, Section 152, et. seq.</u> applies to:**
- **(C) New space-conditioning systems or components other than new or replacement space conditioning ducts shall:**
- **i. Meet the requirements of Sections 150 (h), 150 (i), 150 (j) 2, 151 (f) 7; and 151 (f) 9; and**
- **ii. Be limited to natural gas, liquefied petroleum gas, or the existing fuel type unless it can be demonstrated that the TDV energy use of the new system is more efficient than the existing system.**

2005 Alterations

- (D) New or replacement space-conditioning ducts in unconditioned space
- (E) Installation or replacement of space-conditioning equipment
- For more information check out the following:
  - Blueprint #78.
  - (www.energy.ca.gov/title24/changeout/index.html)
  - BECT Training Manual, Section 5.
  - and the Energy Efficiency Hotline at 1-800-772-3300, or title24@energy.state.ca.us

NEXT FEW SLIDES WILL COVER THESE TOPIC IN DETAIL

ALSO INCLUDED FROM 2005 RESIDENTIAL COMPLIANCE MANUAL, CHAPTER 8

SAMPLING (1:7)

ALTERNATIVE TO DUCT SEALING

2005 Alterations

New or replacement duct insulation:

Less than/equal to 40’

R-4.2 (All Climate Zones)

Greater than 40’:

- R-4.2 (Climate Zones 6,7, and 8)
- R-6 (Climate Zones 1-5 and 9-13)
- R-8 (Climate Zones 14,15, and 16)

MANDATORY MEASURES – ALL CLIMATE ZONES

ALTERNATIVES???????? ESPECIALLY CZ 2 and 9 -16

Performance modeling

2005 Change-outs: HVAC

- Climate Zones 2, and 9-16 require duct sealing with a change-out including the replacement of any of the following:
  - Air handler, or
  - Outdoor condensing unit of a split system air conditioner or heat pump, or
  - Cooling or heating coil, or
  - The furnace heat exchanger, or
  - Adding/replacing more than 40’ of duct
  - 40’ or less for addition requires no duct testing

DUCT SEALING STANDARDS ARE ON THE NEXT SLIDE.

2005 Change-outs: HVAC

- Duct system must meet one of the following:
  - If entirely new duct system, duct leakage < 6% of fan flow
  - 1. Duct leakage < 15% of fan flow
  - 2. Duct leakage to outside of building < 10% of fan flow
  - 3. Duct leakage reduced by > 60% of existing and visual inspection + smoke for existing leaks and seal them
  - 4. If not possible to meet any of first 3 requirements, then all visual inspection + smoke accessible leaks are sealed by HVAC Contractor & verified by a HERS rater
  - **Exceptions:**
  - Duct Systems documented to have been previously sealed HVAC Contractor and verified by a HERS rater
  - Duct system with < 40 linear feet in unconditioned space
  - Existing duct systems constructed, insulated or sealed with asbestos
    - **NO TESTING REQUIRED.**

PRESCRIPTIVE IN CZ 2+9-16

- HERS at Final
- Hers at Final – Requires Rater to test both infiltration & duct leakage and determine what %age of conditioned air leaks from the building itself.
- HERS before and after
- Option of last resort

HERS Rater Sampling

- If the duct system complies with one of the first 3 requirements, the homeowner can choose either to have their ducts tested or to be part of a sample (1 of 7).
- If the duct system is unable to comply with one of the first 3 requirements, and must use the fourth requirement, sampling is not an option.
- Installer needs to fill out the CF-1R & CF-6R.
- HERS Rater needs to fill out the CF-4R.
- INSPECTOR must review CF-6R & 4R to pass.

Sampling requires a maximum sampling ratio of 1:7. A sample can be as low as 1:1, 2, 3, etc. up to 7.

Alternatives to duct sealing

Table 8-3 – Alternatives to Duct Sealing and Refrigerant Charge Measurement

	Option 1	Option 2	Option 3
Climate Zone	0.92 AFUE	SEER-14 & EER-12, with either TXV or refrigerant charge measurement, plus Increased Duct Insulation	SEER-14 & EER-12 with either TXV or refrigerant charge measurement, plus either 0.92 AFUE or 0.82 AFUE with Increased Duct Insulation
CZ2	Yes	No	Yes
CZ9	No	No	Yes
CZ10	No	Yes	Yes
CZ11	No	No	Yes
CZ12	Yes	No	Yes
CZ13	No	Yes	Yes
CZ14	No	No	Yes
CZ15	No	Yes	Yes
CZ16	Yes	No	Yes

1. Increased duct insulation refers to an additional R-4 insulation wrap on existing ducts and R-8 duct insulation for all new ducts.2. Package systems may use Option 2 or 3 without meeting the requirement for a TXV (or refrigerant charge measurement)
Note - There are no duct sealing requirements in climate zones 1 and 3-8.

Refrigerant Charge Measurement is being eliminated from the Title of this Chart.

“NO,” in the Table means that the Option is not available as an alternative Duct Sealing.

Option 1: CZ’s 2 & 12 can use a 9.0 HSPF heat pump, and CZ 16 can use a 10.0 HSPF heat pump instead of the .92 AFUE. If they change-out the A/C in addition to the furnace, then it needs to have a min. 13 SEER.

Option 3: CZ’s 2, 9-15 can use 9.0 HSPF or 8.5 HSPF with increased duct insulation, and CZ 16 can use 10.0 HSPF or 9.0 HSPF with increased duct insulation instead of AFUE requirement.

STATE OF CALIFORNIA — THE RESOURCES AGENCY ARNOLD SCHWARZENEGGER, Governor

CALIFORNIA ENERGY COMMISSION
1516 Ninth Street
Sacramento, California 95814
Main website: www.energy.ca.gov

LETTER TO HOMEOWNERS:

NEW DUCT SEALING REQUIREMENTS - YOU WILL BENEFIT

Beginning October 1, 2005, you must have your home's ducts tested for leaks when you have a central air conditioner or furnace installed or replaced. Ducts that leak 15 percent or more must be repaired to reduce the leaks. After your contractor tests and fixes the ducts, you choose whether to have an approved third-party field verifier check to make sure the duct testing and sealing was done properly or to have your house included in a random sample where one in seven duct systems are checked.

Duct sealing is not required in the following situations: 1) when homes are in specific coastal climates; 2) when systems have less than 40 feet of ductwork in unconditioned spaces like attics, garages, crawlspaces, basements or outside the building, or 3) when ducts are constructed, insulated or sealed with asbestos. There also are specific alternatives that allow high efficiency equipment and added duct insulation to be installed instead of fixing duct leaks.

You also should know that any contractor failing to obtain a required building permit and failing to test and repair your ducts is violating the law and exposing you to additional costs and liability. Real estate law requires you to disclose to potential buyers and appraisers whether or not you obtained required permits for work done on your house. If you do not obtain a permit, you may be required to bring your home into compliance with code requirements for that work and you may have to pay penalty permit fees and fines prior to selling your home.

The greatest energy use in California homes is for central air conditioning and heating. Most homes with central air conditioning and heating systems have ducts that were never properly sealed. **The average home's ducts leak around 30 percent of the conditioned air outside the home. These leaks are taking money straight out of your pocketbook.** Properly sealed ducts will lower your energy bills, reduce pollution inside your home, and help to avoid a repeat of the inconvenience and health and safety risks that we suffered during the power blackouts in 2000.

For more information, please contact the Energy Commission Efficiency Hotline at (800) 772-3300, or visit our website at www.energy.ca.gov/title24/changeout.

Date: August 2, 2005

JACKALYNE PFANNENSTIEL
Vice Chair

ARTHUR H. ROSENFELD, Ph. D.
Commissioner

See also Reference Section of BECT Manual

Building Above Code

- ComfortWise™
- CEEP
- California Green Builder®
- Zero Energy Homes

- www.thebii.org/lgp.asp

QUESTIONS?

Available Training

- Residential & Non-Residential Training
- CABEC
  - Calif. Assoc. of Building Energy Consultants
  - 2006 Certified Energy Plans Examiner
  - Northern and Southern Locations
  - admin@cabec.org
  - www.cabec.org
- CHEERS
- CalCERTS
- CBPCA
- CALIFORNIA ENERGY COMMISSION
  - www.energyvideos.com

SEE SUPPLEMENT

Resources

- **ConSol's Strategic Account Managers (SAM's)**
  - **CA Energy Commission**
    - www.energy.ca.gov
    - www.energyvideos.com
    - 1 (800) 772-3300
    - 1 (916) 654-5106
  - **The BII**
    - www.thebii.org
  - **ConSol**
    - www.consol.ws
  - **CABEC**
    - www.cabec.org
  - **CBPCA**
    - www.cbpca.com
  - **CalCERTS**
    - www.CalCERTS.com
  - **CHEERS**
    - www.cheers.org
  - **ACCA**
    - www.acca.org
  - **NFRC**
    - www.nfrc.org
  - **GAMA**
    - www.gamanet.org

CONSOL RSM's ARE GOOD SOURCES FOR GENERAL INFORMATION AND REFERENCE TO SPECIFIC SOURCES

CEC **VIDEOS + Manuals + Appliance Database + So much more.**

The BII – **CEEP, GREEN RESOURCES**

ConSol – All material covered today

CalCerts – **HERS INSPECTIONS**

CHEERS – **HERS INSPECTIONS**

ACCA – **HVAC DESIGN QUESTIONS**

NFRC – **FENESTRATION QUESTIONS**

GAMA – **DHW & OTHER APPLIANCE QUESTIONS**

MANDATORY MEASURES SUMMARY: RESIDENTIAL (Page 1 of 2) MF-1R

Project Title	Date
Designer Signature:	

Low-rise residential buildings subject to the Standards must contain these measures regardless of the compliance approach used. More stringent compliance requirements from the Certificate of Compliance supersede the items marked with an asterisk (*) below. When this checklist is incorporated into the permit documents, the features noted shall be considered by all parties as minimum component performance specifications for the mandatory measures whether they are shown elsewhere in the documents or on this checklist only.

Instructions: Check or initial applicable boxes or check NA if not applicable and included with the permit application documentation.

DESCRIPTION	NA	Designer	Enforce-ment
Building Envelope Envelope Measures:	✓	✓	✓
§150(a): Minimum R-19 in wood frame ceiling insulation or equivalent U-factor in metal frame ceiling.	☐	☐	☐
§150(b): Loose fill insulation manufacturer's labeled R-Value:_____.	☐	☐	☐
§150(c): Minimum R-13 wall insulation in wood framed walls or equivalent U-factor in metal frame walls (does not apply to exterior mass walls).	☐	☐	☐
§150(d): Minimum R-13 raised floor insulation in framed floors or equivalent U-factor.	☐	☐	☐
§150(e): Installation of Fireplaces, Decorative Gas Appliances and Gas Logs.			
1. Masonry and factory-built fireplaces have:			
a. closeable metal or glass door covering the entire opening of the firebox	☐	☐	☐
b. outside air intake with damper and control, flue damper and control	☐	☐	☐
2. No continuous burning gas pilot lights allowed.	☐	☐	☐
§150(f): Air retarding wrap installed to comply with Section 151 meets requirements specified in the ACM Residential Manual.	☐	☐	☐
§150(g): Vapor barriers mandatory in Climate Zones 14 and 16 only.	☐	☐	☐
§150(l): Slab edge insulation - water absorption rate for the insulation material alone without facings no greater than 0.3%, water vapor permeance rate no greater than 2.0 perm/inch.	☐	☐	☐
§118: Insulation specified or installed meets insulation installation quality standards. Indicate type and include CF-6R Form: _____.	☐	☐	☐
§116-17: Fenestration Products, Exterior Doors, and Infiltration/Exfiltration Controls.			
1. Doors and windows between conditioned and unconditioned spaces designed to limit air leakage.	☐	☐	☐
2. Fenestration products (except field-fabricated) have label with certified U-factor, certified Solar Heat Gain Coefficient (SHGC), and infiltration certification.	☐	☐	☐
3. Exterior doors and windows weather-stripped; all joints and penetrations caulked and sealed.	☐	☐	☐
Space Conditioning, Water Heating and Plumbing System Measures:			
§110-13: HVAC equipment, water heaters, showerheads and faucets certified by the Energy Commission.	☐	☐	☐
§150(h): Heating and/or cooling loads calculated in accordance with ASHRAE, SMACNA or ACCA.	☐	☐	☐
§150(i): Setback thermostat on all applicable heating and/or cooling systems.	☐	☐	☐
§150(j): Water system pipe and tank insulation and cooling systems line insulation.			
1. Storage gas water heaters rated with an Energy Factor less than 0.58 must be externally wrapped with insulation having an installed thermal resistance of R-12 or greater.	☐	☐	☐
2. Back-up tanks for solar system, unfired storage tanks, or other indirect hot water tanks have R-12 external insulation or R-16 internal insulation and indicated on the exterior of the tank showing the R-value.	☐	☐	☐
3. The following piping is insulated according to Table 150-A/B or Equation 150-A Insulation Thickness:			
1 First 5 feet of hot and cold water pipes closest to water heater tank, non-recirculating systems, and entire length of recirculating sections of hot water pipes shall be insulated to Table 150B.	☐	☐	☐
2 Cooling system piping (sucting, chilled water, or brine lines), piping insulated between heating source and indirect hot water tank shall be insulated to Table 150-B and Equation 150-A.	☐	☐	☐
4. Steam hydronic heating systems or hot water systems >15psi, meet requiremetns of Table 123-A.	☐	☐	☐
5. Insulation must be protected from damage, including that due to sunlight, moisture, equipment maintenance, and wind.	☐	☐	☐
6. Insulation for chilled water piping and refrigerant suction piping includes a vapor retardant or is enclosed entirely in conditioned space.	☐	☐	☐
7. Solar water-heating systems/collectors are certified by the Solar Rating and Certification Corporation.	☐	☐	☐

Project Title	Date

Space Conditioning, Water Heating and Plumbing System Measures: (continued)	NA	Designer	Enforce-ment
§150(m): Ducts and Fans	☐	☐	☐
1. All ducts and plenums installed, sealed and insulated to meet the requirements of the CMC Sections 601,602, 603, 604, 605 and Standard 6-5; supply-air ducts and plenums are insulated to a minimum installed level of R-4.2 or enclosed entirely in conditioned space. Openings shall be sealed with mastic, tape or other duct-closure system that meets the applicable requirements of UL 723. If mastic or tape is used to seal openings greater than 1/4 inch, the combination of mastic and either mesh or tape shall be used.	☐	☐	☐
2. Building cavities, support platforms for air handlers, and plenums defined or constructed with materials other than sealed sheet metal, duct board or flexible duct shall not be used for conveying conditioned air. Building cavities and support platforms may contain ducts. Ducts installed in cavities and support platforms shall not be compressed to cause reductions in the cross-sectional area of the ducts.	☐	☐	☐
3. Joints and seams of duct systems and their components shall not be sealed with cloth back rubber adhesive duct tapes unless such tape is used in combination with mastic and draw bands.	☐	☐	☐
4. Exhaust fan systems have back draft or automatic dampers.	☐	☐	☐
5. Gravity ventilating systems serving conditioned space have either automatic or readily accessible, manually operated dampers.	☐	☐	☐
6. Protection of Insulation. Insulation shall be protected from damage, including that due to sunlight, moisture, equipment maintenance, and wind. Cellular foam insulation shall be protected as above or painted with a coating that is water retardant and provides shielding from solar radiation that can cause degradation of the	☐	☐	☐
7. Flexible ducts cannot have porous inner cores.	☐	☐	☐
§114: Pool and Spa Heating Systems and Equipment.	☐	☐	☐
1. A thermal efficiency that complies with the Appliance Efficiency Regulations, on-off switch mounted outside of the heater, weatherproof operating instructions, no electric resistance heating and no pilot light.	☐	☐	☐
2. System is installed with:			
a. at least 36" of pipe between filter and heater for future solar heating	☐	☐	☐
b. cover for outdoor pools or outdoor spas	☐	☐	☐
3. Pool system has directional inlets and a circulation pump time switch.	☐	☐	☐
§115: Gas fired fan-type central furnaces, pool heaters, spa heaters or household cooking appliances have no continuously burning pilot light. (Exception: Non-electrical cooking appliances with pilot < 150 Btu/hr)	☐	☐	☐
§118: Cool Roof material meets specified criteria	☐	☐	☐
Residential Lighting Measures:			
§150(k)1: HIGH EFFICACY LUMINAIRES OTHER THAN OUTDOOR HID: contain only high efficacy lamps as outlined in Table-150-C, and do not contain a medium screw base socket (E24/E26). Ballast for lamps 13 watts or greater and electronic and have an output frequency no less than 20kHz.	☐	☐	☐
§150(k)1: HIGH EFFICACY LUMINAIRES - OUTDOOR HID: contain only high efficacy lamps as outlined in Table-150-C, luminaire has factory installed HID ballast.	☐	☐	☐
§150(k)2: Permanently installed luminaires in kitchens shall be high efficacy luminaires. Up to 50 percent of the wattage, as determined in Section 130(c), of permanently installed luminaires in kitchens may be in luminaires that are not high efficacy luminaires, provided that these luminaires are controlled by switches separate from those controlling the high efficacy luminaires.	☐	☐	☐
§150(k)3: Permanently installed luminaires in bathrooms, garages, laundry rooms and utility rooms shall be high efficacy luminaires. OR are controlled by an occupant sensor(s) certified to comply with Section 119(d) that does not turn on automatically or have an always on option.	☐	☐	☐
§150(k)4: Permanently installed luminaires located other than in kitchens, bathrooms, garages, laundry rooms, and utility rooms shall be high efficacy luminaires (except closets less than 70 square feet): OR are controlled by a dimmer switch OR are controlled by an occupant sensor that complies with Section 119(d) that does not turn on automatically or have an always on option.	☐	☐	☐
§150(k)5: Luminaires that are recessed into insulated ceilings are approved for zero clearance insulation cover (IC) and are certified airtight to ASTM E283 and labeled as air tight (AT) to less than 2.0 CFM at 75 Pascals.	☐	☐	☐
§150(k)6: Luminaires providing outdoor lighting and permanently mounted to a residential building or to other buildings on the same lot shall be high efficacy luminaires (not including lighting around swimming pools/water features or other Article 680 locations) OR are controlled by occupant sensors with integral photo control certified to comply with Section 119(d).	☐	☐	☐
§150(k)7: Lighting for parking lots for 8 or more vehicles shall have lighting that complies with Section 130, 132, and 147. Lighting for parking garages for 8 or more vehicles shall have lighting that complies with Section 130,132 and 146.	☐	☐	☐
§150(k)8: Permanently installed lighting in the enclosed, non-dwelling spaces of low-rise residential buildings with four or more dwelling units shall be high efficacy luminaires OR are controlled by occupant sensor(s) certified to comply with Section 119(d).	☐	☐	☐

Project Title..... Date..03/06/06 13:05:48
Project Address..... PLAN 3 *******
SAN RAMON - CZ 12 *v7.10*
Documentation Author... *******
ConSol
7407 Tam O'Shanter Dr Ste 200
Stockton, CA 95210
209-473-5000
Climate Zone..... 12
Compliance Method..... MICROPAS7 v7.10 for 2005 Standards by Enercomp, Inc.

Building Permit #
Plan Check / Date
Field Check/ Date

MICROPAS7 v7.10 File-TRASH Wth-CTZ12S05 Program-FORM CF-1R
User#-MP0105 User-ConSol Run-Sample

MICROPAS7 ENERGY USE SUMMARY

Energy Use (kTDV/sf-yr)	Standard Design	Proposed Design	Compliance Margin
Space Heating.....	20.79	15.17	5.62
Space Cooling.....	19.06	14.05	5.01
Water Heating.....	9.14	8.52	0.62
North Total	48.99	37.74	11.25
Space Heating.....	20.79	16.47	4.32
Space Cooling.....	19.06	13.19	5.87
Water Heating.....	9.14	8.52	0.62
East Total	48.99	38.18	10.81
Space Heating.....	20.79	16.27	4.52
Space Cooling.....	19.06	10.22	8.84
Water Heating.....	9.14	8.52	0.62
South Total	48.99	35.01	13.98
Space Heating.....	20.79	15.02	5.77
Space Cooling.....	19.06	13.02	6.04
Water Heating.....	9.14	8.52	0.62
West Total	48.99	36.56	12.43

*** Building complies with Computer Performance ***
*** HERS Verification Required for Compliance ***

GENERAL INFORMATION

HERS Verification..... Required
Conditioned Floor Area..... 2748 sf
Building Type..... Single Family Detached
Construction Type ..... New
Fuel Type ..... NaturalGas
Building Front Orientation. Cardinal - N,E,S,W
Number of Dwelling Units... 1
Number of Building Stories. 2
Weather Data Type..... FullYear

Floor Construction Type.... Slab On Grade
Number of Building Zones... 1
Conditioned Volume..... 27877 cf
Slab-On-Grade Area..... 1221 sf
Glazing Percentage..... 23.8 % of floor area
Average Glazing U-factor... 0.35 Btu/hr-sf-F
Average Glazing SHGC..... 0.33
Average Ceiling Height..... 10.1 ft

BUILDING ZONE INFORMATION

Zone Type	Floor Area (sf)	Volume (cf)	# of Dwell Units	# of People	Conditioned	Thermostat Type	Vent Height (ft)	Vent Area (sf)	Verified Leakage or Housewrap
Residence	2748	27877	1.00	8.0	Yes	Setback	8.0	Standard	3.5 SLA

OPAQUE SURFACES

Surface	Frame Type	Area (sf)	U-factor	Cavity R-val	Sheathing R-val	Act Azm	Tilt	Solar Gains	Appendix IV Reference	Location/ Comments
1 Wall	Wood	234	0.102	13	0	0	90	Yes	IV.9 A3	Front Wall
2 Wall	Wood	180	0.074	19	0	0	90	Yes	IV.9 A5	2x6 Front Wall
3 Wall	Wood	318	0.102	13	0	90	90	Yes	IV.9 A3	Left Wall
4 Wall	Wood	187	0.074	19	0	90	90	Yes	IV.9 A5	2x6 Left Wall
5 Wall	Wood	310	0.102	13	0	180	90	Yes	IV.9 A3	Back Wall
6 Wall	Wood	158	0.074	19	0	180	90	Yes	IV.9 A5	2x6 Back Wall
7 Wall	Wood	352	0.102	13	0	270	90	Yes	IV.9 A3	Right Wall
8 Wall	Wood	351	0.074	19	0	270	90	Yes	IV.9 A5	2x6 Right Wall
9 Wall	Wood	607	0.102	13	0	0	90	No	IV.9 A3	Garage Wall
10 Door	Wood	24	0.330	0	0	0	90	Yes	DOOR	Entry Door
11 Door	Wood	18	0.330	0	0	90	90	No	DOOR	Garage Door
12 FloorExt	Wood	649	0.034	30	0	n/a	0	No	IV.21 A7	Above Garage
13 FloorExt	Wood	49	0.048	19	0	n/a	0	No	IV.20 A4	At Cantilever
14 RoofRad	Wood	1819	0.025	38	0	n/a	0	Yes	IV.1 A18	Flat w/ Attic
15 RoofRad	Wood	100	0.048	19	0	n/a	0	Yes	IV.1 A14	At Furnace

PERIMETER LOSSES

Surface	Length (ft)	F2 Factor	Insul R-val	Solar Gains	Appendix IV Reference	Location/ Comments
16 SlabEdge	126	0.730	R-0	No	EDGE.EXT	To Outside
17 SlabEdge	69	0.730	R-0	No	EDGE.EXT	To Garage

FENESTRATION SURFACES

Orientation	Area (sf)	U-factor	SHGC	Act Azm	Tilt	Exterior Shade Type	Location/Comments
1 Wind Front (N)	33.0	0.350	0.330	0	90	Standard	SNGL HNG / VINYL / SSGLZ
2 Wind Front (N)	4.5	0.350	0.330	0	90	Standard	SNGL HNG / VINYL / SSGLZ
3 Wind Front (N)	30.0	0.350	0.330	0	90	Standard	SNGL HNG / VINYL / SSGLZ
4 Wind Front (N)	7.5	0.350	0.330	0	90	Standard	SNGL HNG / VINYL / SSGLZ
5 Wind Front (N)	33.0	0.350	0.330	0	90	Standard	SNGL HNG / VINYL / SSGLZ
6 Wind Front (N)	6.0	0.350	0.330	0	90	Standard	SNGL HNG / VINYL / SSGLZ
7 Wind Left (E)	6.0	0.350	0.330	90	90	Standard	SNGL HNG / VINYL / SSGLZ
8 Wind Left (E)	22.0	0.360	0.330	90	90	Standard	SLIDER / VINYL / SSGLZ
9 Wind Left (E)	13.8	0.350	0.330	90	90	Standard	SNGL HNG / VINYL / SSGLZ
10 Wind Left (E)	18.0	0.360	0.330	90	90	Standard	SLIDER / VINYL / SSGLZ
11 Wind Back (S)	27.5	0.350	0.330	180	90	Standard	SNGL HNG / VINYL / SSGLZ
12 Door Back (S)	20.0	0.340	0.270	180	90	Standard	FRNCH DR / NON-MTL / SSG
13 Wind Back (S)	41.3	0.350	0.330	180	90	Standard	SNGL HNG / VINYL / SSGLZ
14 Wind Back (S)	27.5	0.350	0.330	180	90	Standard	SNGL HNG / VINYL / SSGLZ
15 Wind Back (S)	22.0	0.330	0.360	180	90	Standard	FIXED / VINYL / SSGLZ
16 Wind Back (S)	27.5	0.360	0.330	180	90	Standard	SLIDER / VINYL / SSGLZ
17 Wind Back (S)	41.3	0.350	0.330	180	90	Standard	SNGL HNG / VINYL / SSGLZ
18 Wind Back (S)	20.0	0.330	0.360	180	90	Standard	FIXED / VINYL / SSGLZ
19 Wind Back (S)	12.5	0.330	0.360	180	90	Standard	FIXED / VINYL / SSGLZ
20 Wind Back (S)	16.0	0.330	0.360	180	90	Standard	FIXED / VINYL / SSGLZ
21 Wind Back (S)	10.0	0.330	0.360	180	90	Standard	FIXED / VINYL / SSGLZ
22 Door Right (W)	20.0	0.340	0.270	270	90	Standard	FRNCH DR / NON-MTL / SSG
23 Wind Right (W)	13.8	0.350	0.330	270	90	Standard	SNGL HNG / VINYL / SSGLZ
24 Wind Right (W)	33.0	0.350	0.330	270	90	Standard	SNGL HNG / VINYL / SSGLZ
25 Wind Right (W)	41.3	0.350	0.330	270	90	Standard	SNGL HNG / VINYL / SSGLZ
26 Wind Right (W)	18.0	0.360	0.330	270	90	Standard	SLIDER / VINYL / SSGLZ
27 Wind Right (W)	20.0	0.330	0.360	270	90	Standard	FIXED / VINYL / SSGLZ
28 Wind Right (W)	12.5	0.330	0.360	270	90	Standard	FIXED / VINYL / SSGLZ
29 Wind Right (W)	27.5	0.350	0.330	270	90	Standard	SNGL HNG / VINYL / SSGLZ
30 Wind Right (W)	27.5	0.360	0.330	270	90	Standard	SLIDER / VINYL / SSGLZ

OVERHANGS

Surface	Area (sf)	Window Width	Window Height	Overhang Depth	Overhang Height	Overhang Left Extension	Overhang Right Extension
1 Window	33.0	n/a	5.5	1.0	0.0	n/a	n/a
2 Window	4.5	n/a	3.0	1.0	0.0	n/a	n/a
3 Window	30.0	n/a	5.0	1.0	0.0	n/a	n/a
4 Window	7.5	n/a	3.0	1.0	0.5	n/a	n/a
5 Window	33.0	n/a	5.5	1.0	0.5	n/a	n/a
6 Window	6.0	n/a	3.0	1.0	0.5	n/a	n/a
7 Window	6.0	n/a	3.0	1.0	0.5	n/a	n/a
8 Window	22.0	n/a	5.5	1.0	0.5	n/a	n/a
9 Window	13.8	n/a	5.5	1.0	0.5	n/a	n/a
10 Window	18.0	n/a	4.5	1.0	0.5	n/a	n/a
11 Window	27.5	n/a	5.5	1.0	0.5	n/a	n/a
12 Door	20.0	n/a	8.0	1.0	0.5	n/a	n/a
16 Window	27.5	n/a	5.5	1.0	0.5	n/a	n/a
17 Window	41.3	n/a	5.5	1.0	0.5	n/a	n/a
19 Window	12.5	n/a	2.5	1.0	0.5	n/a	n/a

OVERHANGS

Surface	Area (sf)	Window Width	Window Height	Overhang Depth	Overhang Height	Overhang Left Extension	Overhang Right Extension
21 Window	10.0	n/a	2.5	1.0	0.5	n/a	n/a
26 Window	18.0	n/a	4.5	1.0	0.5	n/a	n/a
27 Window	20.0	n/a	4.0	1.0	0.5	n/a	n/a
28 Window	12.5	n/a	2.5	1.0	0.5	n/a	n/a
29 Window	27.5	n/a	5.5	1.0	0.5	n/a	n/a
30 Window	27.5	n/a	5.5	1.0	0.5	n/a	n/a

SLAB SURFACES

Slab Type	Area (sf)
Standard Slab	1221

HVAC SYSTEMS

System Type	Number of Systems	Minimum Efficiency	Verified EER	Verified Refrig Charge or TXV	Verified Adequate Airflow	Verified Fan Watt Draw	Verified Maximum Cooling Capacity
Furnace	1	0.800 AFUE	n/a	n/a	n/a	n/a	n/a
ACSplit	1	13.00 SEER	11.0	Yes	Yes	0.51 W/cfm	Yes

HVAC SIZING

System Type	Total Heating Load (Btu/hr)	Sensible Cooling Load (Btu/hr)	Design Cooling Capacity (Btu/hr)	Verified Maximum Cooling Capacity (Btu/hr)
Furnace	49001	n/a	n/a	n/a
ACSplit	n/a	30729	35799	41799

Orientation of Maximum..... Front Facing 315 deg (NW)
Sizing Location..... SAN RAMON
Winter Outside Design..... 24 F
Winter Inside Design..... 70 F
Summer Outside Design..... 91 F
Summer Inside Design..... 75 F
Summer Range..... 35 F

DUCT SYSTEMS

System Type	Duct Location	Duct R-value	Verified Duct Leakage	Verified Surface Area	Verified Buried Ducts
Furnace	Attic	R-13	Yes	Yes	Yes
ACSplit	Attic	R-13	Yes	Yes	Yes

SUPPLY DUCT SYSTEM DETAILS

Description	Duct Location	Duct Length (ft)	Duct Dia (in.)	Duct R-Val	Buried Duct	Attic R-Val	Attic Insulation Type
1 Main	Attic	200	6.0	R-4.2	Yes	R-30	Fiberglass

INFILTRATION TESTING DETAILS

Blower Door Leakage Target (CFM50h/SLA)	Blower Door Leakage Minimum (CFM50h/SLA)
2518 / 3.5	1079 / 1.5

WATER HEATING SYSTEMS

Tank Type	Heater Type	Distribution Type	Number in System	Energy Factor	Tank Size (gal)	External Insulation R-value
1 Storage	Gas	ParallelPiping	1	0.62	50	R- n/a

SPECIAL FEATURES AND MODELING ASSUMPTIONS

*** Items in this section should be documented on the plans, ***
*** installed to manufacturer and CEC specifications, and ***
*** verified during plan check and field inspection. ***

This building incorporates HERS verified Insulation Installation.

This building incorporates HERS verified Infiltration.
The Homeowner's Manual must include instructions on how to operate the windows and/or mechanical ventilation to achieve adequate ventilation.

This building incorporates a HERS verified Refrigerant Charge test or a HERS verified Thermostatic Expansion Valve (TXV). If a cooling system is not installed, then HERS verification is not necessary.

This building incorporates HERS verified EER.

This building incorporates HERS verified Fan Power.

This building incorporates HERS verified Adequate Air Flow and HERS verified duct design and layout.

This building incorporates HERS verified Maximum Cooling Capacity.

SPECIAL FEATURES AND MODELING ASSUMPTIONS

This building incorporates HERS verified Duct Leakage.

This building incorporates HERS verified Supply Duct Surface Areas.

This building incorporates HERS verified Buried Ducts.

This is a multiple orientation building. This printout is for the front facing North.

This building incorporates a Radiant Barrier.

This building incorporates non-standard Duct R-value.

HERS REQUIRED VERIFICATION

*** Items in this section require field testing and/or ***
*** verification by a certified home energy rater under ***
*** the supervision of a CEC-approved HERS provider using ***
*** CEC approved testing and/or verification methods and ***
*** must be reported on the CF-4R installation certificate. ***

This building incorporates HERS verified Insulation Installation.

This building incorporates HERS verified Infiltration.
Target and Minimum CFM values measured at 50 pascals are shown in INFILTRATION TESTING DETAILS above. If the measured CFM50h is above the target, then corrective action must be taken to reduce the infiltration and then retest. Alternatively, the compliance calculations could be redone without infiltration testing.
If the measured CFM50h is below the minimum, then the building must meet Uniform Mechanical Code requirements for unusally tight construction and corrective action must be taken to either intentionally increase infiltration or provide for mechanical supply ventilation adequate to maintain the residence at a pressure greater than -5 pascals relative to the outside average air pressure with other continuous ventilation fans operating

This building incorporates a HERS verified Refrigerant Charge test or a HERS verified Thermostatic Expansion Valve (TXV). If a cooling system is not installed, then HERS verification is not necessary.

This building incorporates HERS verified EER.

This building incorporates HERS verified Fan Power.

This building incorporates HERS verified Adequate Air Flow and HERS verified duct design and layout. The air conditioning system must be verified for adequate air flow and the duct design, layout and calculations must be included in the submittal.

This building incorporates HERS verified Maximum Cooling Capacity.

This building incorporates HERS verified Duct Leakage. Target leakage is calculated and documented on the CF-4R. If the measured CFM is above the target, then corrective action must be taken to reduce the duct leakage and then must be retested. Alternatively, the compliance calculations could be redone without duct testing. If ducts are not installed, then HERS

HERS REQUIRED VERIFICATION

verification is not necessary.

This building incorporates HERS verified Supply Duct Surface Areas.

This building incorporates HERS verified Buried Ducts.

REMARKS

DUAL PANE, VINYL WITH SPECTRALLY SELECTIVE GLASS
U-FACTORS = 0.36 (SL) / 0.36 (SH) / 0.33 (FX) / 0.35 (PATIO)
SHGC = 0.33 (SL) / 0.33 (SH) / 0.36 (FX) / 0.35 (PATIO)
SEE MANUFACTURER'S SPECIFICATION SHEET
.
DUAL PANE, NON-METAL WITH SPECTRALLY SELECTIVE GLASS
U-FACTOR = 0.34 (FRENCH DOOR)
SHGC = 0.27 (FRENCH DOOR)
SEE MANUFACTURER'S SPECIFICATION SHEET
.
ELEVATION 'B' TAKEN AS WORST CASE GLAZING SCENARIO.

COMPLIANCE STATEMENT

This certificate of compliance lists the building features and performance specifications needed to comply with Title-24, Parts 1 and 6 of the California Code of Regulations, and the administrative regulations to implement them. This certificate has been signed by the individual with overall design responsibility.

DESIGNER or OWNER

Name.... _____
Company. _____
Address. _____
_____
Phone... _____
License. _____

Signed.. _____
(date)

DOCUMENTATION AUTHOR

Name.... _____
Company. ConSol
Address. 7407 Tam O'Shanter Dr Ste 200
Stockton, CA 95210
Phone... 209-473-5000

Signed.. _____
(date)

ENFORCEMENT AGENCY

Name.... _____
Title... _____
Agency.. _____
_____
Phone... _____

Signed.. _____
(date)

Site Address	Permit Number

Installation certificates (CF-6R) are required for each and every dwelling unit. When the installation of measures that require field verification and diagnostic testing is complete, the builder or the builder's subcontractor shall complete diagnostic testing and the procedures specified in this section. When the installation is complete, the builder or the builder's subcontractor shall complete the CF-6R (Installation Certificate), and keep it at the building site for review by the building department. The builder also shall provide a copy of the Installation Certificate to the HERS rater for any measures requiring field verification and diagnostic testing, per Section 10-103(a).

WATER HEATING SYSTEMS:

Heater Type	CEC Certified Mfr Name & Model Number	Distribution Type (Std, Point-of-Use, etc)	If Recirculation, Control Type	# of Identical Systems	Rated Input (kW or Btu/hr)[1]	Tank Volume (gallons)	Efficiency (EF, RE)[2]	Standby Loss (%)[2]	External Insulation R-value[2]

1. For **small gas storage** (rated input of less than or equal to 75,000 Btu/hr), **electric resistance** and **heat pump water heaters**, list Energy Factor (EF). For **large gas storage water heaters** (rated input of greater than 75,000 Btu/hr), list Recovery (RE), Thermal Efficiency, Standby Loss and Rated Input. For **instantaneous gas water heaters**, list Thermal Efficiency and Rated Input.
2. R-12 external insulation is mandatory for storage water heaters with an energy factor of less than 0.58.

Kitchen Piping:
If indicated on the CF-1R, all hot water piping ≥ 3/4 inches in diameter that runs from the hot water source to the kitchen fixtures is insulated.

Faucets & Shower Heads:
All faucets and showerheads installed are certified to the Energy Commission, pursuant to Title 24, Part 6, Section 111.

Central Water Heating in Buildings with Multiple Dwelling Units (required for prescriptive)

✓

☐ All hot water piping in main circulating loop is insulated to requirements of §150(j)

☐ Central hot water systems serving six or fewer dwelling units which have (1) less than 25' of distribution piping outdoors; (2) zero distribution piping underground; (3) no recirculation pump; and (4) insulation on distribution piping that meets the requirements of Section 150(j)

☐ Central hot water systems serving more than 6 dwelling units - presence of either a time control or a time/temperature control

✓ ☐ I, the undersigned, verify that equipment listed above my signature is: 1) the actual equipment installed; 2) equivalent to or more efficient than that specified in the certificate of compliance (Form CF-1R) submitted for compliance with the *Energy Efficiency Standards* for residential buildings; and 3) equipment that meets or exceeds the appropriate requirements for manufactured devices (from the *Appliance Efficiency Regulations* or Part 6), where applicable.

Installing Subcontractor (Co. Name) OR General Contractor (Co. Name) OR Owner	
Signature:	Date:

Copies to: BUILDING DEPARTMENT, HERS RATER (IF APPLICABLE) BUILDING OWNER AT OCCUPANCY

Site Address	Permit Number

An installation certificate is required to be posted at the building site or made available for all appropriate inspections. (The information provided on this form is required) After completion of final inspection, a copy must be provided to the building department (upon request) and the building owner at occupancy, per Section 10-103(a).

FENESTRATION/GLAZING:

Item	Manufacturer/Brand Name (GROUP LIKE RODUCTS)	Product U-factor[1] (≤ CF-1R value)[2]	Product SHGC[1] (≤CF-1R value)[2]	# of Panes	Total Quantity of Like Product (*Optional*)	Area Square Feet	Exterior Shading Device or Overhang	Comments/Location/ Special Features
1.								
2.								
3.								
4.								
5.								
6.								
7.								
8.								
9.								
10.								
11.								
12.								
13.								
14.								
15.								

1) Use values from a fenestration product's NFRC label. For fenestration products without an NFRC label, use the default values from Section 116 of the Energy Efficiency Standards.

2) Installed U-factor must be less than or equal to values from CF-1R. Installed SHGC must be less than or equal to values from CF-1R, or a shading device (exterior or overhang) is installed as specified on the CF-1R. Alternatively, installed weighted average U-factors for the total fenestration area are less than or equal to values from CF-1R. If using default table SHGC values from §116 identify whether tinted or not.

✓ ☐ I, the undersigned, verify that the fenestration/glazing listed above my signature: 1) is the actual fenestration product installed; 2) is equivalent to or has a lower U-factor and lower SHGC than that specified in the certificate of compliance (Form CF-1R) submitted for compliance with the *Energy Efficiency Standards* for residential buildings; and 3) the product meets or exceeds the appropriate requirements for manufactured devices (from Part 6), where applicable.

Item #s (if applicable)	Signature Date	Installing Subcontractor (Co. Name) OR General Contractor (Co. Name) OR Owner OR Window Distributor
Item #s (if applicable)	Signature Date	Installing Subcontractor (Co. Name) OR General Contractor (Co. Name) OR Owner OR Window Distributor
Item #s (if applicable)	Signature Date	Installing Subcontractor (Co. Name) OR General Contractor (Co. Name) OR Owner OR Window Distributor

Copies to: Building Department, HERS Rater (if applicable) Building Owner at Occupancy

Site Address	Permit Number

An installation certificate is required to be posted at the building site or made available for all appropriate inspections. (The information provided on this form is required) After completion of final inspection, a copy must be provided to the building department (upon request) and the building owner at occupancy, per Section 10-103(a).

HVAC SYSTEMS:

Heating Equipment

.

Equip Type (pkg. heat pump)	CEC Certified Mfr. Name and Model Number	# of Identical Systems	Efficiency (AFUE, etc.)[1] (≥CF-1R value)	Duct Location (attic, etc.)	Duct or Piping R-value	Heating Load (Btu/hr)	Heating Capacity (Btu/hr)

Cooling Equipment

Equip Type (pkg. heat pump)	CEC Certified Mfr. Name and Model Number	# of Identical Systems	Efficiency (SEER or EER)[1] (≥CF-1R value)	Duct Location (attic, etc.)	Duct R-value	Cooling Load (Btu/hr)	Cooling Capacity (Btu/hr)

1. ≥ symbol reads *greater than or equal to what is indicated on the CF-1R value.*
   Include both SEER and EER if compliance credit for high EER air conditioner is claimed.

✓ ☐ I, the undersigned, verify that equipment listed above is: 1) is the actual equipment installed, 2) equivalent to or more efficient than that specified in the certificate of compliance (Form CF-1R) submitted for compliance with the *Energy Efficiency Standards* for residential buildings, and 3) equipment that meets or exceeds the appropriate requirements for manufactured devices (from the *Appliance Efficiency Regulations* or Part 6), where applicable.

Installing Subcontractor (Co. Name) OR General Contractor (Co. Name) OR Owner	
Signature:	Date:

Copies to: BUILDING DEPARTMENT, HERS RATER (IF APPLICABLE) BUILDING OWNER AT OCCUPANCY

Site Address	Permit Number

INSTALLER COMPLIANCE STATEMENT FOR DUCT LEAKAGE

INSTALLER COMPLIANCE STATEMENT

The building was: ✓ ☐ Tested at Final ✓ ☐ Tested at Rough-in

INSTALLER VISUAL INSPECTION AT FINAL CONSTRUCTION STAGE FOR NEW DUCTS:

☐ Remove at least one supply and one return register, and verify that the spaces between the register boot and the interior finishing wall are properly sealed.

☐ If the house rough-in duct leakage test was conducted without an air handler installed, inspect the connection points between the air handler and the supply and return plenums to verify that the connection points are properly sealed.

☐ Inspect all joints to ensure that no cloth backed rubber adhesive duct tape is used on new ducts.

✓ ☐ **DUCT LEAKAGE REDUCTION**

Procedures for field verification and diagnostic testing of air distribution systems are available in RACM, Appendix RC4.3

NEW CONSTRUCTION:			
	Duct Pressurization Test Results (CFM @ 25 Pa)	Measured Values	
1	Enter Tested Leakage Flow in CFM:		
2	Fan Flow: Calculated (Nominal: ✓ ☐ Cooling ✓ ☐ Heating) or ✓ ☐ Measured If Fan Flow is Calculated as 400 cfm/ton x number of tons or as 21.7 cfm/(kBtu/hr) x Heating Capacity in Thousands of Btu/hr, enter total calculated or measured fan flow in CFM here:		✓ ✓
3	Pass if Leakage Percentage < 6% for Final or < 4% at Rough-in without air handling unit: [100 x [_____(Line # 1) / _____(Line # 2)]]		☐ Pass ☐ Fail
ALTERATIONS: Duct System and/or HVAC Equipment Change-Out			
4	Enter Tested Leakage Flow in CFM from **Pre-Test** of Existing Duct System Prior to Duct System Alteration and/or Equipment Change-Out.		
5	Enter Tested Leakage Flow in CFM from **Final Test** of New Duct System or Altered Duct System for Duct System Alteration and/or Equipment Change-Out.		
6	Enter Reduction in Leakage for Altered Duct System [_____(Line # 4) Minus _____(Line # 5)] – (Only if Applicable)		
7	Enter Tested Leakage Flow in CFM to Outside (Only if Applicable)		✓ ✓
8	Entire New Duct System - Pass if Leakage Percentage < 6% for Final. [100 x [_____(Line # 5) / _____Line # 2)]]		☐ Pass ☐ Fail
TEST OR VERIFICATION STANDARDS: For Altered Duct System and/or HVAC Equipment Change-Out Use one of the following four Test or Verification Standards for compliance:			✓ ✓
9	Pass if Leakage Percentage < 15% [100 x [_____(Line # 5) / _____ (Line # 2)]]		☐ Pass ☐ Fail
10	Pass if Leakage to Outside Percentage <10% [100 x [_____(Line # 7) / _____ (Line # 2)]]		☐ Pass ☐ Fail
11	Pass if Leakage Reduction Percentage > 60% [100 x [_____(Line # 6) / _____ (Line # 4)]] and Verification by Smoke Test and Visual Inspection.		☐ Pass ☐ Fail
12	Pass if Sealing of all Accessible Leaks and Verification by Smoke Test and Visual Inspection		☐ Pass ☐ Fail
	Pass if One of Lines # 9 through # 12 pass		☐ Pass ☐ Fail

✓ ☐ I, the undersigned, verify that the above diagnostic test results were performed in conformance with the requirements for compliance credit. I, the undersigned, also certify that the newly installed or retrofit Air-Distribution System Ducts, Plenums and Fans comply with Mandatory requirements specified in Section 150 (m) of the 2005 Building Energy Efficiency standards.

Installing Subcontractor (Co. Name) OR General Contractor (Co. Name) OR Owner	
Signature:	Date:

Copies to: BUILDING DEPARTMENT, HERS RATER (IF APPLICABLE) BUILDING OWNER AT OCCUPANCY

Site Address	Permit Number

✓ ☐ **THERMOSTATIC EXPANSION VALVE (TXV)**

Procedures for field verification of thermostatic expansion valves are available in RACM, Appendix RI.

				✓	✓
✓	☐ Yes	☐ No	Access is provided for inspection. The procedure shall consist of visual verification that the TXV is installed on the system and installation of the specific equipment shall be verified.	☐	☐
			Yes is a pass	Pass	Fail

✓ ☐ **REFRIGERANT CHARGE MEASUREMENT**

Verification for Required Refrigerant Charge and Adequate Airflow for Split System Space Cooling Systems without Thermostatic Expansion Valves

Outdoor Unit Serial #		
Location		
Outdoor Unit Make		
Outdoor Unit Model		
Cooling Capacity		Btu/hr
Date of Verification		
Date of Refrigerant Gauge Calibration		(must be checked monthly)
Date of Thermocouple Calibration		(must be checked monthly)

Standard Charge Measurement Procedure (outdoor air dry-bulb 55°F and above):

Procedures for Determining Refrigerant Charge using the Standard Method are available in RACM, Appendix RD2.

Note: The system should be installed and charged in accordance with the manufacturer's specifications before starting this procedure.

Measured Temperatures

Supply (evaporator leaving) air dry-bulb temperature (Tsupply, db)		°F
Return (evaporator entering) air dry-bulb temperature (Treturn, db)		°F
Return (evaporator entering) air wet-bulb temperature (Treturn, wb)		°F
Evaporator saturation temperature (Tevaporator, sat)		°F
Suction line temperature (Tsuction, db)		°F
Condenser (entering) air dry-bulb temperature (Tcondenser, db)		°F

Superheat Charge Method Calculations for Refrigerant Charge

Actual Superheat = Tsuction, db – Tevaporator, sat		°F
Target Superheat (from Table RD-2)		°F
Actual Superheat – Target Superheat (System passes if between -5 and +5°F)		°F

Temperature Split Method Calculations for Adequate Airflow

Split Method Calculation is not necessary if Adequate Airflow credit is taken

Actual Temperature Split = T return, db Tsupply, db		°F
Target Temperature Split (from Table RD3)		°F
Actual Temperature Split Target Temperature Split (System passes if between -3°F and +3°F or, upon remeasurement, if between -3°F and -100°F)		°F

Site Address	Permit Number

Standard Charge Measurement Summary:

System shall pass both refrigerant charge and adequate airflow calculation criteria from the same measurements. If corrective actions were taken, both criteria must be remeasured and recalculated.

✓	☐ Yes	☐ No	System Passes

Alternate Charge Measurement Procedure (outdoor air dry-bulb below 55 ^{o}F)

Note: The system should be installed and charged in accordance with the manufacturer's specifications and installer verification shall be documented on CF-6R before starting this procedure. If outdoor air dry-bulb is 55 ^{o}F or above, installer shall use the Standard Charge Measure Procedure:

Procedures for Determining Refrigerant Charge using the Alternate Method are available in RACM, Appendix RD3.

Weigh-In Charging Method for Refrigerant Charge

Actual liquid line length:		ft
Manufacturer's Standard liquid line length:		ft
Difference (Actual – Standard):		ft
Manufacturer's correction (ounces per foot) _____x difference in length =_____ounces (+ = add) (- = remove)		

Measured Airflow Method for Adequate Airflow Verification *available in RACM, Appendix RD2.6*

Calculated Airflow: Cooling Capacity (Btu/hr)_____ X 0.033 (cfm/Btu-hr) = _____ CFM
Measured Airflow is _____CFM (Measured airflow must be greater than the calculated airflow).

Alternate Charge Measurement Summary:

System shall pass both refrigerant charge and adequate airflow calculation criteria from the same measurements. If corrective actions were taken, both criteria must be remeasured and recalculated.

✓	☐ Yes	☐ No	*System Passes*

Installing Subcontractor (Co. Name) OR General Contractor (Co. Name) OR Owner	
Signature:	Date:

Copies to: BUILDING DEPARTMENT, HERS RATER (IF APPLICABLE) BUILDING OWNER AT OCCUPANCY

Site Address	Permit Number

MISCELLANEOUS CREDITS

✓ ☐ DIAGNOSTIC SUPPLY DUCT LOCATION, SURFACE AREA AND R-VALUE

Procedures for field verification and diagnostic testing for this group compliance credits are available in RACM, Appendix RC, RE & RH.

✓ ☐ LESS THAN 12 LINEAL FEET OF SUPPLY DUCT OUTSIDE OF CONDITIONED SPACE COMPLIANCE CREDIT

✓	☐Yes	☐No	Less than 12 lineal feet of supply duct outside of conditioned space.		
			Yes to this compliance credit is a pass	✓ ☐ Pass	✓ ☐ Fail

✓ ☐ SUPPLY DUCTS LOCATED IN CONDITIONED SPACE COMPLIANCE CREDIT

✓	☐ Yes	☐ No	Ducts are located within the conditioned volume of building.		
			Yes to this compliance credit is a pass	✓ ☐ Pass	✓ ☐ Fail

Duct System Design verification is required for a compliance credit for the following:

1. **Supply duct surface area reduction**
2. **Buried supply ducts on the ceiling**
3. **Deeply buried supply ducts**

✓ ☐ DUCT SYSTEM DESIGN VERIFICATION

✓	☐ Yes	☐ No	Adequate airflow verified.		
✓	☐ Yes	☐ No	The duct system design plan meets the requirements specified in RACM, Appendix RE, Section RE.4.2.		
✓	☐ Yes	☐ No	The duct system design plan exists on building plans.		
✓	☐ Yes	☐ No	Duct sizes, duct system layout and locations of supply & return registers match the duct system design plan.		
			Yes to all is a pass	✓ ☐ Pass	✓ ☐ Fail

✓ ☐ SUPPLY DUCTS SURFACE AREA REDUCTION COMPLIANCE CREDIT

Attic	Crawl Space	Basement	Covered	Deeply Covered	Other	Duct Diameter	R-4.2 Surface Area	R-6.0 Surface Area	R-8.0 Surface Area
☐	☐	☐	☐	☐	☐				
☐	☐	☐	☐	☐	☐				
☐	☐	☐	☐	☐	☐				
☐	☐	☐	☐	☐	☐				
☐	☐	☐	☐	☐	☐				
☐	☐	☐	☐	☐	☐				
☐	☐	☐	☐	☐	☐				
						Total Surface Area for Each R-Value =			
✓	☐ Yes	☐ No	Matches Performance's CF-1R?					✓	✓
						Yes to all is a pass		☐ Pass	☐ Fail

✓ ☐ BURIED DUCTS ON THE CEILING COMPLIANCE CREDIT

	☐ Yes	☐ No	Buried Ducts on the Ceiling		
	☐ Yes	☐ No	Verified High Insulation Installation Quality	✓	✓
Yes to duct system design, supply duct surface area reduction and this compliance credit is a pass				☐ Pass	☐ Fail

✓ ☐ DEEPLY BURIED DUCTS COMPLIANCE CREDIT

✓	☐ Yes	☐ No	Deeply Buried Ducts		
✓	☐ Yes	☐ No	Verified High Insulation Installation Quality	✓	✓
Yes to duct system design, supply duct surface area reduction and this compliance credit is a pass				☐Pass	☐ Fail

Copies to: BUILDING DEPARTMENT, HERS RATER (IF APPLICABLE) BUILDING OWNER AT OCCUPANCY

Site Address	Permit Number

✓☐ FAN WATT DRAW

Procedures for measuring the air handler watt draw are available in RACM, Appendix RE3.2.

✓ **Method For Fan Watt Draw Measurement**					
☐	RE3.2.1	Portable Watt Meter Measurement			
☐	RE3.2.2	Utility Revenue Meter Measurement			
		Measured Fan Watt Draw			Watts
		Measured Fan Flow (enter total cfm from airflow verification)			cfm
		Enter results of Watts/cfm			Watts/cfm
			✓	✓	
✓ ☐ Yes	☐ No	Measured fan watt/cfm draw is equal to or lower than the fan watt/cfm draw documented in CF-1R	☐	☐	
		Yes is a pass	Pass	Fail	

✓☐ ADEQUATE AIRFLOW VERIFICATION

Procedures for measuring the airflow are available in RACM, Appendix RE3.1.

✓ **Method For Airflow Measurement**					
☐	RE4.1.1	Diagnostic Fan Flow Using Flow Capture Hood			
☐	RE4.1.2	Diagnostic Fan Flow Using Plenum Pressure Matching			
☐	RE4.1.3	Diagnostic Fan Flow Using Flow Grid Measurement			
☐ Yes	☐ No	Duct design exists on plans			
		Measured Airflow:			Total cfm
		Rated Tons cfm/ton			cfm/ton
✓ ☐ Yes	☐ No	Measured airflow is greater than the criteria in Table RE-2	✓	✓	
		Yes is a pass	☐ Pass	☐ Fail	

✓☐ MAXIMUM COOLING CAPACITY

Procedures for determining maximum cooling load capacity are available in RACM, Appendix RF3.

1	✓	☐ Yes	☐ No	Adequate airflow verified (see adequate airflow credit)		
2	✓	☐ Yes	☐ No	Refrigerant charge or TXV		
3	✓	☐ Yes	☐ No	Duct leakage reduction credit verified		
4	✓	☐ Yes	☐ No	Cooling capacities of installed systems are ≤ to maximum cooling capacity indicated on the Performance's CF-1R and RF-3.		
5	✓	☐ Yes	☐ No	If the cooling capacities of installed systems are > than maximum cooling capacity in the CF-1R, then the electrical input for the installed systems must be ≤ to electrical input in the CF-1R.	✓ ☐	✓ ☐
				Yes to 1, 2, and 3; and Yes to either 4 or 5 is a pass	Pass	Fail

✓☐ HIGH EER AIR CONDITIONER

Procedures for verification are available in RACM, Appendix RI.

1	✓	☐ Yes	☐ No	EER values of installed systems match the CF-1R		
2	✓	☐ Yes	☐ No	For split system, indoor coil is matched to outdoor coil	✓	✓
3	✓	☐ Yes	☐ No	Time Delay Relay Verified (If Required)	☐	☐
				Yes to 1 and 2; and 3 (If Required) is a pass	Pass	Fail

Installing Subcontractor (Co. Name) OR General Contractor (Co. Name) OR Owner	
Signature:	Date:

Copies to: BUILDING DEPARTMENT, HERS RATER (IF APPLICABLE) BUILDING OWNER AT OCCUPANCY

Site Address	Permit Number

An installation certificate is required to be posted at the building site or made available for all appropriate inspections. (The information provided on this form is required) After completion of final inspection, a copy must be provided to the building department (upon request) and the building owner at occupancy, per Section 10-103(a).

BUILDING ENVELOPE LEAKAGE DIAGNOSTICS

✓ ☐ **ENVELOPE SEALING INFILTRATION REDUCTION**

Procedures for field verification and diagnostic testing of envelope leakage are available in RACM, Appendix RC.

Diagnostic Testing Results

	✓	✓	Building Envelope Leakage (CFM @ 50 Pa) as measured by Rater:		
1.	☐ Yes	☐ No	Measured envelope leakage less than or equal to the required level from CF-1R?		
2.	☐ Yes	☐ No	Is Mechanical Ventilation shown as required on the CF-1R?		
2a.	☐ Yes	☐ No	If Mechanical Ventilation is required on the CF-1R ('Yes' in line 2), has it been installed?		
2b.	☐ Yes	☐ No	Check this box 'yes' if mechanical ventilation is required ('Yes' in line 2) and ventilation fan watts are no greater than shown on CF-1R. Measured Watts =		
3.	☐ Yes	☐ No	Check this box "yes" if measured building infiltration (CFM @ 50 Pa) is greater than the CFM @ 50 values shown for an SLA of 1.5 on CF-1R (If this box is checked no, mechanical ventilation is required.)		
4.	☐ Yes	☐ No	Check this box "yes" if measured building infiltration (CFM @ 50 Pa) is less than the CFM @ 50 values shown for an SLA of 1.5 on CF-1R, mechanical ventilation is installed and house pressure is greater than minus 5 Pascal with all exhaust fans operating.		
			Pass if: a. Yes in line 1 and line 3, or b. Yes in line 1 and line2, 2a, and 2b, or c. Yes in line 1 and Yes in line 4. Otherwise fail.	✓ ☐ Pass	✓ ☐ Fail

✓ ☐ I, the undersigned, verify that the building envelope leakage meets the requirements claimed for building leakage reduction below default assumptions as used for compliance on the CF-1R. This is to certify that the above diagnostic test results and the work I performed associated with the test(s) is in conformance with the requirements for compliance credit. (The builder shall provide the HERS provider a copy of the CF-6R signed by the builder employees or subcontractors certifying that diagnostic testing and installation meet the requirements for compliance credit.)

Test Performed	
Installing Subcontractor (Co. Name) OR General Contractor (Co. Name) OR Owner	
Signature:	Date:

Copies to: BUILDING DEPARTMENT, HERS RATER (IF APPLICABLE), BUILDING OWNER AT OCCUPANCY

Site Address	Permit Number

Insulation Installation Quality Certificate

✓ ☐ Description of Insulation, (CF-6R, formerly IC-1) signed by the installer stating: insulation manufacturer's name, material identification, installed R-values, and for loose-fill insulation: minimum weight per square foot and minimum inches

✓ ☐ Installation meets all applicable requirements as specified in the High Quality Insulation Installation Procedures (ACM, Appendix RH)

✓ FLOOR			
☐ Yes	☐ No	☐ NA	All floor joist cavity insulation installed to uniformly fit the cavity side-to-side and end-to-end
☐ Yes	☐ No	☐ NA	Insulation in contact with the subfloor or rim joists insulated
☐ Yes	☐ No	☐ NA	Insulation properly supported to avoid gaps, voids, and compression
✓ WALLS			
☐ Yes	☐ No	☐ NA	*Wall stud cavities caulked or foamed to provide an air tight envelope*
☐ Yes	☐ No	☐ NA	Wall stud cavity insulation uniformly fills the cavity side-to-side, top-to-bottom, and front-to-back
☐ Yes	☐ No	☐ NA	No gaps
☐ Yes	☐ No	☐ NA	No voids over 3/4" deep or more than 10% of the batt surface area.
☐ Yes	☐ No	☐ NA	Hard to access wall stud cavities such as; corner channels, wall intersections, and behind tub/shower enclosures insulated to proper R-Value
☐ Yes	☐ No	☐ NA	Small spaces filled
☐ Yes	☐ No	☐ NA	Rim-joists insulated
☐ Yes	☐ No	☐ NA	Loose fill wall insulation meets or exceeds manufacturer's minimum weight-per-square-foot requirement
✓ ROOF/CEILING PREPARATION			
☐ Yes	☐ No	☐ NA	All draft stops in place to form a continuous ceiling and wall air barrier
☐ Yes	☐ No	☐ NA	All drops covered with hard covers
☐ Yes	☐ No	☐ NA	All draft stops and hard covers caulked or foamed to provide an air tight envelope
☐ Yes	☐ No	☐ NA	All recessed light fixtures IC and air tight (AT) rated and sealed with a gasket or caulk between the housing and the ceiling
☐ Yes	☐ No	☐ NA	Floor cavities on multiple-story buildings have air tight draft stops to all adjoining attics
☐ Yes	☐ No	☐ NA	Eave vents prepared for blown insulation - maintain net free-ventilation area
☐ Yes	☐ No	☐ NA	Knee walls insulated or prepared for blown insulation
☐ Yes	☐ No	☐ NA	Area under equipment platforms and cat-walks insulated or accessible for blown insulation
☐ Yes	☐ No	☐ NA	Attic rulers installed

Site Address	Permit Number

✓ **ROOF/CEILING BATTS**

☐ Yes	☐ No	☐ NA	No gaps
☐ Yes	☐ No	☐ NA	No voids over ¾ in. deep or more than 10% of the batt surface area.
☐ Yes	☐ No	☐ NA	Insulation in contact with the air-barrier
☐ Yes	☐ No	☐ NA	Recessed light fixtures covered
☐ Yes	☐ No	☐ NA	*Net free-ventilation area maintained at eave vents*

✓ **ROOF/CEILING LOOSE-FILL**

☐ Yes	☐ No	☐ NA	Insulation uniformly covers the entire ceiling (or roof) area from the outside of all exterior walls.
☐ Yes	☐ No	☐ NA	Baffles installed at eaves vents or soffit vents - maintain net free-ventilation area of eave vent
☐ Yes	☐ No	☐ NA	Attic access insulated
☐ Yes	☐ No	☐ NA	Recessed light fixtures covered
☐ Yes	☐ No	☐ NA	Insulation at proper depth – insulation rulers visible and indicating proper depth and R-value
☐ Yes	☐ No	☐ NA	*Loose-fill insulation meets or exceeds manufacturer's minimum weight and thickness requirements for the target R-value. Target R-value _____. Manufacturer's minimum required weight for the target R-value _____ (pounds-per-square-foot). Manufacturer's minimum required thickness at time of installation _____. Manufacturer's minimum required settled thickness _____. Note: To receive compliance credit the HERS rater shall verify that the manufacturer's minimum weight and thickness has been achieved for the target R-value. (CF-6R only)*

DECLARATION

✓ ☐ I hereby certify that the installation meets all applicable requirements as specified in the Insulation Installation Procedures.

Installing Subcontractor (Co. Name) OR General Contractor (Co. Name) OR Owner	
Signature:	Date:

Copies to: BUILDING DEPARTMENT, HERS RATER (IF APPLICABLE), BUILDING OWNER AT OCCUPANCY

Site Address	Permit Number
County Subdivision	Lot Number

Description of Insulation (Formerly IC-1 Form)

1. RAISED FLOOR
   Material _____ Brand Name _____
   Thickness (inches) _____ Thermal Resistance (R-Value) _____

2. SLAB FLOOR/PERIMETER
   Material _____ Brand Name _____
   Thickness (inches) _____ Thermal Resistance (R-Value) _____
   Perimeter Insulation Depth (inches) _____

3. EXTERIOR WALL
   Frame Type _____
   A. Cavity Insulation
      Material _____ Brand Name _____
      Thickness (inches) _____ Thermal Resistance (R-Value) _____
   B . Exterior Foam Sheathing
      Material _____ Brand Name _____
      Thickness (inches) _____ Thermal Resistance (R-Value) _____

4. FOUNDATION WALL
   Material _____ Brand Name _____
   Thickness (inches) _____ Thermal Resistance (R-Value) _____

5. CEILING
   Batt or Blanket Type _____ Brand Name _____
   Thickness (inches) _____ Thermal Resistance (R-Value) _____
   Loose Fill Type _____ Brand _____
   Contractor's min installed weight/ft² _____lb Minimum thickness _____inches
   Manufacturer's installed weight per square foot to achieve Thermal Resistance (R-Value) _____

6. ROOF
   Material _____ Brand Name _____
   Thickness (inches) _____ Thermal Resistance (R-Value) _____

Declaration

✓ ☐ I hereby certify that the above insulation was installed in the building at the above location in conformance with the current *Energy Efficiency Standards* for residential buildings (Title 24, Part 6, California Code of Regulations) as indicated on the Certificate of Compliance, where applicable.

Item #s (if applicable)	Signature Date	Installing Subcontractor (Co. Name) OR General Contractor (Co. Name) OR Owner OR Window Distributor
Item #s (if applicable)	Signature Date	Installing Subcontractor (Co. Name) OR General Contractor (Co. Name) OR Owner OR Window Distributor
Item #s (if applicable)	Signature Date	Installing Subcontractor (Co. Name) OR General Contractor (Co. Name) OR Owner OR Window Distributor

CERTIFICATE OF FIELD VERIFICATION & DIAGNOSTIC TESTING (Page 1 of 8) CF-4R

Project Address	Builder or Installer Name
Builder or Installer Contractor Telephone	Plan/Permit (Additions or Alterations) Number
HERS Rater Telephone	Sample Group Number
Compliance Method (Prescriptive)	Climate Zone
Certifying Signature Date	Sample House Number
Firm	HERS Provider
Street Address:	City/State/Zip:

Copies to: **BUILDER, HERS PROVIDER AND BUILDING DEPARTMENT**

HERS RATER COMPLIANCE STATEMENT

The house was: ✓ ☐ Tested ✓ ☐ Approved as part of sample testing, but was not tested

As the HERS rater providing diagnostic testing and field verification, I certify that the house identified on this form complies with the diagnostic tested compliance requirements as checked ✓ on this form. The HERS rater must check and verify that the new distribution system is fully ducted and correct tape is used before a CF-4R may be released on every tested building. The HERS rater must not release the CF-4R until a properly completed and signed CF-6R has been received for the sample and tested buildings.

✓ ☐ The installer has provided a copy of CF-6R (Installation Certificate).
New ducts are fully ducted (i.e., does not use building cavities as plenums or platform returns in lieu of ducts).
New ducts with cloth backed, rubber adhesive duct tape is installed, mastic and draw bands are used in combination with cloth backed, rubber adhesive duct tape to seal leaks at duct connections.).

✓ ☐ **MINIMUM REQUIREMENTS FOR DUCT LEAKAGE REDUCTION COMPLIANCE CREDIT**

Procedures for field verification and diagnostic testing of air distribution systems are available in RACM, Appendix RC4.3.

Duct Diagnostic Leakage Testing Results

NEW CONSTRUCTION:			
	Duct Pressurization Test Results (CFM @ 25 Pa)	Measured Values	
1	Enter Tested Leakage Flow in CFM:		
2	Fan Flow: Calculated (Nominal: ✓ ☐ Cooling ✓ ☐ Heating) or ✓ ☐ Measured Enter Total Fan Flow in CFM:		✓ ✓
3	Pass if Leakage Percentage < 6% [100 x [_____(Line # 1) / _____(Line # 2)]]		☐ Pass ☐ Fail
ALTERATIONS: Duct System and/or HVAC Equipment Change-Out			
4	Enter Tested Leakage Flow in CFM from CF-6R: **Pre-Test** of Existing Duct System Prior to Duct System Alteration and/or Equipment Change-Out.		
5	Enter Tested Leakage Flow in CFM: **Final Test** of New Duct System or Altered Duct System for Duct System Alteration and/or Equipment Change-Out.		
6	Enter Reduction in Leakage for Altered Duct System [_____(Line # 4) Minus _____(Line # 5)] (Only if Applicable)		
7	Enter Tested Leakage Flow in CFM to Outside (Only if Applicable)		✓ ✓
8	Entire New Duct System - Pass if Leakage Percentage < 6% [100 x [_____(Line # 5) / _____Line # 2)]]		☐ Pass ☐ Fail
TEST OR VERIFICATION STANDARDS: For Altered Duct System and/or HVAC Equipment Change-Out Use one of the following four Test or Verification Standards for compliance:			✓ ✓
9	Pass if Leakage Percentage < 15% [100 x [_____(Line # 5) / _____ (Line # 2)]]		☐ Pass ☐ Fail
10	Pass if Leakage to Outside Percentage < 10% [100 x [_____(Line # 7) / _____ (Line # 2)]]		☐ Pass ☐ Fail
11	Pass if Leakage Reduction Percentage > 60% [100 x [_____(Line # 6) / _____ (Line # 4)]] and Verification by Smoke Test and Visual Inspection		☐ Pass ☐ Fail
	Pass if Sealing of all Accessible Leaks and Verification by Smoke Test and Visual Inspection		☐ Pass ☐ Fail
	Pass if One of Lines # 9 through # 12 pass		☐ Pass ☐ Fail

Project Address	Builders Name

Copies to: **BUILDER, HERS PROVIDER AND BUILDING DEPARTMENT**

✓ ☐ DIAGNOSTIC SUPPLY DUCT LOCATION, SURFACE AREA AND R-VALUE

Procedures for field verification and diagnostic testing for this group compliance credits are available in RACM, Appendix RC, RE & RH.

✓ ☐ LESS THAN 12 LINEAL FEET OF SUPPLY DUCT OUTSIDE OF CONDITIONED SPACE COMPLIANCE CREDIT

✓	☐Yes	☐No	Less than 12 lineal feet of supply duct outside of conditioned space.		
			Yes to this compliance credit is a pass	✓ ☐ Pass	✓ ☐ Fail

✓ ☐ SUPPLY DUCTS LOCATED IN CONDITIONED SPACE COMPLIANCE CREDIT

✓	☐ Yes	☐ No	Ducts are located within the conditioned volume of building.		
			Yes to this compliance credit is a pass	✓ ☐ Pass	✓ ☐ Fail

Duct System Design verification is required for a compliance credit for the following:

1. **Supply duct surface area reduction**
2. **Buried supply ducts on the ceiling**
3. **Deeply buried supply ducts**

✓ ☐ DUCT SYSTEM DESIGN VERIFICATION

✓	☐ Yes	☐ No	Adequate airflow verified		
✓	☐ Yes	☐ No	The duct system design plan meets the requirements specified in RACM, Appendix RE, Section RE.4.2		
✓	☐ Yes	☐ No	The duct system design plan exists on building plans		
✓	☐ Yes	☐ No	Duct sizes, duct system layout and locations of supply & return registers match the duct system design plan		
			Yes to all is a pass	✓ ☐ Pass	✓ ☐ Fail

✓ ☐ SUPPLY DUCTS SURFACE AREA REDUCTION COMPLIANCE CREDIT

Attic	Crawl Space	Basement	Covered	Deeply Covered	Other	Duct Diameter	R-4.2 Surface Area	R-6.0 Surface Area	R-8.0 Surface Area
☐	☐	☐	☐	☐	☐				
☐	☐	☐	☐	☐	☐				
☐	☐	☐	☐	☐	☐				
☐	☐	☐	☐	☐	☐				
☐	☐	☐	☐	☐	☐				
☐	☐	☐	☐	☐	☐				
☐	☐	☐	☐	☐	☐				
☐	☐	☐	☐	☐	☐				
						Total Surface Area for Each R-Value =			
✓	☐ Yes	☐ No	Duct Surface Area matches Performance's CF-1R?					✓	✓
						Yes to all is a pass		☐ Pass	☐ Fail

✓ ☐ BURIED DUCTS ON THE CEILING COMPLIANCE CREDIT

✓	☐ Yes	☐ No	Buried Ducts on the Ceiling		
✓	☐ Yes	☐ No	Verified High Insulation Installation Quality	✓	✓
Yes to duct system design, supply duct surface area reduction and this compliance credit is a pass				☐ Pass	☐ Fail

✓ ☐ DEEPLY BURIED DUCTS COMPLIANCE CREDIT

✓	☐ Yes	☐ No	Deeply Buried Ducts		
✓	☐ Yes	☐ No	Verified High Insulation Installation Quality	✓	✓
Yes to duct system design, supply duct surface area reduction and this compliance credit is a pass				☐ Pass	☐ Fail

Project Address	Builder Name
Builder Contact Telephone	Plan Number
HERS Rater Telephone	Sample Group Number
Compliance Method (Prescriptive)	Climate Zone
Certifying Signature Date	Sample House Number
Firm	HERS Provider
Street Address:	City/State/Zip:

Copies to: **BUILDER, HERS PROVIDER AND BUILDING DEPARTMENT**

HERS RATER COMPLIANCE STATEMENT

The house was: ✓☐ Tested ✓☐ Approved as part of sample testing, but was not tested

As the HERS rater providing diagnostic testing and field verification, I certify that the house identified on this form complies with the diagnostic tested compliance requirements as checked on this form.

✓☐ The installer has provided a copy of CF-6R (Installation Certificate).

✓☐ THERMOSTATIC EXPANSION VALVE (TXV)

Procedures for field verification of thermostatic expansion valves are available in RACM, Appendix RI.

				✓	✓
✓	☐ Yes	☐ No	Access is provided for inspection. The procedure shall consist of visual verification that the TXV is installed on the system and installation of the specific equipment shall be verified.	☐	☐
			Yes is a pass	Pass	Fail

✓☐ REFRIGERANT CHARGE MEASUREMENT

Verification for Required Refrigerant Charge for Split System Space Cooling Systems without Thermostatic Expansion Valves

Outdoor Unit Serial #		
Location		
Outdoor Unit Make		
Outdoor Unit Model		
Cooling Capacity		Btu/hr
Date of Verification		
Date of Refrigerant Gauge Calibration		(must be checked monthly)
Date of Thermocouple Calibration		(must be checked monthly)

Standard Charge Measurement (outdoor air dry-bulb 55 °F and above):

Note: The system should be installed and charged in accordance with the manufacturer's specifications and installer verification shall be documented on CF-6R before starting this procedure. If outdoor air dry-bulb is below 55 °F rater shall use the Alternative Charge Measure Procedure

Procedures for Determining Refrigerant Charge using the Standard Method are available in RACM, Appendix RD2.

✓	☐ Yes	☐ No	A copy of CF-6R (Installation Certificate) has been provided with refrigerant charge measurement documented.

Project Address	Builders Name

Copies to: **BUILDER, HERS PROVIDER AND BUILDING DEPARTMENT**

Measured Temperatures

Supply (evaporator leaving) air dry-bulb temperature (Tsupply, db)		^{o}F
Return (evaporator entering) air dry-bulb temperature (Treturn, db)		^{o}F
Return (evaporator entering) air wet-bulb temperature (Treturn, wb)		^{o}F
Evaporator saturation temperature (Tevaporator, sat)		^{o}F
Suction line temperature (Tsuction, db)		^{o}F
Condenser (entering) air dry-bulb temperature (Tcondenser, db)		^{o}F

Superheat Charge Method Calculations for Refrigerant Charge

Actual Superheat = Tsuction, db – Tevaporator, sat		^{o}F
Target Superheat (from Table RD-2)		^{o}F
Actual Superheat – Target Superheat (System passes if between -5 and +5°F)		^{o}F

Temperature Split Method Calculations for Adequate Airflow
Split Method Calculation is not necessary if Adequate Airflow credit is taken

Actual Temperature Split = T return, db - Tsupply, db		^{o}F
Target Temperature Split (from Table RD3)		^{o}F
Actual Temperature Split - Target Temperature Split (System passes if between -3°F and +3°F or, upon remeasurement, if between -3°F and -100°F)		^{o}F

Standard Charge Measurement Summary:
System shall pass both refrigerant charge and adequate airflow calculation criteria from the same measurements. If corrective actions were taken, both criteria must be remeasured and recalculated

✓	☐ Yes	☐ No	System Passes

Alternative Charge Measurement (outdoor air dry-bulb below 55 ^{o}F)
Note: The system should be installed and charged in accordance with the manufacturer's specifications and installer verification shall be documented on CF-6R before starting this procedure. If outdoor air dry-bulb is 55 ^{o}F or above, rater shall use the Standard Charge Measure Procedure:
Procedures for Determining Refrigerant Charge using the Alternative Method are available in RACM, Appendix RD3.

✓	☐ Yes	☐ No	*A copy of CF-6R (Installation Certificate) has been provided with refrigerant charge measurement documented.*

Weigh-In Charging Method for Refrigerant Charge

Actual liquid line length:		ft
Manufacturer's Standard liquid line length:		ft
Difference (Actual – Standard):		ft

Manufacturer's correction (ounces per foot) _____x difference in length =_____ounces
("+ " = add ounces) ("-" = remove ounces)

Alternative Charge Measurement Summary:
System shall pass both refrigerant charge and adequate airflow calculation criteria from the same measurements. If corrective actions were taken, both criteria must be remeasured and recalculated.

✓	☐ Yes	☐ No	*System Passes*

Project Address	Builder Name
Builder Contact Telephone	Plan Number
HERS Rater Telephone	Sample Group Number
Certifying Signature Date	Sample House Number
Firm	HERS Provider
Street Address:	City/State/Zip:

Copies to: **BUILDER, HERS PROVIDER AND BUILDING DEPARTMENT**

HERS RATER COMPLIANCE STATEMENT

The house was: ✓ ☐ Tested ✓ ☐ Approved as part of sample testing, but was not tested

As the HERS rater providing diagnostic testing and field verification, I certify that the house identified on this form complies with the diagnostic tested compliance requirements as checked on this form.

✓ ☐ The installer has provided a copy of CF-6R (Installation Certificate).

✓ ☐ ADEQUATE AIRFLOW VERIFICATION

Procedures for field verification and diagnostic testing of adequate airflow are available in RACM, Appendix RE4.1.

	Method For Airflow Measurement				
✓	☐ Yes	☐ No	Duct design exists on plans		
☐	RE4.1.1		Diagnostic Fan Flow Using Flow Capture Hood		
☐	RE4.1.2		Diagnostic Fan Flow Using Plenum Pressure Matching		
☐	RE4.1.3		Diagnostic Fan Flow Using Flow Grid Measurement		
			Measured Airflow:		Total CFM
			Rated Tons:		cfm/ton
				✓	✓
✓	☐ Yes	☐ No	Measured airflow is greater than the criteria in Table RE-2	☐	☐
			Yes is a pass	Pass	Fail

✓ ☐ MAXIMUM COOLING CAPACITY

Procedures for determining maximum cooling load capacity are available in RACM, Appendix RF3.

1	✓	☐ Yes	☐ No	Adequate airflow verified (see adequate airflow credit)		
2	✓	☐ Yes	☐ No	Refrigerant charge or TXV		
3	✓	☐ Yes	☐ No	Duct leakage reduction credit verified		
4	✓	☐ Yes	☐ No	Cooling capacities of installed systems are ≤ to maximum cooling capacity indicated on the Performance's CF-1R and RF-3.		
5	✓	☐ Yes	☐ No	If the cooling capacities of installed systems are > than maximum cooling capacity in the CF-1R, then the electrical input for the installed systems must be ≤ to electrical input in the CF-1R and RF-4.	✓ ☐	✓ ☐
				Yes to 1, 2, and 3; and Yes to either 4 or 5 is a pass	Pass	Fail

✓ ☐ HIGH EER AIR CONDITIONER

Procedures for verification are available in RACM, Appendix RI.

1	✓	☐ Yes	☐ No	EER values of installed systems match the CF-1R		
2	✓	☐ Yes	☐ No	For split system, indoor coil is matched to outdoor coil	✓	✓
3	✓	☐ Yes	☐ No	Time Delay Relay Verified (If Required)	☐	☐
				Yes to 1 and 2; and 3 (If Required) is a pass	Pass	Fail

Project Address	Builder Name
Builder Contact Telephone	Plan Number
HERS Rater Telephone	Sample Group Number
Certifying Signature Date	Sample House Number
Firm	HERS Provider
Street Address:	City/State/Zip:

Copies to: **BUILDER, HERS PROVIDER AND BUILDING DEPARTMENT**

HERS RATER COMPLIANCE STATEMENT

The house was: ✓ ☐ Tested ✓ ☐ Approved as part of sample testing, but was not tested

As the HERS rater providing diagnostic testing and field verification, I certify that the house identified on this form complies with the diagnostic tested compliance requirements as checked on this form.

✓ ☐ The installer has provided a copy of CF-6R (Installation Certificate).

✓ ☐ FAN WATT DRAW

Procedures for measuring the air handler watt draw are available in RACM, Appendix RE3.2.

✓ **Method For Fan Watt Draw Measurement**					
☐	RE3.2.1	Portable Watt Meter Measurement			
☐	RE3.2.2	Utility Revenue Meter Measurement			
Measured Fan watt Draw: (enter watts here)					Watts
Measured Fan Flow (Enter total cfm from airflow verification)					cfm
		Enter results of Watts/cfm:			Watts/cfm
			✓	✓	
✓ ☐ Yes	☐ No	Calculated fan watt/cfm is equal to or lower than the fan watt/cfm draw documented in CF-1R	☐	☐	
		Yes is a pass	Pass	Fail	

HERS RATER COMPLIANCE STATEMENT

The house was: ✓ ☐ Tested ✓ ☐ Approved as part of sample testing, but was not tested

As the HERS rater providing diagnostic testing and field verification, I certify that the house identified on this form complies with the diagnostic tested compliance requirements as checked on this form.

✓ ☐ The installer has provided a copy of CF-6R (Installation Certificate).

✓ ☐ MINIMUM REQUIREMENTS FOR INFILTRATION REDUCTION COMPLIANCE CREDIT

Procedures for field verification and diagnostic testing of infiltration reduction are available in RACM Section 3.5.

Diagnostic Testing Results

	✓	✓	Building Envelope Leakage (CFM @ 50 Pa) as measured by Rater:		
1.	☐ Yes	☐ No	Is measured envelope leakage less than or equal to the required level from CF-1R?		
2.	☐ Yes	☐ No	Is Mechanical Ventilation shown as required on the CF-1R?		
2a.	☐ Yes	☐ No	If Mechanical Ventilation is required on the CF-1R (Yes in line 2), has it been installed?		
2b.	☐ Yes	☐ No	Check this box yes if mechanical ventilation is required (Yes in line 2) and ventilation fan watts are no greater than shown on CF-1R.		
3.	☐ Yes	☐ No	Check this box yes if measured building infiltration (CFM @ 50 Pa) is greater than the CFM @ 50 values shown for an SLA of 1.5 on CF-1R (If this box is checked no, mechanical ventilation is required.)		
4.	☐ Yes	☐ No	Check this box yes if measured building infiltration (CFM @ 50 Pa) is less than the CFM @ 50 values shown for an SLA of 1.5 on CF-1R, mechanical ventilation is installed and house pressure is greater than minus 5 Pascal with all exhaust fans operating.	✓	✓
Pass if: a) Yes in line 1 and line 3, or b) Yes in line 1 and line2, 2a, and 2b, or c) Yes in line 1 and line 4, Otherwise Fail.				☐ Pass	☐ Fail

Project Address	Builder Name
Builder Contact Telephone	Plan Number
HERS Rater Telephone	Sample Group Number
Certifying Signature Date	Sample House Number
Firm	HERS Provider
Street Address:	City/State/Zip:

Copies to: **BUILDER, HERS PROVIDER AND BUILDING DEPARTMENT**

HERS RATER COMPLIANCE STATEMENT

The house was: ✓ ☐ Tested ✓ ☐ Approved as part of sample testing, but was not tested

As the HERS rater providing diagnostic testing and field verification, I certify that the house identified on this form complies with all applicable requirements of the "High Quality Installation of Insulation" protocols as specified in the Residential ACM, Appendix RH and as checked on this form. Note that to PASS and receive compliance credit, NONE of the BOXES below may be checked "No" and the first three boxes also must be checked. Check "NA" only if the item is not part of the design of the building (i.e., single story buildings do not have rim joists or there may be no recessed can lights installed, etc.).

✓ ☐ **REQUIREMENTS FOR "HIGH QUALITY INSTALLATION OF INSULATION" COMPLIANCE CREDIT**

- ✓ ☐ The building is wood frame construction with wall stud cavities, ceilings, and roof assemblies insulated with mineral fiber or cellulose insulation in low-rise residential buildings.
- ✓ ☐ Description of insulation, (CF-6R, formerly IC-1) signed by the installer stating: insulation manufacturer's name, material identification, installed R-values, and for loose-fill insulation: minimum weight per square foot and minimum inches.
- ✓ ☐ Installation Certificate, (CF-6R) signed by the installer certifying that the installation meets all applicable requirements as specified in the High Quality Insulation Installation Procedures (ACM, Appendix RH).

✓ **FLOOR**

☐ Yes	☐ No	☐ NA	All floor joist cavity insulation installed to uniformly fit the cavity side-to-side and end-to-end
☐ Yes	☐ No	☐ NA	Insulation in contact with the subfloor or rim joists insulated
☐ Yes	☐ No	☐ NA	Insulation properly supported to avoid gaps, voids, and compression
✓ **WALLS**			
☐ Yes	☐ No	☐ NA	Wall stud cavity insulation uniformly fills the cavity side-to-side, top-to-bottom, and front-to-back
☐ Yes	☐ No	☐ NA	No gaps
☐ Yes	☐ No	☐ NA	No voids over ¾" deep or more than 10% of the batt surface area.
☐ Yes	☐ No	☐ NA	Hard to access wall stud cavities such as; corner channels, wall intersections, and behind tub/shower enclosures insulated to proper R-Value
☐ Yes	☐ No	☐ NA	Small spaces filled
☐ Yes	☐ No	☐ NA	Rim-joists insulated
☐ Yes	☐ No	☐ NA	Wall stud cavities caulked or foamed to provide an air tight envelope

Project Address	Builders Name

ROOF/CEILING PREPARATION			
☐ Yes	☐ No	☐ NA	All draft stops in place to form a continuous ceiling and wall air barrier
☐ Yes	☐ No	☐ NA	All drops covered with hard covers
☐ Yes	☐ No	☐ NA	All draft stops and hard covers caulked or foamed to provide an air tight envelope
☐ Yes	☐ No	☐ NA	All recessed light fixtures IC and air tight (AT) rated and sealed with a gasket or caulk between the housing and the ceiling
☐ Yes	☐ No	☐ NA	Floor cavities on multiple-story buildings have air tight draft stops to all adjoining attics
☐ Yes	☐ No	☐ NA	Eave vents prepared for blown insulation - maintain net free-ventilation area
☐ Yes	☐ No	☐ NA	Knee walls insulated or prepared for blown insulation
☐ Yes	☐ No	☐ NA	Area under equipment platforms and cat-walks insulated or accessible for blown insulation
☐ Yes	☐ No	☐ NA	Attic rulers installed

✓ **ROOF/Ceiling Batts**

☐ Yes	☐ No	☐ NA	No gaps
☐ Yes	☐ No	☐ NA	No voids over ¾ in. deep or more than 10% of the batt surface area
☐ Yes	☐ No	☐ NA	Insulation in contact with the air-barrier
☐ Yes	☐ No	☐ NA	Recessed light fixtures covered
☐ Yes	☐ No	☐ NA	Net free-ventilation area maintained at eave vents

✓ **ROOF/Ceiling LOOSE-FILL**

☐ Yes	☐ No	☐ NA	Insulation uniformly covers the entire ceiling (or roof) area from the outside of all exterior walls
☐ Yes	☐ No	☐ NA	Baffles installed at eaves vents or soffit vents - maintain net free-ventilation area of eave vent
☐ Yes	☐ No	☐ NA	Attic access insulated
☐ Yes	☐ No	☐ NA	Recessed light fixtures covered
☐ Yes	☐ No	☐ NA	Insulation at proper depth – insulation rulers visible and indicating proper depth and R-value
☐ Yes	☐ No	☐ NA	Loose-fill mineral fiber insulation meets or exceeds manufacturer's minimum weight and thickness requirement for the target R-value. Target R-value _____ Manufacturer's minimum required weight for the target R-value _____ (pounds-per-square foot). Sample weight _____ (pounds per square foot).
☐ Yes	☐ No	☐ NA	Manufacturer's minimum required thickness at time of installation _____ (inches) Manufacturer's minimum required settled thickness _____ (inches). Number of days since loose-fill insulation was installed _____ (days). At the time of installation, the insulation shall be greater than or equal to the manufacturer's minimum initial insulation thickness. If the HERS rater does not verify the insulation at the time of installation, and if the loose-fill insulation has been in place less than seven days the thickness shall be greater than the manufacturer's minimum required thickness at the time of installation less 1/2 inch to account for settling. If the insulation has been in place for seven days or longer the insulation thickness shall be greater than or equal to the manufacturer's minimum required settled thickness. Minimum thickness measured (inches).

ComfortWise℠

Quality Installation of Insulation: Contractor Scope of Work

Introduction

The purpose of envelope insulation is to provide a continuous thermal barrier to minimize heat flow through the walls, ceiling and floor. Insulation serves to keep a home comfortable and reduce costs for heating and cooling. The home will not be as comfortable and energy costs will be increased if insufficient insulation is installed, or it is installed incorrectly, such as being compressed or installed with gaps. Furthermore, it is not difficult to install insulation correctly.

Recent studies have found that over a third of new homes have lower levels of insulation installed than specified and an additional fifth have serious installation problems that will result in significantly decreased effectiveness of the insulation. In addition, virtually all of the homes studied were found to have numerous insulation installation defects that reduce the performance of the insulation well below its rated R-value. All of these problems can lead to defect litigation. These cost-effective procedures will improve comfort, reduce energy use, and reduce potential defect liability exposure.

The purpose of this document is to provide the tools to ensure insulation is properly specified and installed, resulting in a comfortable, energy-efficient home.

Builder: Include these materials in your bidding and contracting documents. It is meant to form the basis of a scope of work for both bidding and contracting. Its use will help ensure consistent bids and quality installations. The Scope of Work is to be followed by the insulation contractors, and the Insulation Checklist should be used to verify installation quality. The site superintendent should also complete the Insulation Checklist.

Contractor: Follow Scope of Work; use the Insulation Checklist to check installation quality.

Field Superintendent: Complete Insulation Checklist to check installation quality and send completed copy to the project manager or general superintendent.

Criteria for a Quality Thermal Envelope

Insulation should:

1. Provide a continuous barrier between the inside conditioned space and the outside,
2. Be installed to the proper R-value,
3. Be installed without gaps,
4. Avoid excessive compression,
5. Be properly labeled or be proper depth to indicate proper R-value.

Procedures to Install Insulation for a Quality Thermal Envelope

The following steps should be followed in the installation of insulation to ensure efficiency and comfort (for details, see accompanying Scope of Work):

1. Work with the architect and framer to minimize spaces that are difficult to insulate.
2. Use materials that meet California quality standards.
3. Install R-values that meet or exceed design specifications.
4. Install insulation to completely fill all cavities without gaps and with minimal compression.
5. Account for special characteristics of the materials used, such as settling, flammability, or water permeability.
6. Inspect the final job using the Insulation Checklist to ensure a quality installation.

Scope of Work:
INSULATION INSTALLATION PROCEDURES

WALL INSULATION
Unfaced batt installation; batts shall be:

- correctly sized to fit snugly at the sides and ends
- installed to completely fill the cavity
- cut to fit properly – there should be no gaps, nor should the insulation be doubled-over or compressed
- non-standard-width cavities shall be filled by batt insulation cut approximately one inch (1") wider than the space to be filled.
- cut to butt-fit around wiring and plumbing, or be split (de-laminated) so that one layer can fit behind the wiring or plumbing and one layer fit in front

Faced batt installation, where used as a vapor barrier: additional instructions:

- facing should be placed toward living spaces
- faced insulation must be properly stapled over the face of the studs; it must be continuous with no penetrations
- stapling: the batt flange should be stapled to the face of the framing; flanges from adjacent cavities should overlap per manufacturers specifications on facing
- each batt should be stapled approximately every eight (8) inches, or according to manufacturers specifications on facing
- all tears or breaks in the facing six (6) inches or longer shall be sealed with duct tape or other waterproof tape. Tears and breaks in the facing should be minimal.

Narrow-framed cavities and "chinking:"

- non-standard-width cavities shall be filled by batt insulation cut approximately one inch (1") wider than the space to be filled.
- narrow spaces (2" or less) at windows, between studs at the building's corners, and at the intersections of partitions and walls shall be filled with small pieces of insulation; care should be taken not to compress the insulation

Special situations:
Installations prior to exterior sheathing or lath

- all exterior channels (e.g., at wall junctions and corners) must be filled with insulation
- all exterior walls adjacent to tubs and showers must be filled with insulation

Obstructions

- insulation shall be cut to fit around wiring and plumbing without compression
- insulation shall be placed between the sheathing and the rear of electrical boxes
- insulation shall be cut to fit around junction boxes
- in cold climates water pipes shall have at least two thirds of the insulation between the water pipe and the outside. If the pipe is near the outside, as much insulation as possible shall be placed behind the pipe and no insulation shall be placed between the pipe and the inside.

Rim joists

- all rim joists shall be insulated to the same R-value as the walls
- as necessary, insulation shall be cut to fit into the rim joist
- an alternative to fitting insulation in a web truss located at the rim joist is to completely cover the truss with insulation, snug to the upper and lower floors

Knee walls and Skylight shafts with framing that will support insulation

- all knee walls and skylight shafts shall be insulated to a minimum of R-19.
- the insulation shall be installed without gaps and with minimal compression
- for steel-framed knee-walls and skylight shafts, external surfaces of steel studs must be covered with batts or rigid foam unless otherwise specified on the CF-1R and documented by a form 3R generated by EZFRAME

Knee walls and Skylight shafts without framing that will support insulation

- for steel-framed knee-walls and skylight shafts, external surfaces of steel studs must be covered with batts or rigid foam unless otherwise specified on the CF-1R and documented by a form 3R generated by EZFRAME
- the house side of the insulation shall be in contact with the drywall or other wall finish. The attic side shall be covered with, and supported by a facing rated for attic exposure to stop air intrusion into the insulation.

HVAC/Plumbing closet

- insulate all walls of interior closets for HVAC and/or water heating equipment the same R-value as the exterior walls

BATT CEILING INSULATION

Unfaced batt installation:

- batts shall be correctly sized to fit snugly at the sides and ends
- batts should fill the cavity
- where necessary, batts shall be cut to fit properly – there should be no gaps, nor should the insulation be doubled-over or compressed. When batts are cut to fit a non-standard cavity, they should be cut to be one inch (1") wider than the cavity.
- batts should be cut to butt-fit around wiring and plumbing, or be split (de-laminated) so that one layer can fit behind the wiring or plumbing and one layer fit in front
- for batts that are taller than the trusses, full-width batts should be used so that they expand to touch each other over the trusses
- the insulation must cover the wall top plates
- hard covers or draft stops should be placed over all deep drops and interior wall cavities to keep insulation in place and stop air movement. If hard covers or draft stops are missing or incomplete, they should be completed before insulation is completed.
- required ventilation must be maintained: for eaves or soffit vents, one-inch (1") of unblocked free air space between the roof sheathing and the insulation is required.
- where necessary, use baffles to keep the insulation from blocking the passage of air
- insulation shall cover all IC rated lighting fixtures
- fixtures that are not IC rated (e.g., halogen lamps, heat lamps) need to be enclosed in an airtight box that meets fire codes, and the box covered with insulation. If fixtures are not IC rated and not enclosed in such a box, they should be replaced or boxed before insulation is completed.

Faced batt installation, where used as a vapor barrier: additional instructions:

- facing should be placed toward living spaces
- stapling: the batt flange is stapled to the face of the framing; flanges from adjacent cavities should overlap
- each batt should be stapled approximately every eight inches (8") or per manufacturer's specifications on the facing
- all tears or breaks in the facing six inches (6") or longer shall be sealed with appropriate tape approved by the insulation manufacturer. Tears and breaks in the facing should be minimal.

Special situations:

Insulation at bridging (cross bracing)

- batts shall be split lengthwise at the center and packed half into the lower opening and half into the upper opening of bridging (cross bracing) of ceiling and/or floor joists
- alternatively, insulation is butted to the bridging and the space is filled with scrap insulation

Rafter ceilings

- an inch of air space should be maintained between the insulation and roof sheathing, if necessary to meet local codes
- facings and insulation should be kept three inches (3") away from heated flue pipes or chimneys; follow flue manufacturer's recommendations

HVAC platform

- verify that appropriate batt insulation is placed below any plywood platform or walks for HVAC equipment installation and access

Attic access

- permanently attach rigid foam or a batt of insulation to the access cover using adhesive or mechanical fastener

BLOWN-IN CEILING INSULATION

- baffles must be placed at eaves or soffit vents to keep insulation from blocking attic ventilation; required ventilation must be maintained: for eaves or soffit vents, one-inch (1") of unblocked free air space between the roof sheathing and the insulation is required.
- hard covers or draft stops must be placed over all deep drops and interior wall cavities to keep insulation in place and stop air movement. If hard covers or draft stops are missing or incomplete, they should be completed before insulation is completed.
- small, inaccessible openings shall be hand packed with pieces of batt insulation
- attic rulers appropriate to the material installed must be placed around attic to verify depth: 1 ruler for every 250 square feet, evenly distributed around the attic and clearly readable from the attic access
- insulation shall be blown to a uniform thickness throughout the attic, with no high or low spots
- labels from the insulation bags should be cut out and stapled to a truss vertical near the attic opening
- insulation must go underneath and on both sides of obstructions such as cross-bracing and wiring
- insulation shall be applied all the way to the outer edge of the wall top plate
- insulation shall cover IC rated lighting fixtures
- fixtures that are not IC rated (e.g., heat lamps) need to be enclosed in a drywall box and the box covered with insulation. If fixtures are not IC rated and not enclosed in a drywall box, they should be replaced or boxed before insulation is completed.
- there shall be no excessive compression of insulation material
- clearances around fossil-fuel appliances and heat-exhaust vents shall follow local fire protection codes
- no insulation or facing shall be placed in air spaces surrounding metal chimneys or fireplaces; follow manufacturer's recommendations
- batt or rigid foam insulation shall be installed in areas where blown-in insulation has not been applied, such as access panels and doors

Special situations:

HVAC platform

- pressure-fill the areas under any plywood platform or walks for HVAC equipment installation and access or verify that appropriate batt insulation has been installed

Attic access

- permanently attach rigid foam or a batt of insulation that is equal or exceeds the R-value of the insulation on the attic floor to the access cover using adhesive or mechanical fastener

RAISED FLOORS AND FLOORS OVER GARAGES

- batts must be correctly sized to fit snugly at the sides and ends, but not be so large as to buckle – batts should be no more than one inch (1") wider than the cavity
- batts must be cut to fit properly – there should be no gaps, nor should the insulation be doubled-over or compressed
- batts should fill the cavity
- batts should be cut to butt-fit around wiring and plumbing, or be split (de-laminated) so that one layer can fit behind the wiring or plumbing and one layer fit in front
- where there is an air space between the insulation and flooring, the headers and band-joists must be insulated
- if faced, facing should be placed toward living spaces

MATERIALS SHALL:

- comply with Uniform Building Code (including but not limited to 1997 UBC Section 707) and installed to meet all applicable fire codes
- meet CA Quality Standards for Insulating Material, Title 24, Chapter 4, Article 3 listed in the California Department of Consumer Affairs Consumer Guide and Directory of Certified Insulating Materials
- comply with flame spread rating and smoke density requirements of Sections 2602 and 707 of the Title 24, Part 2: All exposed installations must use fire retardant facings which have been tested and certified not to exceed a flame spread of 25 and a smoke development rating of 450. Insulation facings that do not touch a ceiling, wall, or floor surface and faced batts on the undersides of roofs with an air space between the ceiling and facing are considered exposed applications.
- be installed according to manufacturer specifications and instructions

R-VALUE AND U-VALUE SPECIFICATIONS: See CF-1R for minimum requirements; for non-standard assemblies, also see applicable form 3R.

CERTIFICATES: A Insulation Certificate (IC-1) signed by the responsible party shall be provided that states that the installation is consistent with the plans and specifications for which the building permit was issued. The certificate shall also state the installing company name, insulation manufacturer's name and material identification, the installed R-value, and, in applications of blown-in insulation, the minimum installed weight-per-square-foot consistent with the manufacturer's labeled installed-design-density for the desired R-value.

INSULATION INSPECTION CHECKLIST

- ☐ Insulation Certificate, signed by responsible party stating:
  - Manufacturer's name
  - Installed R-values for Walls, Ceiling and Floors
  - For Blown-in insulation: minimum weight per square foot

Walls

- ☐ No gaps
- ☐ No compression
- ☐ Insulation cut around obstructions
- ☐ Stapling correct: no gaps, cavity filled
- ☐ External channels, corners, and areas around tubs and showers insulated
- ☐ Small spaces filled
- ☐ Rim-joists insulated

Ceiling Batts

- ☐ No gaps
- ☐ No compression
- ☐ Insulation cut around obstructions
- ☐ All draft stops in place
- ☐ Batts cover trusses
- ☐ All top plates covered
- ☐ All venting clear: minimum 1" clearance
- ☐ IC rated fixtures covered
- ☐ Attic access insulated

Ceiling Blown-in

- ☐ All draft stops in place
- ☐ All drops covered with hard covers
- ☐ Insulation covers entire surface
- ☐ Insulation uniform depth
- ☐ Insulation at proper depth – insulation rulers visible and indicating proper depth
  Note: cellulose insulation settles. Nominal settling for loose fill cellulose is 20% and for stabilized 5%; installers should either over-blow by these percentages or to manufacturer's specifications
- ☐ Insulation covering cavities, drops, scuttles, bracing, and IC rated fixtures
- ☐ Insulation covering top plates
- ☐ Baffles installed and eaves vents or soffit vents clear: minimum 1" clearance
- ☐ Bag labels cut out and stapled to truss vertical near attic access
- ☐ Attic access insulated

Floor

- ☐ Batts snug but not compressed or buckled
- ☐ All spaces insulated
- ☐ If web trusses, rim joists insulated

Installation Scope of Work and Procedures

Quality Caulking and Sealing (Air Sealing)

Introduction

Airflow through cracks and holes in the walls, ceiling and floor is referred to as air infiltration. Air infiltration is minimized by caulking and sealing the envelope, usually performed by the insulation contractor. A home that is not sealed for air infiltration will be uncomfortable due to drafts and will use about 30% more energy than a relatively airtight home. Controlling air infiltration is one of the most cost-effective energy-efficiency measures in modern construction practices. In addition, good caulking and sealing will reduce dust and dirt that can enter homes through cracks and holes. Caulking and sealing is also one of the simplest energy-efficiency measures to install.

How to use this Scope of Work

The purpose of this document is to provide the tools to ensure caulking and sealing is properly specified and installed, resulting in a comfortable, energy-efficient home.

Builder: Include these materials in your bidding and contracting documents. It is meant to form the basis of a scope of work for both bidding and contracting. Its use will help ensure consistent bids and quality installations. Caulking and Sealing Procedures are to be followed by the insulation contractors.

Contractor: Follow Caulking and Sealing Procedures.

Field Superintendent: Review Caulking and Sealing Procedures to check installation quality.

Criteria for a Quality Envelope

Caulking and Sealing should:

1. Seal gaps and holes between the inside conditioned space and outside
2. Be installed without gaps or large excesses
3. Be installed carefully around sliding glass doors and vinyl windows
4. Specific Leakage Area (SLA) should be between 1.5 and 3.8 when measured with a Blower Door

Procedures to Caulk and Seal for a Quality Envelope

The following steps should be followed in the installation of insulation to ensure efficiency and comfort (details follow:)

1. Work with the architect and framer to minimize air-sealing problems
2. Seal soleplate to floor
3. Seal all exterior wall penetrations
4. Seal all top-plate penetrations
5. Weather-strip all operable openings to the exterior; including doors and attic access holes

Caulking and Sealing Procedures

Seal sole plates

- Materials: compressible sealant, caulk, foam, or mastic
- Produce continuous bead or layer of sealant
- Where not certain that continuous bead or layer will be achieved, combine two techniques, e.g., rope caulk under sill followed by penetrating foam after wall is erect

Seal exterior penetrations

- Materials: foam, caulk or gasket
- Example openings: plumbing, gas lines, electrical boxes, and outlets
- Seal large gaps around windows between house framing and window frame – use special care on large sliding-glass doors and vinyl-framed windows: do not use expansive foam on these.

Note: Install caulking and sealing with care to seal all joints without excess sealant. Excess is wasted and must be removed before installing drywall. Care must be exercised during removal of excess sealant after hardening to avoid damage or removal of the required sealant.

Seal top plate penetrations

- Materials: foam or caulk
- Example openings: plumbing, electrical, cable, security

Weather-strip exterior doors and other openings to the exterior

- Weather-strip around all doors
- Weather-strip around attic access

HVAC/Plumbing closet inside conditioned space

- Seal wall penetrations of interior closets for HVAC and/or water heating equipment
- Weather-strip access door(s)

Raised floors

- Seal around tub and shower drains

Windows

- Windows must be certified by the manufacturer to limit air leakage to less than 0.37cfm per operable foot of sash crack
- Windows should be installed to avoid both air leakage and water penetration – see separate procedures for proper installation of windows

Test

- To determine actual air-tightness, a Blower Door test needs to be performed

ComfortWise℠

Standard Practice For Installation of Windows With Integral Mounting Flange in Wood Frame Construction

This practice has been approved as an industry standard by the California Association of Window Manufacturers (CAWM) Technical Committee and by general membership ballot as of June 26, 1995.

1. Scope

1.1 This practice covers the installation of windows in residential buildings of no more than four (4) stories in height.

1.2 This practice applies to metal and non-metal framed windows when an integral mounting flange is employed for installation.

1.3 This practice covers the installation process from pre-installation procedures through post-installation procedures. It does not cover the fabrication or assembly of units whether such fabrication takes place in a factory or at the intended installation site.

1.4 This practice covers aspects of installation relating to the effectiveness and durability in service. It does not cover aspects relating to the safety of the person installing the units.

1.5 This practice provides minimum requirements that will help to ensure the installation of windows in an effective manner. Actual conditions in buildings vary greatly, and in some cases substantial additional care and precaution will have to be taken.

1.6 This practice does not purport to address all of the safety problems associated with its use. It is the responsibility of whomever uses this standard to consult and establish appropriate safety and health practices and determine the applicability of regulatory limitations prior to use.

2. Referenced Documents

2.1 ASTM:

B 633 "Standard Specification for Electrodeposited Coatings of Zinc on Iron and Steel"

B 766 "Standard Specification for Electrodeposited Coatings of Cadmium on Steel"

B 456 "Standard Specification for Electrodeposited Coatings of Copper plus Nickel plus Chromium and Nickel plus Chromium"

C 755 "Practice for Selection of Vapor Retarder for Thermal Insulation"

D 779 "Standard Test Method of Water Resistance of Paper, Paperboard, and Other Sheet Materials by the Dry Indicator Method"

2.2 AAMA 800 "Voluntary Specifications and Test Methods for Sealants"

3. Definitions

3.1 ***Galvanic Corrosion*** - A form of deterioration of metal resulting from the electrochemical reaction that occurs when certain dissimilar metals are in contact in the presence of moisture.

3.2 ***Residential Building*** - Any building used or intended primarily for a single or multiple family dwelling.

3.3 ***Mounting Flange*** - A fin projecting from the window frame parallel to the plane of the wall for the purpose of securing the frame to the structure.

4. Significance and Use

4.1 This practice recognizes that effectiveness and durability of installed units depend not only on the choice and quality of materials, design, adequacy of assembly, and support system, but also on their proper and workmanlike installation.

4.2 Improper installation of units may reduce their effectiveness, lead to excessive air, water and sound leakage, condensation, and may promote the deterioration of wall constructions, windows, doors, and their respective finishes. Additionally, improper installation of metal units may result in accelerated corrosion of metal frames, trim, anchors, fasteners, and finishes.

4.3 The application of this practice also requires a working knowledge of applicable Federal, State, and local codes and regulations, specifically, but not limited to required means of egress and requirements for safety glazing. Consult with local building codes prior to installation.

4.4 The application of this practice also requires a working knowledge of the tools, equipment, and methods necessary for the installation of windows. It further assumes familiarity with caulking and sealing and with

glass handling procedures, painting where applicable, and an understanding of the fundamentals of residential construction that affect the installation of these units.

5. Procedure

5.1 ***Framing Requirements*** - The rough framed opening to receive the window shall be sufficiently larger in width and height than the actual frame dimensions of the window. To assure adequate clearance, the framer shall consult the manufacturer's literature for the recommended rough opening dimensions. The framing shall be plumb, square and level. (See Figure 1)

5.2 ***Protection from Dissimilar Materials***

5.2.1 Aluminum products shall be isolated from dissimilar or corrosive materials with a nonconductive coating or sealant material.

5.2.2 All fasteners shall be corrosive resistant, in accordance with ASTM B 633, B 766, or B 456.

5.3 ***Flashing Requirements*** - Proper flashing and/or sealing is necessary as a secondary barrier to prevent water from entering the wall between the window frame and the adjacent wall materials. Flashing and/or an appropriate method of sealing shall be designed as a part of an overall weather-resistive barrier system. It is **not** the responsibility of the window manufacturer to design or recommend a flashing system appropriate to each job condition.

Note 1 - The responsibility for protecting any flashing material from damage caused by weather, other trades, or vandalism, and properly integrating the flashing system into the weather-resistive barrier for the entire building, will be the responsibility of the general contractor or his designated agent.

5.3.1 ***Penetration Flashing Material*** - Flashing material shall be barrier coated reinforced and shall provide four (4) hour minimum protection from water penetration when tested in accordance with ASTM D-779. Flashing material shall carry continuous identification.

5.4 ***Application***

5.4.1 One of the two following methods shall be selected as the application to be followed. Once a method is selected, all procedures of that method must be performed in the described sequence. Substitution of a procedure from one method to the other is not permitted.

5.4.1.1 ***Method A***

5.4.1.1.1 A strip of approved flashing material should be at least nine inches wide. Flashing shall be applied in a weatherboard fashion around the full perimeter of the opening.

5.4.1.1.2 Apply the first strip horizontally immediately below the sill, cut it sufficiently long to extend past each side of the window, so that it projects beyond the vertical flashing to be applied later. (See Figure 2)

5.4.1.1.3 Fasten the top edge of the sill flashing to the framing, but do not fasten the lower edge, so the weather resistant building paper applied later may be slipped up and underneath the flashing in weatherboard fashion. (See Figure 2)

5.4.1.1.4 Apply a continuous seal to the backside (interior) of the sill mounting flange, (see Figure 3a). The window shall then be installed in accordance with Section 5.5 installation procedures.

5.4.1.1.5 Next, apply a continuous seal to the exposed mounting flange at the top (head) and sides (jambs) of the installed window. For mechanically joined frames, apply seal at corners the full length of the seam where mounting flanges meet. (See Figure 4a)

5.4.1.1.6 Starting at each jamb, embed the jamb flashing into the seal and fasten in place. Run this flashing beyond the sill flashing and above where the head flashing will intersect. (See Figure 4a)

5.4.1.1.7 Finally, embed the flashing into the sealant on the mounting flange at the window head. Cut this flashing sufficiently long so that it will extend beyond each jamb flashing. Fasten in place. (See Figure 5)

5.4.1.2 ***Method B***

5.4.1.2.1 A strip of approved flashing material should be at least nine inches wide. Flashing shall be applied in a weatherboard fashion around the full perimeter of the opening.

5.4.1.2.2 Apply the first strip horizontally immediately below the sill, cut it sufficiently long to extend past each side of the window, so that it projects beyond the vertical flashing to be applied later. (See Figure 2)

5.4.1.2.3 Fasten the top edge of the sill flashing to the framing, but do not fasten the lower edge, so the weather resistant building paper applied later may be slipped up and underneath the flashing in weatherboard fashion. (See Figure 2)

5.4.1.2.4 Next, fasten strips of flashing at each vertical edge (jamb) of the opening. Run this flashing beyond the sill flashing and above where the head flashing will intersect. (See Figure 3b)

5.4.1.2.5 Apply a continuous seal to the backside (interior) of the mounting flange near the outer edge or a continuous seal to the perimeter of the opening at a point to assure contact with the backside (interior) of the mounting flange. (See Figure 4b)

NOTE 2 - Caution must be taken to avoid disrupting the continuous seal.

5.4.1.2.6 The window shall then be installed in accordance with Section 5.5 installation procedures.

5.4.1.2.7 For mechanically joined frames, apply seal at corners the full length of the seam where mounting flanges meet.

5.4.1.2.8 Next, apply a continuous seal at the top (head) mounting flange and embed the bottom of the head flashing over the sealant and the mounting flange. Cut this flashing sufficiently long so that it will extend beyond each jamb flashing. Fasten in place. (See Figure 5)

5.5 ***Installation***

5.5.1 Depending on the size and weight of the window, shim blocks may be required under the sill to maintain straight and level condition and to prevent rotation. Consult manufacturer's recommendations.

5.5.2 Shim and adjust the window as necessary to achieve a plumb, square and level condition, as well as an even reveal around the frame opening, securing it the full perimeter with the equivalent of 6d fasteners on a maximum 16-inch centers. Hinged and pivoted windows may require additional fasteners located near the hinge or pivot points. For certain windows it may be appropriate to fasten the head in a manner to allow for possible deflection.

5.5.3 In each direction from all corners there must be a fastener within 10 inches, but no closer than 3 inches, to prevent frame distortion or fracture of joint seals.

5.5.4 In all cases consult manufacturer's instructions for any special procedures or applications.

NOTE 3 - If any damage to window frame joint seals is observed during installation, it must be repaired by the installer.

5.5.5 Where weather-resistant building paper, insulating board, or other materials *by other trades* may constitute the primary weather barrier behind the exterior wall finish (i.e. stucco, masonry, siding, etc.), Owner/General Contractor is responsible to ensure that the weather barrier is continuous by effectively sealing the material to the window frame. (See Figure 6)

5.6 ***Sealant Requirements***

5.6.1 Sealing/caulking required between the window and the flashing can be accomplished with caulking conforming to AAMA 800, or use sealant recommended and approved by the sealant manufacturer.

5.6.2 Some exterior wall finishes require additional sealing between the perimeter of the window frame and adjacent finish wall material. Owner/General Contractor is responsible for identifying the need for any additional sealant which will be applied *by others*. Such sealant shall be elastomeric material, compatible with window framing and adjacent wall materials. (See Figure 6)

5.7 ***Finish And Sealant Protection***

5.7.1 Caution shall be used to avoid damage to windows during and after installation. Prior to installation, store windows in a near vertical position in a clean area, free of circulating dirt or debris and protected from exposure to weather elements.

5.7.2 Field-applied protective coatings can damage window sealants and gaskets and are not recommended. Contact the window manufacturer before applying any such coatings.

5.7.3 Masking tapes shall not be used on window surfaces as they may cause damage when they are removed.

5.7.4 Stucco or concrete left to cure on frames and glass will damage these surfaces. Remove and clean all such materials from surfaces before any curing action takes place.

5.7.5 Glass and frame surfaces exposed to leaching water from new concrete or stucco must be rinsed immediately with clear water to prevent permanent damage.

Fig. 4a. Jamb Flashing (Method 'A')

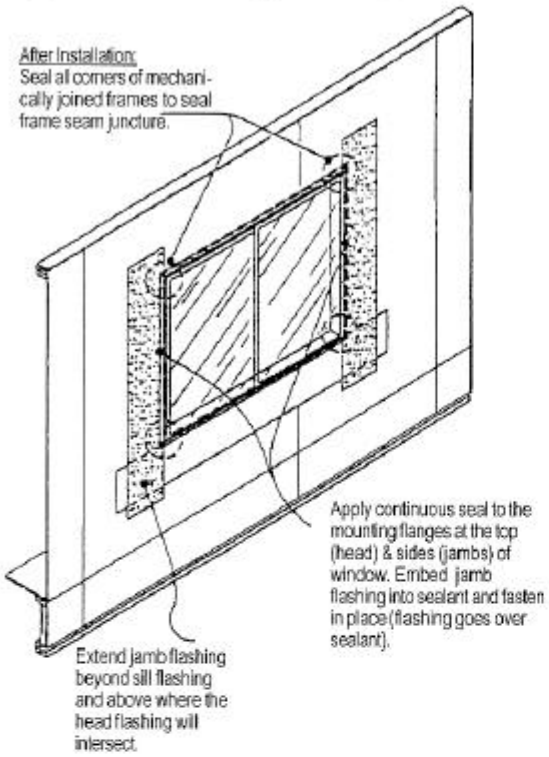

Fig. 4b. Window Installation (Method 'B')

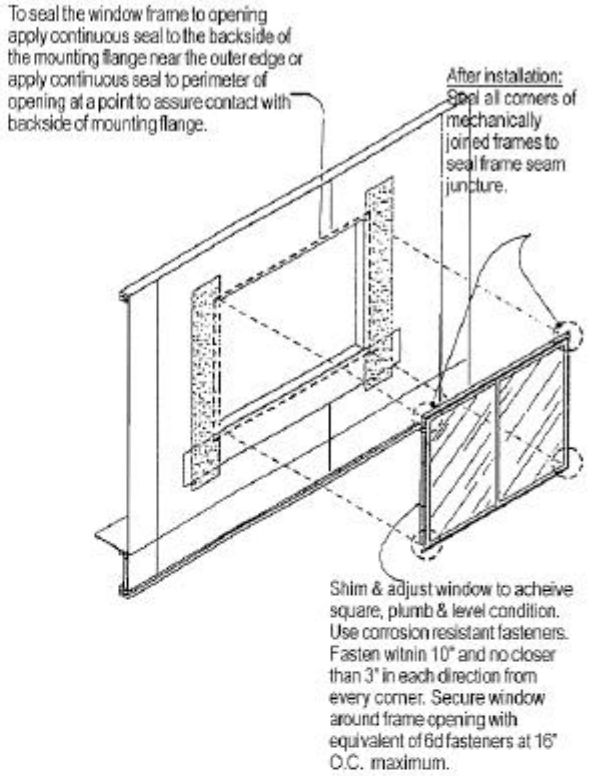

Fig. 5. Head Flashing

Method A
Embed bottom of the head flashing against the previously applied sealant. (Flashing goes over sealant.) Extend head flashing beyond each jamb flashing. Fasten in place.
Method B
Apply continuous seal along top (head) mounting flange. Embed bottom of head flashing against sealant (flashing goes over sealant), extend head flashing beyond each jamb flashing. Fasten in place.

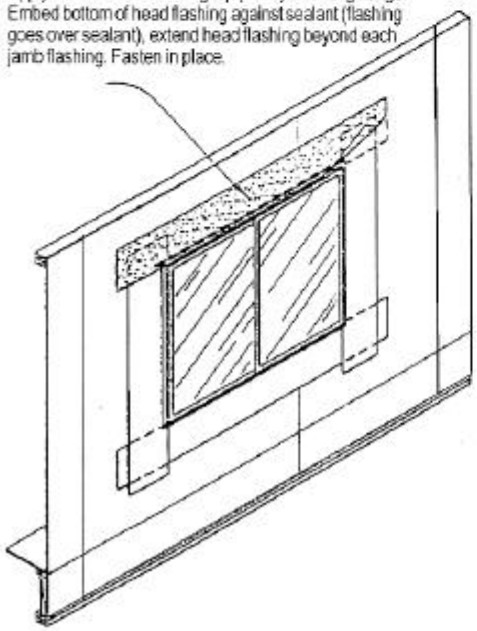

Fig. 6. Primary Weather Barrier Application by Others

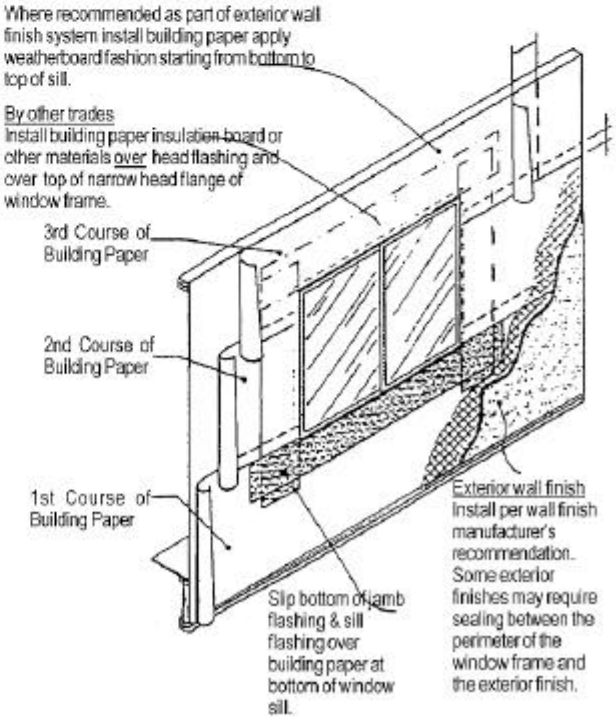

ComfortWise℠

PROCEDURES FOR HVAC SYSTEM DESIGN AND INSTALLATION

The goal for a HVAC system is to provide proper air flow, heating, and cooling to each room. This page sets out key criteria that describe a quality system, and key design and installation considerations that should be met to achieve this goal. The pages following contain more detailed information on design, fabrication, installation, and performance testing.

Criteria for a Quality HVAC System

An HVAC system should:

1. Be properly sized to provide correct air flow, and meet room-by-room calculated heating and cooling loads;
2. Be installed so that the static air pressure drop across the handler is within manufacturer and design specifications;
3. Have sealed supply ductwork that will provide proper air flow;
4. Be installed with a return system sized to provide correct return air flow;
5. Have sealed return ductwork that will provide proper air flow to the fan, and avoid air entering the HVAC system from polluted zones (e.g., fumes from autos and stored chemicals, and attic particulates);
6. Have balanced air flows between supply and return systems to maintain neutral pressure in the home;
7. Minimize duct air temperature gain or loss between the air handler and room registers, and between return registers and the air handler;
8. Be properly charged with refrigerant;
9. Have proper burner operation and proper draft.

Procedures to Design and Install an Air Distribution System

The following steps should be followed in the design and installation of the HVAC system to ensure efficiency and comfort (for details, see Appendix 1):

1. Determine room-by-room loads and air-flows using ACCA Manual J calculation procedures (or substantially equivalent);
2. Layout duct system on floor plan, accounting for the direction of joists, roof hips, fire-walls, and other potential obstructions. Determine register locations and types, duct lengths, and connections required to produce layout given construction constraints;
3. Size duct system according to ACCA Manual D calculation procedures (or substantially equivalent);
4. Size HVAC equipment to sensible load using ACCA Manual S procedures (or substantially equivalent);
5. Install equipment and ducts according to design specifications, using installation requirements and procedures from the Uniform Mechanical Code, the Air Diffusion Council, SMACNA, California Residential Energy Efficiency Standards, and manufacturers' specifications (Title 24); Using these procedures and those in Appendix A, the duct system should be substantially air tight;
6. Charge the system appropriately, and verify charge with the evaporator superheat method or subcooling method (or substantially equivalent);
7. Check for proper furnace burner operation and fire-box drafting;
8. Test the system to ensure that it performs properly by determining (1) that the system is properly sized, (2) it does not leak substantially, and has either (3a) proper air handler fan flow, and proper plenum static pressures, or (3b) proper room and return air flows, and proper plenum static pressures. (Procedures are detailed in accompanying Scope of Work.)

Scope of Work

Details for an HVAC System: Materials, Fabrication, Design, Installation, and Performance Testing

MINIMUM MATERIALS SPECIFICATIONS

The following are minimum materials specifications recommended to achieve a substantially tight installation that will last:

All Materials

- Shall have a minimum performance temperature ratings per UL181 (ducts), UL181A (closure systems for rigid fiberglass ducts), UL181B (closure systems for flexible ducts) and/or UL 181BM (mastic); Butyl-back tape may also be used to seal ducts, ductboard and metal;
- Shall have a flame spread rating of no more than 25 and a maximum smoke developed rating of 50 (ASTM E 84);

Factory-Fabricated Duct Systems

- All factory-fabricated duct systems shall include UL 181 listed ducts with approved closure systems including collars, connections and splices;
- All pressure-sensitive and heat-activated tapes used in the manufacture of rigid fiberglass ducts shall be UL 181A listed;
- All pressure-sensitive tapes and mastics used in the manufacture of flexible ducts shall be UL 181B (tape) or UL 181BM (mastic) listed.

Field-Fabricated Duct Systems

- Ducts:
  - Factory-made ducts for field-fabricated duct systems shall be UL 181 listed.
- Mastic sealants and mesh:
  - Sealants shall be UL 181BM listed, non-toxic, and water resistant;
  - Sealants for interior applications shall pass ASTM tests C 731 (extrudability after aging) and D 2202 (slump test on vertical surfaces);
  - Sealants and meshes shall be rated for exterior use;
  - Sealants for exterior applications shall pass ASTM tests C 731, C 732 (artificial weathering test), and D 2202.
- Pressure-sensitive tapes:
  - cloth-backed, rubber-adhesive tapes (typical duct tape) shall not be used even if UL 181B rated;
  - Tape used for flexduct shall be UL 181B listed or be aluminum-backed butyl adhesive tape (15 mil. minimum);
  - Tape used for duct board shall be UL 181A listed and so indicated with a UL 181A mark or aluminum-backed butyl adhesive tape (15 mil. minimum).
- Drawbands:
  - shall be either stainless-steel worm-drive hose clamps or uv-resistant nylon duct ties;
  - shall have a minimum performance temperature rating of 165 degrees Fahrenheit (continuous, per UL 181A-type test) and a minimum tensile strength rating of 50 pounds;
  - shall be tightened as recommended by the manufacturer with an adjustable tensioning tool.

DESIGN, FABRICATION, AND INSTALLATION

The following are design, fabrication, and installation guidelines that, if carefully followed, will provide a duct installation that is substantially airtight and that will provide proper airflow to each room of the house:

General Issues

- Ducts, plenums, and fittings should be constructed of galvanized metal, duct board, or flexible duct. Building cavities may not be used as a duct or plenum without a sealed duct board or metal liner.
- The air handler box should be air-tight;
- Air filters should be easily accessible for replacement, and evaporator coils should be easily accessible for cleaning;
- Ducts should be configured and supported so as to prevent use of excess material, prevent dislocation or damage, and prevent constriction of ducts below their rated diameter;
- Flexible duct bends should not be made across sharp corners or have incidental contact with metal fixtures, pipes, or conduits that can compress or damage the ductwork;

- Flexible ducts should not have bends that exceed 90º unless specified in the design;
- Sheet metal collars and sleeves should be beaded to hold drawbands.

DESIGN HVAC SYSTEM

Loads and CFM Calculation

- ACCA Manual J Load Calculation or equivalent required;
- Calculate heat loss and heat gain for each room;
- Total room loads to determine system requirements.

Lay Out Air Distribution System

- Lay out duct system on floor plan and determine register positions and duct paths to optimize room air circulation and minimize acutal duct length as well as equivalent lengths of fittings, bends, etc.;
- Duct paths must account for locations and directions of joists, roof hips, fire walls, and other potential obstructions;
- Duct paths must be planned to avoid sharp turns of flexduct that will kink the duct.

Size Air Distribution System

- ACCA Manual D Duct Design or equivalent required;
- Calculate correct cfm for each room and total for building for both supply and return;
- Size ducts according to Manual J loads, Manual D air flows, and final layout on plans;
- Choose registers to optimize air distribution and duct static pressure;
- Size and locate returns to optimize air flow per ACCA methods;
- For return-filter grills, calculate minimum return filter area per ACCA methods.

Select System

- ACCA Manual S Residential Equipment Selection or equivalent required. ACCA, 1515 16th St., NW, Washington, DC 20036, (202)483-9370;
- From Manual J loads and Manual D cfm, determine appropriate equipment
- Equipment should be sized to sensible loads;
- Equipment sensible capacity should not be more than 15% larger than the total sensible design load (as specified in Manual S).

FABRICATE AND INSTALL AN AIRTIGHT DUCT SYSTEM

All Duct Types

- All joints and seams of duct systems and their components should be sealed with mastic, mastic and embedded mesh, aluminum-backed butyl adhesive tape (15 mil. minimum), or pressure-sensitive tape approved for use by the duct manufacturer and meeting UL181 specifications, excluding cloth-backed rubber-adhesive tapes ("approved tape"); cloth-backed ruber-adheasive tapes shall not be used to attach or seal ducts.
- junctions of collars to distribution boxes and plenums should be sealed with mastic;
- All sealants should be used in strict accordance with manufacturer's installation instructions and within sealants moisture and temperature limitations;
- All tapes used as part of duct system installation should be applied to clean, dry surfaces and sealed with manufacturer's recommended amount of pressure or heat. If oil is present, taped surfaces should be prepared with a cleaner / degreaser prior to application;
- It is recommended that all register boxes should be sealed to the drywall or floor with caulking or mastic.

Flexible Ducts

- Flexible ducts should be joined by a metal sleeve, collar, coupling, or coupling system. At least 2 inches of the beaded sleeve, collar, or coupling must extend into the inner core while allowing a 1 inch attachment area on the sleeve, collar, or coupling for the application of tape;
- The inner core should be mechanically fastened to all fittings, preferably using drawbands installed directly over the inner core and beaded fitting. If beaded sleeves and collars are not used, then the inner core should be fastened to the fitting using #8 screws equally spaced around the diameter of the duct, and installed to capture the wire coil of the inner liner (3 screws for ducts up to 12" diameter, and 5 screws for ducts over 12" diameter);
- The inner core should be sealed to the fitting with mastic or approved tape;
- Tape used for sealing the inner core should be applied with at least 1 inch of tape on the duct lining, 1 inch of tape on the fitting of flange, and wrapped at least three times;
- The outer sleeve (vapor barrier) should be sealed at connections with a drawband and/or three wraps of approved tape;
- The vapor barrier should be complete. All holes, rips, and seams must be sealed with mastic or approved tape.

Metal Ducts and Plenums

- Metal-to-metal connections should be cleaned and sealed in accordance with manufacturer's specifications;
- Openings greater than 1/16 inch should be sealed with mastic and mesh, or butyl adhesive tape;
- Openings less than 1/16 inch should be sealed with mastic or UL-181A listed tape;
- Special attention should be paid to collar connections to duct-board and/or sheet metal; seal around the connection with mastic;
- Connections between collars and distribution boxes should be sealed with mastic;
- At least three equally-spaced #8 screws should be used to mechanically fasten round ducts (3 screws for ducts up to 12" diameter, and 5 screws for ducts over 12" diameter);
- Crimp joints should have a contact lap of at least 1½ inches;
- Square or rectangular ducts should be mechanically fastened with at least one screw per side.

Duct Board

- Duct board connections should be sealed with adhesive, mastic, or UL 181A listed pressure-sensitive or heat-activated tape in accordance with manufacturer's specifications.

Duct Support

- Supports should be installed per manufacturer's specifications or per UMC requirements;
- Supports for flexible ducts should be spaced at no more than 4 foot intervals;
- Flexible ducts should be supported by strapping having a minimum width of 1½ inches at all contact points with the duct;
- Supports should not constrict the inner liner of the duct;
- Flexible ducts should have maximum of ½ inch sag per foot between supports;
- Flexible ducts may rest on ceiling joists or truss supports as long as they lie flat and are supported at no more than 4 foot intervals.

Boots

- After mechanically attaching the register boot to floor, wall, or ceiling, all openings between the boot and floor, wall, or ceiling should be sealed with caulk, mastic, or butyl-adhesive tape.

Seal Air Handler

- Openings greater than 1/16 inch should be sealed with mastic and mesh, or butyl adhesive tape;
- Openings less than 1/16 inch should be sealed with mastic or UL 181A listed tape;
- Unsealed access doors should be sealed with UL 181A listed tape.

CHECK REFRIGERANT CHARGE

- For systems with fixed metering devices use evaporator superheat method:
  - indoor coil airflow must be greater than 350 cfm/ton;
  - refrigerant system evacuation must be complete (all non-condensables must be removed from the system;
  - in hot, dry climates be cautious to be within range of superheat charging chart or use a different method.
- For systems with thermostatic expansion valves use the subcooling method.

CHECK COMBUSTION PERFORMANCE

- Check each chamber for correct flame;
- Check for proper drafting.

TEST SYSTEM PERFORMANCE

The following are testing requirements and procedures that must be followed to ensure that the HVAC system has been properly installed. The tests are designed to determine whether:

1. *Room-by-room air flows are correct;*
2. *Total supply is as designed;*
3. *Total return = total supply;*
4. *Ducts, plenum, and air handler are tight;*
5. *Static pressure is correct.*

- Test the system to ensure that it performs properly, by (1) verifying HVAC equipment sizes installed are those specified, (2) measuring duct leakage, and measuring either (3a) fan flow or (3b) supply and return flows and plenum static pressures:
  1. Air conditioner sensible capacity must be no more than 15% greater than the calculated sensible load; fan flow must be greater than 350 cfm/ton; check that the correct size air handler is installed.

2. Ensure that the duct system does not leak substantially:
   a. A rough system, including both supply and return but without the air handler, should not leak more than 3% of specified fan flow (cfm leakage measured with HVAC system pressurized to 25 Pa);
   b. For finished installation, including supply, return, the air handler and finished registers, measured leakage must be less than 6% of nominal fan flow, or measured fan flow or of measured return flow (cfm leakage measured with HVAC system pressurized to 25 Pa);

3a. Measure air handler air flow and static pressure across fan; ensure that total air handler output is within 5% of design and manufacturer specifications at a static pressure within 0.1 in wg of design.

3b. Supply and return air flow, and static pressure requirements: Ensure that supply and return flows are correct, and that the static pressure across the fan is correct:
   a. Measure room-by-room air flows to ensure that each register is within 15% of Manual D design air flow, and that the entire supply is within 5% of design;
   b. Measure return air flow to ensure that it is within 5% of the total supply air flow;
   c. Test static pressure drop across the blower to ensure that it is within 0.1 in wg of design and manufacturer specifications.

- Duct leakage can be determined using a pressurization or depressurization technique; for details, see ASHRAE Standard 152P, California Energy Commission ACM Manual Appendix F, Minneapolis Duct Blaster™ manual, or other commercially available duct pressurization or depressurization devices;
- Duct leakage to unconditioned space can be determined with the house pressurization or LBL simplified technique; for details see CEC report P400-91-031CN, Section Six;
- Fan flow, supply flow and return flow measurements, see Minneapolis Duct Blaster™ manual (or equivalent); alternatively for supply and return flows, use a calibrated flow hood. Do not use a pitot tube, or any type of anemometer to determine these air flows;
- Static pressure drop across the fan is measured using static pressure probes in the return plenum and in the supply plenum.

REFERENCES

1991 Uniform Mechanical Code (UMC) Sections 1002 - 1005 and Appendix A, Standard No. 10-5.
Air Diffusion Council, Flexible Duct Performance & Installation Standards.
ACCA Manual J, Seventh Edition, 1986
ACCA Manual D, New Edition, 1995

ACCA	1515 16th St., NW, Washington, DC 20036, (202)483-9370
ASHRAE	1791 Tullie Circle, N.E., Atlanta, GA 30329, (404)636-8400
ASTM E 84	Test for Surface Burning Characteristics of Building Materials
ASTM C 731	Extrudability After Aging
ASTM C 732	Artificial Weathering Test
ASTM D 2202	Slump Test on Vertical Surfaces

California Energy Commission 1516 9th Street, Sacramento, CA 95814-5512, (800) 772-3300

SMACNA Manual	Installation Standards for Residential Heating and Air Conditioning Systems
UL Standard 181	Standard for Factory-Made Air Ducts and Air Connectors
UL Standard 181A	Standard for Closure Systems for Use with Rigid Air Ducts and Air Connectors
UL Standard 181B	Standard for Closure Systems for Use with Flexible Air Ducts
UL Standard 181BM	Standard for Mastic Materials

Standard Practice for Installation of Sliding Glass Doors With Integral Mounting Flange in Wood Frame Construction

This practice has been approved as an industry standard by the California Association of Window Manufacturers (CAWM) Technical Committee and by general membership ballot as of August 15, 1997

1. Scope

1.1 This practice covers the installation of sliding glass doors (doors) in residential wood frame buildings of no more than four (4) stories in height.

1.2 This practice applies to metal and non-metal framed doors when an integral mounting flange is employed for installation.

1.3 This practice covers the installation process from pre-installation procedures through post-installation procedures. It does not cover the fabrication or assembly of units whether such fabrication takes place in a factory or at the intended installation site.

1.4 This practice covers aspects of installation relating to the effectiveness and durability in service.

1.5 This practice provides minimum requirements that will help to ensure the installation of doors in an effective manner. Actual conditions in buildings vary greatly, and in some cases substantial additional care and precaution will have to be taken.

1.6 This practice does not purport to address all of the safety problems associated with its use. It is the responsibility of whoever uses this standard to consult and establish appropriate safety and health practices and determine the applicability of regulatory limitations prior to use.

2. Referenced Documents

2.1 ASTM:

B 633 “Standard Specification for Electrodeposited Coatings of Zinc on Iron and Steel”
B 766 “Standard Specification for Electrodeposited Coatings of Cadmium on Steel”
C 920 “Standard Specification for Elastomeric Joint Seals”

2.2 AAMA 800 “Voluntary Specifications and Test Methods for Sealants”

2.3 Federal Specifications:

TT-S-002300 “Sealing Compound: Elastomeric Type, Single Component”
TT-S-001657 “Butyl Sealants”
TT-S-001543A “Silicone Sealants”
UU-B-790a “Building Paper, Vegetable Fiber: (Kraft, Waterproofed, Water Repellent and Fire Resistant)

2.4 UBC Section 2325.1 - Fasteners

3. Definitions

3.1 ***Galvanic Corrosion*** -A form of deterioration of metal resulting from the electrochemical reaction that occurs when certain dissimilar materials are in contact in the presence of moisture.

3.2 ***Residential Building*** -Any building used or intended primarily for a single or multiple family dwelling.

3.3 ***Mounting Flange*** - A fin projecting from the door frame parallel to the plane of the wall for the purpose of securing the frame to the structure.

3.4 ***Sill Pan System*** **-** Sill pan system is a water barrier installed under the door sill with vertical returns at the jamb-sill juncture and the interior leg of sill to prevent water entry (See Figures 3d and 3f).

3.5 ***Sill System*** - Sill System is a water barrier installed under the door sill.

4. Significance and Use

4.1 This practice recognizes that effectiveness and durability of installed units depend not only on the choice and quality of materials, design, adequacy of assembly, and support system, but also on their proper and workmanlike installation.

4.2 Improper installation of units may reduce their effectiveness, lead to excessive air, water and sound leakage, condensation, and may promote the deterioration of wall constructions, windows, doors, and their respective finishes. Additionally, improper installation of metal units may result in accelerated corrosion of metal frames, trim, anchors, fasteners, and finishes.

4.3 The application of this practice also requires a working knowledge of applicable Federal, State, and local codes and regulations, specifically, but not limited to required means of egress and requirements for safety glazing. Consult with local building codes prior to installation.

4.4 The application of this practice also requires a working knowledge of the tools, equipment, and methods necessary for the installation of doors. It further assumes familiarity with caulking and sealing and with glass handling procedures, painting where applicable, and an understanding of the fundamentals of residential construction that affect the installation of these units.

5. Procedure

5.1 ***Framing Requirements*** - The rough framed opening to receive the door shall be sufficiently larger in width and height than the actual frame dimensions of the door. To assure adequate clearance, the framer shall consult the manufacturer's literature for the recommended rough opening dimensions. The framing shall be plumb, square and level, (See Figure 1). In addition, the condition of the area where the sill is to be installed shall be level, flat and free of voids, holes, chipping, or other conditions which will not allow for sealant to maintain continuous contact (See Figures 2 & 3).

5.2 ***Protection from Dissimilar Materials***

5.2.1 Isolate aluminum products from dissimilar or corrosive materials.

5.2.2 Protect aluminum sills from direct contact with corrosive materials, e.g. concrete, steel and stucco.

5.2.3 All fasteners shall be corrosion resistant, in accordance with ASTM B 633 or B 766.

5.3 ***Flashing Requirements*** - Proper flashing and/or sealing is necessary as a secondary barrier to prevent water from entering the wall between the door frame and the adjacent wall materials. Flashing and/or an appropriate method of sealing shall be designed as a part of an overall weather-resistive barrier system. It is not the responsibility of the door manufacturer to design or recommend a flashing system appropriate to each job condition.

NOTE 1 - The responsibility for supporting and protecting any flashing material from sources of damage, e.g. weather, other trades, or vandalism, and properly integrating the flashing system into the weather-resistive barrier for the entire building, will be the responsibility of the owner/general contractor or his designated agent.

5.3.1 ***Penetration Flashing Material*** - Flashing material shall meet Federal Specification UU-B-790a Type I, and shall be Grade C, B or A. Flashing material shall carry continuous identification.

5.4 ***Application***

5.4.1 One of the two following methods shall be selected as the application to be followed. Once a method is selected, all procedures of that method must be performed in the described sequence. Substitution of a procedure from one method to the other is not permitted.

5.4.1.1 ***Method A***

5.4.1.1.1 A strip of approved flashing material should be at least nine inches wide. Flashing shall be applied in a weatherboard fashion around the top and side perimeters of the opening, as well as below the sill, when applicable.

5.4.1.1.2 Apply continuous sealant beads across the full sill length of the framed opening at a point that makes contact with the door sill or sill pan system. An equivalent of two (2) 3/8" diameter beads should be used. Deposit a sufficient amount of sealant at the framed opening corners so the bottom door frame corners are embedded in sealant when door is installed (See Figure 2).

NOTE 2 - All surfaces contacting sealant must be clean, dry and free of all contaminants prior to application of sealant. Sealant used must adhere and be chemically compatible with all substrates.

5.4.1.1.3 Apply a continuous seal to the backside (interior) of the sill mounting flange, if provided, near the outer edge or a continuous seal to the perimeter of the opening at a point to assure contact with the backside (interior) of the mounting flange (See Figure 4a). The door shall then be installed in accordance with Section 5.5 installation.

5.4.1.1.4 Next, apply a continuous seal to the exposed mounting flange at the top (head) and sides (jambs) of the installed door frame. For mechanically joined frames, apply seal at corners the full length of the seam where mounting flanges meet (See Figure 5a).

5.4.1.1.5 Starting at each jamb, embed the jamb flashing into the seal and fasten in place. Run this flashing beyond the bottom of the rough opening and above where the head flashing will intersect (See Figure 5a).

5.4.1.1.6 Finally, embed the head flashing into the sealant on the mounting flange at the door head. Cut this flashing sufficiently long so that it will extend beyond each jamb flashing. Fasten in place (See Figure 6).

5.4.1.1.7 Next, go to Section 5.5 Installation.

5.4.1.2 ***Method B***

5.4.1.2.1 A strip of approved flashing material should be at least nine inches wide. Flashing shall be applied in a weatherboard fashion around the top and side perimeters of the opening, as well as below the sill, when applicable.

5.4.1.2.2 Apply continuous sealant across the full sill length of the framed opening at a point that makes contact with the door sill or sill pan system. The equivalent of two 3/8" diameter beads should be used. Deposit a sufficient amount of sealant at the framed opening corners so the bottom door frame corners are embedded in sealant when door is installed (See Figure 2).

NOTE 3 -All surfaces contacting sealant must be clean, dry and free of all contaminants prior to application of sealant. Sealant used must adhere and be chemically compatible with all substrates.

5.4.1.2.3 Next, fasten strips of flashing at each vertical edge (jamb) of the opening. Run this flashing beyond the bottom of the rough opening and above where the head flashing will intersect (See Figure 4b).

5.4.1.2.4 Apply a continuous seal to the backside (interior) of the mounting flange near the outer edge or a continuous seal to the entire perimeter of the opening at a point to assure contact with the backside (interior) of the mounting flange (See Figure 5b).

NOTE 4 - Caution must be taken to avoid disrupting the continuous seal.

5.4.1.2.5 The door shall then be installed in accordance with Section 5.5 installation procedures.

5.4.1.2.6 For mechanically joined frames, apply seal at corners the full length of the seam where mounting flanges meet.

5.4.1.2.7 Next, apply a continuous seal at the top (head) mounting flange and embed the bottom of the head flashing over the sealant and the mounting flange. Cut this flashing sufficiently long so that it will extend beyond each jamb flashing. Fasten in place (See Figure 6).

5.5 ***Installation***

5.5.1 Depending on rough opening conditions, the mounting flange, if provided on the door sill, may have to be removed. These conditions may include slab on grade that continues to the exterior; metal, plastic or flexible membrane sill pan systems; recessed installations; buildings with exterior decking. Follow door manufacturer's instructions on mounting flange removal (See Figure 3).

5.5.2 Depending on the size and weight of the door and the opening conditions, shim blocks may be required under the sill to maintain straight and level condition and to prevent rotation (See Figure 3c). Consult manufacturer's recommendations.

5.5.3 If shims are needed at the sill, use enough to support the weight of the fixed and operable panels without causing distortion in the sill.

5.5.3.1 If a sill pan system is used, shim between the opening and the pan, not between the pan and the door sill.

5.5.3.2 Use sealant above and below the shims.

NOTE 5 -All surfaces contacting sealant must be clean, dry and free of all contaminants prior to application of sealant.

5.5.4 If necessary, pre-drill and fill holes with sealant and seal over fasteners that penetrate door threshold.

5.5.5 Shim and adjust the door as necessary to achieve a plumb, square and level condition, as well as an even reveal around the frame opening, securing it the full perimeter with the equivalent of 6d fasteners at a maximum 16-inch centers.

5.5.5.1 Some door manufacturers may require fasteners at the interior or through the frame members. Consult manufacturer's installation instructions.

NOTE 6 - Consult door manufacturer's installation instructions regarding attachment of head flange to rough opening.

5.5.6 In each direction from all corners there must be a fastener within 10 inches, but no closer than 3 inches, to prevent frame distortion or fracture of joint seals (See Figure 4a for Method A, 5b for Method B).

5.5.7 In all cases consult manufacturer's instructions for any special procedures or applications.

NOTE 7 - If any damage to door frame joint seals is observed during installation, it must be repaired by the installer.

5.5.8 Where weather-resistant building paper, insulating board, or other materials *by other trades* may constitute the primary weather barrier behind the exterior wall finish (i.e. stucco, masonry, siding, etc.), Owner/General Contractor is responsible to ensure that the weather barrier is continuous by effectively sealing the material to the door frame (See Figure 7).

5.6 ***Sealant Requirements***

5.6.1 Sealing/caulking required between the door frame and the flashing can be accomplished with caulking conforming to AAMA 800 and/or ASTM C-920 and/or TT-S-00230 C (Type II) Class A, or use sealant recommended and approved by the sealant manufacturer. All sealant and caulking products used must adhere and be chemically compatible with all substrates.

5.6.2 Some exterior wall finishes require additional sealing between the perimeter of the door frame and adjacent finish wall material. Owner/General Contractor is responsible for identifying the need for any additional sealant which will be applied *by others*. Such sealant shall be elastomeric material, compatible with door framing and adjacent wall materials (See Figure 7). All sealant and caulking products used must adhere and be chemically compatible with all substrates.

5.7 ***Finish, Door and Sealant Protection***

5.7.1 Caution shall be taken to avoid damage to doors during and after installation. Prior to installation, store doors in a near vertical position in a clean area, free of circulating dirt or debris and protected from exposure to weather elements.

5.7.2 Field-applied protective coatings can damage door sealants and gaskets and are not recommended. Contact the door manufacturer before applying any such coatings.

5.7.3 Caution should be used with some masking tapes as they may cause damage when they are removed from door surfaces.

5.7.4 Stucco or concrete left to cure on frames and glass will damage these surfaces. Remove and clean all such materials from surfaces before any curing action takes place.

5.7.5 Glass and frame surfaces exposed to leaching water from new concrete or stucco must be rinsed immediately with clear water to prevent permanent damage.

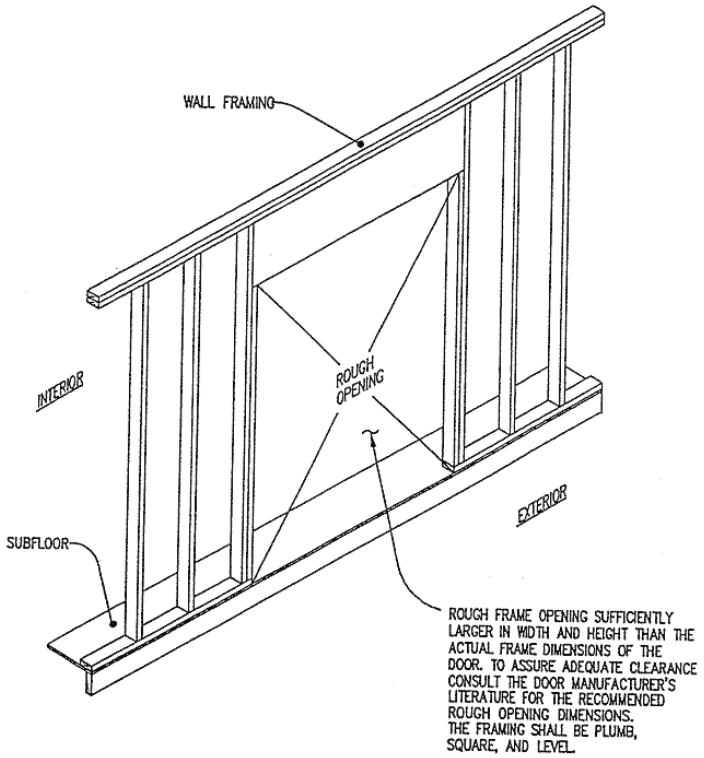

Fig. 1. Rough Door Opening

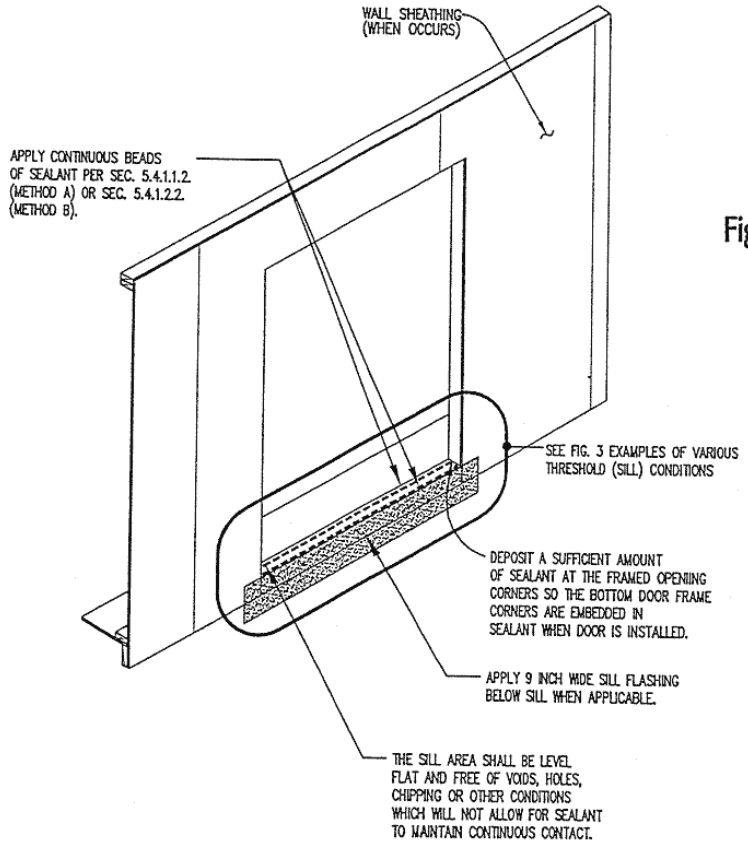

Fig. 2. Threshold (Sill) Seal Application

Fig. 3. Examples of Various Threshold (Sill) Conditions

NOTE 1: THESE SILL SECTIONS ARE SCHEMATIC AND WILL VARY BETWEEN MANUFACTURERS

NOTE 2: PROTECT ALUMINUM SILLS FROM DIRECT CONTACT WITH DISSIMILAR MATERIALS, E.G. CONCRETE, STEEL AND STUCCO.

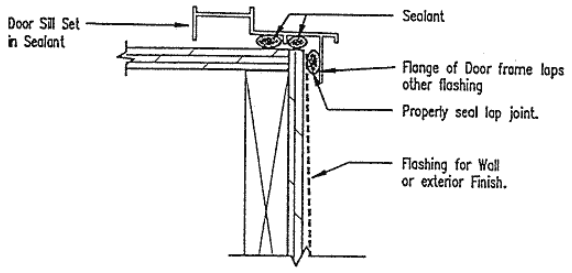

Fig. 3a. Wood Sub-Floor

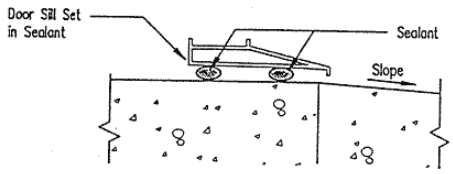

Fig. 3b. Concrete or Wood Sub-Floor

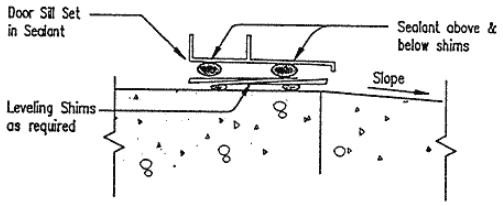

Fig. 3c. Concrete or Wood Sub-Floor with Shims

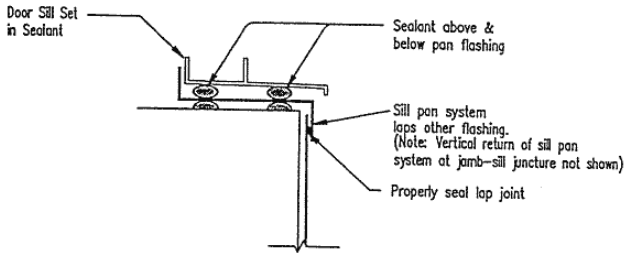

Fig. 3d. Pan Flashing

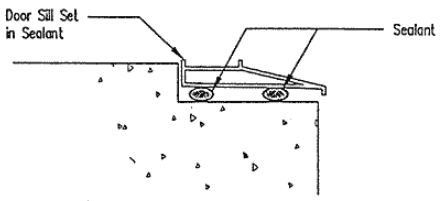

Fig. 3e. Recessed Sill

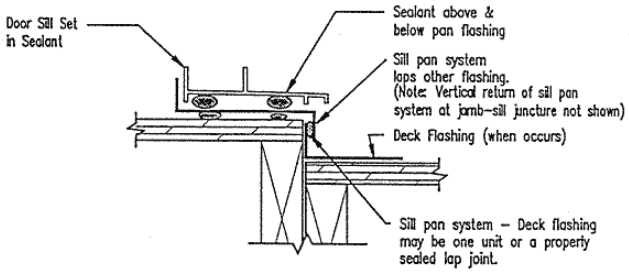

Fig. 3f. Exterior Decking

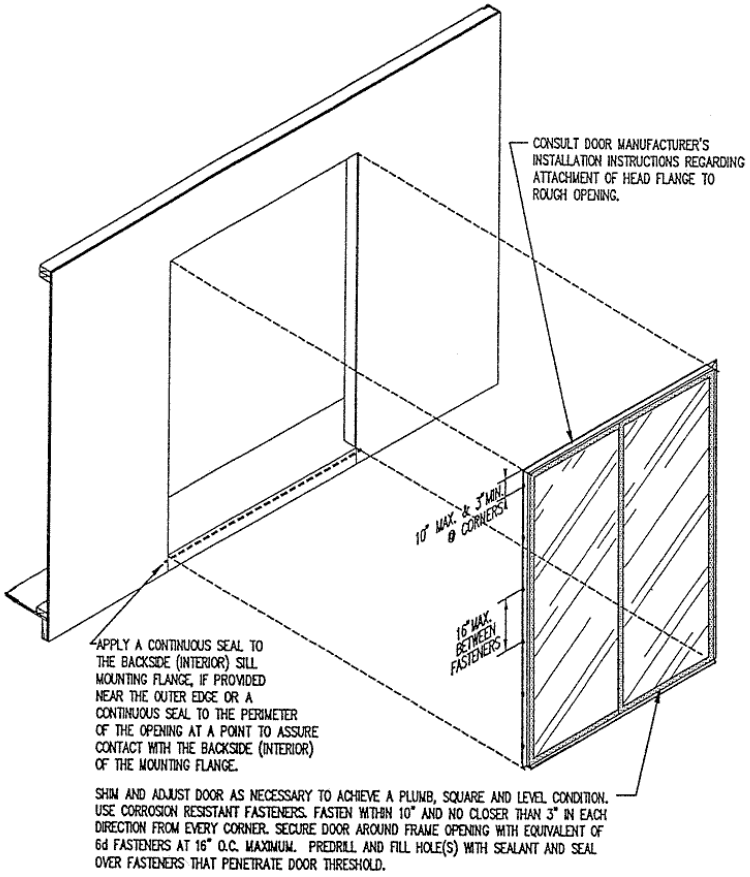

Fig. 4a. Door Installation (Method 'A')

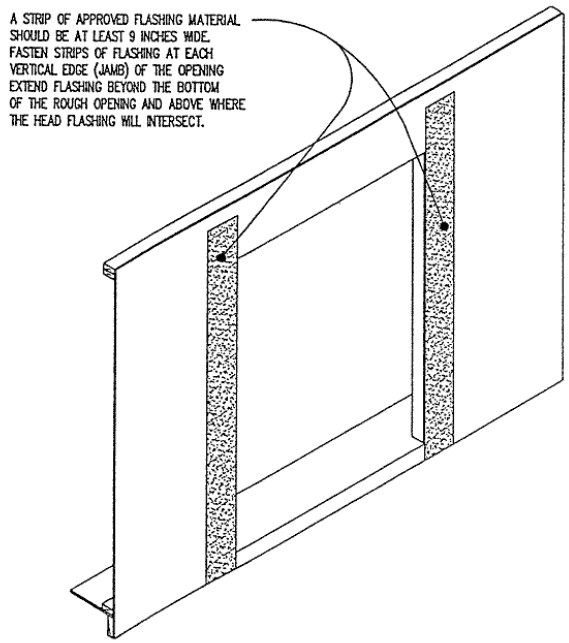

Fig. 4b. Jamb Flashing (Method 'B')

Fig. 5a. Jamb Flashing (Method 'A')

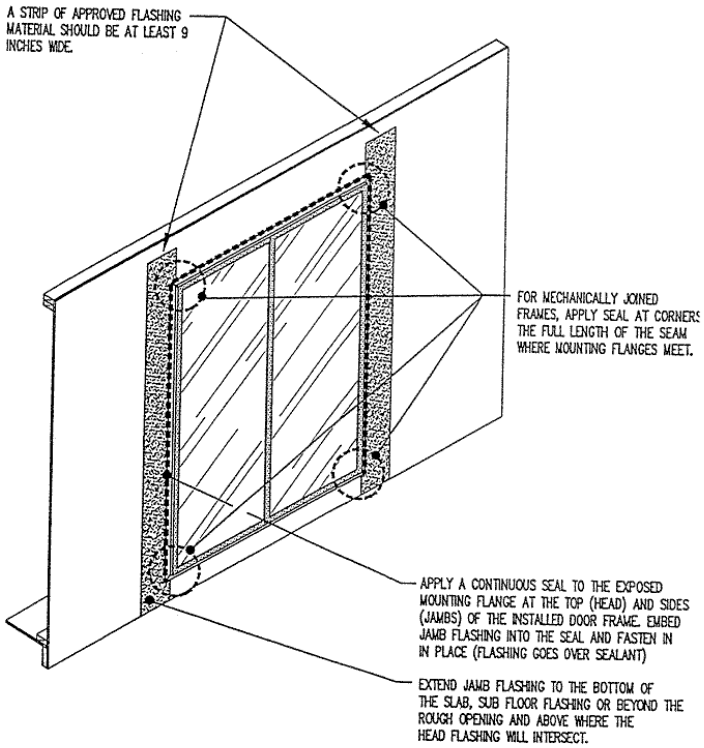

Fig. 5b. Door Installation (Method 'B')

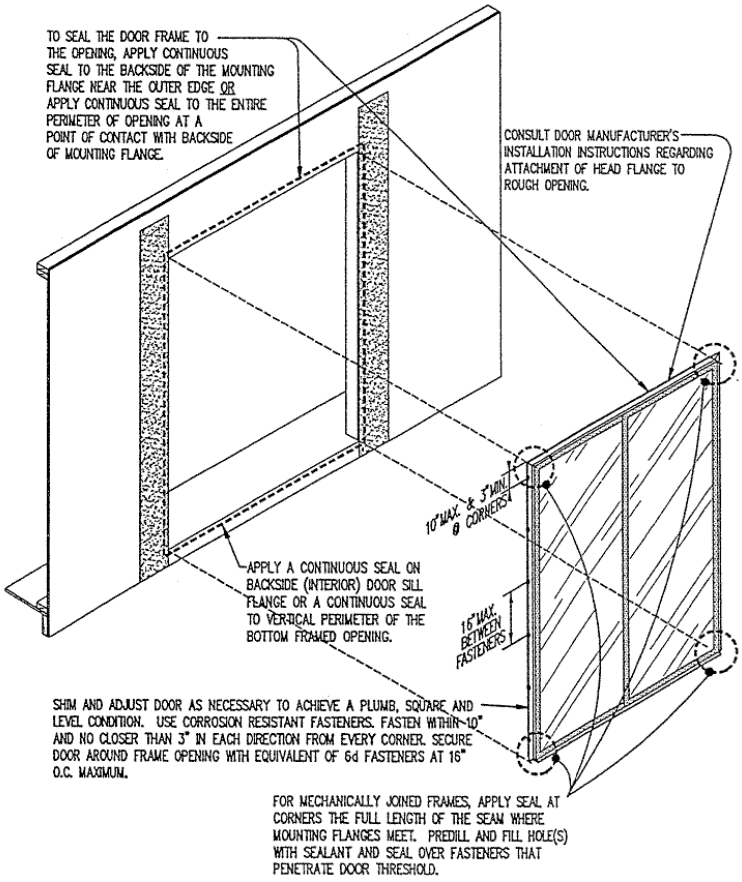

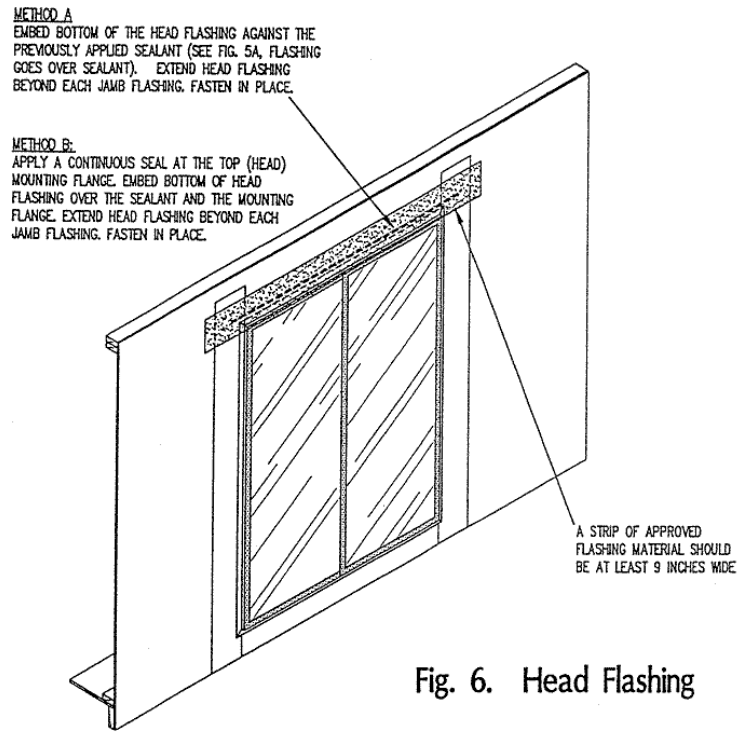

Fig. 6. Head Flashing

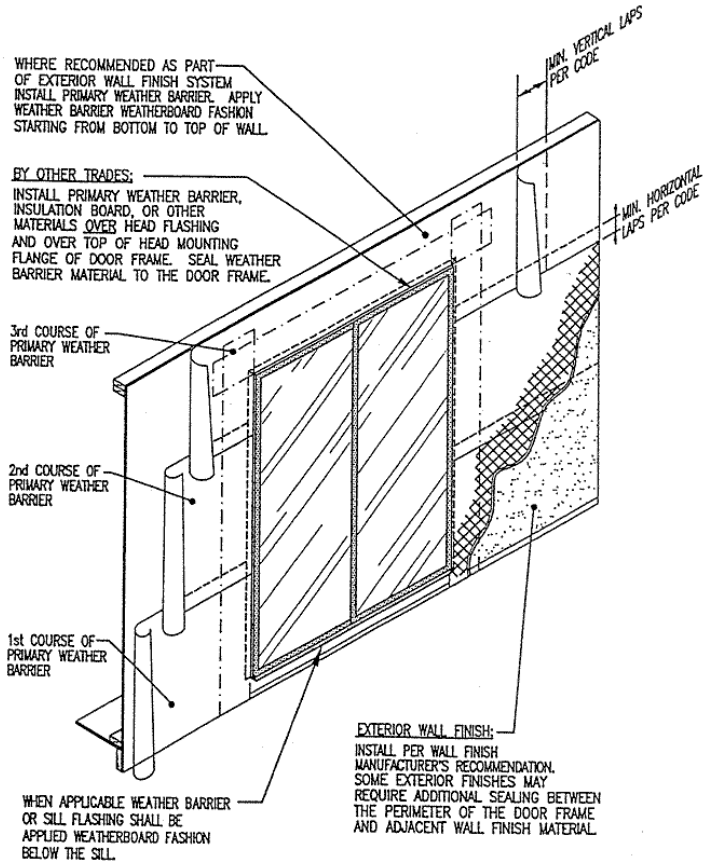

Fig. 7. Primary Weather Barrier Application by Others

EFFICIENCY, RENEWABLES & DEMAND ANALYSIS DIVISION

BLUEPRINT Questions and Answers

Special Bulletin

Q If the application for a master plan community was submitted before October 1, 2005, can all of the homes under that plan be built under the 2001 energy Standards, even though the build-out of the subdivision may take several years?

A No, each building in the master plan must comply with the current codes at the time each building permit application is submitted. The effective date of the new 2005 Energy Efficiency Standards for residential and nonresidential buildings is October 1, 2005. Builders often build 20 or so buildings at a time and submit applications for permits, pay fees, etc. at the time each phase of construction is set to begin. If the applications for a building permit for each of those buildings are all submitted prior to the effective date of the new Standards, then those buildings can show compliance under the 2001 Standards. Any application for a building permit for a particular building that is submitted after October 1, 2005 must comply with the 2005 Standards.

What the Standards actually say:

TITLE 24, PART 6, SECTION 100 – SCOPE

(a) Buildings Covered. The provisions of Title 24, Part 6, apply to all buildings:

2. For which an application for a building permit or renewal of an existing permit is filed (or is required by law to be filed) on or after the effective date of the provisions, or which are constructed by a governmental agency;

TITLE 24, PART 1, CHAPTER 10, SECTION 10-103 (a)

2. Application for a building permit. Each application for a building permit subject to Part 6, shall contain at least one copy of the documents listed in Sections 10-103 (a) 2 A, 10-103 (a) 2 B, and 10-103 (a) 2 C.

   A. For all newly constructed buildings, additions, alterations or repairs regulated by Part 6, the applicant shall file the appropriate Certificate(s) of Compliance on the plans. The certificate(s) shall indicate the features and performance specifications needed to comply with Part 6, and shall be approved by the local enforcement agency by stamp or authorized signature. …

   B. Plans and specifications submitted with each application for a building permit shall show the characteristics of each feature, material, component, and manufactured device proposed to be installed in order to have the building meet the requirements of Part 6, and of any other feature, material, component, or manufactured device that Part 6 requires be indicated on the plans and specifications. Plans and specifications submitted with each application for a building permit for Nonresidential buildings, High-rise Residential buildings and Hotels and Motels shall provide acceptance requirements for code compliance of each feature, material, component or manufactured device when acceptance requirements are required under Part 6. …

   C. All documentation necessary to demonstrate compliance for the building, and of the sections of Part 6 with which the building is intended to comply shall be submitted with each application for a building permit. …

Publication number CEC-400-2005-050

This page is left intentionally blank.

EFFICIENCY, RENEWABLES & DEMAND ANALYSIS DIVISION

BLUEPRINT

COMING Next Week: An interview with **Charles Segerstrom** on PG&E's Energy Training Center in Stockton

Special Bulletin

Change-outs! Don't Be Left-out!

Changes in California's Energy Code for 2005

Q. What are the new 2005 requirements beginning on October 1, 2005 for installers when changing out HVAC equipment, including an air handler, outdoor condensing unit, cooling or heating coil, in an existing building?

A. Field research shows that ducts in existing homes on average allow about 30 percent of the heated or cooled air to wastefully leak out before it reaches the rooms it was intended to heat or cool. In this time of a looming peak electricity crisis, this is unacceptable.

It is a particularly bad idea to waste the energy savings from a new efficient air conditioner or furnace by connecting it to a leaky duct system. By decreasing the leakage of the system, the effectiveness of the equipment is increased, the airflow improves, and the space heats or cools faster, providing the homeowner better performance, lower utility bills, and more comfort.

Also, since leaky return ducts suck in air that may be polluted from the environment they are in (attic, crawlspace, garage), sealed ducts will produce a more healthy living space. To accomplish these benefits, starting October 1, 2005, California contractors in certain climate zones will be required to do duct sealing when changing out HVAC equipment in existing buildings. Third-party field verification by a certified home energy rater (HERS rater) also is required at least on a sampling basis to insure that the duct sealing is accomplished.

These new requirements apply when replacing the air handler, the outdoor condensing unit of a split system air conditioner or heat pump, cooling or heating coil, or the furnace heat exchanger. These replacements are considered alterations under the Standards.

For these change-outs in existing low-rise residential buildings in climate zones 2 and 9 through 16, contractors must use duct pressurization equipment (commonly called a "duct blaster") to test the leakage of the duct system following protocols adopted by the Commission when 40 linear feet or more of the duct system is in unconditioned space. Contractors must comply with one of the following four duct sealing requirements:

i. The measured duct leakage must be less than 15 percent of fan flow; or
ii. The measured duct leakage to outside must be less than 10 percent of fan flow; or
iii. The measured duct leakage must be reduced by more than 60 percent relative to the measured leakage prior to the installation or replacement of space conditioning equipment, and a visual inspection, including a smoke test, must demonstrate that all accessible leaks have been sealed; or
iv. If it is not possible to meet the duct requirements above, all accessible leaks must be sealed by the contractor and verified through a visual inspection and a smoke test by a certified HERS rater.

The ducts must meet duct sealing requirements, and be insulated to R-4.2 (climate zones 6, 7 and 8), R-6 (climate zones 2 and 9 through 13), or R-8 (climate zones 14, 15, and 16), contrractors must use Commission-approved sealing materials and comply with the California Mechanical Code requirements for ducts.

If the installed ducts form an entirely new duct system, the measured duct leakage must be less than 6 percent of fan flow. If the installed ducts are an extension of an existing duct

Continued on next page

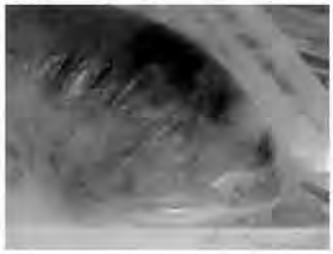

Pictured above: Scott Johnson shows Steve Easley how to perform a smoke-test with a duct blaster to help demonstrate a system's duct leakage. Research shows that about 30 percent of the heated or cooled air in a home is lost from duct leaks.

Change-outs!
Don't Be Left-out!

Continued from previous page

system must meet one of the four leakage requirements stated above.

For duct sealing, the contractor is required to test every duct system that is subject to the requirements as described above, and complete and sign page 4 of the CF-6R form for every system. The CF-6R must then be posted or be provided to the building department, and a copy of the CF-6R must be given to the HERS rater for every home.

The HERS rater must do the required field verification and testing (this could be on a sampling basis as discussed below), and then complete a CF-4R form for every home.

The CF-4R must then be provided to the building department before the home can be "finaled." If the contractor complies with requirements i, ii or iii above, the homeowner can choose either to have verification testing for his/her home or to be part of a sample, in which case the HERS rater is required to perform verification testing in only 1 out of 7 of the contractor's installations.

If the contractor is unable to comply with requirements i, ii or iii, and therefore must use requirement iv above, sampling is not an option for the HERS rater, and the HERS rater must visually inspect and smoke test every home for which the contractor uses this option.

During sampling, if the tested duct system does not pass, the HERS rater must test a second duct system from the sampling group. If the second duct system does not pass, then the HERS rater must test the other 5 duct systems in the group, which have been previously designated by the HERS provider (in consultation with the HERS rater and the installing contractor), before a CF-4R may be provided to the building department.

In addition to the duct sealing requirements described above, when split system air conditioners are changed-out in existing low-rise residential buildings in climate zones 2 and 8 through 15, contractors are required to either do refrigerant charge measurement using Commission-approved protocols or install a thermostatic expansion valve (TXV). The refrigerant charge measurement or installation of a TXV must be verified by a certified HERS rater with the homeowner choosing either to have verification testing for his/her home or to be part of a sample as described above for duct sealing.

The refrigerant charge measurement protocol includes airflow measurement. The Commission recommends airflow measurement in accordance with the Commission-approved protocols for every air conditioner change-out, including package and split-air-conditioners and even when the TXV option is chosen for compliance.

Thermostatic Expansion Valve

Also, space conditioning component change-outs must meet the Standards requirements for that component. The replacement unit must meet or exceed appliance efficiency standards (e.g., air conditioners manufactured after January 23, 2006 must meet or exceed an SEER of 13.0). If a thermostat is replaced, the replacement must be a setback thermostat ("ramping" setback thermostats for heat pumps). If cooling system refrigerant suction lines are replaced, they must meet minimum insulation requirements.

By law, HERS raters must be certified by a HERS provider and be independent from the HVAC contractor. HERS raters cannot have a financial interest in the installation of the equipment. HERS raters cannot be employees of the contractor whose work they are verifying, nor can HERS raters have a financial interest in the contractor's business, or advocate or recommend the use of any product or service that they are verifying.

Continued on next page

Change-outs!
Don't Be Left-out!

Continued from previous page

The Commission expects HERS raters to enter into a contract with the building owner (or the building owner's agent) to provide independent, third-party diagnostic testing and field verification. The HERS rater cannot be hired by the installing contractor (however, a three-way contract between the building owner, installing contractor and the HERS rater is acceptable). Currrently there are two Commission-approved HERS providers, CHEERS and CalCERTS, who train, certify and oversee HERS raters. Information about the HERS providers can be found at: http://www.CHEERS.org and http://www.CalCERTS.com.

Duct sealing is also required for change-outs of the same HVAC components in existing nonresidential buildings, high-rise residential buildings and hotels and motels. These requirements are very similar but a little different than for low-rise residential buildings. The duct sealing requirements must be met when single zone space conditioning equipment components are replaced and when at least 25 percent of the ducts are installed outside of the building or in unconditioned space (above an insulated drop or sheetrock ceiling).

Duct sealing must comply with requirements i, ii or iv above; complying with requirement iii is not an option. The same requirements apply for HERS rater field verification testing as for low-rise residential buildings.

When ducts are installed outside of the building or in unconditioned space in existing nonresidential, high-rise residential buildings and hotels and motels in all climate zones and for all space conditioning system types, the ducts must meet the duct sealing requirements above, have R-8 duct insulation, use Commission-approved sealing materials and comply with the California Mechanical Code requirements for ducts. Supply ducts installed inside the conditioned space must comply with the California Mechanical Code requirements for ducts.

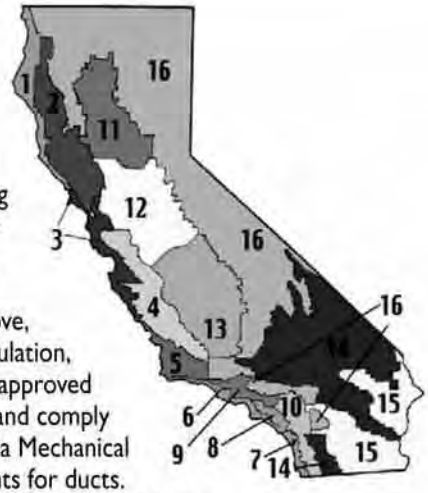

Change-outs of components in existing nonresidential buildings, high-rise residential buildings and hotels and motels must meet the requirements in the Standards for that component in the same way as they must be done for space conditioning change-outs in existing low-rise residential buildings (see the Standards mandatory requirements for more information).

To find out in which climate zone your project is located, go to the Commission's website: http://www.energy.ca.gov/maps/climate_zone_map.html and view the climate zone map. You can find a listing of the climate zone for each California city on that webpage, or you can also call the Energy Standards Hotline and ask Hotline staff to look it up for you (916-654-5106, or 800-772-3300 in California only).

Note that there are three exceptions to the above duct sealing requirements:

1. Duct systems that are documented to have been previously sealed as confirmed through field verification and diagnostic testing (tested by a HERS rater).
2. Duct systems with less than 40 linear feet in unconditioned spaces.
3 Existing duct systems constructed, insulated, or sealed with asbestos.

Continued on next page

Change-outs!
Don't Be Left-out!

Continued from previous page

When replacing space conditioning equipment (or components)in low-rise residential buildings, there are other alternatives to HERS verification of duct sealing (See Table 8-3 from the Residential Compliance Manual, Chapter 8, shown below).

Table 8-3 – Alternatives to Duct Sealing and Refrigerant Charge Measurement

	Option 1	Option 2	Option 3
Climate Zone	0.92 AFUE	SEER-14 & EER-12, with either TXV or refrigerant charge measurement, plus Increased Duct Insulation	SEER-14 & EER-12 with either TXV or refrigerant charge measurement, plus either 0.92 AFUE or 0.82 AFUE with Increased Duct Insulation
CZ2	Yes	No	Yes
CZ9	No	No	Yes
CZ10	No	Yes	Yes
CZ11	No	No	Yes
CZ12	Yes	No	Yes
CZ13	No	Yes	Yes
CZ14	No	No	Yes
CZ15	No	Yes	Yes
CZ16	Yes	No	Yes

1. Increased duct insulation refers to an additional R-4 insulation wrap on existing ducts and R-8 duct insulation for all new ducts.

2. Package systems may use Option 2 or 3 without meeting the requirement for a TXV (or refrigerant charge measurement)

Note - There are no duct sealing requirements in climate zones 1 and 3-8.

In climate zone 8, to avoid TXV or refrigerant charge measurement requirements, a SEER 14 air conditioner or a 0.82 AFUE furnace may be used.

- In **Climate Zones 2 and 12**: In these two climate zones, the contractor may replace an existing air conditioner with an air conditioner with any SEER that complies with the Appliance Efficiency Regulations (SEER 10 for units manufactured prior to January 23, 2006, SEER 13 for units manufactured on or after January 23, 2006), as long as the contractor also replaces the existing furnace or heat pump with a 0.92 or higher AFUE furnace or a 9.0 or higher HSPF heat pump. When this occurs there is no requirement for duct sealing or HERS verification.

- **Climate Zone 16**: In this climate zone the contractor may replace an existing air conditioner with an air conditioner with any SEER that complies with the Appliance Efficiency Regulations (SEER 10 for units manufactured prior to January 23, 2006, SEER 13 for units manufactured on or after January 23, 2006), as long as the contractor also replaces the existing furnace or heat pump with a 0.92 or higher AFUE furnace or a 10.0 or higher HSPF heat pump.

  When this occurs there is no requirement for duct sealing or HERS verification.

- In **Climate Zones 10, 13, and 15**: In these three climate zones the contractor may replace an existing air conditioner
  - with an air conditioner that has a 14 or higher SEER and also has a 12 or higher EER , and
  - either does a refrigerant charge measurement or installs a TXV, and
  - adds R-4 duct wrap to all the ducts. When this occurs there is no requirement for duct sealing or HERS verification duct testing. There is, however, a requirement for HERS verification of the refrigerant charge measurement or the TXV and the EER. These measures can be HERS verified through sampling of 1 in 7 installations.

- In **Climate Zones 2 and 9 through 15**: In these eight climate zones the contractor has two choices:
  1. The contractor may replace an existing air conditioner with an air conditioner that has a 14 or higher SEER and also has a 12 or higher EER, and
     - either does a refrigerant charge measurement or installs a TXV, and
     - replaces the existing furnace or heat pump with a 0.92 or higher AFUE furnace or with a 9.0 or higher HSPF heat pump.

     When this occurs there is no requirement for duct sealing or HERS verification of the duct testing. There is, however, a requirement for HERS verification of the refrigerant charge measurement or TXV and the EER. These measures can be HERS verified through sampling of 1 in 7 installations; or
  2. the contractor
     - may replace an existing air

Continued on next page

Change-outs!
Don't Be Left-out!

Continued from previous page

Training is available to companies and groups on these new requirements. To request training contact the Commission by e-mail or call John Eash at : jeash@energy.state.ca.us [(916) 653-7181] or Nelson Peña at: npena@energy.state.ca.us [(916) 654-4217].

conditioner with an air conditioner that has a 14 or higher SEER and also has a 12 or higher EER, and
- either does a refrigerant charge measurement or installs a TXV, and
- replaces the existing furnace or heat pump with a 0.82 or higher furnace or 8.5 or higher HSPF heat pump, and
- adds R-4 duct wrap to all the ducts in unconditioned space.

When this occurs there is no requirement for duct sealing or HERS verification of the duct testing. There is, however, a requirement for HERS verification of the refrigerant charge measurement or TXV and the EER. These measures can be HERS verified through sampling of 1 in 7 installations.

- In **Climate Zone 16**: In this climate zone the contractor has two choices:
  1. the contractor may replace an existing air conditioner
     - with an air conditioner that has a 14 or higher SEER and also has a 12 or higher EER, and
     - either does a refrigerant charge measurement or installs a TXV, and
     - replaces the existing furnace or heat pump with a 0.92 or higher AFUE furnace or with a 10.0 or higher HSPF heat pump.

     When this occurs there is no requirement for duct sealing or HERS verification of the duct testing. There is, however, a requirement for HERS verification of the refrigerant charge measurement or TXV and the EER. These measures can be HERS verified through sampling of 1 in 7 installations; or
  2. the contractor
     - may replace an existing air conditioner with an air conditioner that has a 14 or higher SEER and also has a 12 or higher EER and
     - either does a refrigerant charge measurement or installs a TXV and
     - replaces the existing furnace or heat pump with a 0.82 or higher AFUE furnace or 9.0 or higher HSPF heat pump and
     - adds R-4 duct wrap to all the ducts in unconditioned space.

     When this occurs there is no requirement for duct sealing or HERS verification of the duct testing. There is, however, a requirement for HERS verification of the refrigerant charge measurement or TXV and the EER. These measures can be HERS verified through sampling of 1 in 7 installations.

- In **Climate Zones 1 and 3 through 8**: In these seven climate zones there are no low-rise residential requirements for duct sealing. In climate zone 8 there is a low-rise residential requirement for either refrigerant charge measurement or a TXV. In climate zone 8 the contractor may replace an existing air conditioner with a 14 or higher SEER air conditioner or replace an existing furnace or heat pump with a 0.82 or higher AFUE furnace or 8.5 HSPF heat pump. When this occurs there is no requirement for refrigerant charge measurement or TXV installation or HERS verification.

The Commission is working with HVAC trade associations such as the Institute of Heating and Air Conditioning Industries (IHACI), utilities, the Contractors State License Board (CSLB), distributors, and manufacturers to provide fact sheets for contractors to use as handouts to consumers to better explain these new requirements when bidding for change-out jobs.

EFFICIENCY, RENEWABLES & DEMAND ANALYSIS DIVISION

BLUEPRINT

Title 24

Energy Efficiency Standards Training

Special Bulletin

Arnold Schwarzenegger
Governor

CALIFORNIA ENERGY COMMISSION

Commissioners

Joseph Desmond
Chair
Jackalyne Pfannenstiel
Vice Chair
Arthur H. Rosenfeld
James D. Boyd
John L. Geesman

B.B. Blevins
Executive Director

Buildings and Appliances Office
1516 Ninth Street, MS-25
Sacramento, CA
95814-5512
(916) 654-4064

Beverly Duffy
Editor
Designer

Elaine Hebert
Technical Editor

Dottie Horgan
Distribution Manager

Kurt Pisor
Distribution Assistant

Special Thanks to:
Valerie Hall, Bill Pennington, Eurlyne Geiszler, Maziar Shirakh, Ram Verma, John Eash, Gary Flamm, Nelson Peña, Rob Schlichting, Rob Hudler and Tav Commins for their help in creating this edition of the Blueprint.

Publication no. CEC-400-2005-046

Links for training on issues relating to California Energy Efficiency Standards for Residential and Nonresidential Buildings (Title 24, Part 6) is available on the Energy Commission's website at:

http://www.energy.ca.gov/title24/training

For training offered by the utilities and other organizations please see the following websites:

PG&E:
http://www.pge.com/stockton

SCE:
http://www.sce.com/RebatesandSavings/EnergyCenters/workshops.htm

SMUD:
http://www.smud.org/education/index.html

CALBO TRAINING INSTITUTE
http://www.calbo.org

BUILDING INDUSTRY INSTITUTE (BII)
http://www.consol.ws/bect.asp

CABEC:
http://www.cabec.org/cepetrainandtest.php

Register for CABEC training and/or testing online at:
http://register.cabec.org/ceperegistration.php

Nonresidential Fenestration Certification Initiative (NFCI)
http://nfci.ecst.csuchico.edu

Residential Lighting Design Guide
– Best practices and lighting designs to help builders comply with California's 2005 Title 24 energy code
http://www.cltc.ucdavis.edu/

Need Help? CALL THE ENERGY HOTLINE @

(800) 772-3300 or (916) 654-5106

This page is left intentionally blank.

CSLB & California Energy Commission Partner to Provide Code Information to Contractors

New Energy Code requirements will become effective October 1, 2005

The Contractors State License Board and the California Energy Commission have teamed up to help contractors comply with the California Energy Code (also referred to as the Building Energy Efficiency Standards, Title 24, Part 6) as required and to provide information on new Code requirements that will become effective on October 1, 2005.

The new requirements will apply when space-conditioning equipment is replaced in existing low-rise residential and some commercial buildings, and will ensure that new systems are not connected to existing, leaky ductwork that allows heated or cooled air to wastefully escape before reaching its intended destinations. These requirements take advantage of the opportunity for contractors to seal the duct system when space conditioning equipment is replaced and include mandatory third-party quality control inspections to assure the work is done correctly.

The requirements apply to inland climate zones where there is substantial air conditioning or heating (zones 2, 9, 10, 11, 12, 13, 14, 15 and 16 as defined by the Commission) but do not apply to mild climate coastal regions.

Ductwork verification will be done independently of the system installation before the building department approves the work. The contractor will install the equipment, measure duct leakage, contract with a certified Home Energy Rating System (HERS) rater to conduct the verification, and inform the rater when the job is complete. The installing contractor must also determine that every system meets one of the four criteria established in the Standards. The rater, who must be independent of the installing contractor to avoid a conflict-of-interest, will then verify that the ducts have been properly sealed.

When single zone space-conditioning equipment is replaced in commercial buildings, duct sealing requirements must be met if at least 25 percent of the ducts are installed outside of the building or in unconditioned space.

Other Energy Code requirements may also apply when space-conditioning equipment is replaced. When split system air conditioner equipment is replaced, a HERS rater must verify the refrigerant charge measurement (or installation of a thermostatic expansion valve). There are also requirements for design methods and conditions, setback thermostats, refrigerant line insulation and duct insulation.

For more information, see the 2005 Residential Energy Standards Compliance Manual, available online at *www.energy.ca.gov/title24/2005standards/index.html*.

Training opportunities will be announced in the Energy Commission's quarterly newsletter, *the Blueprint*. To request the publication, or for other questions, call their hotline at either (916) 654-5106 or (800) 772-3300.

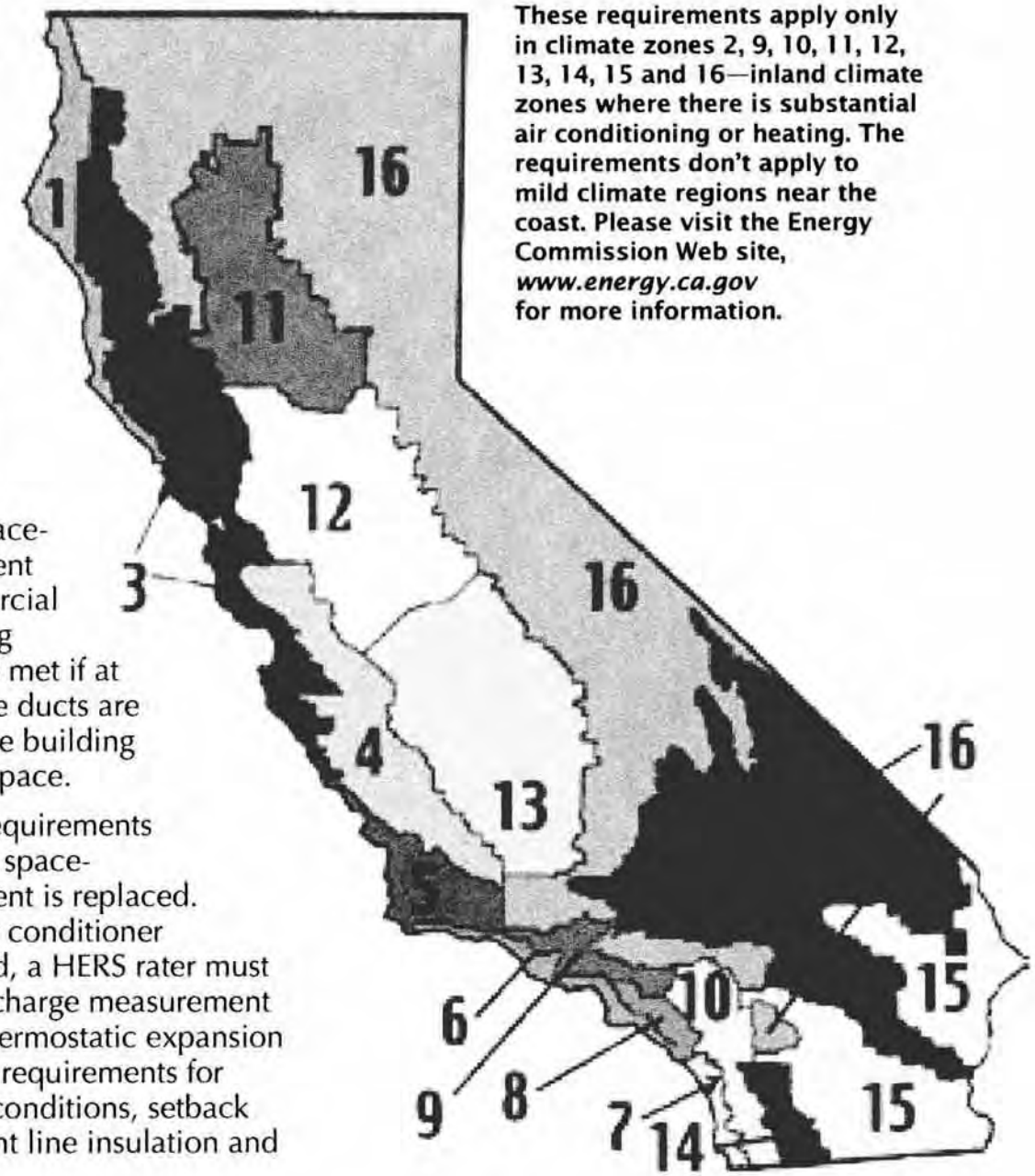

These requirements apply only in climate zones 2, 9, 10, 11, 12, 13, 14, 15 and 16—inland climate zones where there is substantial air conditioning or heating. The requirements don't apply to mild climate regions near the coast. Please visit the Energy Commission Web site, *www.energy.ca.gov* for more information.

California Building Climate Zone Map

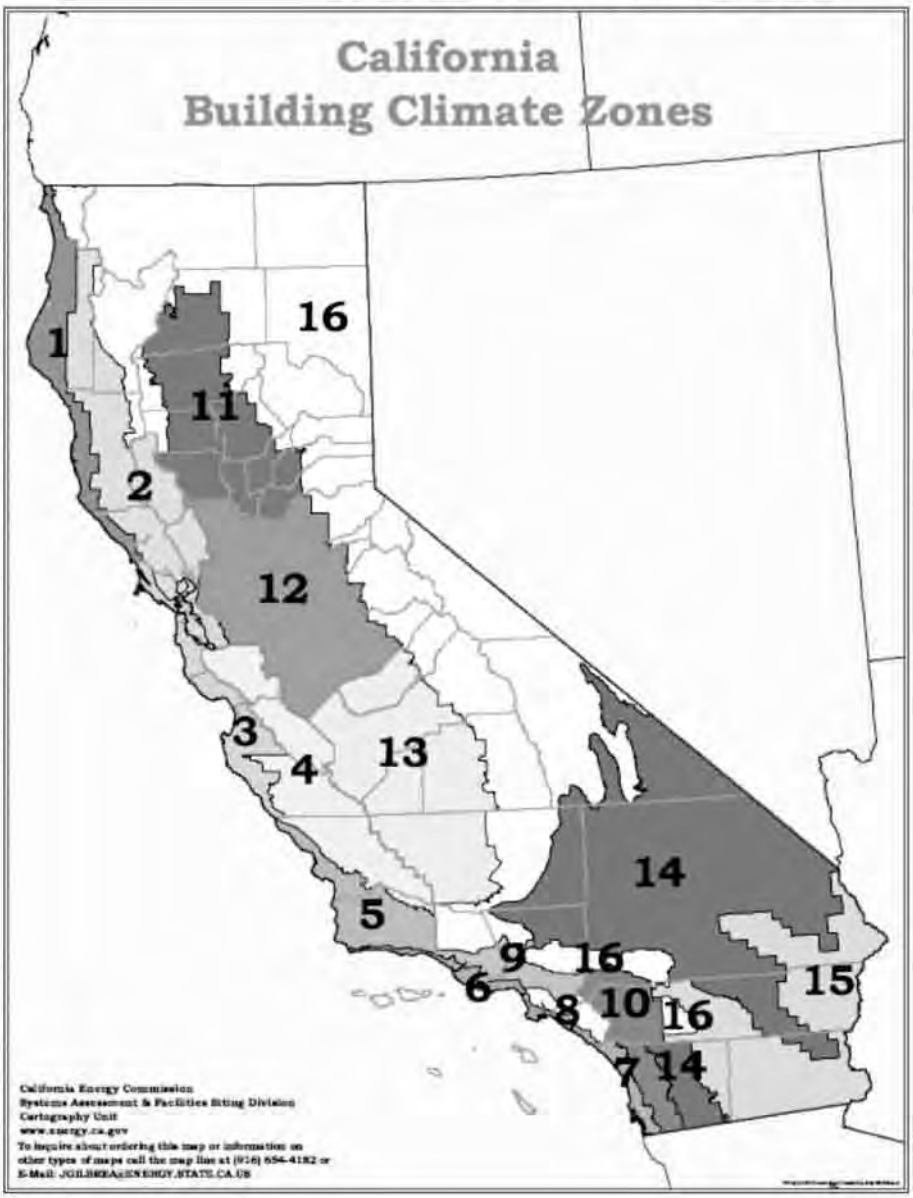

California Climate Zones on Google Earth™

Download a more detailed **Climate Zone Map** (adobe PDF, 1 page, 4.1 megabytes)

List of climate zones areas by City, Towns and other Locations:

- CLIMATE ZONES CITY LIST ACROBAT PDF
- CLIMATE ZONES CITY LIST MS WORD

List of climate zones areas by zipcode:

- CLIMATE ZONES BY ZIPCODE LIST ACROBAT PDF
- CLIMATE ZONES BY ZIPCODE LIST MS EXCEL

California Climate Zones on Google Earth™

Outlines of California's 16 Climate Zones have been overlaid on the aerial images of Google Earth. This might be useful to look at the boundary areas between two climate zones. The outlines are based on the GIS (Arcview) shapes.

Google Earth is free broadband, 3D application (currrently in beta testing) that can be downloaded from their website: http://earth.google.com/ (click get free version on the top right corner). Note: Not all computers and operating systems can run the Google Earth software.

Once you download, install and launch the application, download and open the Climate Zones CA-CZ.kmz 120 kb file (right-click this link to download) using the software. Since the free version does not allow labeling on the map, climate zones can be selectively viewed by using the check box along side each layer. We suggest that you uncheck all the climate zones and then select only the one of interest at the time to view.

CABEC California Association of Building Energy Consultants

2006 CEPE TRAINING & TESTING

Hello,

If you have already recertified with the 2005 Standards, this message does not apply to you.

Due to the significant changes in the 2005 Energy Code Standards, all CURRENT CEPE'S & CEA's need to RECERTIFY
with the 2005 Standards. **For those who haven't yet recertified or for those of you who would like to certify for the first time,**
we have scheduled Residential and Nonresidential CEPE Trainings and Tests in both in Downey at the Energy Resource Center and in Stockton at the Energy Training Center, in **March and April**.

REGISTER ONLINE TODAY at https://register.cabec.org/ceperegistration.php
Register online, or print out the Registration Form attached and mail/fax it in to the address/fax number below. After we have processed your payment, you will receive an e-mail confirmation along with information about the time and
location of your training(s) and/or test(s), as well as information about what you can bring to the exam. (You do not have to
take both the training and exam. You may register for training/testing only if preferred.)

Fees
Training - $20 (which includes a continental breakfast, lunch and materials)
Full CEPE exam (certifying for the first time) – $125.00 (includes a continental breakfast)
Recertification Exam - $95.00 (includes a continental breakfast)

For more 2006 CEPE Training & Testing information visit https://register.cabec.org/ceperegistration.php

Please feel free to give me a call if you have any questions or need assistance.

Best to you with your training and testing!

Kim Coolbaugh
CABEC Administrator
9974 Scripps Ranch Blvd. #130
San Diego, CA 92131
(877) 530-3045 Toll Free
(858) 530-3045 Local Phone and Fax

☐ DB ☐ QB ☐ RCT ☐ CONF
☐ CERT ☐ LTR
Ck # _____ Visa __ MC __

CABEC

California Association of Building Energy Consultants

C E P E

2006 Certified Energy Plans Examiner Training & Testing

REGISTRATION

Please complete a separate registration for each registrant

Name _____

Company _____

Address _____

City _____ State _____ Zip _____

Phone _____ Fax: _____ E-mail _____

TRAINING SCHEDULE

Residential

- ❑ Aug 30 Santa Rosa
- ❑ Aug 31 San Jose
- ❑ Sep 22 Stockton (ETC)
- ❑ Sep 21 Downey (ERC)
- ❑ **Sep 13 Webcast**

Nonresidential

- ❑ Oct 11 San Francisco (PEC)
- ❑ Oct 23 Stockton (ETC)
- ❑ Oct 27 San Jose
- ❑ Oct 26 Downey (ERC)
- ❑ **Oct 20 Webcast**

All classes are 9:00 a.m. to 4:00 p.m.
Materials and lunch will be provided for classroom training.
PG&E is generously providing funding for all instruction and facilities costs except for classes in Downey

TESTING SCHEDULE

Residential

- ❑ Oct 6 Stockton (ETC)
- ❑ Oct 6 Downey (ERC)

Nonresidential

- ❑ Nov 10 Stockton (ETC)
- ❑ Nov 10 Downey (ERC)

All tests are 9:00 a.m. to 1:30 p.m.
Test fees include Continental Breakfast

COST & PAYMENT INFORMATION

Training Costs: $35 (covers CABEC administration) Test: $125 Your Total: $ _____

Check enclosed $ _____ **OR** VISA $ _____ **OR** Master Card $ _____

Name on Card _____

Card Number _____ Exp. Date _____

Billing Address *(if different from above)* Street/City _____ Zip _____

Payments are non-refundable for cancellations received less than one week prior to scheduled event.
Cancellation fee of $25 will be charged for all other cancellations.
Maps and directions will be e-mailed with confirmation.

The CEPE Training & Test is sponsored by the California Energy Commission and administered by CABEC.
PG&E, SDG&E, and SoCalGas provide support for the CEPE Training & Testing.
Views and opinions of CABEC and the speakers are strictly their own. The supporting utilities do not warrant the accuracy, completeness, or usefulness of, nor shall they be liable for the information of presentations.

Send Registration Form and Payment to:
CABEC ◆ 9974 Scripps Ranch Blvd., #130 ◆ San Diego, CA 92131 ◆ Fax: 858-530-3045
Toll Free Phone: 877-530-3045 ◆ admin@cabec.org ◆ www.cabec.org

Register on-line or use this form (may be duplicated for additional registrants)