4. Building HVAC Requirements

4.1 Overview

4.1.1 Introduction and Organization

This chapter addresses the requirements for heating ventilating and air conditioning (HVAC) systems. All requirements are presented in this chapter so that it may serve as a single source of information for mechanical engineers and mechanical contractors.

The chapter is organized by system component or sub-system:

- Heating Equipment. The first section addresses the requirements for heating equipment, including mandatory measures, prescriptive requirements, and compliance options.
- Cooling Equipment. The second section addresses cooling equipment requirements.
- Air Distribution Ducts and Plenums. This section covers mandatory requirements such as duct insulation and construction practices as well as prescriptive requirements including duct diagnostic testing and sealing.
- Controls. This section addresses the requirements for setback thermostats and the compliance option for zonal control.
- Alternative Systems. This section covers a number of systems that are less common in California new construction, including hydronic heating, radiant floor systems, evaporative cooling, gas cooling, ground-source heat pumps, and wood space heating.
- Compliance and Enforcement. In this section the documentation requirements at each phase of the project are highlighted.
- Refrigerant Charge Testing. More information on the refrigerant charge testing procedure is included in this section, Glossary/Reference.

Chapter 8 covers the heating and cooling requirements for additions to existing dwellings and to alterations to existing heating and cooling systems.

4.1.2 Prescriptive Packages

The prescriptive requirements for HVAC systems vary depending on the prescriptive package selected. With package D, there are two options: one that

requires field verification and/or diagnostic testing and another that does not. The option that does not requires higher equipment efficiency and better windows.

Package C permits electric resistance space heating, but requires greater insulation levels and other measures. Field verification and diagnostic testing of ducts is always required under Package C.

4.1.3 Performance Method

By using the performance compliance method, designers can take credit for a number of HVAC efficiency improvements. These compliance credits are described below under the individual Compliance Options sections. Examples of measures that receive credit include improved equipment efficiency, reduced air handler fan watt draw, good duct design, adequate air conditioner air flow, and properly sized cooling capacity.

In addition to offering compliance credits, the performance method described in Chapter 7 provides flexibility for designs that do not necessarily meet all the prescriptive requirements.

4.1.4 What's New for 2005

Here is a summary of new HVAC measures for 2005:

- Split system air conditioners with single-phase power must have a minimum seasonal energy efficiency ratio (SEER) of 13.0 (as of January 23, 2006). Single-phase heat pump efficiency will also increase to SEER 13 and HSPF of 7.7.
- For the prescriptive packages, more duct insulation is required. For Package D, in climate zones 14 through 16, R-8 insulation is required. R-4.2 is required in climate zones 6 through 8, and R-6 is required in other climate zones. For Package C, R-8 is required in all climate zones.
- Duct sealing is now prescriptively required in climate zones 2 and 9 through 16 when an air conditioner or furnace is replaced and when new ducts are added or ducts are altered in an existing home.
- A number of new compliance options are offered to provide greater flexibility in complying with the standards when using the Performance Method. These include ducts covered by attic insulation, efficient air handler and duct systems, properly sized air conditioners, adequate airflow, high EER air conditioners, and gas cooling.
- There is no longer a prescriptive requirement for air conditioner airflow verification, though the requirement for testing refrigerant charge remains (with a thermostatic expansion valve as an option).

4.1.5 Common System Types

The typical new California home in the central valley and the desert has a gas furnace and a split system air conditioner. In some areas, a heat pump provides both heating and cooling, eliminating the furnace. In coastal climates and in the mountains, air conditioning is rare and most new homes are heated by gas furnaces. Heating and cooling is typically distributed to each of the rooms through air ducts. Most of the mandatory measures and prescriptive requirements are based on this type of system.

Although the Standards focus on the typical system, they also apply to other systems as well, including hydronic systems, where hot water is distributed to provide at least some of the heat to conditioned space; in contrast with conventional systems that distribute heated air to air heat the space. Electric resistance systems are also used in some areas and applications, although it is difficult for them to comply under the Standards. Ground-source heat pump (geo-exchange) systems are also used, especially in areas where there is no gas service. This chapter focuses mostly on typical systems, but a section is provided to deal with the alternative systems as well.

4.1.6 Appliance Standards and Equipment Certification

§110 – General

§111 – Appliance Standards

Most heating and cooling equipment installed in new California homes is regulated by the National Appliance Efficiency Conservation Act (NAECA) and/or the California *Appliance Efficiency Regulations*. Both the federal and state appliance standards apply to the manufacture of new equipment and are applicable for equipment used in replacements, repairs or for any other purpose. The appliance regulations are enforced at the point of sale, while the energy efficiency standards covered by this compliance manual are enforced at the building department.

The following types of heating and cooling equipment are covered by the appliance standards. For this equipment, the manufacturer must certify that the equipment complies with the *Appliance Efficiency Regulations* at the time of manufacture.

• Room air conditioners • Room air conditioning heat pumps • Central air conditioners with a cooling capacity of less than 135,000 Btu/hr • Central air conditioning heat pumps	• Gas-fired central furnaces • Gas-fired boilers • Gas-fired furnaces • Gas-fired floor furnaces • Gas-fired room heaters • Gas-fired duct furnaces • Gas-fired unit heaters.

The Appliance Efficiency Regulations do not require certification for:

- Infrared heaters
- Electric resistance heaters
- Oil-fired furnaces (some are voluntarily listed with certified gas-fired furnaces).

If any equipment does not meet the federal appliance efficiency standards, it may not be sold in California. Any equipment covered by the *Appliance Efficiency Regulations* and sold in California must have the date of manufacture permanently displayed in an accessible place on that equipment. This date is frequently included as part of the serial number.

Note: Equipment manufactured before the effective date of a new standard may be sold and installed in California indefinitely, as long as a performance approach demonstrates energy compliance of the building using the lower efficiency of the relevant appliances.

4.2 Heating Equipment

This section addresses the requirements for heating equipment, including furnaces, boilers, heat pumps and electric resistance equipment.

4.2.1 Mandatory Measures

Equipment Efficiency

§111 and §112(a)

Appliance Efficiency Regulations

The efficiency of most heating equipment is regulated by NAECA (the federal appliance standard) and the California Appliance Efficiency Regulations. These regulations are not contained in the Building Energy Efficiency Standards but are published separately. These regulations are referenced in §111 of the Standards. The Appliance Efficiency Regulations include definitions for all types of equipment. The energy efficiency of larger equipment is regulated by §112(a) of the Standards. See the Nonresidential Compliance Manual for information on larger equipment.

Gas and Oil Space Heaters

The current *Appliance Efficiency Regulations* require that the Annual Fuel Utilization Efficiency (AFUE) of all new central furnaces be at least 78 percent for equipment with output capacity less than 225,000 Btu/hr. Central furnaces with outputs greater than or equal to 225,000 Btu/hr are rated according to their Thermal (or Steady State) Efficiency. Gas and oilfired central boilers have the following AFUE or Combustion Efficiency requirements:

Table 4-1 – Minimum Heating Efficiency for Boilers

Source: California Appliance Efficiency Regulations

Type	Capacity	AFUE	Combustion Efficiency
Gas Steam Boilers (Single Phase)	Less than 300,000 Btu/h	75%	
Gas Packaged Boilers	300,000 Btu/h or larger		80%
Other Boilers (Single Phase)	Less than 300,000 Btu/h	80%	
Oil Package Boilers	300,000 Btu/h or larger		83%

Non-central gas space heaters shall be certified to have AFUE values greater than or equal to those listed in Table 4-2 below:

Table 4-2 – Minimum Heating Efficiency for Non-Ducted, Non-Central Gas Fired Heating Equipment

Source: California Appliance Efficiency Regulations

Type	Size	AFUE
Wall Furnace (fan type)	up to 42,000 Btu/hour	73%
	over 42,000 Btu/hour	74%
Wall Furnace (gravity type)	up to 10,000 Btu/hour	59%
	over 10,000 Btu/hour up to 12,000 Btu/hour	60%
	over 12,000 Btu/hour up to 15,000 Btu/hour	61%
	over 15,000 Btu/hour up to 19,000 Btu/hour	62%
	over 19,000 Btu/hour up to 27,000 Btu/hour	63%
	over 27,000 Btu/hour up to 46,000 Btu/hour	64%
	over 46,000 Btu/hour	65%
Floor Furnace	up to 37,000 Btu/hour	56%
	over 37,000 Btu/hour	57%
Room Heater	up to 18,000 Btu/hour	57%
	over 18,000 Btu/hour up to 20,000 Btu/hour	58%
	over 20,000 Btu/hour up to 27,000 Btu/hour	63%
	over 27,000 Btu/hour up to 46,000 Btu/hour	64%
	over 46,000 Btu/hour	65%

The AFUE of mobile home furnaces shall be certified not to be less than 75 percent.

Heat Pumps and Electric Heating

Table 4-3 summarizes the energy efficiency requirements for heat pumps. Note that the minimum heating seasonal performance factor (HSPF) changes on January 23, 2006 for single phase air source heat pumps.

Table 4-3 – Minimum Heating Efficiency for Heat Pumps
Source: California Appliance Efficiency Regulations

Equipment Type	Appliance Efficiency Regulations Reference	Configuration / Size	Minimum Heating Efficiency
Room heat pumps	Table B-2	Any	Cooling standard only
Packaged terminal heat pumps	Table B-3	Any	1.3 +[0.00016 x Cap)] COP
Single phase air source heat pumps (NAECA)	Table C-2	< 65,000 Btu/h Cooling Capacity	Packaged 6.6 (7.7) HSPF [1] Split 6.8 (7.7) HSPF [1]
		Through-the-wall < 65,000 Btu/h Cooling Capacity	See Appliance Efficiency Regulations
		Small duct high velocity < 65,000 Btu/h Cooling Capacity	See Appliance Efficiency Regulations
Three-phase air source heat pumps	Table C-3	< 65,000 Btu/h	See Appliance Efficiency Regulations
Water-source heat pumps	Table C-5	< 135,000 Btu/h	4.2 COP
		≥ 135,000 Btu/h, < 240,000 Btu/h	2.9 COP
1. HSPF values in parentheses indicate minimum efficiency effective January 23, 2006.			

There are no minimum appliance efficiency standards for electric-resistance or electric-radiant heating systems.

Heat Pump Controls

§112(b) , EXCEPTION to §150(i)

Any heat pump with supplementary electric resistance heating must have controls that have two capabilities to limit the electric resistance heating. The first is to set the cut-on and cut-off temperatures for compression and supplementary heating at different levels. For example, if the heat pump begins heating when the inside temperature reaches 68 ºF, the electric resistance heating is set to come on if the temperature gets below 65 ºF; and there is an opposite off mode such that if the heat pump shuts off when the temperature reaches 72 ºF, the back-up heating shuts off at 68ºF.

The second control capability prevents the supplementary electric resistance heater from operating when the heat pump alone can meet the heating load, except during defrost. There is a limited exception to this second function for “smart thermostats” that provide: intelligent recovery, staging, ramping, or another control mechanism that prevents the unnecessary operation of supplementary electric resistance heating when the heat pump alone can meet the heating load.

To meet the setback thermostat requirements, a setback thermostat for a heat pump must be a “smart thermostat” that minimizes the use of supplementary heating during startup and recovery from setbacks.

Note: Room air conditioner heat pumps are not required to comply with setback thermostat requirements.

Equipment Sizing

§150(h)

The Standards do not set limits on the sizing of heating equipment, but they do require that heating loads be calculated for new heating systems. Oversized equipment typically operates less efficiently and can create comfort problems due to excessive cycling and high airflow.

Acceptable load calculation procedures include methods described in the ASHRAE Handbook – Equipment, ASHRAE Handbook – Applications, ASHRAE Handbook – Fundamentals, SMACNA Residential Comfort System Installation Manual, or ACCA Manual J.

The Standards require that the outdoor design conditions for load calculations be selected from Joint Appendix II, and that the indoor design temperature for heating load calculations be 70 ºF. The outdoor design temperature must be no lower than the heating winter median of extremes as listed in the Joint Appendix. If the actual city location for a project is not included in the Joint Appendix, or if the data given for a particular city does not match the conditions at the actual site as well as that given for another nearby city, consult the local building department for guidance.

The minimum size of residential heating systems is regulated by the California Building Code (CBC), Section 310.11. The CBC requires that the heating system be capable of maintaining a temperature of 70ºF at a distance three feet above the floor throughout the conditioned space of the building.

The load calculations must be submitted with compliance documentation when requested by the building department. The load calculations may be prepared by 1) the documentation author and submitted to the mechanical contractor, 2) a mechanical engineer, or 3) the mechanical contractor who is installing the equipment.

Standby Losses and Pilot Lights

§115

Fan-type central furnaces may not have a continuously burning pilot light. This requirement does not apply to wall furnaces, floor furnaces or any gravity type furnace. Household cooking appliances also must not have a continuously burning pilot light except for those without an electrical supply voltage connection and in which each pilot consumes less than 150 Btu/hr.

§112(c)

Larger gas-fired and oil-fired forced air furnaces with input ratings ≥ 225,000 Btu/h (which is bigger than a typical residential furnace) must also have an intermittent ignition or interrupted device (IID), and either power venting or a flue damper. A vent damper is an acceptable alternative to a flue damper for furnaces where combustion air is drawn from the conditioned space. All furnaces with input ratings ≥ 225,000 Btu/h, including electric furnaces, that are not located within the conditioned space must have jacket losses not exceeding 0.75% of the input rating.

4.2.2 Prescriptive Requirements

§151(f) 6. Heating System Type

Prescriptive Package D requires that a gas heating system or a heat pump be installed. The minimum energy efficiency of the heating equipment is specified by the mandatory measures (see above).

Package C allows electric resistance and electric radiant heating, but insulation and other measures are more stringent.

Under the performance compliance method, a small credit is available for electric radiant panel heating systems relative to electric baseboard systems.

4.2.3 Compliance Options

With the performance compliance method, credit can be taken for selecting high efficiency heating equipment, such as a high efficiency furnace or heat pump. With a furnace, for example, the minimum requirement is an AFUE of 78%, but units are available with AFUE of 90% or better.

4.3 Cooling Equipment

This section addresses the requirements for primary cooling equipment.

4.3.1 Mandatory Measures

Equipment Efficiency

§111 and §112(a)

Appliance Efficiency Regulations

The efficiency of most cooling equipment is regulated by NAECA (the federal appliance standard) and the California Appliance Efficiency Regulations. These regulations are not contained in the Building Energy Efficiency standards but rather in separate documents. These regulations are referenced in §111. The Appliance Efficiency Regulations include definitions for all types of equipment. The energy efficiency of larger equipment is regulated by §112(a) of the Standards. See the Nonresidential Compliance Manual for information on larger equipment.

Central, Single Phase Air Conditioners and Air Source Heat Pumps (under 65,000 Btu/h)

The central, single phase air conditioners and air source heat pumps that are most commonly installed in residences have a smaller capacity than 65,000 Btu/h. The Appliance Efficiency Regulations for this equipment require minimum Seasonal Energy Efficiency Ratios (SEER).

The Seasonal Energy Efficiency Ratio of all new central, single phase air conditioners and air source heat pumps with output less than 65,000 Btu/h shall

be certified not to be less than the values listed below. Note that the minimum efficiency for this equipment changes on January 23, 2006.

Table 4-4 – Minimum Cooling Efficiencies for Central Air Conditioners and Heat Pumps
Source: California Appliance Efficiency Regulations

Appliance	Type	SEER	
		Prior to 1/23/06	On and After 1/23/06
Central Air Conditioners	Split System	10.0	13.0
	Single Package	9.7	13.0
Central Air Source Heat Pumps	Split System	10.0	13.0
	Single Package	9.7	13.0

Other Air Conditioners and Heat Pumps

Appliance Efficiency Regulations

The current Appliance Efficiency Regulations for larger central air conditioners and heat pumps, and for all room air conditioners and room air conditioner heat pumps shall be certified by the manufacturer to not to be less than the values listed in Table 4-5 and 4-6.

Table 4-5 – Minimum Cooling Efficiency for Larger Central Air Conditioners and Heat Pumps
Source: California Appliance Efficiency Regulations

Equipment Type	Size Category	EER
Central Air Conditioners	65,000 Btu/h up to 135,000 Btu/h	8.9
Central Air Source Heat Pumps	65,000 Btu/h up to 135,000 Btu/h	8.9
Central Water Source Heat Pumps	Up to 135,000 Btu/h	12.0

Table 4-6 – Minimum Cooling Efficiency for Non-Central Space Cooling Equipment

Including Room Air Conditioners; and Room Air Conditioner Heat Pumps; Package Terminal Air Conditioners (PTAC); Package Terminal Heat Pumps (PTHP);
Source: California Appliance Efficiency Regulations

Equipment Type	Size Category (Input)	Minimum Efficiency
Room Air Conditioners, with Louvered Sides	< 6,000 Btu/h	9.7 EER
	≥6,000 Btu/h and < 8,000 Btu/h	9.7 EER
	≥ 8,000 Btu/h and < 14,000 Btu/h	9.8EER
	≥14,000 Btu/h and < 20,000 Btu/h	9.7 EER
	≥20,000 Btu/h	8.5 EER
Room Air Conditioners, without Louvered Sides	< 6,000 Btu/h	9.0 EER
	≥6,000 Btu/h and < 8,000 Btu/h	9.0 EER
	≥ 8,000 and <20,000 Btu/h	8.5 EER
	≥20,000 Btu/h	8.5 EER
Room Air Conditioner Heat Pumps with Louvered Sides	< 20,000 Btu/h	9.0 EER
	≥ 20,000 Btu/h	8.5 EER
Room Air Conditioner Heat Pumps without Louvered Sides	< 14,000 Btu/h	8.5EER
	≥ 14,000 Btu/h	8.0 EER
Casement-Only Room Air Conditioner	All Capacities	8.7 EER
Casement-Slider Room Air Conditioner	All Capacities	9.5 EER
PTAC and PTHP	≤ 7,000 Btu/h	8.88 EER
	> 7,000 and < 15,000 Btu/h	10.0 – (0.00016 x Cap) EER
	≥ 15,000 Btu/h	7.6 EER

Insulation for Refrigerant Lines in Split System Air Conditioners

§150(j)2
§150(m)9

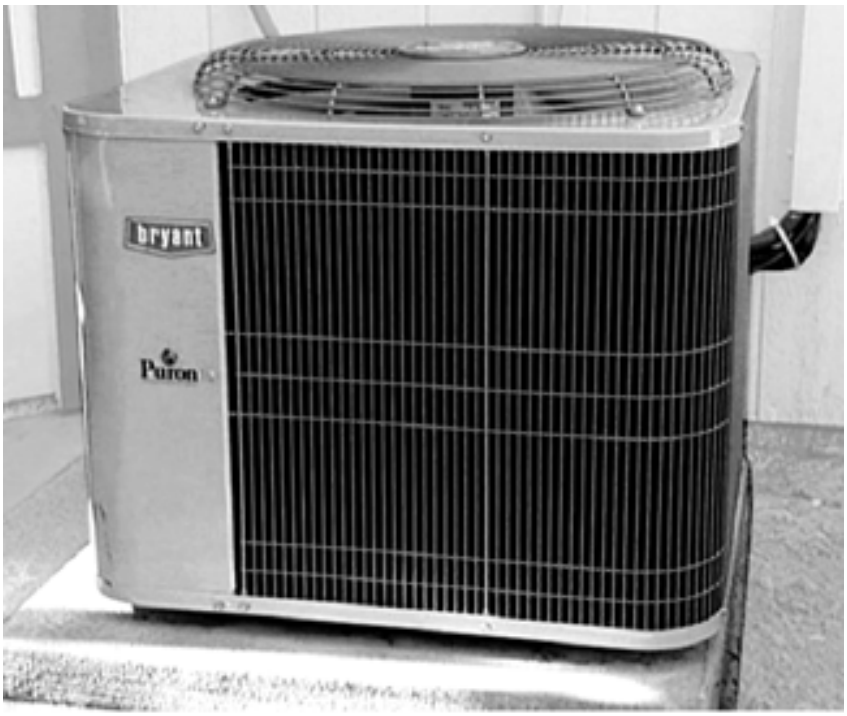

Source: California Energy Commission

Figure 4-1 – Outdoor Compressor/Condenser Unit

Two refrigerant lines connect the indoor and outdoor units of split system air conditioners and heat pumps: the liquid line (the smaller line) and the larger suction (cooling) line. The liquid line is at an elevated temperature, and heat escaping from it is helpful; therefore, it should not be insulated. However, the suction line carries refrigerant vapor that is cooler than ambient in the summer and (with heat pumps) warmer than ambient in the winter. This line, less than or equal to 2 in. in diameter, must be insulated with at least 0.75 in. of insulation per the requirements of §150 (j) 2.

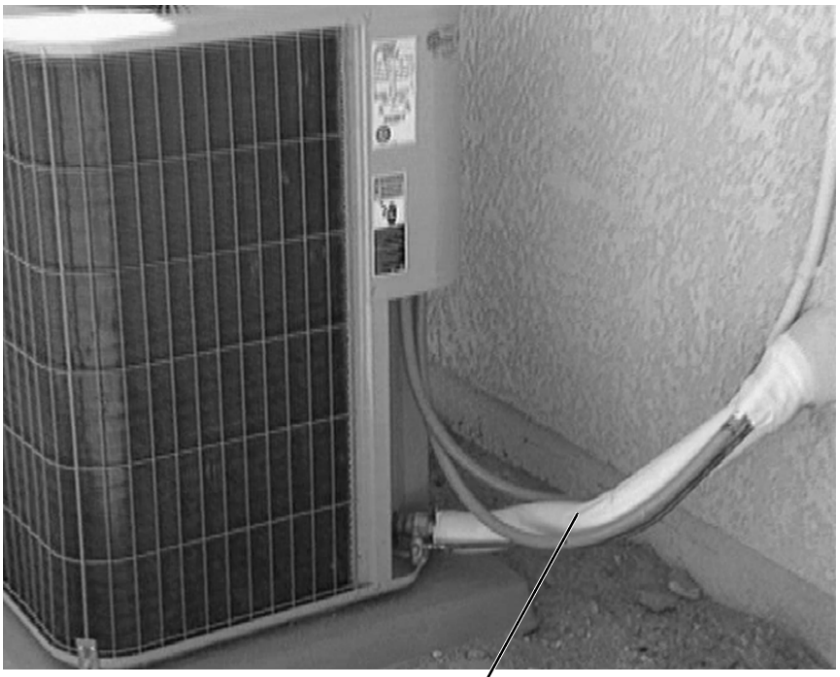

Source: California Energy Commission

Figure 4-2 – Refrigerant Line Insulation

Insulation used with the suction line must be protected from physical damage or from UV deterioration. Pipe insulation in outdoor locations is typically protected by an aluminum or sheet metal jacket, painted canvas, plastic cover, or coating that is water retardant and UV resistant. See §150(m)9 in the Standards. See *Figure 4-1.*

Equipment Sizing

§150(h)

Just as for heating equipment, the Standards do not set mandatory measures for cooling equipment sizing. However, the Standards do offer a compliance credit for properly sized air conditioning equipment when using the computer performance method (Appendix RF in the *Residential ACM Manual*). Avoiding over sizing is especially important for cooling equipment because efficiency degrades when the system cycles on and off frequently. See the Compliance Options section below for more details on the credit.

The Standards also require that cooling load calculations be performed using the ACM Manual calculation (specified in ACM Manual Appendix RF) or other load calculation procedures as listed for heating equipment in Cooling Equipment Sizing section above. Compliance credit is available when equipment is sized according to the ACM Manual calculation, and HERS rater field verification confirms that the installed equipment is consistent with the sizing calculations.
The outdoor design conditions for load calculations must be selected from Joint Appendix II, and the indoor design temperature for cooling load calculations must be 75ºF. The outdoor design temperature must be no higher than the 1.0% Cooling Dry Bulb and Mean Coincident Wet Bulb values.

As for heating calculations, the cooling load calculations must be submitted with compliance documentation when requested by the building department. The load calculations may be prepared by 1) the documentation author and submitted to the mechanical contractor, or 2) a mechanical engineer, or 3) the mechanical contractor who is installing the equipment.

4.3.2 Prescriptive Requirements

§151(f)7

Both prescriptive packages, C and D, require testing of refrigerant charge or installation of a thermostatic expansion valve (TXV) for split system equipment in climate zones 2 and 8 through 15. Package D offers an alternative to testing that requires additional efficiency in other areas.

Refrigerant Charge Measurement

The prescriptive standards require that a HERS rater verify that split system air conditioning and heat pumps have the correct refrigerant charge. The procedures that HERS raters are to follow are documented in Appendix RD in the 2005 *Residential ACM Manual*. Packaged units are not required to have refrigerant charge measurement.

The measurement and regulation of refrigerant charge can significantly improve the performance of air conditioning equipment. Refrigerants are the working fluids in air conditioning and heat pumps systems that absorb heat energy from one area (the evaporator) and transfer it to another (the condenser).

Refrigerant charge refers to the actual amount of refrigerant present in the system. Excessive refrigerant charge can lead to premature compressor failure and insufficient charge can cause compressors to overheat.

Thermostatic Expansion Valves

Option 1: TXVs may be used as an alternative to diagnostic testing of the refrigerant charge in split system air conditioning and heat pumps. TXVs are used in air conditioners or heat pumps to control the flow of refrigerant into the evaporator in response to the superheat of the refrigerant leaving it. The valve is placed upstream from the evaporator inlet and is connected to a temperature-sensing bulb. As the gaseous refrigerant leaves the evaporator, the TXV senses its temperature and pressure and adjusts the flow rate to maintain proper conditions. Eligible systems must provide a removable door for valve verification by a certified HERS rater. An access door (or removable panel) is not required if the TXV is in a readily accessible location. Readily accessible means capable of being reached quickly for operation, repair, or inspection, without requiring climbing or removing obstacles or resorting to access equipment. The body of the TXV can be anywhere that is warmer than the location of the sensing bulb (including outside the plenum). It is preferable that the refrigerant manifold be close to the TXV body.

Option 2: Visually verify that a sensing bulb is running from inside the unit and that it is visible outside of the unit. You do not need to open the unit to complete

this verification. Please note that the sensing bulb will be attached to the suction line and should be covered by insulation. You will need to verify the sensing bulb by either removing sufficient insulation to see it or by feel.

Option 3: This option is designed to allow a rater to verify a TXV based upon manufacturer's nameplate data. To use this option three steps must be completed.

Step One: Observe that for a particular brand and model that the manufacturer has installed a TXV at the factory. This may be accomplished by the air conditioner distributor or installer taking the cover off of one unit per subdivision and showing the rater that the TXV has been installed.

Step Two: Determine that the manufacturer's nameplate on the coil indicates that a TXV has been factory installed. The rater may ask for clarification of the nameplate information from the distributor.

Step Three: Verifythat the nameplate information on each unit being inspected indicates that a TXV has been installed in that unit.

Source: California Energy Commission

Figure 4-3 – Checking Refrigerant Charge

Alternative to Package D Refrigerant Charge Testing

As described in the footnotes to Table 151-C of the Standards (Appendix B of this document), measurement of refrigerant charge or a TXV is not required if additional savings measures are implemented. The required measures vary by climate zone. For example, in climate zones 2, 8, and 9, a glazing U-factor of 0.38 and glazing SHGC of 0.31 may be substituted for the field verification requirements. In the hotter climates, higher air conditioner efficiency is required in addition to better glazing, and in colder climates, higher efficiency heating efficiency is required.

Table 4-7 – Alternatives to Duct Sealing and Refrigerant Charge Measurement in New Construction Package D only (gas heat or heat pump space heating)

Climate Zone	Alternative to Duct Sealing and Refrigerant Charge Measurement/TXV All other requirements of Package D must be met in all climate zones
CZ 1, 16	Glazing U-factor ≤ 0.42 U, Furnace ≥ 90% AFUE or heat pump ≥7.6 HSPF.
CZ 2, 8, 9	Glazing U-factor ≤ 0.38 and SHGC ≤ 0.31
CZ 3, 5, 6, 7	Glazing U-factor ≤ 0.42
CZ 4	Glazing U-factor≤ 0.38 and SHGC ≤ 0.36
CZ 10, 11, 12	Glazing U-factor ≤ 0.38 and SHGC ≤ 0.31 Air conditioning ≥ SEER 13
CZ 13	Glazing U-factor ≤ 0.38 and SHGC ≤ 0.31 Air conditioning ≥ SEER 15
CZ 14	Glazing U-factor ≤ 0.38 and SHGC ≤ 0.31 Air conditioning ≥ SEER 16

4.3.3 Compliance Options

There are several options for receiving compliance credit related to the cooling system. These credits are available through the performance compliance method.

High Efficiency Air Conditioner

Air conditioner designs are available with efficiencies equivalent to a SEER up to 18.0, which is significantly better than the minimum federal efficiency of SEER 10.0 (or 13.0 starting January 23, 2006). Savings can be achieved by choosing an air conditioner that exceeds the minimum efficiency requirements.

The EER is the full load efficiency at specific operating conditions. It is possible that two units with the same SEER can have different EERs. Using the performance compliance method, credit is available for specifying an air conditioner with an EER greater than 10 (see the compliance program vendor's compliance supplement). When credit is taken for a high EER, field verification by a HERS rater is required (see Appendix RI in the *Residential ACM Manual*).

Air Handler Watt Draw

Credit is also available for demonstrating that a high efficiency fan and duct system with a low wattage fan has been installed. This credit can be achieved by selecting a unit with a high efficiency air handler fan and/or careful attention to efficient duct design. The performance compliance method allows the user's proposed fan power to be entered into the program, and credit will be earned if it is lower than the default of 0.015 watts per Btu of rated cooling capacity (see the compliance program vendor's supplement). After installation, the contractor must test the actual fan power of each system using the procedure in Appendix RE of the *Residential ACM Manual* and show that it is equal or less than what was proposed in the compliance analysis. This credit requires verification by a HERS rater.

As mentioned above in the Compliance Options section for heating equipment, air handlers with Energy Conservation Measures can be much more efficient than standard motors.

Adequate Airflow

In California's dry climates, adequate air handler airflow rates are required to deliver air conditioner rated sensible capacity, total capacity, and efficiency. Low airflow rates can also lead to ice buildup on the cooling coil and to compressor failure. The Standards offer a compliance credit for adequate airflow, which is defined as a minimum of 400 cfm per ton (operating normally with a wet cooling coil or 450 cfm per ton when tested with a dry cooling coil). The air flow for each system must be tested using one of the methods described in Appendix RE of the *Residential ACM Manual*. When an adequate airflow credit is claimed, the duct design, layout, and calculations must be submitted to the local enforcement agency and to a certified HERS rater. This credit requires verification by a HERS rater.

Maximum Cooling Capacity

With the performance method, credit is offered for cooling systems that are smaller than a prescribed criteria calculated for each proposed design. To receive credit, the installed air conditioner must be no bigger than the limit calculated by the compliance software. This credit is available only in combination with the credits for duct sealing and testing, adequate airflow, and refrigerant charge testing or TXV.

An electrical input exception may be used to achieve the same credit allowed for the maximum cooling capacity for compliance software credit. This exception allows a large equipment size to be installed if it does not use more power than the properly sized equipment. Requirements for this alternative are described in Appendix RF in the *Residential ACM Manual*.

4.4 Air Distribution Ducts and Plenums

Ducts have a big impact on HVAC system efficiency; therefore, air distribution systems face a number of mandatory measures and prescriptive requirements. The prescriptive requirements say that ducts be sealed and tested in all climates. There are also a number of compliance credits available related to duct design.

Duct efficiency is affected by the following parameters:

- duct location (attic, crawlspace, basement, inside conditioned space, or other),
- specifics of the unconditioned space, e.g., presence of a radiant barrier,
- duct insulation,
- duct surface area, and

- air leakage of the duct system.

In performance calculations, duct efficiency can be calculated in one of two ways: (1) default input assumptions or (2) diagnostic measurement values. The computer program will use default assumptions for the proposed design when the user does not intend to make improvements in duct efficiency. There is a compliance penalty if the ducts are not sealed and tested.

4.4.1 Mandatory Measures

Minimum Insulation

§150(m)1

In all cases, unless ducts are enclosed entirely in conditioned space, the minimum allowed duct insulation value is R-4.2. Note that higher values may be required by the prescriptive requirements as described below.

§150(m)5

For the purpose of determining installed R-value of duct wrap, the installed thickness of insulation must be assumed to be 75 % of the nominal thickness due to compression.

Connections and Closures

§150(m)1

§150(m)2

§150(m)3

The Standards set a number of mandatory measures related to duct connections and closures. These measures address both the materials used for duct sealing and the methods that may be used. Refer to the sections of the Standards listed above for details.

Connections between metal ducts and the inner core of flexible ducts must be mechanically fastened.

Openings must be sealed with mastic, tape, or other duct closure systems that meet the applicable requirements of UL 181, UL 181A, UL 181B or with aerosol sealant systems that meet the requirements of UL 723.

If mastic or tape is used to seal openings greater than 1/4 in., the combination of mastic and either mesh or tape must be used.

Building spaces such as cavities between walls, support platforms for air handlers, and plenums defined or constructed with materials other than sealed sheet metal, duct board, or flexible duct must not be used for conveying conditioned air including return air and supply air. The practice of using drywall materials as the interior surface of a return plenum is not allowed. Building cavities and support platforms may contain ducts. Ducts installed in cavities and support platforms must not be compressed to cause reductions in the cross sectional area of the ducts. Although a HERS rater may examine this as a part

of his or her responsibilities when involved in a project, the enforcement of these minimum standards for ducts is the responsibility of the building official.

Example 4-1

Question

I am installing a fan coil in the hallway of a multifamily dwelling unit in a space constructed of sheetrock. The sheetrocked space is formed by the original hallway ceiling at the top, the hallway sidewalls, and sheetrock across the bottom of the space with a return grill mounted in the bottom sheetrock. Does a duct have to be installed connecting the fan coil return to the return register?

Answer

This type of installation may be used only when a fan-coil unit is installed in a sheetrocked space that is constructed and sealed to meet the California Building Code (CBC) Title 24, Part 2, Volume 1. Section 310.2.2 of the CBC states that "walls and floors separating dwelling units in the same building … shall not be of less than one-hour fire-resistance construction between two dwelling units." Section 709.3.2.2 of the CBC states that "when a fire-resistive floor or floor ceiling assemblies are required, voids and intersections of these assemblies shall be sealed with an approved material. "

Also, Section 150(m) of the Standards states as follows:

"Building cavities, support platforms for air handlers, and plenums defined or constructed with materials other than sealed sheet metal, duct board or flexible duct shall not be used for conveying conditioned air."

There are two acceptable methods of complying with section 150 (m) for the fan coil space that is the subject of the question.

1. A return duct is installed between the fan coil and the return register.

2. If the builder demonstrates that the sheetrocked space in which the fan coil is installed is not a plenum, the duct in method "1" is not required.

The California Mechanical Code has the following definition of a plenum:

"PLENUM is an air compartment or chamber including uninhabited crawl spaces, areas above ceilings or below a floor, including air spaces below raised floors of computer/data processing centers, or attic spaces, to which one or more ducts are connected and which forms part of either the supply air, return air or exhaust air system, other than the occupied space being conditioned."

To demonstrate the sheetrocked space in which the fan coil is installed is not a plenum, the builder must demonstrate that it is part of the conditioned space. This fan coil space can be considered part of the conditioned space if it is demonstrated that the space

1. is within the building envelope, and

2. air leakage pathways (e.g., infiltration connections to building cavities) are sealed such that the space is more connected to the inside of the envelope than to outside the envelope.

There are two ways of demonstrating that air leakage pathways are properly sealed.

1. The easiest way is to construct the fan coil space so that an inspector is able to visually determine that the space has no leakage paths. No testing is required for this approach. The inspector must be able to inspect all joints and seams in the sheetrock, particularly horizontal seams that are above and below the sheetrocked bottom of the space, and to verify that no horizontal seams are behind the sheetrocked bottom or the mounting supports for the sheetrocked bottom of the space. The supports for the sheetrocked bottom must be mounted on the surface of the walls of the space and have sheetrock between the support and the wall framing.

Any horizontal seam in the wall-mounted sheetrock must be a minimum of ½ inch below the lower surface of the sheetrocked bottom. Also any horizontal seam in the wall of the space above the sheetrocked bottom must be a minimum of 1½ inches above the top of the mounting wood or metal brackets. This spacing is required to allow adequate room for taping the seam. All vertical sheetrock seams must be taped and sealed with joint compound or equivalent prior to the installation of the wood or metal brackets that support the dropped ceiling.

All penetrations of this space, for example refrigerant lines, water lines for hydronic heating, electrical (line and low voltage) lines, sprinkler lines, and ducts must be sealed with fire caulk or other approved sealing material as required by the building official.

Ductwork that penetrates the sheetrock must use a collar that goes entirely through the wall cavity. These collars must extend at least two inches past the sheetrock on each side of the wall cavity. The collars must then be sealed to the sheetrock on each side of the wall. The ducts must be attached and sealed to the collar.

2. The other way to demonstrate there is no air leakage pathway that is more connected to the outside than to the inside is to test the leakage of the sheetrocked space as though it were a duct. For this test, the space is sealed off and tested with duct pressurization equipment at a pressure of 25 Pa. If the tested leakage from this space is 10 cubic feet per minute or less, then the space may be considered to have no substantial leakage to outside the conditioned space (effectively zero within the instrumentation accuracy). The results of this test must be reported to the building official. See the following three figures.

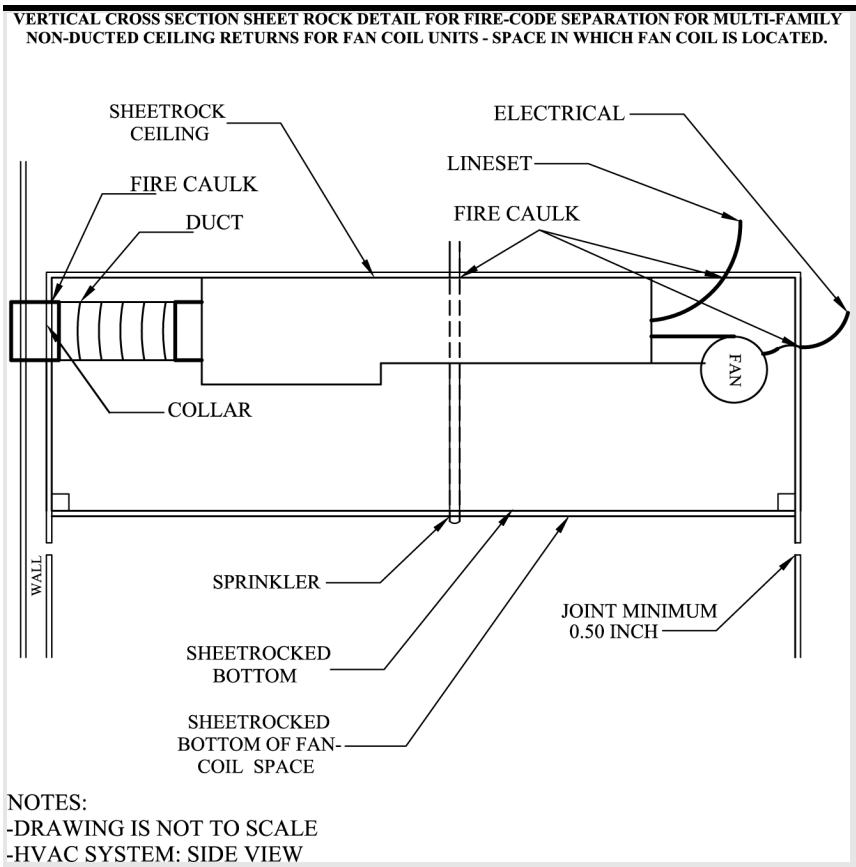

Figure 1 *Example of non-ducted ceiling returns for fan coil to meet fire code*

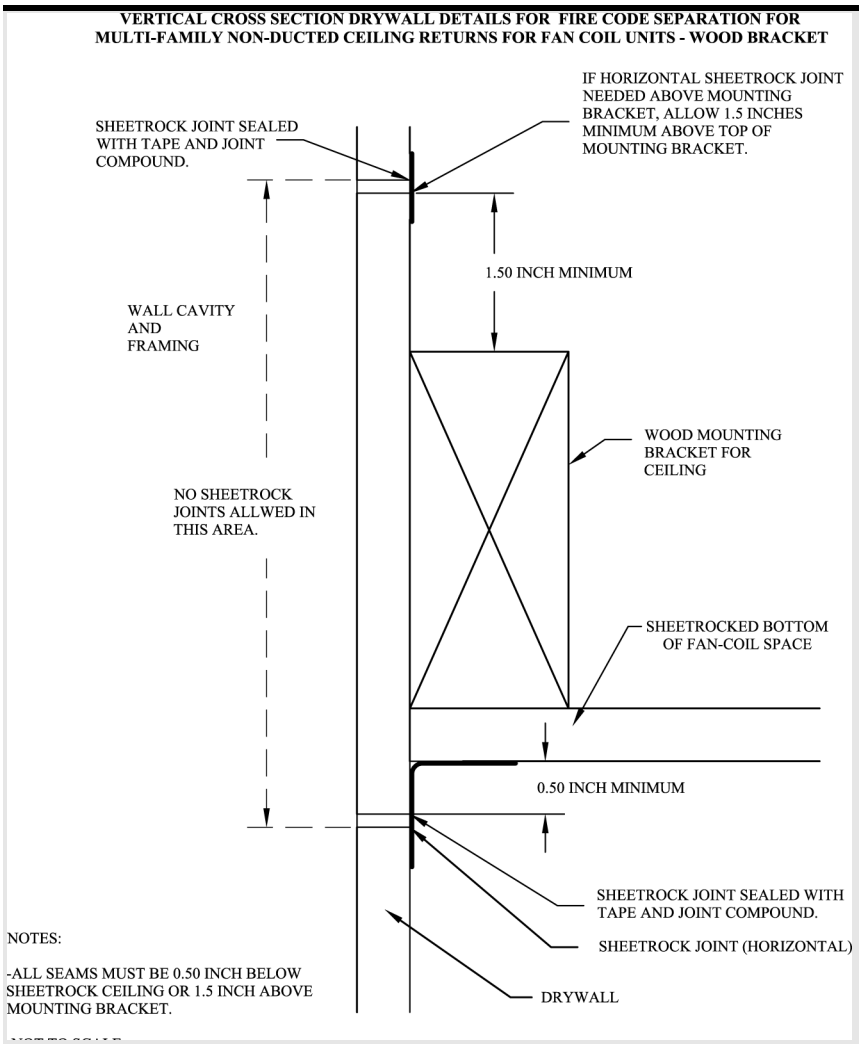

Figure 2 *Example of wood bracket support to meet fire code separation*

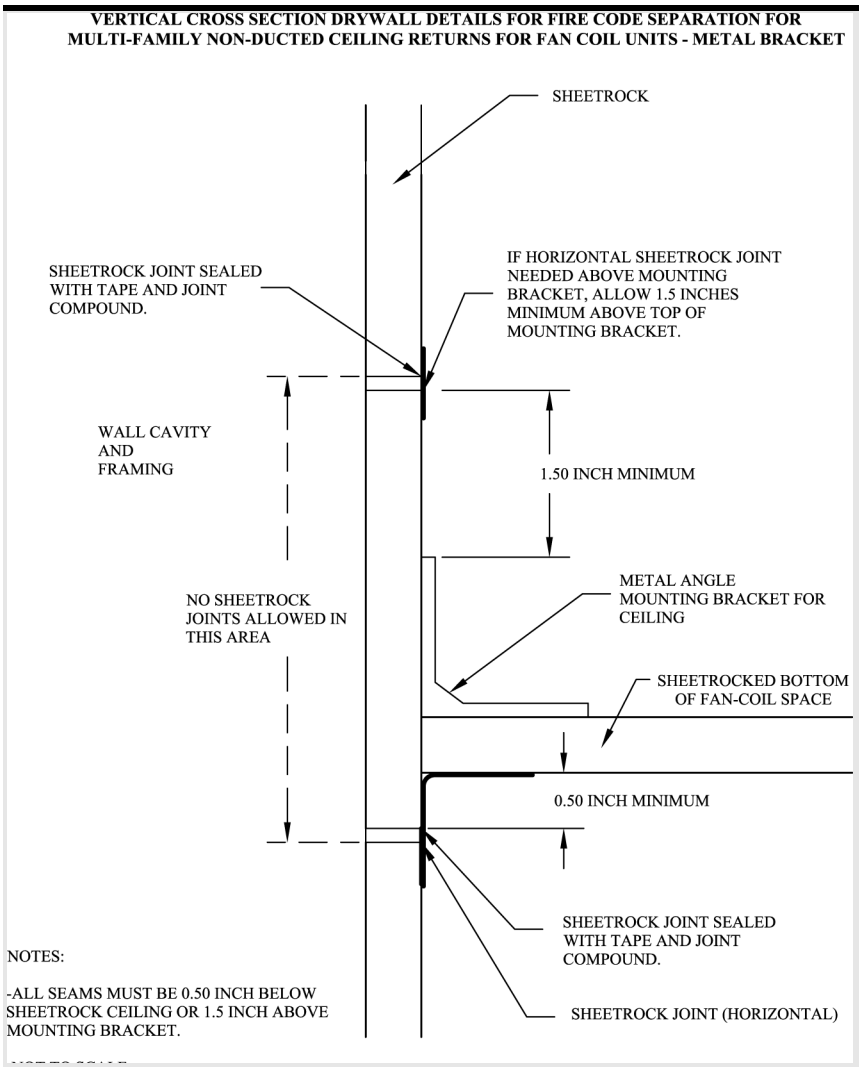

Figure 3 *Example of metal bracket support to meet fire code separation*

Ducts and fans integral to a wood heater or fireplace are exempt from these insulation and installation requirements.

§150(m)2D

§150(m)3D

Duct systems may not use cloth-back, rubber-adhesive duct tape unless it is installed in combination with mastic and drawbands. The enforcement of these minimum standards is the responsibility of the building official.

Product Markings

§150(m)6

Insulated flexible duct products installed to meet this requirement must include labels, in maximum intervals of three feet, showing the R-value for the duct insulation (excluding air films, vapor barriers, or other duct components), based on the tests and thickness specified in §150(m).

Dampers to Prevent Air Leakage

§150(m)7

Fan systems that exhaust air from the building to the outside must be provided with back draft or automatic dampers.

§150(m)8

Gravity ventilating systems must have an automatic or readily accessible, manually-operated damper in all openings to the outside, except combustion inlet and outlet air openings and elevator shaft vents. This includes clothes dryer exhaust vents when installed in conditioned space.

Protection of Insulation

§150(m)9

Insulation must be protected from damage, including that due to sunlight, moisture, equipment maintenance, and wind but not limited to the following: Insulation exposed to weather must be suitable for outdoor service e.g., protected by aluminum, sheet metal, painted canvas, or plastic cover. Cellular foam insulation shall be protected as above or painted with a coating that is water retardant and provides shielding from solar radiation that can cause degradation of the material.

Ducts in Concrete Slab

Ducts located in a concrete slab must have R-4.2 insulation, but other issues will come into play. If ducts are located in the soil beneath the slab or embedded in the slab, the insulation material should be designed and rated for such installation. Insulation installed in below-grade applications should resist moisture penetration (closed cell foam is one moisture-resistant product). Common pre-manufactured duct systems are not suitable for below-grade installations. If concrete is to be poured directly over the ducts, then the duct construction and insulation system should be sturdy enough to resist the pressure and not collapse. Insulation should be of a type that will not compress, or it should be located inside a rigid duct enclosure. The only time that common flex ducts are suitable in a below-grade application is when a channel is provided in the slab.

4.4.2 Prescriptive Requirements

Duct Insulation

§151(f)10

For Package C, the duct insulation requirement is R-8 in all climate zones. For Package D, the requirement varies between R-4.2 and R-8.0 depending on climate zone. See standards Table 151-C (reproduced in Appendix B of this document) for details.

Duct Leakage

§151(f)10

Duct sealing, including field verification and diagnostic testing, is required in all climate zones in both prescriptive packages C and D. The details of the testing methods are covered in Appendix RC in the *Residential ACM Manual*. The bottom line requirement for new duct systems is that leakage not exceed 6% of the supply air flow. (Note that the requirement is slightly less stringent for testing of existing duct systems as described in Chapter 8, Additions and Alterations.)

To comply with the duct sealing requirement, the installer must first perform the tests and document the results in the appropriate portion of the CF-6R form. In addition, a HERS rater must provide independent diagnostic testing and verification and then record the findings on the CF-4R form.

There are two alternatives to the duct testing requirement. The first is to meet the alternative Package D requirements that are listed in the notes that follow Table 151-C in the Standards (or Appendix B of this document). These alternative packages contain more stringent window and HVAC efficiency requirements as a tradeoff for not performing duct testing. For example, in climate zones 10, 11, and 12, the alternative package sets the maximum window U-factor at 0.38 (vs. 0.57), the maximum SHGC at 0.31 (vs. 0.40), and the minimum SEER at 13.0 (vs. mandatory minimums that vary by type and size).

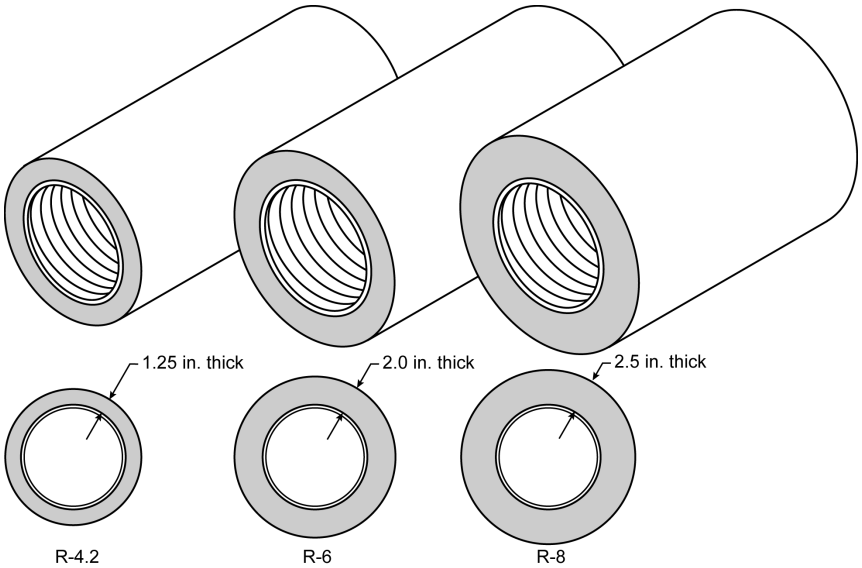

Figure 4-4 – R-4.2, R-6, and R-8 Ducts

The second alternative to duct testing is to use the performance compliance method. In this case, the computer program will automatically assume that the standard design (baseline) has been tested and sealed, while the proposed design will default to a higher leakage value.

4.4.3 Compliance Options

The Standards provide credit for several compliance options related to duct design and construction. These options are described below along with some general duct construction guidelines.

Supply Duct Location

There are three ways to achieve credit for favorable duct location when using the performance compliance method.

First, credit is available if no more than 12 linear feet of supply duct are outside conditioned space. This total must include the air handler and plenum length. This credit results in a reduction of duct surface area in the computer compliance programs. This option requires field verification by a HERS rater.

The second alternative applies when 100% of the supply ducts are located in either the crawlspace or the basement rather than in the attic. To achieve this credit, a duct layout must be included in the plans showing that all supply registers are located in the floor (or at least no more than 2 feet above the floor). This option does not require field verification by a HERS rater.

Third, credit for a good design is available through the *Diagnostic Supply Duct Location, Surface Area, and R-value* compliance option, which is described below. This option requires field verification by a HERS rater.

Note that there is no compliance credit provided for choosing a heating system such as a wall furnace, floor heater, or room heater even though those systems typically have no ducts. For these cases, the standard design in the compliance calculation uses the same type of system and also has no ducts. However, other systems, such as hydronic heating systems with a central heater or boiler and multiple terminal units, are considered central HVAC systems that are compared to a ducted system in the *Standard Design*. If the hydronic system has no ducts, there may be a significant energy credit through the performance method.

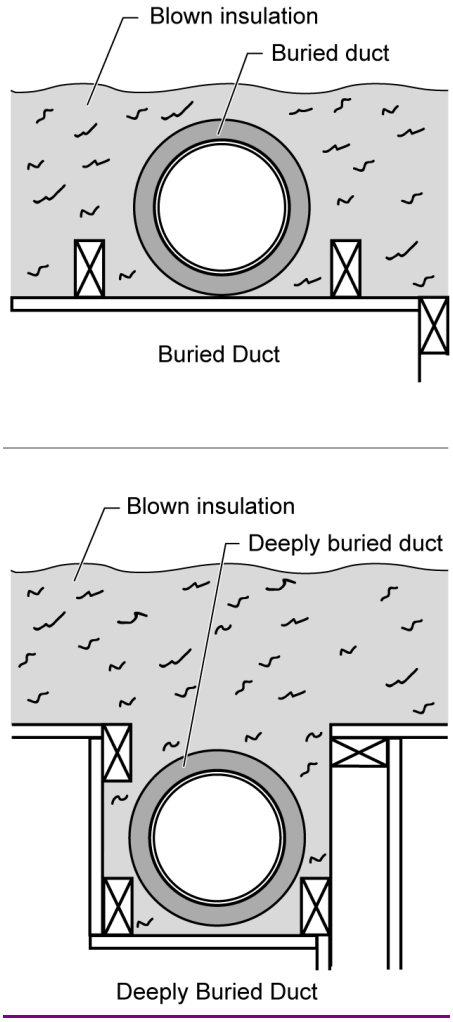

Figure 4-5 – Example: Buried Ducts on Ceiling and Deeply Buried Ducts

Duct Insulation

Performance credit is also available if all of the ducts are insulated to a level higher than required by the prescriptive package. If ducts with multiple R-values are installed, the lowest duct R-value must be used for the entire duct system. However, the air handler, plenum, connectors, and boots can be insulated to the mandatory minimum R-value.

As an alternative when there is a mix of duct insulation R-values, credit is available through the method described in the next section.

Diagnostic Supply Duct Location, Surface Area, and R-value

This compliance option allows the designer to take credit for good duct design, including designs that do not meet the criteria for the duct location and/or insulation compliance options described above. This method requires that the designer enter characteristics of all supply ducts that are not located within conditioned space. The information required includes the length, diameter,

insulation R-value, and location of all supply ducts. This method will result in a credit if the proposed duct system is better than the standard design, which exactly meets the prescriptive insulation requirement and has supply duct surface area set at 27% of floor area.

In order to claim this credit, the duct system design must be documented on the plans, and the installation must be certified by the installer on the CF-6R form and verified by a HERS rater on the CF-4R form. Details of this compliance option are described in Chapter 4 of the *Residential ACM Manual,* and verification procedures are described in Appendix RC of the same document.

This compliance option also allows credit for the special case of ducts that are buried by blown attic insulation. For ducts that lie on the ceiling (or within 3.5 in. of the ceiling), the effective R-value depends on the duct size and the depth of ceiling insulation. This case is referred to as *Buried Ducts on the Ceiling.* For the case of *Deeply Buried Ducts,* which are ducts that are enclosed in a lowered portion of the ceiling and completely covered by attic insulation, then the effective R-value is simply R-25 where the attic insulation is fiberglass and R-31 for cellulose attic insulation. In order to take credit for buried ducts, the system must have been diagnostically tested according to Appendix RC in the *Residential ACM Manual* and meet the requirements for high insulation installation quality in Appendix RH.

Ducts in Attics with Radiant Barriers

Installation of a radiant barrier in the attic increases the duct efficiency by lowering attic summer temperatures. Compliance credit for radiant barriers requires listing of the radiant barrier in the *Special Features and Modeling Assumptions* to aid the local enforcement agency's inspections. Compliance credit for a radiant barrier does not require HERS rater verification.

Duct Installation Standards

The mandatory duct construction measures referenced earlier state that duct installations must comply with California Mechanical Code Sections 601, 602, 603, 604, 605, and Standard 6-5, as well as the requirements of Title 24. Some of the highlights of these requirements are listed in this section along with some guidance on good construction practice.

Tapes and Clamps

- All tapes and clamps must meet the requirements of Section 150 (m) of the Standards.
- Cloth-back rubber-adhesive tapes must be used only in combination with mastic.

All joints must be mechanically fastened

- For residential round metal ducts, installers must overlap the joint by at least 1½ in. and use three sheet metal screws equally spaced around the joint (see Figure 4-6).

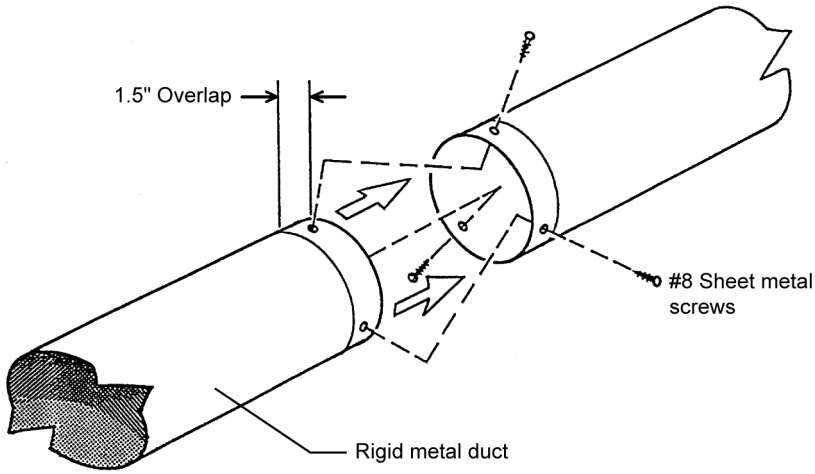

Source: Richard Heath & Associates/Pacific Gas & Electric

Figure 4-6 – Connecting Round Metallic Ducts

- For round non-metallic flex ducts, installers must insert the core over the metal collar or fitting by at least 1 in. This connection may be completed with either mesh, mastic and a clamp, or two wraps of tape and a clamp.

For the mesh and mastic connection, the installer must first tighten the clamp over the overlapping section of the core, apply a coat of mastic covering both the metal collar and the core by at least 1 in., then firmly press the fiber mesh into the mastic and cover with a second coat of mastic over the fiber mesh (see Figure 4-7).

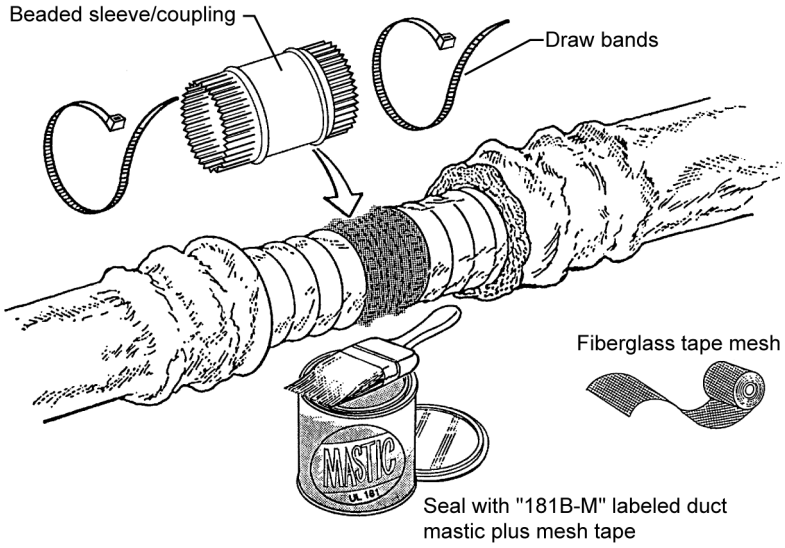

Source: Richard Heath & Associates/Pacific Gas & Electric

Figure 4-7 – Connecting Flex Ducts Using Mastic and Mesh

For the tape connection first apply at least two wraps of tape covering both the core and the metal collar by at least 1 in., then tighten the clamp over the overlapping section of the core (see Figure 4-8).

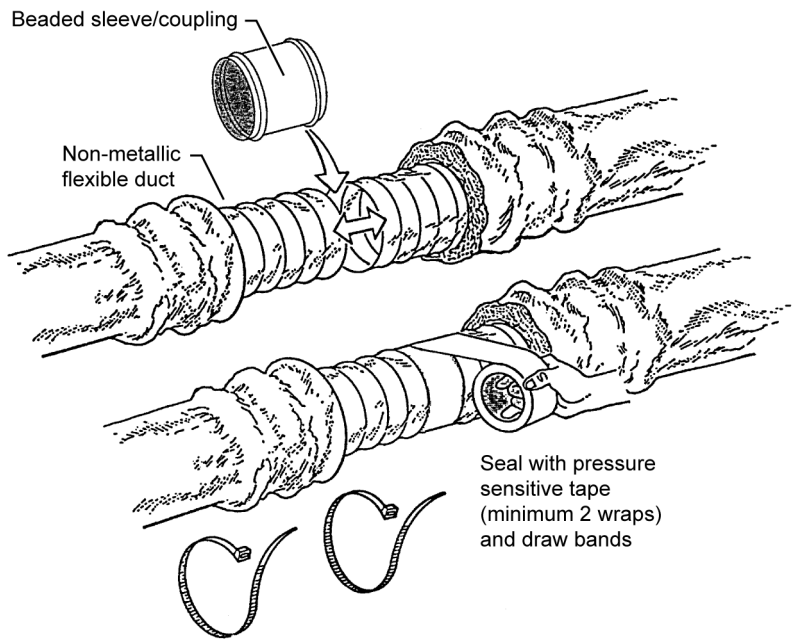

Source: Richard Heath & Associates/Pacific Gas & Electric

Figure 4-8 –Connecting Flex Ducts Using Tape and Clamps

All joints must be made airtight in accordance to §150 (m)

- Seal with mastic, tape, aerosol sealant, or other duct-closure system that meets the applicable requirements of UL 181, UL 181A, UL 181B, or UL 723. Duct systems shall not use cloth-back, rubber-adhesive duct tape regardless of UL designation, unless it is installed in combination with mastic and clamps. The Energy Commission has approved a cloth-back duct tape with a special butyl adhesive manufactured by Tyco and sold as
  Polyken 558CA or Nashua 558CA. This tape passed Lawrence Berkeley Laboratory tests comparable to those that cloth-back rubber-adhesive duct tapes failed. The Tyco tape is allowed to be used to seal flex duct to fittings without being in combination with mastic. This tape cannot be used to seal other duct system joints, such as the attachment of fittings to plenums and junction boxes.
  It has on its backing the phrase "CEC approved," a drawing of a fitting to plenum joint in a red circle with a slash through it (the international symbol of prohibition), and a statement that it can not be used to seal fitting to plenum and junction box joints.
- Mastic and mesh should be used where round or oval ducts join flat or round plenums (see Figure 4-9).

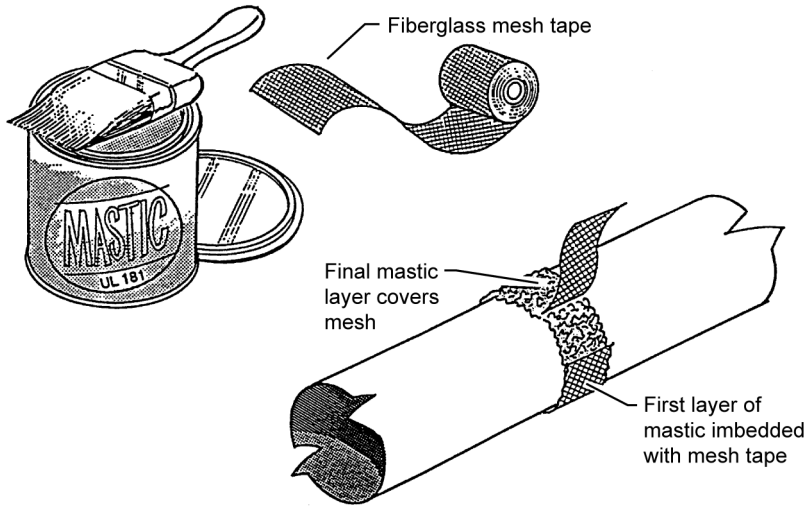

Source: Richard Heath & Associates/Pacific Gas & Electric

Figure 4-9 – Sealing Metallic Ducts with Mastic and Mesh

All ducts must be adequately supported

- Both rigid duct and flex duct may be supported on rigid building materials between ceiling joists or on ceiling joists.
- For rigid round metal ducts that are suspended from above, hangers must occur 12 ft apart or less (see Figure 4-10).

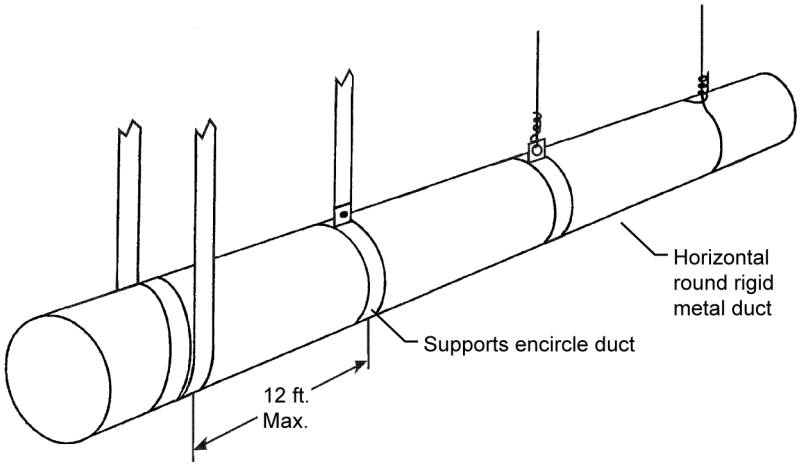

Source: Richard Heath & Associates/Pacific Gas & Electric

Figure 4-10 – Options for Suspending Rigid Round Metal Ducts

- For rectangular metal ducts that are suspended from above, hangers must occur at a minimum of 4 ft to 10 ft depending on the size of the ducts (see Table 6-2-A in the California Mechanical Code). Refer to Figure 4-11.

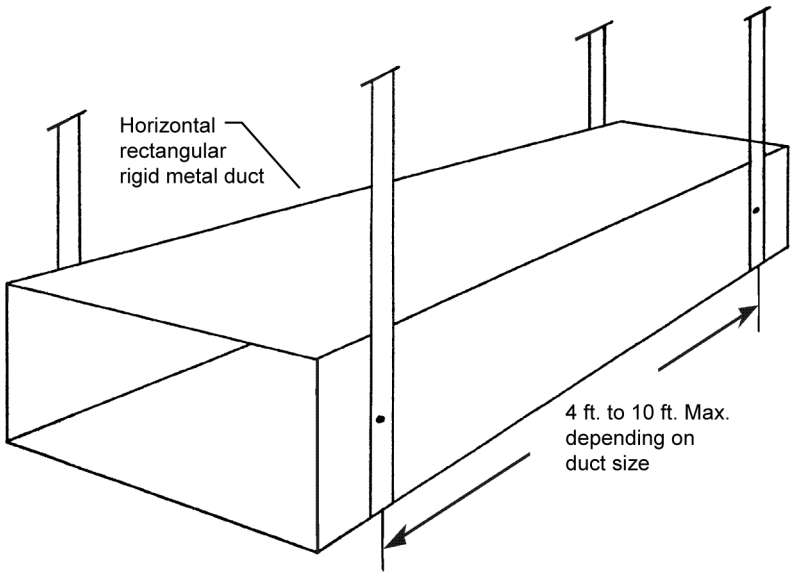

Source: Richard Heath & Associates/Pacific Gas & Electric

Figure 4-11 – Options for Suspending Rectangular Metal Ducts

- For flex ducts that are suspended from above, hangers must occur at 4 ft apart or less and all fittings and accessories must be supported separately by hangers (see Figure 4-12).

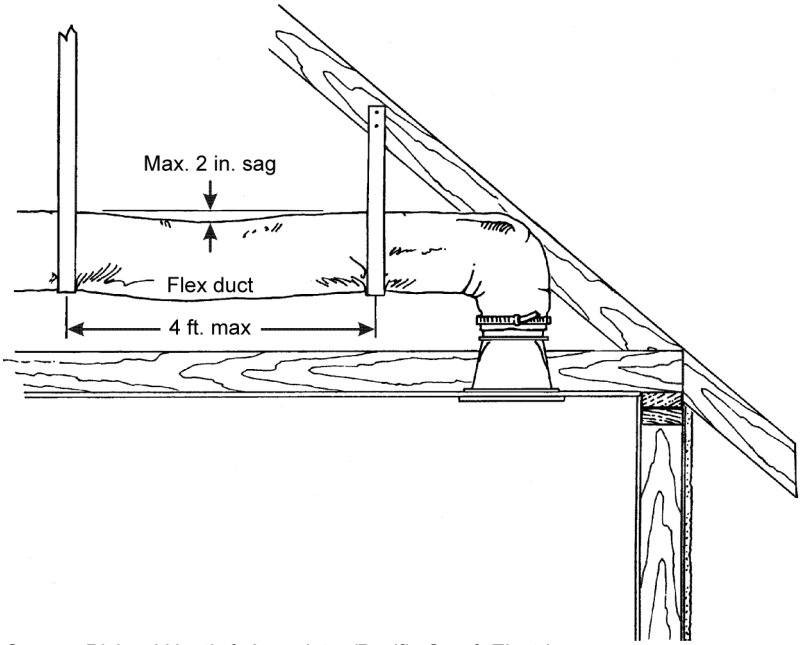

Source: Richard Heath & Associates/Pacific Gas & Electric

Figure 4-12 – Minimum Spacing for Suspended Flex Ducts

- For vertical runs of flex duct, support must occur at 6 ft intervals or less (see Figure 4-13).

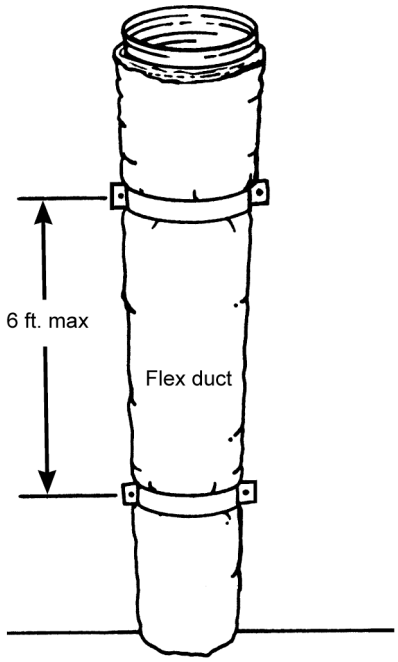

Source: Richard Heath & Associates/Pacific Gas & Electric

Figure 4-13 – Minimum Spacing for Supporting Vertical Flex Ducts

The routing and length of all duct systems can have serious impacts on system performance due to possible increased air flow resistance. The Energy Commission recommends using the minimum length of duct to make connections and the minimum possible number of turns.

For flexible duct, the Energy Commission recommends fully extending the duct by pulling the duct tight and cutting off any excess duct and avoiding bending ducts across sharp corners or compressing them to fit between framing members (see Figure 4-14). Also avoid incidental contact with metal fixtures, pipes, or conduits or installation of the duct near hot equipment such as furnaces, boilers, or steam pipes that are above the recommended flexible duct use temperature.

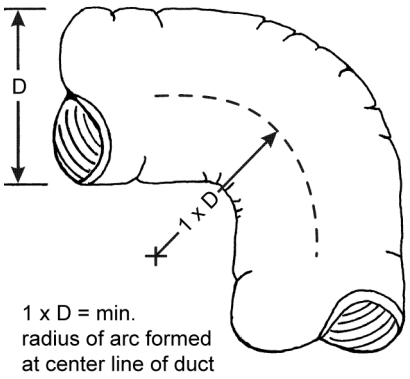

Source: Richard Heath & Associates/Pacific Gas & Electric

Figure 4-14 – Minimizing Radius for Flex Duct Bends

All joints between two sections of duct must be mechanically fastened and substantially airtight. For flex duct this must consist of a metal sleeve no less than 4 in. in length between the two sections of flex duct.

All joints must be properly insulated. For flex ducts this must consist of pulling the insulation and jacket back over the joint and using a clamp or two wraps of tape.

Aerosol sealant injection systems are an alternative that typically combines duct testing and duct sealing in one process. Figure 4-15 shows the computer-controlled injection fan temporarily connected to the supply duct. The plenum is blocked off by sheet metal to prevent sealant from entering the furnace. Supply air registers are also blocked temporarily to keep the sealant out of the house. Note that ducts must still be mechanically fastened even if an aerosol sealant system is used.

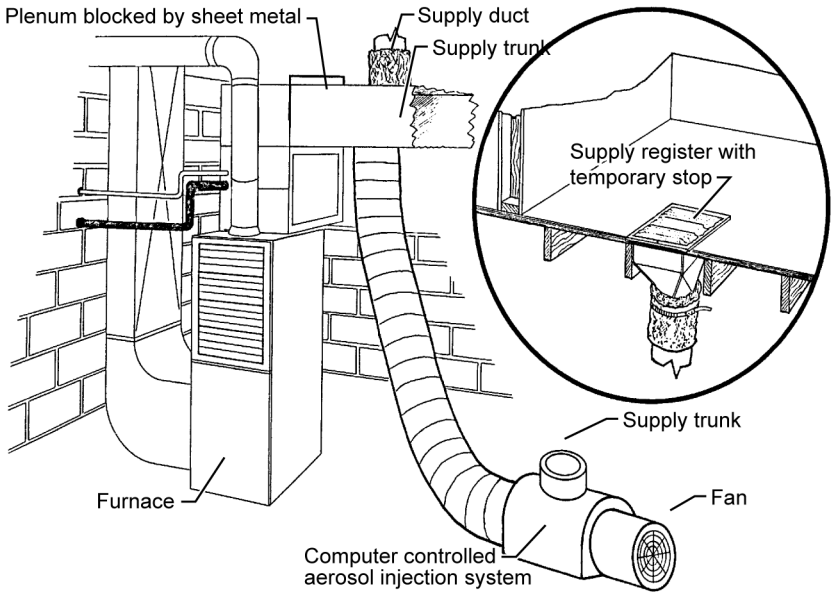

Source: Richard Heath & Associates/Pacific Gas & Electric

Figure 4-15 – Computer-Controlled Aerosol Injection System

4.5 Controls

4.5.1 Setback Thermostats

Automatic setback thermostats can add both comfort and convenience to a home. Occupants can wake up to a warm house in the winter and come home to a cool house in the summer without using unnecessary energy.

§151(f) 9

A setback thermostat is always required for central systems whether the prescriptive or performance compliance method is used. An exception is allowed only if: (1) the building complied using a computer performance approach with a

non-setback thermostat; and (2) the system is one of the following non-central types:

- Non-central electric heaters
- Room air conditioners
- Room air conditioner heat pumps
- Gravity gas wall heaters
- Gravity floor heaters
- Gravity room heaters
- Room air conditioners.

When it is required, the setback thermostat must have a clock or other mechanism that allows the building occupant to schedule the heating and/or cooling setpoint temperature over a 24-hour period. The setback thermostat must be designed so that the building occupant can program different temperature settings for at least two different time periods each day, for example, 68°F during morning hours, 60°F during the day, 68°F during evening hours, and 60°F at night.

If more than one piece of heating equipment is installed in a residence or dwelling unit, the set-back requirement may be met either by controlling all heating units by one setback thermostat or by controlling each unit with a separate setback thermostat. Separate heating units may be provided with a separate on/off control capable of overriding the setback thermostat.

Wood stoves do not need a setback thermostat

112(b)

Note that setback thermostats for heat pumps must be “smart thermostats” that minimize the use of supplementary electric resistance heating during startup and recovery from setback, as discussed earlier in the Heating Equipment section.

Example 4-2

Question

Am I exempt from the requirement for a setback thermostat if I have a gravity wall heater or any of the equipment types listed in the exception to §150(i)?

Answer

Exemption from the requirement depends on the compliance approach you are using. The exception requires that “the resulting increase in energy use due to the elimination of the setback thermostat shall be factored into the compliance analysis.” The only compliance approach that models this condition is the computer performance approach. To be exempt from the setback thermostat requirement, the building/space must be modeled with “non-setback.” Any time the alternative component packages are used for compliance, a setback thermostat is required, regardless of the type of heating/cooling system (except wood stoves).

4.5.2 Zonal Control

An energy compliance credit is provided for zoned heating and air-conditioning systems, which save energy by providing selective conditioning for only those areas of a house that are occupied. A house having at least two zones (living and sleeping) may qualify for this compliance credit. The equipment may consist of one air-conditioning system for the living areas and another system for sleeping areas or a single system with zoning capabilities, set to turn off the sleeping areas in the daytime and the living area unit at night. (See Figure 4-16).

There are unique eligibility and installation requirements for zonal control to qualify under the Standards. The following steps must be taken for the building to show compliance with the Standards under this exceptional method:

- Temperature Sensors. Each thermal zone, including a living zone and a sleeping zone, must have individual air temperature sensors that provide accurate temperature readings of the typical condition in that zone.
- Habitable Rooms. Each habitable room in each zone must have a source of space heating and/or cooling (if zonal credit for cooling is desired) such as forced air supply registers or individual conditioning units. Bathrooms, laundry, halls and/or dressing rooms are not habitable rooms.
- Noncloseable Openings. The total noncloseable opening area between adjacent living and sleeping thermal zones (i.e., halls, stairwells, and other openings) must be less than or equal to 40 ft^2. All remaining zonal boundary areas must be separated by permanent floor-to-ceiling walls and/or fully solid operable doors capable of restricting free air movement when in the closed position.

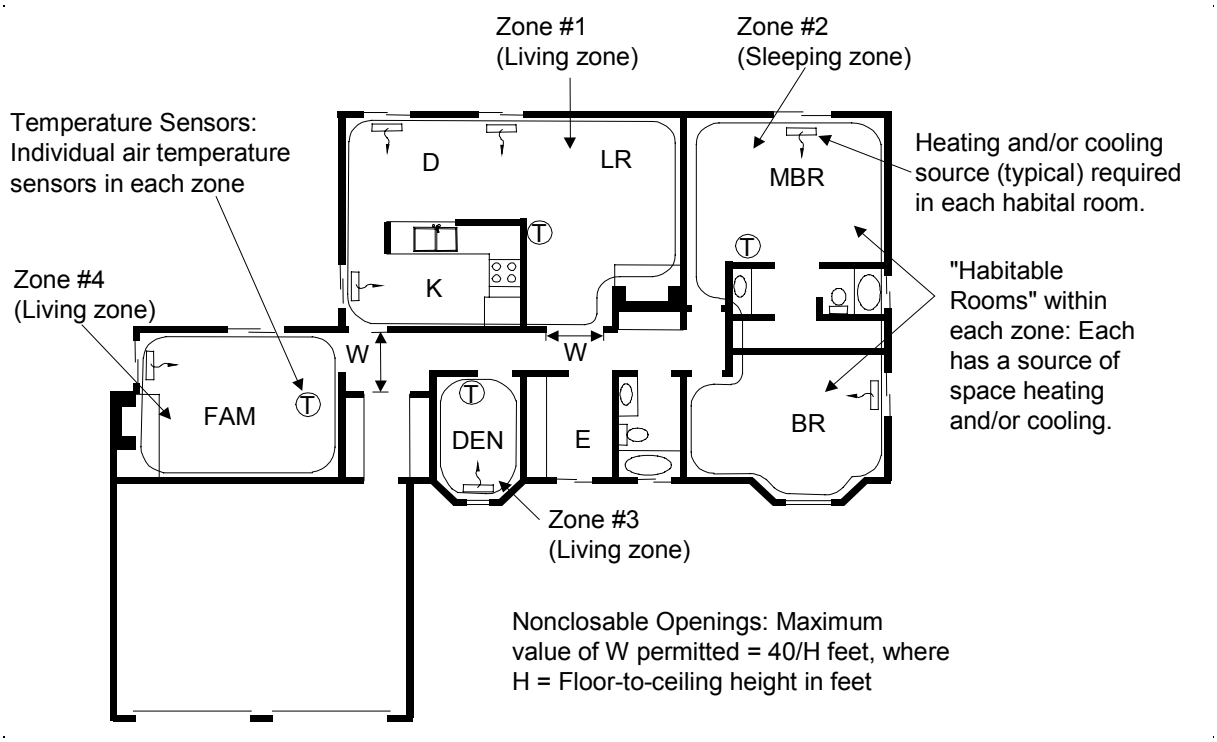

Figure 4-16 – Zonal Control Example

- *Setback Thermostats*. Each zone must be controlled by a central automatic dual setback thermostat that can control the conditioning equipment and maintain preset temperatures for varying time periods in each zone independent of the other.

Other requirements specific to forced air ducted systems include the following:

- Each zone must be served by a return air register located entirely within the zone. Return air dampers are not required.
- Supply air dampers must be manufactured and installed so that when they are closed, there is no measurable airflow at the registers.
- The system must be designed to operate within the equipment manufacturer's specifications.
- Air is to positively flow into, through, and out of a zone only when the zone is being conditioned. No measurable amount of supply air is to be discharged into unconditioned or unoccupied space in order to maintain proper air flows in the system.
- Systems that allow supply air to be by-passed to the return-air system shall be protected against short cycling and excessive temperatures of the space-conditioning equipment, and include necessary controls for efficient, safe and quiet operation.

Although multiple thermally distinct living and/or sleeping zones may exist in a residence, the correct way to model zonal control for credit requires only two

zones: one living zone and one sleeping zone. All separate living zone components must be modeled as one single living zone, and the same must be done for sleeping zones. See also Appendix RD in the *Residential ACM Manual* for modeling details.

Example 4-3

Question

In defining the living and sleeping zones for a home with a zonally controlled HVAC system, can laundry rooms and bathrooms (which are not habitable spaces) be included on whichever zone they are most suited to geographically (e.g., a bathroom located near bedrooms)?

Answer

Yes. For computer modeling, include the square footage of any nonhabitable, or indirectly conditioned spaces, with the closest zone.

Example 4-4

Question

I have two HVAC systems and want to take zonal control credit. Can the return air grilles for both zones be located next to each other in the 5 ft wide by 9 ft high hallway (in the same zone)?

Answer

No. Because of the need to prevent mixing of air between the conditioned zone and the unconditioned zone, it is necessary to (1) have the return air for each zone within that zone, and (2) limit any non-closeable openings between the two zones to 40 ft² or less. Unless these criteria and the other criteria listed in this chapter can be met, credit for a zonally controlled system cannot be taken.

4.6 Alternative Systems

4.6.1 Hydronic Heating Systems

Hydronic heating is the use of hot water to distribute heat. Hydronic heating is discussed in this compliance manual as an “Alternative System” because it is much less common in California than in other parts of the United States.

A hydronic heating system consists of a heat source, which is either a boiler or water heater, and a distribution system. There are three main types of hydronic distribution systems, and they may be used individually or in combination: baseboard or valence convectors, hot water air handlers, and radiant panel heating systems. These three options are illustrated in Figure 4-17.

- Baseboard/valence convectors are finned tubes that run along the base or top of walls. A metal enclosure conceals the finned tubes. Convectors do not require ducting.
- Air handlers consist of a blower and finned tube coil enclosed in a sheet metal box (similar to a typical residential furnace), and

may be ducted or non-ducted. Air handlers may also include refrigerant coils for air conditioning.

- Radiant panels may be mounted on or integrated with floors, walls, and ceilings. Radiant floor panels are most typical. See the separate section below for additional requirements specific to radiant floor designs.

Mandatory Requirements

For hydronic heating systems without ducts, the mandatory measures cover only pipe insulation, tank insulation, and boiler efficiency. Otherwise, for fan coils with ducted air distribution, the mandatory air distribution measures also apply as described earlier in this document. And for combined hydronic systems, as described below, mandatory water heating requirements also apply to the water heating portion of the system.

§150(j) Water System Pipe and Tank Insulation and Cooling Systems Line Insulation

The typical residential hydronic heating system operating at less than 200° F must have at least 1 in. of nominal R-4 insulation on pipes up to 2 in. in diameter and 1.5 in. of insulation on larger pipes. For other temperatures and pipe insulation characteristics see Tables 150-A and 150-B in the Standards.

There are a few exceptions where insulation is not required: sections of pipes where they penetrate framing members; pipes that provide the heat exchange surface for radiant floor heating; piping in the attic that is covered by at least 4 inches of blown insulation; and piping installed within walls if all the requirements for Insulation Installation Quality are met (see the envelope chapter).

If the system includes an unfired hot water storage tank, then the tank must be either wrapped with R-12 insulation or insulated internally to at least R-16.

§123 Requirements for Pipe Insulation

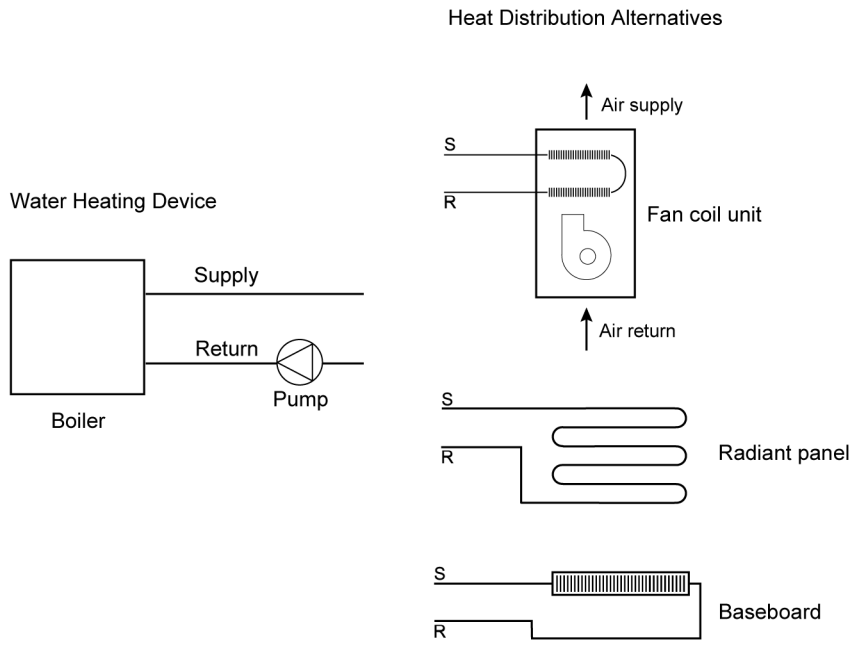

Figure 4-17 – Hydronic Heating System Components

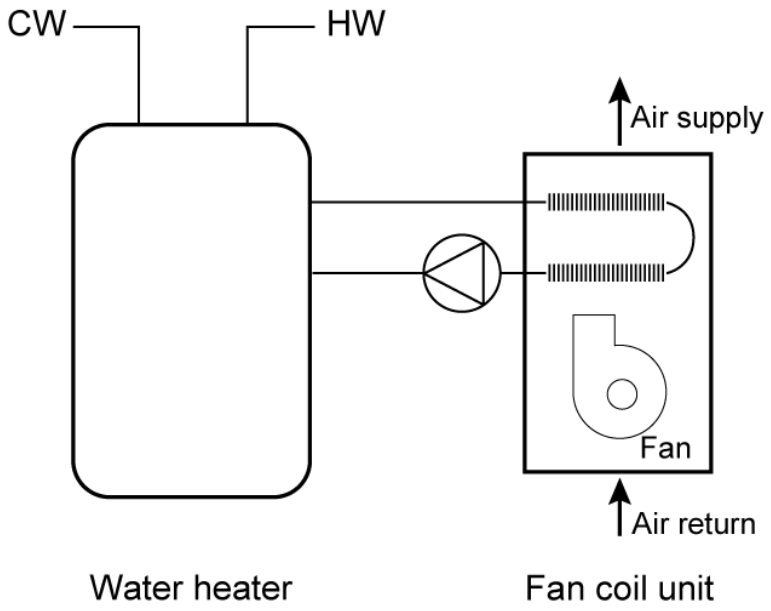

Figure 4-18– Combined
Hydronic System with Water Heater as Heat Source

For pipes in hydronic heating systems that operate at pressure greater than 15 psi, the requirements of §123 apply. These are the same requirements that apply to nonresidential piping systems.

Appliance Efficiency Regulations, Title 20

Gas or oil boilers of the size typically used for residential space heating (less than 300,000 Btu/h capacity) must be rated with an AFUE of 80% or greater. A gas or oil water heater may also be used as a dedicated source for space heating. Other hot water sources, including heat pumps or electric resistance water heaters, are not allowed for use in dedicated space heating systems. Therefore, some water heaters may be used for space heating only if used as part of a combined hydronic system as described below. In that case, the mandatory water heater requirements apply.

Thermostat requirements also apply to hydronic systems as described in an earlier section.

Prescriptive Requirements

There are no specific prescriptive requirements that apply to hydronic systems. However, if the system has a fan coil with ducted air distribution, the relevant prescriptive requirements apply, including duct insulation and duct sealing.

Compliance Options

Credit for choosing a hydronic heating system is possible using the performance compliance method. The standard design is assumed to have a furnace and ducted air distribution system. Therefore, hydronic systems without ducts can take credit for avoiding duct leakage penalties. In addition, minimizing the amount of pipe outside of conditioned space will provide some savings. Hydronic heating compliance calculations are described in the Residential ACM Manual, Section 6.2.

If the proposed hydronic system includes ducted air distribution, then the associated compliance options described earlier in this chapter may apply, such as adequate airflow (if there is air conditioning) and supply duct location.

A “combined hydronic” system is another compliance option that is possible when using the performance method. Combined hydronic heating refers to the use of a single water heating device as the heat source for both space and domestic hot water heating.

There are two types of combined hydronic systems. One uses a boiler as a heat source for the hydronic space heating system. The boiler also heats domestic water by circulating hot water through a heat exchanger in an indirect-fired water heater.

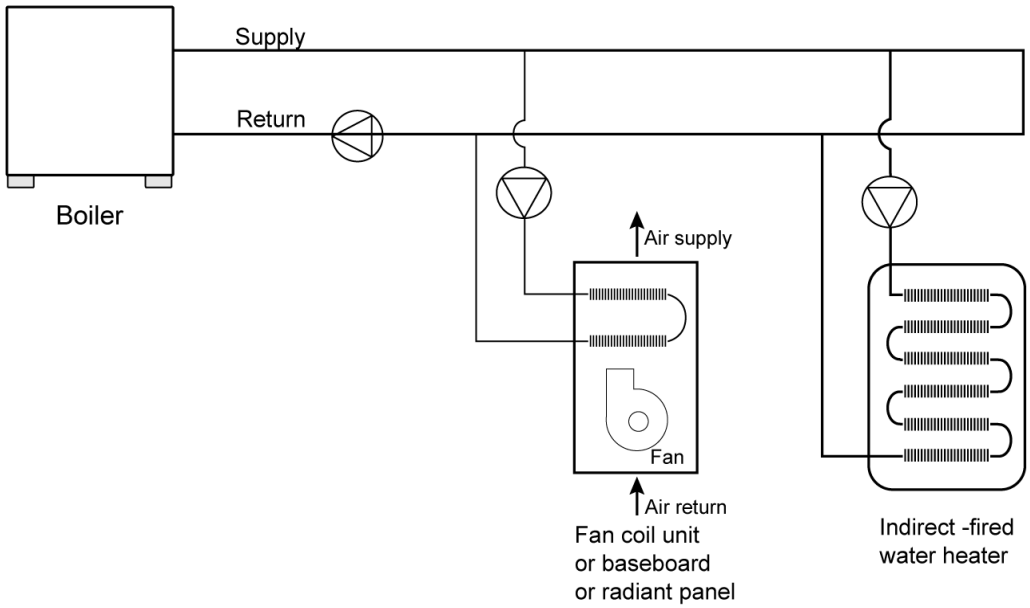

Figure 4-19 – Combined Hydronic System with Boiler and Indirect Fired Water Heater

The other type uses a water heater as a heat source. The water heater provides domestic hot water as usual. Space heating is accomplished by circulating water from the water heater through the space heating delivery system. Sometimes a heat exchanger is used to isolate potable water from the water circulated through the delivery system. Some water heaters have built-in heat exchangers for this purpose.

For compliance calculations, the water heating function of a combined hydronic system is analyzed for its water heating performance as if the space heating function were separate. For the space heating function, an “effective” AFUE or HSPF rating is calculated. These calculations are performed automatically by the compliance software (see the compliance program vendor’s supplement).

4.6.2 Radiant Floor System

One type of distribution system is the radiant floor system, either hydronic or electric, which must meet mandatory insulation measures (see below). Radiant floors may take one of several forms. Tubing or electric elements for radiant floor systems may be

- embedded in a concrete floor slab,
- installed over the top of a wood sub-floor and covered with a concrete topping,
- installed over the top of wood sub-floor in between wood furring strips, or
- installed on the underside surface of wood sub-floor.

In the latter two types of installations aluminum fins are typically installed to spread the heat evenly over the floor surface, and to reduce the temperature of

the water required. All hydronic systems use one or more pumps to circulate hot water. Pumps are controlled directly or indirectly by thermostats, or by special outdoor reset controls.

Mandatory Insulation Measures

§118(g) Insulation Requirements for Heated Slab Floors

Table 118-B Slab Insulation Requirements for Heated Slab-On-Grade Floors

Table 4-8 – Slab Insulation Requirements for Heated Slabs

Location of Insulation	Orientation of Insulation	Installation Criteria	Climate Zone	Insulation R-value
Outside edge of heated slab, either inside or outside the foundation wall	Vertical	From the level of the top of the slab, down 16 in. or to the frost line, whichever is greater. Insulation may stop at the top of the footing where this is less than the required depth. For below-grade slabs, vertical insulation shall be extended from the top of the foundation wall to the bottom of the foundation (or the top of the footing) or frost line whichever is greater.	1-15	5
			16	10
Between heated slab and outside foundation wall	Vertical and Horizontal	Vertical insulation from the top of the slab at the inside edge of the outside wall down to the top of the horizontal insulation. Horizontal insulation from the outside edge of the vertical insulation extending 4 ft toward the center of the slab in a direction normal to the outside of the building in the plan view.	1-15	5
			16	10 vertical and 7 horizontal

Radiant floor systems in concrete slabs must have insulation between the heated portion of the slab and the outdoors.

When space heating hot water pipes or heating elements are set into a concrete slab-on-grade floor, slab-edge insulation from the level of the top of the slab, down 16 in. or to the frost line, whichever is greater (insulation may stop at the top of the footing, where this is less than the required depth), or insulation installed down from the top of the slab and wrapping under the slab for a minimum of 4 ft toward the middle of the slab, is required. The required insulation value for each of these insulating methods is either R-5 or R-10 depending on climate zone as shown in Table 4-8. Any part of the slab extending outward horizontally must be insulated to the level specified in Table 4-8.

When using the performance compliance method with slab-on-grade construction, the standard design includes slab edge insulation as described above using the F-factors in Joint Appendix IV, Table IV.27.

When space heating hot water pipes or heating elements are set into a lightweight concrete topping slab laid over a raised floor, insulation must be applied to the exterior of any slab surface from the top of the slab where it meets the exterior wall, to the distance below ground level described in Table 4-8. If the slab does not meet the ground on its bottom surface, the specified insulation level must be installed on the entire bottom surface of the raised slab. Any part of the slab extending outward horizontally must be insulated to the level specified in Table 4-8. For lightweight slabs installed on raised floors and inside

exterior walls, the overall wall R-value and overall floor R-value (determined as 1/(U-factor)) may be counted toward meeting the minimum R-value requirements specified in Table 4-8.

Raised floor insulation that meets the mandatory minimum R-value for wood floor assemblies also meets the requirement for insulation wrapping under the lightweight topping slab.

Slab edge insulation applied to basement or retaining walls (with heated slab below grade) must be installed so that insulation starts at or above ground level and extends down to the bottom of the foundation or to the frost line, whichever is greater.

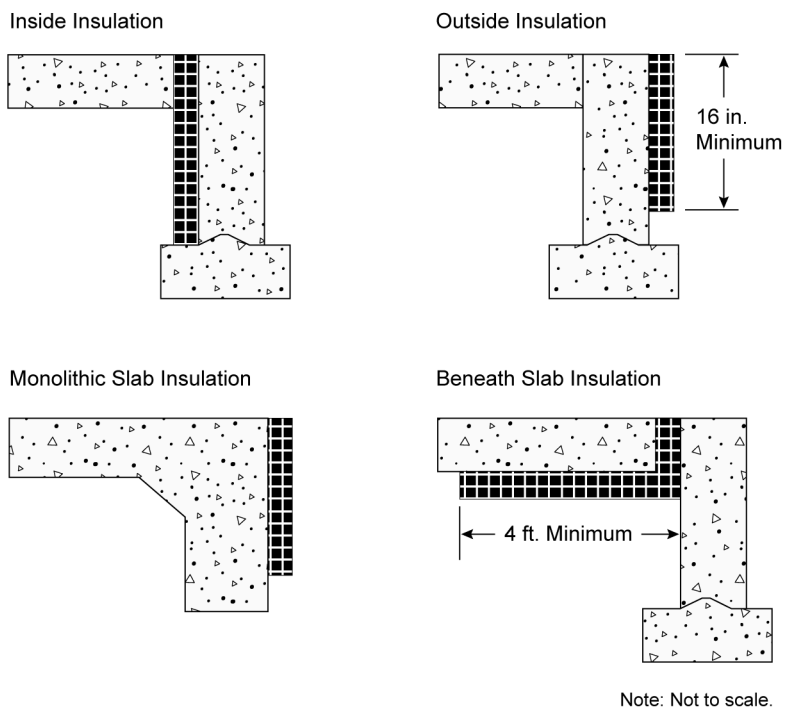

Figure 4-20– Heated Slab-On-Grade Floor Insulation Options

Local conditions (such as a high water table) may require special insulation treatment in order to achieve satisfactory system performance and efficiency. To determine the need for additional insulation, follow the recommendations of the manufacturer of the hydronic tubing or heating element being installed. Where there is a danger of termite infestation, install termite barriers, as required, to prevent hidden access for insects from the ground to the building framing.

In addition to the insulation R-value requirements, the Standards also set mandatory measures related to moisture absorption properties of the insulation and protection of the insulation from physical damage or pest intrusion.

Example 4-5

Question

My client wants a dedicated hydronic-heating system (space heating only), but a few things are unclear: (1) What piping insulation is required? (2) Can I use any compliance approach? (3) Do

I have to insulate the slab with slab edge insulation? and (4) What special documentation must be submitted for this system type?

Answer

(1) The supply lines not installed within a concrete radiant floor must be insulated in accordance with §150(j)—1.0 in. of nominal R-4 on pipes that are 2 in. or less in diameter, and 1.5 in. for pipes greater than 2 in. in diameter.

(2) You can use any compliance approach, but the boiler must meet the mandatory efficiency 80% AFUE.

(3) The slab edge insulation shown in Table 4-8 is required only when the distribution system is a radiant floor system (pipes in the slab). When this is the case the insulation values shown are mandatory measures (no modeling or credit).

(4) No special documentation is required.

Question

What are the slab edge insulation requirements for a hydronic-heating system with the hot water pipes in the slab?

Answer

The requirements for slab edge insulation can be found in §118 and §150(l) of the Standards.

Material and installation specifications are as follows:

• insulation values as shown in Table 4-8,

• protected from physical damage and ultra-violet light deterioration,

• water absorption rate no greater than 0.3% (ASTM-C-272), and

• water vapor permeance no greater than 2.0 per in. (ASTM-E-96-90).

4.6.3 Evaporative Cooling

Credit for evaporative coolers is allowed in all low-rise residential buildings. Evaporative coolers provide cooling to a building by either direct contact with water (direct evaporative cooler, often called a “swamp cooler”), or a combination of a first stage heat exchanger to pre-cool building air temperature and a second stage with direct contact with water (indirect/direct evaporative cooler).

Evaporative coolers may be used with any compliance approach. Using a performance approach, the cooling efficiency is assumed to be SEER of 11.0 for direct systems and 13.0 for indirect/direct systems. The same SEERs can be used for evaporative coolers installed with or without backup air conditioning. When an evaporative cooling system is installed in conjunction with a cooling system that is equipped with a compressor, the efficiency of the most efficient system may be used for compliance.

When selecting evaporative cooling, the following characteristics should be considered:

- Direct evaporative coolers in climates that are both hot and humid may result in uncomfortable indoor humidity levels.

- Indirect/direct evaporative coolers do not increase indoor humidity as much as direct systems and would be unlikely to produce uncomfortable indoor humidity levels, even in hot, humid areas.
- Evaporative coolers may not reduce indoor temperatures to the same degree as air conditioning.

To receive credit at the efficiencies listed above, the evaporative cooling system must meet the following requirements:

Eligibility and Installation Criteria

Evaporative cooler ducts must satisfy all requirements that apply to air conditioner ducts except for diagnostic testing for duct leakage when there is a dedicated duct system for evaporative cooling only.

Thermostats are required. If air conditioning is installed in conjunction with an evaporative cooler, a two-stage thermostat with time lockout is required.

Automatic relief venting must be provided to the building.

Evaporative coolers must be permanently installed. No credits are allowed for removable window units.

Evaporative coolers must provide minimum air movement at the minimum stated air delivery rate certified with the tests conducted in accordance with the Air Movement and Control Association (AMCA) Standard 210 (see Table 4-10 below).

4.6.4 Ground-Source Heat Pumps

Table 4-9 – Standards for Ground Water-Source and Ground-Source Heat Pumps Manufactured on or after October 29, 2003
Source: Table C-8 of the California Appliance Efficiency Regulations, Effective - August 19, 2003

Appliance	Rating Condition	Minimum Standard
Ground water source heat pumps (cooling)	59º F entering water temperature	16.2 EER
Ground water source heat pumps (heating)	50º F entering water temperature	3.6 COP
Ground source heat pumps (cooling)	77º F entering brine temperature	13.4 EER
Ground source heat pumps (heating)	32º F entering brine temperature	3.1 COP

Table 4-10 – Minimum Air Movement Requirements for Evaporative Coolers

Climate Zones	Direct (cfm ft²)	Indirect/Direct (cfm ft²)
1 – 9	1.5	1.2
10 – 13	3.2	1.6
14 – 15	4.0	2.0
16	2.6	1.3

[1] If backup air conditioning is installed, the minimum air movement for all climate zones is 1.0 cfm/sf.

A geothermal or ground-source heat pump uses the earth as a source of energy for heating and as a sink for energy when cooling. Some systems pump water from an aquifer in the ground and return the water to the ground after exchanging heat with the water. A few systems use refrigerant directly in a loop of piping buried in the ground. Those heat pumps that either use a water loop or pump water from an aquifer have efficiency test methods that are accepted by the Energy Commission.

The mandatory efficiencies for ground water source heat pumps are specified in the California Appliance Efficiency Regulations, and repeated in Table 4-9 below. These efficiency values are certified to the Energy Commission by the manufacturer and are expressed in terms of heating Coefficient of Performance (COP) and cooling EER.

For the performance compliance approach, the COP and EER must be converted to HSPF and SEER. When equipment is not tested for SEER, the EER may be used in place of the SEER. When heat pump equipment is not tested for HSPF, calculate the HSPF as follows:

Equation 4-1

$$HSPF = (3.2 \times COP) - 2.4$$

The efficiency of geothermal heat pump systems is dependent on how well the portion of the system in the ground works. Manufacturers' recommendations must be followed carefully to ensure that the system is appropriately matched to the soil types and weather conditions. Local codes may require special installation practices for the ground-installed portions of the system. Verify that the system will meet local code conditions before choosing this type of system to meet the Standards.

4.6.5 Solar Space Heating

Solar space-heating systems are not recognized within either the prescriptive packages or the performance compliance method.

4.6.6 Wood Space Heating

The Energy Commission's exceptional method for wood heaters with any type of backup heating is available in areas where natural gas is not available. If the required eligibility criteria are met, a building with one or more wood heaters may be shown to comply with the Standards using either the prescriptive or performance approaches as described below.

Prescriptive Approach

The building envelope conservation measures of any one of the Alternative Component Packages must be installed. The overall heating system efficiency (wood stove plus back-up system) must comply with the prescriptive requirements.

Performance Approach

A computer method may be used for compliance when a home has wood space heat. There is no credit, however. Both the proposed design and the standard building are modeled with the same system, e.g., with the overall heating system efficiency equivalent to a 78% AFUE central furnace with ducts in the attic insulated to Package D and with diagnostic duct testing.

Wood Heater Qualification Criteria

The Standards establish exceptional method guidelines for the use of wood heaters. If all of the criteria for the wood heat exceptional method are not met, a backup heating system must be included in the compliance calculations as the primary heat source.

The following eligibility criteria apply:

A. The building department having jurisdiction must determine that natural gas is not available.

Note: Liquefied petroleum gas, or propane, is not considered natural gas.

B. The local or regional air quality authority must determine that its authorization of this exceptional method is consistent with state and regional ambient air quality requirements pursuant to Sections 39000 to 42708 of the California Health and Safety Code.

C. The wood heater must be installed in a manner that meets the requirements of all applicable health and safety codes, including, but not limited to, the requirements for maintaining indoor air quality in the *CMC*, in particular those homes where vapor barriers are.

D. The wood heater must meet the EPA definition of a wood heater as defined in Title 40, Part 60, Subpart AAA of the Code of Federal Regulations (40CFR60 Subpart AAA) (see below).

E. The performance of the wood heater must be certified by a nationally recognized agency and approved by the building department having jurisdiction to meet the performance standards of the EPA.

F. The rated output of the wood heater must be at least sixty percent (60%) of the design heating load, using calculation methods and design conditions as specified in §150(h) of the Standards.

G. At the discretion of the local enforcement agency, a backup heating system may be required and be designed to provide all or part of the design heating load, using calculation methods and design conditions as specified in §150(h) of the Standards.

H. The wood heater must be located such that transfer of heat from the wood heater is effectively distributed throughout the entire residential unit, or it must be used in conjunction with a mechanical means of providing heat distribution throughout the dwelling.

- Habitable rooms separated from the wood heater by one free opening of less than 15 ft² or two or more doors must be provided with a positive heat distribution system, such as a

thermostatically controlled fan system. Habitable rooms do not include closets or bathrooms.

- Wood heaters on a lower level are considered to heat rooms on the next level up, provided they are not separated by two or more doors.

I. The wood heater must be installed according to manufacturer and local enforcement agency specifications and must include instructions for homeowners that describe safe operation.

J. The local enforcement agency may require documentation that demonstrates that a particular wood heater meets any and all of these requirements.

40CFR60 Subpart AAA includes minimum criteria for wood heaters established by the US EPA. These criteria define a wood heater as an enclosed, wood-burning appliance capable of and intended for space heating or domestic water heating that meets all of the following criteria:

- an air-to-fuel ratio averaging less than 35 to 1,
- a firebox volume less than 20 cubic ft.,
- a minimum burn rate less than 5 kilogram/hour (11.0 lbs/hr), and
- a maximum weight of less than 800 kilograms (1760 lbs).

The federal rules explicitly exclude furnaces, boilers, cook stoves, and open masonry fireplaces constructed on site, but include wood-heater inserts.

Wood Water Heating

Credit is also available for the use of wood heat with water heating systems. See the water heating chapter of this manual.

Example 4-6

Question

Are pellet stoves treated the same as wood stoves for the purposes of standards compliance?

Answer

Yes.

Example 4-7

Question

If a wood stove is installed in a wall, does it have to meet the fireplace requirements of standards §150(e)?

Answer

No. A wood stove that meets EPA certification requirements does not have to meet any requirements applicable to fireplaces.

4.6.7 Gas Appliances

§115 Pilot Lights

As noted in an earlier section, pilot lights are prohibited in fan-type central furnaces. The Standards also prohibit pilot lights in cooking appliances, pool heaters, and spa heaters. However, one exception is provided for household cooking appliances without an electrical supply voltage connection and in which each pilot consumes less than 150 Btu/h.

For requirements related to installation of fireplaces, decorative gas appliances, and gas logs, see the envelope chapter.

4.7 Compliance and Enforcement

The purpose of this section is to highlight compliance documentation and field verification requirements related to heating and cooling systems.

4.7.1 Design

The initial compliance documentation consists of the Certificate of Compliance (CF-1R) and the mandatory measures checklist (MF-1R). These documents are included on the plans and specifications. The CF-1R has a section where special modeling features are listed. The following are heating and cooling system features that should be listed in this section if they exist in the proposed design:

Special Features Not Requiring HERS Rater Verification:

- Ducts in a basement
- Ducts in a crawlspace
- Ducts in an attic with a radiant barrier
- Hydronic heating and system design details
- Gas-fired absorption cooling
- Zonal control.

Special Features Requiring HERS Rater Verification

- Refrigerant charge
- Thermostatic expansion valve
- Duct sealing
- Duct design
- Reduced duct surface area and ducts in conditioned space
- Air handler fan watt draw
- Maximum cooling capacity
- Adequate air flow

- High efficiency EER
- Ducts <12 ft outside conditioned space.
- Information summarizing measures requiring field verification and diagnostic testing is presented in Table R-71 in RACM Manual Appendix, Page 7-3 . The protocols that must be used to qualify for compliance credit are in the Residential ACM Manual Appendices.

4.7.2 Construction

During the construction process, the contractor and/or specialty contractors complete the necessary sections of the Installation Certificate (CF-6R). There are four sections that should be completed:

- HVAC Systems
- Duct Leakage and Design Diagnostics
- Refrigerant Charge Measurement
- Duct Location and Area Reduction Diagnostics.

4.7.3 Field Verification and/or Diagnostic Testing

The HERS rater may visit the site to complete heating and cooling system portions of the Certificate of Field Verification and Diagnostic Testing (CF-4R). There are several sections of this form that relate to heating and cooling. The following require field verification and diagnostic testing if they are used in the proposed design for compliance:

- Ducts in conditioned space
- Duct Design
- Diagnostic supply duct location, surface area, and R-value (including buried ducts)
- High efficiency air conditioner EER
- Refrigerant charge or TXV
- Forced air system fan flow/adequate airflow
- Air handler fan watt draw
- Verified maximum cooling capacity
- Verified duct leakage.

Field verification is necessary when credit is taken for the measure. For example, maximum cooling capacity need only be HERS verified if maximum cooling capacity was used to achieve credit in the proposed design

4.8 Glossary/Reference

Refer to Joint Appendix I for terms used in this chapter.

4.8.1 Refrigerant Charge Testing

This section provides an overview of the procedures for verifying refrigerant charge. The prescriptive requirements require this testing if the air conditioner does not have a TXV. Appendix RD of the *Residential ACM Manual* describes the procedures in detail, and refrigeration technicians who do the testing should refer to these and other technical documents. This section is just a summary intended for those who need to know about the procedures but will not be doing the testing.

Overview

A residential split system air conditioner undergoes its final assembly at the time of installation. This installation must be verified to ensure proper performance. One important factor is the amount of refrigerant in the system (the charge). Air conditioner energy efficiency suffers if the refrigerant charge is either too low or too high. In addition to a loss of efficiency, both too much and too little refrigerant charge can lead to premature compressor failure.

To help avoid these problems, the prescriptive standards require that systems be correctly installed. This section describes the measurements and tests required to verify proper refrigerant charge. The testing requirement applies only to ducted split system central air conditioners and ducted split system central heat pumps. An alternative to refrigerant charge testing is installing a TXV, which reduces the effect of low refrigerant. The testing requirement does not apply to packaged systems, for which final assembly is completed in the factory.

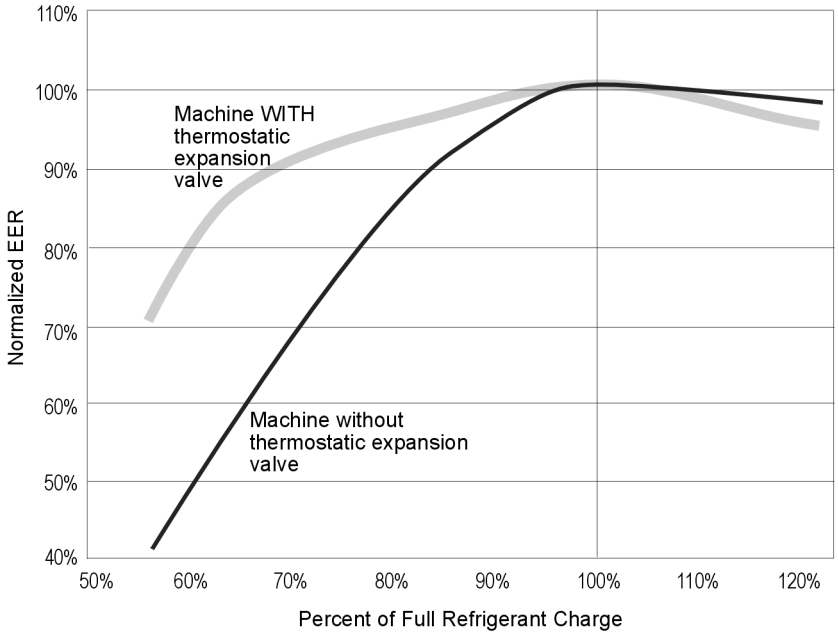

Figure 4-21 – Benefit of Thermostatic Expansion Valve

Testing refrigerant charge by the standard method requires that airflow be adequate for a valid test. This can be verified simultaneously with the Temperature Split Method, or with any of the three methods in Appendix RE of the Residential ACM Manual before the refrigerant charge test. These three methods are RE3.1.1, Plenum Pressure Matching Measurement, RE3.1.2, Flow Capture Hood Measurement, and RE3.1.3, Flow Grid Measurement. When one of these three methods is used, the system may qualify for a verified adequate airflow compliance credit and a verified fan energy compliance credit.

The testing must occur after the HVAC contractor has installed and charged the system in accordance with the manufacturer's specifications. For homes with multiple systems, each system must be tested separately.

Figure 4-21 shows how a thermostatic expansion valve can help mitigate the efficiency penalty of a system with too little refrigerant (undercharged).

Two procedures are described here for testing refrigerant charge. The first procedure, the Standard Charge Measurement, applies when the outdoor temperature is above 55ºF and is the only procedure used by a HERS rater. All HERS rater charge verification is done above 55ºF. The second procedure, Alternate Charge Measurement, must be used by the installation technician when the outdoor temperature is below 55ºF.

Standard Charge Measurement Procedure

The first step is to turn on the air conditioning system and let it run for at least 15 minutes in order to stabilize temperatures and pressures. While the system is warming up and stabilizing, the HERS rater or the installer may fit the instruments needed to take the measurements.

In order to have a valid charge test, the air flow must be verified. One option is to simultaneously perform the temperature split test. As an alternative, one of the three measurements in ACM Manual Appendix RE can be performed with a measured airflow in excess of 400 cfm/ton (dry coil). If one of the optional tests is used, there is the potential for additional compliance credits.

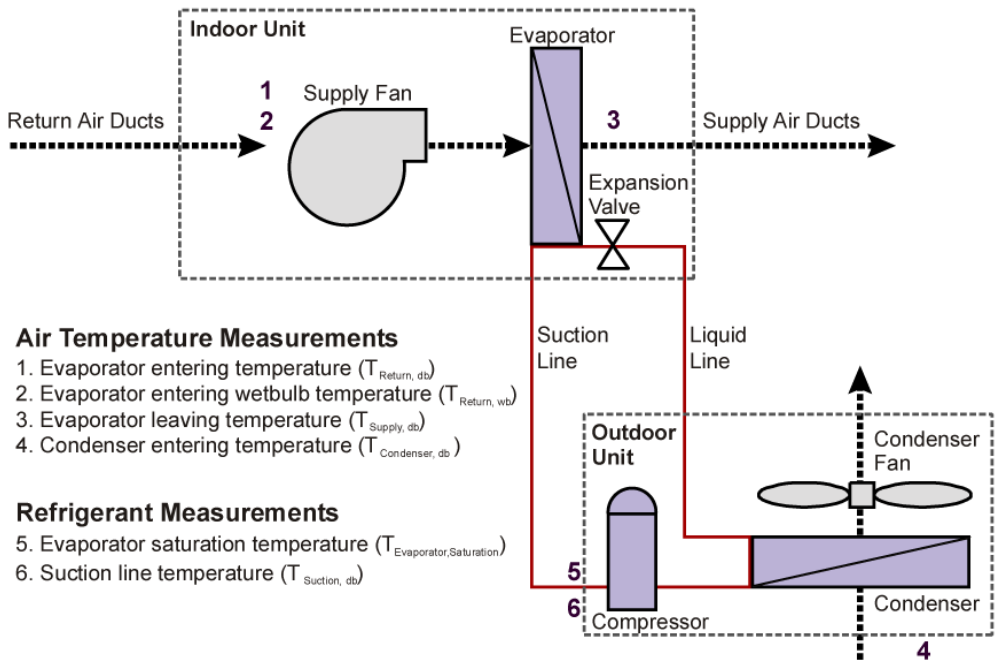

Figure 4-22 – Measurement Locations for Refrigerant Charge and Airflow Tests

Mixed air temperatures are measured in the return plenum before the blower. At this location (see points 1 and 2 in *Figure 4-22*), both the drybulb and wetbulb temperatures are measured. The supply air drybulb temperature is measured in the supply plenum down stream of the cooling coil (see point 3 in *Figure 4-22*). Finally the air temperature is measured where the air enters the outdoor condensing coil (see point 4 in *Figure 4-22*). It is important that the outdoor temperature sensor be shaded from direct sun. In addition to the air temperature measurements, two refrigerant properties need to be measured. Both of these measurements are taken near the suction line service valve before the lines enter the outdoor unit (see points 5 and 6 in *Figure 4-22*). The first measurement is the temperature of the refrigerant, which is taken by attaching a thermocouple to the outside of the suction line and insulating it against the outdoor temperature (a clamp-on thermocouple designed for this purpose may also be used). The second measurement determines the saturation temperature of the refrigerant in the evaporator coil. The saturation temperature is read directly from the low side refrigerant gauge for the refrigerant used in the machine. Alternatively the saturation temperature may be determined from the low side pressure and a saturation temperature table for the refrigerant. There is a one-to-one relationship between saturation temperature and saturation pressure.

The *Charging Method* and *Temperature Split Method* or an approved alternative are used to determine if the refrigerant charge test is valid and if the refrigerant charge is acceptable. The procedure is used when the outdoor temperature is 55°F or higher and after the HVAC installer has installed and charged the system in accordance with the manufacturer's specifications. The procedure requires properly calibrated digital thermometers, thermocouples, and a refrigerant gauge.

Superheat Charging Method

The rater and/or the installer must allow the system to run continuously for 15 minutes before performing the *Superheat Charging Method* measurements. Unless an alternative airflow verification is used the *Temperature Split Method* is performed simultaneously with the *Superheat Charging Method.*

Table 4-11 – Structure of Target Superheat Temperature

		Return Air Wet-Bulb Temperature (°F) ($T_{Return, wb}$)									
		50	51	52	53	54	55	..	..	75	76
Condenser Air Dry-Bulb Temperature (°F) ($T_{condenser, db}$)	55	Target Superheat Temperatures = (Suction Line Temperature minus Evaporator Saturation Temperature) – See Residential ACM Manual Appendix RD									
	56										
	57										
	..										
	..										
	93										
	94										
	95										

Table 4-12 – Structure of Target Temperature Split (Return Dry-Bulb minus Supply Dry-Bulb)
Complete table is in Residential ACM Manual Appendix RD

		Return Air Wet-Bulb Temperature (°F) ($T_{Return, wb}$)									
		50	51	52	53	54	55	..	..	75	76
Return Air Dry–Bulb (°F) (T return, db)	70	Target Temperature Splits = (Return Dry Bulb Temperature minus Supply Dry Bulb Temperature) – See Residential ACM Manual Appendix RD									
	71										
	72										
	..										
	..										
	82										
	83										
	84										

The *Superheat Charging Method* involves comparing the measured superheat to a target value from a table. The measured superheat is the suction line temperature ($T_{Suction, db}$) minus the saturation temperature of the refrigerant ($T_{Evaporator, Saturation}$). The target superheat is read from a table (see Appendix RD in the *Residential ACM Manual*). For illustration purposes, the structure of the table is shown below as Table 4-11. If the actual superheat and the target superheat are within 5ºF of each other, the system passes the required refrigerant charge criterion. If the actual superheat exceeds the target superheat by more than 5°F, then the system is undercharged. If the actual superheat minus the target superheat is between -5° and -100°F, then the system is overcharged. Only an EPA-certified technician may add or remove refrigerant.

The Temperature Split Method

The rater and/or the installer must allow the system to run continuously for 15 minutes before performing the *Temperature Split Method* measurements. The *Temperature Split Method* is performed simultaneously with the *Superheat Charging Method.*

With the *Temperature Split Method,* the air temperature drop across the cooling coil is compared to a target value read from a table. This temperature drop is called the temperature split, thus the name. The actual temperature split is the difference between the drybulb temperature in the return (entering the evaporator) and the drybulb temperature in the supply (leaving the evaporator).

Equation 4-2

Actual Temperature Split = $T_{Return, db} - T_{Supply, db}$

The Target Temperature Split depends on return air wet-bulb temperature ($T_{Return, wb}$) and return air dry-bulb temperature ($T_{Return, db}$). Table 4-12 shows the organization of the table. Residential ACM Manual Appendix RD has the full table. If the actual and target are within plus 3°F and minus 3°F, then the system has sufficient airflow for a valid refrigerant charge test.

If the actual temperature split exceeds the target temperature split by more than 3°F, then airflow is inadequate and must be increased. Increasing airflow can be accomplished by eliminating restrictions in the duct system, increasing blower speed, cleaning filters, or opening registers. After the installer corrects the problem and verifies adequate airflow through the installer's own testing, the HERS rater repeats the measurements to verify a correct refrigerant charge and airflow.

If the actual temperature split is more than 3°F below the target temperature split, the measurement procedure must be repeated making sure that temperatures are measured where the airflow is mixed. If the re-measured numbers still show that the actual temperature split is more than 3°F below the target temperature split, then the system passes, but it is likely that the air conditioner is not producing the capacity it was designed to produce. There may be problems with this air conditioner. (It is possible, but unlikely, that airflow is higher than average.)

Alternate Charge Measurement Procedure

This section describes the Alternate Charge Measurement Procedure. With this method, the required refrigerant charge is calculated using the *Weigh-In Charging Method,* and adequate airflow across the evaporator coil is verified using the *Measured Airflow Method*. This method is used only when the outdoor temperature is below 55°F. EPA-certified technicians must perform the procedure, as follows:

- calculate the refrigerant charge adjustment needed for refrigerant lines, which are longer, shorter, or of different diameter from the standard lineset for this air conditioner, and
- by weight, add or remove the proper amount of refrigerant to compensate for the actual lineset