Oxy CO_2 EOR Project

Project Overview

Presentation Overview

- **CO_2 EOR at Elk Hills**
- Oxy CO_2 EOR Experience
- CO_2 Sequestration Through CO_2 EOR
- Oxy Elk Hills CO_2 EOR Project Description

History of Elk Hills Field

- One of the largest oil fields in the U.S., over 75 square miles
- In operation for more than 100 years
- One of the most fully characterized oil fields in the U.S.
- Current and historic EOR operations include injection of brine water, nitrogen gas, methane, and polymers

Injection Activity at Elk Hills

Number of Well Types: 8,643 **Well Types Having Production:** 7,235 **Well Types Having Injection:** 841

Oper: Occidental of Elk Hills, Inc. 00495

Source: DOGGR Webpage – reported production / injection data (main page: http://www.conservation.ca.gov/Index/Pages/Index.aspx
http://opi.consrv.ca.gov/opi/opi.dll/SumFrame?UsrP_ID=100184314&CACP_ID=776&SortFields=WMtr_APINumber&NewSortFields=&FormStack=Main%2COperator%2CSum&PriorState=Opr__Id%3D100000341&SelectedTab=5&SumMode=1

Production at Elk Hills

Number of Well Types: 8,643 **Well Types Having Production:** 7,235 **Well Types Having Injection:** 841

Oper: Occidental of Elk Hills, Inc. O0495

Source: DOGGR Webpage – reported production / injection data (main page: http://www.conservation.ca.gov/Index/Pages/Index.aspx
http://opi.consrv.ca.gov/opi/opi.dll/SumFrame?UsrP_ID=100184314&CACP_ID=776&SortFields=WMtr_APINumber&NewSortFields=&FormStack=Main%2COperator%2CSum&PriorState=Opr__Id%3D100000341&SelectedTab=2&SumMode=1

Why Undertake EOR at Elk Hills

- Large field, well documented, fully controlled, built out infrastructure
- Lots of oil still in place
- Utilized water for EOR already
- Lab and field tests to assess miscibility and response to CO_2 EOR and found positive results
- Lack of viable CO_2 has been a barrier to going to next step of utilizing CO_2 for EOR

Presentation Overview

- CO_2 EOR at Elk Hills
- **Oxy CO_2 EOR Experience**
- CO_2 Sequestration Through CO_2 EOR
- Oxy Elk Hills CO_2 EOR Project Description

CO_2 EOR on the Rise in US

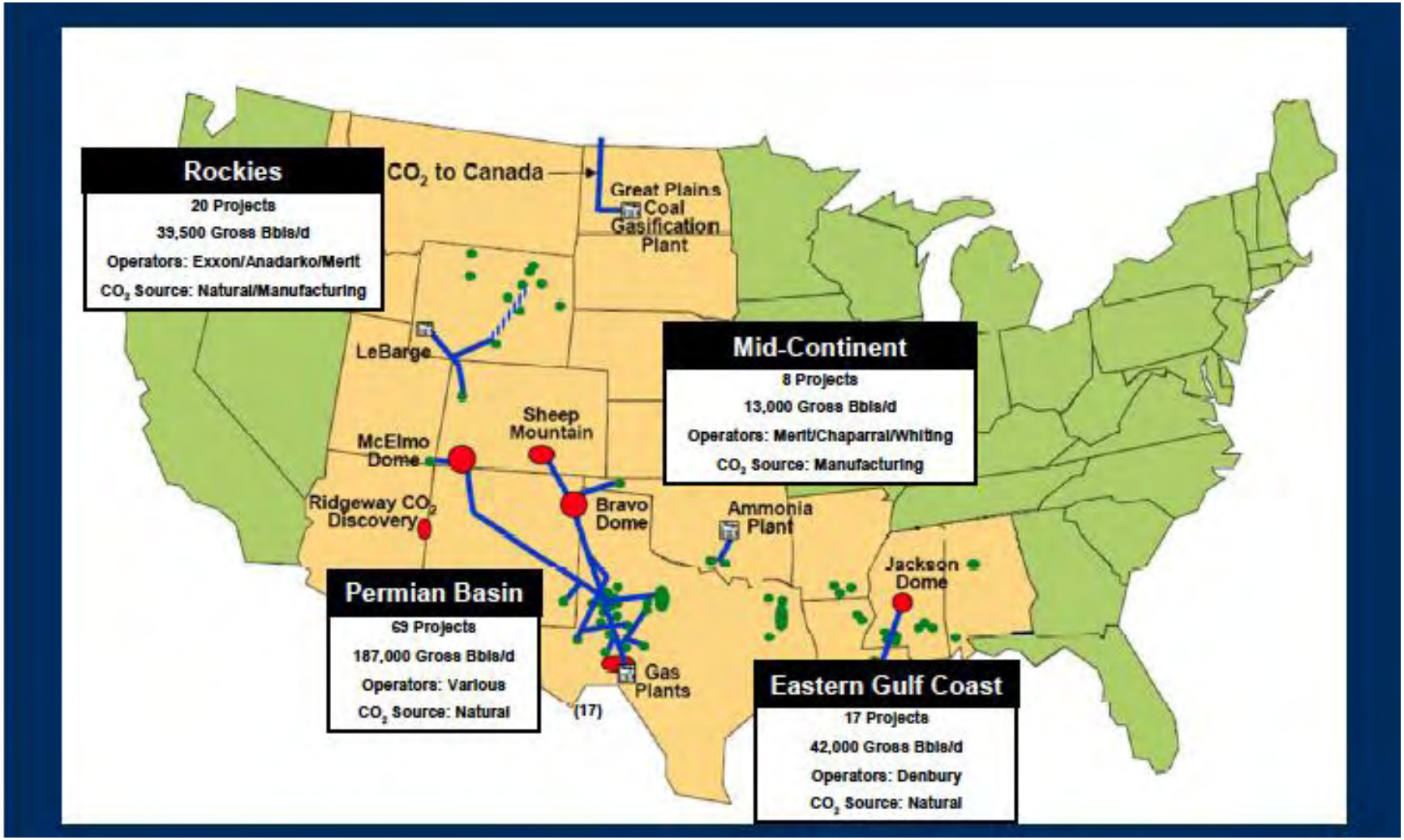

Oxy is a Leader in CO_2 EOR Operations

Oxy Operated projects

- – North Cross (1972)
- – GMK South (1982)
- – Denver Unit (1983)
- – Central Mallet (1984)
- – Frazer Unit (1984)
- – Slaughter Estate (1984)
- – Wasson ODC (1984)
- – South Wasson Clfk (1985)
- – Willard Unit (1986)
- – South Cross (1988)
- – Salt Creek Unit (1993)
- – South Welch Unit (1993)
- – Cedar Lake Unit (1994)
- – Elmar Delaware Unit (1994)
- – Bennett Ranch Unit (1995)
- – North Cowden Unit (1995)
- – Anton Irish Clfk Unit (1997)
- – Mid Cross (1997)
- – North Dollarhide Dvn (1997)
- – West Welch Pilot (1997)
- – Sharon Ridge Unit (1999)
- – TSTAR Abo (1999)
- – Cogdell Unit (2001)
- – HT Boyd (2001)
- – North Hobbs Unit (2003)
- – Levelland Unit (2004)
- – Igoe Smith Unit (2005)
- – West RKM (2006)
- – North West Mallet (2007)

Presentation Overview

- CO_2 EOR at Elk Hills
- Oxy CO_2 EOR Experience
- **CO_2 Sequestration Through CO_2 EOR**
- Oxy Elk Hills CO_2 EOR Project Description

WAG Process – Water Alternating Gas

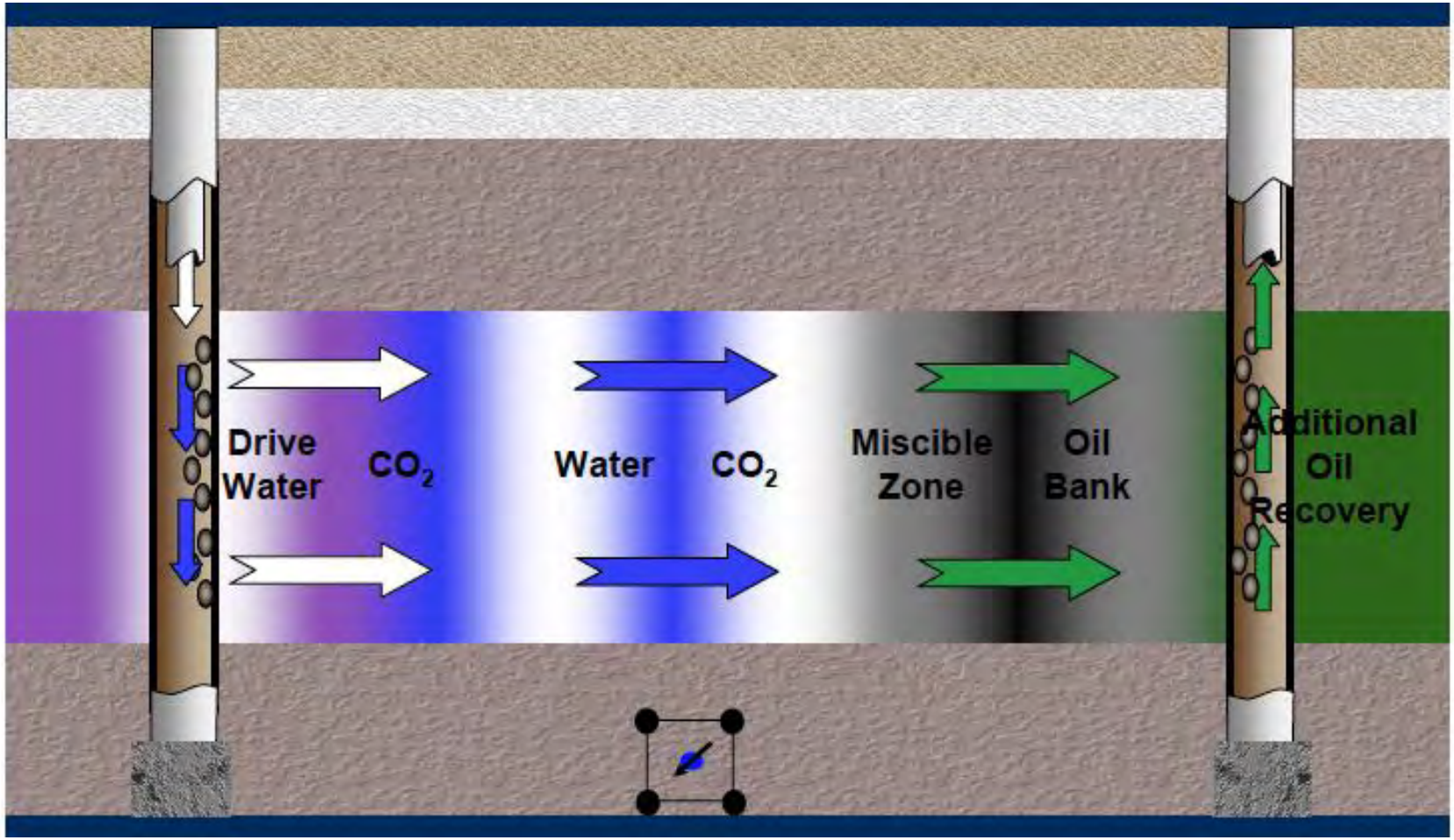

CO_2 EOR = CO_2 Sequestration

- Several mechanisms trap CO_2 in the reservoir

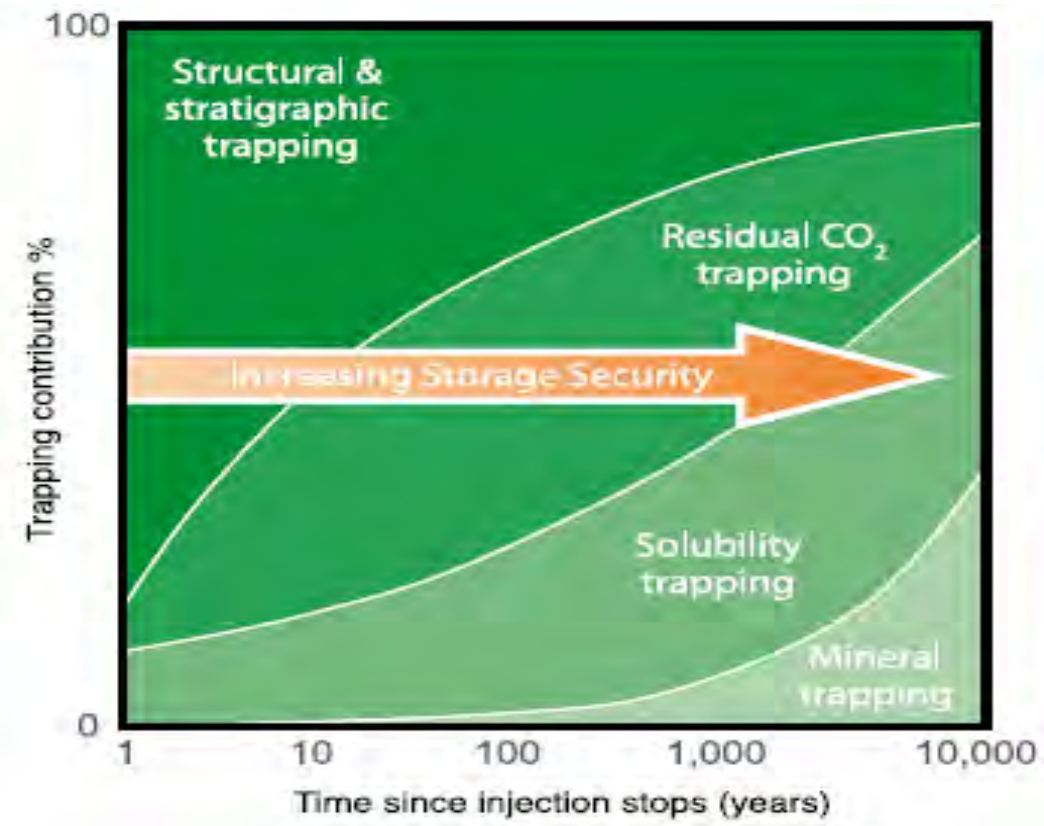

Source: Metz, B., 2005 Special Report on Carbon Dioxide Capture and Storage, Intergovernmental Panel on Climate Change, Cambridge, England. http://www.ipcc.ch/publications_and_data/publications_and_data_reports_carbon_dioxide.htm.

CO_2 Trapping During EOR

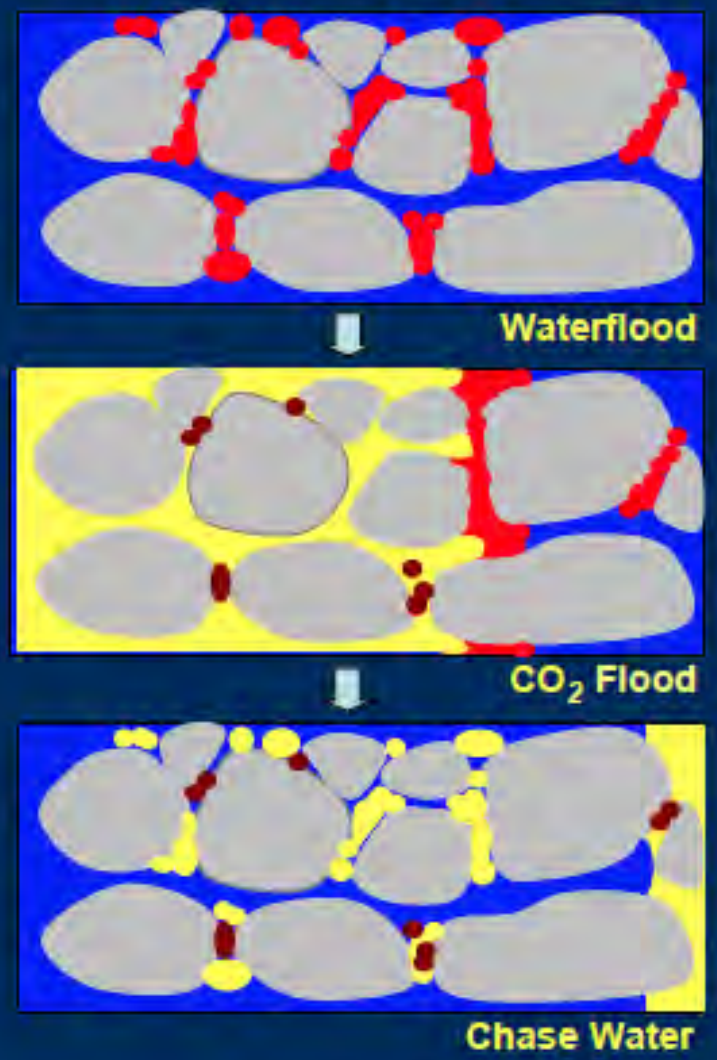

CO_2 EOR Physics

Water injection (blue) recovers oil in large pores; leaving trapped oil (red) in small pores

CO_2 (yellow) dissolves and displaces trapped oil; leaving only heavy ends (brown) in the reservoir.

Frequently, chase water is injected after CO_2. In this case, a significant fraction of CO_2 is trapped / retained by the injected water.

Example Material Balance at Year 25

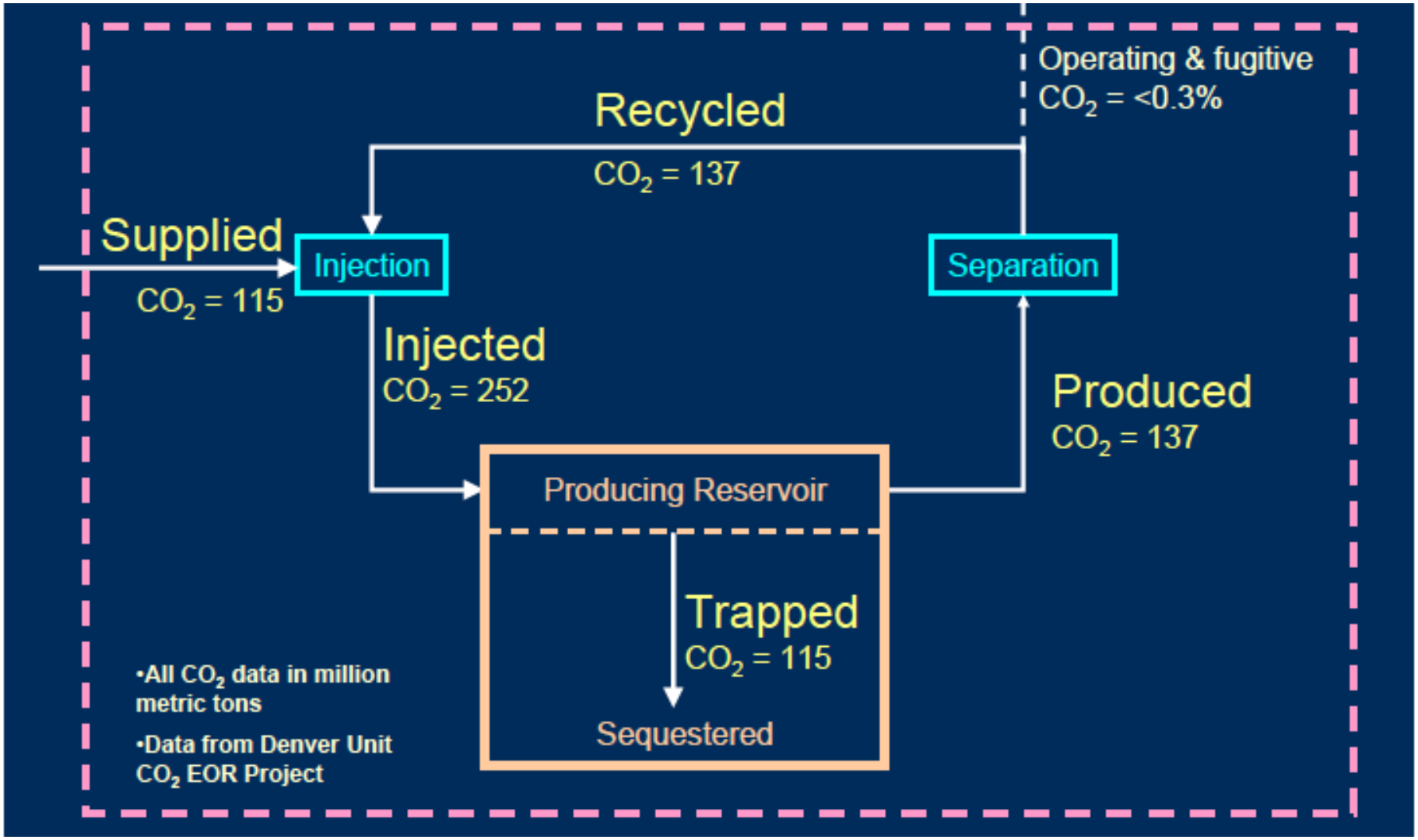

Data are illustrative of a large field in operation for 25 years. Each field is unique and ratios will vary by field and over time. Information predates EPA GHG reporting rule.

Presentation Overview

- CO_2 EOR at Elk Hills
- Oxy CO_2 EOR Experience
- CO_2 Sequestration Through CO_2 EOR
- **Oxy Elk Hills CO_2 EOR Project Description**

San Joaquin Valley

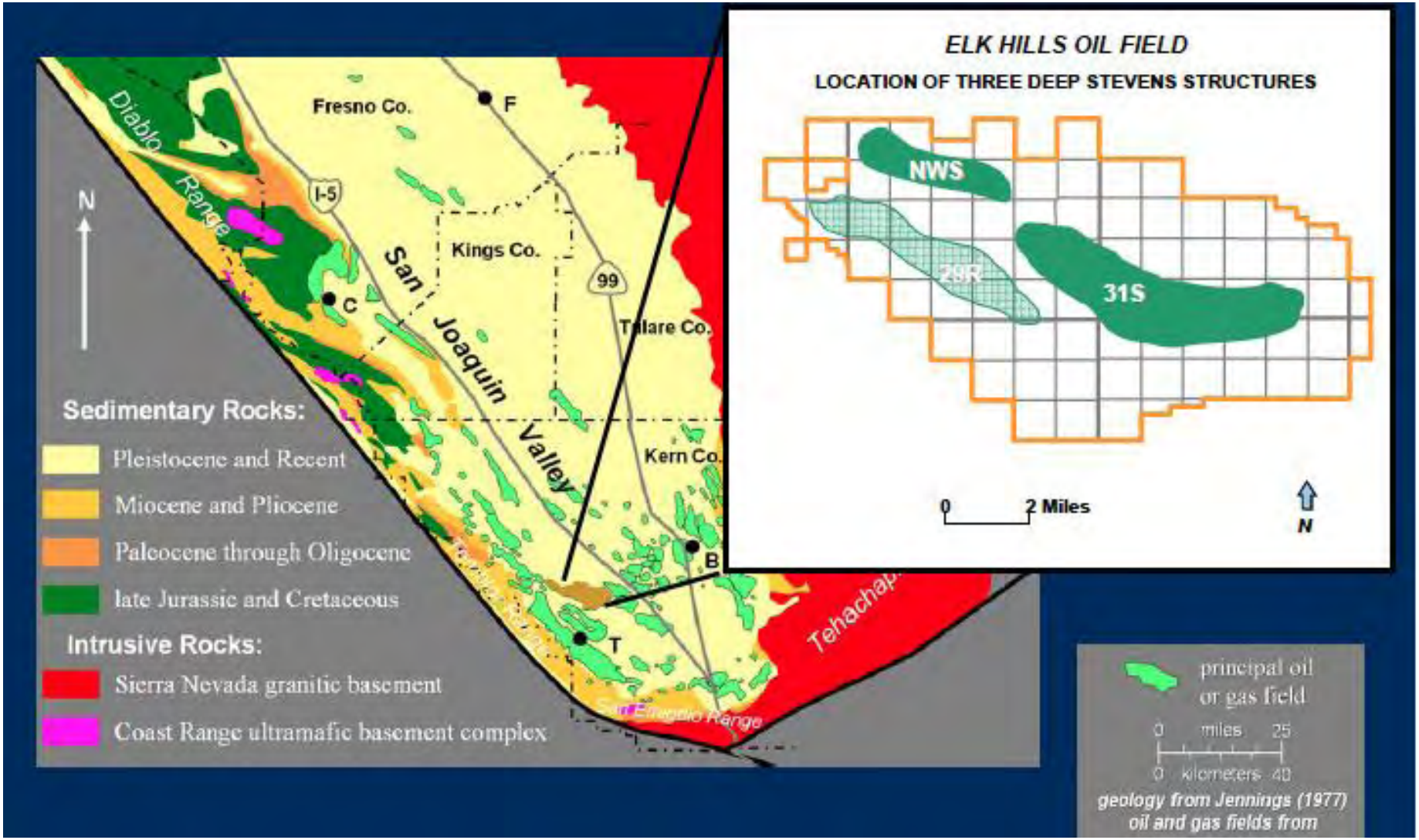

Elk Hills Project - Location

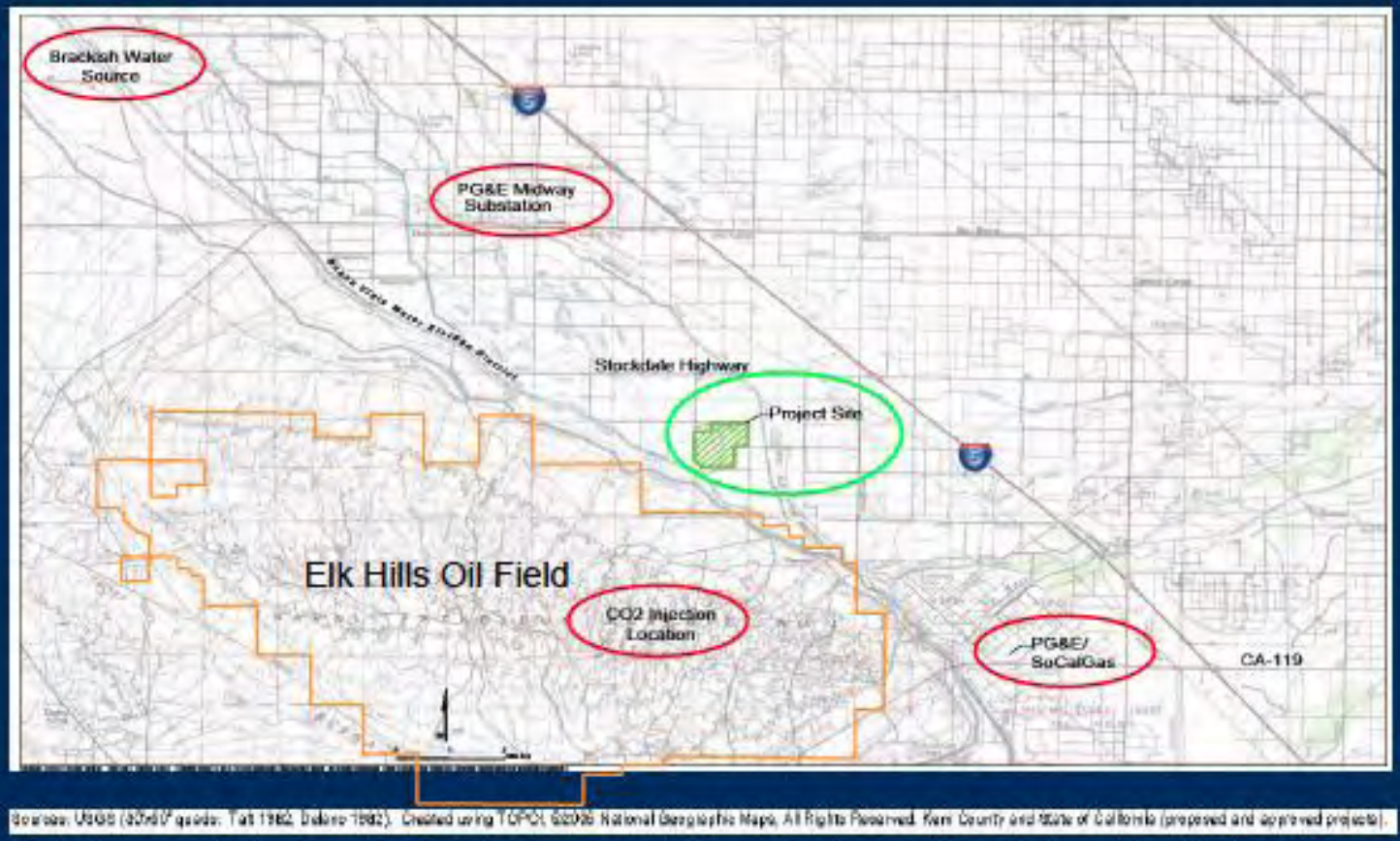

HECA site close to:

- CO_2 injection point and geologic storage formation
- Adequate non-potable water supply
- Electric transmission system

The OEHI CO_2 EOR Target Reservoirs

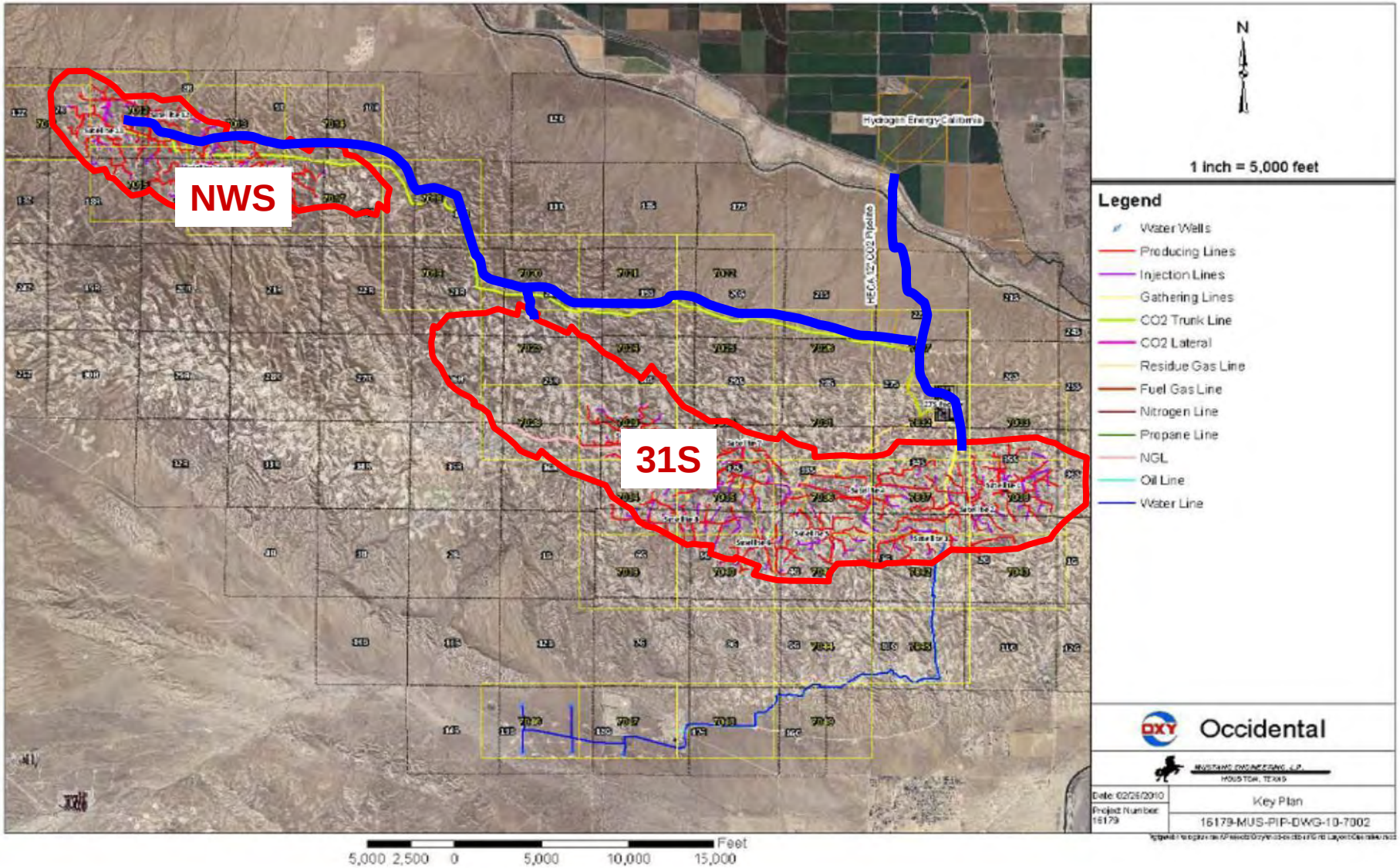

CO_2 EOR – Surface and Well Prep

- New facilities
  - Oil, water, gas collection facilities compatible with CO_2
  - Compression facilities
- Existing wellbores
  - Swap out equipment to be compatible with CO_2 and required pressures
- Drill wells to align areal patterns
- Corrective action on wells as appropriate
- All well work subject to DOGGR well permitting

The CO_2 EOR Process at Elk Hills

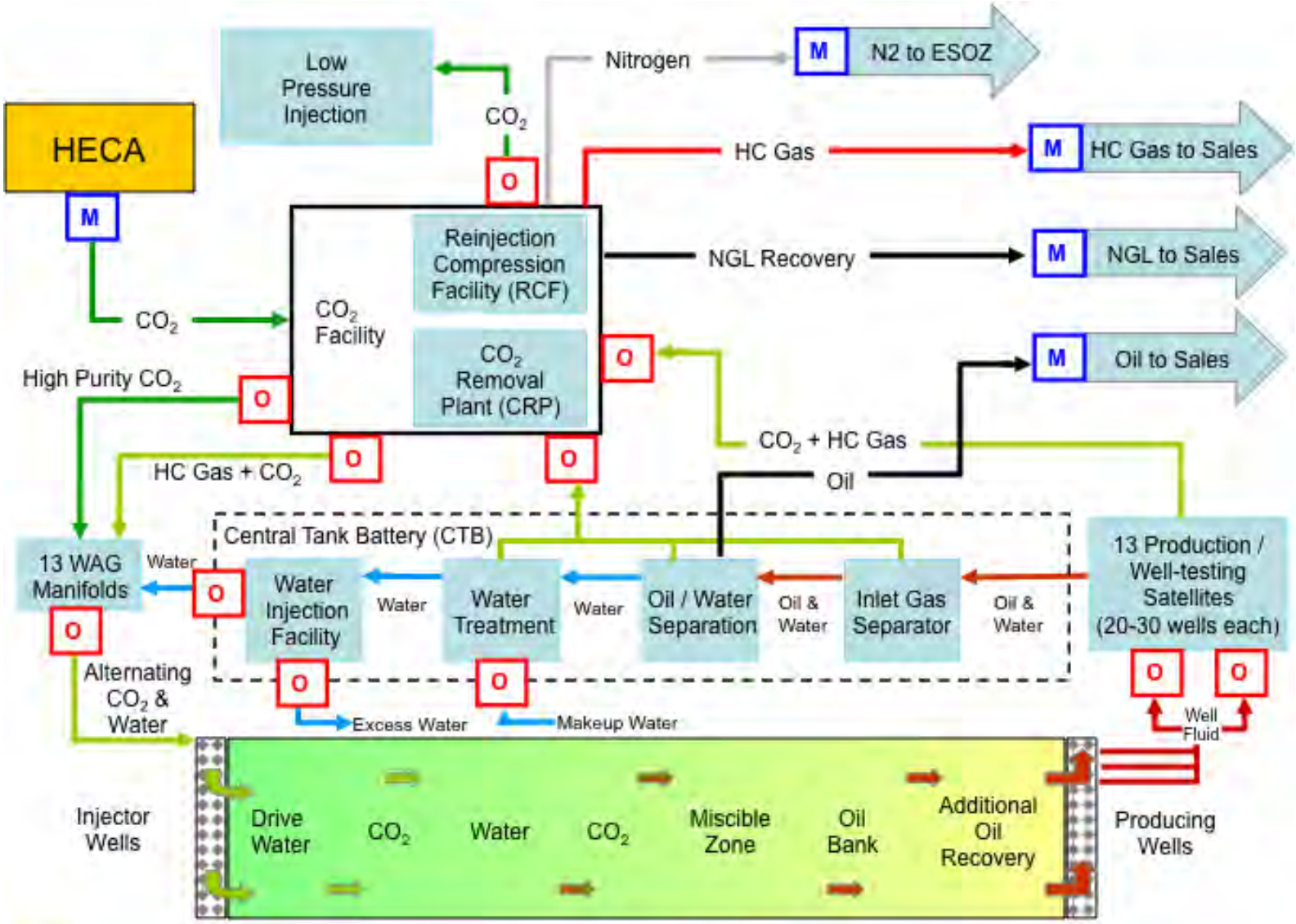

Accept delivery of HECA CO_2 via pipeline

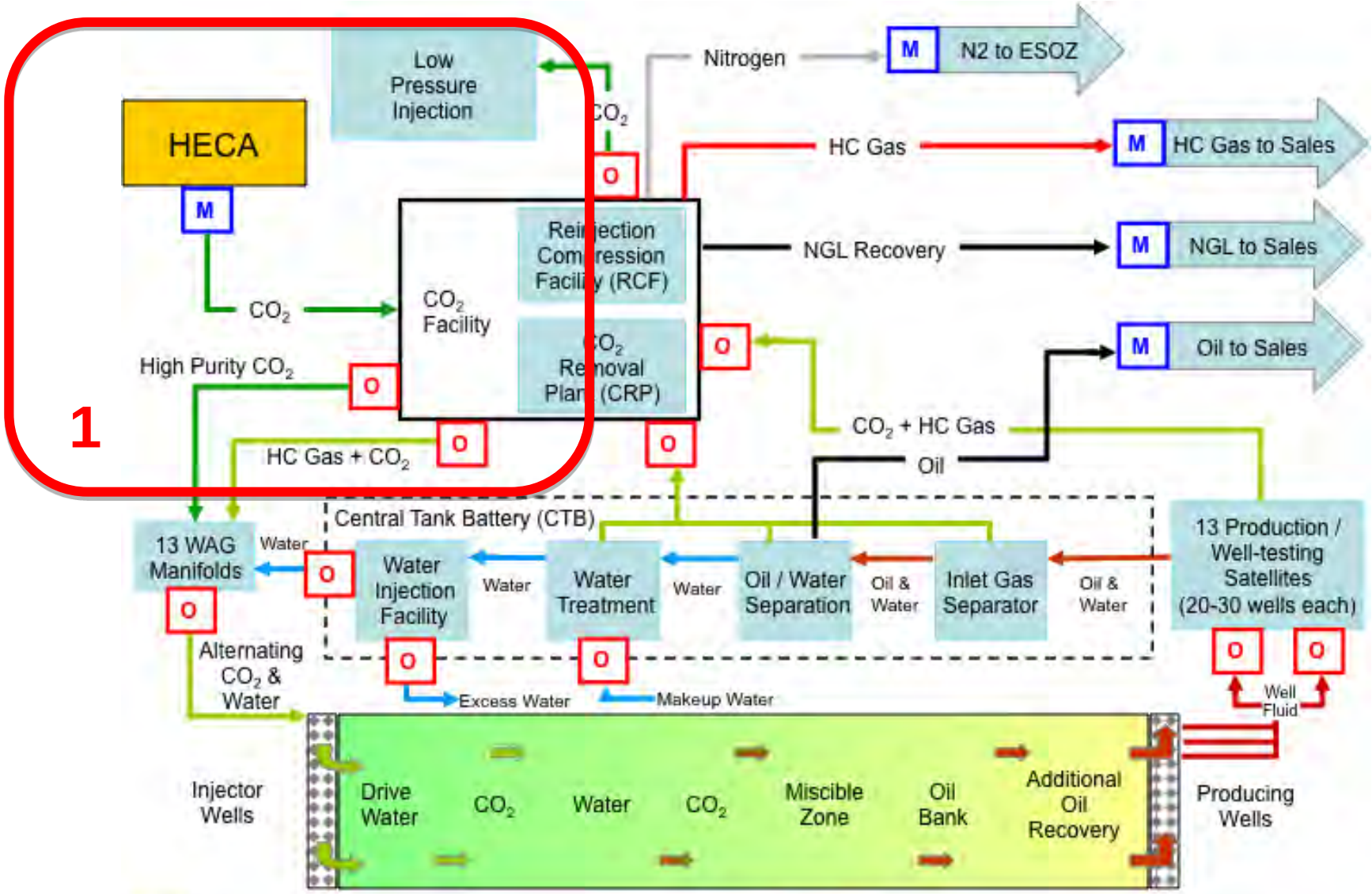

Implement CO_2 injection

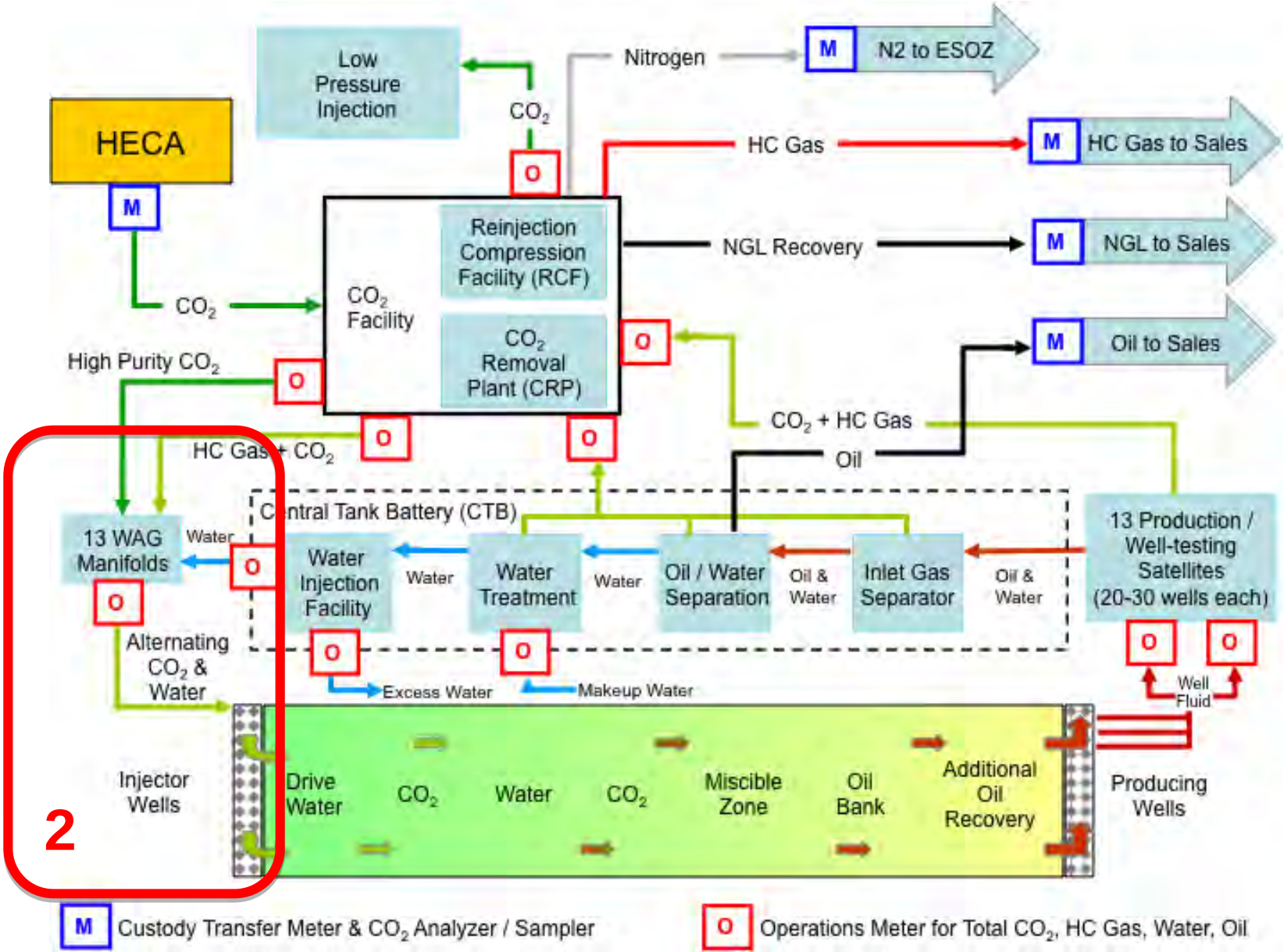

Produce oil/water/CO_2

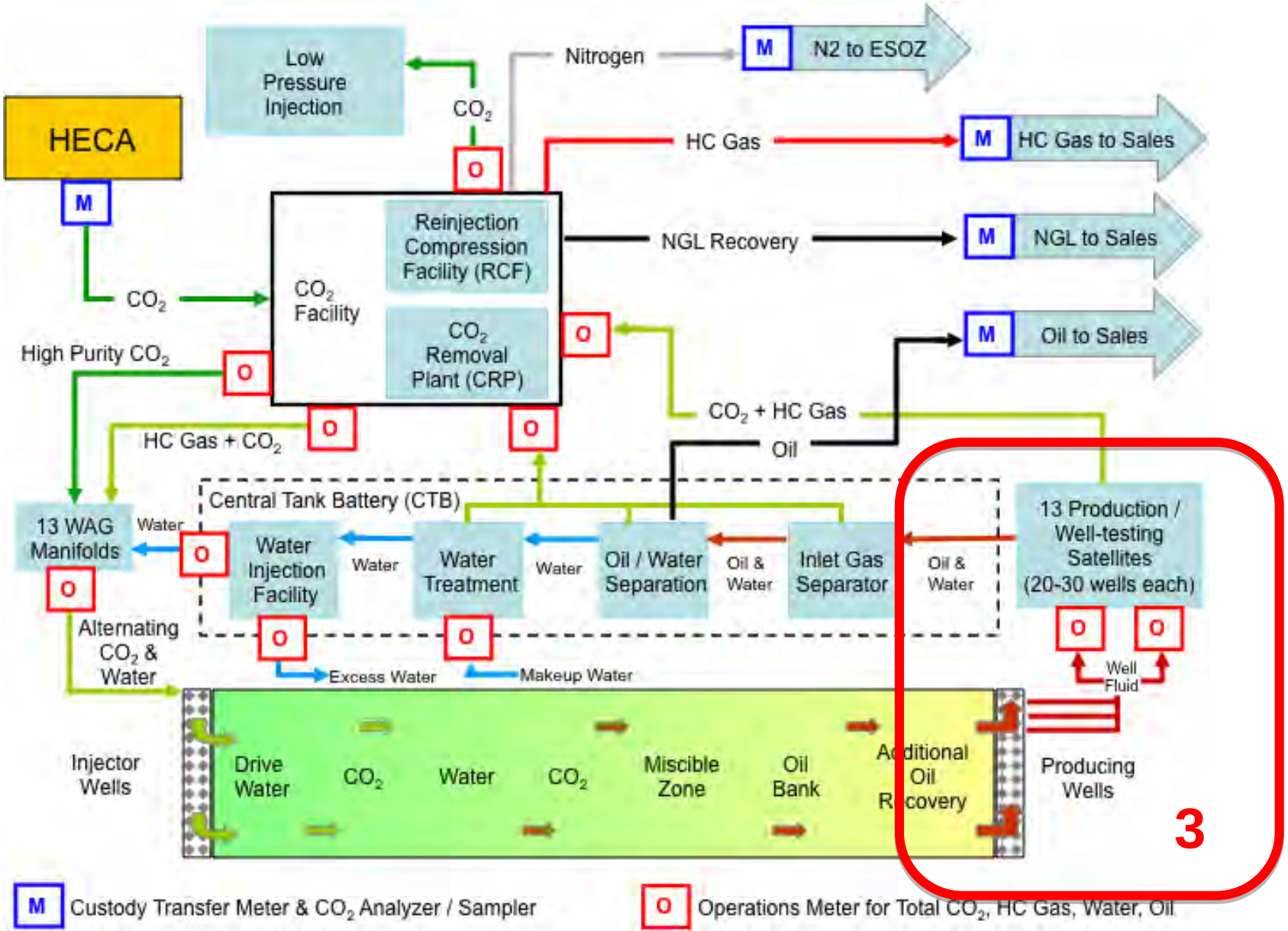

Separate flow streams

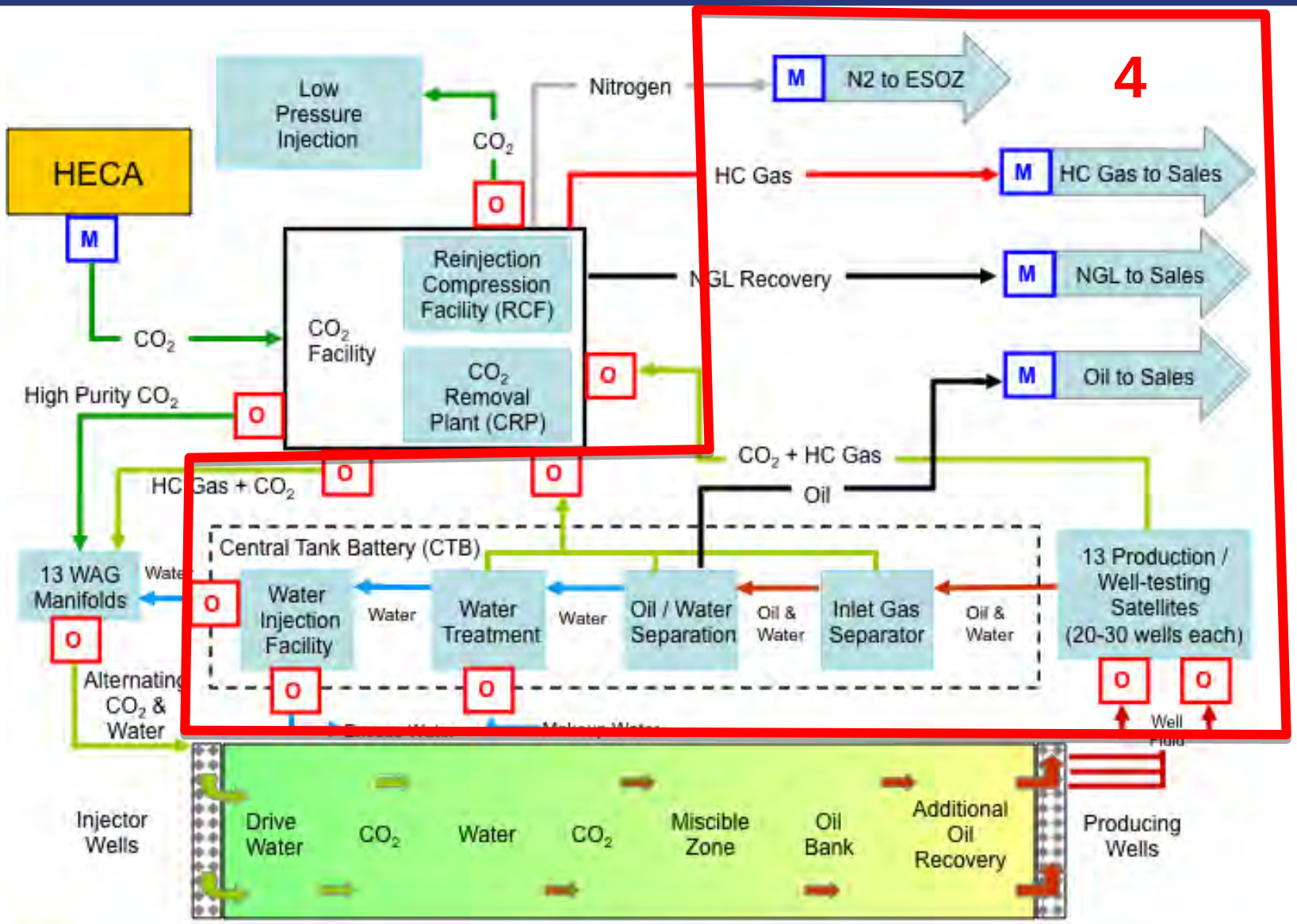

Recompress and recycle produced CO_2

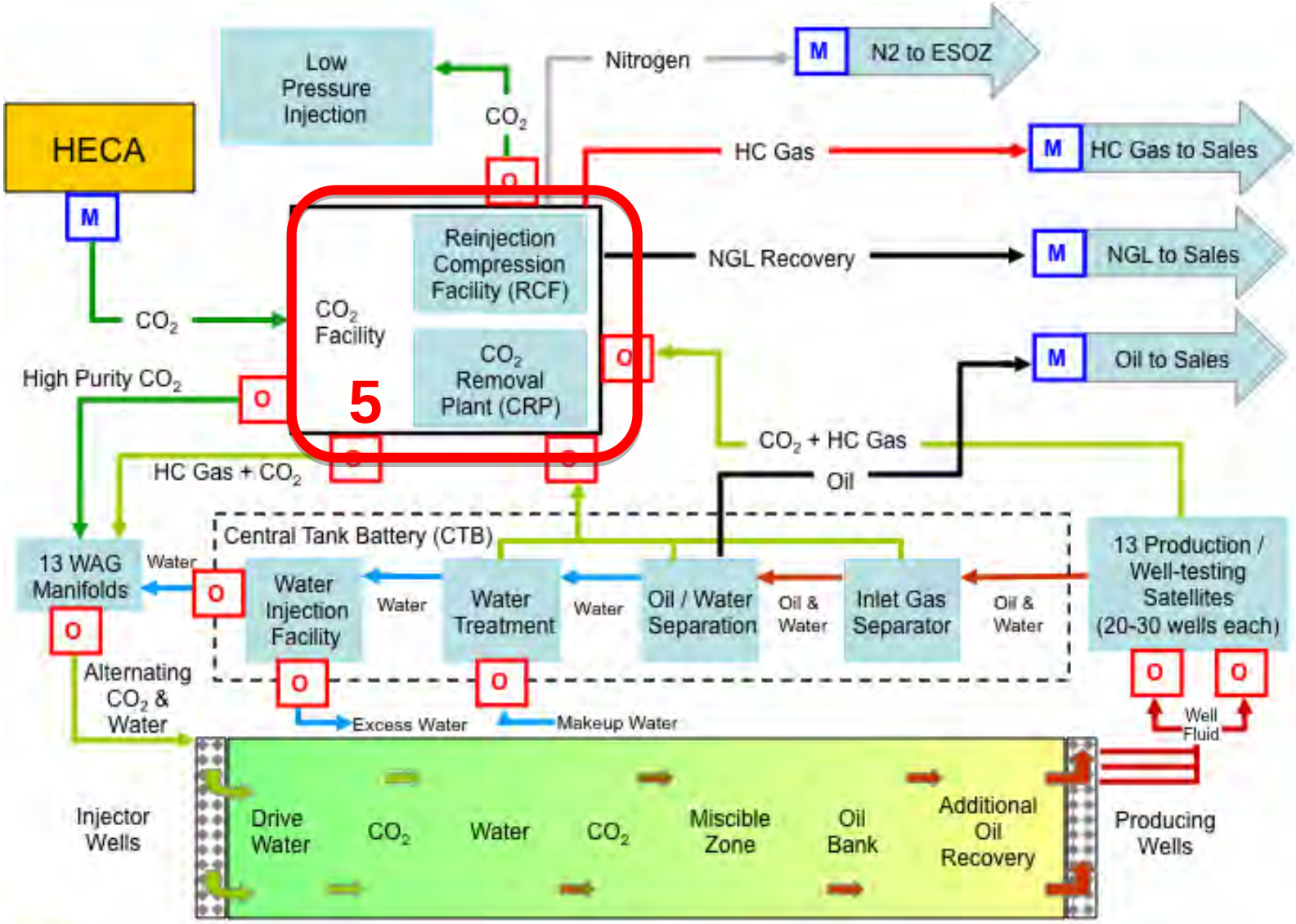

Summary

- Oxy is a global leader in CO_2 EOR
- CO_2 EOR is a closed-loop process that results in CO_2 sequestration
- Stevens reservoirs are ideal for CO_2 EOR/sequestration
- Sophisticated engineering and control systems will be applied to manage CO_2 EOR process
- MRV plan developed to measure, verify & report HECA CO_2 sequestration