GE Review Draft

Inland Empire Energy Center

(01-AFC-17)

Amendment No. 1

Appendices

Submitted by

Inland Empire Energy Center, LLC

March 2005

With Technical Assistance by

CH2MHILL

2485 Natomas Park Drive
Sacramento, California 95833

Appendices

2.0 System Impact Study Application and Completeness Letter
3.1 Air Quality
- 3.1-1 Detailed Emissions Calculations
- 3.1-2 Air Emissions Modeling Inputs
- 3.1-3 Class I Impacts Modeling Analysis
- 3.1-4 Detailed Gas Turbine PM_{10} Emission Information

3.2 Resumes of Biological Surveyors
3.3 Resume of Archaeological Surveyor
3.6 Land Use Transportation Letter
3.8 Human Health Risk Assessment

Appendix 2.0 Project Description

System Impact Study Application Completeness Letter

System Impact Study Application

CALIFORNIA ISO

Generator Interconnection Application Form

The following form is to be filled out for generators that intend to interconnect to the ISO grid. **Three copies** of the completed Application should be sent to:

Gary Brown
New Resource Interconnection
California ISO
P.O. Box 639014
Folsom, CA 95763-9014

Overnight address: 151 Blue Ravine Road, Folsom, CA 95630

It is important that the data provided via this form is accurate. Additional transmission system facility costs, associated with changes in facility requirements, that are due to differences between model data provided by the generation developer and the actual generator test data, may be the responsibility of the generation developer.

1. General Project Information

A. Project Name: Inland Empire Energy Center

B. Project Location:
Street Address: 26226 Antelope Road
City, State: Romoland, CA
Zip Code: 92585

C. Proposed Testing date: July 2007 (need backfeed December 2006)
Proposed Commercial Operation date: May 2008
Proposed Term of Service: 30 years

D. Type of Project
Cogeneration: ____ Reciprocating Engine : ____
Biomass: ____ Steam Turbine: ____
Gas Turbine: ____ Wind: ____
Hydro: ____ Photovoltaic: ____
Combined Cycle: X
Other (please describe): _____

E: Total Generator rated output (kW): 810,000 @ 95 ^{o}F

Individual generator rated output (kW for each unit): 405,000 for Unit 1 and 405,000 for Unit 2
Generator auxiliary load (kW): 20,000 (total for 2 units)
Project net capacity (kW): 790,000
Standby load when generator is off-line (kW): 17,000

F. The interconnection point(s) and the location of interconnection:
Southern California Edison Valley Substation

G. Project Developer
Name: Mike Hatfield, Calpine Corporation
Street Address: 4160 Dublin Blvd.
City, State: Dublin, CA
Zip Code: 94568-3139
Phone Number: 925/479-6716
Fax Number: 925/479-7310
Email Address: mihatfield@calpine.com

H. Site Owner
Name: Calpine Corporation
Street Address: 4160 Dublin Blvd.
City, State: Dublin, CA
Zip Code: 94568-3139
Phone Number: 925/479-6716
Fax Number: 925/479-7310
Email Address: mihatfield@calpine.com

I. Person Responsible for completing this Application
Name: Alan Roth
Title: Senior Electrical Engineer
Company Name: Calpine Corporation
Street Address: 4160 Dublin Blvd.
City, State: Dublin, CA
Zip Code: 94568-3139
Phone Number: 925/479-6728
Fax Number: 925/479-7303
Email Address: alanr@calpine.com

Signature: Alan Roth Date: 12/8/04

2. Provide two original prints and one reproducible copy (no larger than 36" x 24") of the following:

A. Site drawing to scale, showing generator location and point of interconnection with the ISO Grid.
B. Single-line diagram showing applicable equipment such as generating units, step-up transformers, auxiliary transformers, switches/disconnects of the proposed interconnection, including the required protection devices and circuit breakers. For wind generator farms, the one line diagram should include the distribution lines connecting the various groups of generating units, the generator capacitor banks, the step up transformers, the distribution lines, and the substation transformers and capacitor banks at the point of interconnection with the utility.

3. Generator Information

A) Number of Generators: Two
(Please repeat the following items for each generator)
B) Manufacturer: Toshiba
C) Year Manufactured: 2006
D) Nominal Terminal Voltage: 19.5 kV
E) Rated Power Factor (%): 0.90 lag
F) Type (Induction, Synchronous, D.C. with Inverter): Synchronous
H) Phase (3phase or single phase): 3-phase
I) Connection (Delta, Grounded WYE, Ungrounded WYE, impedance grounded): Impedance Grounded
J) Generator Voltage Regulation Range: +/- 5%
K) Generator Power Factor Regulation Range: 0.90 lag – 0.95 lead
L) For combined cycle plants, specify the plant output for an outage of the steam turbine or an outage of a single combustion turbine: 385,000 kw

4. Synchronous Generator – General Information:
(Please repeat the following for each generator)

A. Rated Generator speed (rpm): 3,600
B. Rated MVA: 455
C. Rated Generator Power Factor: 0.90 lag
D. Generator Efficiency at Rated Load (%): 98.8
E. Moment of Inertia (including prime mover): 1.03×10^6 lb-ft^2
F. Inertia Time Constant (on machine base) H: 6.80 MJ/MVA
G. SCR (Short-Circuit Ratio - the ratio of the field current required for rated open-circuit voltage to the field current required for rated short-circuit current): 0.5
J. Please attach generator reactive capability curves.

K. Rated Hydrogen Cooling Pressure in psig (Steam Units only): 60

L. Please attach a plot of generator terminal voltage versus field current that shows the air gap line, the open-circuit saturation curve, and the saturation curve at full load and rated power factor.

6. Excitation System Information

(Please repeat the following for each generator)

A. Indicate the Manufacturer [General Electric] and Type [7 (Aux Bus Fed PPT)] of excitation system used for the generator. For exciter type, please choose from 1 to 8 below or describe the specific excitation system.

1) Rotating DC commutator exciter with continuously acting regulator. The regulator power source is independent of the generator terminal voltage and current.

2) Rotating DC commentator exciter with continuously acting regulator. The regulator power source is bus fed from the generator terminal voltage.

3) Rotating DC commutator exciter with non-continuously acting regulator (i.e., regulator adjustments are made in discrete increments).

4) Rotating AC Alternator Exciter with non-controlled (diode) rectifiers. The regulator power source is independent of the generator terminal voltage and current (not bus-fed).

5) Rotating AC Alternator Exciter with controlled (thyristor) rectifiers. The regulator power source is fed from the exciter output voltage.

6) Rotating AC Alternator Exciter with controlled (thyristor) rectifiers.

7) Static Exciter with controlled (thyristor) rectifiers. The regulator power source is bus-fed from the generator terminal voltage.

8) Static Exciter with controlled (thyristor) rectifiers. The regulator power source is bus-fed from a combination of generator terminal voltage and current (compound-source controlled rectifiers system.

B. Attach a copy of the block diagram of the excitation system from its instruction manual. The diagram should show the input, output, and all feedback loops of the excitation system.

C. Excitation system response ratio (ASA): 4.35 at rated PPT voltage

D. Full load rated exciter output voltage: 574 VDC at 10C field temperature

E. Maximum exciter output voltage (ceiling voltage): 1,231 VDC (exciter loaded)

F. Other comments regarding the excitation system?

_____

_____

_____

7. Power System Stabilizer Information.

(Please repeat the following for each generator. All new generators are required to install PSS unless an exemption has been obtained from WSCC. Such an exemption can be obtained for units that do not have suitable excitation systems.)

A. Manufacturer: General Electric
B. Is the PSS digital or analog? Digital
C. Note the input signal source for the PSS?
_____ Bus frequency _____ Shaft speed _____ Bus Voltage
X – Gen MW and Gen Speed, integral of accelerating power Other (specify source)
D. Please attach a copy of a block diagram of the PSS from the PSS Instruction Manual and the correspondence between dial settings and the time constants or PSS gain.
E: Other comments regarding the PSS?
Block diagram will be according to IEEE PSS2A. Dial settings for the PSS will be in engineering quantities, directly. There are no conversions between input settings and the actual gains, time constants, limits, and washout settings. The installation of the PSS will require application of torsional filters which will be determined during the PSS tuning and commissioning by General Electric PSEC.

8. Turbine-Governor Information
(Please repeat the following for each generator)

Please complete Part A for steam, gas or combined-cycle turbines, Part B for hydro turbines, and Part C for both.

A. Steam, gas or combined-cycle turbines (typical for both units):

1.) List type of unit (Steam, Gas , or Combined-cycle): Combined-Cycle
2.) If steam or combined-cycle, does the turbine system have a reheat process (i.e., both high- and low-pressure turbines)? Yes
3.) If steam with reheat process, or if combined-cycle, indicate in the space provided, the percent of full load power produced by each turbine:

Low pressure turbine or gas turbine: 67% (gas turbine)
High pressure turbine or steam turbine: 33% (steam turbine)

B. Hydro turbines:

1.) Turbine efficiency at rated load:_____%
2.) Length of penstock: _____ft
3.) Average cross-sectional area of the penstock: _____ft2
4.) Typical maximum head (vertical distance from the bottom of the penstock, at the gate, to the water level): _____ft
5.) Is the water supply run-of-the-river or reservoir:_____
6.) Water flow rate at the typical maximum head:_____ft3/sec
7.) Average energy rate:_____ kW-hrs/acre-ft
8.) Estimated yearly energy production: _____kW-hrs

C. Complete this section for each machine, independent of the turbine type.

1.) Turbine manufacturer: General Electric (combustion turbine), Toshiba (steam turbine)
2.) Maximum turbine power output: 405 MW
3.) Minimum turbine power output (while on line): 203 MW
4.) Governor information:
a: Droop setting (speed regulation): 5%
b: Is the governor mechanical-hydraulic or electro-hydraulic (Electro-hydraulic governors have an electronic speed sensor and transducer.)? Electro-hydraulic
c: Other comments regarding the turbine governor system?
_____
_____
_____
_____

9. Synchronous Generator and Associated Equipment – Dynamic Models:

For each Generator, governor, exciter and power system stabilizer, select the appropriate dynamic model from the General Electric PSLF Program Manual and provide the required input data. The manual is available on the GE website at:

https://quickplace01.geextranet.com/QuickPlace/psec_ge_pslf/PageLibrary85256A2A00654741.nsf/h_Index/5F812CDC8192571285256A3B00693C43/?OpenDocument.

The models are listed alphabetically in Table 3.2 and by model type in Table 3.3. These tables are in Section 3.10.3 of the manual. Links to these tables are provided in the Program Manual's Table of Contents. There are links in the tables to a detailed description of the specific model, a definition of each parameter, a list of the output channels, explanatory notes, and a control system block diagram. The block diagrams are also available on the Ca-ISO website.

If you require assistance in developing the models, we suggest you contact General Electric (John Burns 518-385-8150). Accurate models are important to

obtain accurate study results. Costs associated with any changes in facility requirements that are due to differences between model data provided by the generation developer and the actual generator test data, will normally be the responsibility of the generation developer.

10. Induction Generator Data:

A. Rated Generator Power Factor at rated load:_____
B. Moment of Inertia (including prime mover): _____
C. Do you wish reclose blocking? Yes ___, No ___
Note: Sufficient capacitance may be on the line now, or in the future, and the generator may self-excite unexpectedly.

11. Generator Short Circuit Data

For each generator, provide the following reactances expressed in p.u. on the generator base:

∉# X"1 – positive sequence subtransient reactance: 0.195 p.u.
∉# X"2 – negative sequence subtransient reactance: 0.195 p.u.
∉# X"0 – zero sequence subtransient reactance: 0.106 p.u.

Generator Grounding:

A. _____ Solidly grounded
B. __X__ Grounded through an impedance

Impedance value in p.u on generator base: R:_1055_____p.u.
X:_ N/A _____p.u.

C. _N/A_Ungrounded

12. Step-Up Transformer Data

For each step-up transformer, fill out the data form provided in Table 1.

13. Line Data

There is no need to provide data for new lines that are to be planned by the Participating Transmission Owner. However, for transmission lines that are to be planned by the generation developer, please provide the following information:

Nominal Voltage: 500 kV
Line Length (miles): 0.6
Line termination Points: Inland Empire Energy Center Switchyard and SCE Valley Substation

Conductor Type: ACSR Size: 2156 KCMIL,
If bundled : Number per phase: 2, Bundle spacing _18__in.
Phase Configuration: Vertical_____, Horizontal:__X____
Phase Spacing (ft): A-B 38.5, B-C 38.5, C-A: 77.0
Distance of lowest conductor to Ground:_80_____ft
Ground Wire Type:_Steel EHS_ Size: _3/8___ Distance to Ground:_107__ft
Attach Tower Configuration Diagram
Summer line ratings in amperes (normal and emergency)__TBD_____
Resistance (R): __0.00001_____p.u.**
Reactance: (X): __0.00013_____p.u**
Line Charging (B/2): __0.00591_____p.u**
** On 100-MVA and nominal line voltage (kV) Base

14. Will the Participating Transmission Owner be responsible for conducting the System Impact Study and Facility Study or will the project proponent be utilizing another party to complete these studies? Southern California Edison

TABLE 1

TRANSFORMER DATA

UNIT SUT-1 & SUT-2

NUMBER OF TRANSFORMERS PHASE 3

RATED KVA	H Winding	X Winding	Y Winding
Connection (Delta, Wye, Gnd.)	Wye/Gnd	Delta	N/A
55 C Rise	N/A	N/A	N/A
65 C Rise	483 MVA	483 MVA	N/A
RATED VOLTAGE	525 kV	19.5 kV	N/A
BIL	1800	150	N/A
AVAILABLE TAPS (planned or existing)	-5, -2.5, 0, 2.5, 5	N/A	N/A
LOAD TAP CHANGER?	N/A	N/A	N/A
TAP SETTINGS	0	N/A	N/A

COOLING TYPE : OA_____ OA/FA_____ OA/FA/FA X OA/FOA_____

IMPEDANCE	H-X	H-Y	X-Y
Percent	15 %	N/A	N/A
MVA Base	483 MVA	N/A	N/A
Tested Taps	Later	N/A	N/A
WINDING RESISTANCE	H	X	Y
Ohms	0.004 p.u.	N/A	N/A

CURRENT TRANSFORMER RATIOS

H 3 X 1200: 5A (HR) X 20,000/5A Y N/A N 2000/5

PERCENT EXCITING CURRENT 100 % Voltage; 0.25 110% Voltage 0.45

Supply copy of nameplate and manufacture's test report when available

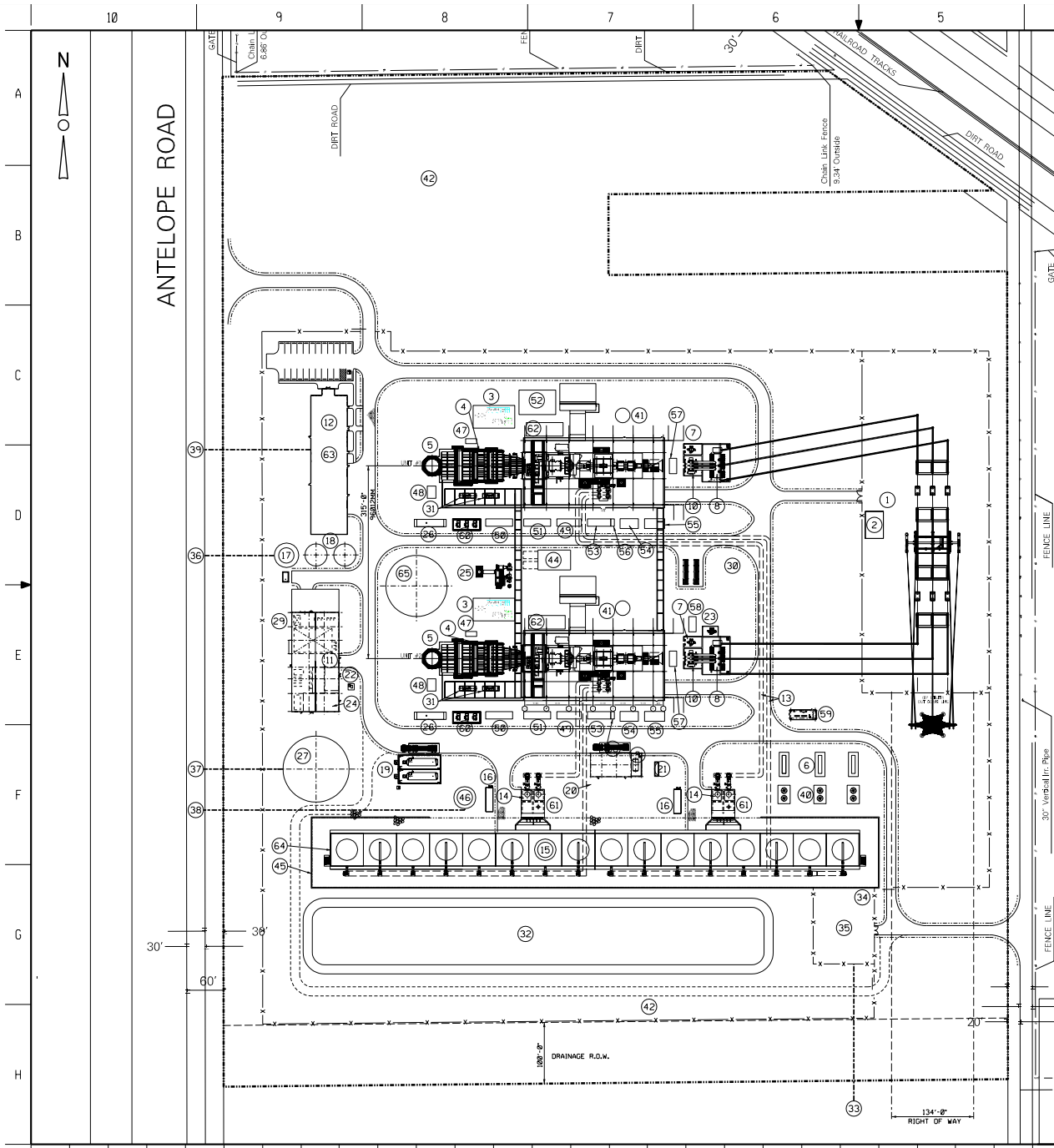

LEGEND

1. ELECTRICAL SUBSTATION AREA
2. SWITCHYARD CONTROL BUILDING
3. GAS CONDITIONING AREA
4. HRSG
5. HRSG STACK
6. GAS COMPRESSORS
7. EXCITATION TRANSFORMER
8. GENERATOR STEP-UP TRANSFORMER
9. ACID STORAGE TANK AND FEED SKID
10. UNIT AUXILIARY TRANSFORMER
11. WATER TREATMENT BLDG
12. ADMIN/CONTROL ROOM/MAINTENANCE/WAREHOUSE BLDG
13. CIRCULATING WATER LINES
14. CIRCULATING WATER PUMPS
15. COOLING TOWER
16. COOLING TOWER PDC
17. POTABLE/FIRE PROTECTION WATER STORAGE TANK
18. DEMIN WATER STORAGE TANKS
19. AMMONIA STORAGE TANK
20. COOLING TOWER CHEMICAL FEED ENCLOSURE
21. OIL/WATER SEPARATOR
22. CHEMICAL AREA SUMP & PUMP
23. ISOLATION TRANSFORMER
24. WATER TREATMENT LOAD CENTER
25. AUXILIARY BOILER
26. EMERGENCY GENERATORS
27. RECYCLED WATER STORAGE TANK
28. NOT USED
29. DIESEL FIRE PUMP
30. HYDROGEN TUBE TRAILER
31. BOILER FEED PUMPS
32. SEDIMENT POND / STORMWATER BASIN
33. NATURAL GAS LINE
34. NATURAL GAS TERMINAL POINT
35. NATURAL GAS METERING AREA
36. POT/FIRE WATER TERMINAL POINT
37. RECYCLED WATER TERMINAL POINT
38. NON-RECLAIMABLE WASTEWATER TERMINAL POINT
39. SANITARY SEWER TERMINAL POINT
40. FIN FAN COOLERS
41. CONDENSATE STORAGE TANK
42. CONSTRUCTION LAYDOWN AREA
43. NOT USED
44. CHILLER
45. ACOUSTIC WALL
46. WASTEWATER STORAGE TANK
47. NH3 SKID
48. CEMS HRSG PDC
49. GT CONTROLS COMP
50. 480V UNIT AUXILIARIES/ESS SERVICE
51. ST/HRSG CONTROLS COMP
52. UNIT CHARACTERIZATION TEST TRAILER
53. BOP CONTROL COMP
54. 4.16KV SWGR BUS B
55. 4.16KV SWGR BUS A
56. 125VDC BATTERY COMP
57. EX2100 COMP
58. LS 2100 COMPARTMENT
59. GAS COMPRESSOR PDC
60. UAS TRANSFORMERS
61. AUX CIRC WATER PUMP
62. LUBE OIL SKID (w/ CONTAINMENT)
63. ADMIN BLDG LOAD CENTER
64. COOLING TOWER FAN DECK ACOUSTIC BARRIER
65. THERMAL STORAGE TANK

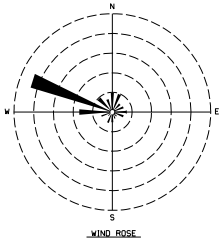

WIND ROSE

ITEM	UTM METERS (NAD27)	
	NORTH	EAST
UNIT 1 HRSG STACK	3733075	484284
UNIT 1 EMERGENCY GENERATOR STACK	3733046	484281
UNIT 2 HRSG STACK	3732974	484284
UNIT 2 EMERGENCY GENERATOR STACK	3732950	484281
AUX BOILER STACK	3733022	484308
DIESEL FIRE PUMP STACK	3733018	484211

LEGEND:
- GRAVEL
- ASPHALT
- CONCRETE

80 0 80 160 240
SCALE IN FEET

PRELIMINARY STATUS LDE	DATE	REPRESENTS GENERAL DESIGN CONCEPTS BASED ON ASSUMPTIONS. REVIEWED NOT CHECKED.
APPROVED STATUS LDE	DATE	REPRESENTS REVIEWED AND APPROVED DESIGN. ANY PORTION MARKED "HOLD" RETAINS PRELIMINARY STATUS.

ORIGINATING PERSONNEL
DRAWN BY: VJB
CHECKED BY
LEAD DESIGNER
ENGINEER
PROJECT ENGINEERING MANAGER
PROJECT MANAGER

PROFESSIONAL ENGINEER'S SEAL
ORIGINALLY PREPARED UNDER THE RESPONSIBLE SUPERVISION OF
REG. STATE:
LIC. NO.: DATE:

PARSONS E&C

CLIENT/PROJECT TITLE
CALPINE
INLAND EMPIRE
ENERGY CENTER

GENERAL ARRANGEMENT
SITE PLAN

SCALE 1" = 80'
PE&C DWG. NO. IEEC-1-SK-BLD-002-001
REV M

REV	DATE	DRAWN	CHECKED	LEAD DESIGNER	ENGINEER	LEAD DISC ENGINEER	PROJ ENGR MANAGER	PROJECT MANAGER
M	18-Dec-04	VJB						
L	18-Dec-04	WCE						
K	29-Oct-04	VJB						
J	24-Oct-04	VJB						
I	17-Oct-04	VJB						
H	14-Oct-04	VJB						
G	02-Oct-04	VJB						

REV: ISSUED FOR PERMIT; CALPINE COMMENTS; ISSUED FOR CLIENT REVIEW; ISSUED FOR CLIENT REVIEW; ISSUED FOR CLIENT REVIEW; ISSUED FOR CLIENT REVIEW; ISSUED FOR CLIENT REVIEW

FAC | PIPING | I & C | ELECT | MECH | CIVIL | STRUC

PE&C-FILE: ieec-1-sk-bld-002-001.dgn
PE&C-DATE: 28-Sep-04 17:05

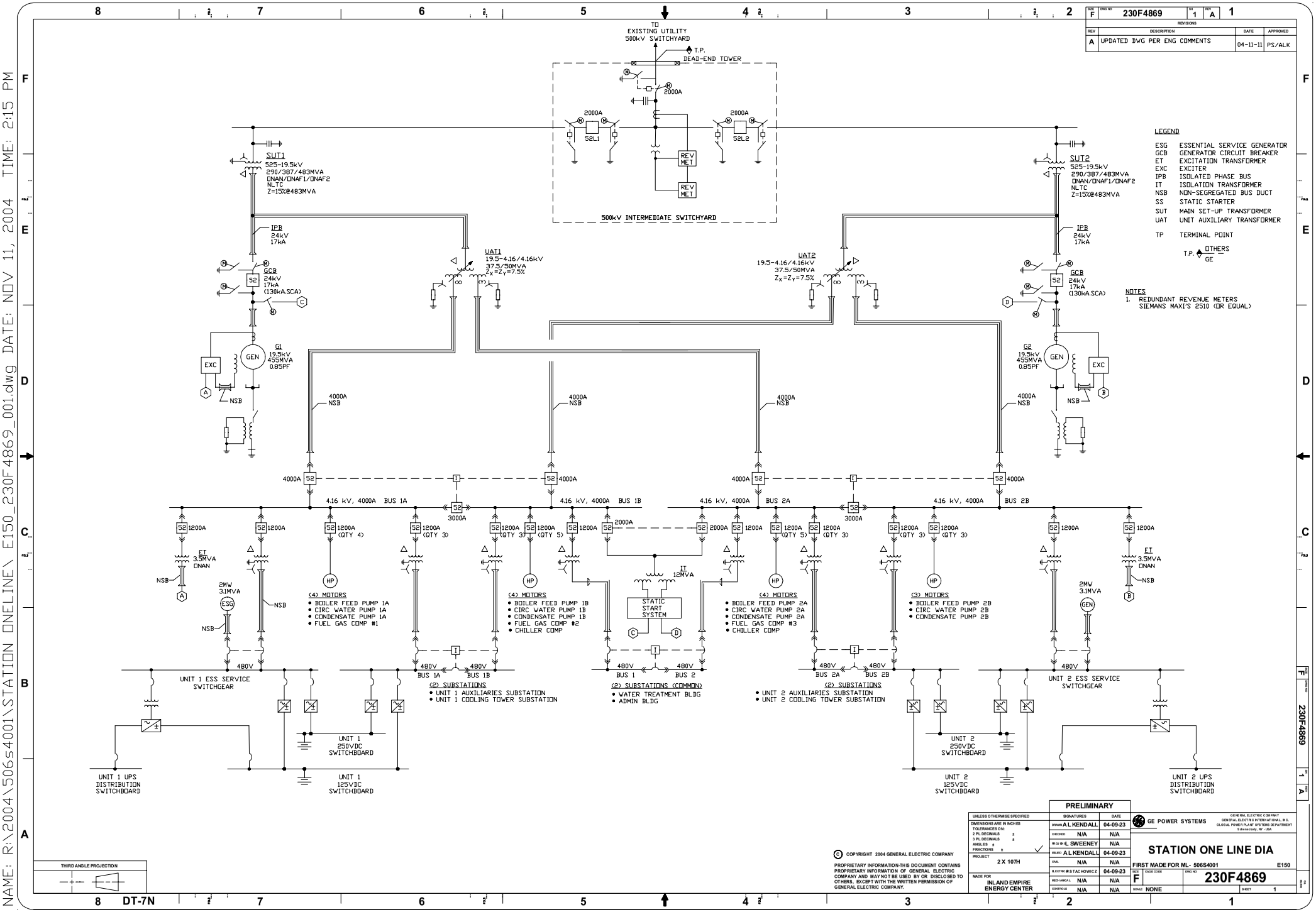
TO EXISTING UTILITY 500kV SWITCHYARD
T.P.
DEAD-END TOWER
2000A
52L1
52L2
REV MET
500kV INTERMEDIATE SWITCHYARD
SUT1
525-19.5kV
290/387/483MVA
ONAN/ONAF1/ONAF2
NLTC
Z=15%@483MVA
SUT2
525-19.5kV
290/387/483MVA
ONAN/ONAF1/ONAF2
NLTC
Z=15%@483MVA
IPB
24kV
17kA
GCB
24kV
17kA
(130kA.SCA)
UAT1
19.5-4.16/4.16kV
37.5/50MVA
Zx=Zy=7.5%
UAT2
19.5-4.16/4.16kV
37.5/50MVA
Zx=Zy=7.5%
G1
19.5kV
455MVA
0.85PF
G2
19.5kV
455MVA
0.85PF
GEN
EXC
NSB
4000A
4.16 kV, 4000A BUS 1A
4.16 kV, 4000A BUS 1B
4.16 kV, 4000A BUS 2A
4.16 kV, 4000A BUS 2B
3000A
1200A
(QTY 4)
(QTY 3)
(QTY 5)
2000A
ET
3.5MVA
ONAN
2MW
3.1MVA
ESG
HP
(4) MOTORS
• BOILER FEED PUMP 1A
• CIRC WATER PUMP 1A
• CONDENSATE PUMP 1A
• FUEL GAS COMP #1
(4) MOTORS
• BOILER FEED PUMP 1B
• CIRC WATER PUMP 1B
• CONDENSATE PUMP 1B
• FUEL GAS COMP #2
• CHILLER COMP
IT
12MVA
STATIC START SYSTEM
(4) MOTORS
• BOILER FEED PUMP 2A
• CIRC WATER PUMP 2A
• CONDENSATE PUMP 2A
• FUEL GAS COMP #3
• CHILLER COMP
(3) MOTORS
• BOILER FEED PUMP 2B
• CIRC WATER PUMP 2B
• CONDENSATE PUMP 2B
480V
BUS 1A
BUS 1B
BUS 1
BUS 2
BUS 2A
BUS 2B
UNIT 1 ESS SERVICE SWITCHGEAR
(2) SUBSTATIONS
• UNIT 1 AUXILIARIES SUBSTATION
• UNIT 1 COOLING TOWER SUBSTATION
(2) SUBSTATIONS (COMMON)
• WATER TREATMENT BLDG
• ADMIN BLDG
(2) SUBSTATIONS
• UNIT 2 AUXILIARIES SUBSTATION
• UNIT 2 COOLING TOWER SUBSTATION
UNIT 2 ESS SERVICE SWITCHGEAR
UNIT 1 250VDC SWITCHBOARD
UNIT 1 125VDC SWITCHBOARD
UNIT 2 250VDC SWITCHBOARD
UNIT 2 125VDC SWITCHBOARD
UNIT 1 UPS DISTRIBUTION SWITCHBOARD
UNIT 2 UPS DISTRIBUTION SWITCHBOARD
LEGEND
ESG ESSENTIAL SERVICE GENERATOR
GCB GENERATOR CIRCUIT BREAKER
ET EXCITATION TRANSFORMER
EXC EXCITER
IPB ISOLATED PHASE BUS
IT ISOLATION TRANSFORMER
NSB NON-SEGREGATED BUS DUCT
SS STATIC STARTER
SUT MAIN SET-UP TRANSFORMER
UAT UNIT AUXILIARY TRANSFORMER
TP TERMINAL POINT
T.P. OTHERS GE
NOTES
1. REDUNDANT REVENUE METERS SIEMANS MAXI'S 2510 (OR EQUAL)
THIRD ANGLE PROJECTION
DT-7N
PRELIMINARY
UNLESS OTHERWISE SPECIFIED
DIMENSIONS ARE IN INCHES
TOLERANCES ON:
2 PL DECIMALS ±
3 PL DECIMALS ±
ANGLES ±
FRACTIONS ±
PROJECT 2 X 107H
MADE FOR INLAND EMPIRE ENERGY CENTER
SIGNATURES DATE
DRAWN A.L. KENDALL 04-09-23
CHECKED N/A N/A
PROJ ENG L. SWEENEY N/A
ISSUED A.L. KENDALL 04-09-23
CIVIL N/A N/A
ELECTRICAL S. STACHOWICZ 04-09-23
MECH ANALYS. N/A N/A
CONTROLS N/A N/A
GE POWER SYSTEMS
GENERAL ELECTRIC COMPANY
GENERAL ELECTRIC INTERNATIONAL, INC
GLOBAL POWER PLANT SYSTEMS DEPARTMENT
Schenectady, NY - USA
STATION ONE LINE DIA
FIRST MADE FOR ML- 506S4001 E150
SIZE F
DWG NO 230F4869
SCALE NONE
SHEET 1
© COPYRIGHT 2004 GENERAL ELECTRIC COMPANY
PROPRIETARY INFORMATION-THIS DOCUMENT CONTAINS PROPRIETARY INFORMATION OF GENERAL ELECTRIC COMPANY AND MAY NOT BE USED BY OR DISCLOSED TO OTHERS, EXCEPT WITH THE WRITTEN PERMISSION OF GENERAL ELECTRIC COMPANY.
NAME: R:\2004\506s4001\STATION ONELINE\ E150_230F4869_001.dwg DATE: NOV 11, 2004 TIME: 2:15 PM

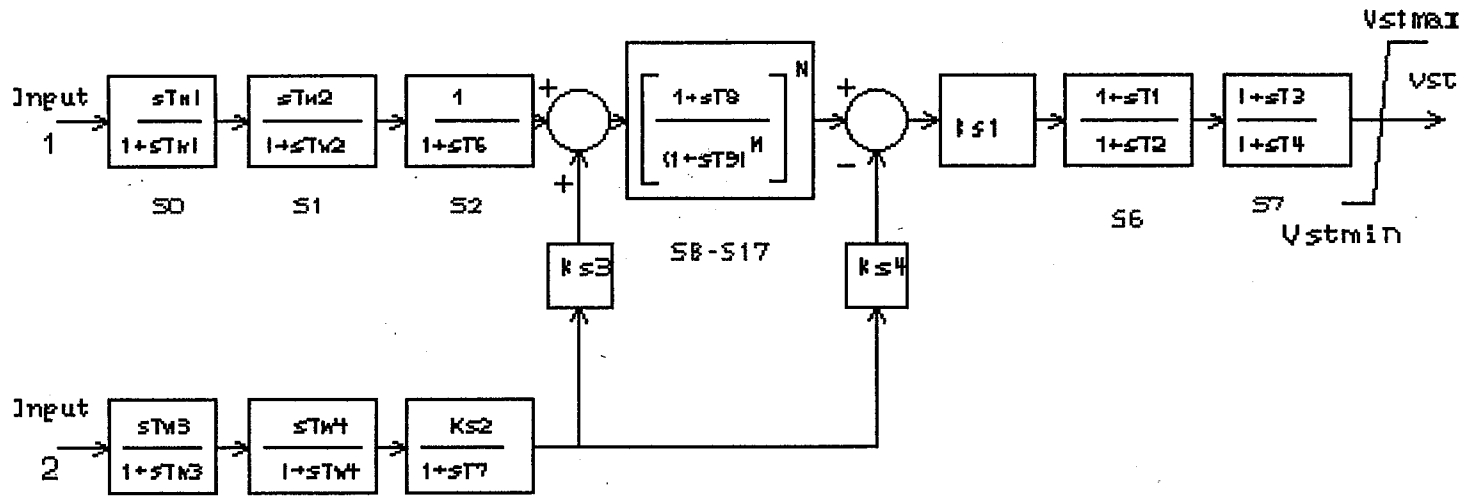

pss2a Transfer Function Diagram

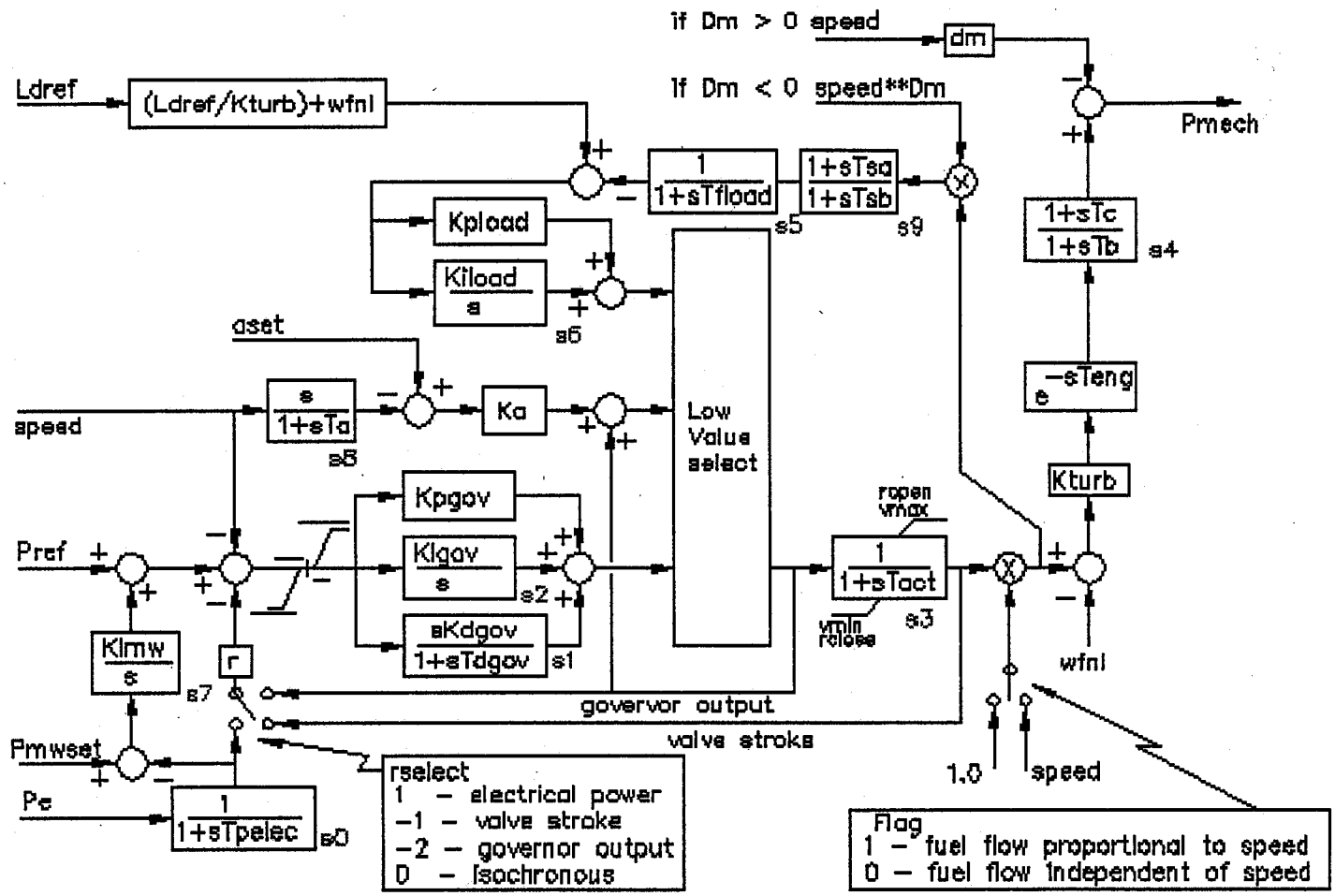

ggov1 Model Transfer Function Model

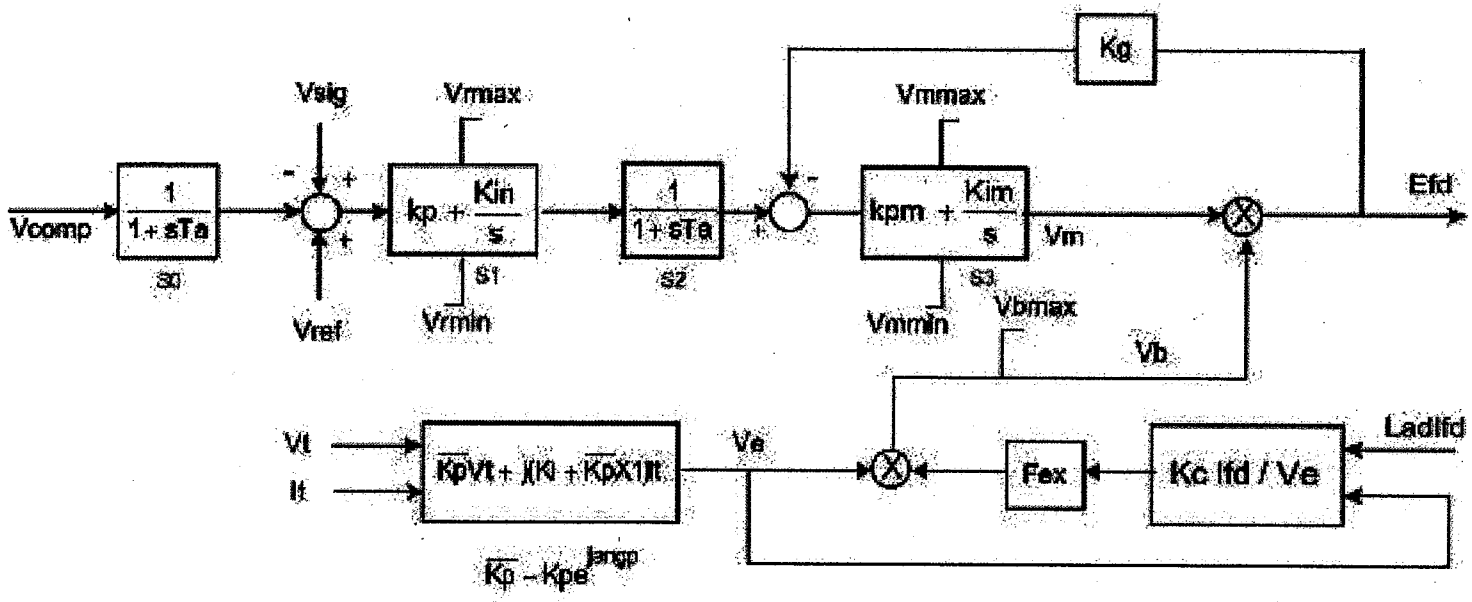

exst4b Model Transfer Function Diagram

TOSHIBA No. LST-GEH-7HSD-0001 Rev. 1

APPLICATION ; 7H STANDARD GENERATOR

GENERATOR DATA SHEET

GE							
TIC-SBO							
KA-PU							
KA-IU							
KAKEI-T							
HATSU-D							
DENKEISETSU							
KUUSETSU							
		1	April 12, '04	Revised: Cooler Data, V Curve, Reactive Capability Curve, Output vs Cooling Water Temp.	O. Satoh	M. Yamakawa	O. Satoh
		0	Mar. 15, '04	First Issue	O. Satoh	M. Yamakawa	O. Satoh
TOTAL							
DISTRIBUTION		REV	DATE	DESCRIPTION	APPROVED	CHECKED	PREPARED

ISSUED BY Plant Engineering Group
Electrical Engineering Dept.
TOSHIBA CORPORATION

1. Rated data

· Nominal rated capacity at 410kPa hydrogen pressure	455	MVA
· Power factor	0.85	(Lag)
· Voltage	19.5	kV
· Normal voltage range	± 5	%
· Current	13,472	A
· Frequency	60	Hz
· Speed	3,600	min
· Type-Form(Supplier's identification)	TAKS-ICH	
· Number of phases	3	
· Number of poles	2	
· Hydrogen gas pressure	60	psig
· Insulation class – Stator	Class F	
· Insulation class – Rotor	Class F	
· Short-circuit ratio	NLT0.5	

2. Characteristic values and currents

2.1 Reactances, Resistances, Capacitance

Reactance Data (Per Unit)	Direct Axis		Quadrature Axis	
Synchronous (saturated)	Xdv	1.89	Xqv	1.85
Synchronous (unsaturated)	Xdi	2.1	Xqi	2.06
Transient (saturated)	X'dv	0.249	X'qv	0.39
Transient (unsaturated)	X'di	0.277	X'q	0.458
Subtransient (saturated)	X"dv	0.195	X"qv	0.195
Subtransient (unsaturated)	X"di	0.229	X"qi	0.229
Negative sequence (saturated)	X2v	0.195		
Negative sequence (unsaturated)	X2i	0.229		
Zero sequence (saturated)	X0v	0.106		
Zero sequence (unsaturated)	X0i	0.106		
Leakage (saturated)	Xlv	0.165		
Leakage (unsaturated)	Xli	0.202		
· Efficiency at full load, rated power factor			98.8	%
· Stator Winding Resistance per phase at95℃			0.00102	Ohms
· R1 (positive sequence) at 100℃			0.0024	PU
· R2 (negative sequence) at 100℃			0.052	PU
· R0 (zero sequence) at 100℃			0.0036	PU
· Three Phase Stator Winding Capacitance			1.83	micro F
· One Phase Stator Winding Capacitance			0.61	micro F
· R_f@25℃,Field Resistance			0.213	Ohms
· R_f@100℃,Field Resistance			0.275	Ohms
· Rotor Inertia, Wk^2			176000	lb_f-ft^2
· Maximum V/Hz at 10% Speed (Lowest Hold Point)			0.64	

· Generator Losses vs % Speed (includes Bearings and Windage Losses)*

rpm(%)	0	5	10	20	30	40	50	60	70	80	90
losses(kW)*	0	7.9	22.6	67.5	133.6	223.0	338.9	484.9	664.5	881.7	1140.4

*Mechanical Losses only, not Include Electrical Losses

E:\interconnects\inland empire\7H GEN Data R1 LST-GEN-7HSD-0001.tif

2.2 Excitation Data

I_{FFL} is the Amps Field Full Load.	2090	A
I_{FNL} is the Amps Field No Load.	737	A
V_{FFL} is the Volts on the Field Current at Full Load.	583	V
V_{FNL} is the Volts on the Field Current at No Load.	173	V
Field Current Margin (Exciter Design Amps-EDA)	2570	A
Field Operating Temperature	105	℃
Pole Slip Voltage	1500	V

2.3 Time constants

Time Constant Data (sec)	Direct Axis		Quadrature Axis	
Short-Circuit Transient	T'd	0.8	T'q	0.29
Short-Circuit Subtransient	T"d	0.025	T"q	0.025
Open-Circuit Transient	T'do	6.1	T'qo	1.3
Open-Circuit Subtransient	T"do	0.030	T"qo	0.050
Short-Circuit Armature	Ta	0.44		

3. Cooling methods, temperatures and temperature rises

3.1 Cooling methods

Stator	Core	Hydrogen cooled
	Winding	Indirect hydrogen cooled
Rotor	Winding	Direct hydrogen cooled

3.2 Maximum temperatures or temperature rises at rated data

Quantities	Units	Values
Temperature rise of stator winding	K	54
Maximum temperature of stator winding	℃	130
Temperature rise of rotor winding	K	64
Maximum temperature of rotor winding	℃	130

4 Mechanical data, dimensions and weights

- Weight
  - Stator Assembly 582,120 lbs
  - Rotor Assembly 117,530 lbs
  - Bearing Assembly 57,330 lbs
  - H2 Gas Coolers 15,880 lbs
  - Support Pads 7,720 lbs
  - MISC. 7,720 lbs
  - Total weight 788,300 lbs
- Assembly drawings 1KC002251
- Overall length of generator including exciter set 43'-2.9" inch
- Volume of hydrogen space in machine 3885 ft^3
- Rotating direction (viewed from collector end) Counter Clock Wise

E:\interconnects\inland empire\7H GEN Data R1 LST-GEN-7HSD-0001.tif

5 Hydrogen Gas Cooler

	@650MVA-0.85PF	
- Material – Tube	CuNi	
- Material – Tube Sheet	Naval Brass	
- Fouling factor in tube	0.0001	m3*Hr*℃/kcal
- ASME stamp	Not Applied	
- Quantity of cooler	4	
- Quantity of working cooler	4	
- Coolant flow per cooler	766.2	GPM
- Total coolant flow	3064.7	GPM
- Cold coolant (water) temperature	42.8	° F
- Hot coolant (water) temperature	56.66	° F
- Cold gas temperature	59	° F
- Heat transfer area per cooler	3789	ft^2
- Heat exchanger	2.12235E+07	Btu/hour
- Pressure drop	9.4	psi
- Cooling water quality	100%Freshwater	No anti-freezing

Four (4) horizontally mounted on the top of frame

6 Armature Current for 3-phase Short Circuit during Static Start

Speed (%)	SYMMETRICAL RMS[A]	SYMMETRICAL Peak[A]	ASYMMETRICAL RMS[A]	ASYMMETRICAL Peak[A]
5	41390	58534	71690	101385
10	41570	58789	71990	101809
15	41740	59029	72290	102233
20	41920	59284	72600	102672
25	44000	62225	76210	107777
30	44120	62395	76410	108060
35	42630	60288	73840	104426
40	37350	52821	55870	79012
45	31540	44604	54630	77258
50	29400	41578	50920	72012
55	26980	38155	46730	66086
60	24960	35299	43230	61136
65	22440	31735	38870	54970
70	20780	29387	35990	50898
75	19420	27464	33640	47574
80	18260	25824	31630	44732
85	17100	24183	29610	41875
90	16000	22627	27710	39188

7 Performance Curves : Attached
- Estimated Saturation & Synchronous Impedance Curves
- Estimated "V" Curves
- Estimated Reactive Capability Curves
- Permissible Short Time Armature Volt/Hertz Curve
- Permissible Short Time Field Voltage Curve
- Permissible Short Time Armature Current Curve
- Estimated Generator Loss Curves
- Output vs Cooling Water Temperature

E:\interconnects\inland empire\7H GEN Data R1 LST-GEN-7HSD-0001.tif

ESTIMATED SATURATION AND SYNCHRONOUS IMPEDANCE CURVES

TAKS-2P-455000KVA-3600RPM-1CH-19500V-13472A-60HZ-0.85PF

HYDROGEN PRESSURE 60.0PSIG

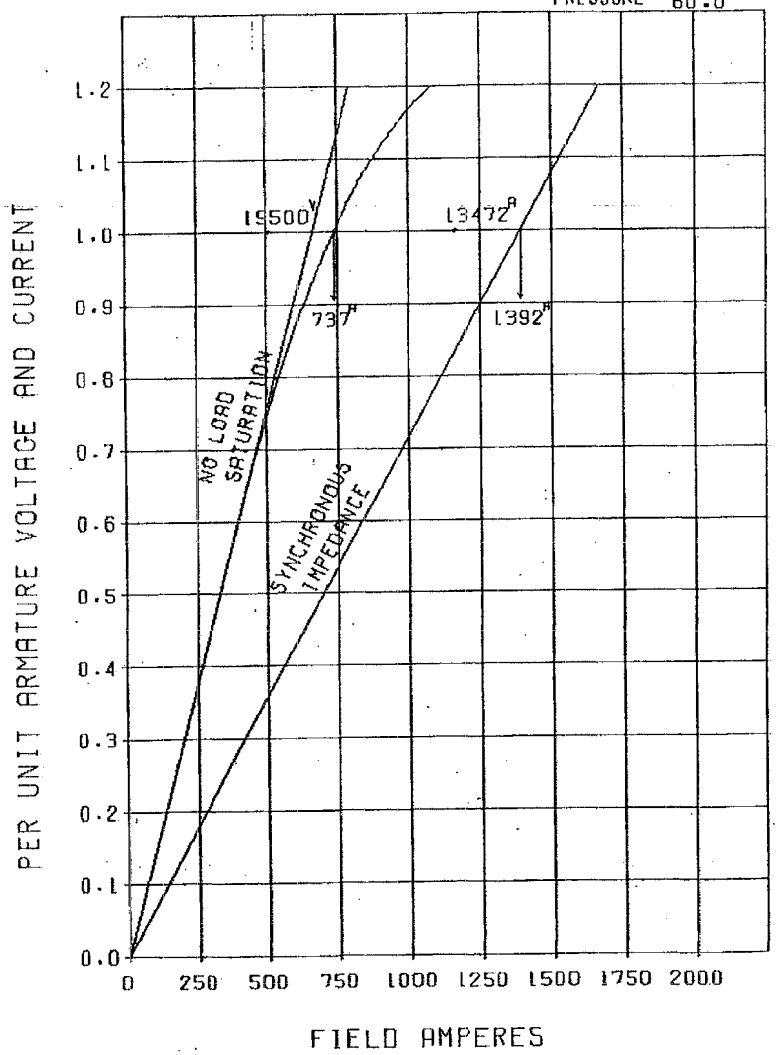

E:\interconnects\inland empire\7H GEN Data R1 LST-GEN-7HSD-0001.tif

ESTIMATED "V" CURVES

TAKS-2P-455000kVA-3600rpm-ICH-19500V-13472A-60Hz-0.85PF

Hydrogen Pressure 410 kPag

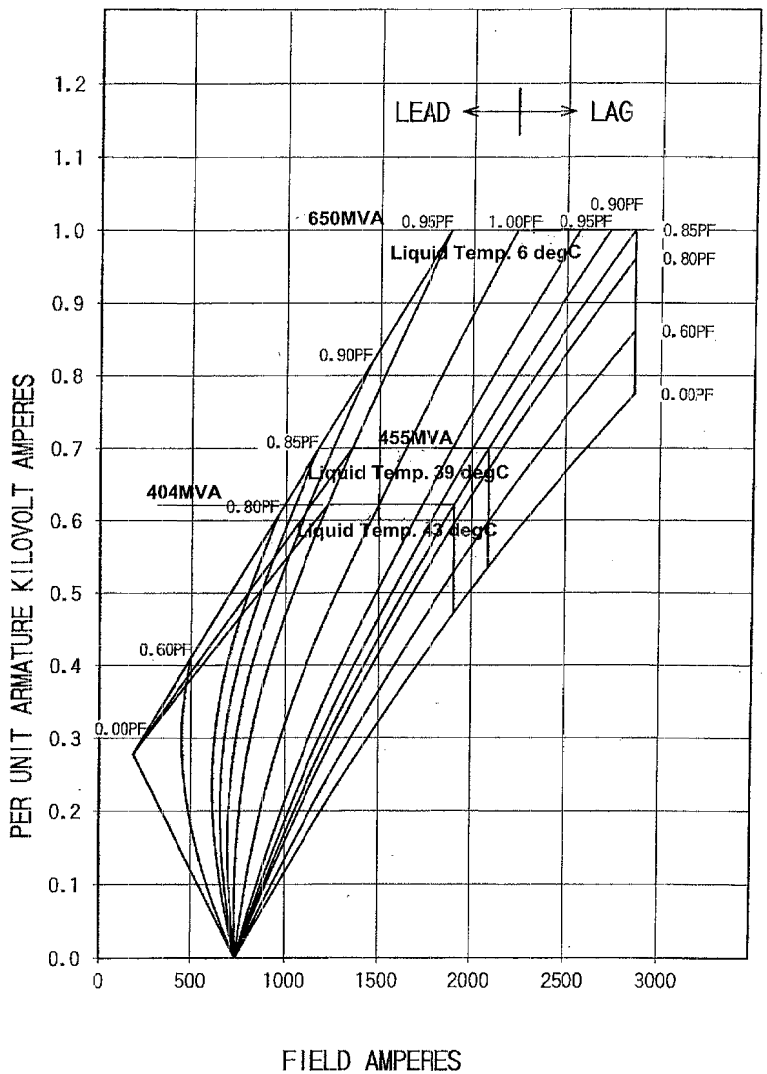

E:\interconnects\inland empire\7H GEN Data R1 LST-GEN-7HSD-0001.tif

ESTIMATED REACTIVE CAPABILITY CURVES

TAKS-2P-455000kVA-3600rpm-ICH-19500V-13472A-60Hz-0.85PF

Hydrogen Pressure 410 kPag

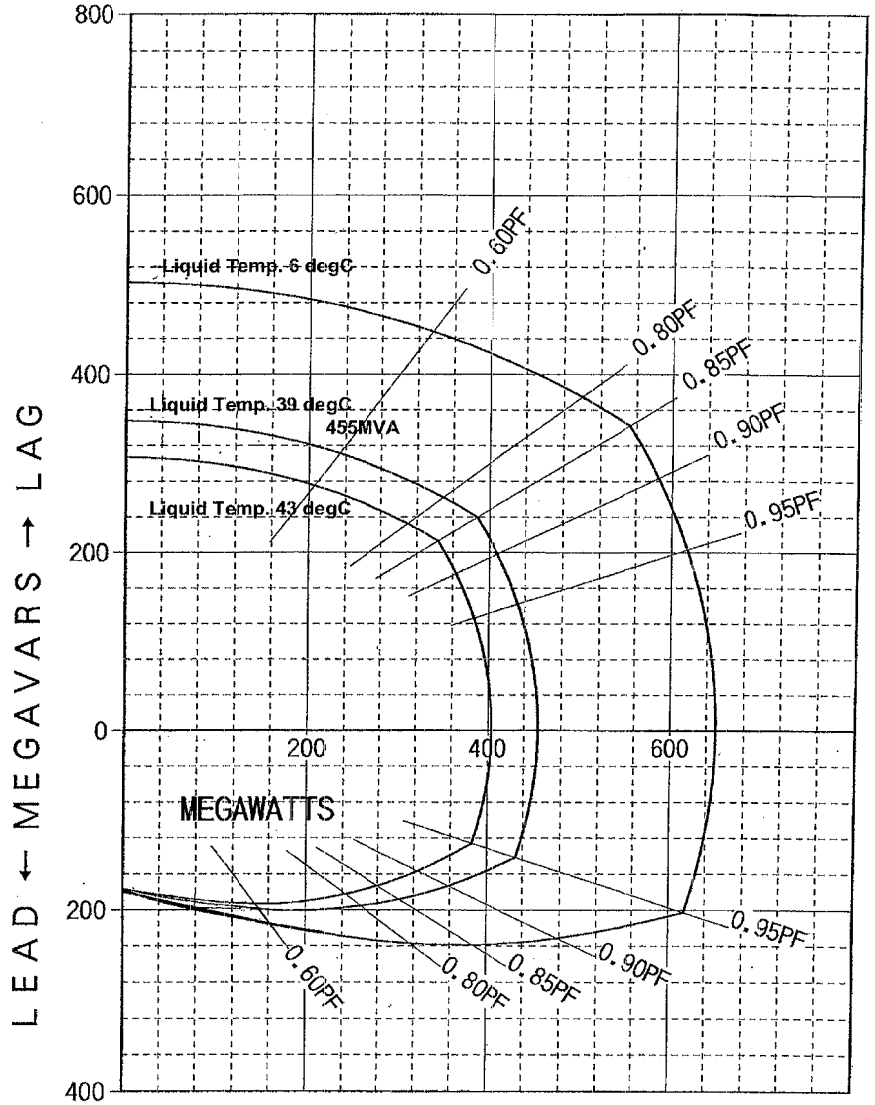

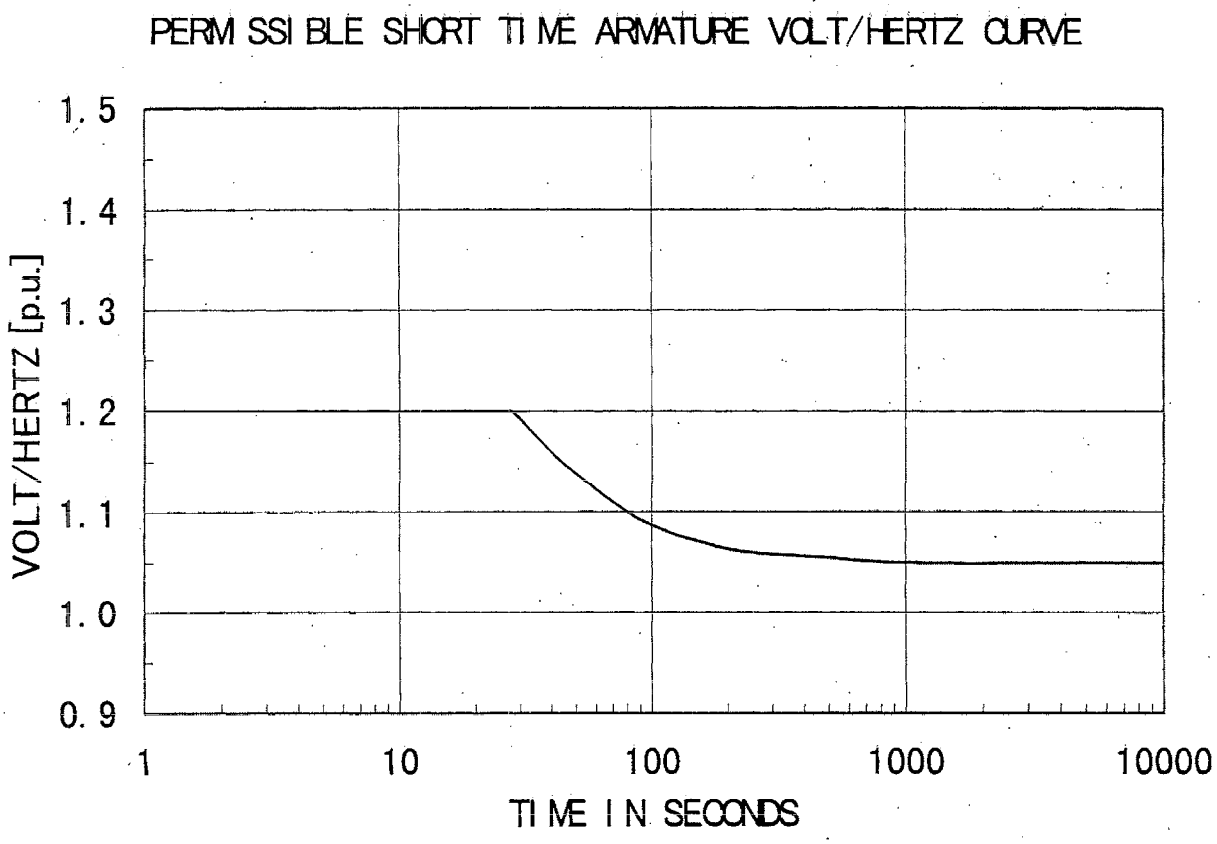
PERMISSIBLE SHORT TIME ARMATURE VOLT/HERTZ CURVE
VOLT/HERTZ [p.u.]
1.5
1.4
1.3
1.2
1.1
1.0
0.9
1
10
100
1000
10000
TIME IN SECONDS

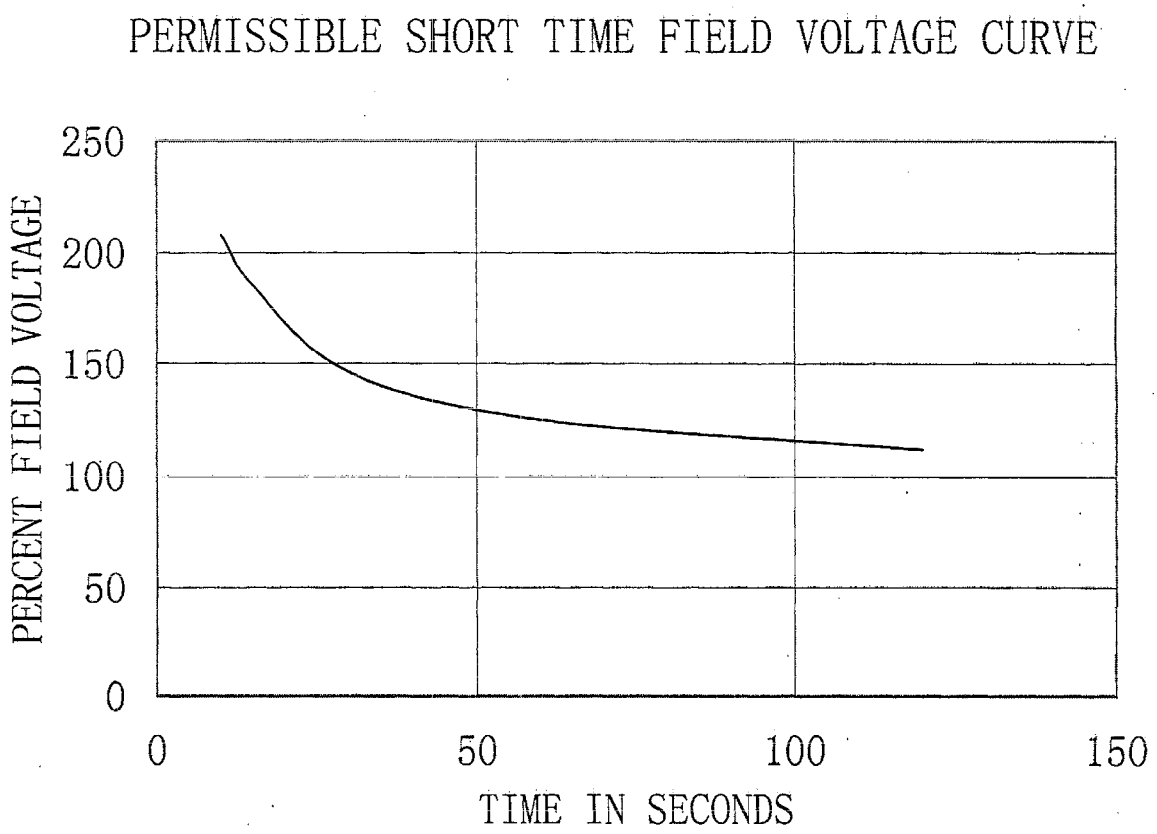

NOTE:Two times per year of operation at the limits are permissible.

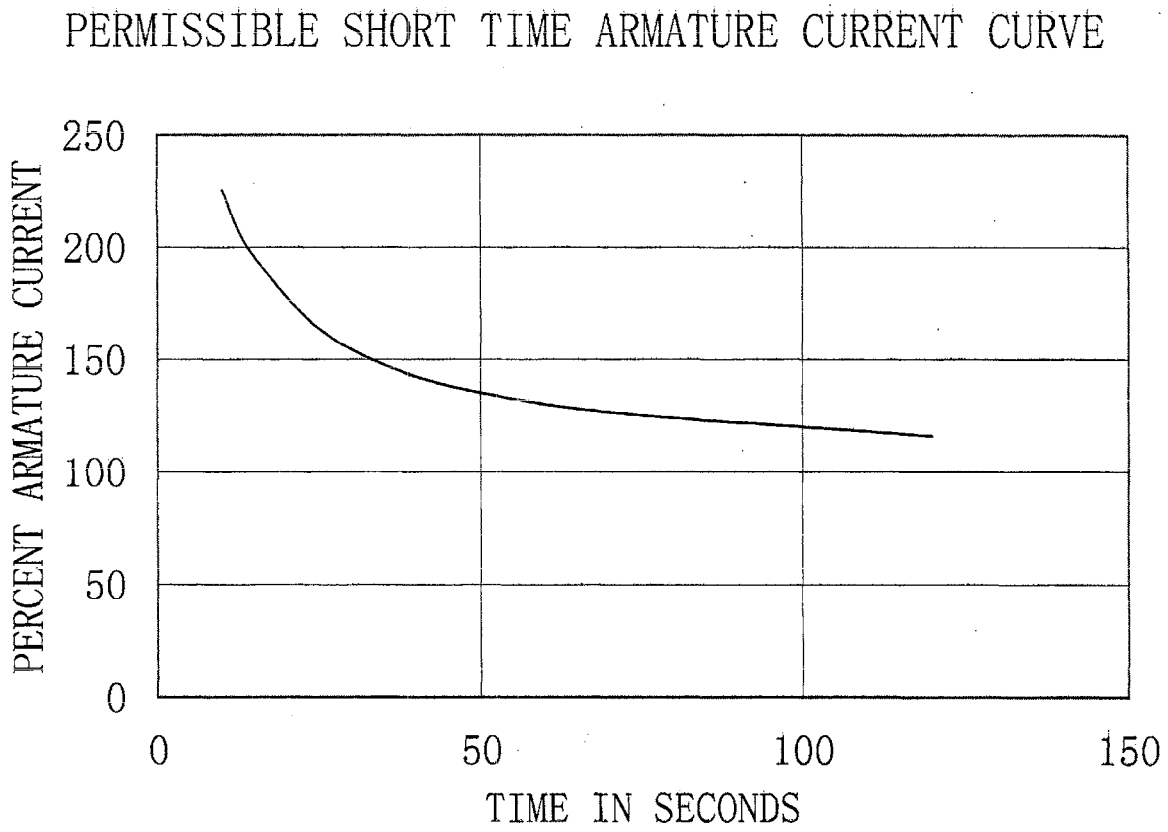

NOTE:Two times per year of operation at the limits are permissible.

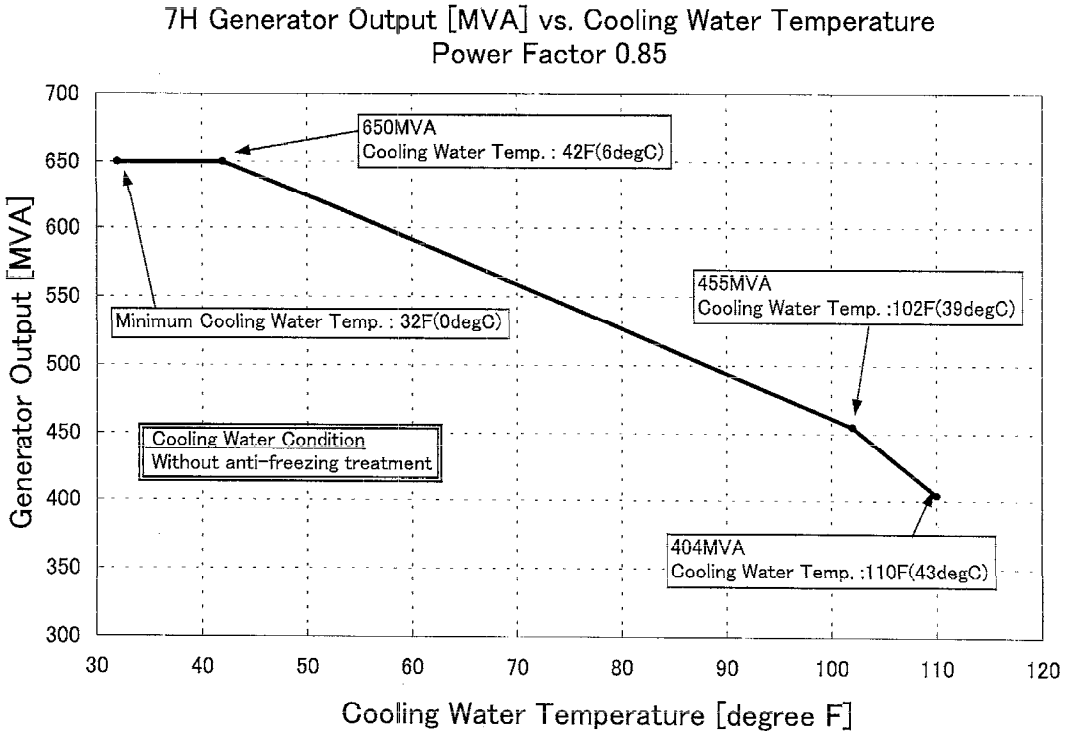
7H Generator Output [MVA] vs. Cooling Water Temperature
Power Factor 0.85
650MVA
Cooling Water Temp. : 42F(6degC)
455MVA
Cooling Water Temp. :102F(39degC)
404MVA
Cooling Water Temp. :110F(43degC)
Minimum Cooling Water Temp. : 32F(0degC)
Cooling Water Condition
Without anti-freezing treatment
Generator Output [MVA]
700
650
600
550
500
450
400
350
300
30
40
50
60
70
80
90
100
110
120
Cooling Water Temperature [degree F]

E:\interconnects\inland empire\7H GEN Data R1 LST-GEN-7HSD-0001.tif

ESTIMATED GENERATOR LOSS CURVES

TAKS-2P-455,000kVA-3600rpm-ICH-19,500V-13,472A-60Hz-0.85PF

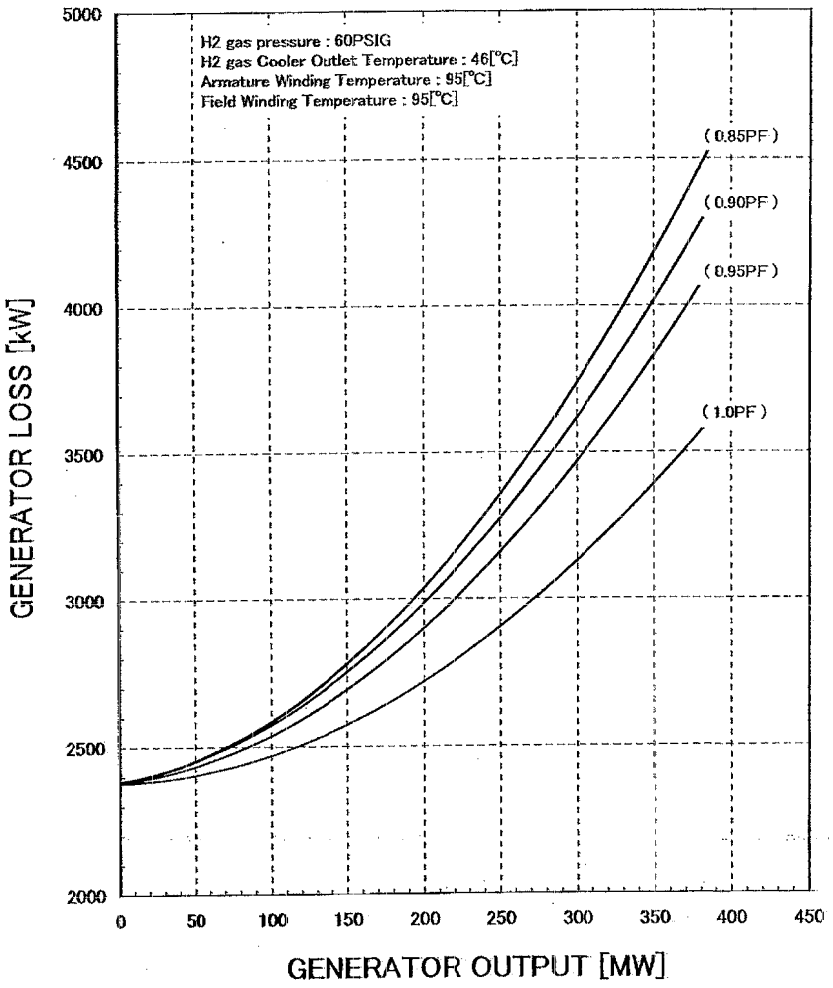

Model Name: exst4b

Description IEEE type ST4b excitation system

Prerequisites: Generator model ahead of this model in dynamic models table

Inputs: Compounded generator terminal voltage, generator field current, generator speed

Invocation: `exst4b [<n>] {<name> <kv>} <id> :`

Parameters:

	EPCL Variable	*Default Data*	*Description*
0.02	Tr	0.02	Filter time constant, sec
3.6	Kpr	3.15	Proportional Gain, pu
3.6	Kir	3.15	Integral Gain, pu
0.02	Ta	0.01	Time constant, sec
1.0	Vrmax	1.0	Maximum control element output, pu
-0.87	Vrmin	-0.87	Minimum control element output, pu
1.0	Kpm	1.0	Prop. Gain of field voltage regulator, pu
0.0	Kim	0.0	Integral Gain of field voltage regulator, pu
1.0	Vmmax	1.0	Maximum field voltage regulator output, pu
-0.87	Vmmin	-0.87	Minimum field voltage regulator output, pu
0.0	Kg	0.00	Excitation limiter gain, pu
5.55	Kp	6.5	Potential source gain, pu
0.0	Angp	0.0	Phase angle of potential source, degree
0.0	Ki	0.0	Current source gain, pu
0.08	Kc	0.08	Exciter regulation factor, pu
0.0	Xl	0.0	P-bar leakage reactance, pu
6.94	Vbmax	8.0	Maximum excitation voltage

Notes:

a) This model represents the GE EX2000 bus fed potential source, static compound and Generrex-PPS or -CPS, and SILCOmatic 5 excitation systems, with proportional plus integral (PI) voltage controller.

b) The inner loop field voltage regulator (Kpm, Kim and Kg) are used for modeling of a compound power source static exciter. Any of these values can be zero. To bypass the inner loop field voltage regulator, set Kpm = 1.0, and Kim and Kg tp zero.

c) Setting Ta or Tr to zero will bypass the time constants.

Output Channels:

Record Level	*Name*	*Description*
1	ifd	Generator field current, pu

Model Name: genrou

Description Solid rotor generator represented by equal mutual inductance rotor modeling

Prerequisites: Generator present in load flow working case

Inputs: Network boundary variables, Field Voltage, Turbine Power

Invocation: `genrou [<n>] {<name> <kv>} <id> :`

Parameters:

	EPCL Variable	*Default Data*	*Description*
6.1	Tpdo	7.0	D-axis transient rotor time constant
0.03	Tppdo	0.030	D-axis sub-transient rotor time constant
1.3	Tpqo	0.75	Q-axis transient rotor time constant
0.05	Tppqo	0.05	Q-axis sub-transient rotor time constant
6.8	H	3.0	Inertia constant, sec
0.0	D	0.0	Damping factor, pu
1.89	Ld	2.1	D-axis synchronous reactance
1.85	Lq	2.0	Q-axis synchronous reactance
0.249	Lpd	0.2	D-axis transient reactance
0.39	Lpq	0.5	Q-axis transient reactance
0.195	Lppd	0.18	D-axis transient reactance
0.165	Ll	0.15	Stator leakage reactance, pu
0.13	S1	0.05	Saturation factor at 1 pu flux
0.34	S12	0.3	Saturation factor at 1.2 pu flux
0.0024	Ra	0.0	Stator resistance, pu
0.0	Rcomp	0.0	Compounding resistance for voltage control, pu
0.0	Xcomp	0.0	Compounding reactance for voltage control, pu

Notes:

a) All rotor time constants must be non-zero.

b) All reactances must be specified. **Lppq** is taken to be equal to **Lppd**.

c) **D** has the dimensions ÷P(p.u.) / ÷speed (p.u.).

d) **S1** and **S12** are defined in Figure 3.10.2, and must be non- zero.

e) (**Ra**+j**Lppd**) overwrites the load flow machine subtransient impedance when the INIT, RDYD, or RDWS command is executed.

f) If **Rcomp** and **Xcomp** are absent from the data record read by RDYD, they are set to zero. If **Ra** is also absent, it is set to the resistance part of the machine subtransient impedance from the load flow data table.

Output Channels:

Record Level	*Name*	*Description*
1	spd	Shaft speed, p.u.
1	ang	Rotor angle, degrees
1	vt	Terminal voltage, p.u.
1	pg	Electrical power, MW
1	qg	Reactive power, MVAR
1	efd	Field voltage, p.u.

Model Name: **ggov1**

Description General governor model

Prerequisites: Generator model ahead of this model in the dynamic models table

Inputs: Shaft speed

Invocation: `ggov1 [<n>] {<name> <kv>} <id> : [mwcap=<value>]`

Parameters:

	EPCL Variable	*Default Data*	*Description*
0.05	r	0.04	Permanent droop, p.u.
1	rselect	1.0	Feedback signal for droop = 1 selected electrical power = 0 none (isochronous governor) = -1 fuel valve stroke (true stroke) = -2 governor output (requested stroke)
1.0	Tpelec	1.0	Electrical power transducer time constant, sec.
0.05	maxerr	0.05	Maximum value for speed error signal
-0.05	minerr	-0.05	Minimum value for speed error signal
10.0	Kpgov	10.0	Governor proportional gain
2.0	Kigov	2.0	Governor integral gain
0.0	Kdgov	0.0	Governor derivative gain
1.0	Tdgov	1.0	Governor derivative controller time constant
1.0	vmax	1.0	Maximum valve position limit
0.15	vmin	0.15	Minimum valve position limit
0.5	Tact	0.5	Actuator time constant
1.5	Kturb	1.5	Turbine gain
0.2	wfnl	0.2	No load fuel flow, p.u
300.0	Tb	0.5	Turbine lag time constant
195.0	Tc	0.0	Turbine lead time constant
1	Flag	1.0	Switch for fuel source characteristic = 0 for fuel flow independent of speed

			= 1 fuel flow proportional to speed
0.0	Teng	0.0	Transport lag time constant for diesel engine
3.0	Tfload	3.0	Load Limiter time constant
2.0	Kpload	2.0	Load limiter proportional gain for PI controller
0.67	Kiload	0.67	Load limiter integral gain for PI controller
1.0	Ldref	1.0	Load limiter reference value p.u.
-2.0	Dm	0.0	Speed sensitivity coefficient, p.u.
0.1	ropen	.10	Maximum valve opening rate, p.u./sec.
-0.1	rclose	-0.1	Minimum valve closing rate, p.u./sec.
0.002	Kimw	0.002	Power controller (reset) gain
15.0	Pmwset	80.0	Power controller setpoint, MW
0.01	aset	0.01	Acceleration limiter setpoint, p.u./sec.
5.0	Ka	10.0	Acceleration limiter Gain
0.1	Ta	0.1	Acceleration limiter time constant, sec.
0.00025	db	0.0	Speed governor dead band
4.0	Tsa	4.0	Temperature detection lead time constant, sec.
5.0	Tsb	5.0	Temperature detection lag time constant, sec.
99.0	rup	99.0	Maximum rate of load limit increase
-99.0	rdown	-99.0	Maximum rate of load limit decrease

Notes:

a) This model can be used to represent a variety of prime movers controlled by PID governors. It is suitable, for example, for representation of

- gas turbine and single shaft combined cycle turbines
- diesel engines with modern electronic or digital governors
- steam turbines where steam is supplied from a large boiler drum or a large header whose pressure is substantially constant over the period under study
- simple hydro turbines in dam configurations where the water column length is short and water inertia effects are minimal

b) Per unit parameters are on base of turbine MW capability. If no value is entered for "**mwcap**", the generator MVA base is used.

c) The range of fuel valve travel and of fuel flow is unity. Thus the largest possible value of **vmax** is 1.0 and the smallest possible value of **vmin** is zero. **Vmax** may, however, be reduced below unity to represent a loading limit that

may be imposed by the operator or a supervisory control system. For gas turbines **vmin** should normally be greater than zero and less than **wfnl** to represent a minimum firing limit.

The value of the fuel flow at maximum output must be less than, or equal to unity, depending on the value of **Kturb**. If the initial power requires a valve position greater than 1.0, a warning message is written and **Kturb** is increased to permit initialization with valve position
= 1.0.

d) The parameter **Teng** is provided for use in representing diesel engines where there is a small but measurable transport delay between a change in fuel flow setting and the development of torque. **Teng** should be zero in all but special cases where this transport delay is of particular concern.

e) The parameter **Flag** is provided to recognize that fuel flow, for a given fuel valve stroke, can be proportional to engine speed. This is the case for GE gas turbines and for diesel engines with positive displacement fuel injectors. **Flag** should be set to unity for all GE gas turbines and most diesel turbines. **Flag** should be set to zero where it is known that the fuel control system keeps fuel flow independent of the engine speed.

f) The load limiter module may be used to impose a maximum output limit such as an exhaust temperature limit. To do this the time constant **Tfload** should be set to represent the time constant in the measurement of temperature (or other signal), and the gains of the limiter, **Kpload, Kiload**, should be set to give prompt stable control when on limit. The load limit can be deactivated by setting the parameter **Ldref** to a high value.

g) The parameter **Dm** can represent either the variation of the engine power with the shaft speed or the variation of maximum power capability with shaft speed.

If **Dm** is positive it describes the falling slope of the engine speed verses power characteristic as speed increases. A slightly falling characteristic is typical for reciprocating engines and some aero-derivative turbines.

If **Dm** is negative the engine power is assumed to be unaffected by the shaft speed, but the maximum permissible fuel flow is taken to fall with falling shaft

speed. This is characteristic of single-shaft industrial turbines due to exhaust temperature limits.

h) This model includes a simple representation of a supervisory load controller. This controller is active if the parameter **Kimw** is non-zero. The load controller is a slow acting reset loop that adjusts the speed/load reference of the turbine governor to hold the electrical power output of the unit at its initial condition value. This value is stored in the parameter **Pmwset** when the model is initialized, and can be changed thereafter. The load controller must be adjusted to respond gently relative to the speed governor. A typical value for **Kimw** is 0.01, corresponding to a reset time of 100 seconds.

i) The load reference of the supervisory load control loop is accessible as the parameter, **Pmwset**. **Pmwset** is given a value automatically when the model is initialized. This value overwrites any value entered prior to initialization. This parameter should not be manipulated by the manual operation or an EPCL program prior to the execution of the "INIT' command.

j) The parameters **aset, Ka**, and **Ta** describe an acceleration limiter. Ta must be non-zero, but the acceleration limiter can be disabled by setting **Ka** to 0.

l) The parameter, **db**, is the speed governor dead band. This parameter is stated in terms of per unit speed. In the majority of applications of **ggov1** it is recommended that this value be set to zero.

m) The parameters, **Tsa, Tsb**, are provided to augment the exhaust gas temperature measurement subsystem in gas turbines. For example, they may be set to values such as 4., 5., to represent the 'radiation shield' element of large gas turbines. If both parameters are left off the end of the parameter list, they default to 1.0.

n) The parameters, **rup, rdown,** specify the maximum rate of increase and decrease of the output of the load limit controller **(Kpload/Kiload**). These parameters should normally be set, or defaulted to 99/-99, but may be given particular values to represent the temperature limit controls of some GE heavy-duty engine controls. If both parameters are left off the end of the parameter list, they default to 99 and –99.

Output Channels:

Record Level	***Name***	***Description***
1	pm	Turbine power, MW
1	fsr	Governor fuel valve command, p.u.
1	fsrt	Temperature limit fuel valve command, p.u.

Model Name: pss2a

Description Dual input Power system stabilizer (IEEE type PSS2A)

Prerequisites: Generator model ahead of this model in dynamic models table

Inputs: Generator shaft speed Frequency of generator terminal or system bus voltage
Generator electric power or accelerating power
Voltage amplitude of generator terminal bus or system bus
Current amplitude specified branch

Invocation: `psssa [<n>] {<name> <kv>} <id> :`

Parameters:

EPCL Default Variable	*Data*	*Description*	
1	J1	1.0	Input signal #1 code
0	K1	0.0	Input signal #1 remote bus number
3	J2	3.0	Input signal #2 code
0	K2	0.0	Input signal #2 remote bus number
2.0	Tw1	2.0	First washout on signal #1, sec.
2.0	Tw2	2.0	Second washout on signal #1, sec.
2.0	Tw3	2.0	First washout on signal #2, sec.
0.0	Tw4	0.0	Second washout on signal #2, sec.
0.0	T6	0.0	Time constant on signal #1, sec.
2.0	T7	2.0	Time constant on signal #2, sec.
0.147	Ks2	0.2	Gain on signal #2
1.0	Ks3	1.0	Gain on signal #2
1.0	Ks4	1.0	Gain on signal #2
0.5	T8	0.5	Lead of ramp tracking filter
0.1	T9	0.1	Lag of ramp tracking filter
1	n	1.0	Order of ramp tracking filter

5	m	5.0	Order of ramp tracking filter
8.0	Ks1	10.0	Stabilizer gain
0.25	T1	0.25	Lead/lag time constant, sec.
0.03	T2	0.04	Lead/lag time constant, sec.
0.15	T3	0.2	Lead/lag time constant, sec.
0.015	T4	0.03	Lead/lag time constant, sec.
0.1	Vstmax	0.1	Stabilizer output max limit, p.u.
-0.1	Vstmin	-0.1	Stabilizer output min limit, p.u.
1.0	a	1.	Lead/lag num. Gain. (not in IEEE model)
0.0	Ta	0.	Lead/lag time constant, sec. (not in IEEE model)
0.0	Tb	0.	Lead/lag time constant, sec. (not in IEEE model)

Notes:

a) TW1 and TW3 must be greater than zero.

b) Setting TW2 or TW4 to zero will bypass the washout function.

c) Ta, Tb, a, T1, T2, T3, T4, T6, T7, T8, and T9 may be zero.

d) Set T9 = 0 or n = 0 to get a null effect from the ramp tracking filter.

e) The product of n*m cannot be greater than 10.

f) The input signal code, j, and the remote bus number, k, specify the input signal used by the stabilizer. If k is zero the signal is taken from the shaft or terminals of the generator on which the stabilizer is located. If k is non-zero the signal is taken from bus number k (for j = 1, 2, 3, 4, or 5 .

g) To use branch current as an input, the branch is specified using the ([<mon_i>] {<name> <kv>} [<mon_j>] {<name> <kv>} <ck> <sec>) data in the DYD file or in the "edds" table. Note that only one branch current may be used as input to this model.

The input signal code, j, is

1	for shaft speed
2	for frequency of bus voltage
3	for generator electrical power

4	for generator accelerating power
5	for amplitude of bus voltage
6	or amplitude of branch current

Output Channels:

Record Level	*Name*	*Description*
1	vs	Stabilizer output signal, p.u.

Completeness Letter

CALIFORNIA ISO

California Independent
System Operator

January 10, 2005

Mr. Alan Roth
Sr. Electrical Engineer
Calpine Corporation
4160 Dublin Blvd.
Dublin, CA 94568-3139

Subject: Inland Empire Energy Center
Generator Interconnection Application - Complete

Dear Mr. Roth:

The California ISO (Cal-ISO) and Southern California Edison (SCE), acting as the interconnecting Participating Transmission Owner (PTO), have reviewed the Generator Interconnection Application (Application) submitted by Calpine Corporation (Calpine) for the interconnection of the Inland Empire Energy Center located in Romoland, California. Calpine plans to interconnect at the SCE Valley Substation.

The Application and Good Faith Deposit were received by the Cal-ISO on December 21, 2004 and December 10, 2004, respectively. After review of all application data that was received within the 10-business day (BD) Application review period, the Cal-ISO and SCE agree that the Application is now complete. The effective date for the queue position of the Project is December 21, 2004.

The Cal-ISO and PG&E agree that a System Impact Study (SIS) will be required to determine the impact that the Inland Empire Energy Center will have on SCE's transmission system and the Cal-ISO controlled grid.

Should you have any questions concerning the review of the Application, please contact Judy Nickel at (916) 608-7062 (jnickel@caiso.com) or Johann Galleberg at (916) 351-2313 (jgalleberg@caiso.com).

Sincerely,

Original signed by Judy Nickel

Judy Nickel
New Resource Interconnections

cc:

Robert Lugo
Manager, Grid Contracts/Tariff Negotiation/Development
Southern California Edison
P.O. Box 800
2244 Walnut Grove Ave.
Rosemead, CA 91770

Patricia Arons (SCE via e-mail)
Dana Cabbell (SCE via e-mail)
Teri Kondo (SCE via e-mail)
Jorge Chacon (SCE via e-mail)
Lawren Minor (SCE via e-mail)

Mike Hatfield (mhatfield@calpine.com)

Armando Perez (ISO)
Rich Cashdollar (ISO)

Judy Nickel (ISO via e-mail)
Tom French (ISO via e-mail)
Johann Galleberg (ISO via e-mail)
Ty Larson (ISO via e-mail)
ISO Grid Planning (via e-mail)

Appendix 3.1 Air Quality

3.1-1 Detailed Emissions Calculations

3.1-2 Air Emissions Modeling Inputs

3.1-3 Class I Impacts Modeling Analysis

3.1-4 Detailed Gas Turbine PM_{10} Emission Information

3.1-1 Detailed Emissions Calculations

APPENDIX A.1

DETAILED EMISSION CALCULATIONS

Table A.1-1
Gas Turbines Detailed Hourly Emission Calculations

Standard Conditions: 60 F 30 in. Hg
Reference O2: 15.00%

Operating Cases	1) Hot Base	2) Hot Low	3) Avg. Base	4) Avg. Low	5) Cold Base	6) Cold Low
Ambient Temperature (F)	98	98	63	63	36	36
Ambient Humidity (%)	27.00%	27.00%	52.30%	52.30%	66.10%	66.10%
Load	100%	50%	100%	50%	100%	50%
Fuel Moisture (lbs/hr)	17,623	8,423	18,328	9,255	19,098	10,102
Turbine Fuel Flow Rates						
scfm	39,670	18,979	41,122	21,702	42,670	23,606
lbs/hr	105,880	50,655	109,755	57,923	113,888	63,005
MMBtu/hr (HHV)	2,414.9	1,155.4	2,503.3	1,321.1	2,597.6	1,437.0
MMBtu/hr (LHV)	2,178.0	1,042.0	2,257.7	1,191.5	2,342.7	1,296.0
Exhaust Gas Parameters						
Exhaust Flow Rate (wacfm)	1,314,943	663,233	1,346,804	706,856	1,360,935	759,243
Exhaust Flow Rate (dscfm)	923,094	488,578	961,096	528,096	1,000,305	575,248
Exhaust Flow Rate (lbs/hr)	4,558,156	2,397,151	4,723,340	2,588,130	4,898,810	2,809,622
Stack Temperature (F)	171.2	146.4	165.5	139.6	150.6	134.4
H2O, vol %, wet basis	9.99%	9.26%	9.33%	9.01%	8.84%	8.52%
H2O, mass %, wet basis	6.40%	5.92%	5.96%	5.75%	5.63%	5.43%
Diluent Concentrations						
O2 (%), dry basis	13.19%	13.94%	13.22%	13.53%	13.25%	13.54%
CO2 (%), dry basis	4.43%	4.00%	4.41%	4.23%	4.39%	4.23%
Reference O2 (%), dry basis	15.00%	15.00%	15.00%	15.00%	15.00%	15.00%
Pollutant Concentrations at Actual O2						
VOC as CH4, ppmvd	2.61	2.36	2.60	2.49	2.59	2.49
CO, ppmvd	3.91	3.54	3.90	3.74	3.88	3.74
NOx, ppmvd	2.61	2.36	2.60	2.49	2.59	2.49
SOx, ppmvd	0.18	0.16	0.18	0.17	0.18	0.17
NH3, ppmvd	6.52	5.89	6.49	6.24	6.47	6.23
PM10 (gr/dscf)	0.0013	0.0024	0.0012	0.0022	0.0012	0.0020
Pollutant Concentrations at Ref. O2						
VOC as CH4, ppmvd	2.0	2.0	2.0	2.0	2.0	2.0
CO, ppmvd	3.0	3.0	3.0	3.0	3.0	3.0
NOx, ppmvd	2.0	2.0	2.0	2.0	2.0	2.0
SOx, ppmvd	0.1396	0.1396	0.1396	0.1396	0.1396	0.1396
NH3, ppmvd	5.0	5.0	5.0	5.0	5.0	5.0
Emission Rates (lbs/MMBtu)						
VOC as CH4	0.0025	0.0025	0.0025	0.0025	0.0025	0.0025
CO	0.0066	0.0066	0.0066	0.0066	0.0066	0.0066
NOx	0.0072	0.0072	0.0072	0.0072	0.0072	0.0072
SOx	0.0007	0.0007	0.0007	0.0007	0.0007	0.0007
NH3	0.0067	0.0067	0.0067	0.0067	0.0067	0.0067
PM10	0.0041	0.0087	0.0040	0.0076	0.0038	0.0070
Emission Rates (lbs/hour)						
VOC as CH4	6.10	2.92	6.33	3.34	6.57	3.63
CO	15.99	7.65	16.57	8.75	17.19	9.51
NOx	17.50	8.37	18.14	9.58	18.83	10.42
SOx	1.70	0.81	1.76	0.93	1.83	1.01
NH3	16.20	7.75	16.79	8.86	17.42	9.64
PM10	10.00	10.00	10.00	10.00	10.00	10.00

Table A.1-2
Detailed Calculations for Maximum Hourly, Daily, and Annual Criteria Pollutant Emissions

	Base Load			Startup			NOx			SOx		CO		VOC		PM10	
Equipment	max. hour	hrs/day	hrs/yr	max. hour	hrs/day	hrs/yr	Base Load lb/hr	Startup* lb/hr	Startup** lb/hr	Base Load lb/hr	Startup lb/hr	Base Load lb/hr	Startup lb/hr	Base Load lb/hr	Startup lb/hr	Base Load lb/hr	Startup lb/hr
Gas Turbine 1, baseload hot	0	0	0	0	0	0	17.50	0.00	0.00	1.70	0.00	15.99	0.00	6.10	0.00	10.00	0.00
Gas Turbine 2, baseload hot	0	0	0	0	0	0	17.50	0.00	0.00	1.70	0.00	15.99	0.00	6.10	0.00	10.00	0.00
Gas Turbine 1, baseload avg.	0	0	0	0	0	0	18.14	0.00	0.00	1.76	0.00	16.57	0.00	6.33	0.00	10.00	0.00
Gas Turbine 2, baseload avg.	0	0	0	0	0	0	18.14	0.00	0.00	1.76	0.00	16.57	0.00	6.33	0.00	10.00	0.00
Gas Turbine 1, baseload cold	0	18	8360	0	0	0	18.83	0.00	0.00	1.83	0.00	17.19	0.00	6.57	0.00	10.00	0.00
Gas Turbine 2, baseload cold	0	18	8360	0	0	0	18.83	0.00	0.00	1.83	0.00	17.19	0.00	6.57	0.00	10.00	0.00
Gas Turbine 1, startups	0	0	0	1	6	400	0.00	408.00	275.00	0.00	1.83	0.00	95.00	0.00	16.00	0.00	10.00
Gas Turbine 2, startups	0	0	0	1	6	400	0.00	408.00	275.00	0.00	1.83	0.00	95.00	0.00	16.00	0.00	10.00
Auxiliary Boiler	1	24	2340	0	0	0	1.32	0.00	0.00	0.11	0.00	5.73	0.00	0.66	0.00	1.12	0.00
Standby Generator Engine 1	1	6	50	0	0	0	41.75	0.00	0.00	0.99	0.00	6.34	0.00	0.88	0.00	0.15	0.00
Standby Generator Engine 2	0	0	50	0	0	0	41.75	0.00	0.00	0.99	0.00	6.34	0.00	0.88	0.00	0.15	0.00
Emergency Firepump Engine	0	0	50	0	0	0	3.44	0.00	0.00	0.10	0.00	0.18	0.00	0.10	0.00	0.06	0.00
Cooling Tower 1	1	24	8760	0	0	0	0.00	0.00	0.00	0.00	0.00	0.00	0.00	0.00	0.00	1.75	0.00
Cooling Tower 2	1	24	8760	0	0	0	0.00	0.00	0.00	0.00	0.00	0.00	0.00	0.00	0.00	1.75	0.00

Notes:
* NOx emission level when a single gas turbine is in startup.
** NOx emission level when both gas turbines are in startup (based on a combined NOx level of 550 lbs/hr for both units).

Table A.1-3
Detailed Calculations for Maximum Hourly, Daily, and Annual Criteria Pollutant Emissions

	NOx			SOx			CO			VOC			PM10		
Equipment	Max lb/hr	Max lb/day	Total tpy	Max lb/hr	Max lb/day	Total tpy	Max lb/hr	Max lb/day	Total tpy	Max lb/hr	Max lb/day	Total tpy	Max lb/hr	Max lb/day	Total tpy
Gas Turbine 1, baseload hot	0.00	0.00	0.00	0.00	0.00	0.00	0.00	0.00	0.00	0.00	0.00	0.00	0.00	0.00	0.00
Gas Turbine 2, baseload hot	0.00	0.00	0.00	0.00	0.00	0.00	0.00	0.00	0.00	0.00	0.00	0.00	0.00	0.00	0.00
Gas Turbine 1, baseload avg.	0.00	0.00	0.00	0.00	0.00	0.00	0.00	0.00	0.00	0.00	0.00	0.00	0.00	0.00	0.00
Gas Turbine 2, baseload avg.	0.00	0.00	0.00	0.00	0.00	0.00	0.00	0.00	0.00	0.00	0.00	0.00	0.00	0.00	0.00
Gas Turbine 1, baseload cold	0.00	338.89	78.70	0.00	32.95	7.65	0.00	309.50	71.87	0.00	118.18	27.44	0.00	180.00	41.80
Gas Turbine 2, baseload cold	0.00	338.89	78.70	0.00	32.95	7.65	0.00	309.50	71.87	0.00	118.18	27.44	0.00	180.00	41.80
Gas Turbine 1, startups	275.00	803.00	26.77	1.83	10.98	0.37	95.00	300.00	19.00	16.00	48.00	3.20	10.00	60.00	2.00
Gas Turbine 2, startups	275.00	803.00	26.77	1.83	10.98	0.37	95.00	300.00	19.00	16.00	48.00	3.20	10.00	60.00	2.00
Auxiliary Boiler	1.32	31.61	1.54	0.11	2.65	0.13	5.73	137.47	6.70	0.66	15.75	0.77	1.12	26.88	1.31
Standby Generator Engine 1	41.75	250.47	1.04	0.99	5.93	0.02	6.34	38.04	0.16	0.88	5.27	0.02	0.15	0.88	0.00
Standby Generator Engine 2	0.00	0.00	1.04	0.00	0.00	0.02	0.00	0.00	0.16	0.00	0.00	0.02	0.00	0.00	0.00
Emergency Firepump Engine	0.00	0.00	0.09	0.00	0.00	0.00	0.00	0.00	0.00	0.00	0.00	0.00	0.00	0.00	0.00
Cooling Tower 1	0.00	0.00	0.00	0.00	0.00	0.00	0.00	0.00	0.00	0.00	0.00	0.00	1.75	41.99	7.66
Cooling Tower 2	0.00	0.00	0.00	0.00	0.00	0.00	0.00	0.00	0.00	0.00	0.00	0.00	1.75	41.99	7.66
Total	593.06 lb/hr	2565.87 lb/day	214.65 tpy	4.76 lb/hr	96.44 lb/day	16.22 tpy	202.07 lb/hr	1394.52 lb/day	188.77 tpy	33.53 lb/hr	353.38 lb/day	62.10 tpy	24.77 lb/hr	591.75 lb/day	104.25 tpy

Table A.1-4
Auxiliary Boiler

Rating (MMBtu/hr) =	156.6
Fuel =	Natural Gas
Exhaust Temperature (F) =	289
Stack Diameter (ft) =	4
Exhaust Flow Rate (acfm) =	47,616.67
Exhaust Velocity (ft/sec) =	63.15

	NOx	CO	VOC	SOx	PM10	NH3
Exhaust Concentration (ppm @ 3% O2) =	7	50	10			5
Hourly Emissions (lbs/hr) =	1.32	5.73	0.66	0.11	1.12	0.35

Table A.1-5
Standby/Emergency Engines

Standby Generator Engines					
Rating (bhp) =	2,848				
Fuel =	Diesel				
Fuel Consumption (gal/hr) =	144.0				
Exhaust Temperature (F) =	978.3				
Exhaust Diameter (inches) =	20				
Exhaust Flow Rate (acfm) =	16,616				
Exhaust Velocity (ft/sec) =	127				
	NOx	CO	VOC	SOx	PM10
Emission Factor (g/bhp-hr) =	6.65	1.01	0.14	0.16	0.02
Hourly Emissions per Engine (lbs/hr) =	41.75	6.34	0.88	0.99	0.15

Emergency Firepump Engine					
Rating (bhp) =	300				
Fuel =	Diesel				
Fuel Consumption (gal/hr) =	14.5				
Exhaust Temperature (F) =	738				
Exhaust Diameter (inches) =	6				
Exhaust Flow Rate (acfm) =	2,058				
Exhaust Velocity (ft/sec) =	175				
	NOx	CO	VOC	SOx	PM10
Emission Factor (g/bhp-hr) =	5.20	0.27	0.15	0.15	0.09
Hourly Emissions (lbs/hr) =	3.44	0.18	0.10	0.10	0.06

Table A.1-6

Calculation of Cooling Tower Emissions

Number of towers	2
Number of cells per tower	8
Fan stack diameter (ft)	32
Exhaust temperature (F)	73.29
Exhaust flow rate per cell (acfm)	1,618,000
Water Circulation Rate, gal/min	89,597
Drift Rate	0.0005%
Water Drift (lbs/hr)	223.90
TDS Level, mg/L	7800
PM10 lb/hr per tower	1.75
PM10 emissions per cell, lb/hr	0.219
PM10 emissions per cell, g/s	0.028

Table A.1-7
Calculation of NOx RECLAIM Trading Credits During Normal Year

Number of hot starts per year =	0
Duration of hot start (hrs/start) =	1
Hours of hot start per year (hrs/year) =	0
Number of cold starts per year =	0
Duration of cold start (hrs/start) =	6
Hours of cold start per year (hrs/year)=	0
Duration gas turbine offline prior to hot start (hrs) =	2
Hours gas turbine offline per year due to hot starts (hrs/year) =	0
Duration gas turbine offline prior to cold start (hrs) =	72
Hours gas turbine offline per year due to cold starts (hrs/year) =	0
Hours gas turbine baseline operation per year (hrs/year) =	8760
Gas turbine baseline operating case =	Annual Avg. Temp.
Gas turbine baseline NOx concentration (ppmvd @ 15% 02) =	2
NOx emission rate during baseline operation (lbs/hr) =	18.1
NOx emission rate during starts (lbs/hr) =	125
Auxiliary boiler operation per year (hrs/year) =	600
Auxiliary boiler NOx emission rate (lbs/hr) =	1.32
Standby generator engine operation per year (hrs/year) =	50
Standby generator engine NOx emission rate (lbs/hr) =	41.7
Emergency firepump engine operation per year (hrs/year) =	50
Emergency firepump engine NOx emission rate (lbs/hr) =	3.4
Annual NOx emissions hot starts per turbine (lbs/yr) =	0
Annual NOx emissions cold starts per turbine (lbs/yr) =	0
Annual NOx emissions baseline operation per turbine (lbs/yr) =	158,943
Total NOx emissions per turbine (lbs/yr) =	158,943
Total NOx emissions both turbines (lbs/yr) =	317,887
NOx emissions for auxiliary boiler (lbs/yr) =	790
NOx emissions for both standby generator engines (lbs/yr) =	4,175
NOx emissions for emergency firepump engine (lbs/yr) =	172
Total NOx RTC requirement for facility (lbs/yr) =	**323,023**

Table A.1-8
Calculation of NOx RECLAIM Trading Credits During 1st Year

Commissioning period for gas turbine #1 (days) =	110
Commissioning period for gas turbine #2 (days) =	57
Stager in commissioning periods (days) =	30
Normal operating period after commissioning for gas turbine #1 (days) =	255
Normal operating period after commissioning for gas turbine #1 (hours) =	6120
Normal operating period after commissioning for gas turbine #2 (days) =	278
Normal operating period after commissioning for gas turbine #2 (hours) =	6672
Hourly NOx emissions during normal operation per gas turbine (lbs/hr) =	18.1
NOx emissions during commissioning period for gas turbine #1 (lbs) =	54,569
NOx emissions during commissioning period for gas turbine #2 (lbs) =	31,160
NOx emissions during normal operating period following commissioning for gas turbine #1 (lbs) =	111,043
NOx emissions during normal operating period following commissioning for gas turbine #2 (lbs) =	121,058
Total NOx emissions for gas turbine #1 (lbs) =	165,612
Total NOx emissions for gas turbine #2 (lbs) =	152,218
Auxiliary boiler operation per year (hrs/year) =	600
Auxiliary boiler NOx emission rate (lbs/hr) =	1.32
Auxiliary boiler NOx emissions (lbs) =	790
Standby generator engine operation per year (hrs/year) =	50
Standby generator engine NOx emission rate (lbs/hr) =	41.75
Both standby generators NOx emissions (lbs) =	4,175
Emergency firepump engine operation per year (hrs/year) =	50
Emergency firepump engine NOx emission rate (lbs/hr) =	3.44
Emergency firepump NOx emissions (lbs) =	172
Total NOx RTC requirement for facility (lbs/yr) =	**322,967**

Table A.1-9
Calculation of Emission Offset Credits

Gas Turbine Operating Mode	Hours(1) Per Month	Hourly Emissions CO Emissions (lbs/hr)	VOC Emissions (lbs/hr)	SOx Emissions (lbs/hr)	PM10 Emissions (lbs/hr)	Monthly Emissions CO Emissions (lbs/month)	VOC Emissions (lbs/month)	SOx Emissions (lbs/month)	PM10 Emissions (lbs/month)
Gas Turbine 1, 36F, 100%	713	11.46	4.60	1.83	10.00	8,173	3,277	1,305	7,130
Gas Turbine 2, 36F, 100%	713	11.46	4.60	1.83	10.00	8,173	3,277	1,305	7,130
Gas Turbine 1, Startups	31	50.00	16.00	1.83	10.00	1,550	496	57	310
Gas Turbine 2, Startups	31	50.00	16.00	1.83	10.00	1,550	496	57	310
Auxiliary Boiler	195	5.73	0.66	0.11	1.12	1,117	128	22	218
Subtotal (Gas Turbine 1) =						9,723	3,773	1,362	7,440
Subtotal (Gas Turbine 2) =						9,723	3,773	1,362	7,440
Subtotal (Auxiliary Boiler) =						1,117	128	22	218
Total =						20,563	7,674	2,745	15,098
Average Daily Emissions (lbs/day)(2)									
Gas Turbine 1 =						324	126	45	248
Gas Turbine 2 =						324	126	45	248
Auxiliary Boiler =						37	4	1	7
Total =						685	256	92	503
Offset Ratio(3) =						1.2	1.2	1.0	1.0
ERCs Required (lbs/day)									
Gas Turbine 1 =						389	151	45	248
Gas Turbine 2 =						389	151	45	248
Auxiliary Boiler =						45	5	1	7
Total =						823	307	92	503

Notes:
1. For gas turbines, based on 1 hr per day of startup, 23 hrs per day of 100% load, and 31 days of operation per month.
2. Based on SCAQMD NSR rule requirement to calculate average daily emission based on 30 days per month.
3. Based on SCAQMD NSR rule offset ratio.

3.1-2 Air Emissions Modeling Inputs

APPENDIX A.2

DETAILED AIR QUALITY MODELING INPUTS

Table A.2-1

Screening Modeling Inputs

Data For Each Turbine

Case	Amb Temp deg F	Stack height feet	Stack Height meters	Stack Diam feet	Stack Diam meters	Stack flow wacfm	Stack flow m3/sec	Stack Vel ft/sec	Stack Vel m/sec	Stack Temp deg F	Stack Temp deg K
1. Hot Base	98	195.0	59.44	22.0	6.71	1,314,943	620.67	57.65	17.57	171.2	350.48
2. Hot Low	98	195.0	59.44	22.0	6.71	663,233	313.05	29.08	8.86	146.4	336.71
3. Avg. Base	63	195.0	59.44	22.0	6.71	1,346,804	635.70	59.05	18.00	165.5	347.32
4. Avg. Low	63	195.0	59.44	22.0	6.71	706,856	333.64	30.99	9.45	139.6	332.93
5. Cold Base	36	195.0	59.44	22.0	6.71	1,360,935	642.37	59.67	18.19	150.6	339.04
6. Cold Low	36	195.0	59.44	22.0	6.71	759,243	358.37	33.29	10.15	134.4	330.04

	NOx lb/hr	CO lb/hr	PM10 lb/hr	SOx lb/hr	NOx g/sec	CO g/sec	PM10 g/sec	SOx g/sec
1. Hot Base	17.50	15.99	10.00	1.70	2.205	2.014	1.260	0.214
2. Hot Low	8.37	7.65	10.00	0.81	1.055	0.964	1.260	0.103
3. Avg. Base	18.14	16.57	10.00	1.76	2.286	2.088	1.260	0.222
4. Avg. Low	9.58	8.75	10.00	0.93	1.207	1.102	1.260	0.117
5. Cold Base	18.83	17.19	10.00	1.83	2.372	2.167	1.260	0.231
6. Cold Low	10.42	9.51	10.00	1.01	1.312	1.199	1.260	0.128

Table A.2-2
Screening Level Modeling Impacts
(Combined Impacts for Two Gas Turbines)

Operating Mode	Conc. (ug/m3) NO2 1-hr	Conc. (ug/m3) CO 1-hr	Conc. (ug/m3) SO2 1-hr	Conc. (ug/m3) SO2 3-hr	Conc. (ug/m3) CO 8-hr	Conc. (ug/m3) PM10 24-hr	Conc. (ug/m3) SO2 24-hr	Conc. (ug/m3) NO2 Annual	Conc. (ug/m3) PM10 Annual	Conc. (ug/m3) SO2 Annual
1. Hot Base	26.79	24.46	2.60	2.43	14.41	4.71	0.80	1.31	0.75	0.13
2. Hot Low	16.84	15.38	1.64	1.54	9.01	6.29	0.51	0.77	0.92	0.07
3. Avg. Base	28.28	25.83	2.75	2.53	15.13	4.75	0.84	1.37	0.76	0.13
4. Avg. Low	19.39	17.71	1.89	1.77	10.32	6.30	0.59	0.88	0.92	0.09
5. Cold Base	31.83	29.07	3.09	2.75	16.79	4.94	0.90	1.47	0.78	0.14
6. Cold Low	21.31	19.46	2.07	1.92	11.21	6.29	0.64	0.95	0.91	0.09

Table A.2-3
Emission Rates and Stack Parameters for Refined Modeling

					Emission Rates, g/s								Emission Rates, lb/hr			
	Stack Diam, m	Temp, deg K	Exhaust Flow, m3/s	Exhaust Velocity, m/s	NOx	SO2	CO	PM10	Stack Diam, ft	Exh Temp, Deg F	Exh Flow Rate, ft3/m	Exhaust Velocity, ft/s	NOx	SO2	CO	PM10
Averaging Period: One hour NOx																
Gas Turbine 1	6.7	339	642.3	18.2	2.3723	n/a	n/a	n/a	22	151	1,360,935	60	18.83	n/a	n/a	n/a
Gas Turbine 2	6.7	339	642.3	18.2	2.3723	n/a	n/a	n/a	22	151	1,360,935	60	18.83	n/a	n/a	n/a
Auxiliary Boiler	1.2	416	22.5	19.2	0.1659	n/a	n/a	n/a	4	289	47,617	63	1.32	n/a	n/a	n/a
Standby Generator 1	0.5	799	7.8	38.7	5.2600	n/a	n/a	n/a	1.7	978	16,616	127	41.75	n/a	n/a	n/a
Standby Generator 2	0.5	799	7.8	38.7	n/a	n/a	n/a	n/a	1.7	978	16,616	127	n/a	n/a	n/a	n/a
Emergency Firepump	0.2	665	1.0	53.2	n/a	n/a	n/a	n/a	0.5	738	2,058	175	n/a	n/a	n/a	n/a
Cooling Tower 1	n/a	n/a	n/a	n/a	n/a	n/a	n/a	n/a	n/a	n/a	n/a	n/a	n/a	n/a	n/a	n/a
Cooling Tower 2	n/a	n/a	n/a	n/a	n/a	n/a	n/a	n/a	n/a	n/a	n/a	n/a	n/a	n/a	n/a	n/a
Averaging Period: One hour CO and SOx																
Gas Turbine 1	6.7	339	642.3	18.2	n/a	0.2306	2.1665	n/a	22	151	1,360,935	60	n/a	1.83	17.19	n/a
Gas Turbine 2	6.7	339	642.3	18.2	n/a	0.2306	2.1665	n/a	22	151	1,360,935	60	n/a	1.83	17.19	n/a
Auxiliary Boiler	1.2	416	22.5	19.2	n/a	0.0139	0.7217	n/a	4	289	47,617	63	n/a	0.11	5.73	n/a
Standby Generator 1	0.5	799	7.8	38.7	n/a	0.1246	0.7989	n/a	1.7	978	16,616	127	n/a	0.99	6.34	n/a
Standby Generator 2	0.5	799	7.8	38.7	n/a	n/a	n/a	n/a	1.7	978	16,616	127	n/a	n/a	n/a	n/a
Emergency Firepump	0.2	665	1.0	53.2	n/a	n/a	n/a	n/a	0.5	738	2,058	175	n/a	n/a	n/a	n/a
Cooling Tower 1	n/a	n/a	n/a	n/a	n/a	n/a	n/a	n/a	n/a	n/a	n/a	n/a	n/a	n/a	n/a	n/a
Cooling Tower 2	n/a	n/a	n/a	n/a	n/a	n/a	n/a	n/a	n/a	n/a	n/a	n/a	n/a	n/a	n/a	n/a
Averaging Period: Three hours SOx																
Gas Turbine 1	6.7	339	642.3	18.2	n/a	0.2306	n/a	n/a	22	151	1,360,935	60	n/a	1.83	n/a	n/a
Gas Turbine 2	6.7	339	642.3	18.2	n/a	0.2306	n/a	n/a	22	151	1,360,935	60	n/a	1.83	n/a	n/a
Auxiliary Boiler	1.2	416	22.5	19.2	n/a	0.0139	n/a	n/a	4	289	47,617	63	n/a	0.11	n/a	n/a
Standby Generator 1	0.5	799	7.8	38.7	n/a	0.1246	n/a	n/a	1.7	978	16,616	127	n/a	0.99	n/a	n/a
Standby Generator 2	0.5	799	7.8	38.7	n/a	n/a	n/a	n/a	1.7	978	16,616	127	n/a	n/a	n/a	n/a
Emergency Firepump	0.2	665	1.0	53.2	n/a	n/a	n/a	n/a	0.5	738	2,058	175	n/a	n/a	n/a	n/a
Cooling Tower 1	n/a	n/a	n/a	n/a	n/a	n/a	n/a	n/a	n/a	n/a	n/a	n/a	n/a	n/a	n/a	n/a
Cooling Tower 2	n/a	n/a	n/a	n/a	n/a	n/a	n/a	n/a	n/a	n/a	n/a	n/a	n/a	n/a	n/a	n/a

Table A.2-3
Emission Rates and Stack Parameters for Refined Modeling (cont.)

	Stack Diam, m	Temp, deg K	Exhaust Flow, m3/s	Exhaust Velocity, m/s	Emission Rates, g/s NOx	SO2	CO	PM10	Stack Diam, ft	Exh Temp, Deg F	Exh Flow Rate, ft3/m	Exhaust Velocity, ft/s	Emission Rates, lb/hr NOx	SO2	CO	PM10
Averaging Period: Eight hours CO																
Gas Turbine 1	6.7	339	642.3	18.2	n/a	n/a	5.2666	n/a	22	151	1,360,935	60	n/a	n/a	41.80	n/a
Gas Turbine 2	6.7	339	642.3	18.2	n/a	n/a	5.2666	n/a	22	151	1,360,935	60	n/a	n/a	41.80	n/a
Auxiliary Boiler	1.2	416	22.5	19.2	n/a	n/a	0.7217	n/a	4	289	47,617	63	n/a	n/a	5.73	n/a
Standby Generator 1	0.5	799	7.8	38.7	n/a	n/a	0.5992	n/a	1.7	978	16,616	127	n/a	n/a	4.76	n/a
Standby Generator 2	0.5	799	7.8	38.7	n/a	n/a	n/a	n/a	1.7	978	16,616	127	n/a	n/a	n/a	n/a
Emergency Firepump	0.2	665	1.0	53.2	n/a	n/a	n/a	n/a	0.5	738	2,058	175	n/a	n/a	n/a	n/a
Cooling Tower 1	n/a	n/a	n/a	n/a	n/a	n/a	n/a	n/a	n/a	n/a	n/a	n/a	n/a	n/a	n/a	n/a
Cooling Tower 2	n/a	n/a	n/a	n/a	n/a	n/a	n/a	n/a	n/a	n/a	n/a	n/a	n/a	n/a	n/a	n/a
Averaging Period: 24-hour SOx																
Gas Turbine 1	6.7	339	642.3	18.2	n/a	0.2306	n/a	n/a	22	151	1,360,935	60	n/a	1.83	n/a	n/a
Gas Turbine 2	6.7	339	642.3	18.2	n/a	0.2306	n/a	n/a	22	151	1,360,935	60	n/a	1.83	n/a	n/a
Auxiliary Boiler	1.2	416	22.5	19.2	n/a	0.0139	n/a	n/a	4	289	47,617	63	n/a	0.11	n/a	n/a
Standby Generator 1	0.5	799	7.8	38.7	n/a	0.0311	n/a	n/a	1.7	978	16,616	127	n/a	0.24718	n/a	n/a
Standby Generator 2	0.5	799	7.8	38.7	n/a	n/a	n/a	n/a	1.7	978	16,616	127	n/a	n/a	n/a	n/a
Emergency Firepump	0.2	665	1.0	53.2	n/a	n/a	n/a	n/a	0.5	738	2,058	175	n/a	n/a	n/a	n/a
Cooling Tower 1	n/a	n/a	n/a	n/a	n/a	n/a	n/a	n/a	n/a	n/a	n/a	n/a	n/a	n/a	n/a	n/a
Cooling Tower 2	n/a	n/a	n/a	n/a	n/a	n/a	n/a	n/a	n/a	n/a	n/a	n/a	n/a	n/a	n/a	n/a
Averaging Period: 24-hour PM10																
Gas Turbine 1	6.7	333	333.6	9.4	n/a	n/a	n/a	1.2600	22	139.6	706,856	31	n/a	n/a	n/a	10.00
Gas Turbine 2	6.7	333	333.6	9.4	n/a	n/a	n/a	1.2600	22	139.6	706,856	31	n/a	n/a	n/a	10.00
Auxiliary Boiler	1.2	416	22.5	19.2	n/a	n/a	n/a	0.1411	4	289	47,617	63	n/a	n/a	n/a	1.12
Standby Generator 1	0.5	799	7.8	38.7	n/a	n/a	n/a	0.0046	1.7	978	16,616	127	n/a	n/a	n/a	0.03672
Standby Generator 2	0.5	799	7.8	38.7	n/a	n/a	n/a	n/a	1.7	978	16,616	127	n/a	n/a	n/a	n/a
Emergency Firepump	0.2	665	1.0	53.2	n/a	n/a	n/a	n/a	0.5	738	2,058	175	n/a	n/a	n/a	n/a
Cooling Tower 1	9.8	296	763.6	10.2	n/a	n/a	n/a	0.0276	32	73	1,618,000	34	n/a	n/a	n/a	0.21871
Cooling Tower 2	9.8	296	763.6	10.2	n/a	n/a	n/a	0.0276	32	73	1,618,000	34	n/a	n/a	n/a	0.21871

Table A.2-3
Emission Rates and Stack Parameters for Refined Modeling (cont.)

	Stack Diam, m	Temp, deg K	Exhaust Flow, m3/s	Exhaust Velocity, m/s	Emission Rates, g/s NOx	SO2	CO	PM10	Stack Diam, ft	Exh Temp, Deg F	Exh Flow Rate, ft3/m	Exhaust Velocity, ft/s	Emission Rates, lb/hr NOx	SO2	CO	PM10
Averaging Period: Annual NOx and SOx																
Gas Turbine 1	6.7	339	642.3	18.2	3.0339	0.2306	n/a	n/a	22	151	1,360,935	60	24.08	1.83	n/a	n/a
Gas Turbine 2	6.7	339	642.3	18.2	3.0339	0.2306	n/a	n/a	22	151	1,360,935	60	24.08	1.83	n/a	n/a
Auxiliary Boiler	1.2	416	22.5	19.2	0.0443	0.0037	n/a	n/a	4	289	47,617	63	0.35181	0.02948	n/a	n/a
Standby Generator 1	0.5	799	7.8	38.7	0.0300	0.0007	n/a	n/a	1.7	978	16,616	127	0.23827	0.00564	n/a	n/a
Standby Generator 2	0.5	799	7.8	38.7	0.0300	0.0007	n/a	n/a	1.7	978	16,616	127	0.23827	0.00564	n/a	n/a
Emergency Firepump	0.2	665	1.0	53.2	0.0025	0.0001	n/a	n/a	0.5	738	2,058	175	0.01963	0.00057	n/a	n/a
Cooling Tower 1	n/a	n/a	n/a	n/a	n/a	n/a	n/a	n/a	n/a	n/a	n/a	n/a	n/a	n/a	n/a	n/a
Cooling Tower 2	n/a	n/a	n/a	n/a	n/a	n/a	n/a	n/a	n/a	n/a	n/a	n/a	n/a	n/a	n/a	n/a
Averaging Period: Annual PM10																
Gas Turbine 1	6.7	333	333.6	9.4	n/a	n/a	n/a	1.2600	22	139.6	706,856	31	n/a	n/a	n/a	10.00
Gas Turbine 2	6.7	333	333.6	9.4	n/a	n/a	n/a	1.2600	22	139.6	706,856	31	n/a	n/a	n/a	10.00
Auxiliary Boiler	1.2	416	22.5	19.2	n/a	n/a	n/a	0.0377	4	289	47,617	63	n/a	n/a	n/a	0.29918
Standby Generator 1	0.5	799	7.8	38.7	n/a	n/a	n/a	0.0001	1.7	978	16,616	127	n/a	n/a	n/a	0.00084
Standby Generator 2	0.5	799	7.8	38.7	n/a	n/a	n/a	0.0001	1.7	978	16,616	127	n/a	n/a	n/a	0.00084
Emergency Firepump	0.2	665	1.0	53.2	n/a	n/a	n/a	0.0000	0.5	738	2,058	175	n/a	n/a	n/a	0.00032
Cooling Tower 1	9.8	296	763.6	10.2	n/a	n/a	n/a	0.0276	32	73	1,618,000	34	n/a	n/a	n/a	0.21871
Cooling Tower 2	9.8	296	763.6	10.2	n/a	n/a	n/a	0.0276	32	73	1,618,000	34	n/a	n/a	n/a	0.21871

Table A.2-4 Summary of Building Dimensions Used for GEP Analysis			
Building	**Length (ft)**	**Width (ft)**	**Height (ft)**
HRSGs (2)			
Tier 1	329.6	52.5	58.0
Tier 2	95.5	52.5	89.8
Auxiliary Boiler			
Tier 1	38.2	23.9	28.0
Emergency Generator (2)			
Tier 1	52.5	9.6	20.0
Cooling Tower Bldg			
Tier 1	864.5	62.1	50.8
Water Treatment Bldg			
Tier 1	200.6	76.4	26.0
Administration Bldg			
Tier 1	234.0	57.3	25.0
Demineralized Water Tanks (2)			
Tier 1	38.2	38.2	40.0
Recycled Water Tank			
Tier 1	114.6	114.6	40.0
Fire Water Tank			
Tier 1	38.2	38.2	40.0
Waste Water Tank			
Tier 1	38.2	38.2	40.0
Thermal Water Tank			
Tier 1	105.1	105.1	60.0
Ammonia Tanks			
Tier 1	66.9	47.8	20.0

Table A.2-4 Summary of Building Dimensions Used for GEP Analysis			
Building	**Length (ft)**	**Width (ft)**	**Height (ft)**
Auxiliary Circulation Water Pumps (2)			
Tier 1	57.3	19.1	20.0
Control Bldg (2)			
Tier 1	38.2	14.3	20.0
Chemical Feed			
Tier 1	66.9	38.2	23.0
Excitation Transformers (2)			
Tier 1	76.4	76.4	20.0
Gas Conditioning Area (2)			
Tier 1	66.9	38.2	20.0
Gas Compressor PDC			
Tier 1	43.0	14.3	20.0
Gas Compressors (3)			
Tier 1	28.7	19.1	20.0
Fin Fan (3)			
Tier 1	38.2	19.1	20.0

3.1-3 Class I Impacts Modeling Analysis

APPENDIX 3.1-3

Revised Class I Area Impact Analysis
Inland Empire Energy Center

As a result of the proposed equipment changes for the Inland Empire Energy Center (IEEC), a revised analysis of air quality impacts in nearby Class I areas was performed. The approach used for this analysis follows the guidance provided by the Federal Land Managers (FLMs) for the Class I modeling analysis that was performed for the IEEC project in December 2002. As in the December 2002 analysis, two types of analyses were performed to evaluate potential visibility impacts on nearby Class I areas: (1) coherent plume impact analysis; and (2) regional haze analysis. A coherent plume impact analysis was performed on the following Class I areas located within 50 km of the project site:

- San Jacinto Wilderness Area
- Agua Tibia Wilderness Area
- San Gorgonio Wilderness

A regional haze analysis was performed on the following Class I areas located further than 50 km from the project site:

- Cucamonga Wilderness Area
- San Gabriel Wilderness Area
- Joshua Tree National Park

In addition, nitrogen and sulfur deposition was analyzed using CALPUFF for all six nearby Class I areas, regardless of distance. Table 1 lists the six nearby Class I areas along with the distance from each Class I area to the IEEC project site.

Table 1
Class I Areas Evaluated

Class I Area	FLM	Nearest Distance to Project (km)
Agua Tibia Wilderness	USFS	33.5
San Jacinto Wilderness	USFS	43.0
San Gorgonio Wilderness	USFS	46.0
Cucamonga Wilderness	USFS	64.5
Joshua Tree National Park	NPS	70.5
San Gabriel Wilderness	USFS	86.0

The following paragraphs discuss the details of each modeling analysis performed for the project.

VISCREEN COHERENT PLUME ANALYSIS

As recommended by the EPA Visibility Workbook (Revised 1992), normally a project would begin a coherent plume analysis by performing a Level-1 VISCREEN analysis. A Level-1 visual analysis requires the use of assumed worst-case meteorology, rather than the use of representative on-site meteorology. This includes use of F stability and a 1-meter per second wind that carries the plume to a hypothetical observer located in the Class I area. However, since the Level-1 analysis performed for the IEEC project in December 2002 showed impacts in the three nearby Class I areas greater than the color and contrast significance levels of 2.0 and 0.05, respectively, for the proposed equipment changes the Level-1 analysis was bypassed and a Level-2 VISCREEN analysis was performed for each of the three nearby Class I areas.

The objective of a Level-2 VISCREEN analysis is identical to that of a Level-1 analysis except that the transport time and topography representative of the project area are used rather than screening-level data. Since complex terrain separates the project site from each of the three nearby Class I areas, the use of E stability was used based upon EPA Visibility Workbook guidance. As shown by VISCREEN modeling examples included in the EPA Visibility Workbook, emissions for the project were based on maximum expected daily emission levels. Furthermore, as requested by the FLMs for the 2002 analysis, a wind speed of 1.5 m/s was used to represent transport time to each Class I area. In addition, to remain consistent with the analysis performed in 2002, several non-default options were employed in the analysis. These non-default options are mainly associated with plume mass diameter and density. A plume particle mass median diameter of 1.5 µm and density of 1 were used since the plume is generated from the combustion of natural gas, as opposed to coal.

The results of the Level 2 VISCREEN analysis are included as Attachment 2. As shown by these results, there are no exceedances of plume contrast or color significance levels within any of the three nearby Class I areas. Therefore, no further analysis is required. The VISCREEN modeling input and output files are included in an enclosed compact disk.

CALPUFF REGIONAL HAZE ANALYSIS

CALPUFF was used in a screening mode to assess regional haze impacts within the three Class I areas more than 50 km from the project site (Cucamonga and San Gabriel Wilderness areas, Joshua Tree National Park). The modeling followed screening guidance contained in IWAQM Phase 2 Summary Report (1998) and the FLAG Final Phase I report (December 2000).

As in the 2002 IEEC Class I analysis, three years of surface meteorological data (i.e., 1988 to 1990) collected at the Daggett airport were used for the CALPUFF analysis. Concurrent mixing heights from Desert Rock, Nevada and rainfall data from Los Angeles International Airport were also used.

CALPUFF requires the user to provide background concentrations of ozone and ammonia. Based on guidance provided by the FLMs for the 2002 IEEC analysis, an average ozone concentration of 64.7 ppb (from Joshua Tree National Park) and an average ammonia concentration of 10.0 ppb were used (grassland regions). As in the 2002 IEEC analysis, three receptor rings were created for each of these three Class I areas. Maximum hourly relative humidity was limited to 98%, as requested by the FLMs for the 2002 IEEC analysis. As with the 2002 IEEC Class I analysis, the emission rates used for the CALFUFF analysis were based on maximum expected annual average emission levels. Following guidance provided by the FLMs for the 2002 IEEC analysis, the PM10 emissions for the project were broken down into fractions of elemental carbon and organic carbon.

The results of the CALPUFF regional haze analysis are summarized in the following table for the three Class I areas located greater than 50 km from the project site. As shown in Table 2, except for impacts in the Joshua Tree National Park, the maximum predicted change in light extinction is less than the significance level of 5%. For Joshua Tree National Park, the exceedance of the 5% significance level is limited to four (4) days over a three year period (i.e., 1988 to 1990 metrological data set). NPS has the discretion to allow several exceedances of the visibility standard when multi-year meteorological data sets are used. Therefore, given that the impacts in excess of 5% are predicted to occur for only four days in a three-year period at one Class I area and given the fact that the project will be required by the South Coast Air Quality Management District (SCAQMD) under the New Source Review (NSR) and RECLAIM programs to offset all emission increases, no significant regional haze impacts are expected to occur in any of the Class I areas. The regional haze CALPUFF modeling input and output files are included in an enclosed compact disk.

Table 2
Model-Predicted Change in Light Extinction

Class I Area	Modeled % Change in B_{ext}	Significance Level % Change in B_{ext}
Cucamonga Wilderness	3.95%	5%
Joshua Tree National Park	6.41%	5%
San Gabriel Wilderness	2.84%	5%

CALPUFF NITRATE/SULFATE DESPOSTION ANALYSIS

Acid deposition (both wet and dry) is quantified by modeling the deposition rates of nitrogen- and sulfur-containing species. As in the 2002 IEEC Class I analysis, annual emission rates of NO_X, SO_2, and SO_4 were input into CALPUFF, which in turn calculated the deposition rates of secondary species. The SO_2 and PM_{10} emissions were adjusted to remove the sulfate component. Emissions of sulfates (SO_4) were then input as a separate species into the model.

Table 3 presents the maximum model-predicted nitrogen and sulfur deposition for all six Class I areas and compares these impacts with significance threshold of 0.005 kg/ha-yr. As shown on the following table, the model-predicted sulfur deposition rates were lower than this significance level for all six nearby Class I areas. Therefore, the deposition impacts for the project are not considered significant for sulfur species and additional refined analyses are unnecessary.

For the nitrogen species, three Class I areas have modeled impacts greater than the significance threshold of 0.005 kg/ha-yr (Agua Tibia, San Gorgonio, and San Jacinto Wilderness Areas). As shown in Figure 1, the meteorological data used in the Class I analysis (Daggett surface data) indicate that the predominant wind direction(s) are towards the San Gorgonio and San Jacinto Wilderness areas. The Daggett surface data were used in place of the locally collected Riverside meteorological data because Daggett is the nearest monitor that collects all of the surface metrological parameters necessary for a CALPUFF modeling run. Riverside meteorological data, collected by the SCAQMD, is the closest data set to the project site and is considered most representative of the project impact area. As shown in Figure 1, comparing the Daggett and Riverside wind roses shows that the local windfield would produce fewer transport conditions towards the Class I areas with the highest modeled impacts. Thus, the use of Daggett surface meteorology is conservative in that it produces a much higher frequency of wind directions towards these Class I areas. Regardless of the surface meteorology used in the analysis, the project will be required to offset NOx emissions at a ratio of 1:1 through participation in the SCAQMD's RECLAIM program. Consequently, no significant nitrogen deposition impacts are expected to occur in any of the Class I areas. The CALPUFF nitrogen/sulfate deposition input/output modeling files are included in an enclosed compact disk.

Table 3
Deposition Rates

AGUA TIBIAWILDERNESS AREA

Chemical Species	Deposition Rate (kg/ha-yr)	Significance Threshold (kg/ha-yr)
Total Nitrogen	0.010	0.005
Total Sulfur	0.001	0.005

CUCAMONGA WILDERNESS AREA

Chemical Species	Deposition Rate (kg/ha-yr)	Significance Threshold (kg/ha-yr)
Total Nitrogen	0.000	0.005
Total Sulfur	0.000	0.005

JOSHUA TREE NATIONAL PARK

Chemical Species	Deposition Rate (kg/ha-yr)	Significance Threshold (kg/ha-yr)
Total Nitrogen	0.0046	0.005
Total Sulfur	0.001	0.005

SAN GABRIEL WILDERNESS AREA

Chemical Species	Deposition Rate (kg/ha-yr)	Significance Threshold (kg/ha-yr)
Total Nitrogen	0.000	0.005
Total Sulfur	0.000	0.005

SAN GORGONIO WILDERNESS AREA

Chemical Species	Deposition Rate (kg/ha-yr)	Significance Threshold (kg/ha-yr)
Total Nitrogen	0.008	0.005
Total Sulfur	0.001	0.005

SAN JACINTO WILDERNESS AREA

Chemical Species	Deposition Rate (kg/ha-yr)	Significance Threshold (kg/ha-yr)
Total Nitrogen	0.009	0.005
Total Sulfur	0.001	0.005

Figure 1
Comparison of Daggett and Riverside Wind Roses

Note: Wind roses represent vector winds; Bars point in the direction towards which the wind is blowing.

CALPUFF PSD CLASS I INCREMENT ANALYSIS

While the project only triggers PSD review for NOx, in response to comments raised by the FLMs during their review of the IEEC project in 2002 a comparison of modeled NO_2, SO_2, and PM_{10} impacts and PSD Class I increments was performed. The maximum impacts predicted by the CALPUFF model are shown in Table 4. As shown in Table 4, the maximum modeled impacts for the project in the six nearby Class I areas are far below the PSD Class I increments and no additional modeling is required. The CALPUFF NO_2, SO_2, and PM_{10} Class I increments modeling files are included in an enclosed compact disk.

TABLE 4
COMPARISON OF MAXIMUM CLASS I IMPACTS AND CLASS I INCREMENTS

Class I Area	Maximum Impacts (ug/m^3)	PSD Class I Increments (ug/m^3)
Agua Tibia Wilderness Area	NO_2 (annual): 0.051	2.5
	SO_2 (3-hr): 0.168	25
	SO_2 (24-hr): 0.028	5
	SO_2 (annual): 0.004	2
	PM_{10} (24-hr): 0.225	8
	PM_{10} (annual): 0.033	4
Cucamonga Wilderness Area	NO_2 (annual): 0.001	2.5
	SO_2 (3-hr): 0.050	25
	SO_2 (24-hr): 0.008	5
	SO_2 (annual): 0.000	2
	PM_{10} (24-hr): 0.067	8
	PM_{10} (annual): 0.001	4

Class I Area	Maximum Impacts (ug/m^3)	PSD Class I Increments (ug/m^3)
Joshua Tree National Park	NO_2 (annual): 0.023 SO_2 (3-hr): 0.044 SO_2 (24-hr): 0.011 SO_2 (annual): 0.002 PM_{10} (24-hr): 0.104 PM_{10} (annual): 0.017	2.5 25 5 2 8 4
San Gabriel Wilderness Area	NO_2 (annual): 0.001 SO_2 (3-hr): 0.021 SO_2 (24-hr): 0.000 SO_2 (annual): 0.000 PM_{10} (24-hr): 0.047 PM_{10} (annual): 0.001	2.5 25 5 2 8 4
San Gorgonio Wilderness Area	NO_2 (annual): 0.042 SO_2 (3-hr): 0.072 SO_2 (24-hr): 0.020 SO_2 (annual): 0.003 PM_{10} (24-hr): 0.181 PM_{10} (annual): 0.029	2.5 25 5 2 8 4
San Jacinto Wilderness Area	NO_2 (annual): 0.045 SO_2 (3-hr): 0.094 SO_2 (24-hr): 0.024 SO_2 (annual): 0.003 PM_{10} (24-hr): 0.209 PM_{10} (annual): 0.030	2.5 25 5 2 8 4

ATTACHMENT 1

LEVEL-2 VISCREEN MODELING

Visual Effects Screening Analysis for
Source: Calpine IEEC
Class I Area: Agua Tibia

*** User-selected Screening Scenario Results ***

Input Emissions for

Particulates	2.22	G	/S
NOx (as NO2)	13.47	G	/S
Primary NO2	.00	G	/S
Soot	.63	G	/S
Primary SO4	.25	G	/S

PARTICLE CHARACTERISTICS

	Density	Diameter
Primary Part.	1.5	1
Soot	2.0	1
Sulfate	1.5	4

Transport Scenario Specifications:

Background Ozone: .06 ppm
Background Visual Range: 246.00 km
Source-Observer Distance: 33.50 km
Min. Source-Class I Distance: 33.50 km
Max. Source-Class I Distance: 44.75 km
Plume-Source-Observer Angle: 11.25 degrees
Stability: 5
Wind Speed: 1.50 m/s

R E S U L T S

Asterisks (*) indicate plume impacts that exceed screening criteria

Maximum Visual Impacts INSIDE Class I Area
Screening Criteria ARE NOT Exceeded

					Delta E		Contrast	
Backgrnd	Theta	Azi	Distance	Alpha	Crit	Plume	Crit	Plume
SKY	10.	140.	44.8	29.	2.00	.808	.05	-.016
SKY	140.	140.	44.8	29.	2.00	1.301	.05	-.032
TERRAIN	10.	84.	33.5	84.	2.00	1.717	.05	.012
TERRAIN	140.	84.	33.5	84.	2.00	.423	.05	.004

Maximum Visual Impacts OUTSIDE Class I Area
Screening Criteria ARE Exceeded

					Delta E		Contrast	
Backgrnd	Theta	Azi	Distance	Alpha	Crit	Plume	Crit	Plume
SKY	10.	0.	1.0	168.	2.00	10.473*	.05	-.115*
SKY	140.	0.	1.0	168.	2.00	8.577*	.05	-.255*
TERRAIN	10.	0.	1.0	168.	2.00	20.924*	.05	.258*
TERRAIN	140.	0.	1.0	168.	2.00	9.406*	.05	.195*

Visual Effects Screening Analysis for
Source: Calpine IEEC
Class I Area: San Jacinto

*** User-selected Screening Scenario Results ***

Input Emissions for

Particulates	2.22	G	/S
NOx (as NO2)	13.47	G	/S
Primary NO2	.00	G	/S
Soot	.63	G	/S
Primary SO4	.25	G	/S

PARTICLE CHARACTERISTICS

	Density	Diameter
Primary Part.	1.5	1
Soot	2.0	1
Sulfate	1.5	4

Transport Scenario Specifications:

Background Ozone:	.06 ppm
Background Visual Range:	246.00 km
Source-Observer Distance:	43.00 km
Min. Source-Class I Distance:	43.00 km
Max. Source-Class I Distance:	53.00 km
Plume-Source-Observer Angle:	11.25 degrees
Stability:	5
Wind Speed:	1.50 m/s

R E S U L T S

Asterisks (*) indicate plume impacts that exceed screening criteria

Maximum Visual Impacts INSIDE Class I Area
Screening Criteria ARE NOT Exceeded

					Delta E		Contrast	
Backgrnd	Theta	Azi	Distance	Alpha	Crit	Plume	Crit	Plume
SKY	10.	131.	53.0	38.	2.00	.602	.05	-.012
SKY	140.	131.	53.0	38.	2.00	.971	.05	-.024
TERRAIN	10.	84.	43.0	84.	2.00	1.289	.05	.011
TERRAIN	140.	84.	43.0	84.	2.00	.350	.05	.004

Maximum Visual Impacts OUTSIDE Class I Area
Screening Criteria ARE Exceeded

					Delta E		Contrast	
Backgrnd	Theta	Azi	Distance	Alpha	Crit	Plume	Crit	Plume
SKY	10.	0.	1.0	168.	2.00	9.190*	.05	-.100*
SKY	140.	0.	1.0	168.	2.00	7.739*	.05	-.220*
TERRAIN	10.	0.	1.0	168.	2.00	18.150*	.05	.228*
TERRAIN	140.	0.	1.0	168.	2.00	8.524*	.05	.185*

Visual Effects Screening Analysis for
Source: Calpine IEEC
Class I Area: San Gorgonio

*** User-selected Screening Scenario Results ***

Input Emissions for

Particulates	2.22	G	/S
NOx (as NO2)	13.47	G	/S
Primary NO2	.00	G	/S
Soot	.63	G	/S
Primary SO4	.25	G	/S

PARTICLE CHARACTERISTICS

	Density	Diameter
Primary Part.	1.5	1
Soot	2.0	1
Sulfate	1.5	4

Transport Scenario Specifications:

Background Ozone: .06 ppm
Background Visual Range: 248.00 km
Source-Observer Distance: 46.00 km
Min. Source-Class I Distance: 46.00 km
Max. Source-Class I Distance: 54.00 km
Plume-Source-Observer Angle: 11.25 degrees
Stability: 5
Wind Speed: 1.50 m/s

R E S U L T S

Asterisks (*) indicate plume impacts that exceed screening criteria

Maximum Visual Impacts INSIDE Class I Area
Screening Criteria ARE NOT Exceeded

Backgrnd	Theta	Azi	Distance	Alpha	Delta E Crit	Delta E Plume	Contrast Crit	Contrast Plume
SKY	10.	123.	54.0	45.	2.00	.515	.05	-.011
SKY	140.	123.	54.0	45.	2.00	.870	.05	-.021
TERRAIN	10.	84.	46.0	84.	2.00	1.205	.05	.010
TERRAIN	140.	84.	46.0	84.	2.00	.333	.05	.004

Maximum Visual Impacts OUTSIDE Class I Area
Screening Criteria ARE Exceeded

Backgrnd	Theta	Azi	Distance	Alpha	Delta E Crit	Delta E Plume	Contrast Crit	Contrast Plume
SKY	10.	0.	1.0	169.	2.00	8.755*	.05	-.094*
SKY	140.	0.	1.0	169.	2.00	7.580*	.05	-.212*
TERRAIN	10.	0.	1.0	169.	2.00	17.501*	.05	.221*
TERRAIN	140.	0.	1.0	169.	2.00	8.344*	.05	.181*

APPENDIX A.1

DETAILED EMISSION CALCULATIONS

Table A.1-1
Gas Turbines Detailed Hourly Emission Calculations

Standard Conditions: 60 F 30 in. Hg
Reference O2: 15.00%

Operating Cases	1) Hot Base	2) Hot Low	3) Avg. Base	4) Avg. Low	5) Cold Base	6) Cold Low
Ambient Temperature (F)	98	98	63	63	36	36
Ambient Humidity (%)	27.00%	27.00%	52.30%	52.30%	66.10%	66.10%
Load	100%	50%	100%	50%	100%	50%
Fuel Moisture (lbs/hr)	17,623	8,423	18,328	9,255	19,098	10,102
Turbine Fuel Flow Rates						
scfm	39,670	18,979	41,122	21,702	42,670	23,606
lbs/hr	105,880	50,655	109,755	57,923	113,888	63,005
MMBtu/hr (HHV)	2,414.9	1,155.4	2,503.3	1,321.1	2,597.6	1,437.0
MMBtu/hr (LHV)	2,178.0	1,042.0	2,257.7	1,191.5	2,342.7	1,296.0
Exhaust Gas Parameters						
Exhaust Flow Rate (wacfm)	1,314,943	663,233	1,346,804	706,856	1,360,935	759,243
Exhaust Flow Rate (dscfm)	923,094	488,578	961,096	528,096	1,000,305	575,248
Exhaust Flow Rate (lbs/hr)	4,558,156	2,397,151	4,723,340	2,588,130	4,898,810	2,809,622
Stack Temperature (F)	171.2	146.4	165.5	139.6	150.6	134.4
H2O, vol %, wet basis	9.99%	9.26%	9.33%	9.01%	8.84%	8.52%
H2O, mass %, wet basis	6.40%	5.92%	5.96%	5.75%	5.63%	5.43%
Diluent Concentrations						
O2 (%), dry basis	13.19%	13.94%	13.22%	13.53%	13.25%	13.54%
CO2 (%), dry basis	4.43%	4.00%	4.41%	4.23%	4.39%	4.23%
Reference O2 (%), dry basis	15.00%	15.00%	15.00%	15.00%	15.00%	15.00%
Pollutant Concentrations at Actual O2						
VOC as CH4, ppmvd	2.61	2.36	2.60	2.49	2.59	2.49
CO, ppmvd	3.91	3.54	3.90	3.74	3.88	3.74
NOx, ppmvd	2.61	2.36	2.60	2.49	2.59	2.49
SOx, ppmvd	0.18	0.16	0.18	0.17	0.18	0.17
NH3, ppmvd	6.52	5.89	6.49	6.24	6.47	6.23
PM10 (gr/dscf)	0.0013	0.0024	0.0012	0.0022	0.0012	0.0020
Pollutant Concentrations at Ref. O2						
VOC as CH4, ppmvd	2.0	2.0	2.0	2.0	2.0	2.0
CO, ppmvd	3.0	3.0	3.0	3.0	3.0	3.0
NOx, ppmvd	2.0	2.0	2.0	2.0	2.0	2.0
SOx, ppmvd	0.1396	0.1396	0.1396	0.1396	0.1396	0.1396
NH3, ppmvd	5.0	5.0	5.0	5.0	5.0	5.0
Emission Rates (lbs/MMBtu)						
VOC as CH4	0.0025	0.0025	0.0025	0.0025	0.0025	0.0025
CO	0.0066	0.0066	0.0066	0.0066	0.0066	0.0066
NOx	0.0072	0.0072	0.0072	0.0072	0.0072	0.0072
SOx	0.0007	0.0007	0.0007	0.0007	0.0007	0.0007
NH3	0.0067	0.0067	0.0067	0.0067	0.0067	0.0067
PM10	0.0041	0.0087	0.0040	0.0076	0.0038	0.0070
Emission Rates (lbs/hour)						
VOC as CH4	6.10	2.92	6.33	3.34	6.57	3.63
CO	15.99	7.65	16.57	8.75	17.19	9.51
NOx	17.50	8.37	18.14	9.58	18.83	10.42
SOx	1.70	0.81	1.76	0.93	1.83	1.01
NH3	16.20	7.75	16.79	8.86	17.42	9.64
PM10	10.00	10.00	10.00	10.00	10.00	10.00

Table A.1-2
Detailed Calculations for Maximum Hourly, Daily, and Annual Criteria Pollutant Emissions

	Base Load			Startup			NOx			SOx		CO		VOC		PM10	
Equipment	max. hour	hrs/day	hrs/yr	max. hour	hrs/day	hrs/yr	Base Load lb/hr	Startup* lb/hr	Startup** lb/hr	Base Load lb/hr	Startup lb/hr	Base Load lb/hr	Startup lb/hr	Base Load lb/hr	Startup lb/hr	Base Load lb/hr	Startup lb/hr
Gas Turbine 1, baseload hot	0	0	0	0	0	0	17.50	0.00	0.00	1.70	0.00	15.99	0.00	6.10	0.00	10.00	0.00
Gas Turbine 2, baseload hot	0	0	0	0	0	0	17.50	0.00	0.00	1.70	0.00	15.99	0.00	6.10	0.00	10.00	0.00
Gas Turbine 1, baseload avg.	0	0	0	0	0	0	18.14	0.00	0.00	1.76	0.00	16.57	0.00	6.33	0.00	10.00	0.00
Gas Turbine 2, baseload avg.	0	0	0	0	0	0	18.14	0.00	0.00	1.76	0.00	16.57	0.00	6.33	0.00	10.00	0.00
Gas Turbine 1, baseload cold	0	18	8360	0	0	0	18.83	0.00	0.00	1.83	0.00	17.19	0.00	6.57	0.00	10.00	0.00
Gas Turbine 2, baseload cold	0	18	8360	0	0	0	18.83	0.00	0.00	1.83	0.00	17.19	0.00	6.57	0.00	10.00	0.00
Gas Turbine 1, startups	0	0	0	1	6	400	0.00	408.00	275.00	0.00	1.83	0.00	95.00	0.00	16.00	0.00	10.00
Gas Turbine 2, startups	0	0	0	1	6	400	0.00	408.00	275.00	0.00	1.83	0.00	95.00	0.00	16.00	0.00	10.00
Auxiliary Boiler	1	24	2340	0	0	0	1.32	0.00	0.00	0.11	0.00	5.73	0.00	0.66	0.00	1.12	0.00
Standby Generator Engine 1	1	6	50	0	0	0	41.75	0.00	0.00	0.99	0.00	6.34	0.00	0.88	0.00	0.15	0.00
Standby Generator Engine 2	0	0	50	0	0	0	41.75	0.00	0.00	0.99	0.00	6.34	0.00	0.88	0.00	0.15	0.00
Emergency Firepump Engine	0	0	50	0	0	0	3.44	0.00	0.00	0.10	0.00	0.18	0.00	0.10	0.00	0.06	0.00
Cooling Tower 1	1	24	8760	0	0	0	0.00	0.00	0.00	0.00	0.00	0.00	0.00	0.00	0.00	1.75	0.00
Cooling Tower 2	1	24	8760	0	0	0	0.00	0.00	0.00	0.00	0.00	0.00	0.00	0.00	0.00	1.75	0.00

Notes:
* NOx emission level when a single gas turbine is in startup.
** NOx emission level when both gas turbines are in startup (based on a combined NOx level of 550 lbs/hr for both units).

Table A.1-3
Detailed Calculations for Maximum Hourly, Daily, and Annual Criteria Pollutant Emissions

	NOx			SOx			CO			VOC			PM10		
Equipment	Max lb/hr	Max lb/day	Total tpy	Max lb/hr	Max lb/day	Total tpy	Max lb/hr	Max lb/day	Total tpy	Max lb/hr	Max lb/day	Total tpy	Max lb/hr	Max lb/day	Total tpy
Gas Turbine 1, baseload hot	0.00	0.00	0.00	0.00	0.00	0.00	0.00	0.00	0.00	0.00	0.00	0.00	0.00	0.00	0.00
Gas Turbine 2, baseload hot	0.00	0.00	0.00	0.00	0.00	0.00	0.00	0.00	0.00	0.00	0.00	0.00	0.00	0.00	0.00
Gas Turbine 1, baseload avg.	0.00	0.00	0.00	0.00	0.00	0.00	0.00	0.00	0.00	0.00	0.00	0.00	0.00	0.00	0.00
Gas Turbine 2, baseload avg.	0.00	0.00	0.00	0.00	0.00	0.00	0.00	0.00	0.00	0.00	0.00	0.00	0.00	0.00	0.00
Gas Turbine 1, baseload cold	0.00	338.89	78.70	0.00	32.95	7.65	0.00	309.50	71.87	0.00	118.18	27.44	0.00	180.00	41.80
Gas Turbine 2, baseload cold	0.00	338.89	78.70	0.00	32.95	7.65	0.00	309.50	71.87	0.00	118.18	27.44	0.00	180.00	41.80
Gas Turbine 1, startups	275.00	803.00	26.77	1.83	10.98	0.37	95.00	300.00	19.00	16.00	48.00	3.20	10.00	60.00	2.00
Gas Turbine 2, startups	275.00	803.00	26.77	1.83	10.98	0.37	95.00	300.00	19.00	16.00	48.00	3.20	10.00	60.00	2.00
Auxiliary Boiler	1.32	31.61	1.54	0.11	2.65	0.13	5.73	137.47	6.70	0.66	15.75	0.77	1.12	26.88	1.31
Standby Generator Engine 1	41.75	250.47	1.04	0.99	5.93	0.02	6.34	38.04	0.16	0.88	5.27	0.02	0.15	0.88	0.00
Standby Generator Engine 2	0.00	0.00	1.04	0.00	0.00	0.02	0.00	0.00	0.16	0.00	0.00	0.02	0.00	0.00	0.00
Emergency Firepump Engine	0.00	0.00	0.09	0.00	0.00	0.00	0.00	0.00	0.00	0.00	0.00	0.00	0.00	0.00	0.00
Cooling Tower 1	0.00	0.00	0.00	0.00	0.00	0.00	0.00	0.00	0.00	0.00	0.00	0.00	1.75	41.99	7.66
Cooling Tower 2	0.00	0.00	0.00	0.00	0.00	0.00	0.00	0.00	0.00	0.00	0.00	0.00	1.75	41.99	7.66
Total	593.06 lb/hr	2565.87 lb/day	214.65 tpy	4.76 lb/hr	96.44 lb/day	16.22 tpy	202.07 lb/hr	1394.52 lb/day	188.77 tpy	33.53 lb/hr	353.38 lb/day	62.10 tpy	24.77 lb/hr	591.75 lb/day	104.25 tpy

Table A.1-4
Auxiliary Boiler

Rating (MMBtu/hr) =	156.6
Fuel =	Natural Gas
Exhaust Temperature (F) =	289
Stack Diameter (ft) =	4
Exhaust Flow Rate (acfm) =	47,616.67
Exhaust Velocity (ft/sec) =	63.15

	NOx	CO	VOC	SOx	PM10	NH3
Exhaust Concentration (ppm @ 3% O2) =	7	50	10			5
Hourly Emissions (lbs/hr) =	1.32	5.73	0.66	0.11	1.12	0.35

Table A.1-5
Standby/Emergency Engines

Standby Generator Engines					
Rating (bhp) =	2,848				
Fuel =	Diesel				
Fuel Consumption (gal/hr) =	144.0				
Exhaust Temperature (F) =	978.3				
Exhaust Diameter (inches) =	20				
Exhaust Flow Rate (acfm) =	16,616				
Exhaust Velocity (ft/sec) =	127				
	NOx	CO	VOC	SOx	PM10
Emission Factor (g/bhp-hr) =	6.65	1.01	0.14	0.16	0.02
Hourly Emissions per Engine (lbs/hr) =	41.75	6.34	0.88	0.99	0.15

Emergency Firepump Engine					
Rating (bhp) =	300				
Fuel =	Diesel				
Fuel Consumption (gal/hr) =	14.5				
Exhaust Temperature (F) =	738				
Exhaust Diameter (inches) =	6				
Exhaust Flow Rate (acfm) =	2,058				
Exhaust Velocity (ft/sec) =	175				
	NOx	CO	VOC	SOx	PM10
Emission Factor (g/bhp-hr) =	5.20	0.27	0.15	0.15	0.09
Hourly Emissions (lbs/hr) =	3.44	0.18	0.10	0.10	0.06

Table A.1-6

Calculation of Cooling Tower Emissions

Number of towers	2
Number of cells per tower	8
Fan stack diameter (ft)	32
Exhaust temperature (F)	73.29
Exhaust flow rate per cell (acfm)	1,618,000
Water Circulation Rate, gal/min	89,597
Drift Rate	0.0005%
Water Drift (lbs/hr)	223.90
TDS Level, mg/L	7800
PM10 lb/hr per tower	1.75
PM10 emissions per cell, lb/hr	0.219
PM10 emissions per cell, g/s	0.028

Table A.1-7
Calculation of NOx RECLAIM Trading Credits During Normal Year

Number of hot starts per year =	0
Duration of hot start (hrs/start) =	1
Hours of hot start per year (hrs/year) =	0
Number of cold starts per year =	0
Duration of cold start (hrs/start) =	6
Hours of cold start per year (hrs/year)=	0
Duration gas turbine offline prior to hot start (hrs) =	2
Hours gas turbine offline per year due to hot starts (hrs/year) =	0
Duration gas turbine offline prior to cold start (hrs) =	72
Hours gas turbine offline per year due to cold starts (hrs/year) =	0
Hours gas turbine baseline operation per year (hrs/year) =	8760
Gas turbine baseline operating case =	Annual Avg. Temp.
Gas turbine baseline NOx concentration (ppmvd @ 15% 02) =	2
NOx emission rate during baseline operation (lbs/hr) =	18.1
NOx emission rate during starts (lbs/hr) =	125
Auxiliary boiler operation per year (hrs/year) =	600
Auxiliary boiler NOx emission rate (lbs/hr) =	1.32
Standby generator engine operation per year (hrs/year) =	50
Standby generator engine NOx emission rate (lbs/hr) =	41.7
Emergency firepump engine operation per year (hrs/year) =	50
Emergency firepump engine NOx emission rate (lbs/hr) =	3.4
Annual NOx emissions hot starts per turbine (lbs/yr) =	0
Annual NOx emissions cold starts per turbine (lbs/yr) =	0
Annual NOx emissions baseline operation per turbine (lbs/yr) =	158,943
Total NOx emissions per turbine (lbs/yr) =	158,943
Total NOx emissions both turbines (lbs/yr) =	317,887
NOx emissions for auxiliary boiler (lbs/yr) =	790
NOx emissions for both standby generator engines (lbs/yr) =	4,175
NOx emissions for emergency firepump engine (lbs/yr) =	172
Total NOx RTC requirement for facility (lbs/yr) =	**323,023**

Table A.1-8
Calculation of NOx RECLAIM Trading Credits During 1st Year

Commissioning period for gas turbine #1 (days) =	110
Commissioning period for gas turbine #2 (days) =	57
Stager in commissioning periods (days) =	30
Normal operating period after commissioning for gas turbine #1 (days) =	255
Normal operating period after commissioning for gas turbine #1 (hours) =	6120
Normal operating period after commissioning for gas turbine #2 (days) =	278
Normal operating period after commissioning for gas turbine #2 (hours) =	6672
Hourly NOx emissions during normal operation per gas turbine (lbs/hr) =	18.1
NOx emissions during commissioning period for gas turbine #1 (lbs) =	54,569
NOx emissions during commissioning period for gas turbine #2 (lbs) =	31,160
NOx emissions during normal operating period following commissioning for gas turbine #1 (lbs) =	111,043
NOx emissions during normal operating period following commissioning for gas turbine #2 (lbs) =	121,058
Total NOx emissions for gas turbine #1 (lbs) =	165,612
Total NOx emissions for gas turbine #2 (lbs) =	152,218
Auxiliary boiler operation per year (hrs/year) =	600
Auxiliary boiler NOx emission rate (lbs/hr) =	1.32
Auxiliary boiler NOx emissions (lbs) =	790
Standby generator engine operation per year (hrs/year) =	50
Standby generator engine NOx emission rate (lbs/hr) =	41.75
Both standby generators NOx emissions (lbs) =	4,175
Emergency firepump engine operation per year (hrs/year) =	50
Emergency firepump engine NOx emission rate (lbs/hr) =	3.44
Emergency firepump NOx emissions (lbs) =	172
Total NOx RTC requirement for facility (lbs/yr) =	**322,967**

Table A.1-9
Calculation of Emission Offset Credits

Gas Turbine Operating Mode	Hours(1) Per Month	Hourly Emissions CO Emissions (lbs/hr)	VOC Emissions (lbs/hr)	SOx Emissions (lbs/hr)	PM10 Emissions (lbs/hr)	Monthly Emissions CO Emissions (lbs/month)	VOC Emissions (lbs/month)	SOx Emissions (lbs/month)	PM10 Emissions (lbs/month)
Gas Turbine 1, 36F, 100%	713	11.46	4.60	1.83	10.00	8,173	3,277	1,305	7,130
Gas Turbine 2, 36F, 100%	713	11.46	4.60	1.83	10.00	8,173	3,277	1,305	7,130
Gas Turbine 1, Startups	31	50.00	16.00	1.83	10.00	1,550	496	57	310
Gas Turbine 2, Startups	31	50.00	16.00	1.83	10.00	1,550	496	57	310
Auxiliary Boiler	195	5.73	0.66	0.11	1.12	1,117	128	22	218
Subtotal (Gas Turbine 1) =						9,723	3,773	1,362	7,440
Subtotal (Gas Turbine 2) =						9,723	3,773	1,362	7,440
Subtotal (Auxiliary Boiler) =						1,117	128	22	218
Total =						20,563	7,674	2,745	15,098
Average Daily Emissions (lbs/day)(2)									
Gas Turbine 1 =						324	126	45	248
Gas Turbine 2 =						324	126	45	248
Auxiliary Boiler =						37	4	1	7
Total =						685	256	92	503
Offset Ratio(3) =						1.2	1.2	1.0	1.0
ERCs Required (lbs/day)									
Gas Turbine 1 =						389	151	45	248
Gas Turbine 2 =						389	151	45	248
Auxiliary Boiler =						45	5	1	7
Total =						823	307	92	503

Notes:
1. For gas turbines, based on 1 hr per day of startup, 23 hrs per day of 100% load, and 31 days of operation per month.
2. Based on SCAQMD NSR rule requirement to calculate average daily emission based on 30 days per month.
3. Based on SCAQMD NSR rule offset ratio.

APPENDIX A.2

DETAILED AIR QUALITY MODELING INPUTS

Table A.2-1

Screening Modeling Inputs

Data For Each Turbine

Case	Amb Temp deg F	Stack height feet	Stack Height meters	Stack Diam feet	Stack Diam meters	Stack flow wacfm	Stack flow m3/sec	Stack Vel ft/sec	Stack Vel m/sec	Stack Temp deg F	Stack Temp deg K
1. Hot Base	98	195.0	59.44	22.0	6.71	1,314,943	620.67	57.65	17.57	171.2	350.48
2. Hot Low	98	195.0	59.44	22.0	6.71	663,233	313.05	29.08	8.86	146.4	336.71
3. Avg. Base	63	195.0	59.44	22.0	6.71	1,346,804	635.70	59.05	18.00	165.5	347.32
4. Avg. Low	63	195.0	59.44	22.0	6.71	706,856	333.64	30.99	9.45	139.6	332.93
5. Cold Base	36	195.0	59.44	22.0	6.71	1,360,935	642.37	59.67	18.19	150.6	339.04
6. Cold Low	36	195.0	59.44	22.0	6.71	759,243	358.37	33.29	10.15	134.4	330.04

	NOx lb/hr	CO lb/hr	PM10 lb/hr	SOx lb/hr	NOx g/sec	CO g/sec	PM10 g/sec	SOx g/sec
1. Hot Base	17.50	15.99	10.00	1.70	2.205	2.014	1.260	0.214
2. Hot Low	8.37	7.65	10.00	0.81	1.055	0.964	1.260	0.103
3. Avg. Base	18.14	16.57	10.00	1.76	2.286	2.088	1.260	0.222
4. Avg. Low	9.58	8.75	10.00	0.93	1.207	1.102	1.260	0.117
5. Cold Base	18.83	17.19	10.00	1.83	2.372	2.167	1.260	0.231
6. Cold Low	10.42	9.51	10.00	1.01	1.312	1.199	1.260	0.128

Table A.2-2
Screening Level Modeling Impacts
(Combined Impacts for Two Gas Turbines)

Operating Mode	Conc. (ug/m3) NO2 1-hr	Conc. (ug/m3) CO 1-hr	Conc. (ug/m3) SO2 1-hr	Conc. (ug/m3) SO2 3-hr	Conc. (ug/m3) CO 8-hr	Conc. (ug/m3) PM10 24-hr	Conc. (ug/m3) SO2 24-hr	Conc. (ug/m3) NO2 Annual	Conc. (ug/m3) PM10 Annual	Conc. (ug/m3) SO2 Annual
1. Hot Base	26.79	24.46	2.60	2.43	14.41	4.71	0.80	1.31	0.75	0.13
2. Hot Low	16.84	15.38	1.64	1.54	9.01	6.29	0.51	0.77	0.92	0.07
3. Avg. Base	28.28	25.83	2.75	2.53	15.13	4.75	0.84	1.37	0.76	0.13
4. Avg. Low	19.39	17.71	1.89	1.77	10.32	6.30	0.59	0.88	0.92	0.09
5. Cold Base	31.83	29.07	3.09	2.75	16.79	4.94	0.90	1.47	0.78	0.14
6. Cold Low	21.31	19.46	2.07	1.92	11.21	6.29	0.64	0.95	0.91	0.09

Table A.2-3
Emission Rates and Stack Parameters for Refined Modeling

					Emission Rates, g/s								Emission Rates, lb/hr			
	Stack Diam, m	Temp, deg K	Exhaust Flow, m3/s	Exhaust Velocity, m/s	NOx	SO2	CO	PM10	Stack Diam, ft	Exh Temp, Deg F	Exh Flow Rate, ft3/m	Exhaust Velocity, ft/s	NOx	SO2	CO	PM10
Averaging Period: One hour NOx																
Gas Turbine 1	6.7	339	642.3	18.2	2.3723	n/a	n/a	n/a	22	151	1,360,935	60	18.83	n/a	n/a	n/a
Gas Turbine 2	6.7	339	642.3	18.2	2.3723	n/a	n/a	n/a	22	151	1,360,935	60	18.83	n/a	n/a	n/a
Auxiliary Boiler	1.2	416	22.5	19.2	0.1659	n/a	n/a	n/a	4	289	47,617	63	1.32	n/a	n/a	n/a
Standby Generator 1	0.5	799	7.8	38.7	5.2600	n/a	n/a	n/a	1.7	978	16,616	127	41.75	n/a	n/a	n/a
Standby Generator 2	0.5	799	7.8	38.7	n/a	n/a	n/a	n/a	1.7	978	16,616	127	n/a	n/a	n/a	n/a
Emergency Firepump	0.2	665	1.0	53.2	n/a	n/a	n/a	n/a	0.5	738	2,058	175	n/a	n/a	n/a	n/a
Cooling Tower 1	n/a	n/a	n/a	n/a	n/a	n/a	n/a	n/a	n/a	n/a	n/a	n/a	n/a	n/a	n/a	n/a
Cooling Tower 2	n/a	n/a	n/a	n/a	n/a	n/a	n/a	n/a	n/a	n/a	n/a	n/a	n/a	n/a	n/a	n/a
Averaging Period: One hour CO and SOx																
Gas Turbine 1	6.7	339	642.3	18.2	n/a	0.2306	2.1665	n/a	22	151	1,360,935	60	n/a	1.83	17.19	n/a
Gas Turbine 2	6.7	339	642.3	18.2	n/a	0.2306	2.1665	n/a	22	151	1,360,935	60	n/a	1.83	17.19	n/a
Auxiliary Boiler	1.2	416	22.5	19.2	n/a	0.0139	0.7217	n/a	4	289	47,617	63	n/a	0.11	5.73	n/a
Standby Generator 1	0.5	799	7.8	38.7	n/a	0.1246	0.7989	n/a	1.7	978	16,616	127	n/a	0.99	6.34	n/a
Standby Generator 2	0.5	799	7.8	38.7	n/a	n/a	n/a	n/a	1.7	978	16,616	127	n/a	n/a	n/a	n/a
Emergency Firepump	0.2	665	1.0	53.2	n/a	n/a	n/a	n/a	0.5	738	2,058	175	n/a	n/a	n/a	n/a
Cooling Tower 1	n/a	n/a	n/a	n/a	n/a	n/a	n/a	n/a	n/a	n/a	n/a	n/a	n/a	n/a	n/a	n/a
Cooling Tower 2	n/a	n/a	n/a	n/a	n/a	n/a	n/a	n/a	n/a	n/a	n/a	n/a	n/a	n/a	n/a	n/a
Averaging Period: Three hours SOx																
Gas Turbine 1	6.7	339	642.3	18.2	n/a	0.2306	n/a	n/a	22	151	1,360,935	60	n/a	1.83	n/a	n/a
Gas Turbine 2	6.7	339	642.3	18.2	n/a	0.2306	n/a	n/a	22	151	1,360,935	60	n/a	1.83	n/a	n/a
Auxiliary Boiler	1.2	416	22.5	19.2	n/a	0.0139	n/a	n/a	4	289	47,617	63	n/a	0.11	n/a	n/a
Standby Generator 1	0.5	799	7.8	38.7	n/a	0.1246	n/a	n/a	1.7	978	16,616	127	n/a	0.99	n/a	n/a
Standby Generator 2	0.5	799	7.8	38.7	n/a	n/a	n/a	n/a	1.7	978	16,616	127	n/a	n/a	n/a	n/a
Emergency Firepump	0.2	665	1.0	53.2	n/a	n/a	n/a	n/a	0.5	738	2,058	175	n/a	n/a	n/a	n/a
Cooling Tower 1	n/a	n/a	n/a	n/a	n/a	n/a	n/a	n/a	n/a	n/a	n/a	n/a	n/a	n/a	n/a	n/a
Cooling Tower 2	n/a	n/a	n/a	n/a	n/a	n/a	n/a	n/a	n/a	n/a	n/a	n/a	n/a	n/a	n/a	n/a

Table A.2-3
Emission Rates and Stack Parameters for Refined Modeling (cont.)

	Stack Diam, m	Temp, deg K	Exhaust Flow, m3/s	Exhaust Velocity, m/s	Emission Rates, g/s NOx	SO2	CO	PM10	Stack Diam, ft	Exh Temp, Deg F	Exh Flow Rate, ft3/m	Exhaust Velocity, ft/s	Emission Rates, lb/hr NOx	SO2	CO	PM10
Averaging Period: Eight hours CO																
Gas Turbine 1	6.7	339	642.3	18.2	n/a	n/a	5.2666	n/a	22	151	1,360,935	60	n/a	n/a	41.80	n/a
Gas Turbine 2	6.7	339	642.3	18.2	n/a	n/a	5.2666	n/a	22	151	1,360,935	60	n/a	n/a	41.80	n/a
Auxiliary Boiler	1.2	416	22.5	19.2	n/a	n/a	0.7217	n/a	4	289	47,617	63	n/a	n/a	5.73	n/a
Standby Generator 1	0.5	799	7.8	38.7	n/a	n/a	0.5992	n/a	1.7	978	16,616	127	n/a	n/a	4.76	n/a
Standby Generator 2	0.5	799	7.8	38.7	n/a	n/a	n/a	n/a	1.7	978	16,616	127	n/a	n/a	n/a	n/a
Emergency Firepump	0.2	665	1.0	53.2	n/a	n/a	n/a	n/a	0.5	738	2,058	175	n/a	n/a	n/a	n/a
Cooling Tower 1	n/a	n/a	n/a	n/a	n/a	n/a	n/a	n/a	n/a	n/a	n/a	n/a	n/a	n/a	n/a	n/a
Cooling Tower 2	n/a	n/a	n/a	n/a	n/a	n/a	n/a	n/a	n/a	n/a	n/a	n/a	n/a	n/a	n/a	n/a
Averaging Period: 24-hour SOx																
Gas Turbine 1	6.7	339	642.3	18.2	n/a	0.2306	n/a	n/a	22	151	1,360,935	60	n/a	1.83	n/a	n/a
Gas Turbine 2	6.7	339	642.3	18.2	n/a	0.2306	n/a	n/a	22	151	1,360,935	60	n/a	1.83	n/a	n/a
Auxiliary Boiler	1.2	416	22.5	19.2	n/a	0.0139	n/a	n/a	4	289	47,617	63	n/a	0.11	n/a	n/a
Standby Generator 1	0.5	799	7.8	38.7	n/a	0.0311	n/a	n/a	1.7	978	16,616	127	n/a	0.24718	n/a	n/a
Standby Generator 2	0.5	799	7.8	38.7	n/a	n/a	n/a	n/a	1.7	978	16,616	127	n/a	n/a	n/a	n/a
Emergency Firepump	0.2	665	1.0	53.2	n/a	n/a	n/a	n/a	0.5	738	2,058	175	n/a	n/a	n/a	n/a
Cooling Tower 1	n/a	n/a	n/a	n/a	n/a	n/a	n/a	n/a	n/a	n/a	n/a	n/a	n/a	n/a	n/a	n/a
Cooling Tower 2	n/a	n/a	n/a	n/a	n/a	n/a	n/a	n/a	n/a	n/a	n/a	n/a	n/a	n/a	n/a	n/a
Averaging Period: 24-hour PM10																
Gas Turbine 1	6.7	333	333.6	9.4	n/a	n/a	n/a	1.2600	22	139.6	706,856	31	n/a	n/a	n/a	10.00
Gas Turbine 2	6.7	333	333.6	9.4	n/a	n/a	n/a	1.2600	22	139.6	706,856	31	n/a	n/a	n/a	10.00
Auxiliary Boiler	1.2	416	22.5	19.2	n/a	n/a	n/a	0.1411	4	289	47,617	63	n/a	n/a	n/a	1.12
Standby Generator 1	0.5	799	7.8	38.7	n/a	n/a	n/a	0.0046	1.7	978	16,616	127	n/a	n/a	n/a	0.03672
Standby Generator 2	0.5	799	7.8	38.7	n/a	n/a	n/a	n/a	1.7	978	16,616	127	n/a	n/a	n/a	n/a
Emergency Firepump	0.2	665	1.0	53.2	n/a	n/a	n/a	n/a	0.5	738	2,058	175	n/a	n/a	n/a	n/a
Cooling Tower 1	9.8	296	763.6	10.2	n/a	n/a	n/a	0.0276	32	73	1,618,000	34	n/a	n/a	n/a	0.21871
Cooling Tower 2	9.8	296	763.6	10.2	n/a	n/a	n/a	0.0276	32	73	1,618,000	34	n/a	n/a	n/a	0.21871

Table A.2-3
Emission Rates and Stack Parameters for Refined Modeling (cont.)

	Stack Diam, m	Temp, deg K	Exhaust Flow, m3/s	Exhaust Velocity, m/s	Emission Rates, g/s NOx	SO2	CO	PM10	Stack Diam, ft	Exh Temp, Deg F	Exh Flow Rate, ft3/m	Exhaust Velocity, ft/s	Emission Rates, lb/hr NOx	SO2	CO	PM10
Averaging Period: Annual NOx and SOx																
Gas Turbine 1	6.7	339	642.3	18.2	3.0339	0.2306	n/a	n/a	22	151	1,360,935	60	24.08	1.83	n/a	n/a
Gas Turbine 2	6.7	339	642.3	18.2	3.0339	0.2306	n/a	n/a	22	151	1,360,935	60	24.08	1.83	n/a	n/a
Auxiliary Boiler	1.2	416	22.5	19.2	0.0443	0.0037	n/a	n/a	4	289	47,617	63	0.35181	0.02948	n/a	n/a
Standby Generator 1	0.5	799	7.8	38.7	0.0300	0.0007	n/a	n/a	1.7	978	16,616	127	0.23827	0.00564	n/a	n/a
Standby Generator 2	0.5	799	7.8	38.7	0.0300	0.0007	n/a	n/a	1.7	978	16,616	127	0.23827	0.00564	n/a	n/a
Emergency Firepump	0.2	665	1.0	53.2	0.0025	0.0001	n/a	n/a	0.5	738	2,058	175	0.01963	0.00057	n/a	n/a
Cooling Tower 1	n/a	n/a	n/a	n/a	n/a	n/a	n/a	n/a	n/a	n/a	n/a	n/a	n/a	n/a	n/a	n/a
Cooling Tower 2	n/a	n/a	n/a	n/a	n/a	n/a	n/a	n/a	n/a	n/a	n/a	n/a	n/a	n/a	n/a	n/a
Averaging Period: Annual PM10																
Gas Turbine 1	6.7	333	333.6	9.4	n/a	n/a	n/a	1.2600	22	139.6	706,856	31	n/a	n/a	n/a	10.00
Gas Turbine 2	6.7	333	333.6	9.4	n/a	n/a	n/a	1.2600	22	139.6	706,856	31	n/a	n/a	n/a	10.00
Auxiliary Boiler	1.2	416	22.5	19.2	n/a	n/a	n/a	0.0377	4	289	47,617	63	n/a	n/a	n/a	0.29918
Standby Generator 1	0.5	799	7.8	38.7	n/a	n/a	n/a	0.0001	1.7	978	16,616	127	n/a	n/a	n/a	0.00084
Standby Generator 2	0.5	799	7.8	38.7	n/a	n/a	n/a	0.0001	1.7	978	16,616	127	n/a	n/a	n/a	0.00084
Emergency Firepump	0.2	665	1.0	53.2	n/a	n/a	n/a	0.0000	0.5	738	2,058	175	n/a	n/a	n/a	0.00032
Cooling Tower 1	9.8	296	763.6	10.2	n/a	n/a	n/a	0.0276	32	73	1,618,000	34	n/a	n/a	n/a	0.21871
Cooling Tower 2	9.8	296	763.6	10.2	n/a	n/a	n/a	0.0276	32	73	1,618,000	34	n/a	n/a	n/a	0.21871

Table A.2-4 Summary of Building Dimensions Used for GEP Analysis			
Building	**Length (ft)**	**Width (ft)**	**Height (ft)**
HRSGs (2)			
Tier 1	329.6	52.5	58.0
Tier 2	95.5	52.5	89.8
Auxiliary Boiler			
Tier 1	38.2	23.9	28.0
Emergency Generator (2)			
Tier 1	52.5	9.6	20.0
Cooling Tower Bldg			
Tier 1	864.5	62.1	50.8
Water Treatment Bldg			
Tier 1	200.6	76.4	26.0
Administration Bldg			
Tier 1	234.0	57.3	25.0
Demineralized Water Tanks (2)			
Tier 1	38.2	38.2	40.0
Recycled Water Tank			
Tier 1	114.6	114.6	40.0
Fire Water Tank			
Tier 1	38.2	38.2	40.0
Waste Water Tank			
Tier 1	38.2	38.2	40.0
Thermal Water Tank			
Tier 1	105.1	105.1	60.0
Ammonia Tanks			
Tier 1	66.9	47.8	20.0

Table A.2-4 Summary of Building Dimensions Used for GEP Analysis			
Building	**Length (ft)**	**Width (ft)**	**Height (ft)**
Auxiliary Circulation Water Pumps (2)			
Tier 1	57.3	19.1	20.0
Control Bldg (2)			
Tier 1	38.2	14.3	20.0
Chemical Feed			
Tier 1	66.9	38.2	23.0
Excitation Transformers (2)			
Tier 1	76.4	76.4	20.0
Gas Conditioning Area (2)			
Tier 1	66.9	38.2	20.0
Gas Compressor PDC			
Tier 1	43.0	14.3	20.0
Gas Compressors (3)			
Tier 1	28.7	19.1	20.0
Fin Fan (3)			
Tier 1	38.2	19.1	20.0

APPENDIX A.4

DETAILED GAS TURBINE PM_{10} EMISSION INFORMATION

Calpine and Sierra Research Assessment of PM_{10} Emission Rate for Inland Empire Energy Center

A total of 90 PM tests were performed on seven F-class combustion turbines located at three Calpine facilities in California: the Sutter Energy Center, in the Feather River AQMD; and the Los Medanos and Delta Energy Centers located in the Bay Area AQMD. These tests were performed between 2001 and 2004 in accordance with protocols that were reviewed by the governing APCDs. Of these 90 tests, four were identified as outliers. All of the outliers were from tests performed in June 2002 at the Sutter Energy Center. Tests of the same units before and after the outlier tests demonstrated emission rates substantially below the outlier results.

The average emission rates measured during these tests were as follows:

All tests:	0.00268 lbs/MMbtu	(90 tests)
Outlier tests:	0.01591 lbs/MMbtu	(4 tests)
Non-outlier tests:	0.00207 lbs/MMbtu	(86 tests)

Although all of the tests were performed using test methods that were approved by the governing air districts, in 2002 the US EPA rejected the use of one of the test methods (EPA Method 8) for the determination of back-half particulates from gas-fired combustion equipment. Since Method 8 has not been approved by the SCAQMD for this purpose either, a second analysis was performed looking at a subset of the test results. This subset includes measurements based on the use of SCAQMD-approved Methods 201a/202. A total of 45 tests were performed using these methods; these tests include the four outliers referenced above. The average emission rates measured during the 45 tests were as follows:

All tests:	0.00334 lbs/MMbtu	(45 tests)
Outlier tests:	0.01591 lbs/MMbtu	(4 tests)
Non-outlier tests:	0.00211 lbs/MMbtu	(41 tests)

When the outlier results are excluded, the results obtained using Methods 201a/202 were not significantly different for these tests as compared with those from the complete data set.

The maximum hourly heat input rate for the combustion turbines proposed for the Inland Empire Energy Center is 2597 MMbtu/hr. The expected PM10 emission rate associated with this firing rate is 5.5 lbs/hr (2,597 MMBtu/hr * 0.00211 lbs/MMBtu), based on the assumption that the F-class turbine test results can be extrapolated to the larger turbine on the basis of heat input rate. (The average heat input rate for the 41 non-outlier tests was 1,923 MMbtu/hr. It is believed that an extrapolation based on heat input rate is reasonable between the F-class heat input rate and H-class heat input rate.)

Calpine's experience with PM10 testing strongly suggests that variability is reduced when the test crews have experience with the methods. This is shown by looking at the emission rates by calendar year (Method 201a/202 results only):

2002, non-outlier tests:	0.00355 lbs/MMbtu
2003, non-outlier tests:	0.00133 lbs/MMbtu
2004, non-outlier tests:	0.00153 lbs/MMbtu

Although no specific changes to testing procedures were established by Calpine after the 2002 tests, the experience gained with the variability observed in 2002 enabled the two test firms principally used by Calpine to further refine their quality control techniques. Assuming the average of the 2003/2004 values, 0.00143 lbs/MMbtu, this is equivalent to an expected PM10 emissions rate of 3.7 lbs/hr at the maximum rated heat input for the H-class turbine.

The 2002 to 2004 data for the Method 201a/202 results indicate that the standard deviation of the test results is approximately 110% of the mean value. Looking at the variability year-by-year, however, the relative standard deviation declined from 98% in 2002 to 63% in 2003, and again to 23% in 2004.

Assuming that the standard deviation is 43% of the mean for repeated tests performed on the same engine (the average of the 2003 and 2004 values), the mean plus three standard deviation emission rate for the H-class turbine would be (3.7 + 3 * (0.43 * 3.7)) = 8.5 lbs/hr. This was rounded up to10 lbs/hr to provide an additional margin of safety.

Gas Turbine PM Test Result Summary - Gas Fired Units - Calpine California F-Class Turbines - Methods 201/202

Unit ID	Test ID	Project Name	Unit Name	Test Date	Turbine	Nominal Rating	H2O	DLN	SCR	Ox Cat	Heat Input (MMbtu/hr) HHV	F/H Method	B/H Method	Sampling Time (min)	F/H (lbs/hr)	B/H (lbs/hr)	Total PM10 All (lbs/hr)	Total PM10 Outliers (lbs/hr)	Total PM10 Excluding Outliers (lbs/hr)	Emissions Rate All (lbs/MMBtu)	Emissions Rate Outliers (lbs/MMBtu)	Emissions Rate Excluding Outliers (lbs/MMBtu)
38	4	Sutter Energy	1	6/20/02	S/W 501F	185 MW	N	Y	Y	Y	1807	EPA 201	EPA 202p	275	8.36	22.10	30.47	30.47		0.016862	0.016862	
38	5	Sutter Energy	1	6/21/02	S/W 501F	185 MW	N	Y	Y	Y	1802	EPA 201	EPA 202p	228	4.16	20.14	24.29	24.29		0.013481	0.013481	
38	6	Sutter Energy	1	6/24/02	S/W 501F	185 MW	N	Y	Y	Y	1796	EPA 201	EPA 202p	269	7.42	23.72	31.13	31.13		0.017335	0.017335	
38	1	Sutter Energy	1	10/6/02	S/W 501F	185 MW	N	Y	Y	Y	2036	EPA 201	EPA 202p	265	3.79	5.49	9.28		9.28	0.004557		0.004557
38	2	Sutter Energy	1	10/7/02	S/W 501F	185 MW	N	Y	Y	Y	1839	EPA 201	EPA 202p	186	10.03	3.46	13.48		13.48	0.007330		0.007330
38	3	Sutter Energy	1	10/7/02	S/W 501F	185 MW	N	Y	Y	Y	1832	EPA 201	EPA 202p	259	2.73	2.67	5.40		5.40	0.002948		0.002948
39	4	Sutter Energy	2	6/27/02	S/W 501F	185 MW	N	Y	Y	Y	1738	EPA 201	EPA 202p	162	5.97	21.76	27.74	27.74		0.015957	0.015957	
39	5	Sutter Energy	2	6/28/02	S/W 501F	185 MW	N	Y	Y	Y	1793	EPA 201	EPA 202p	270	4.87	16.37	21.24		21.24	0.011847		0.011847
39	6	Sutter Energy	2	6/28/02	S/W 501F	185 MW	N	Y	Y	Y	1812	EPA 201	EPA 202p	272	4.95	12.05	17.00		17.00	0.009382		0.009382
39	1	Sutter Energy	2	10/8/02	S/W 501F	185 MW	N	Y	Y	Y	1881	EPA 201	EPA 202p	272	2.81	3.35	6.17		6.17	0.003279		0.003279
39	2	Sutter Energy	2	10/9/02	S/W 501F	185 MW	N	Y	Y	Y	1941	EPA 201	EPA 202p	244	3.21	2.89	6.10		6.10	0.003141		0.003141
39	3	Sutter Energy	2	10/9/02	S/W 501F	185 MW	N	Y	Y	Y	1830	EPA 201	EPA 202p	256	1.29	2.97	4.25		4.25	0.002325		0.002325
38	1	Sutter Energy	1	6/16/03	S/W 501F	185 MW	N	Y	Y	Y	1856	EPA 201	EPA 202p	252	0.24	0.10	0.34		0.34	0.000180		0.000180
38	2	Sutter Energy	1	6/17/03	S/W 501F	185 MW	N	Y	Y	Y	1910	EPA 201	EPA 202p	245	0.33	0.35	0.68		0.68	0.000357		0.000357
38	3	Sutter Energy	1	6/17/03	S/W 501F	185 MW	N	Y	Y	Y	1912	EPA 201	EPA 202p	245	0.50	1.29	1.79		1.79	0.000936		0.000936
39	1	Sutter Energy	2	6/18/03	S/W 501F	185 MW	N	Y	Y	Y	1824	EPA 201	EPA 202p	252	1.01	1.20	2.21		2.21	0.001213		0.001213
39	2	Sutter Energy	2	6/19/03	S/W 501F	185 MW	N	Y	Y	Y	1836	EPA 201	EPA 202p	252	1.17	0.00	1.17		1.17	0.000640		0.000640
39	3	Sutter Energy	2	6/19/03	S/W 501F	185 MW	N	Y	Y	Y	1824	EPA 201	EPA 202p	252	0.08	1.50	1.59		1.59	0.000870		0.000870
38	1	Sutter Energy	1	6/15/04	S/W 501F	185 MW	N	Y	Y	Y	1782	EPA 201	EPA 202p	260	0.62	2.26	2.88		2.88	0.001616		0.001616
38	2	Sutter Energy	1	6/16/04	S/W 501F	185 MW	N	Y	Y	Y	1865	EPA 201	EPA 202p	260	1.00	2.46	3.46		3.46	0.001855		0.001855
38	3	Sutter Energy	1	6/16/04	S/W 501F	185 MW	N	Y	Y	Y	1868	EPA 201	EPA 202p	257	0.73	1.22	1.95		1.95	0.001044		0.001044
39	4	Sutter Energy	2	6/17/04	S/W 501F	185 MW	N	Y	Y	Y	1878	EPA 201	EPA 202p	266	1.67	2.02	3.69		3.69	0.001965		0.001965
39	5	Sutter Energy	2	6/17/04	S/W 501F	185 MW	N	Y	Y	Y	1885	EPA 201	EPA 202p	269	1.10	1.38	2.48		2.48	0.001316		0.001316
39	6	Sutter Energy	2	6/18/04	S/W 501F	185 MW	N	Y	Y	Y	1876	EPA 201	EPA 202p	253	0.77	1.79	2.56		2.56	0.001365		0.001365
40	1	Los Medanos	1	9/23/02	GE 7FA	185 MW	N	Y	Y	Y	1935	EPA 201	EPA 202p	261	0.19	0.40	0.59		0.59	0.000302		0.000302
40	2	Los Medanos	1	9/24/02	GE 7FA	185 MW	N	Y	Y	Y	1933	EPA 201	EPA 202p	256	0.25	1.83	2.08		2.08	0.001077		0.001077
40	3	Los Medanos	1	9/25/02	GE 7FA	185 MW	N	Y	Y	Y	*1934*	EPA 201	EPA 202p	257	0.00	2.93	2.93		2.93	0.001516		0.001516
40	4	Los Medanos	2	9/26/02	GE 7FA	185 MW	N	Y	Y	Y	1935	EPA 201	EPA 202p	269	0.00	1.60	1.60		1.60	0.000824		0.000824
40	5	Los Medanos	2	9/27/02	GE 7FA	185 MW	N	Y	Y	Y	1944	EPA 201	EPA 202p	250	0.12	0.65	0.77		0.77	0.000395		0.000395
40	6	Los Medanos	2	9/27/02	GE 7FA	185 MW	N	Y	Y	Y	1940	EPA 201	EPA 202p	247	0.65	0.74	1.39		1.39	0.000719		0.000719
40	1	Los Medanos	1	9/16/03	GE 7FA	185 MW	N	Y	Y	Y	1899	EPA 201	EPA 202p	240	0.00	1.82	1.82		1.82	0.000957		0.000957
40	2	Los Medanos	1	9/17/03	GE 7FA	185 MW	N	Y	Y	Y	1980	EPA 201	EPA 202p	240	0.00	1.30	1.30		1.30	0.000655		0.000655
40	3	Los Medanos	1	9/17/03	GE 7FA	185 MW	N	Y	Y	Y	1949	EPA 201	EPA 202p	240	0.06	0.48	0.54		0.54	0.000276		0.000276
40	4	Los Medanos	2	9/18/03	GE 7FA	185 MW	N	Y	Y	Y	1991	EPA 201	EPA 202p	240	0.35	2.69	3.04		3.04	0.001527		0.001527
40	5	Los Medanos	2	9/19/03	GE 7FA	185 MW	N	Y	Y	Y	2012	EPA 201	EPA 202p	240	0.55	1.13	1.68		1.68	0.000835		0.000835
40	6	Los Medanos	2	9/19/03	GE 7FA	185 MW	N	Y	Y	Y	1993	EPA 201	EPA 202p	240	0.41	1.57	1.99		1.99	0.000998		0.000998
56	1	Delta Energy	1	6/2/03	S/W 501F	185 MW	N	Y	Y	N	2026	EPA 201	EPA 202p	240	0.00	3.30	3.30		3.30	0.001631		0.001631
56	2	Delta Energy	1	6/3/03	S/W 501F	185 MW	N	Y	Y	N	2004	EPA 201	EPA 202p	240	0.00	3.71	3.71		3.71	0.001849		0.001849
56	3	Delta Energy	1	6/3/03	S/W 501F	185 MW	N	Y	Y	N	2027	EPA 201	EPA 202p	240	0.11	2.13	2.24		2.24	0.001104		0.001104
57	1	Delta Energy	2	7/8/03	S/W 501F	185 MW	N	Y	Y	N	1974	EPA 201	EPA 202p	240	2.54	2.54	5.07		5.07	0.002569		0.002569
57	2	Delta Energy	2	7/8/03	S/W 501F	185 MW	N	Y	Y	N	2012	EPA 201	EPA 202p	240	2.57	3.55	6.12		6.12	0.003041		0.003041
57	3	Delta Energy	2	7/9/03	S/W 501F	185 MW	N	Y	Y	N	1972	EPA 201	EPA 202p	240	2.01	2.51	4.52		4.52	0.002290		0.002290
58	1	Delta Energy	3	6/4/03	S/W 501F	185 MW	N	Y	Y	N	2041	EPA 201	EPA 202p	241	0.00	2.66	2.66		2.66	0.001304		0.001304
58	2	Delta Energy	3	7/10/03	S/W 501F	185 MW	N	Y	Y	N	2026	EPA 201	EPA 202p	240	2.36	3.13	5.49		5.49	0.002709		0.002709
58	3	Delta Energy	3	7/10/03	S/W 501F	185 MW	N	Y	Y	N	2031	EPA 201	EPA 202p	241	0.73	3.14	3.88		3.88	0.001909		0.001909

	Total PM10 (F/H + B/H) Mean (lb/hr)	Standard Deviation (lb/hr)	Standard Deviation (%)	Heat Input (MMbtu/hr) HHV	Emissions Rate (lbs/MMBtu)	Number of Tests
Overall	6.18	8.17	132%	1,911	0.00334	45
Outliers Only	28.41				0.01591	4
Overall, Excluding Outliers	4.01	4.30	107%	1,923	0.00211	41
2002 Only, Excluding Outliers	6.59	6.45	98%	1,899	0.00355	14
2003 Only, Excluding Outliers	2.62	1.65	63%	1,957	0.00133	21
2004 Only, Excluding Outliers	2.84	0.65	23%	1,859	0.00153	6
2003/2004 Average			43%		0.00143	
H-Class Unit	3.70	1.59	43%	2,597	0.00143	
Outlier "n" Standard Deviations	2					
Outlier Limit	22.52					

Gas Turbine PM Test Result Summary - Gas Fired Units - Calpine California F-Class Turbines - All Methods

Unit ID	Test ID	Project Name	Unit Name	Test Date	Turbine	Nominal Rating	H2O	DLN	SCR	Ox Cat	Heat Input (MMbtu/hr) HHV	F/H Method	B/H Method	Sampling Time (min)	F/H (lbs/hr)	B/H (lbs/hr)	Total PM10 All (lbs/hr)	Total PM10 Outliers (lbs/hr)	Total PM10 Excluding Outliers (lbs/hr)	Emissions Rate All (lbs/MMBtu)	Emissions Rate Outliers (lbs/MMBtu)	Emissions Rate Excluding Outliers (lbs/MMBtu)
38	1	Sutter Energy	1	6/25/01	S/W 501F	185 MW	N	Y	Y	Y	1767	EPA 201	EPA 8	265	1.40	1.36	2.76		2.76	0.001563		0.001563
38	2	Sutter Energy	1	6/26/01	S/W 501F	185 MW	N	Y	Y	Y	1861	EPA 201	EPA 8	266	0.97	1.50	2.47		2.47	0.001325		0.001325
38	3	Sutter Energy	1	6/26/01	S/W 501F	185 MW	N	Y	Y	Y	1885	EPA 201	EPA 8	254	0.91	2.47	3.38		3.38	0.001794		0.001794
38	4	Sutter Energy	1	1/8/02	S/W 501F	185 MW	N	Y	Y	Y	1908	EPA 201	EPA 8	252	1.75	2.62	4.37		4.37	0.002290		0.002290
38	5	Sutter Energy	1	1/9/02	S/W 501F	185 MW	N	Y	Y	Y	1917	EPA 201	EPA 8	252	1.04	2.83	3.87		3.87	0.002019		0.002019
38	6	Sutter Energy	1	1/9/02	S/W 501F	185 MW	N	Y	Y	Y	1915	EPA 201	EPA 8	248	1.35	2.48	3.83		3.83	0.002000		0.002000
38	4	Sutter Energy	1	1/10/02	S/W 501F	185 MW	N	Y	Y	Y	2030	EPA 201	EPA 8	248	0.01	2.02	2.03		2.03	0.001000		0.001000
38	5	Sutter Energy	1	1/11/02	S/W 501F	185 MW	N	Y	Y	Y	2032	EPA 201	EPA 8	252	1.14	2.99	4.13		4.13	0.002032		0.002032
38	6	Sutter Energy	1	1/11/02	S/W 501F	185 MW	N	Y	Y	Y	2015	EPA 201	EPA 8	251	0.00	2.32	2.32		2.32	0.001151		0.001151
38	4	Sutter Energy	1	6/20/02	S/W 501F	185 MW	N	Y	Y	Y	1807	EPA 201	EPA 202p	275	8.36	22.10	30.47	30.47		0.016862	0.016862	
38	4	Sutter Energy	1	6/20/02	S/W 501F	185 MW	N	Y	Y	Y	1807	EPA 5	EPA 8	275	3.55	3.84	7.39		7.39	0.004090		0.004090
38	5	Sutter Energy	1	6/21/02	S/W 501F	185 MW	N	Y	Y	Y	1802	EPA 201	EPA 202p	228	4.16	20.14	24.29	24.29		0.013481	0.013481	
38	5	Sutter Energy	1	6/21/02	S/W 501F	185 MW	N	Y	Y	Y	1802	EPA 5	EPA 8	228	1.54	3.07	4.61		4.61	0.002558		0.002558
38	6	Sutter Energy	1	6/24/02	S/W 501F	185 MW	N	Y	Y	Y	1796	EPA 201	EPA 202p	269	7.42	23.72	31.13	31.13		0.017335	0.017335	
38	6	Sutter Energy	1	6/24/02	S/W 501F	185 MW	N	Y	Y	Y	1796	EPA 5	EPA 8	269	2.87	2.83	5.70		5.70	0.003174		0.003174
38	1	Sutter Energy	1	10/6/02	S/W 501F	185 MW	N	Y	Y	Y	2036	EPA 201	EPA 202p	265	3.79	5.49	9.28		9.28	0.004557		0.004557
38	1	Sutter Energy	1	10/6/02	S/W 501F	185 MW	N	Y	Y	Y	1796	EPA 5	EPA 8	265	2.45	1.92	4.37		4.37	0.002433		0.002433
38	2	Sutter Energy	1	10/7/02	S/W 501F	185 MW	N	Y	Y	Y	1839	EPA 201	EPA 202p	186	10.03	3.46	13.48		13.48	0.007330		0.007330
38	2	Sutter Energy	1	10/7/02	S/W 501F	185 MW	N	Y	Y	Y	2036	EPA 5	EPA 8	186	3.06	1.33	4.39		4.39	0.002157		0.002157
38	3	Sutter Energy	1	10/7/02	S/W 501F	185 MW	N	Y	Y	Y	1832	EPA 201	EPA 202p	259	2.73	2.67	5.40		5.40	0.002948		0.002948
38	3	Sutter Energy	1	10/7/02	S/W 501F	185 MW	N	Y	Y	Y	1839	EPA 5	EPA 8	259	3.33	1.57	4.90		4.90	0.002664		0.002664
39	1	Sutter Energy	2	6/27/01	S/W 501F	185 MW	N	Y	Y	Y	1894	EPA 201	EPA 8	258	0.76	2.98	3.75		3.75	0.001979		0.001979
39	2	Sutter Energy	2	6/28/01	S/W 501F	185 MW	N	Y	Y	Y	1888	EPA 201	EPA 8	258	0.51	0.99	1.51		1.51	0.000799		0.000799
39	3	Sutter Energy	2	6/28/01	S/W 501F	185 MW	N	Y	Y	Y	1864	EPA 201	EPA 8	258	0.51	1.34	1.85		1.85	0.000995		0.000995
39	4	Sutter Energy	2	1/30/02	S/W 501F	185 MW	N	Y	Y	Y	1844	EPA 201	EPA 8	249	6.54	1.42	7.96		7.96	0.004317		0.004317
39	5	Sutter Energy	2	1/31/02	S/W 501F	185 MW	N	Y	Y	Y	1851	EPA 201	EPA 8	260	5.46	1.21	6.67		6.67	0.003603		0.003603
39	6	Sutter Energy	2	2/1/02	S/W 501F	185 MW	N	Y	Y	Y	1850	EPA 201	EPA 8	249	3.03	2.55	5.58		5.58	0.003016		0.003016
39	4	Sutter Energy	2	2/2/02	S/W 501F	185 MW	N	Y	Y	Y	1980	EPA 201	EPA 8	240	2.90	2.18	5.08		5.08	0.002565		0.002565
39	5	Sutter Energy	2	2/2/02	S/W 501F	185 MW	N	Y	Y	Y	1987	EPA 201	EPA 8	256	2.62	0.63	3.25		3.25	0.001635		0.001635
39	6	Sutter Energy	2	2/3/02	S/W 501F	185 MW	N	Y	Y	Y	2023	EPA 201	EPA 8	247	2.00	1.34	3.34		3.34	0.001651		0.001651
39	4	Sutter Energy	2	6/27/02	S/W 501F	185 MW	N	Y	Y	Y	1738	EPA 201	EPA 202p	162	5.97	21.76	27.74	27.74		0.015957	0.015957	
39	4	Sutter Energy	2	6/27/02	S/W 501F	185 MW	N	Y	Y	Y	1738	EPA 5	EPA 8	162	3.11	2.70	5.81		5.81	0.003343		0.003343
39	5	Sutter Energy	2	6/28/02	S/W 501F	185 MW	N	Y	Y	Y	1793	EPA 201	EPA 202p	270	4.87	16.37	21.24		21.24	0.011847		0.011847
39	5	Sutter Energy	2	6/28/02	S/W 501F	185 MW	N	Y	Y	Y	1793	EPA 5	EPA 8	270	1.53	2.31	3.84		3.84	0.002142		0.002142
39	6	Sutter Energy	2	6/28/02	S/W 501F	185 MW	N	Y	Y	Y	1812	EPA 201	EPA 202p	272	4.95	12.05	17.00		17.00	0.009382		0.009382
39	6	Sutter Energy	2	6/28/02	S/W 501F	185 MW	N	Y	Y	Y	1812	EPA 5	EPA 8	272	1.25	2.57	3.82		3.82	0.002109		0.002109
39	1	Sutter Energy	2	10/8/02	S/W 501F	185 MW	N	Y	Y	Y	1881	EPA 201	EPA 202p	272	2.81	3.35	6.17		6.17	0.003279		0.003279
39	1	Sutter Energy	2	10/8/02	S/W 501F	185 MW	N	Y	Y	Y	1812	EPA 5	EPA 8	272	0.99	1.45	2.44		2.44	0.001347		0.001347
39	2	Sutter Energy	2	10/9/02	S/W 501F	185 MW	N	Y	Y	Y	1941	EPA 201	EPA 202p	244	3.21	2.89	6.10		6.10	0.003141		0.003141
39	2	Sutter Energy	2	10/9/02	S/W 501F	185 MW	N	Y	Y	Y	1881	EPA 5	EPA 8	244	2.24	1.07	3.31		3.31	0.001760		0.001760
39	3	Sutter Energy	2	10/9/02	S/W 501F	185 MW	N	Y	Y	Y	1830	EPA 201	EPA 202p	256	1.29	2.97	4.25		4.25	0.002325		0.002325
39	3	Sutter Energy	2	10/9/02	S/W 501F	185 MW	N	Y	Y	Y	1941	EPA 5	EPA 8	256	2.22	1.09	3.31		3.31	0.001705		0.001705
40	1	Los Medanos	1	8/19/01	GE 7FA	185 MW	N	Y	Y	Y	1845	EPA 201	EPA 8	280	1.75	4.35	6.10		6.10	0.003306		0.003306
40	2	Los Medanos	1	8/19/01	GE 7FA	185 MW	N	Y	Y	Y	1889	EPA 201	EPA 8	279	0.82	2.84	3.66		3.66	0.001938		0.001938
40	3	Los Medanos	1	8/19/01	GE 7FA	185 MW	N	Y	Y	Y	1865	EPA 201	EPA 8	248	1.29	1.97	3.26		3.26	0.001748		0.001748
41	1	Los Medanos	2	8/19/01	GE 7FA	185 MW	N	Y	Y	Y	1844	EPA 201	EPA 8	251	0.86	3.10	3.96		3.96	0.002147		0.002147
41	2	Los Medanos	2	8/19/01	GE 7FA	185 MW	N	Y	Y	Y	1886	EPA 201	EPA 8	249	0.66	1.75	2.41		2.41	0.001278		0.001278
41	3	Los Medanos	2	8/19/01	GE 7FA	185 MW	N	Y	Y	Y	1940	EPA 201	EPA 8	252	1.07	1.08	2.15		2.15	0.001108		0.001108
56	1	Delta Energy	1	4/20/02	S/W 501F	185 MW	N	Y	Y	N	2049	EPA 201	EPA 8	240	0.82	4.53	5.35		5.35	0.002611		0.002611
56	2	Delta Energy	1	4/20/02	S/W 501F	185 MW	N	Y	Y	N	2114	EPA 201	EPA 8	240	1.10	4.83	5.94		5.94	0.002810		0.002810
56	3	Delta Energy	1	4/21/02	S/W 501F	185 MW	N	Y	Y	N	2094	EPA 201	EPA 8	240	1.20	3.71	4.91		4.91	0.002345		0.002345
57	1	Delta Energy	2	4/21/02	S/W 501F	185 MW	N	Y	Y	N	2098	EPA 201	EPA 8	240	0.80	1.11	1.91		1.91	0.000909		0.000909
57	2	Delta Energy	2	4/21/02	S/W 501F	185 MW	N	Y	Y	N	2044	EPA 201	EPA 8	240	0.60	2.45	3.04		3.04	0.001490		0.001490
57	3	Delta Energy	2	4/22/02	S/W 501F	185 MW	N	Y	Y	N	2040	EPA 201	EPA 8	240	0.84	1.32	2.16		2.16	0.001058		0.001058
58	1	Delta Energy	3	4/26/02	S/W 501F	185 MW	N	Y	Y	N	2122	EPA 201	EPA 8	240	0.89	1.62	2.51		2.51	0.001183		0.001183
58	2	Delta Energy	3	4/26/02	S/W 501F	185 MW	N	Y	Y	N	2117	EPA 201	EPA 8	240	0.54	1.92	2.46		2.46	0.001162		0.001162
58	3	Delta Energy	3	4/26/02	S/W 501F	185 MW	N	Y	Y	N	2095	EPA 201	EPA 8	240	0.43	1.68	2.12		2.12	0.001011		0.001011
38	1	Sutter Energy	1	6/16/03	S/W 501F	185 MW	N	Y	Y	Y	1856	EPA 201	EPA 202p	252	0.24	0.10	0.34		0.34	0.000180		0.000180
38	2	Sutter Energy	1	6/17/03	S/W 501F	185 MW	N	Y	Y	Y	1910	EPA 201	EPA 202p	245	0.33	0.35	0.68		0.68	0.000357		0.000357
38	3	Sutter Energy	1	6/17/03	S/W 501F	185 MW	N	Y	Y	Y	1912	EPA 201	EPA 202p	245	0.50	1.29	1.79		1.79	0.000936		0.000936
39	1	Sutter Energy	2	6/18/03	S/W 501F	185 MW	N	Y	Y	Y	1824	EPA 201	EPA 202p	252	1.01	1.20	2.21		2.21	0.001213		0.001213
39	2	Sutter Energy	2	6/19/03	S/W 501F	185 MW	N	Y	Y	Y	1836	EPA 201	EPA 202p	252	1.17	0.00	1.17		1.17	0.000640		0.000640
39	3	Sutter Energy	2	6/19/03	S/W 501F	185 MW	N	Y	Y	Y	1824	EPA 201	EPA 202p	252	0.08	1.50	1.59		1.59	0.000870		0.000870
38	1	Sutter Energy	1	6/15/04	S/W 501F	185 MW	N	Y	Y	Y	1782	EPA 201	EPA 202p	260	0.62	2.26	2.88		2.88	0.001616		0.001616
38	2	Sutter Energy	1	6/16/04	S/W 501F	185 MW	N	Y	Y	Y	1865	EPA 201	EPA 202p	260	1.00	2.46	3.46		3.46	0.001855		0.001855

Gas Turbine PM Test Result Summary - Gas Fired Units - Calpine California F-Class Turbines - All Methods

Unit ID	Test ID	Project Name	Unit Name	Test Date	Turbine	Nominal Rating	H2O	DLN	SCR	Ox Cat	Heat Input (MMbtu/hr) HHV	F/H Method	B/H Method	Sampling Time (min)	F/H (lbs/hr)	B/H (lbs/hr)	Total PM10 All (lbs/hr)	Total PM10 Outliers (lbs/hr)	Total PM10 Excluding Outliers (lbs/hr)	Emissions Rate All (lbs/MMBtu)	Emissions Rate Outliers (lbs/MMBtu)	Emissions Rate Excluding Outliers (lbs/MMBtu)
38	3	Sutter Energy	1	6/16/04	S/W 501F	185 MW	N	Y	Y	Y	1868	EPA 201	EPA 202p	257	0.73	1.22	1.95		1.95	0.001044		0.001044
39	4	Sutter Energy	2	6/17/04	S/W 501F	185 MW	N	Y	Y	Y	1878	EPA 201	EPA 202p	266	1.67	2.02	3.69		3.69	0.001965		0.001965
39	5	Sutter Energy	2	6/17/04	S/W 501F	185 MW	N	Y	Y	Y	1885	EPA 201	EPA 202p	269	1.10	1.38	2.48		2.48	0.001316		0.001316
39	6	Sutter Energy	2	6/18/04	S/W 501F	185 MW	N	Y	Y	Y	1876	EPA 201	EPA 202p	253	0.77	1.79	2.56		2.56	0.001365		0.001365
40	1	Los Medanos	1	9/23/02	GE 7FA	185 MW	N	Y	Y	Y	1935	EPA 201	EPA 202p	261	0.19	0.40	0.59		0.59	0.000302		0.000302
40	2	Los Medanos	1	9/24/02	GE 7FA	185 MW	N	Y	Y	Y	1933	EPA 201	EPA 202p	256	0.25	1.83	2.08		2.08	0.001077		0.001077
40	3	Los Medanos	1	9/25/02	GE 7FA	185 MW	N	Y	Y	Y	*1934*	EPA 201	EPA 202p	257	0.00	2.93	2.93		2.93	0.001516		0.001516
40	4	Los Medanos	2	9/26/02	GE 7FA	185 MW	N	Y	Y	Y	1935	EPA 201	EPA 202p	269	0.00	1.60	1.60		1.60	0.000824		0.000824
40	5	Los Medanos	2	9/27/02	GE 7FA	185 MW	N	Y	Y	Y	1944	EPA 201	EPA 202p	250	0.12	0.65	0.77		0.77	0.000395		0.000395
40	6	Los Medanos	2	9/27/02	GE 7FA	185 MW	N	Y	Y	Y	1940	EPA 201	EPA 202p	247	0.65	0.74	1.39		1.39	0.000719		0.000719
40	1	Los Medanos	1	9/16/03	GE 7FA	185 MW	N	Y	Y	Y	1899	EPA 201	EPA 202p	240	0.00	1.82	1.82		1.82	0.000957		0.000957
40	2	Los Medanos	1	9/17/03	GE 7FA	185 MW	N	Y	Y	Y	1980	EPA 201	EPA 202p	240	0.00	1.30	1.30		1.30	0.000655		0.000655
40	3	Los Medanos	1	9/17/03	GE 7FA	185 MW	N	Y	Y	Y	1949	EPA 201	EPA 202p	240	0.06	0.48	0.54		0.54	0.000276		0.000276
40	4	Los Medanos	2	9/18/03	GE 7FA	185 MW	N	Y	Y	Y	1991	EPA 201	EPA 202p	240	0.35	2.69	3.04		3.04	0.001527		0.001527
40	5	Los Medanos	2	9/19/03	GE 7FA	185 MW	N	Y	Y	Y	2012	EPA 201	EPA 202p	240	0.55	1.13	1.68		1.68	0.000835		0.000835
40	6	Los Medanos	2	9/19/03	GE 7FA	185 MW	N	Y	Y	Y	1993	EPA 201	EPA 202p	240	0.41	1.57	1.99		1.99	0.000998		0.000998
56	1	Delta Energy	1	6/2/03	S/W 501F	185 MW	N	Y	Y	N	2026	EPA 201	EPA 202p	240	0.00	3.30	3.30		3.30	0.001631		0.001631
56	2	Delta Energy	1	6/3/03	S/W 501F	185 MW	N	Y	Y	N	2004	EPA 201	EPA 202p	240	0.00	3.71	3.71		3.71	0.001849		0.001849
56	3	Delta Energy	1	6/3/03	S/W 501F	185 MW	N	Y	Y	N	2027	EPA 201	EPA 202p	240	0.11	2.13	2.24		2.24	0.001104		0.001104
57	1	Delta Energy	2	7/8/03	S/W 501F	185 MW	N	Y	Y	N	1974	EPA 201	EPA 202p	240	2.54	2.54	5.07		5.07	0.002569		0.002569
57	2	Delta Energy	2	7/8/03	S/W 501F	185 MW	N	Y	Y	N	2012	EPA 201	EPA 202p	240	2.57	3.55	6.12		6.12	0.003041		0.003041
57	3	Delta Energy	2	7/9/03	S/W 501F	185 MW	N	Y	Y	N	1972	EPA 201	EPA 202p	240	2.01	2.51	4.52		4.52	0.002290		0.002290
58	1	Delta Energy	3	6/4/03	S/W 501F	185 MW	N	Y	Y	N	2041	EPA 201	EPA 202p	241	0.00	2.66	2.66		2.66	0.001304		0.001304
58	2	Delta Energy	3	7/10/03	S/W 501F	185 MW	N	Y	Y	N	2026	EPA 201	EPA 202p	240	2.36	3.13	5.49		5.49	0.002709		0.002709
58	3	Delta Energy	3	7/10/03	S/W 501F	185 MW	N	Y	Y	N	2031	EPA 201	EPA 202p	241	0.73	3.14	3.88		3.88	0.001909		0.001909

	Total PM10 (F/H + B/H) Mean (lb/hr)	Standard Deviation (lb/hr)	Standard Deviation (%)	Heat Input (MMbtu/hr) HHV	Emissions Rate (lbs/MMBtu)	Number of Tests
Overall	5.02	5.96	119%	1,918	0.00268	90
Outliers Only	28.41				0.01591	4
Overall, Excluding Outliers	3.93	3.15	80%	1,924	0.00207	86
Outlier "n" Standard Deviations	3					
Outlier Limit	22.91					

3.1-4 Detailed Gas Turbine PM_{10} Emission Information

APPENDIX A.4

DETAILED GAS TURBINE PM_{10} EMISSION INFORMATION

Calpine and Sierra Research Assessment of PM_{10} Emission Rate for Inland Empire Energy Center

A total of 90 PM tests were performed on seven F-class combustion turbines located at three Calpine facilities in California: the Sutter Energy Center, in the Feather River AQMD; and the Los Medanos and Delta Energy Centers located in the Bay Area AQMD. These tests were performed between 2001 and 2004 in accordance with protocols that were reviewed by the governing APCDs. Of these 90 tests, four were identified as outliers. All of the outliers were from tests performed in June 2002 at the Sutter Energy Center. Tests of the same units before and after the outlier tests demonstrated emission rates substantially below the outlier results.

The average emission rates measured during these tests were as follows:

All tests:	0.00268 lbs/MMbtu	(90 tests)
Outlier tests:	0.01591 lbs/MMbtu	(4 tests)
Non-outlier tests:	0.00207 lbs/MMbtu	(86 tests)

Although all of the tests were performed using test methods that were approved by the governing air districts, in 2002 the US EPA rejected the use of one of the test methods (EPA Method 8) for the determination of back-half particulates from gas-fired combustion equipment. Since Method 8 has not been approved by the SCAQMD for this purpose either, a second analysis was performed looking at a subset of the test results. This subset includes measurements based on the use of SCAQMD-approved Methods 201a/202. A total of 45 tests were performed using these methods; these tests include the four outliers referenced above. The average emission rates measured during the 45 tests were as follows:

All tests:	0.00334 lbs/MMbtu	(45 tests)
Outlier tests:	0.01591 lbs/MMbtu	(4 tests)
Non-outlier tests:	0.00211 lbs/MMbtu	(41 tests)

When the outlier results are excluded, the results obtained using Methods 201a/202 were not significantly different for these tests as compared with those from the complete data set.

The maximum hourly heat input rate for the combustion turbines proposed for the Inland Empire Energy Center is 2597 MMbtu/hr. The expected PM10 emission rate associated with this firing rate is 5.5 lbs/hr (2,597 MMBtu/hr * 0.00211 lbs/MMBtu), based on the assumption that the F-class turbine test results can be extrapolated to the larger turbine on the basis of heat input rate. (The average heat input rate for the 41 non-outlier tests was 1,923 MMbtu/hr. It is believed that an extrapolation based on heat input rate is reasonable between the F-class heat input rate and H-class heat input rate.)

Calpine's experience with PM10 testing strongly suggests that variability is reduced when the test crews have experience with the methods. This is shown by looking at the emission rates by calendar year (Method 201a/202 results only):

2002, non-outlier tests:	0.00355 lbs/MMbtu
2003, non-outlier tests:	0.00133 lbs/MMbtu
2004, non-outlier tests:	0.00153 lbs/MMbtu

Although no specific changes to testing procedures were established by Calpine after the 2002 tests, the experience gained with the variability observed in 2002 enabled the two test firms principally used by Calpine to further refine their quality control techniques. Assuming the average of the 2003/2004 values, 0.00143 lbs/MMbtu, this is equivalent to an expected PM10 emissions rate of 3.7 lbs/hr at the maximum rated heat input for the H-class turbine.

The 2002 to 2004 data for the Method 201a/202 results indicate that the standard deviation of the test results is approximately 110% of the mean value. Looking at the variability year-by-year, however, the relative standard deviation declined from 98% in 2002 to 63% in 2003, and again to 23% in 2004.

Assuming that the standard deviation is 43% of the mean for repeated tests performed on the same engine (the average of the 2003 and 2004 values), the mean plus three standard deviation emission rate for the H-class turbine would be (3.7 + 3 * (0.43 * 3.7)) = 8.5 lbs/hr. This was rounded up to10 lbs/hr to provide an additional margin of safety.

Gas Turbine PM Test Result Summary - Gas Fired Units - Calpine California F-Class Turbines - Methods 201/202

Unit ID	Test ID	Project Name	Unit Name	Test Date	Turbine	Nominal Rating	H2O	DLN	SCR	Ox Cat	Heat Input (MMbtu/hr) HHV	F/H Method	B/H Method	Sampling Time (min)	F/H (lbs/hr)	B/H (lbs/hr)	Total PM10 All (lbs/hr)	Total PM10 Outliers (lbs/hr)	Total PM10 Excluding Outliers (lbs/hr)	Emissions Rate All (lbs/MMBtu)	Emissions Rate Outliers (lbs/MMBtu)	Emissions Rate Excluding Outliers (lbs/MMBtu)
38	4	Sutter Energy	1	6/20/02	S/W 501F	185 MW	N	Y	Y	Y	1807	EPA 201	EPA 202p	275	8.36	22.10	30.47	30.47		0.016862	0.016862	
38	5	Sutter Energy	1	6/21/02	S/W 501F	185 MW	N	Y	Y	Y	1802	EPA 201	EPA 202p	228	4.16	20.14	24.29	24.29		0.013481	0.013481	
38	6	Sutter Energy	1	6/24/02	S/W 501F	185 MW	N	Y	Y	Y	1796	EPA 201	EPA 202p	269	7.42	23.72	31.13	31.13		0.017335	0.017335	
38	1	Sutter Energy	1	10/6/02	S/W 501F	185 MW	N	Y	Y	Y	2036	EPA 201	EPA 202p	265	3.79	5.49	9.28		9.28	0.004557		0.004557
38	2	Sutter Energy	1	10/7/02	S/W 501F	185 MW	N	Y	Y	Y	1839	EPA 201	EPA 202p	186	10.03	3.46	13.48		13.48	0.007330		0.007330
38	3	Sutter Energy	1	10/7/02	S/W 501F	185 MW	N	Y	Y	Y	1832	EPA 201	EPA 202p	259	2.73	2.67	5.40		5.40	0.002948		0.002948
39	4	Sutter Energy	2	6/27/02	S/W 501F	185 MW	N	Y	Y	Y	1738	EPA 201	EPA 202p	162	5.97	21.76	27.74	27.74		0.015957	0.015957	
39	5	Sutter Energy	2	6/28/02	S/W 501F	185 MW	N	Y	Y	Y	1793	EPA 201	EPA 202p	270	4.87	16.37	21.24		21.24	0.011847		0.011847
39	6	Sutter Energy	2	6/28/02	S/W 501F	185 MW	N	Y	Y	Y	1812	EPA 201	EPA 202p	272	4.95	12.05	17.00		17.00	0.009382		0.009382
39	1	Sutter Energy	2	10/8/02	S/W 501F	185 MW	N	Y	Y	Y	1881	EPA 201	EPA 202p	272	2.81	3.35	6.17		6.17	0.003279		0.003279
39	2	Sutter Energy	2	10/9/02	S/W 501F	185 MW	N	Y	Y	Y	1941	EPA 201	EPA 202p	244	3.21	2.89	6.10		6.10	0.003141		0.003141
39	3	Sutter Energy	2	10/9/02	S/W 501F	185 MW	N	Y	Y	Y	1830	EPA 201	EPA 202p	256	1.29	2.97	4.25		4.25	0.002325		0.002325
38	1	Sutter Energy	1	6/16/03	S/W 501F	185 MW	N	Y	Y	Y	1856	EPA 201	EPA 202p	252	0.24	0.10	0.34		0.34	0.000180		0.000180
38	2	Sutter Energy	1	6/17/03	S/W 501F	185 MW	N	Y	Y	Y	1910	EPA 201	EPA 202p	245	0.33	0.35	0.68		0.68	0.000357		0.000357
38	3	Sutter Energy	1	6/17/03	S/W 501F	185 MW	N	Y	Y	Y	1912	EPA 201	EPA 202p	245	0.50	1.29	1.79		1.79	0.000936		0.000936
39	1	Sutter Energy	2	6/18/03	S/W 501F	185 MW	N	Y	Y	Y	1824	EPA 201	EPA 202p	252	1.01	1.20	2.21		2.21	0.001213		0.001213
39	2	Sutter Energy	2	6/19/03	S/W 501F	185 MW	N	Y	Y	Y	1836	EPA 201	EPA 202p	252	1.17	0.00	1.17		1.17	0.000640		0.000640
39	3	Sutter Energy	2	6/19/03	S/W 501F	185 MW	N	Y	Y	Y	1824	EPA 201	EPA 202p	252	0.08	1.50	1.59		1.59	0.000870		0.000870
38	1	Sutter Energy	1	6/15/04	S/W 501F	185 MW	N	Y	Y	Y	1782	EPA 201	EPA 202p	260	0.62	2.26	2.88		2.88	0.001616		0.001616
38	2	Sutter Energy	1	6/16/04	S/W 501F	185 MW	N	Y	Y	Y	1865	EPA 201	EPA 202p	260	1.00	2.46	3.46		3.46	0.001855		0.001855
38	3	Sutter Energy	1	6/16/04	S/W 501F	185 MW	N	Y	Y	Y	1868	EPA 201	EPA 202p	257	0.73	1.22	1.95		1.95	0.001044		0.001044
39	4	Sutter Energy	2	6/17/04	S/W 501F	185 MW	N	Y	Y	Y	1878	EPA 201	EPA 202p	266	1.67	2.02	3.69		3.69	0.001965		0.001965
39	5	Sutter Energy	2	6/17/04	S/W 501F	185 MW	N	Y	Y	Y	1885	EPA 201	EPA 202p	269	1.10	1.38	2.48		2.48	0.001316		0.001316
39	6	Sutter Energy	2	6/18/04	S/W 501F	185 MW	N	Y	Y	Y	1876	EPA 201	EPA 202p	253	0.77	1.79	2.56		2.56	0.001365		0.001365
40	1	Los Medanos	1	9/23/02	GE 7FA	185 MW	N	Y	Y	Y	1935	EPA 201	EPA 202p	261	0.19	0.40	0.59		0.59	0.000302		0.000302
40	2	Los Medanos	1	9/24/02	GE 7FA	185 MW	N	Y	Y	Y	1933	EPA 201	EPA 202p	256	0.25	1.83	2.08		2.08	0.001077		0.001077
40	3	Los Medanos	1	9/25/02	GE 7FA	185 MW	N	Y	Y	Y	*1934*	EPA 201	EPA 202p	257	0.00	2.93	2.93		2.93	0.001516		0.001516
40	4	Los Medanos	2	9/26/02	GE 7FA	185 MW	N	Y	Y	Y	1935	EPA 201	EPA 202p	269	0.00	1.60	1.60		1.60	0.000824		0.000824
40	5	Los Medanos	2	9/27/02	GE 7FA	185 MW	N	Y	Y	Y	1944	EPA 201	EPA 202p	250	0.12	0.65	0.77		0.77	0.000395		0.000395
40	6	Los Medanos	2	9/27/02	GE 7FA	185 MW	N	Y	Y	Y	1940	EPA 201	EPA 202p	247	0.65	0.74	1.39		1.39	0.000719		0.000719
40	1	Los Medanos	1	9/16/03	GE 7FA	185 MW	N	Y	Y	Y	1899	EPA 201	EPA 202p	240	0.00	1.82	1.82		1.82	0.000957		0.000957
40	2	Los Medanos	1	9/17/03	GE 7FA	185 MW	N	Y	Y	Y	1980	EPA 201	EPA 202p	240	0.00	1.30	1.30		1.30	0.000655		0.000655
40	3	Los Medanos	1	9/17/03	GE 7FA	185 MW	N	Y	Y	Y	1949	EPA 201	EPA 202p	240	0.06	0.48	0.54		0.54	0.000276		0.000276
40	4	Los Medanos	2	9/18/03	GE 7FA	185 MW	N	Y	Y	Y	1991	EPA 201	EPA 202p	240	0.35	2.69	3.04		3.04	0.001527		0.001527
40	5	Los Medanos	2	9/19/03	GE 7FA	185 MW	N	Y	Y	Y	2012	EPA 201	EPA 202p	240	0.55	1.13	1.68		1.68	0.000835		0.000835
40	6	Los Medanos	2	9/19/03	GE 7FA	185 MW	N	Y	Y	Y	1993	EPA 201	EPA 202p	240	0.41	1.57	1.99		1.99	0.000998		0.000998
56	1	Delta Energy	1	6/2/03	S/W 501F	185 MW	N	Y	Y	N	2026	EPA 201	EPA 202p	240	0.00	3.30	3.30		3.30	0.001631		0.001631
56	2	Delta Energy	1	6/3/03	S/W 501F	185 MW	N	Y	Y	N	2004	EPA 201	EPA 202p	240	0.00	3.71	3.71		3.71	0.001849		0.001849
56	3	Delta Energy	1	6/3/03	S/W 501F	185 MW	N	Y	Y	N	2027	EPA 201	EPA 202p	240	0.11	2.13	2.24		2.24	0.001104		0.001104
57	1	Delta Energy	2	7/8/03	S/W 501F	185 MW	N	Y	Y	N	1974	EPA 201	EPA 202p	240	2.54	2.54	5.07		5.07	0.002569		0.002569
57	2	Delta Energy	2	7/8/03	S/W 501F	185 MW	N	Y	Y	N	2012	EPA 201	EPA 202p	240	2.57	3.55	6.12		6.12	0.003041		0.003041
57	3	Delta Energy	2	7/9/03	S/W 501F	185 MW	N	Y	Y	N	1972	EPA 201	EPA 202p	240	2.01	2.51	4.52		4.52	0.002290		0.002290
58	1	Delta Energy	3	6/4/03	S/W 501F	185 MW	N	Y	Y	N	2041	EPA 201	EPA 202p	241	0.00	2.66	2.66		2.66	0.001304		0.001304
58	2	Delta Energy	3	7/10/03	S/W 501F	185 MW	N	Y	Y	N	2026	EPA 201	EPA 202p	240	2.36	3.13	5.49		5.49	0.002709		0.002709
58	3	Delta Energy	3	7/10/03	S/W 501F	185 MW	N	Y	Y	N	2031	EPA 201	EPA 202p	241	0.73	3.14	3.88		3.88	0.001909		0.001909

	Total PM10 (F/H + B/H) Mean (lb/hr)	Standard Deviation (lb/hr)	Standard Deviation (%)	Heat Input (MMbtu/hr) HHV	Emissions Rate (lbs/MMBtu)	Number of Tests
Overall	6.18	8.17	132%	1,911	0.00334	45
Outliers Only	28.41				0.01591	4
Overall, Excluding Outliers	4.01	4.30	107%	1,923	0.00211	41
2002 Only, Excluding Outliers	6.59	6.45	98%	1,899	0.00355	14
2003 Only, Excluding Outliers	2.62	1.65	63%	1,957	0.00133	21
2004 Only, Excluding Outliers	2.84	0.65	23%	1,859	0.00153	6
2003/2004 Average			43%		0.00143	
H-Class Unit	3.70	1.59	43%	2,597	0.00143	
Outlier "n" Standard Deviations	2					
Outlier Limit	22.52					

Gas Turbine PM Test Result Summary - Gas Fired Units - Calpine California F-Class Turbines - All Methods

Unit ID	Test ID	Project Name	Unit Name	Test Date	Turbine	Nominal Rating	H2O	DLN	SCR	Ox Cat	Heat Input (MMbtu/hr) HHV	F/H Method	B/H Method	Sampling Time (min)	F/H (lbs/hr)	B/H (lbs/hr)	Total PM10 All (lbs/hr)	Total PM10 Outliers (lbs/hr)	Total PM10 Excluding Outliers (lbs/hr)	Emissions Rate All (lbs/MMBtu)	Emissions Rate Outliers (lbs/MMBtu)	Emissions Rate Excluding Outliers (lbs/MMBtu)
38	1	Sutter Energy	1	6/25/01	S/W 501F	185 MW	N	Y	Y	Y	1767	EPA 201	EPA 8	265	1.40	1.36	2.76		2.76	0.001563		0.001563
38	2	Sutter Energy	1	6/26/01	S/W 501F	185 MW	N	Y	Y	Y	1861	EPA 201	EPA 8	266	0.97	1.50	2.47		2.47	0.001325		0.001325
38	3	Sutter Energy	1	6/26/01	S/W 501F	185 MW	N	Y	Y	Y	1885	EPA 201	EPA 8	254	0.91	2.47	3.38		3.38	0.001794		0.001794
38	4	Sutter Energy	1	1/8/02	S/W 501F	185 MW	N	Y	Y	Y	1908	EPA 201	EPA 8	252	1.75	2.62	4.37		4.37	0.002290		0.002290
38	5	Sutter Energy	1	1/9/02	S/W 501F	185 MW	N	Y	Y	Y	1917	EPA 201	EPA 8	252	1.04	2.83	3.87		3.87	0.002019		0.002019
38	6	Sutter Energy	1	1/9/02	S/W 501F	185 MW	N	Y	Y	Y	1915	EPA 201	EPA 8	248	1.35	2.48	3.83		3.83	0.002000		0.002000
38	4	Sutter Energy	1	1/10/02	S/W 501F	185 MW	N	Y	Y	Y	2030	EPA 201	EPA 8	248	0.01	2.02	2.03		2.03	0.001000		0.001000
38	5	Sutter Energy	1	1/11/02	S/W 501F	185 MW	N	Y	Y	Y	2032	EPA 201	EPA 8	252	1.14	2.99	4.13		4.13	0.002032		0.002032
38	6	Sutter Energy	1	1/11/02	S/W 501F	185 MW	N	Y	Y	Y	2015	EPA 201	EPA 8	251	0.00	2.32	2.32		2.32	0.001151		0.001151
38	4	Sutter Energy	1	6/20/02	S/W 501F	185 MW	N	Y	Y	Y	1807	EPA 201	EPA 202p	275	8.36	22.10	30.47	30.47		0.016862	0.016862	
38	4	Sutter Energy	1	6/20/02	S/W 501F	185 MW	N	Y	Y	Y	1807	EPA 5	EPA 8	275	3.55	3.84	7.39		7.39	0.004090		0.004090
38	5	Sutter Energy	1	6/21/02	S/W 501F	185 MW	N	Y	Y	Y	1802	EPA 201	EPA 202p	228	4.16	20.14	24.29	24.29		0.013481	0.013481	
38	5	Sutter Energy	1	6/21/02	S/W 501F	185 MW	N	Y	Y	Y	1802	EPA 5	EPA 8	228	1.54	3.07	4.61		4.61	0.002558		0.002558
38	6	Sutter Energy	1	6/24/02	S/W 501F	185 MW	N	Y	Y	Y	1796	EPA 201	EPA 202p	269	7.42	23.72	31.13	31.13		0.017335	0.017335	
38	6	Sutter Energy	1	6/24/02	S/W 501F	185 MW	N	Y	Y	Y	1796	EPA 5	EPA 8	269	2.87	2.83	5.70		5.70	0.003174		0.003174
38	1	Sutter Energy	1	10/6/02	S/W 501F	185 MW	N	Y	Y	Y	2036	EPA 201	EPA 202p	265	3.79	5.49	9.28		9.28	0.004557		0.004557
38	1	Sutter Energy	1	10/6/02	S/W 501F	185 MW	N	Y	Y	Y	1796	EPA 5	EPA 8	265	2.45	1.92	4.37		4.37	0.002433		0.002433
38	2	Sutter Energy	1	10/7/02	S/W 501F	185 MW	N	Y	Y	Y	1839	EPA 201	EPA 202p	186	10.03	3.46	13.48		13.48	0.007330		0.007330
38	2	Sutter Energy	1	10/7/02	S/W 501F	185 MW	N	Y	Y	Y	2036	EPA 5	EPA 8	186	3.06	1.33	4.39		4.39	0.002157		0.002157
38	3	Sutter Energy	1	10/7/02	S/W 501F	185 MW	N	Y	Y	Y	1832	EPA 201	EPA 202p	259	2.73	2.67	5.40		5.40	0.002948		0.002948
38	3	Sutter Energy	1	10/7/02	S/W 501F	185 MW	N	Y	Y	Y	1839	EPA 5	EPA 8	259	3.33	1.57	4.90		4.90	0.002664		0.002664
39	1	Sutter Energy	2	6/27/01	S/W 501F	185 MW	N	Y	Y	Y	1894	EPA 201	EPA 8	258	0.76	2.98	3.75		3.75	0.001979		0.001979
39	2	Sutter Energy	2	6/28/01	S/W 501F	185 MW	N	Y	Y	Y	1888	EPA 201	EPA 8	258	0.51	0.99	1.51		1.51	0.000799		0.000799
39	3	Sutter Energy	2	6/28/01	S/W 501F	185 MW	N	Y	Y	Y	1864	EPA 201	EPA 8	258	0.51	1.34	1.85		1.85	0.000995		0.000995
39	4	Sutter Energy	2	1/30/02	S/W 501F	185 MW	N	Y	Y	Y	1844	EPA 201	EPA 8	249	6.54	1.42	7.96		7.96	0.004317		0.004317
39	5	Sutter Energy	2	1/31/02	S/W 501F	185 MW	N	Y	Y	Y	1851	EPA 201	EPA 8	260	5.46	1.21	6.67		6.67	0.003603		0.003603
39	6	Sutter Energy	2	2/1/02	S/W 501F	185 MW	N	Y	Y	Y	1850	EPA 201	EPA 8	249	3.03	2.55	5.58		5.58	0.003016		0.003016
39	4	Sutter Energy	2	2/2/02	S/W 501F	185 MW	N	Y	Y	Y	1980	EPA 201	EPA 8	240	2.90	2.18	5.08		5.08	0.002565		0.002565
39	5	Sutter Energy	2	2/2/02	S/W 501F	185 MW	N	Y	Y	Y	1987	EPA 201	EPA 8	256	2.62	0.63	3.25		3.25	0.001635		0.001635
39	6	Sutter Energy	2	2/3/02	S/W 501F	185 MW	N	Y	Y	Y	2023	EPA 201	EPA 8	247	2.00	1.34	3.34		3.34	0.001651		0.001651
39	4	Sutter Energy	2	6/27/02	S/W 501F	185 MW	N	Y	Y	Y	1738	EPA 201	EPA 202p	162	5.97	21.76	27.74	27.74		0.015957	0.015957	
39	4	Sutter Energy	2	6/27/02	S/W 501F	185 MW	N	Y	Y	Y	1738	EPA 5	EPA 8	162	3.11	2.70	5.81		5.81	0.003343		0.003343
39	5	Sutter Energy	2	6/28/02	S/W 501F	185 MW	N	Y	Y	Y	1793	EPA 201	EPA 202p	270	4.87	16.37	21.24		21.24	0.011847		0.011847
39	5	Sutter Energy	2	6/28/02	S/W 501F	185 MW	N	Y	Y	Y	1793	EPA 5	EPA 8	270	1.53	2.31	3.84		3.84	0.002142		0.002142
39	6	Sutter Energy	2	6/28/02	S/W 501F	185 MW	N	Y	Y	Y	1812	EPA 201	EPA 202p	272	4.95	12.05	17.00		17.00	0.009382		0.009382
39	6	Sutter Energy	2	6/28/02	S/W 501F	185 MW	N	Y	Y	Y	1812	EPA 5	EPA 8	272	1.25	2.57	3.82		3.82	0.002109		0.002109
39	1	Sutter Energy	2	10/8/02	S/W 501F	185 MW	N	Y	Y	Y	1881	EPA 201	EPA 202p	272	2.81	3.35	6.17		6.17	0.003279		0.003279
39	1	Sutter Energy	2	10/8/02	S/W 501F	185 MW	N	Y	Y	Y	1812	EPA 5	EPA 8	272	0.99	1.45	2.44		2.44	0.001347		0.001347
39	2	Sutter Energy	2	10/9/02	S/W 501F	185 MW	N	Y	Y	Y	1941	EPA 201	EPA 202p	244	3.21	2.89	6.10		6.10	0.003141		0.003141
39	2	Sutter Energy	2	10/9/02	S/W 501F	185 MW	N	Y	Y	Y	1881	EPA 5	EPA 8	244	2.24	1.07	3.31		3.31	0.001760		0.001760
39	3	Sutter Energy	2	10/9/02	S/W 501F	185 MW	N	Y	Y	Y	1830	EPA 201	EPA 202p	256	1.29	2.97	4.25		4.25	0.002325		0.002325
39	3	Sutter Energy	2	10/9/02	S/W 501F	185 MW	N	Y	Y	Y	1941	EPA 5	EPA 8	256	2.22	1.09	3.31		3.31	0.001705		0.001705
40	1	Los Medanos	1	8/19/01	GE 7FA	185 MW	N	Y	Y	Y	1845	EPA 201	EPA 8	280	1.75	4.35	6.10		6.10	0.003306		0.003306
40	2	Los Medanos	1	8/19/01	GE 7FA	185 MW	N	Y	Y	Y	1889	EPA 201	EPA 8	279	0.82	2.84	3.66		3.66	0.001938		0.001938
40	3	Los Medanos	1	8/19/01	GE 7FA	185 MW	N	Y	Y	Y	1865	EPA 201	EPA 8	248	1.29	1.97	3.26		3.26	0.001748		0.001748
41	1	Los Medanos	2	8/19/01	GE 7FA	185 MW	N	Y	Y	Y	1844	EPA 201	EPA 8	251	0.86	3.10	3.96		3.96	0.002147		0.002147
41	2	Los Medanos	2	8/19/01	GE 7FA	185 MW	N	Y	Y	Y	1886	EPA 201	EPA 8	249	0.66	1.75	2.41		2.41	0.001278		0.001278
41	3	Los Medanos	2	8/19/01	GE 7FA	185 MW	N	Y	Y	Y	1940	EPA 201	EPA 8	252	1.07	1.08	2.15		2.15	0.001108		0.001108
56	1	Delta Energy	1	4/20/02	S/W 501F	185 MW	N	Y	Y	N	2049	EPA 201	EPA 8	240	0.82	4.53	5.35		5.35	0.002611		0.002611
56	2	Delta Energy	1	4/20/02	S/W 501F	185 MW	N	Y	Y	N	2114	EPA 201	EPA 8	240	1.10	4.83	5.94		5.94	0.002810		0.002810
56	3	Delta Energy	1	4/21/02	S/W 501F	185 MW	N	Y	Y	N	2094	EPA 201	EPA 8	240	1.20	3.71	4.91		4.91	0.002345		0.002345
57	1	Delta Energy	2	4/21/02	S/W 501F	185 MW	N	Y	Y	N	2098	EPA 201	EPA 8	240	0.80	1.11	1.91		1.91	0.000909		0.000909
57	2	Delta Energy	2	4/21/02	S/W 501F	185 MW	N	Y	Y	N	2044	EPA 201	EPA 8	240	0.60	2.45	3.04		3.04	0.001490		0.001490
57	3	Delta Energy	2	4/22/02	S/W 501F	185 MW	N	Y	Y	N	2040	EPA 201	EPA 8	240	0.84	1.32	2.16		2.16	0.001058		0.001058
58	1	Delta Energy	3	4/26/02	S/W 501F	185 MW	N	Y	Y	N	2122	EPA 201	EPA 8	240	0.89	1.62	2.51		2.51	0.001183		0.001183
58	2	Delta Energy	3	4/26/02	S/W 501F	185 MW	N	Y	Y	N	2117	EPA 201	EPA 8	240	0.54	1.92	2.46		2.46	0.001162		0.001162
58	3	Delta Energy	3	4/26/02	S/W 501F	185 MW	N	Y	Y	N	2095	EPA 201	EPA 8	240	0.43	1.68	2.12		2.12	0.001011		0.001011
38	1	Sutter Energy	1	6/16/03	S/W 501F	185 MW	N	Y	Y	Y	1856	EPA 201	EPA 202p	252	0.24	0.10	0.34		0.34	0.000180		0.000180
38	2	Sutter Energy	1	6/17/03	S/W 501F	185 MW	N	Y	Y	Y	1910	EPA 201	EPA 202p	245	0.33	0.35	0.68		0.68	0.000357		0.000357
38	3	Sutter Energy	1	6/17/03	S/W 501F	185 MW	N	Y	Y	Y	1912	EPA 201	EPA 202p	245	0.50	1.29	1.79		1.79	0.000936		0.000936
39	1	Sutter Energy	2	6/18/03	S/W 501F	185 MW	N	Y	Y	Y	1824	EPA 201	EPA 202p	252	1.01	1.20	2.21		2.21	0.001213		0.001213
39	2	Sutter Energy	2	6/19/03	S/W 501F	185 MW	N	Y	Y	Y	1836	EPA 201	EPA 202p	252	1.17	0.00	1.17		1.17	0.000640		0.000640
39	3	Sutter Energy	2	6/19/03	S/W 501F	185 MW	N	Y	Y	Y	1824	EPA 201	EPA 202p	252	0.08	1.50	1.59		1.59	0.000870		0.000870
38	1	Sutter Energy	1	6/15/04	S/W 501F	185 MW	N	Y	Y	Y	1782	EPA 201	EPA 202p	260	0.62	2.26	2.88		2.88	0.001616		0.001616
38	2	Sutter Energy	1	6/16/04	S/W 501F	185 MW	N	Y	Y	Y	1865	EPA 201	EPA 202p	260	1.00	2.46	3.46		3.46	0.001855		0.001855

Gas Turbine PM Test Result Summary - Gas Fired Units - Calpine California F-Class Turbines - All Methods

Unit ID	Test ID	Project Name	Unit Name	Test Date	Turbine	Nominal Rating	H2O	DLN	SCR	Ox Cat	Heat Input (MMbtu/hr) HHV	F/H Method	B/H Method	Sampling Time (min)	F/H (lbs/hr)	B/H (lbs/hr)	Total PM10 All (lbs/hr)	Total PM10 Outliers (lbs/hr)	Total PM10 Excluding Outliers (lbs/hr)	Emissions Rate All (lbs/MMBtu)	Emissions Rate Outliers (lbs/MMBtu)	Emissions Rate Excluding Outliers (lbs/MMBtu)
38	3	Sutter Energy	1	6/16/04	S/W 501F	185 MW	N	Y	Y	Y	1868	EPA 201	EPA 202p	257	0.73	1.22	1.95		1.95	0.001044		0.001044
39	4	Sutter Energy	2	6/17/04	S/W 501F	185 MW	N	Y	Y	Y	1878	EPA 201	EPA 202p	266	1.67	2.02	3.69		3.69	0.001965		0.001965
39	5	Sutter Energy	2	6/17/04	S/W 501F	185 MW	N	Y	Y	Y	1885	EPA 201	EPA 202p	269	1.10	1.38	2.48		2.48	0.001316		0.001316
39	6	Sutter Energy	2	6/18/04	S/W 501F	185 MW	N	Y	Y	Y	1876	EPA 201	EPA 202p	253	0.77	1.79	2.56		2.56	0.001365		0.001365
40	1	Los Medanos	1	9/23/02	GE 7FA	185 MW	N	Y	Y	Y	1935	EPA 201	EPA 202p	261	0.19	0.40	0.59		0.59	0.000302		0.000302
40	2	Los Medanos	1	9/24/02	GE 7FA	185 MW	N	Y	Y	Y	1933	EPA 201	EPA 202p	256	0.25	1.83	2.08		2.08	0.001077		0.001077
40	3	Los Medanos	1	9/25/02	GE 7FA	185 MW	N	Y	Y	Y	*1934*	EPA 201	EPA 202p	257	0.00	2.93	2.93		2.93	0.001516		0.001516
40	4	Los Medanos	2	9/26/02	GE 7FA	185 MW	N	Y	Y	Y	1935	EPA 201	EPA 202p	269	0.00	1.60	1.60		1.60	0.000824		0.000824
40	5	Los Medanos	2	9/27/02	GE 7FA	185 MW	N	Y	Y	Y	1944	EPA 201	EPA 202p	250	0.12	0.65	0.77		0.77	0.000395		0.000395
40	6	Los Medanos	2	9/27/02	GE 7FA	185 MW	N	Y	Y	Y	1940	EPA 201	EPA 202p	247	0.65	0.74	1.39		1.39	0.000719		0.000719
40	1	Los Medanos	1	9/16/03	GE 7FA	185 MW	N	Y	Y	Y	1899	EPA 201	EPA 202p	240	0.00	1.82	1.82		1.82	0.000957		0.000957
40	2	Los Medanos	1	9/17/03	GE 7FA	185 MW	N	Y	Y	Y	1980	EPA 201	EPA 202p	240	0.00	1.30	1.30		1.30	0.000655		0.000655
40	3	Los Medanos	1	9/17/03	GE 7FA	185 MW	N	Y	Y	Y	1949	EPA 201	EPA 202p	240	0.06	0.48	0.54		0.54	0.000276		0.000276
40	4	Los Medanos	2	9/18/03	GE 7FA	185 MW	N	Y	Y	Y	1991	EPA 201	EPA 202p	240	0.35	2.69	3.04		3.04	0.001527		0.001527
40	5	Los Medanos	2	9/19/03	GE 7FA	185 MW	N	Y	Y	Y	2012	EPA 201	EPA 202p	240	0.55	1.13	1.68		1.68	0.000835		0.000835
40	6	Los Medanos	2	9/19/03	GE 7FA	185 MW	N	Y	Y	Y	1993	EPA 201	EPA 202p	240	0.41	1.57	1.99		1.99	0.000998		0.000998
56	1	Delta Energy	1	6/2/03	S/W 501F	185 MW	N	Y	Y	N	2026	EPA 201	EPA 202p	240	0.00	3.30	3.30		3.30	0.001631		0.001631
56	2	Delta Energy	1	6/3/03	S/W 501F	185 MW	N	Y	Y	N	2004	EPA 201	EPA 202p	240	0.00	3.71	3.71		3.71	0.001849		0.001849
56	3	Delta Energy	1	6/3/03	S/W 501F	185 MW	N	Y	Y	N	2027	EPA 201	EPA 202p	240	0.11	2.13	2.24		2.24	0.001104		0.001104
57	1	Delta Energy	2	7/8/03	S/W 501F	185 MW	N	Y	Y	N	1974	EPA 201	EPA 202p	240	2.54	2.54	5.07		5.07	0.002569		0.002569
57	2	Delta Energy	2	7/8/03	S/W 501F	185 MW	N	Y	Y	N	2012	EPA 201	EPA 202p	240	2.57	3.55	6.12		6.12	0.003041		0.003041
57	3	Delta Energy	2	7/9/03	S/W 501F	185 MW	N	Y	Y	N	1972	EPA 201	EPA 202p	240	2.01	2.51	4.52		4.52	0.002290		0.002290
58	1	Delta Energy	3	6/4/03	S/W 501F	185 MW	N	Y	Y	N	2041	EPA 201	EPA 202p	241	0.00	2.66	2.66		2.66	0.001304		0.001304
58	2	Delta Energy	3	7/10/03	S/W 501F	185 MW	N	Y	Y	N	2026	EPA 201	EPA 202p	240	2.36	3.13	5.49		5.49	0.002709		0.002709
58	3	Delta Energy	3	7/10/03	S/W 501F	185 MW	N	Y	Y	N	2031	EPA 201	EPA 202p	241	0.73	3.14	3.88		3.88	0.001909		0.001909

	Total PM10 (F/H + B/H) Mean (lb/hr)	Standard Deviation (lb/hr)	Standard Deviation (%)	Heat Input (MMbtu/hr) HHV	Emissions Rate (lbs/MMBtu)	Number of Tests
Overall	5.02	5.96	119%	1,918	0.00268	90
Outliers Only	28.41				0.01591	4
Overall, Excluding Outliers	3.93	3.15	80%	1,924	0.00207	86
Outlier "n" Standard Deviations	3					
Outlier Limit	22.91					

Appendix 3.2 Biological Resources

Resumes of Biological Surveyors

Debra Crowe

John Cleckler

Debra Crowe

Debra J. Crowe
Environmental Scientist/Wildlife and Wetlands Biologist

Education

B.S., Environmental Biology and Management (Honors), University of California, Davis (1994)
Veterinary Technician Certification Program, Western Career College, Sacramento, California (1979)

Professional Registrations

Endangered Species Act (ESA) Section 10 Scientific Take Permit for California Threatened and Endangered Fairy Shrimp and Tadpole Shrimp (Permit #TE004824-0)
California Department of Fish and Game Scientific Collector's Permit
Certified Veterinary Technician

Distinguishing Qualifications

- Experienced in California Energy Commission power plant licensing procedures
- Expert witness for biological resource evaluations on power plant projects
- Experienced in Section 7 of ESA consultations and mitigation plans
- Expertise in biological resource construction mitigation monitoring
- Routinely consults with natural resource agencies on project permitting, mitigation measures, and construction monitoring

Relevant Experience

Ms. Crowe is a wildlife and wetlands biologist who analyzes potential project impacts on biological resources, including wetlands and threatened, endangered, or candidate species. She has 15 years experience in handling injured and diseased animals and is a member of the Sacramento Wildlife Care Association. She conducts wetland delineations, biological resource surveys, timber stand exams, and wetland creation/preservation monitoring. She has been an expert witness in several power plant licensing projects under the California Energy Commission regulations and prepared biological resource analyses, mitigation, monitoring, and resources management plans, and monitored construction and operations for compliance with Conditions of Certification. She prepares NEPA and CEQA documents for submittal to agencies.

She has 9 years of field experience in surveys and identification of wildlife and plants, wetland delineations, field sampling, vernal pool crustacean surveys, and threatened and endangered wildlife surveys in California, Alaska, Washington, Oregon, and Nevada. Ms. Crowe is experienced in Section 7 of the ESA consultations, Biological Assessments, and mitigation negotiations, as well as in fresh and salt marsh wetland delineations using U.S. Army Corps of Engineers methods and obtaining CWA Section 404 and 401 permits, Coastal Consistency Determinations, CDFG Consultations and Streambed Alteration Agreements. Her expertise

includes NEPA and CEQA regulations, procedures, and documentation production. She certified in identification of California fairy shrimp and tadpole shrimp to species and have a current ESA Section 10 permit. Ms. Crowe is familiar with California floristics, Atlas GIS, habitat modeling, environmental law, and report preparation and is certified in Hazardous Waste Operations and Emergency Response. Ms. Crowe also conducts soil and water sampling on hazardous waste sites and conducts groundwater and surface water sampling programs.

Environmental Impact Report/Environmental Impact Statement for Teayawa Energy Center, Calpine Corporation, Indio, California. Task Manager for threatened or endangered species consultations with U.S. Fish and Wildlife Service and California Department of Fish and Game. Performed threatened and endangered species surveys, literature search, and wildlife impact evaluation for proposed electric power plant, recycled water supply line, natural gas pipeline route, and electric transmission line connection. Consulted with local experts and USFWS/CDFG on potential impacts to desert species and habitat in the Coachella Valley. Prepared the Biological Assessment and mitigation plan and initiated consultations for sensitive biological resources.

Application for Certification (AFC) of Sutter Power Plant, Calpine Corporation, Yuba City, California. Task Manager for biological resource impact analysis and document section of AFC. Performed threatened and endangered species surveys, literature search, and wildlife impact evaluation for proposed electric power plant, natural gas pipeline route, and electric transmission line route. Conducted wet season and dry season surveys for listed vernal pool branchiopod species. Conducted wetland delineation, prepared wetland delineation report, biological assessment, and mitigation plans for U.S. Army Corps of Engineers, U.S. Environmental Protection Agency, U.S. Fish and Wildlife Service, California Department of Fish and Game, and California Energy Commission. Consulted with above-mentioned agencies and the California Regional Water Quality Control Board for Clean Water Act Section 404 permit and Section 401 water quality certification to fill seasonal wetlands and construct gas pipeline through Sutter National Wildlife Refuge. Conducted stream geometry surveys and water quality analysis for irrigation canals, Sutter Bypass, and Sacramento River. As the CEC qualified Designated Biologist prepared and implemented a mitigation implementation and monitoring plan for sensitive biological resources during construction and operation of the project.

Application for Certification (AFC) of Delta Energy Center, Calpine Corporation, Pittsburg, California. Task Manager for biological resource impact analysis and document section of AFC. Performed threatened and endangered species surveys, literature search, and wildlife impact evaluation for proposed electric power plant, natural gas pipeline route, and electric transmission line route. Conducted wet season and dry season surveys for listed vernal pool branchiopod species. Currently preparing wetland delineation report, biological assessment, and mitigation plans for U.S. Army Corps of Engineers, U.S. Environmental Protection Agency, U.S. Fish and Wildlife Service, U.S. National Marine Fisheries Service, California Department of Fish and Game, and California Energy Commission. Consulted with above-mentioned agencies and the California Regional Water Quality Control Board for Clean Water Act Section 404 permit, Section 10 Rivers and Harbors Act, and Section 401 water quality certification to construct in areas of coastal wetlands with special-status species such as California clapper rail, salt-marsh harvest mouse, species occurring within the Antioch Dunes National Wildlife Refuge. As the CEC qualified Designated Biologist prepared and

implemented a mitigation implementation and monitoring plan for sensitive biological resources during construction and operation of the project.

Application for Certification (AFC) of Metcalf Energy Center, Calpine Corporation, San Jose, California. Task Manager for biological resource impact analysis and document section of AFC. Performed threatened and endangered species surveys, literature search, and wildlife impact evaluation for proposed electric power plant, recycled water supply line, natural gas pipeline route, and electric transmission line connection. Prepared the biological resources section of the AFC and initiated consultations for sensitive biological resources with U.S. Army Corps of Engineers, U.S. Environmental Protection Agency, U.S. Fish and Wildlife Service, U.S. National Marine Fisheries Service, California Regional Water Quality Control Board, California Department of Fish and Game, City of San Jose, Santa Clara Valley Water District, and California Energy Commission. Consulted with local experts and USFWS on potential impacts to serpentine habitat on Tulare Hill and with Santa Clara Valley Water District on potential impacts within the Fisher Creek Riparian Corridor. Prepared Management Plan for the MEC Ecological Preserve and Fisher Creek Riparian Corridor Enhancement Plan. As the CEC qualified Designated Biologist prepared and implemented a mitigation implementation and monitoring plan for sensitive biological resources during construction and operation of the project.

Threatened and Endangered Species Surveys for Seismic Upgrade of Mokelumne Aqueduct No.3, East Bay Municipal Utility District, San Joaquin County, California. Conducted surveys for special-status species along the aqueduct pipelines. Prepared a technical biological assessment for consultations with the California Department of Fish and Game, U.S. Fish and Wildlife Service, and U.S. Army Corps of Engineers. Developed mitigation measures to protect delta smelt, chinook salmon, Central Valley steelhead, Sacramento splittail, and nesting Swainson's hawks and burrowing owls along the aqueduct during construction.

Wildlife Surveys for Piñon Pine Power Project; Sierra Pacific Power Company, Nevada. Assisted in research of threatened and endangered species present in project vicinity. Conducted threatened and endangered wildlife surveys. Conducted small mammal trapping and identification for habitat evaluation.

Threatened and Endangered Species Surveys for New Electric Transmission Line Corridors; Sacramento Municipal Utility District, Sacramento County, California. Assisted in threatened and endangered species surveys of new utility corridors in Sacramento County. Located occurrences of state protected species including Swainson's hawks, burrowing owls and vernal pool crustaceans.

Low-Effect Habitat Conservation Plan for Tulare Irrigation District Main Intake Canal Lining Project, Visalia, California. Performed San Joaquin kit fox surveys using camera stations and walking transects under the USFWS survey protocols. Prepared technical memorandum for submittal to USFWS. Assisted in preparation of Low-effect habitat conservation plan for Valley elderberry longhorn beetle in project area.

Biota Collection for Kesterson Reservoir, Bureau of Land Management, Gustine, California. Collected blood samples from American kestrels and loggerhead shrike for selenium evaluation. Collected aquatic insects for selenium analysis from ponding areas. Conducted

avian surveys and telemetry field work on kestrels at the site.

Habitat Evaluation Procedures (HEP) Study and Sensitive Species Surveys for Ramsey-French Meadow Hydroelectric Project, Northern California Power Agency, Upper Stanislaus River, California. Assisted in timber map and aerial photograph evaluation, habitat typing, planimetering, field surveys, and ground-truthing of delineated habitat polygons, along with data compilation. Assisted in spotted owl and northern goshawk surveys and data compilation. Mapped mule deer migration routes, and summer, winter, and fawning habitats along proposed transmission line. Mapped sensitive wildlife species sightings along proposed transmission line.

Threatened and Endangered Fairy Shrimp and Tadpole Shrimp Species, Simpson Environmental, San Joaquin, Calaveras, Tuolumne, and Solano counties, California. Project manager and field technician for vernal pool crustacean surveys on project sites requiring agency consultation. Responsible for organization and conducting vernal pool crustacean surveys under a Section 10 Scientific Take Permit and US Fish and Wildlife Service Vernal Pool Crustacean Survey Guidelines.

Wetland Delineation for Hazardous Waste Remediation, U.S. Navy, Naval Weapons Station--Seal Beach, Seal Beach, California. Conducted wetland delineation and prepared wetland delineation report. Consulted with U.S. Army Corps of Engineers, and U. S. Fish and Wildlife Service to determine impacts of remedial action on threatened and endangered species and southern California coastal salt marsh habitat. Consulted with California Coastal Commission on Coastal Consistency Determination.

Wetland Delineation and Section 404 Permit for B.T. Collins Army Reserve Training Center, U.S. Army Reserve Command, Sacramento, California. Responsible for delineation of seasonal wetlands on the Reserve Center. Consulted with U.S. Army Corps of Engineers, U.S. Fish and Wildlife Service, California Department of Fish and Game, California Regional Water Quality Control Board for mitigation measures and Nationwide Permit 26 to fill seasonal wetlands. Process included preparation of California Environmental Quality Act Initial Study, Section 404 Predischarge Notification package, Section 401 Water Quality Certification application, Streambed Alteration Agreement (FG 1601), Biological Assessment, and mitigation plan assumed in the resulting Biological Opinion.

Professional Societies

California Native Plant Society

Society of Ecological Restoration

California Inland Invertebrate Working Group

California Burrowing Owl Consortium

Sacramento Audubon Society

Sacramento Wildlife Care Association

The Wildlife Society

John Cleckler

John Cleckler
Wildlife and Fisheries Biologist

Education
B.S., University of California at Davis, 1990

Representative Projects

- **Project Biologist, Metcalf Energy Center, Santa Clara County.** Assisted in preparation of the Biological Resource Mitigation Implementation and Monitoring Plan, Resource Management Plan for the MEC Preserve, Fisher Creek Riparian Corridor Enhancement Plan, and Horizontal Directional Drilling Inadvertent Returns Contingency Plan. Managed monitoring efforts, document review, and prepared the environmental training program associated with the proposed Metcalf Energy Center.

- **Team Leader, Teayawa Energy Center Desert Tortoise Surveys, Riverside County.** Performed protocol desert tortoise surveys along proposed utility lines associated with the Teayawa Energy Center project. Assisted with preparation and review of the Biological Resources section of the EIS/EIR.

- **Bird/Wind Turbine Interaction Study, California Energy Commission.** Conducted standard point count surveys for bird/wind turbine interaction study near Tehachapi and Palm Springs, California. Also participated in scavenger studies, data entry, and report writing.

- **Desert Tortoise Monitoring, Mission Geoscience.** Performed desert tortoise monitoring for exploratory drilling project near Barstow, California. Included presentation of an environmental awareness training program.

- **Burrowing Species of Special Concern Survey, Los Vaqueros Reservoir Project.** Conducted surveys for burrowing species of special concern, including San Joaquin kit fox, burrowing owl, and American badger, for the Los Vaqueros Reservoir construction project near Livermore, California. Also constructed drift fences for California tiger salamander.

- **Sensitive Species Surveys, Coachella Valley Association of Governments.** Performed focused surveys for a highway interchange expansion project. Focused surveys were conducted for Coachella Valley fringed-toed lizard, Coachella Valley Jerusalem cricket, Coachella Valley giant sand treader cricket, and Coachella Valley grasshopper.

- **Fish Creek Restoration Project, Vulcan Materials/CalMat Division.** Performed a biological reconnaissance survey to determine impacts associated with the proposed realignment and restoration of Fish Creek.

- **Sun Valley Biological Resources Assessment and Tree Inventory, Vulcan Materials/CalMet Division.** Performed a biological reconnaissance survey to determine impacts of proposed mining expansion. Assessment included an inventory of native tree species.

- **Oro Grande Sand and Gravel Mine Restoration Project, Vulcan Materials/CalMet Division.** Performed a biological reconnaissance survey to determine impacts associated with the reclamation strategy and proposed reclamation activities. Special focus was placed on determination of suitable desert tortoise habitat. Developed an environmental awareness program and a list of avoidance measures.

- **Fiber Optic Communications Project Construction Monitoring-Level (3) Communications.** Managed construction monitoring of a 96.5-mile longhaul fiber optic communications line. Special focus was placed on avoidance of desert tortoise and Mohave ground squirrel habitat. Included development and implementation of an environmental awareness program.

- **Sawpit Dam Modification Project, County of Los Angeles Department of Public Works.** Conducted riparian nesting bird surveys downstream of the Sawpit Reservoir. Also trapped southwestern pond turtles prior to de-watering of the reservoir.

- **Southwestern Pond Turtle Translocation Study, County of Los Angeles Department of Public Works.** Captured and translocated southwestern pond turtles from the San Gabriel and Morris reservoir sediment removal project area. Subsequently monitored the translocation success and turtle movement using radio telementry and GPS.

- **Fiber Optic Communications Cable, Level (3) Communications.** This project included a full range of biological permitting services in support of a nationwide fiber optic network installation project. This linear project included extensive segments transecting the Mojave Desert and the Central Coast regions. Approximately 75 percent of the buried fiber optic cable system was located within railroad right-of-ways. The remainder was located within highway right-of-ways and limited private lands. Responsibilities included environmental documentation and permitting, including wetland delineations, biological resource surveys, and agency consultation.

- **San Joaquin Sanctuary Restoration Project, Irvine Water District.** Conducted breeding birds surveys with special focus on the presence of least Bell's vireo. Monitored construction activities in the vicinity of critical habitat.

- **Quarry at Wheeler Ridge Biological Mitigation Plan, Vulcan Materials/CalMet Division.** Performed a biological reconnaissance survey to determine impacts of proposed mining expansion. Special focus was placed on determination of suitable San Joaquin kit fox and blunt-nosed leopard lizard habitat. A list of appropriate mitigation measures was compiled.

- **Desert Tortoise Survey and Construction Monitoring, Earth Tech, Corrections Corporation of America.** Monitored California City Prison construction activity in desert tortoise habitat. Performed a tortoise clearance survey of a 67.5-acre exclosure. Processed and relocated tortoises. Surveys were conducted under a U.S. Fish and Wildlife Services (USFWS) permit. Prepared and delivered a worker education program.

- **Desert Tortoise Mark/Recapture Survey, National Training Center.** Conducted a mark / recapture survey for desert tortoises on two 1-square mile plots at the National Training Center, Fort Irwin. Surveys are being conducted under USFWS Regional Blanket Permit and subpermit.

- **Hawksbill Turtle Study, Queensland Department of Environmental Heritage, Australia.** Assisted Ph.D. student with an intensive hawksbill turtle nesting biology study within the Great Barrier Reef.

- **Black-Naped Tern Monitoring, Queensland Department of Environmental Heritage, Australia.** Monitored black-naped tern nests as part of an island ecology study in the Great Barrier Reef. Nest success and behavior was observed and recorded on a daily basis throughout the nesting season. These data were collected in conjunction with an ongoing sea turtle project funded by the Queensland Department of Environmental Heritage.

- **Vegetation Surveys, California State University Domingos Hills Foundation, National Training Center.** Conducted vegetation surveys for a disturbance comparison study at the National Training Center, at Fort Irwin near Barstow, California. Used line transects, frequency frames, and biomass analysis methods.

- **Desert Tortoise Survey, Bureau of Land Management.** Conducted desert tortoise population density surveys for the purpose of testing the one-km2 and one-hectare survey methods against the standard 60-day design. Measured, weighed, marked, and assessed health of tortoises.

- **Biological Survey, Weyerhaeuser.** Surveyed old growth habitat for marbled murrelets on Weyerhaeuser tree farm property near Coos Bay and Roseville, Oregon. Assisted with northern spotted owl surveys.

- **Mohave Ground Squirrel Survey, California Energy Commission.** Trapped, handled, and installed pit tags on Mohave ground squirrels near China Lake, California.

- **Desert Tortoise Survey, Los Angeles Department of Water and Power.** Surveyed for, measured, weighed, marked, and relocated desert tortoises for a Los Angeles Department of Water and Power transmission line construction project. Constructed tortoise burrows and relocated eggs. Monitored construction activities and maintained client relations. Compiled a variety of daily reports. Surveys were conducted in accordance with Biological Opinion #1-6-90-F46.

- **Guanaco Natural History Study, Iowa State University.** Assisted Ph.D. student with ongoing study of guanacos (a camelid species) in Torres Del Paine National Park, Chile. Collected data for behavioral, radio telementry, and mortality studies. Captured and tagged newborn and adult male guanacos.

- **Salmon Habitat Survey, California Department of Fish and Game.** Surveyed salmon habitat in northwestern California using the General Aquatic Wildlife System. Recorded dimensional measurements, substrate channel types, riparian cover, and other stream features. Conducted electroshock fish sampling.

- **Desert Tortise Survey, Kern River Gas Company.** Surveyed for, handled, marked, and relocated desert tortoises for a pipeline construction project. Monitored construction activities and maintained client relations. Coordinated biology crews and completed a variety of daily reports. Surveys were conducted in accordance with Biological Opinion #1-1-89-F36R.

- **Ozone Damage Assessment, Sequoia and Kings Canyon National Parks.** Assisted air quality specialist with assessment of ozone damage to pine species by way of chloretic mottle indices.

- **Peregrine Falcon Monitoring Survey, The Peregrine Fund.** Monitored the hacking procedure release of three juvenile peregrine falcons in Great Basin National Park, Nevada. Conducted behavioral observations, predator defense, radio telemetry, and data recording. Compiled written report following release.

- **Bear Management, Sequoia and Kings Canyon National Parks.** Assisted park biologists with black bear management program. Included educational presentations, incident reporting, and bear capture.

Professional Associations

- The Wildlife Society
- Desert Tortoise Council
- Society for Conservation GIS
- California Native Plant Society

Workshops, Seminars, and Professional Training

Surveying, Monitoring, and Handling Techniques Workshop – Desert Tortoise Council, 1992, 1993, 1999, and 2000

Wetland Delineation Training – Wetland Training Institute, 1998

Tracking and Wilderness Awareness Training – Earth Skills, 1998

Horizontal Directional Drilling Inspector Certification Seminar – North American Society for Trenchless Technology & California Department of Transportation, 2000 (certification received).

Appendix 3.3 Cultural Resources

Resume of Archaeological Surveyor

Raena Ballantyne

Raena Ballantyne

Cultural Resource Specialist

Education

M.S., Historic Preservation, University of Oregon, in progress
B.S., Anthropology, Brigham Young University, 2002

Professional Registrations

Permitted: Archaeological Field Supervisor, Utah, 2001

Distinguishing Qualifications

- 6 years of experience in cultural resource management including 3 years with the Forest Service and 3 years in private consulting
- Understanding of NEPA, Section 106, ARPA, NAGPRA, Section 4(f), and other legislation regulating cultural resource management
- Specialization in historic archaeology and built environment resource documentation and evaluation
- Has served as cultural resource specialist on a number of remediation projects, utility projects, and transportation projects

Relevant Experience

Ms. Ballantyne is a staff scientist with CH2M HILL's Energy, Environment, and Systems (EE&S) Business Group in Portland, Oregon. She has conducted State Historic Preservation Office (SHPO) file and literature searches and has researched cultural and environmental contexts and conducted chain of title and tax lot records at county, city, and state libraries, historical societies, museums, and county assessor offices. She is adept at conducting field inventory surveys for prehistoric and historic archaeological sites as well as resources of the built environment. Ms. Ballantyne has documented archaeological sites and built-environment resources using archaeological site records and historic inventory forms and has assisted in preparing Determinations of Eligibility (DOE) for several projects. She conducts exploratory and controlled archaeological testing for linear project corridors as well as block-area projects. Ms. Ballantyne specializes in historic archaeology and built-environment studies, particularly those relating to industrial and rural sites.

Representative Projects and Dates of Involvement

Environmental Remediation Projects

Cultural Resource Specialist; Alcoa-Company Lake Remediation; Reynolds/Alcoa Aluminum; Troutdale, Oregon; 4/2003-7/2003. Performed a site record and literature search at the Oregon SHPO; performed subsurface archaeological testing and screening around Company Lake; GPSed test locations; co-authored the technical memorandum.

Cultural Resource Specialist; UPRR Wyeth Site Remediation Project; Union Pacific Railroad; Wyeth, Oregon10/2003-2/2004. Performed a site record and literature search at the Oregon SHPO; documented historic building remains using written descriptions, photographs, and GPS data collection; completed electronic documentation forms for cultural resources; authored a

preliminary report of the cultural resource investigation findings; performed subsurface archaeological testing throughout the project area.

Cultural Resource Specialist; Topock Compressor Site Remediation Project; Client; Needles, California; 4/2004-7/2004. Performed a reconnaissance-level pedestrian cultural resource survey of 100 acres; completed electronic site forms for 5 new archaeological sites and updated electronic forms for 2 existing sites.

Reviewer; Geothermal Landfill Closure Project; US EPA; Lake County, California; 6/2003. Provided oversight review of a sub-consultant's cultural resource inventory and evaluation technical report.

Transportation Projects

Oregon Transportation Projects

Cultural Resource Specialist/Fisheries Biologist Assistant; Pioneer Mountain to Eddyville; ODOT; Eddyville, Oregon; 4/2003-1/2004. Performed a pedestrian cultural resource inventory survey of the project area; documented cultural resources; assessed project impacts to historic and prehistoric cultural resources; performed subsurface archaeological testing and screening; GPSed testing locations; authored the technical report and EIS cultural resource section. Assisted in stream mapping and fisheries survey with fisheries biologist.

Cultural Resource Specialist; Woodburn Interchange; ODOT; Woodburn, Oregon; 10/2003-1/2004. . Performed a site record and literature search at the Oregon SHPO; performed a pedestrian cultural resource inventory survey of the project area; documented cultural resources; assessed project impacts to historic and prehistoric cultural resources.

Archaeologist; Delta Park Victory to Lombard; ODOT; Portland, Oregon; 6/2004-6/2005. . Assisted in creating, revising, and amending project scopes and budgets for cultural resource tasks. Performed a site record and literature search at the Oregon SHPO; performed a pedestrian cultural resource inventory survey of the project area; identified locations where subsurface archaeological testing would be appropriate; completed archaeological subsurface testing and screening; GPSed the test locations; documented cultural resources and evaluated their NRHP significance; evaluated project impacts to cultural resources; authored the archaeological evaluation technical memorandum and EIS section.

Cultural Resource Specialist; Oleson Road Project; Washington County; Portland, Oregon; 4/2004-10/2004. Performed a site record and literature search at the Oregon SHPO; performed a pedestrian cultural resource inventory survey of the project area; completed a pedestrian inventory survey of the 2-mile long project area; documented historic and built-environment resources using digital and black-and-white photographs, written descriptions, and GPS data collection; completed Section 106 documentation forms and Determination of Eligibility forms (DOE, analyzed project impacts to historic resources and completed level of effect (LOE) forms; authored the technical memorandum; authored the mitigation plan and corresponded with private landowners and project planners to minimalize impacts to historically significant properties.

Cultural Resource Specialist; Olex-Rock Creek Grade Project; ODOT; Olex, Oregon; 6/2003-4/2004. Performed a site record and literature search at the Oregon SHPO; performed a pedestrian cultural resource inventory survey of the ~70-acre project area; completed a

pedestrian inventory survey of the project area; documented historic buildings using digital and black-and-white photographs, written descriptions, and GPS data collection; completed Section 106 documentation forms; authored the technical memorandum.

Cultural Resource Specialist; North Ontario Interchange Project; ODOT; Ontario, Oregon; 6/2003-4/2004. Performed a site record and literature search at the Oregon SHPO; performed a pedestrian cultural resource inventory survey of the ~300-acre project area; completed a "fatal-flaws" level analysis of cultural resources; designed a field inventory and archaeological testing methodology plan for further work; co-authored a technical memorandum describing the field methodology and fatal flaws analysis.

Alaska Transportation Projects

Cultural Resource Specialist; South Mitkof Island Ferry; ADOT&PF; Petersburg, Alaska; 9/2003-4/2004. Performed a pedestrian inventory survey of the ~1 mile long project corridor. Tested for subsurface archaeological deposits in some places; analyzed project impacts to known archaeological and historic resources in the project vicinity; authored the cultural resource technical memorandum.

Cultural Resource Specialist; Talkeetna Airport Project; ADOT&PF and the Federal Aviation Administration (FAA); Talkeetna, Alaska; 7/2003-2/2004. Performed a site file and literature search at the Alaska SHPO; performed a cultural resource pedestrian inventory survey for the ~100 acre project area; performed historical, prehistoric, and environmental context research at local libraries, historical societies, agencies, etc. for the project area; analyzed project alternatives according to impacts to cultural resources; authored the cultural resource technical memorandum and made recommendations for alternatives that minimalize impacts to cultural resources.

Cultural Resource Specialist; New Seward Highway; ADOT&PF; Anchorage, Alaska; 6/2003-12/2003. Performed a site file and literature search at the Alaska SHPO; performed a cultural resource pedestrian inventory survey for the ~100 acre project area; performed historical, prehistoric, and environmental context research at local libraries, historical societies, agencies, etc. for the project area; defined the project area of potential effect (APE); authored the Affected Environment section of the Environmental Assessment (EA); designed field inventory methodology.

Utilities

Water Treatment Facilities

Cultural Resource Specialist; Salmon Creek Waste Water Treatment Facility; Clark County; Vancouver, Washington; 6/2003-3/2004. Performed a site file and literature search at the Washington OAHP (SHPO); performed a cultural resource pedestrian inventory survey of the 3 mile long project corridor; documented archaeological resources using written descriptions, photographs and GPS data collection; assisted in archaeological testing at a possible archaeological site; co-authored the technical memorandum, making recommendations regarding impacts to potential and existing cultural resources.

Pipeline Projects

Raena Ballantyne

Archaeologist; Southern Municipal Utilities District (SMUD) Project ; SMUD; Sacramento, California; 5/2003-6/2003. Assisted in excavating subsurface test units along the project corridor within and adjacent to an existing archaeological site.

Cultural Resource Specialist; JWC Pipeline Project, Client; Portland, Oregon; 5/2003-7/2003. Performed site file and literature research at the Oregon SHPO; analyzed project alternatives and proposals according to existing cultural resource presence; authored a "fatal flaws" level analysis for the project.

Hydroelectric Projects

Cultural Resource Specialist; Klamath Hydroelectric Re-licensing Project; Pacificorp; Klamath Falls, Oregon; 6/2004-6/2005. Performed pedestrian archaeological inventory survey alongside a sub-consultant; documented cultural resources using written descriptions, digital photographs, measured to-scale drawings, and GPS data collection. Collaborated with the sub-consultant in writing and electronic form documentation.

Cultural Resource Specialist; North Umpqua Project, Pacificorp; Roseburg, Oregon; 6/2004-1/2005. Assisted in creating a scope and budget for the 3 proposed data recovery excavations; planned and executed the data recover excavations; catalogued and organized the artifact collection; washed, dried, and analyzed artifacts; assisted in writing the final technical memorandum.

Wind Energy Projects

Cultural Resource Specialist; Saddleback Wind Project; PPM Energy, White Salmon, Washington; 8/2003-11/2003. Performed a site file and literature review at the Oregon SHPO; completed a cultural resource pedestrian inventory survey for the proposed project areas; documented cultural resources using written descriptions, GPS data collection, and photography; evaluated cultural resources according to NRHP significance criteria; co-authored the technical memorandum and made project recommendations that minimalized impacts to cultural resources.

Cultural Resource Specialist; Big Horn Wind Project; PPM Energy; Bickleton, Washington; 8/2003-12/2004. Performed a site file and literature review at the Oregon SHPO; completed a cultural resource pedestrian inventory survey for the proposed project areas; documented cultural resources using written descriptions, GPS data collection, and photography; evaluated cultural resources according to NRHP significance criteria; co-authored the technical memorandum and made project recommendations that minimalized impacts to cultural resources.

Transmission Line Projects

Cultural Resource Specialist; BPA Clatskanie PUD Project; Clatskanie Public Utilities District (PUD); Clatskanie, Oregon; 6/2004-7/2004. Performed site file and literature research at the Oregon SHPO; analyzed project alternatives and proposals according to existing cultural resource presence; authored a "fatal flaws" level analysis for the project.

Fiber Optic Line Projects

Cultural Resource Specialist; Century Tel Fiber Optic Line Project; Century Tel; Anacortes, Washington; 4/2004-10/2004. Assisted in the data recovery excavation of a prehistoric archaeological site; catalogued and organized the data recovery artifact collection in cooperation with tribal members; assisted in the identification of human remains found on the

site; washed, dried, and analyzed artifact collection; provided archaeological monitoring for project construction; co-authored the final data recovery report.

Experience Prior to CH2M HILL

U.S. Forest Service, Uinta and Wasatch-Cache National Forests, Utah, 1998-2001. Archaeological technician for the forest service; conducted research and pedestrian inventory surveys; documented cultural resources; performed archaeological excavations; organized volunteer efforts for large projects; authored technical reports; illustrated artifacts for report publications; analyzed prehistoric and historic artifacts from excavations.

SWCA, Inc. Environmental Consultants, Salt Lake City, Utah, 2001-2002. Served as an Archaeologist / Historian for projects in Utah, Wyoming, and Idaho; conducted SHPO research and other research; conducted building surveys and archaeological surveys; served as a field crew chief and field supervisor; documented historic structures and archaeological sites; performed ongoing archaeological monitoring; authored technical reports and monitoring reports; coordinated with clients and agencies regarding cultural resources.

Professional Organizations/Affiliations

Member, Bosco-Milligan Foundation for Historic Preservation

Employment History

Archaeologist / Historian, 2001-2002
SWCA, Inc Environmental Consultants
Salt Lake City, Utah

Archaeological Technician, 1998-2001
Uinta and Wasatch-Cache National Forests
USDA Forest Service
Provo, Utah

Appendix 3.6 Land Use

Transportation Letter

Riverside County Transportation Commission

Riverside County Regional Complex
4080 Lemon Street, 3rd Floor • Riverside, California
Mailing Address: Post Office Box 12008 • Riverside, California 92502-2208
Phone (951) 787-7141 • Fax (951) 787-7920 • www.rctc.org

January 27, 2005

Michael A. Hatfield
Director, Business Development
Calpine Corporation
4160 Dublin Boulevard
Dublin, CA 94568

Dear Mr. Hatfield,

Previously we provided correspondence to the California Energy Commission regarding the Inland Empire Energy Center's proposed location near SR74 in the Romoland area of Riverside County. At that time we referenced planning work going on as part of the Community and Environmental Transportation Acceptability Process (CETAP) to locate a new east-west transportation corridor and noted that one of our alternative alignments was very close to the proposed Energy Center site.

Subsequent to that letter being sent, the Riverside County Transportation Commission took action at their June 11, 2003 meeting to identify the area near Cajalco Road/Ramona Expressway as the preferred location for the new east-west transportation corridor. SR74 is no longer being considered as the east-west CETAP corridor.

Should you need additional information, please feel free to give me a call.

Sincerely,

Cathy Bechtel
Director of Transportation Planning and Policy Development
Riverside County Transportation Commission

Cc: Darcy Kuenzi, Supervisor Ashley's Office

Appendix 3.8 Public Health

Human Health Risk Assessment

Screen Level Health Risk Assessment
Inland Empire Energy Center

The following paragraphs discuss the changes associated with the toxic air contaminant emission levels and impacts associated with the proposed equipment changes.

Toxic Air Contaminant Emissions

As in the analysis performed for the August 2001 AFC, the toxic air contaminant emissions for the gas turbines were calculated using the natural gas-fired gas turbine AP-42 emission factors with the exception of polycyclic aromatic hydrocarbons (PAHs), hexane, and propylene. The AP-42 emission factors for acrolein, benzene, and formaldehyde reflect the use of an oxidation catalyst. Because the AP-42 PAH emission factor does not identify the individual PAHs that make-up this factor, the PAH emissions for the gas turbine were calculated using the California Air Toxic Emission Factor (CATEF) PAH emissions factors. Also, since the AP-42 emission factors do not include factors for hexane or propylene, the analysis was performed using the CATEF emission factor for these two compounds.

For the auxiliary boiler, as in the analysis performed for the August 2001 AFC, the toxic air contaminant emissions were calculated using the natural gas-fired external combustion emission factors from the Ventura County Air Pollution Control District AB2588 emission factor summary document (Ventura County APCD AB2588 Combustion Emission Factors, May 2001). These factors were used to calculate all toxic air contaminant emission levels with the exception of benzaldhyde, benzene, and formaldehyde. For these three pollutants, emissions were calculated using CATEF emission factors for natural gas-fired boilers. The toxic air contaminant emissions for the cooling towers were calculated based on the maximum metal concentrations expected in the cooling water and the maximum expected cooling tower drift rate of 0.0005%. For standby/emergency engines, the Diesel particulate emissions are based on engine vendor data. The detailed toxic air contaminant emission calculations for the gas turbines, auxiliary boiler, standby/emergency engines, and cooling towers are included as Attachment HRA-1.

Tables K-9-1 to K-9-4 of the August 2001 AFC summarized the toxic air contaminant emissions for the project. These tables have been revised to show the emissions associated with the proposed equipment changes. In these tables, the previous emission rates are shown in parentheses. As shown in Table HRA-1 below, the toxic air contaminant emissions associated with the proposed new gas turbines are slightly higher then the levels previously analyzed. With the exception of ammonia, formaldehyde, naphthalene, and propylene oxide, the increase in emissions is due to the higher heat input level for the proposed new gas turbines (2,510 to 2,597 MMBtu/hr) and due to a change to a more conservative annual gas turbine operating assumption. In the previous analysis, annual emissions were based on 8,760 hrs/yr of operation at an

annual average ambient temperature baseline gas turbine operating condition while the revised analysis is based on 8,760 hrs/yr of operation at a cold ambient temperature baseline operating mode. The ammonia emissions have decreased due to a decrease in ammonia slip from 10 to 5 ppmv @ 15% O_2 assumed in the original analysis. The differences in the formaldehyde, naphthalene, and propylene oxide emissions are due mainly to changes to the emission factors that have occurred since the August 2001 analysis was performed.

Table HRA-1 Toxic Air Contaminant Emissions for Gas Turbines (per gas turbine), IEEC Project*

Compound	Hourly Emissions (lbs/hr)	Annual Emissions (tons/yr)
Ammonia	1.74E+01 *(3.37E+01)*	74.76 *(147.54)*
Propylene	1.97E+00 *(1.92E+00)*	8.65 *(7.30)*
	Hazardous Air Pollutants (HAPs)	
Acetaldehyde	1.04E-01 *(1.02E-01)*	0.46 *(0.39)*
Acrolein	9.45E-03 *(9.20E-03)*	0.04 *(0.03)*
Benzene	8.53E-03 *(8.30E-03)*	0.04 *(0.03)*
1,3-Butadiene	1.12E-03 *(1.10E-03)*	0.00 *(0.00)*
Ethylbenzene	8.35E-02 *(8.11E-02)*	0.37 *(0.31)*
Formaldehyde	9.40E-01 *(4.11E-01)*	4.12 *(1.56)*
Hexane	6.63E-01 *(6.45E-01)*	2.90 *(2.45)*
Naphthalene	4.25E-03 *(3.30E-03)*	0.02 *(0.01)*
PAHs (listed individually below)	4.58E-04 *(4.10E-04)*	0.00 *(0.00)*
Anthracene		
Benzo(a)anthracene		
Benzo(a)pyrene		
Benzo(b)fluoranthrene		
Benzo(k)fluoranthrene		
Chrysene		
Dibenz(a,h)anthracene		
Indeno(1,2,3-cd)pyrene		
Propylene oxide	6.89E-02 *(7.37E-02)*	0.30 *(0.28)*
Toluene	3.41E-01 *(3.31E-01)*	1.49 *(1.26)*
Xylene	1.67E-01 *(1.63E-01)*	0.73 *(0.62)*
Total HAPs =		10.47 *(6.96)*

* Previous values are shown in italics in parentheses

As shown in Table HRA-2 below, the toxic air contaminant emissions associated with the proposed new auxiliary boiler are slightly higher then the levels previously analyzed. With the exception of acetaldehyde, benzene, and formaldehyde, the increase in emissions is due to the higher heat input level for the proposed new auxiliary boiler (129 to 157 MMBtu/hr). The differences in the acetaldehyde, benzene, and formaldehyde emissions are due mainly to changes to the emission factors that have occurred since the August 2001 analysis was performed.

Table HRA-2 Toxic Air Contaminant Emissions for Auxiliary Boiler, IEEC Project*

Compound	Hourly Emissions (lbs/hr)	Annual Emissions (tons/yr)
Ammonia	3.38E-01 *(3.00E-01)*	0.41 *(0.45)*
Propylene	2.40E-03 *(1.99E-03)*	0.00 *(0.00)*
Benzaldehyde	2.53E-03 *(n.a.)*	0.00 *(n.a.)*
	Hazardous Air Pollutants (HAPs)	
Acetaldehyde	1.37E-03 *(1.15E-04)*	0.00 *(0.00)*
Acrolein	1.23E-04 *(1.02E-04)*	0.00 *(0.00)*
Benzene	6.65E-04 *(2.17E-04)*	0.00 *(0.00)*
Ethylbenzene	3.09E-04 *(2.56E-04)*	0.00 *(0.00)*
Formaldehyde	3.41E-02 *(4.60E-04)*	0.04 *(0.00)*
Hexane	2.01E-04 *(1.66E-04)*	0.00 *(0.00)*
Naphthalene	4.63E-05 *(3.84E-05)*	0.00 *(0.00)*
PAHs	1.54E-05 *(1.28E-05)*	0.00 *(0.00)*
Toluene	1.20E-03 *(9.98E-04)*	0.00 *(0.00)*
Xylene	8.95E-04 *(7.42E-04)*	0.00 *(0.00)*
Total HAPs =		0.05 *(0.01)*

* Previous values are shown in italics in parentheses

As shown in Table HRA-3, there is a small increase in toxic air contaminant emissions associated with the proposed new cooling towers. This increase is due to an increase in the maximum expected water recirculation rate from 169,847 gals/min (a single tower) to 179,194 gals/min (combined total for two towers). The cooling water metal contents and cooling tower drift rate (0.0005%) remain unchanged from the levels previously analyzed.

Table HRA-3 Toxic Air Contaminant Emissions for Cooling Towers, IEEC Project*

Compound	Hourly Emissions (lbs/hr)	Annual Emissions (tons/yr)
Ammonia	1.16E-03 *(1.10E-03)*	0.00 *(0.00)*
Zinc	4.72E-04 *(4.47E-04)*	0.00 *(0.00)*
	Hazardous Air Pollutants (HAPs)	
Arsenic	8.15E-05 *(7.73E-05)*	0.00 *(0.00)*
Beryllium	1.75E-05 *(1.66E-05)*	0.00 *(0.00)*
Cadmium	1.75E-05 *(1.66E-05)*	0.00 *(0.00)*
Chromium	2.91E-05 *(2.76E-05)*	0.00 *(0.00)*
Copper	4.08E-05 *(3.87E-05)*	0.00 *(0.00)*
Cyanide	5.82E-08 *(5.52E-08)*	0.00 *(0.00)*
Lead	8.73E-05 *(8.29E-05)*	0.00 *(0.00)*
Nickel	1.16E-04 *(1.10E-04)*	0.00 *(0.00)*
Manganese	5.82E-05 *(5.52E-05)*	0.00 *(0.00)*
Mercury	2.91E-06 *(2.76E-06)*	0.00 *(0.00)*
Selenium	1.22E-04 *(1.16E-04)*	0.00 *(0.00)*
Total HAPs =		0.00 *(0.00)*

* Previous values are shown in italics in parentheses

As shown in Table HRA-4, there is a decrease in the Diesel particulate emissions associated with the emergency firepump engine due to a decrease in the rating of this engine (337 to 300 hp). In addition, the Diesel particulate emission factor for the proposed new emergency firepump engine is lower then the level analyzed in the 2001 AFC. Regarding the proposed new standby generator engines, the number of standby generator engines has increased from a single engine to two engines. In addition, the standby generator engines have been changed from natural gas to Diesel fired. Furthermore, the size of the standby generator engines has increased from 1,467 hp to 2,848 hp. Because of these changes, Table HRA-4 shows an increase in the Diesel particulate emissions for the standby generator engines.

Table HRA-4 Toxic Air Contaminant Emissions for Standby/Emergency Engines, IEEC Project*

Equipment	Diesel PM Hourly Emissions (lbs/hr)	Diesel PM Annual Emissions (tons/yr)
Emergency Fire Pump Engine	0.06 *(0.19)*	0.00*(0.00)*
Standby Generator Engine Number 1	0.15 *(0.00)*	0.00 *(0.00)*
Standby Generator Engine Number 2	0.15 *(n.a.)*	0.00 *(n.a.)*
Total HAPs =		0.00 *(0.00)*

* Previous values are shown in italics in parentheses

Screening Level Risk Assessment Modeling

As part of the August 2001 AFC, a screening level risk assessment was performed using the California Air Resources Board (CARB)/Office of Environmental Health and Hazard Assessment (OEHHA) Health Risk Assessment (HRA) computer program. This computer model has been superseded by CARB's Hotspots Analysis and Reporting Program (HARP) computer program. Therefore, for the proposed equipment changes, a revised screening level health risk assessment has been prepared using the HARP model and associated guidance in the OEHHA's *Air Toxics Hot Spots Program Guidance Manual for Preparation of Health Risk Assessments* (August 2003). The HARP model was used to assess cancer risk as well as chronic and acute risk impacts. The following paragraphs describe the procedures used to prepare this risk assessment.

Modeling Inputs

The risk assessment module of the HARP model was run using unit ground level impacts to obtain derived cancer risks for each toxic chemical of interest.[1] Cancer risks were obtained for the derived (OEHHA) method, the derived (adjusted) method, average point estimate and high-end point estimate options. The HARP model output was cancer risk by pollutant and route for each type of analysis, based on an exposure of 1.0 ug/m^3. As discussed in more detail below, the ISC model was used to generate the actual ambient concentrations, which were then combined with the HARP unit values to determine final actual cancer risk and hazard indices. HARP model output showing the unit values is included as Attachment HRA-2. Individual cancer risks are expressed in units of risk per ug/m^3 of exposure. To calculate the weighted risk for each source, the annual average emission rate in g/s for each pollutant was multiplied by the individual cancer risk for that pollutant in (ug/m^3)$^{-1}$. The resulting weighted cancer risks for each pollutant were then summed for the source. An identical approach was used to determine the acute and chronic health impacts associated with the proposed project.

[1] Procedure is described in Part B of Topic 8 of the HARP How-To Guides: How to Perform Health Analyses Using a Ground Level Concentration.

Details of the calculations of risk "rates" for modeling are shown in Attachment HRA-3.

Risk Analysis Method

The total weighted risk "rate" for each source was used in place of emission rates in the ISC modeling analysis. The ISC model output was then total cancer risk at each receptor. Each modeling analysis was performed using the ISCST3 model, the 1981 South Coast Air Quality Management approved meteorological data for the Riverside monitoring station, the receptor grids, and the stack parameters used in the criteria pollutant modeling analysis discussed in Section 3.1. The highest annual average risk modeled was used to characterize cancer risks for the proposed project.

The contribution of each source and each toxic compound to total cancer risk for each analysis method was then determined using the individual contribution of each compound and source to the total weighted risk "rate."

Summary of Results

The results of the screening level health risk assessment are summarized in the following table. In this table, the previous impacts are shown in parentheses.

Table HRA-5 Screening Level Risk Assessment Results IEEC Project*						
Risk Methodology	**Gas Turbines**	**Standby Generator Diesel Engines**	**Emergency Fire Pump Diesel Engine**	**Auxiliary Boiler**	**Cooling Towers**	**Maximum Project Risk[a]**
Modeled Residential Cancer Risk (in one million)						
Residential: Derived (OEHHA) Method	1.27	0.30	0.85	0.02	0.09	1.39
Residential: Average Point Estimate	0.61	0.21	0.59	0.01	0.06	0.69
Residential: High-end Point Estimate	1.29	0.30	0.85	0.02	0.09	1.41
Residential: Derived (adjusted) Method	1.11	0.23	0.65	0.01	0.07	1.20
Maximum =	1.29	0.30	0.85	0.02	0.09	1.41 *(0.28)*
Modeled Worker Cancer Risk (in one million)						
Worker Exposure: Derived (OEHHA) Method	0.32	0.05	0.13	0.01	0.01	0.34 *(n.a.)*
Modeled Acute and Chronic Impacts						
Acute HHI	0.110	--	--	0.009	0.002	0.112 *(0.06)*
Chronic HHI	0.045	0.000	0.000	0.001	0.001	0.046 *(0.048)*

[a] Maximum combined impacts from equipment at any single receptor location. This does not equal summation of maximum individual impacts because the maximum impacts from each set of equipment occur at different receptor locations.
* Previous values are shown in italics in parentheses

As shown in Table HRA-5, the relative contributions from each type of equipment show that the largest contributor to the cancer, chronic, and acute risks is the gas turbines. In addition, as shown in Table HRA-5 there is an increase in the overall project cancer risk and an increase in the acute impacts. Furthermore, there is a decrease in the chronic impacts. While there were some small increases in toxic air contaminant emission rates

due higher maximum heat inputs for some of the combustion equipment, the main reason for the change in risk impacts is due to the use of a different computer model to characterize the risk associated with these pollutants. While the cancer risk has increased, the new level remains well below the SCAQMD significance level of 10 in one million. In addition, the acute and chronic health impacts remain well below the SCAQMD significance level of one. Consequently, there are no new significant toxic air contaminant impacts issues associated with the proposed equipment changes.

The spatial extent of the residential and workplace cancer risks obtained using the derived (OEHHA) method is shown in the attached figures. Figure HRA-1 shows the residential cancer risk over the nearby area. This figure shows that the area in which the cancer risk from the project is expected to exceed one in one million is a small area located on some hill tops located to the south of the project site. Figure HRA-2 shows the extent of the worker cancer risk.

Figure HRA-1
Residential Cancer Risk (in one million)
Derived (OEHHA) Method

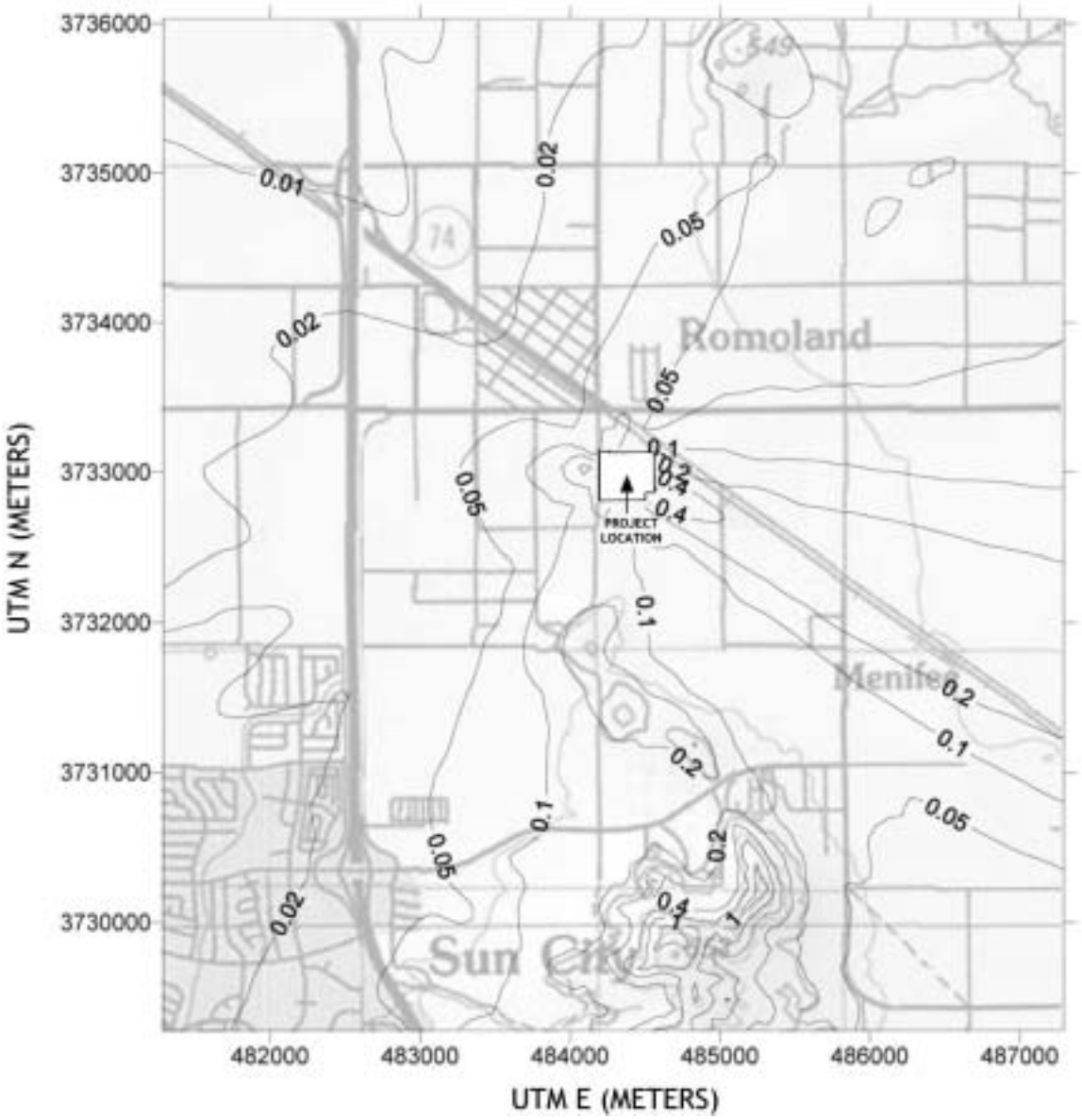

Figure HRA-2
Worker Cancer Risk (in one million)
Derived (OEHHA) Method

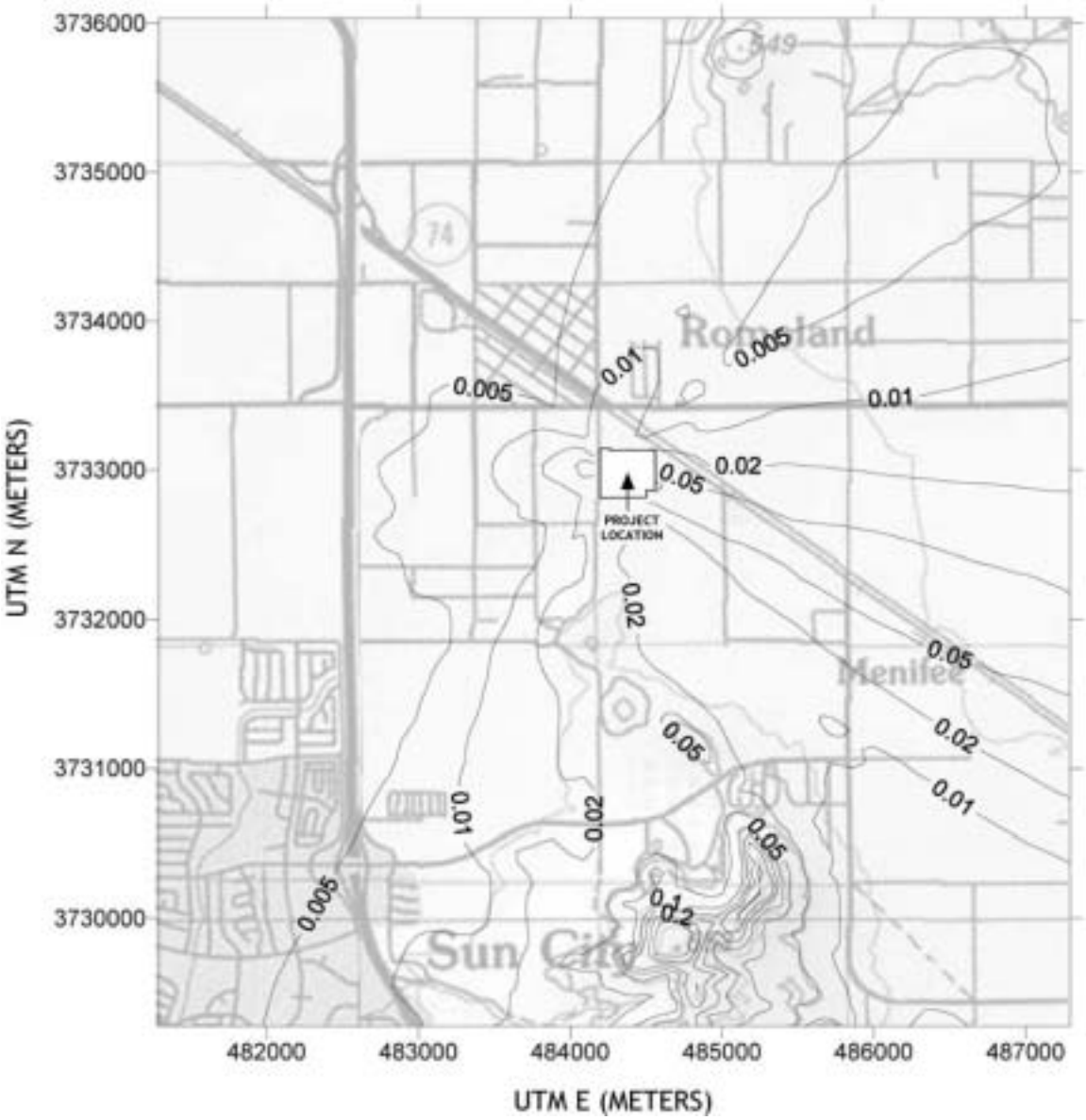

Attachment HRA-1
Detailed Emission Calculations

ATTACHMENT HRA-1

DETAILED EMISSION CALCULATIONS

Table HRA-1-1
Annual and Maximum Hourly Non-Criteria Pollutant Emissions From Gas Turbines

Pollutant	Emission Factor(1) lb/MMscf	1 Turbine Max Firing Rate MMBtu/hr	Natural Gas HHV Btu/scf	Turbine Operating Hours hrs/yr	1 Turbine Max Hourly Firing Rate MMscf/hr	1 Turbine Annual Avg Firing Rate MMscf/yr	1 Turbine Max. Hourly Emissions lbs/hr (each)	2 Turbines Max. Hourly Emissions lbs/hr	1 Turbine Annual Emissions tons/yr (each)	2 Turbines Annual Emissions tons/yr	Hourly Emission Rate Per Turbine g/sec (each)	Annual Emission Rate Per Turbine g/sec (each)
Ammonia	(2)	2,597.6	1,014.6	8760	2.56	22,427.39	1.74E+01	3.48E+01	74.76	149.53	2.20E+00	2.15E+00
Propylene	7.71E-01	2,597.6	1,014.6	8760	2.56	22,427.39	1.97E+00	3.95E+00	8.65	17.29	2.49E-01	2.49E-01
Hazardous Air Pollutants												
Acetaldehyde	4.08E-02	2,597.6	1,014.6	8760	2.56	22,427.39	1.04E-01	2.09E-01	0.46	0.92	1.32E-02	1.32E-02
Acrolein	3.69E-03	2,597.6	1,014.6	8760	2.56	22,427.39	9.45E-03	1.89E-02	0.04	0.08	1.19E-03	1.19E-03
Benzene	3.33E-03	2,597.6	1,014.6	8760	2.56	22,427.39	8.53E-03	1.71E-02	0.04	0.07	1.07E-03	1.07E-03
1,3-Butadiene	4.39E-04	2,597.6	1,014.6	8760	2.56	22,427.39	1.12E-03	2.25E-03	0.00	0.01	1.42E-04	1.42E-04
Ethylbenzene	3.26E-02	2,597.6	1,014.6	8760	2.56	22,427.39	8.35E-02	1.67E-01	0.37	0.73	1.05E-02	1.05E-02
Formaldehyde	3.67E-01	2,597.6	1,014.6	8760	2.56	22,427.39	9.40E-01	1.88E+00	4.12	8.23	1.18E-01	1.18E-01
Hexane	2.59E-01	2,597.6	1,014.6	8760	2.56	22,427.39	6.63E-01	1.33E+00	2.90	5.81	8.35E-02	8.35E-02
Naphthalene	1.66E-03	2,597.6	1,014.6	8760	2.56	22,427.39	4.25E-03	8.50E-03	0.02	0.04	5.35E-04	5.35E-04
PAHs (listed individually below)	1.79E-04	2,597.6	1,014.6	8760	2.56	22,427.39	4.58E-04	9.17E-04	0.00	0.00	5.77E-05	5.77E-05
Anthracene												
Benzo(a)anthracene												
Benzo(a)pyrene												
Benzo(b)fluoranthrene												
Benzo(k)fluoranthrene												
Chrysene												
Dibenz(a,h)anthracene												
Indeno(1,2,3-cd)pyrene												
Propylene oxide	2.69E-02	2,597.6	1,014.6	8760	2.56	22,427.39	6.89E-02	1.38E-01	0.30	0.60	8.68E-03	8.68E-03
Toluene	1.33E-01	2,597.6	1,014.6	8760	2.56	22,427.39	3.41E-01	6.81E-01	1.49	2.98	4.29E-02	4.29E-02
Xylene	6.53E-02	2,597.6	1,014.6	8760	2.56	22,427.39	1.67E-01	3.34E-01	0.73	1.46	2.11E-02	2.11E-02
Total HAPs =										20.94		

Notes:

(1) All factors except PAHs, hexane and propylene from AP-42, Table 3.1-3, 4/00. Acrolein, benzene and formaldehyde reflect oxidation catalyst. Individual PAHs, hexane and propylene are CATEF mean results as AP-42 does not include factors for these compounds.

(2) Based on 5 ppm ammonia slip from SCR system.

Table HRA-1-2
Annual and Maximum Hourly Non-Criteria Pollutant Emissions From Auxiliary Boiler

Compound	Emission Factor (lbs/mmscf)(1)	Hourly Emissions (lbs/hr)	Annual Emissions (tons/yr)	Hourly Emissions (g/sec)	Annual Emissions (g/sec)
Ammonia	(4)	3.48E-01	0.4075	4.39E-02	1.17E-02
Propylene	1.55E-02	2.40E-03	0.0028	3.02E-04	8.07E-05
Hazardous Air Pollutants					
Acetaldehyde	8.87E-03	1.37E-03	0.0016	1.73E-04	4.61E-05
Acrolein	8.00E-04	1.23E-04	0.0001	1.56E-05	4.16E-06
Benzene	4.31E-03	6.65E-04	0.0008	8.38E-05	2.24E-05
Benzaldehyde	1.64E-02	2.53E-03	0.0030	3.19E-04	8.52E-05
Ethylbenzene	2.00E-03	3.09E-04	0.0004	3.89E-05	1.04E-05
Formaldehyde	2.21E-01	3.41E-02	0.0399	4.30E-03	1.15E-03
Hexane	1.30E-03	2.01E-04	0.0002	2.53E-05	6.75E-06
Naphthalene	3.00E-04	4.63E-05	0.0001	5.84E-06	1.56E-06
PAHs (excluding Naphthalene)	1.00E-04	1.54E-05	0.0000	1.95E-06	5.20E-07
Toluene	7.80E-03	1.20E-03	0.0014	1.52E-04	4.05E-05
Xylene	5.80E-03	8.95E-04	0.0010	1.13E-04	3.01E-05
Total HAPs =			0.0485		

Notes:
(1) From Ventura County APCD and CATEF databases (CATEF mean factors used for Acetaldehyde, Benzaldehyde, Benzene, and Formaldehyde).

Table HRA-1-3
Non-Criteria Pollutant Emissions from Standby/Emergency Engines

Engine	Pollutant	Hourly Emissions Per Engine (lbs/hr)	Annual Emissions Per Engine (tons/yr)	One-hour Emiss. Rate Per Engine (g/sec)	Annual Emiss. Rate Per Engine (g/sec)
Standby Generator Engine 1	Diesel PM	0.15	0.00	1.85E-02	1.06E-04
Standby Generator Engine 2	Diesel PM	0.15	0.00	1.85E-02	1.06E-04
Firepump Engine	Diesel PM	0.06	0.00	7.08E-03	4.04E-05

Table HRA-1-4

Non-Criteria Pollutant Emissions From Cooling Towers

Pollutant	Recirculation Water Concentration ppmw	Recirculation Water Drift Rate (lbs/hr)	1 Tower Emission Rate lbs/hr (each)	2 Towers Emission Rate lbs/hr	1 Tower Annual Emission Rate ton/yr (each)	2 Towers Annual Emission Rate tons/yr	Hourly Emission Rate Per Cell g/sec (each)	Annual Emission Rate Per Cell g/sec (each)
Ammonia	2.6000	223.90	5.82E-04	1.16E-03	2.55E-03	5.10E-03	9.17E-06	9.17E-06
Arsenic	0.1820	223.90	4.08E-05	8.15E-05	1.78E-04	3.57E-04	6.42E-07	6.42E-07
Beryllium	0.0390	223.90	8.73E-06	1.75E-05	3.82E-05	7.65E-05	1.38E-07	1.38E-07
Cadmium	0.0390	223.90	8.73E-06	1.75E-05	3.82E-05	7.65E-05	1.38E-07	1.38E-07
Chromium	0.0650	223.90	1.46E-05	2.91E-05	6.37E-05	1.27E-04	2.29E-07	2.29E-07
Copper	0.0910	223.90	2.04E-05	4.08E-05	8.92E-05	1.78E-04	3.21E-07	3.21E-07
Cyanide	0.0001	223.90	2.91E-08	5.82E-08	1.27E-07	2.55E-07	4.58E-10	4.58E-10
Lead	0.1950	223.90	4.37E-05	8.73E-05	1.91E-04	3.82E-04	6.88E-07	6.88E-07
Manganese	0.1300	223.90	2.91E-05	5.82E-05	1.27E-04	2.55E-04	4.58E-07	4.58E-07
Mercury	0.0065	223.90	1.46E-06	2.91E-06	6.37E-06	1.27E-05	2.29E-08	2.29E-08
Nickel	0.2600	223.90	5.82E-05	1.16E-04	2.55E-04	5.10E-04	9.17E-07	9.17E-07
Selenium	0.2730	223.90	6.11E-05	1.22E-04	2.68E-04	5.35E-04	9.63E-07	9.63E-07
Zinc	1.0530	223.90	2.36E-04	4.72E-04	1.03E-03	2.07E-03	3.71E-06	3.71E-06

Attachment HRA-2
HARP Model Risk Assessment Module Output

ATTACHMENT HRA-2

HARP MODEL OUTPUT FILES

This file: C:\HARP\PROJECTS\IEEC\Cancer_70yrAdult_OEHHA.txt

Created by HARP Risk Module Version: 21.7.30
Creation date: 11/29/2004 9:25:34 AM

EXCEPTION REPORT
(there have been no changes or exceptions)

Point Estimate
GLC source: chemical cas 71432 deleted by user
Exposure Duration: 70 year (adult resident)
Analysis Method: Derived (OEHHA) Method

CHEMICAL CROSS-REFERENCE TABLE

CHEM	CAS	ABBREVIATION	POLLUTANT NAME
0001	9901	DieselExhPM	Diesel engine exhaust, particulate matter
0002	7440382	Arsenic	Arsenic
0003	7440417	Beryllium	Beryllium
0004	7440439	Cadmium	Cadmium
0005	7440473	Chromium	Chromium
0006	7440508	Copper	Copper
0007	1073	Cyanide cmpds	Cyanide compounds
0008	7439921	Lead	Lead
0009	7439965	Manganese	Manganese
0010	7439976	Mercury	Mercury
0011	7440020	Nickel	Nickel
0012	7782492	Selenium	Selenium
0013	7440666	Zinc	Zinc

CHEMICAL GROUND LEVEL CONCENTRATIONS (micrograms/m^3)

CHEM	CAS	ABBREVIATION	AVERAGE	HOURLY MAX	WATER	PASTURE	FISH
0001	9901	DieselExhPM	1.000E+00	1.000E+00	0.000E+00	0.000E+00	0.000E+00
0002	7440382	Arsenic	1.000E+00	1.000E+00	1.000E+00	1.000E+00	1.000E+00
0003	7440417	Beryllium	1.000E+00	1.000E+00	1.000E+00	1.000E+00	1.000E+00
0004	7440439	Cadmium	1.000E+00	1.000E+00	1.000E+00	1.000E+00	1.000E+00
0005	7440473	Chromium	1.000E+00	1.000E+00	0.000E+00	0.000E+00	0.000E+00
0006	7440508	Copper	1.000E+00	1.000E+00	0.000E+00	0.000E+00	0.000E+00
0007	1073	Cyanide cmpds	1.000E+00	1.000E+00	0.000E+00	0.000E+00	0.000E+00
0008	7439921	Lead	1.000E+00	1.000E+00	1.000E+00	1.000E+00	1.000E+00
0009	7439965	Manganese	1.000E+00	1.000E+00	0.000E+00	0.000E+00	

```
0.000E+00
0010  7439976    Mercury            1.000E+00   1.000E+00   1.000E+00   1.000E+00
1.000E+00
0011  7440020    Nickel             1.000E+00   1.000E+00   1.000E+00   1.000E+00
1.000E+00
0012  7782492    Selenium           1.000E+00   1.000E+00   0.000E+00   0.000E+00
0.000E+00
0013  7440666    Zinc               1.000E+00   1.000E+00   0.000E+00   0.000E+00
0.000E+00


DOMINANT PATHWAYS FOR CANCER
CHEM     INHAL     DERM     SOIL   MOTHER     FISH    WATER      VEG    DAIRY
BEEF    CHICK      PIG      EGG
0001       YES        -        -        -        -        -        -        -
-        -        -        -
0002       YES        -        -        -        -        -        -        -
-        -        -        -
0003       YES        -        -        -        -        -        -        -
-        -        -        -
0004       YES        -        -        -        -        -        -        -
-        -        -        -
0005         -        -        -        -        -        -        -        -
-        -        -        -
0006         -        -        -        -        -        -        -        -
-        -        -        -
0007         -        -        -        -        -        -        -        -
-        -        -        -
0008       YES        -        -        -        -        -        -        -
-        -        -        -
0009         -        -        -        -        -        -        -        -
-        -        -        -
0010         -        -        -        -        -        -        -        -
-        -        -        -
0011       YES        -        -        -        -        -        -        -
-        -        -        -
0012         -        -        -        -        -        -        -        -
-        -        -        -
0013         -        -        -        -        -        -        -        -
-        -        -        -

DERIVED DOSE BY PATHWAY (mg/(kg-d)) FOR CANCER CALCULATIONS
CHEM     INHAL     DERM     SOIL   MOTHER     FISH    WATER      VEG    DAIRY
BEEF    CHICK      PIG      EGG    TOTAL
0001  3.77E-04 0.00E+00 0.00E+00 0.00E+00 0.00E+00 0.00E+00 0.00E+00 0.00E+00
0.00E+00 0.00E+00 0.00E+00 0.00E+00 3.77E-04
0002  3.77E-04 0.00E+00 0.00E+00 0.00E+00 0.00E+00 0.00E+00 0.00E+00 0.00E+00
0.00E+00 0.00E+00 0.00E+00 0.00E+00 7.54E-04
0003  3.77E-04 0.00E+00 0.00E+00 0.00E+00 0.00E+00 0.00E+00 0.00E+00 0.00E+00
0.00E+00 0.00E+00 0.00E+00 0.00E+00 1.13E-03
0004  3.77E-04 0.00E+00 0.00E+00 0.00E+00 0.00E+00 0.00E+00 0.00E+00 0.00E+00
0.00E+00 0.00E+00 0.00E+00 0.00E+00 1.51E-03
0005  2.60E-04 0.00E+00 0.00E+00 0.00E+00 0.00E+00 0.00E+00 0.00E+00 0.00E+00
0.00E+00 0.00E+00 0.00E+00 0.00E+00 1.77E-03
0006  2.60E-04 0.00E+00 0.00E+00 0.00E+00 0.00E+00 0.00E+00 0.00E+00 0.00E+00
0.00E+00 0.00E+00 0.00E+00 0.00E+00 2.03E-03
0007  2.60E-04 0.00E+00 0.00E+00 0.00E+00 0.00E+00 0.00E+00 0.00E+00 0.00E+00
0.00E+00 0.00E+00 0.00E+00 0.00E+00 2.29E-03
0008  3.77E-04 0.00E+00 0.00E+00 0.00E+00 0.00E+00 0.00E+00 0.00E+00 0.00E+00
0.00E+00 0.00E+00 0.00E+00 0.00E+00 2.66E-03
0009  2.60E-04 0.00E+00 0.00E+00 0.00E+00 0.00E+00 0.00E+00 0.00E+00 0.00E+00
0.00E+00 0.00E+00 0.00E+00 0.00E+00 2.92E-03
0010  2.60E-04 0.00E+00 0.00E+00 0.00E+00 0.00E+00 0.00E+00 0.00E+00 0.00E+00
```

```
0.00E+00 0.00E+00 0.00E+00 0.00E+00 3.18E-03
0011  3.77E-04 0.00E+00 0.00E+00 0.00E+00 0.00E+00 0.00E+00 0.00E+00 0.00E+00
0.00E+00 0.00E+00 0.00E+00 0.00E+00 3.56E-03
0012  2.60E-04 0.00E+00 0.00E+00 0.00E+00 0.00E+00 0.00E+00 0.00E+00 0.00E+00
0.00E+00 0.00E+00 0.00E+00 0.00E+00 3.82E-03
0013  2.60E-04 0.00E+00 0.00E+00 0.00E+00 0.00E+00 0.00E+00 0.00E+00 0.00E+00
0.00E+00 0.00E+00 0.00E+00 0.00E+00 4.08E-03

DERIVED CANCER RISK
CHEM     INHAL     DERM     SOIL   MOTHER     FISH    WATER      VEG    DAIRY
BEEF    CHICK      PIG      EGG     MEAT     ORAL    TOTAL
0001  4.15E-04 0.00E+00 0.00E+00 0.00E+00 0.00E+00 0.00E+00 0.00E+00 0.00E+00
0.00E+00 0.00E+00 0.00E+00 0.00E+00 0.00E+00 0.00E+00 4.15E-04
0002  4.52E-03 0.00E+00 0.00E+00 0.00E+00 0.00E+00 0.00E+00 0.00E+00 0.00E+00
0.00E+00 0.00E+00 0.00E+00 0.00E+00 0.00E+00 0.00E+00 4.52E-03
0003  3.17E-03 0.00E+00 0.00E+00 0.00E+00 0.00E+00 0.00E+00 0.00E+00 0.00E+00
0.00E+00 0.00E+00 0.00E+00 0.00E+00 0.00E+00 0.00E+00 3.17E-03
0004  5.65E-03 0.00E+00 0.00E+00 0.00E+00 0.00E+00 0.00E+00 0.00E+00 0.00E+00
0.00E+00 0.00E+00 0.00E+00 0.00E+00 0.00E+00 0.00E+00 5.65E-03
0005  0.00E+00 0.00E+00 0.00E+00 0.00E+00 0.00E+00 0.00E+00 0.00E+00 0.00E+00
0.00E+00 0.00E+00 0.00E+00 0.00E+00 0.00E+00 0.00E+00 0.00E+00
0006  0.00E+00 0.00E+00 0.00E+00 0.00E+00 0.00E+00 0.00E+00 0.00E+00 0.00E+00
0.00E+00 0.00E+00 0.00E+00 0.00E+00 0.00E+00 0.00E+00 0.00E+00
0007  0.00E+00 0.00E+00 0.00E+00 0.00E+00 0.00E+00 0.00E+00 0.00E+00 0.00E+00
0.00E+00 0.00E+00 0.00E+00 0.00E+00 0.00E+00 0.00E+00 0.00E+00
0008  1.58E-05 0.00E+00 0.00E+00 0.00E+00 0.00E+00 0.00E+00 0.00E+00 0.00E+00
0.00E+00 0.00E+00 0.00E+00 0.00E+00 0.00E+00 0.00E+00 1.58E-05
0009  0.00E+00 0.00E+00 0.00E+00 0.00E+00 0.00E+00 0.00E+00 0.00E+00 0.00E+00
0.00E+00 0.00E+00 0.00E+00 0.00E+00 0.00E+00 0.00E+00 0.00E+00
0010  0.00E+00 0.00E+00 0.00E+00 0.00E+00 0.00E+00 0.00E+00 0.00E+00 0.00E+00
0.00E+00 0.00E+00 0.00E+00 0.00E+00 0.00E+00 0.00E+00 0.00E+00
0011  3.43E-04 0.00E+00 0.00E+00 0.00E+00 0.00E+00 0.00E+00 0.00E+00 0.00E+00
0.00E+00 0.00E+00 0.00E+00 0.00E+00 0.00E+00 0.00E+00 3.43E-04
0012  0.00E+00 0.00E+00 0.00E+00 0.00E+00 0.00E+00 0.00E+00 0.00E+00 0.00E+00
0.00E+00 0.00E+00 0.00E+00 0.00E+00 0.00E+00 0.00E+00 0.00E+00
0013  0.00E+00 0.00E+00 0.00E+00 0.00E+00 0.00E+00 0.00E+00 0.00E+00 0.00E+00
0.00E+00 0.00E+00 0.00E+00 0.00E+00 0.00E+00 0.00E+00 0.00E+00
SUM   1.41E-02 0.00E+00 0.00E+00 0.00E+00 0.00E+00 0.00E+00 0.00E+00 0.00E+00
0.00E+00 0.00E+00 0.00E+00 0.00E+00 0.00E+00 0.00E+00 1.41E-02


SITE PARAMETERS

DEPOSITION

   Deposition rate (m/s)             0.05

DRINKING WATER

*** Pathway disabled ***

FISH

*** Pathway disabled ***

PASTURE

*** Pathway disabled ***

HOME GROWN PRODUCE

*** Pathway disabled ***
```

PIGS, CHICKENS AND EGGS

*** Pathway disabled ***

DERMAL ABSORPTION

*** Pathway disabled ***

SOIL INGESTION

*** Pathway disabled ***

MOTHER'S MILK

*** Pathway disabled ***

This file: C:\HARP\PROJECTS\IEEC\Cancer_70yrAdult_AvgPointEst.txt

Created by HARP Risk Module Version: 21.7.30
Creation date: 11/29/2004 9:23:24 AM

EXCEPTION REPORT
(there have been no changes or exceptions)

Point Estimate
GLC source: chemical cas 71432 deleted by user
Exposure Duration: 70 year (adult resident)
Analysis Method: Average point estimate

CHEMICAL CROSS-REFERENCE TABLE

CHEM	CAS	ABBREVIATION	POLLUTANT NAME
0001	9901	DieselExhPM	Diesel engine exhaust, particulate matter
0002	7440382	Arsenic	Arsenic
0003	7440417	Beryllium	Beryllium
0004	7440439	Cadmium	Cadmium
0005	7440473	Chromium	Chromium
0006	7440508	Copper	Copper
0007	1073	Cyanide cmpds	Cyanide compounds
0008	7439921	Lead	Lead
0009	7439965	Manganese	Manganese
0010	7439976	Mercury	Mercury
0011	7440020	Nickel	Nickel
0012	7782492	Selenium	Selenium
0013	7440666	Zinc	Zinc

CHEMICAL GROUND LEVEL CONCENTRATIONS (micrograms/m^3)

CHEM	CAS	ABBREVIATION	AVERAGE	HOURLY MAX	WATER	PASTURE	FISH
0001	9901	DieselExhPM	1.000E+00	1.000E+00	0.000E+00	0.000E+00	0.000E+00
0002	7440382	Arsenic	1.000E+00	1.000E+00	1.000E+00	1.000E+00	1.000E+00
0003	7440417	Beryllium	1.000E+00	1.000E+00	1.000E+00	1.000E+00	1.000E+00
0004	7440439	Cadmium	1.000E+00	1.000E+00	1.000E+00	1.000E+00	1.000E+00
0005	7440473	Chromium	1.000E+00	1.000E+00	0.000E+00	0.000E+00	0.000E+00
0006	7440508	Copper	1.000E+00	1.000E+00	0.000E+00	0.000E+00	0.000E+00
0007	1073	Cyanide cmpds	1.000E+00	1.000E+00	0.000E+00	0.000E+00	0.000E+00
0008	7439921	Lead	1.000E+00	1.000E+00	1.000E+00	1.000E+00	1.000E+00
0009	7439965	Manganese	1.000E+00	1.000E+00	0.000E+00	0.000E+00	

```
0.000E+00
0010  7439976    Mercury            1.000E+00   1.000E+00   1.000E+00   1.000E+00
1.000E+00
0011  7440020    Nickel             1.000E+00   1.000E+00   1.000E+00   1.000E+00
1.000E+00
0012  7782492    Selenium           1.000E+00   1.000E+00   0.000E+00   0.000E+00
0.000E+00
0013  7440666    Zinc               1.000E+00   1.000E+00   0.000E+00   0.000E+00
0.000E+00


AVERAGE DOSE BY PATHWAY (mg/(kg-d)) FOR CANCER CALCULATIONS
CHEM     INHAL     DERM     SOIL   MOTHER     FISH    WATER      VEG    DAIRY
BEEF    CHICK      PIG      EGG    TOTAL
0001  2.60E-04 0.00E+00 0.00E+00 0.00E+00 0.00E+00 0.00E+00 0.00E+00 0.00E+00
0.00E+00 0.00E+00 0.00E+00 0.00E+00 2.60E-04
0002  2.60E-04 0.00E+00 0.00E+00 0.00E+00 0.00E+00 0.00E+00 0.00E+00 0.00E+00
0.00E+00 0.00E+00 0.00E+00 0.00E+00 5.20E-04
0003  2.60E-04 0.00E+00 0.00E+00 0.00E+00 0.00E+00 0.00E+00 0.00E+00 0.00E+00
0.00E+00 0.00E+00 0.00E+00 0.00E+00 7.80E-04
0004  2.60E-04 0.00E+00 0.00E+00 0.00E+00 0.00E+00 0.00E+00 0.00E+00 0.00E+00
0.00E+00 0.00E+00 0.00E+00 0.00E+00 1.04E-03
0005  2.60E-04 0.00E+00 0.00E+00 0.00E+00 0.00E+00 0.00E+00 0.00E+00 0.00E+00
0.00E+00 0.00E+00 0.00E+00 0.00E+00 1.30E-03
0006  2.60E-04 0.00E+00 0.00E+00 0.00E+00 0.00E+00 0.00E+00 0.00E+00 0.00E+00
0.00E+00 0.00E+00 0.00E+00 0.00E+00 1.56E-03
0007  2.60E-04 0.00E+00 0.00E+00 0.00E+00 0.00E+00 0.00E+00 0.00E+00 0.00E+00
0.00E+00 0.00E+00 0.00E+00 0.00E+00 1.82E-03
0008  2.60E-04 0.00E+00 0.00E+00 0.00E+00 0.00E+00 0.00E+00 0.00E+00 0.00E+00
0.00E+00 0.00E+00 0.00E+00 0.00E+00 2.08E-03
0009  2.60E-04 0.00E+00 0.00E+00 0.00E+00 0.00E+00 0.00E+00 0.00E+00 0.00E+00
0.00E+00 0.00E+00 0.00E+00 0.00E+00 2.34E-03
0010  2.60E-04 0.00E+00 0.00E+00 0.00E+00 0.00E+00 0.00E+00 0.00E+00 0.00E+00
0.00E+00 0.00E+00 0.00E+00 0.00E+00 2.60E-03
0011  2.60E-04 0.00E+00 0.00E+00 0.00E+00 0.00E+00 0.00E+00 0.00E+00 0.00E+00
0.00E+00 0.00E+00 0.00E+00 0.00E+00 2.86E-03
0012  2.60E-04 0.00E+00 0.00E+00 0.00E+00 0.00E+00 0.00E+00 0.00E+00 0.00E+00
0.00E+00 0.00E+00 0.00E+00 0.00E+00 3.12E-03
0013  2.60E-04 0.00E+00 0.00E+00 0.00E+00 0.00E+00 0.00E+00 0.00E+00 0.00E+00
0.00E+00 0.00E+00 0.00E+00 0.00E+00 3.38E-03

AVERAGE CANCER RISK
CHEM     INHAL     DERM     SOIL   MOTHER     FISH    WATER      VEG    DAIRY
BEEF    CHICK      PIG      EGG     MEAT     ORAL    TOTAL
0001  2.86E-04 0.00E+00 0.00E+00 0.00E+00 0.00E+00 0.00E+00 0.00E+00 0.00E+00
0.00E+00 0.00E+00 0.00E+00 0.00E+00 0.00E+00 0.00E+00 2.86E-04
0002  3.12E-03 0.00E+00 0.00E+00 0.00E+00 0.00E+00 0.00E+00 0.00E+00 0.00E+00
0.00E+00 0.00E+00 0.00E+00 0.00E+00 0.00E+00 0.00E+00 3.12E-03
0003  2.18E-03 0.00E+00 0.00E+00 0.00E+00 0.00E+00 0.00E+00 0.00E+00 0.00E+00
0.00E+00 0.00E+00 0.00E+00 0.00E+00 0.00E+00 0.00E+00 2.18E-03
0004  3.90E-03 0.00E+00 0.00E+00 0.00E+00 0.00E+00 0.00E+00 0.00E+00 0.00E+00
0.00E+00 0.00E+00 0.00E+00 0.00E+00 0.00E+00 0.00E+00 3.90E-03
0005  0.00E+00 0.00E+00 0.00E+00 0.00E+00 0.00E+00 0.00E+00 0.00E+00 0.00E+00
0.00E+00 0.00E+00 0.00E+00 0.00E+00 0.00E+00 0.00E+00 0.00E+00
0006  0.00E+00 0.00E+00 0.00E+00 0.00E+00 0.00E+00 0.00E+00 0.00E+00 0.00E+00
0.00E+00 0.00E+00 0.00E+00 0.00E+00 0.00E+00 0.00E+00 0.00E+00
0007  0.00E+00 0.00E+00 0.00E+00 0.00E+00 0.00E+00 0.00E+00 0.00E+00 0.00E+00
0.00E+00 0.00E+00 0.00E+00 0.00E+00 0.00E+00 0.00E+00 0.00E+00
0008  1.09E-05 0.00E+00 0.00E+00 0.00E+00 0.00E+00 0.00E+00 0.00E+00 0.00E+00
0.00E+00 0.00E+00 0.00E+00 0.00E+00 0.00E+00 0.00E+00 1.09E-05
0009  0.00E+00 0.00E+00 0.00E+00 0.00E+00 0.00E+00 0.00E+00 0.00E+00 0.00E+00
0.00E+00 0.00E+00 0.00E+00 0.00E+00 0.00E+00 0.00E+00 0.00E+00
0010  0.00E+00 0.00E+00 0.00E+00 0.00E+00 0.00E+00 0.00E+00 0.00E+00 0.00E+00
```

```
0.00E+00 0.00E+00 0.00E+00 0.00E+00 0.00E+00 0.00E+00 0.00E+00
0011  2.36E-04 0.00E+00 0.00E+00 0.00E+00 0.00E+00 0.00E+00 0.00E+00 0.00E+00
0.00E+00 0.00E+00 0.00E+00 0.00E+00 0.00E+00 0.00E+00 2.36E-04
0012  0.00E+00 0.00E+00 0.00E+00 0.00E+00 0.00E+00 0.00E+00 0.00E+00 0.00E+00
0.00E+00 0.00E+00 0.00E+00 0.00E+00 0.00E+00 0.00E+00 0.00E+00
0013  0.00E+00 0.00E+00 0.00E+00 0.00E+00 0.00E+00 0.00E+00 0.00E+00 0.00E+00
0.00E+00 0.00E+00 0.00E+00 0.00E+00 0.00E+00 0.00E+00 0.00E+00
SUM   9.73E-03 0.00E+00 0.00E+00 0.00E+00 0.00E+00 0.00E+00 0.00E+00 0.00E+00
0.00E+00 0.00E+00 0.00E+00 0.00E+00 0.00E+00 0.00E+00 9.73E-03
```

SITE PARAMETERS

DEPOSITION

Deposition rate (m/s) 0.05

DRINKING WATER

*** Pathway disabled ***

FISH

*** Pathway disabled ***

PASTURE

*** Pathway disabled ***

HOME GROWN PRODUCE

*** Pathway disabled ***

PIGS, CHICKENS AND EGGS

*** Pathway disabled ***

DERMAL ABSORPTION

*** Pathway disabled ***

SOIL INGESTION

*** Pathway disabled ***

MOTHER'S MILK

*** Pathway disabled ***

This file: C:\HARP\PROJECTS\IEEC\Cancer_70yrAdult_HighPointEst.txt

Created by HARP Risk Module Version: 21.7.30
Creation date: 11/29/2004 9:24:30 AM

EXCEPTION REPORT
(there have been no changes or exceptions)

Point Estimate
GLC source: chemical cas 71432 deleted by user
Exposure Duration: 70 year (adult resident)
Analysis Method: High-end Point Estimate

CHEMICAL CROSS-REFERENCE TABLE

CHEM	CAS	ABBREVIATION	POLLUTANT NAME
0001	9901	DieselExhPM	Diesel engine exhaust, particulate matter
0002	7440382	Arsenic	Arsenic
0003	7440417	Beryllium	Beryllium
0004	7440439	Cadmium	Cadmium
0005	7440473	Chromium	Chromium
0006	7440508	Copper	Copper
0007	1073	Cyanide cmpds	Cyanide compounds
0008	7439921	Lead	Lead
0009	7439965	Manganese	Manganese
0010	7439976	Mercury	Mercury
0011	7440020	Nickel	Nickel
0012	7782492	Selenium	Selenium
0013	7440666	Zinc	Zinc

CHEMICAL GROUND LEVEL CONCENTRATIONS (micrograms/m^3)

CHEM	CAS	ABBREVIATION	AVERAGE	HOURLY MAX	WATER	PASTURE	FISH
0001	9901	DieselExhPM	1.000E+00	1.000E+00	0.000E+00	0.000E+00	0.000E+00
0002	7440382	Arsenic	1.000E+00	1.000E+00	1.000E+00	1.000E+00	1.000E+00
0003	7440417	Beryllium	1.000E+00	1.000E+00	1.000E+00	1.000E+00	1.000E+00
0004	7440439	Cadmium	1.000E+00	1.000E+00	1.000E+00	1.000E+00	1.000E+00
0005	7440473	Chromium	1.000E+00	1.000E+00	0.000E+00	0.000E+00	0.000E+00
0006	7440508	Copper	1.000E+00	1.000E+00	0.000E+00	0.000E+00	0.000E+00
0007	1073	Cyanide cmpds	1.000E+00	1.000E+00	0.000E+00	0.000E+00	0.000E+00
0008	7439921	Lead	1.000E+00	1.000E+00	1.000E+00	1.000E+00	1.000E+00
0009	7439965	Manganese	1.000E+00	1.000E+00	0.000E+00	0.000E+00	

```
0.000E+00
0010  7439976    Mercury            1.000E+00   1.000E+00   1.000E+00   1.000E+00
1.000E+00
0011  7440020    Nickel             1.000E+00   1.000E+00   1.000E+00   1.000E+00
1.000E+00
0012  7782492    Selenium           1.000E+00   1.000E+00   0.000E+00   0.000E+00
0.000E+00
0013  7440666    Zinc               1.000E+00   1.000E+00   0.000E+00   0.000E+00
0.000E+00


HIGH-END DOSE BY PATHWAY (mg/(kg-d)) FOR CANCER CALCULATIONS
CHEM     INHAL     DERM     SOIL   MOTHER     FISH    WATER      VEG    DAIRY
BEEF    CHICK      PIG      EGG    TOTAL
0001  3.77E-04 0.00E+00 0.00E+00 0.00E+00 0.00E+00 0.00E+00 0.00E+00 0.00E+00
0.00E+00 0.00E+00 0.00E+00 0.00E+00 3.77E-04
0002  3.77E-04 0.00E+00 0.00E+00 0.00E+00 0.00E+00 0.00E+00 0.00E+00 0.00E+00
0.00E+00 0.00E+00 0.00E+00 0.00E+00 7.54E-04
0003  3.77E-04 0.00E+00 0.00E+00 0.00E+00 0.00E+00 0.00E+00 0.00E+00 0.00E+00
0.00E+00 0.00E+00 0.00E+00 0.00E+00 1.13E-03
0004  3.77E-04 0.00E+00 0.00E+00 0.00E+00 0.00E+00 0.00E+00 0.00E+00 0.00E+00
0.00E+00 0.00E+00 0.00E+00 0.00E+00 1.51E-03
0005  3.77E-04 0.00E+00 0.00E+00 0.00E+00 0.00E+00 0.00E+00 0.00E+00 0.00E+00
0.00E+00 0.00E+00 0.00E+00 0.00E+00 1.88E-03
0006  3.77E-04 0.00E+00 0.00E+00 0.00E+00 0.00E+00 0.00E+00 0.00E+00 0.00E+00
0.00E+00 0.00E+00 0.00E+00 0.00E+00 2.26E-03
0007  3.77E-04 0.00E+00 0.00E+00 0.00E+00 0.00E+00 0.00E+00 0.00E+00 0.00E+00
0.00E+00 0.00E+00 0.00E+00 0.00E+00 2.64E-03
0008  3.77E-04 0.00E+00 0.00E+00 0.00E+00 0.00E+00 0.00E+00 0.00E+00 0.00E+00
0.00E+00 0.00E+00 0.00E+00 0.00E+00 3.01E-03
0009  3.77E-04 0.00E+00 0.00E+00 0.00E+00 0.00E+00 0.00E+00 0.00E+00 0.00E+00
0.00E+00 0.00E+00 0.00E+00 0.00E+00 3.39E-03
0010  3.77E-04 0.00E+00 0.00E+00 0.00E+00 0.00E+00 0.00E+00 0.00E+00 0.00E+00
0.00E+00 0.00E+00 0.00E+00 0.00E+00 3.77E-03
0011  3.77E-04 0.00E+00 0.00E+00 0.00E+00 0.00E+00 0.00E+00 0.00E+00 0.00E+00
0.00E+00 0.00E+00 0.00E+00 0.00E+00 4.15E-03
0012  3.77E-04 0.00E+00 0.00E+00 0.00E+00 0.00E+00 0.00E+00 0.00E+00 0.00E+00
0.00E+00 0.00E+00 0.00E+00 0.00E+00 4.52E-03
0013  3.77E-04 0.00E+00 0.00E+00 0.00E+00 0.00E+00 0.00E+00 0.00E+00 0.00E+00
0.00E+00 0.00E+00 0.00E+00 0.00E+00 4.90E-03

HIGH-END CANCER RISK
CHEM     INHAL     DERM     SOIL   MOTHER     FISH    WATER      VEG    DAIRY
BEEF    CHICK      PIG      EGG     MEAT     ORAL    TOTAL
0001  4.15E-04 0.00E+00 0.00E+00 0.00E+00 0.00E+00 0.00E+00 0.00E+00 0.00E+00
0.00E+00 0.00E+00 0.00E+00 0.00E+00 0.00E+00 0.00E+00 4.15E-04
0002  4.52E-03 0.00E+00 0.00E+00 0.00E+00 0.00E+00 0.00E+00 0.00E+00 0.00E+00
0.00E+00 0.00E+00 0.00E+00 0.00E+00 0.00E+00 0.00E+00 4.52E-03
0003  3.17E-03 0.00E+00 0.00E+00 0.00E+00 0.00E+00 0.00E+00 0.00E+00 0.00E+00
0.00E+00 0.00E+00 0.00E+00 0.00E+00 0.00E+00 0.00E+00 3.17E-03
0004  5.65E-03 0.00E+00 0.00E+00 0.00E+00 0.00E+00 0.00E+00 0.00E+00 0.00E+00
0.00E+00 0.00E+00 0.00E+00 0.00E+00 0.00E+00 0.00E+00 5.65E-03
0005  0.00E+00 0.00E+00 0.00E+00 0.00E+00 0.00E+00 0.00E+00 0.00E+00 0.00E+00
0.00E+00 0.00E+00 0.00E+00 0.00E+00 0.00E+00 0.00E+00 0.00E+00
0006  0.00E+00 0.00E+00 0.00E+00 0.00E+00 0.00E+00 0.00E+00 0.00E+00 0.00E+00
0.00E+00 0.00E+00 0.00E+00 0.00E+00 0.00E+00 0.00E+00 0.00E+00
0007  0.00E+00 0.00E+00 0.00E+00 0.00E+00 0.00E+00 0.00E+00 0.00E+00 0.00E+00
0.00E+00 0.00E+00 0.00E+00 0.00E+00 0.00E+00 0.00E+00 0.00E+00
0008  1.58E-05 0.00E+00 0.00E+00 0.00E+00 0.00E+00 0.00E+00 0.00E+00 0.00E+00
0.00E+00 0.00E+00 0.00E+00 0.00E+00 0.00E+00 0.00E+00 1.58E-05
0009  0.00E+00 0.00E+00 0.00E+00 0.00E+00 0.00E+00 0.00E+00 0.00E+00 0.00E+00
0.00E+00 0.00E+00 0.00E+00 0.00E+00 0.00E+00 0.00E+00 0.00E+00
0010  0.00E+00 0.00E+00 0.00E+00 0.00E+00 0.00E+00 0.00E+00 0.00E+00 0.00E+00
```

```
0.00E+00 0.00E+00 0.00E+00 0.00E+00 0.00E+00 0.00E+00 0.00E+00
0011  3.43E-04 0.00E+00 0.00E+00 0.00E+00 0.00E+00 0.00E+00 0.00E+00 0.00E+00
0.00E+00 0.00E+00 0.00E+00 0.00E+00 0.00E+00 0.00E+00 3.43E-04
0012  0.00E+00 0.00E+00 0.00E+00 0.00E+00 0.00E+00 0.00E+00 0.00E+00 0.00E+00
0.00E+00 0.00E+00 0.00E+00 0.00E+00 0.00E+00 0.00E+00 0.00E+00
0013  0.00E+00 0.00E+00 0.00E+00 0.00E+00 0.00E+00 0.00E+00 0.00E+00 0.00E+00
0.00E+00 0.00E+00 0.00E+00 0.00E+00 0.00E+00 0.00E+00 0.00E+00
SUM   1.41E-02 0.00E+00 0.00E+00 0.00E+00 0.00E+00 0.00E+00 0.00E+00 0.00E+00
0.00E+00 0.00E+00 0.00E+00 0.00E+00 0.00E+00 0.00E+00 1.41E-02
```

SITE PARAMETERS

DEPOSITION

Deposition rate (m/s) 0.05

DRINKING WATER

*** Pathway disabled ***

FISH

*** Pathway disabled ***

PASTURE

*** Pathway disabled ***

HOME GROWN PRODUCE

*** Pathway disabled ***

PIGS, CHICKENS AND EGGS

*** Pathway disabled ***

DERMAL ABSORPTION

*** Pathway disabled ***

SOIL INGESTION

*** Pathway disabled ***

MOTHER'S MILK

*** Pathway disabled ***

This file: C:\HARP\PROJECTS\IEEC\Cancer_70yrAdult_DerivedAdj.txt

Created by HARP Risk Module Version: 21.7.30
Creation date: 11/29/2004 9:26:03 AM

EXCEPTION REPORT
(there have been no changes or exceptions)

Point Estimate
GLC source: chemical cas 71432 deleted by user
Exposure Duration: 70 year (adult resident)
Analysis Method: Derived (Adjusted) Method

CHEMICAL CROSS-REFERENCE TABLE

CHEM	CAS	ABBREVIATION	POLLUTANT NAME
0001	9901	DieselExhPM	Diesel engine exhaust, particulate matter
0002	7440382	Arsenic	Arsenic
0003	7440417	Beryllium	Beryllium
0004	7440439	Cadmium	Cadmium
0005	7440473	Chromium	Chromium
0006	7440508	Copper	Copper
0007	1073	Cyanide cmpds	Cyanide compounds
0008	7439921	Lead	Lead
0009	7439965	Manganese	Manganese
0010	7439976	Mercury	Mercury
0011	7440020	Nickel	Nickel
0012	7782492	Selenium	Selenium
0013	7440666	Zinc	Zinc

CHEMICAL GROUND LEVEL CONCENTRATIONS (micrograms/m^3)

CHEM	CAS	ABBREVIATION	AVERAGE	HOURLY MAX	WATER	PASTURE	FISH
0001	9901	DieselExhPM	1.000E+00	1.000E+00	0.000E+00	0.000E+00	0.000E+00
0002	7440382	Arsenic	1.000E+00	1.000E+00	1.000E+00	1.000E+00	1.000E+00
0003	7440417	Beryllium	1.000E+00	1.000E+00	1.000E+00	1.000E+00	1.000E+00
0004	7440439	Cadmium	1.000E+00	1.000E+00	1.000E+00	1.000E+00	1.000E+00
0005	7440473	Chromium	1.000E+00	1.000E+00	0.000E+00	0.000E+00	0.000E+00
0006	7440508	Copper	1.000E+00	1.000E+00	0.000E+00	0.000E+00	0.000E+00
0007	1073	Cyanide cmpds	1.000E+00	1.000E+00	0.000E+00	0.000E+00	0.000E+00
0008	7439921	Lead	1.000E+00	1.000E+00	1.000E+00	1.000E+00	1.000E+00
0009	7439965	Manganese	1.000E+00	1.000E+00	0.000E+00	0.000E+00	

```
0.000E+00
0010  7439976    Mercury            1.000E+00   1.000E+00   1.000E+00   1.000E+00
1.000E+00
0011  7440020    Nickel             1.000E+00   1.000E+00   1.000E+00   1.000E+00
1.000E+00
0012  7782492    Selenium           1.000E+00   1.000E+00   0.000E+00   0.000E+00
0.000E+00
0013  7440666    Zinc               1.000E+00   1.000E+00   0.000E+00   0.000E+00
0.000E+00


DOMINANT PATHWAYS FOR CANCER
CHEM     INHAL     DERM     SOIL   MOTHER     FISH    WATER      VEG    DAIRY
BEEF    CHICK      PIG      EGG
0001         A        -        -        -        -        -        -        -
-        -        -        -
0002         A        -        -        -        -        -        -        -
-        -        -        -
0003         A        -        -        -        -        -        -        -
-        -        -        -
0004         A        -        -        -        -        -        -        -
-        -        -        -
0005         -        -        -        -        -        -        -        -
-        -        -        -
0006         -        -        -        -        -        -        -        -
-        -        -        -
0007         -        -        -        -        -        -        -        -
-        -        -        -
0008         A        -        -        -        -        -        -        -
-        -        -        -
0009         -        -        -        -        -        -        -        -
-        -        -        -
0010         -        -        -        -        -        -        -        -
-        -        -        -
0011         A        -        -        -        -        -        -        -
-        -        -        -
0012         -        -        -        -        -        -        -        -
-        -        -        -
0013         -        -        -        -        -        -        -        -
-        -        -        -

DERIVED DOSE BY PATHWAY (mg/(kg-d)) FOR CANCER CALCULATIONS
CHEM     INHAL     DERM     SOIL   MOTHER     FISH    WATER      VEG    DAIRY
BEEF    CHICK      PIG      EGG    TOTAL
0001  2.90E-04 0.00E+00 0.00E+00 0.00E+00 0.00E+00 0.00E+00 0.00E+00 0.00E+00
0.00E+00 0.00E+00 0.00E+00 0.00E+00 2.90E-04
0002  2.90E-04 0.00E+00 0.00E+00 0.00E+00 0.00E+00 0.00E+00 0.00E+00 0.00E+00
0.00E+00 0.00E+00 0.00E+00 0.00E+00 5.79E-04
0003  2.90E-04 0.00E+00 0.00E+00 0.00E+00 0.00E+00 0.00E+00 0.00E+00 0.00E+00
0.00E+00 0.00E+00 0.00E+00 0.00E+00 8.69E-04
0004  2.90E-04 0.00E+00 0.00E+00 0.00E+00 0.00E+00 0.00E+00 0.00E+00 0.00E+00
0.00E+00 0.00E+00 0.00E+00 0.00E+00 1.16E-03
0005  2.60E-04 0.00E+00 0.00E+00 0.00E+00 0.00E+00 0.00E+00 0.00E+00 0.00E+00
0.00E+00 0.00E+00 0.00E+00 0.00E+00 1.42E-03
0006  2.60E-04 0.00E+00 0.00E+00 0.00E+00 0.00E+00 0.00E+00 0.00E+00 0.00E+00
0.00E+00 0.00E+00 0.00E+00 0.00E+00 1.68E-03
0007  2.60E-04 0.00E+00 0.00E+00 0.00E+00 0.00E+00 0.00E+00 0.00E+00 0.00E+00
0.00E+00 0.00E+00 0.00E+00 0.00E+00 1.94E-03
0008  2.90E-04 0.00E+00 0.00E+00 0.00E+00 0.00E+00 0.00E+00 0.00E+00 0.00E+00
0.00E+00 0.00E+00 0.00E+00 0.00E+00 2.23E-03
0009  2.60E-04 0.00E+00 0.00E+00 0.00E+00 0.00E+00 0.00E+00 0.00E+00 0.00E+00
0.00E+00 0.00E+00 0.00E+00 0.00E+00 2.49E-03
0010  2.60E-04 0.00E+00 0.00E+00 0.00E+00 0.00E+00 0.00E+00 0.00E+00 0.00E+00
```

0.00E+00 0.00E+00 0.00E+00 0.00E+00 2.75E-03
0011 2.90E-04 0.00E+00 0.00E+00 0.00E+00 0.00E+00 0.00E+00 0.00E+00 0.00E+00
0.00E+00 0.00E+00 0.00E+00 0.00E+00 3.04E-03
0012 2.60E-04 0.00E+00 0.00E+00 0.00E+00 0.00E+00 0.00E+00 0.00E+00 0.00E+00
0.00E+00 0.00E+00 0.00E+00 0.00E+00 3.30E-03
0013 2.60E-04 0.00E+00 0.00E+00 0.00E+00 0.00E+00 0.00E+00 0.00E+00 0.00E+00
0.00E+00 0.00E+00 0.00E+00 0.00E+00 3.56E-03

DERIVED CANCER RISK
CHEM INHAL DERM SOIL MOTHER FISH WATER VEG DAIRY
BEEF CHICK PIG EGG MEAT ORAL TOTAL
0001 3.19E-04 0.00E+00 0.00E+00 0.00E+00 0.00E+00 0.00E+00 0.00E+00 0.00E+00
0.00E+00 0.00E+00 0.00E+00 0.00E+00 0.00E+00 0.00E+00 3.19E-04
0002 3.48E-03 0.00E+00 0.00E+00 0.00E+00 0.00E+00 0.00E+00 0.00E+00 0.00E+00
0.00E+00 0.00E+00 0.00E+00 0.00E+00 0.00E+00 0.00E+00 3.48E-03
0003 2.43E-03 0.00E+00 0.00E+00 0.00E+00 0.00E+00 0.00E+00 0.00E+00 0.00E+00
0.00E+00 0.00E+00 0.00E+00 0.00E+00 0.00E+00 0.00E+00 2.43E-03
0004 4.34E-03 0.00E+00 0.00E+00 0.00E+00 0.00E+00 0.00E+00 0.00E+00 0.00E+00
0.00E+00 0.00E+00 0.00E+00 0.00E+00 0.00E+00 0.00E+00 4.34E-03
0005 0.00E+00 0.00E+00 0.00E+00 0.00E+00 0.00E+00 0.00E+00 0.00E+00 0.00E+00
0.00E+00 0.00E+00 0.00E+00 0.00E+00 0.00E+00 0.00E+00 0.00E+00
0006 0.00E+00 0.00E+00 0.00E+00 0.00E+00 0.00E+00 0.00E+00 0.00E+00 0.00E+00
0.00E+00 0.00E+00 0.00E+00 0.00E+00 0.00E+00 0.00E+00 0.00E+00
0007 0.00E+00 0.00E+00 0.00E+00 0.00E+00 0.00E+00 0.00E+00 0.00E+00 0.00E+00
0.00E+00 0.00E+00 0.00E+00 0.00E+00 0.00E+00 0.00E+00 0.00E+00
0008 1.22E-05 0.00E+00 0.00E+00 0.00E+00 0.00E+00 0.00E+00 0.00E+00 0.00E+00
0.00E+00 0.00E+00 0.00E+00 0.00E+00 0.00E+00 0.00E+00 1.22E-05
0009 0.00E+00 0.00E+00 0.00E+00 0.00E+00 0.00E+00 0.00E+00 0.00E+00 0.00E+00
0.00E+00 0.00E+00 0.00E+00 0.00E+00 0.00E+00 0.00E+00 0.00E+00
0010 0.00E+00 0.00E+00 0.00E+00 0.00E+00 0.00E+00 0.00E+00 0.00E+00 0.00E+00
0.00E+00 0.00E+00 0.00E+00 0.00E+00 0.00E+00 0.00E+00 0.00E+00
0011 2.64E-04 0.00E+00 0.00E+00 0.00E+00 0.00E+00 0.00E+00 0.00E+00 0.00E+00
0.00E+00 0.00E+00 0.00E+00 0.00E+00 0.00E+00 0.00E+00 2.64E-04
0012 0.00E+00 0.00E+00 0.00E+00 0.00E+00 0.00E+00 0.00E+00 0.00E+00 0.00E+00
0.00E+00 0.00E+00 0.00E+00 0.00E+00 0.00E+00 0.00E+00 0.00E+00
0013 0.00E+00 0.00E+00 0.00E+00 0.00E+00 0.00E+00 0.00E+00 0.00E+00 0.00E+00
0.00E+00 0.00E+00 0.00E+00 0.00E+00 0.00E+00 0.00E+00 0.00E+00
SUM 1.08E-02 0.00E+00 0.00E+00 0.00E+00 0.00E+00 0.00E+00 0.00E+00 0.00E+00
0.00E+00 0.00E+00 0.00E+00 0.00E+00 0.00E+00 0.00E+00 1.08E-02

SITE PARAMETERS

DEPOSITION

Deposition rate (m/s) 0.05

DRINKING WATER

*** Pathway disabled ***

FISH

*** Pathway disabled ***

PASTURE

*** Pathway disabled ***

HOME GROWN PRODUCE

*** Pathway disabled ***

PIGS, CHICKENS AND EGGS

*** Pathway disabled ***

DERMAL ABSORPTION

*** Pathway disabled ***

SOIL INGESTION

*** Pathway disabled ***

MOTHER'S MILK

*** Pathway disabled ***

This file: C:\HARP\PROJECTS\IEEC\Cancer_Worker_PointEst.txt

Created by HARP Risk Module Version: 21.7.30
Creation date: 11/29/2004 9:22:06 AM

EXCEPTION REPORT
(there have been no changes or exceptions)

Point Estimate
GLC source: chemical cas 71432 deleted by user
Exposure Duration: Standard work schedule (49 wks/yr, 5 days/wk, 8 hrs/day, 40 yrs)
Analysis Method: Point estimate

CHEMICAL CROSS-REFERENCE TABLE

CHEM	CAS	ABBREVIATION	POLLUTANT NAME
0001	9901	DieselExhPM	Diesel engine exhaust, particulate matter
0002	7440382	Arsenic	Arsenic
0003	7440417	Beryllium	Beryllium
0004	7440439	Cadmium	Cadmium
0005	7440473	Chromium	Chromium
0006	7440508	Copper	Copper
0007	1073	Cyanide cmpds	Cyanide compounds
0008	7439921	Lead	Lead
0009	7439965	Manganese	Manganese
0010	7439976	Mercury	Mercury
0011	7440020	Nickel	Nickel
0012	7782492	Selenium	Selenium
0013	7440666	Zinc	Zinc

CHEMICAL GROUND LEVEL CONCENTRATIONS (micrograms/m^3)

CHEM	CAS	ABBREVIATION	AVERAGE	HOURLY MAX	WATER	PASTURE	FISH
0001	9901	DieselExhPM	1.000E+00	1.000E+00	0.000E+00	0.000E+00	0.000E+00
0002	7440382	Arsenic	1.000E+00	1.000E+00	1.000E+00	1.000E+00	1.000E+00
0003	7440417	Beryllium	1.000E+00	1.000E+00	1.000E+00	1.000E+00	1.000E+00
0004	7440439	Cadmium	1.000E+00	1.000E+00	1.000E+00	1.000E+00	1.000E+00
0005	7440473	Chromium	1.000E+00	1.000E+00	0.000E+00	0.000E+00	0.000E+00
0006	7440508	Copper	1.000E+00	1.000E+00	0.000E+00	0.000E+00	0.000E+00
0007	1073	Cyanide cmpds	1.000E+00	1.000E+00	0.000E+00	0.000E+00	0.000E+00
0008	7439921	Lead	1.000E+00	1.000E+00	1.000E+00	1.000E+00	1.000E+00
0009	7439965	Manganese	1.000E+00	1.000E+00	0.000E+00	0.000E+00	

```
0.000E+00
0010  7439976    Mercury            1.000E+00   1.000E+00   1.000E+00   1.000E+00
1.000E+00
0011  7440020    Nickel             1.000E+00   1.000E+00   1.000E+00   1.000E+00
1.000E+00
0012  7782492    Selenium           1.000E+00   1.000E+00   0.000E+00   0.000E+00
0.000E+00
0013  7440666    Zinc               1.000E+00   1.000E+00   0.000E+00   0.000E+00
0.000E+00


AVERAGE DOSE BY PATHWAY (mg/(kg-d)) FOR CANCER CALCULATIONS
CHEM     INHAL     DERM     SOIL   MOTHER     FISH    WATER      VEG    DAIRY
BEEF    CHICK      PIG      EGG    TOTAL
0001  5.72E-05 0.00E+00 0.00E+00 0.00E+00 0.00E+00 0.00E+00 0.00E+00 0.00E+00
0.00E+00 0.00E+00 0.00E+00 0.00E+00 5.72E-05
0002  5.72E-05 0.00E+00 0.00E+00 0.00E+00 0.00E+00 0.00E+00 0.00E+00 0.00E+00
0.00E+00 0.00E+00 0.00E+00 0.00E+00 1.14E-04
0003  5.72E-05 0.00E+00 0.00E+00 0.00E+00 0.00E+00 0.00E+00 0.00E+00 0.00E+00
0.00E+00 0.00E+00 0.00E+00 0.00E+00 1.71E-04
0004  5.72E-05 0.00E+00 0.00E+00 0.00E+00 0.00E+00 0.00E+00 0.00E+00 0.00E+00
0.00E+00 0.00E+00 0.00E+00 0.00E+00 2.29E-04
0005  5.72E-05 0.00E+00 0.00E+00 0.00E+00 0.00E+00 0.00E+00 0.00E+00 0.00E+00
0.00E+00 0.00E+00 0.00E+00 0.00E+00 2.86E-04
0006  5.72E-05 0.00E+00 0.00E+00 0.00E+00 0.00E+00 0.00E+00 0.00E+00 0.00E+00
0.00E+00 0.00E+00 0.00E+00 0.00E+00 3.43E-04
0007  5.72E-05 0.00E+00 0.00E+00 0.00E+00 0.00E+00 0.00E+00 0.00E+00 0.00E+00
0.00E+00 0.00E+00 0.00E+00 0.00E+00 4.00E-04
0008  5.72E-05 0.00E+00 0.00E+00 0.00E+00 0.00E+00 0.00E+00 0.00E+00 0.00E+00
0.00E+00 0.00E+00 0.00E+00 0.00E+00 4.57E-04
0009  5.72E-05 0.00E+00 0.00E+00 0.00E+00 0.00E+00 0.00E+00 0.00E+00 0.00E+00
0.00E+00 0.00E+00 0.00E+00 0.00E+00 5.14E-04
0010  5.72E-05 0.00E+00 0.00E+00 0.00E+00 0.00E+00 0.00E+00 0.00E+00 0.00E+00
0.00E+00 0.00E+00 0.00E+00 0.00E+00 5.72E-04
0011  5.72E-05 0.00E+00 0.00E+00 0.00E+00 0.00E+00 0.00E+00 0.00E+00 0.00E+00
0.00E+00 0.00E+00 0.00E+00 0.00E+00 6.29E-04
0012  5.72E-05 0.00E+00 0.00E+00 0.00E+00 0.00E+00 0.00E+00 0.00E+00 0.00E+00
0.00E+00 0.00E+00 0.00E+00 0.00E+00 6.86E-04
0013  5.72E-05 0.00E+00 0.00E+00 0.00E+00 0.00E+00 0.00E+00 0.00E+00 0.00E+00
0.00E+00 0.00E+00 0.00E+00 0.00E+00 7.43E-04

AVERAGE CANCER RISK
CHEM     INHAL     DERM     SOIL   MOTHER     FISH    WATER      VEG    DAIRY
BEEF    CHICK      PIG      EGG     MEAT     ORAL    TOTAL
0001  6.29E-05 0.00E+00 0.00E+00 0.00E+00 0.00E+00 0.00E+00 0.00E+00 0.00E+00
0.00E+00 0.00E+00 0.00E+00 0.00E+00 0.00E+00 0.00E+00 6.29E-05
0002  6.86E-04 0.00E+00 0.00E+00 0.00E+00 0.00E+00 0.00E+00 0.00E+00 0.00E+00
0.00E+00 0.00E+00 0.00E+00 0.00E+00 0.00E+00 0.00E+00 6.86E-04
0003  4.80E-04 0.00E+00 0.00E+00 0.00E+00 0.00E+00 0.00E+00 0.00E+00 0.00E+00
0.00E+00 0.00E+00 0.00E+00 0.00E+00 0.00E+00 0.00E+00 4.80E-04
0004  8.57E-04 0.00E+00 0.00E+00 0.00E+00 0.00E+00 0.00E+00 0.00E+00 0.00E+00
0.00E+00 0.00E+00 0.00E+00 0.00E+00 0.00E+00 0.00E+00 8.57E-04
0005  0.00E+00 0.00E+00 0.00E+00 0.00E+00 0.00E+00 0.00E+00 0.00E+00 0.00E+00
0.00E+00 0.00E+00 0.00E+00 0.00E+00 0.00E+00 0.00E+00 0.00E+00
0006  0.00E+00 0.00E+00 0.00E+00 0.00E+00 0.00E+00 0.00E+00 0.00E+00 0.00E+00
0.00E+00 0.00E+00 0.00E+00 0.00E+00 0.00E+00 0.00E+00 0.00E+00
0007  0.00E+00 0.00E+00 0.00E+00 0.00E+00 0.00E+00 0.00E+00 0.00E+00 0.00E+00
0.00E+00 0.00E+00 0.00E+00 0.00E+00 0.00E+00 0.00E+00 0.00E+00
0008  2.40E-06 0.00E+00 0.00E+00 0.00E+00 0.00E+00 0.00E+00 0.00E+00 0.00E+00
0.00E+00 0.00E+00 0.00E+00 0.00E+00 0.00E+00 0.00E+00 2.40E-06
0009  0.00E+00 0.00E+00 0.00E+00 0.00E+00 0.00E+00 0.00E+00 0.00E+00 0.00E+00
0.00E+00 0.00E+00 0.00E+00 0.00E+00 0.00E+00 0.00E+00 0.00E+00
0010  0.00E+00 0.00E+00 0.00E+00 0.00E+00 0.00E+00 0.00E+00 0.00E+00 0.00E+00
```

```
0.00E+00 0.00E+00 0.00E+00 0.00E+00 0.00E+00 0.00E+00 0.00E+00
0011  5.20E-05 0.00E+00 0.00E+00 0.00E+00 0.00E+00 0.00E+00 0.00E+00 0.00E+00
0.00E+00 0.00E+00 0.00E+00 0.00E+00 0.00E+00 0.00E+00 5.20E-05
0012  0.00E+00 0.00E+00 0.00E+00 0.00E+00 0.00E+00 0.00E+00 0.00E+00 0.00E+00
0.00E+00 0.00E+00 0.00E+00 0.00E+00 0.00E+00 0.00E+00 0.00E+00
0013  0.00E+00 0.00E+00 0.00E+00 0.00E+00 0.00E+00 0.00E+00 0.00E+00 0.00E+00
0.00E+00 0.00E+00 0.00E+00 0.00E+00 0.00E+00 0.00E+00 0.00E+00
SUM   2.14E-03 0.00E+00 0.00E+00 0.00E+00 0.00E+00 0.00E+00 0.00E+00 0.00E+00
0.00E+00 0.00E+00 0.00E+00 0.00E+00 0.00E+00 0.00E+00 2.14E-03


SITE PARAMETERS

DEPOSITION

   Deposition rate (m/s)             0.05

DRINKING WATER

*** Pathway disabled ***

FISH

*** Pathway disabled ***

PASTURE

*** Pathway disabled ***

HOME GROWN PRODUCE

*** Pathway disabled ***

PIGS, CHICKENS AND EGGS

*** Pathway disabled ***

DERMAL ABSORPTION

*** Pathway disabled ***

SOIL INGESTION

*** Pathway disabled ***

MOTHER'S MILK

*** Pathway disabled ***
```

This file: C:\HARP\PROJECTS\IEEC\Chronic_Res_OEHHA.txt

Created by HARP Risk Module Version: 21.7.30
Creation date: 11/29/2004 9:19:54 AM

EXCEPTION REPORT
(there have been no changes or exceptions)

Point Estimate
GLC source: chemical cas 71432 deleted by user
Exposure Duration: resident
Analysis Method: High-end Point Estimate

CHEMICAL CROSS-REFERENCE TABLE

CHEM	CAS	ABBREVIATION	POLLUTANT NAME
0001	9901	DieselExhPM	Diesel engine exhaust, particulate matter
0002	7440382	Arsenic	Arsenic
0003	7440417	Beryllium	Beryllium
0004	7440439	Cadmium	Cadmium
0005	7440473	Chromium	Chromium
0006	7440508	Copper	Copper
0007	1073	Cyanide cmpds	Cyanide compounds
0008	7439921	Lead	Lead
0009	7439965	Manganese	Manganese
0010	7439976	Mercury	Mercury
0011	7440020	Nickel	Nickel
0012	7782492	Selenium	Selenium
0013	7440666	Zinc	Zinc

CHEMICAL GROUND LEVEL CONCENTRATIONS (micrograms/m^3)

CHEM	CAS	ABBREVIATION	AVERAGE	HOURLY MAX	WATER	PASTURE	FISH
0001	9901	DieselExhPM	1.000E+00	1.000E+00	0.000E+00	0.000E+00	0.000E+00
0002	7440382	Arsenic	1.000E+00	1.000E+00	1.000E+00	1.000E+00	1.000E+00
0003	7440417	Beryllium	1.000E+00	1.000E+00	1.000E+00	1.000E+00	1.000E+00
0004	7440439	Cadmium	1.000E+00	1.000E+00	1.000E+00	1.000E+00	1.000E+00
0005	7440473	Chromium	1.000E+00	1.000E+00	0.000E+00	0.000E+00	0.000E+00
0006	7440508	Copper	1.000E+00	1.000E+00	0.000E+00	0.000E+00	0.000E+00
0007	1073	Cyanide cmpds	1.000E+00	1.000E+00	0.000E+00	0.000E+00	0.000E+00
0008	7439921	Lead	1.000E+00	1.000E+00	1.000E+00	1.000E+00	1.000E+00
0009	7439965	Manganese	1.000E+00	1.000E+00	0.000E+00	0.000E+00	

```
0.000E+00
0010  7439976    Mercury            1.000E+00   1.000E+00   1.000E+00   1.000E+00
1.000E+00
0011  7440020    Nickel             1.000E+00   1.000E+00   1.000E+00   1.000E+00
1.000E+00
0012  7782492    Selenium           1.000E+00   1.000E+00   0.000E+00   0.000E+00
0.000E+00
0013  7440666    Zinc               1.000E+00   1.000E+00   0.000E+00   0.000E+00
0.000E+00


INHALATION CONCENTRATION (ug/m^3) AND HIGH-END DOSE BY PATHWAY (mg/(kg-d)) FOR
CHRONIC CALCULATIONS
CHEM     INHAL     DERM     SOIL   MOTHER     FISH    WATER      VEG    DAIRY
BEEF    CHICK      PIG      EGG
0001  1.00E+00 0.00E+00 0.00E+00 0.00E+00 0.00E+00 0.00E+00 0.00E+00 0.00E+00
0.00E+00 0.00E+00 0.00E+00 0.00E+00
0002  1.00E+00 0.00E+00 0.00E+00 0.00E+00 0.00E+00 0.00E+00 0.00E+00 0.00E+00
0.00E+00 0.00E+00 0.00E+00 0.00E+00
0003  1.00E+00 0.00E+00 0.00E+00 0.00E+00 0.00E+00 0.00E+00 0.00E+00 0.00E+00
0.00E+00 0.00E+00 0.00E+00 0.00E+00
0004  1.00E+00 0.00E+00 0.00E+00 0.00E+00 0.00E+00 0.00E+00 0.00E+00 0.00E+00
0.00E+00 0.00E+00 0.00E+00 0.00E+00
0005  1.00E+00 0.00E+00 0.00E+00 0.00E+00 0.00E+00 0.00E+00 0.00E+00 0.00E+00
0.00E+00 0.00E+00 0.00E+00 0.00E+00
0006  1.00E+00 0.00E+00 0.00E+00 0.00E+00 0.00E+00 0.00E+00 0.00E+00 0.00E+00
0.00E+00 0.00E+00 0.00E+00 0.00E+00
0007  1.00E+00 0.00E+00 0.00E+00 0.00E+00 0.00E+00 0.00E+00 0.00E+00 0.00E+00
0.00E+00 0.00E+00 0.00E+00 0.00E+00
0008  1.00E+00 0.00E+00 0.00E+00 0.00E+00 0.00E+00 0.00E+00 0.00E+00 0.00E+00
0.00E+00 0.00E+00 0.00E+00 0.00E+00
0009  1.00E+00 0.00E+00 0.00E+00 0.00E+00 0.00E+00 0.00E+00 0.00E+00 0.00E+00
0.00E+00 0.00E+00 0.00E+00 0.00E+00
0010  1.00E+00 0.00E+00 0.00E+00 0.00E+00 0.00E+00 0.00E+00 0.00E+00 0.00E+00
0.00E+00 0.00E+00 0.00E+00 0.00E+00
0011  1.00E+00 0.00E+00 0.00E+00 0.00E+00 0.00E+00 0.00E+00 0.00E+00 0.00E+00
0.00E+00 0.00E+00 0.00E+00 0.00E+00
0012  1.00E+00 0.00E+00 0.00E+00 0.00E+00 0.00E+00 0.00E+00 0.00E+00 0.00E+00
0.00E+00 0.00E+00 0.00E+00 0.00E+00
0013  1.00E+00 0.00E+00 0.00E+00 0.00E+00 0.00E+00 0.00E+00 0.00E+00 0.00E+00
0.00E+00 0.00E+00 0.00E+00 0.00E+00

HIGH-END CHRONIC HI
CHEM         CV       CNS      BONE     DEVEL      ENDO       EYE      GILV     IMMUN
KIDN     REPRO      RESP      SKIN     BLOOD       MAX
0001  0.00E+00 0.00E+00 0.00E+00 0.00E+00 0.00E+00 0.00E+00 0.00E+00 0.00E+00
0.00E+00 0.00E+00 2.00E-01 0.00E+00 0.00E+00 2.00E-01
0002  3.33E+01 3.33E+01 0.00E+00 3.33E+01 0.00E+00 0.00E+00 0.00E+00 0.00E+00
0.00E+00 0.00E+00 0.00E+00 0.00E+00 0.00E+00 3.33E+01
0003  0.00E+00 0.00E+00 0.00E+00 0.00E+00 0.00E+00 0.00E+00 0.00E+00 1.43E+02
0.00E+00 0.00E+00 0.00E+00 0.00E+00 0.00E+00 1.43E+02
0004  0.00E+00 0.00E+00 0.00E+00 0.00E+00 0.00E+00 0.00E+00 0.00E+00 0.00E+00
5.00E+01 0.00E+00 5.00E+01 0.00E+00 0.00E+00 5.00E+01
0005  0.00E+00 0.00E+00 0.00E+00 0.00E+00 0.00E+00 0.00E+00 0.00E+00 0.00E+00
0.00E+00 0.00E+00 0.00E+00 0.00E+00 0.00E+00 1.00E-30
0006  0.00E+00 0.00E+00 0.00E+00 0.00E+00 0.00E+00 0.00E+00 0.00E+00 0.00E+00
0.00E+00 0.00E+00 4.17E-01 0.00E+00 0.00E+00 4.17E-01
0007  1.11E-01 1.11E-01 0.00E+00 0.00E+00 1.11E-01 0.00E+00 0.00E+00 0.00E+00
0.00E+00 0.00E+00 0.00E+00 0.00E+00 0.00E+00 1.11E-01
0008  0.00E+00 0.00E+00 0.00E+00 0.00E+00 0.00E+00 0.00E+00 0.00E+00 0.00E+00
0.00E+00 0.00E+00 0.00E+00 0.00E+00 0.00E+00 1.00E-30
0009  0.00E+00 5.00E+00 0.00E+00 0.00E+00 0.00E+00 0.00E+00 0.00E+00 0.00E+00
0.00E+00 0.00E+00 0.00E+00 0.00E+00 0.00E+00 5.00E+00
```

```
0010  0.00E+00 1.11E+01 0.00E+00 0.00E+00 0.00E+00 0.00E+00 0.00E+00 0.00E+00
0.00E+00 0.00E+00 0.00E+00 0.00E+00 0.00E+00 1.11E+01
0011  0.00E+00 0.00E+00 0.00E+00 0.00E+00 0.00E+00 0.00E+00 0.00E+00 0.00E+00
0.00E+00 0.00E+00 2.00E+01 0.00E+00 2.00E+01 2.00E+01
0012  5.00E-02 5.00E-02 0.00E+00 0.00E+00 0.00E+00 0.00E+00 5.00E-02 0.00E+00
0.00E+00 0.00E+00 5.00E-02 0.00E+00 0.00E+00 5.00E-02
0013  2.86E-02 0.00E+00 0.00E+00 0.00E+00 0.00E+00 0.00E+00 0.00E+00 0.00E+00
0.00E+00 0.00E+00 2.86E-02 0.00E+00 2.86E-02 2.86E-02
SUM   3.35E+01 4.96E+01 0.00E+00 3.33E+01 1.11E-01 0.00E+00 5.00E-02 1.43E+02
5.00E+01 0.00E+00 7.07E+01 0.00E+00 2.00E+01 1.43E+02


SITE PARAMETERS

DEPOSITION

   Deposition rate (m/s)             0.05

DRINKING WATER

*** Pathway disabled ***

FISH

*** Pathway disabled ***

PASTURE

*** Pathway disabled ***

HOME GROWN PRODUCE

*** Pathway disabled ***

PIGS, CHICKENS AND EGGS

*** Pathway disabled ***

DERMAL ABSORPTION

*** Pathway disabled ***

SOIL INGESTION

*** Pathway disabled ***

MOTHER'S MILK

*** Pathway disabled ***
```

This file: C:\HARP\PROJECTS\IEEC\Acute.txt

Created by HARP Risk Module Version: 21.7.30
Creation date: 11/29/2004 9:17:48 AM

EXCEPTION REPORT
(there have been no changes or exceptions)

Point Estimate
GLC source: chemical cas 71432 deleted by user
Exposure Duration: 70 year (adult resident)
Analysis Method: Average point estimate

CHEMICAL CROSS-REFERENCE TABLE

CHEM	CAS	ABBREVIATION	POLLUTANT NAME
0001	9901	DieselExhPM	Diesel engine exhaust, particulate matter
0002	7440382	Arsenic	Arsenic
0003	7440417	Beryllium	Beryllium
0004	7440439	Cadmium	Cadmium
0005	7440473	Chromium	Chromium
0006	7440508	Copper	Copper
0007	1073	Cyanide cmpds	Cyanide compounds
0008	7439921	Lead	Lead
0009	7439965	Manganese	Manganese
0010	7439976	Mercury	Mercury
0011	7440020	Nickel	Nickel
0012	7782492	Selenium	Selenium
0013	7440666	Zinc	Zinc

CHEMICAL GROUND LEVEL CONCENTRATIONS (micrograms/m^3)

CHEM	CAS	ABBREVIATION	AVERAGE	HOURLY MAX	WATER	PASTURE	FISH
0001	9901	DieselExhPM	1.000E+00	1.000E+00	0.000E+00	0.000E+00	0.000E+00
0002	7440382	Arsenic	1.000E+00	1.000E+00	1.000E+00	1.000E+00	1.000E+00
0003	7440417	Beryllium	1.000E+00	1.000E+00	1.000E+00	1.000E+00	1.000E+00
0004	7440439	Cadmium	1.000E+00	1.000E+00	1.000E+00	1.000E+00	1.000E+00
0005	7440473	Chromium	1.000E+00	1.000E+00	0.000E+00	0.000E+00	0.000E+00
0006	7440508	Copper	1.000E+00	1.000E+00	0.000E+00	0.000E+00	0.000E+00
0007	1073	Cyanide cmpds	1.000E+00	1.000E+00	0.000E+00	0.000E+00	0.000E+00
0008	7439921	Lead	1.000E+00	1.000E+00	1.000E+00	1.000E+00	1.000E+00
0009	7439965	Manganese	1.000E+00	1.000E+00	0.000E+00	0.000E+00	

```
0.000E+00
0010  7439976    Mercury            1.000E+00   1.000E+00   1.000E+00   1.000E+00
1.000E+00
0011  7440020    Nickel             1.000E+00   1.000E+00   1.000E+00   1.000E+00
1.000E+00
0012  7782492    Selenium           1.000E+00   1.000E+00   0.000E+00   0.000E+00
0.000E+00
0013  7440666    Zinc               1.000E+00   1.000E+00   0.000E+00   0.000E+00
0.000E+00


ACUTE HI
CHEM        CV      CNS     BONE    DEVEL     ENDO      EYE     GILV    IMMUN
KIDN    REPRO     RESP     SKIN    BLOOD      MAX
0001  0.00E+00 0.00E+00 0.00E+00 0.00E+00 0.00E+00 0.00E+00 0.00E+00 0.00E+00
0.00E+00 0.00E+00 0.00E+00 0.00E+00 0.00E+00 1.00E-30
0002  0.00E+00 0.00E+00 0.00E+00 5.26E+00 0.00E+00 0.00E+00 0.00E+00 0.00E+00
0.00E+00 5.26E+00 0.00E+00 0.00E+00 0.00E+00 5.26E+00
0003  0.00E+00 0.00E+00 0.00E+00 0.00E+00 0.00E+00 0.00E+00 0.00E+00 0.00E+00
0.00E+00 0.00E+00 0.00E+00 0.00E+00 0.00E+00 1.00E-30
0004  0.00E+00 0.00E+00 0.00E+00 0.00E+00 0.00E+00 0.00E+00 0.00E+00 0.00E+00
0.00E+00 0.00E+00 0.00E+00 0.00E+00 0.00E+00 1.00E-30
0005  0.00E+00 0.00E+00 0.00E+00 0.00E+00 0.00E+00 0.00E+00 0.00E+00 0.00E+00
0.00E+00 0.00E+00 0.00E+00 0.00E+00 0.00E+00 1.00E-30
0006  0.00E+00 0.00E+00 0.00E+00 0.00E+00 0.00E+00 0.00E+00 0.00E+00 0.00E+00
0.00E+00 0.00E+00 1.00E-02 0.00E+00 0.00E+00 1.00E-02
0007  0.00E+00 2.94E-03 0.00E+00 0.00E+00 0.00E+00 0.00E+00 0.00E+00 0.00E+00
0.00E+00 0.00E+00 0.00E+00 0.00E+00 0.00E+00 2.94E-03
0008  0.00E+00 0.00E+00 0.00E+00 0.00E+00 0.00E+00 0.00E+00 0.00E+00 0.00E+00
0.00E+00 0.00E+00 0.00E+00 0.00E+00 0.00E+00 1.00E-30
0009  0.00E+00 0.00E+00 0.00E+00 0.00E+00 0.00E+00 0.00E+00 0.00E+00 0.00E+00
0.00E+00 0.00E+00 0.00E+00 0.00E+00 0.00E+00 1.00E-30
0010  0.00E+00 0.00E+00 0.00E+00 5.56E-01 0.00E+00 0.00E+00 0.00E+00 0.00E+00
0.00E+00 5.56E-01 0.00E+00 0.00E+00 0.00E+00 5.56E-01
0011  0.00E+00 0.00E+00 0.00E+00 0.00E+00 0.00E+00 0.00E+00 0.00E+00 1.67E-01
0.00E+00 0.00E+00 1.67E-01 0.00E+00 0.00E+00 1.67E-01
0012  0.00E+00 0.00E+00 0.00E+00 0.00E+00 0.00E+00 0.00E+00 0.00E+00 0.00E+00
0.00E+00 0.00E+00 0.00E+00 0.00E+00 0.00E+00 1.00E-30
0013  0.00E+00 0.00E+00 0.00E+00 0.00E+00 0.00E+00 0.00E+00 0.00E+00 0.00E+00
0.00E+00 0.00E+00 0.00E+00 0.00E+00 0.00E+00 1.00E-30
SUM   0.00E+00 2.94E-03 0.00E+00 5.82E+00 0.00E+00 0.00E+00 0.00E+00 1.67E-01
0.00E+00 5.82E+00 1.77E-01 0.00E+00 0.00E+00 5.82E+00


SITE PARAMETERS

DEPOSITION

   Deposition rate (m/s)             0.05

DRINKING WATER

*** Pathway disabled ***

FISH

*** Pathway disabled ***

PASTURE

*** Pathway disabled ***
```

HOME GROWN PRODUCE

*** Pathway disabled ***

PIGS, CHICKENS AND EGGS

*** Pathway disabled ***

DERMAL ABSORPTION

*** Pathway disabled ***

SOIL INGESTION

*** Pathway disabled ***

MOTHER'S MILK

*** Pathway disabled ***

Attachment HRA-3
Calculation of Weighted Risk Rates for Modeling

ATTACHMENT HRA-3

SCREENING LEVEL HEALTH RISK CALCULATIONS

Table HRA-3-1
Cancer Risk Assessment Modeling Results for Gas Turbines

		Residential (70-yr) Exposure			Residential (70-yr) Exposure			Residential (70-yr) Exposure			Residential (70-yr) Exposure			Worker Exposure		
Compound	Annual Average Emissions Per Turbine, g/s	(OEHHA) Method Unit Risk (per	(OEHHA) Method Cancer Risk	Contribution to Cancer Risk (2)	Point Est Unit Risk (per ug/m3	Point Est Cancer Risk Model Input	Contribution to Cancer Risk (3)	Point Est Unit Risk (per ug/m3	Point Est Cancer Risk Model Input	Contribution to Cancer Risk (4)	(Adjusted) Method Unit Risk (per	(Adjusted) Method Cancer Risk	Contribution to Cancer Risk (5)	(OEHHA) Method Unit Risk (per	(OEHHA) Method Cancer Risk	Contribution to Cancer Risk (6)
Ammonia	2.15E+00	0	0	0	0	0	0	0	0	0	0	0	0	0	0	0
Propylene	2.49E-01	0	0	0	0	0	0	0	0	0	0	0	0	0	0	0
Acetaldehyde	1.32E-02	3.77E-06	4.96E-02	3.07E-02	2.60E-06	3.42E-02	2.12E-02	3.77E-06	4.96E-02	3.07E-02	2.90E-06	3.82E-02	2.36E-02	5.72E-07	7.53E-03	4.66E-03
Acrolein	1.19E-03	0	0	0	0	0	0	0	0	0	0	0	0	0	0	0
Benzene	1.07E-03	3.77E-05	4.05E-02	2.51E-02	2.60E-05	2.79E-02	1.73E-02	3.77E-05	4.05E-02	2.51E-02	2.90E-05	3.12E-02	1.93E-02	5.72E-06	6.14E-03	3.80E-03
1,3-Butadiene	1.42E-04	2.26E-04	3.20E-02	1.98E-02	1.56E-04	2.21E-02	1.37E-02	2.26E-04	3.20E-02	1.98E-02	1.74E-04	2.46E-02	1.52E-02	3.43E-05	4.86E-03	3.01E-03
Ethylbenzene	1.05E-02	0	0	0	0	0	0	0	0	0	0	0	0	0	0	0
Formaldehyde	1.18E-01	7.91E-06	9.36E-01	5.79E-01	5.46E-06	6.46E-01	4.00E-01	7.91E-06	9.36E-01	5.79E-01	6.08E-06	7.20E-01	4.45E-01	1.20E-06	1.42E-01	8.79E-02
Hexane	8.35E-02	0	0	0	0	0	0	0	0	0	0	0	0	0	0	0
Naphthalene	5.35E-04	0	0	0	0	0	0	0	0	0	0	0	0	0	0	0
PAHs (listed individually below) (Note 1)	5.77E-05	1.65E-02	9.53E-01	5.90E-01	3.83E-03	2.21E-01	1.37E-01	1.70E-02	9.82E-01	6.07E-01	1.65E-02	9.53E-01	5.89E-01	6.00E-03	3.46E-01	2.14E-01
Benzo(a)anthracene		*1.65E-03*			*3.83E-04*			*1.70E-03*			*1.65E-02*			*6.00E-04*		
Benzo(a)pyrene		*1.65E-02*			*3.83E-03*			*1.70E-02*			*1.65E-03*			*6.00E-03*		
Benzo(b)fluoranthrene		*1.65E-03*			*3.83E-04*			*1.70E-03*			*1.65E-03*			*6.00E-04*		
Benzo(k)fluoranthrene		*1.65E-03*			*3.83E-04*			*1.70E-03*			*1.65E-03*			*6.00E-04*		
Chrysene		*1.65E-04*			*3.83E-05*			*1.70E-04*			*1.65E-04*			*6.00E-05*		
Dibenz(a,h)anthracene		*6.84E-03*			*2.03E-03*			*6.84E-03*			*6.48E-03*			*2.21E-03*		
Indeno(1,2,3-cd)pyrene		*1.65E-03*			*3.83E-04*			*1.70E-03*			*1.65E-03*			*6.00E-04*		
Propylene oxide	8.68E-03	4.90E-06	4.25E-02	2.63E-02	3.38E-06	2.93E-02	1.81E-02	4.90E-06	4.25E-02	2.63E-02	3.76E-06	3.26E-02	2.02E-02	7.43E-07	6.45E-03	3.99E-03
Toluene	4.29E-02	0	0	0	0	0	0	0	0	0	0	0	0	0	0	0
Xylene	2.11E-02	0	0	0	0	0	0	0	0	0	0	0	0	0	0	0
			2.05E+00 per ug/m3	1.2709 in one million		9.81E-01 per ug/m3	0.6070 in one million		2.08E+00 per ug/m3	1.2888 in one million		1.80E+00 per ug/m3	1.1131 in one million		5.14E-01 per ug/m3	0.3177 in one million

Notes:
(1) Maximum unit risk value applied to all PAHs for purposes of this analysis.
(2) Based on modeled cancer risk from the turbines of 1.271 in one million.
(3) Based on modeled cancer risk from the turbines of 0.607 in one million.
(4) Based on modeled cancer risk from the turbines of 1.288 in one million.
(5) Based on modeled cancer risk from the turbines of 1.113 in one million.
(6) Based on modeled cancer risk from the turbines of 0.317 in one million.

Table HRA-3-2
Cancer Risk Assessment Modeling Results for Standby/Emergency Engines

Engine	Annual average emissions per engine, g/s	Residential (70-yr) Exposure			Residential (70-yr) Exposure			Residential (70-yr) Exposure			Residential (70-yr) Exposure			Worker Exposure		
		Derived (OEHHA) Method Unit Risk (per ug/m3 per g/s)	Derived (OEHHA) Method Cancer Risk Model Input	Modeled Contribution to Cancer Risk per Engine	Average Point Est Unit Risk (per ug/m3 per g/s)	Average Point Est Cancer Risk Model Input	Modeled Contribution to Cancer Risk per Engine	High-End Point Est Unit Risk (per ug/m3 per g/s)	High-End Point Est Cancer Risk Model Input	Modeled Contribution to Cancer Risk per Engine	Derived (Adjusted) Method Unit Risk (per ug/m3 per g/s)	Derived (Adjusted) Method Cancer Risk Model Input	Modeled Contribution to Cancer Risk per Engine	Derived (OEHHA) Method Unit Risk (per ug/m3 per g/s)	Derived (OEHHA) Method Cancer Risk Model Input	Modeled Contribution to Cancer Risk per Engine
Standby Generator 1	1.06E-04	4.15E-04	4.38E-02	0.2985	2.86E-04	3.02E-02	0.2057	4.15E-04	4.38E-02	0.2985	3.19E-04	3.37E-02	0.2295	6.29E-05	6.64E-03	0.0453
Standby Generator 2	1.06E-04	4.15E-04	4.38E-02	0.2985	2.86E-04	3.02E-02	0.2057	4.15E-04	4.38E-02	0.2985	3.19E-04	3.37E-02	0.2295	6.29E-05	6.64E-03	0.0453
			per ug/m3	in one million		per ug/m3	in one million		per ug/m3	in one million		per ug/m3	in one million		per ug/m3	in one million
Firepump	4.04E-05	4.15E-04	1.68E-02	0.8499	2.86E-04	1.16E-02	0.5855	4.15E-04	1.68E-02	0.8499	3.19E-04	1.29E-02	0.6534	6.29E-05	2.54E-03	0.1288
			per ug/m3	in one million		per ug/m3	in one million		per ug/m3	in one million		per ug/m3	in one million		per ug/m3	in one million

Table HRA-3-3
Cancer Risk Assessment Modeling Results for Cooling Towers

		Residential (70-yr) Exposure			Residential (70-yr) Exposure			Residential (70-yr) Exposure			Residential (70-yr) Exposure			Worker Exposure		
Compound	Annual Average Emissions Per Cooling Tower Cell, g/s	Derived (OEHHA) Method Unit Risk (per ug/m3 per g/s)	Derived (OEHHA) Method Cancer Risk Model Input (each cell, per ug/m3)	Modeled Contribution to Cancer Risk both Towers	Average Point Est Unit Risk (per ug/m3 per g/s)	Average Point Est Cancer Risk Model Input (each cell, per ug/m3)	Modeled Contribution to Cancer Risk both Towers	High-End Point Est Unit Risk (per ug/m3 per g/s)	High-End Point Est Cancer Risk Model Input (each cell, per ug/m3)	Modeled Contribution to Cancer Risk both Towers	Derived (Adjusted) Method Unit Risk (per ug/m3 per g/s)	Derived (Adjusted) Method Cancer Risk Model Input (each cell, per ug/m3)	Modeled Contribution to Cancer Risk both Towers	Derived (OEHHA) Method Unit Risk (per ug/m3 per g/s)	Derived (OEHHA) Method Cancer Risk Model Input (each cell, per ug/m3)	Modeled Contribution to Cancer Risk both Towers
Ammonia	9.17E-06	0.00E+00	0.00E+00	0.00E+00	0.00E+00	0.00E+00	0.00E+00	0.00E+00	0.00E+00	0.00E+00	0.00E+00	0.00E+00	0.00E+00	0.00E+00	0.00E+00	0.00E+00
Arsenic	6.42E-07	4.52E-03	2.90E-03	5.79E-02	3.12E-03	2.00E-03	4.00E-02	4.52E-03	2.90E-03	5.79E-02	3.48E-03	2.23E-03	4.46E-02	6.86E-04	4.40E-04	8.79E-03
Beryllium	1.38E-07	3.17E-03	4.36E-04	8.70E-03	2.18E-03	3.00E-04	5.98E-03	3.17E-03	4.36E-04	8.70E-03	2.43E-03	3.34E-04	6.67E-03	4.80E-04	6.60E-05	1.32E-03
Cadmium	1.38E-07	5.65E-03	7.77E-04	1.55E-02	3.90E-03	5.36E-04	1.07E-02	5.65E-03	7.77E-04	1.55E-02	4.34E-03	5.97E-04	1.19E-02	8.57E-04	1.18E-04	2.35E-03
Chromium	2.29E-07	0.00E+00	0.00E+00	0.00E+00	0.00E+00	0.00E+00	0.00E+00	0.00E+00	0.00E+00	0.00E+00	0.00E+00	0.00E+00	0.00E+00	0.00E+00	0.00E+00	0.00E+00
Copper	3.21E-07	0.00E+00	0.00E+00	0.00E+00	0.00E+00	0.00E+00	0.00E+00	0.00E+00	0.00E+00	0.00E+00	0.00E+00	0.00E+00	0.00E+00	0.00E+00	0.00E+00	0.00E+00
Cyanide	4.58E-10	0.00E+00	0.00E+00	0.00E+00	0.00E+00	0.00E+00	0.00E+00	0.00E+00	0.00E+00	0.00E+00	0.00E+00	0.00E+00	0.00E+00	0.00E+00	0.00E+00	0.00E+00
Lead	6.88E-07	1.58E-05	1.09E-05	2.17E-04	1.09E-05	7.50E-06	1.50E-04	1.58E-05	1.09E-05	2.17E-04	1.22E-05	8.39E-06	1.67E-04	2.40E-06	1.65E-06	3.29E-05
Manganese	4.58E-07	0.00E+00	0.00E+00	0.00E+00	0.00E+00	0.00E+00	0.00E+00	0.00E+00	0.00E+00	0.00E+00	0.00E+00	0.00E+00	0.00E+00	0.00E+00	0.00E+00	0.00E+00
Mercury	2.29E-08	0.00E+00	0.00E+00	0.00E+00	0.00E+00	0.00E+00	0.00E+00	0.00E+00	0.00E+00	0.00E+00	0.00E+00	0.00E+00	0.00E+00	0.00E+00	0.00E+00	0.00E+00
Nickel	9.17E-07	3.43E-04	3.14E-04	6.27E-03	2.36E-04	2.16E-04	4.32E-03	3.43E-04	3.14E-04	6.27E-03	2.64E-04	2.42E-04	4.83E-03	5.20E-05	4.77E-05	9.51E-04
Selenium	9.63E-07	0.00E+00	0.00E+00	0.00E+00	0.00E+00	0.00E+00	0.00E+00	0.00E+00	0.00E+00	0.00E+00	0.00E+00	0.00E+00	0.00E+00	0.00E+00	0.00E+00	0.00E+00
Zinc	3.71E-06	0.00E+00	0.00E+00	0.00E+00	0.00E+00	0.00E+00	0.00E+00	0.00E+00	0.00E+00	0.00E+00	0.00E+00	0.00E+00	0.00E+00	0.00E+00	0.00E+00	0.00E+00
			4.44E-03 per ug/m3	0.0886 in one million		3.06E-03 per ug/m3	0.0611 in one million		4.44E-03 per ug/m3	0.0886 in one million		3.42E-03 per ug/m3	0.0681 in one million		6.73E-04 per ug/m3	0.0134 in one million

Table HRA-3-4
Cancer Risk Assessment Modeling Results Auxiliary Boiler

	Residential (70-yr) Exposure				Residential (70-yr) Exposure			Residential (70-yr) Exposure			Residential (70-yr) Exposure			Worker Exposure		
Compound	Annual Average Emissions, g/s	Derived (OEHHA) Method Unit Risk (per ug/m3 per g/s)	Derived (OEHHA) Method Cancer Risk Model Input (per ug/m3)	Modeled Contribution to Cancer Risk	Average Point Est Unit Risk (per ug/m3 per g/s)	Average Point Est Cancer Risk Model Input (per ug/m3)	Modeled Contribution to Cancer Risk	High-End Point Est Unit Risk (per ug/m3 per g/s)	High-End Point Est Cancer Risk Model Input (per ug/m3)	Modeled Contribution to Cancer Risk	Derived (Adjusted) Method Unit Risk (per ug/m3 per g/s)	Derived (Adjusted) Method Cancer Risk Model Input (per ug/m3)	Modeled Contribution to Cancer Risk	Derived (OEHHA) Method Unit Risk (per ug/m3 per g/s)	Derived (OEHHA) Method Cancer Risk Model Input (per ug/m3)	Modeled Contribution to Cancer Risk
Ammonia	1.17E-02	0	0	0.00E+00	0	0	0.00E+00	0	0	0.00E+00	0	0	0.00E+00	0	0	0.00E+00
Propylene	8.07E-05	0	0	0.00E+00	0	0	0.00E+00	0	0	0.00E+00	0	0	0.00E+00	0	0	0.00E+00
Acetaldehyde	4.61E-05	3.77E-06	1.74E-04	2.17E-04	2.60E-06	1.20E-04	1.50E-04	3.77E-06	1.74E-04	2.17E-04	2.90E-06	1.34E-04	1.67E-04	5.72E-07	2.64E-05	3.30E-05
Acrolein	4.16E-06	0	0	0.00E+00	0	0	0.00E+00	0	0	0.00E+00	0	0	0.00E+00	0	0	0.00E+00
Benzene	2.24E-05	3.77E-05	8.44E-04	1.06E-03	2.60E-05	5.82E-04	7.29E-04	3.77E-05	8.44E-04	1.06E-03	2.90E-05	6.49E-04	8.13E-04	5.72E-06	1.28E-04	1.60E-04
Benzaldehyde	8.52E-05	0.00E+00	0.00E+00	0.00E+00	0.00E+00	0.00E+00	0.00E+00	0.00E+00	0.00E+00	0.00E+00	0.00E+00	0.00E+00	0.00E+00	0.00E+00	0.00E+00	0.00E+00
Ethylbenzene	1.04E-05	0	0	0.00E+00	0	0	0.00E+00	0	0	0.00E+00	0	0	0.00E+00	0	0	0.00E+00
Formaldehyde	1.15E-03	7.91E-06	9.08E-03	1.14E-02	5.46E-06	6.27E-03	7.85E-03	7.91E-06	9.08E-03	1.14E-02	6.08E-06	6.98E-03	8.74E-03	1.20E-06	1.38E-03	1.72E-03
Hexane	6.75E-06	0	0	0.00E+00	0	0	0.00E+00	0	0	0.00E+00	0	0	0.00E+00	0	0	0.00E+00
Naphthalene	1.56E-06	0	0	0.00E+00	0	0	0.00E+00	0	0	0.00E+00	0	0	0.00E+00	0	0	0.00E+00
PAHs (assumed to be Benzo(a)pyrene)	5.20E-07	1.65E-02	8.57E-03	1.07E-02	3.83E-03	1.99E-03	2.49E-03	1.70E-02	8.83E-03	1.11E-02	1.65E-03	8.57E-04	1.07E-03	6.00E-03	3.12E-03	3.90E-03
Toluene	4.05E-05	0	0	0.00E+00	0	0	0.00E+00	0	0	0.00E+00	0	0	0.00E+00	0	0	0.00E+00
Xylene	3.01E-05	0	0	0.00E+00	0	0	0.00E+00	0	0	0.00E+00	0	0	0.00E+00	0	0	0.00E+00
			1.87E-02 per ug/m3	0.0234 in one million		8.96E-03 per ug/m3	0.0112 in one million		1.89E-02 per ug/m3	0.0237 in one million		8.62E-03 per ug/m3	0.0108 in one million		4.65E-03 per ug/m3	0.0058 in one million

Table HRA-3-5
Acute and Chronic Risk Modeling Results for Gas Turbines

Compound	Max Hourly Emissions Per Turbine g/s	HARP Acute HI (per ug/m3 per g/s)	Acute HHI Model Input (per ug/m3)	Modeled Contribution to Acute HHI	Annual Average Emissions Per Turbine, g/s	Chronic HI - HARP OEHHA (per ug/m3 per g/s)	Chronic HHI Model Input (per ug/m3)	Modeled Contribution to Chronic HHI
Ammonia	2.20E+00	3.13E-04	6.87E-04	9.22E-03	2.15E+00	5.00E-03	1.08E-02	6.65E-03
Propylene	2.49E-01	--	--	0.00E+00	2.49E-01	3.33E-04	8.28E-05	5.12E-05
Acetaldehyde	1.32E-02	--	--	0.00E+00	1.32E-02	1.11E-01	1.46E-03	9.04E-04
Acrolein	1.19E-03	5.26E+00	6.26E-03	8.40E-02	1.19E-03	1.67E+01	1.99E-02	1.23E-02
Benzene	1.07E-03	7.69E-04	8.26E-07	1.11E-05	1.07E-03	1.67E-02	1.79E-05	1.11E-05
1,3-Butadiene	1.42E-04	--	--	0.00E+00	1.42E-04	5.00E-02	7.08E-06	4.38E-06
Ethylbenzene	1.05E-02	--	--	0.00E+00	1.05E-02	5.00E-04	5.26E-06	3.25E-06
Formaldehyde	1.18E-01	1.06E-02	1.25E-03	1.68E-02	1.18E-01	3.33E-01	3.94E-02	2.44E-02
Hexane	8.35E-02	--	--	0.00E+00	8.35E-02	1.43E-04	1.19E-05	7.39E-06
Naphthalene	5.35E-04	--	--	0.00E+00	5.35E-04	1.11E-01	5.94E-05	3.68E-05
PAHs (listed individually below)	5.77E-05	--	--	0.00E+00	5.77E-05	--	--	0.00E+00
Benzo(a)anthracene				0.00E+00				0.00E+00
Benzo(a)pyrene				0.00E+00				0.00E+00
Benzo(b)fluoranthrene				0.00E+00				0.00E+00
Benzo(k)fluoranthrene				0.00E+00				0.00E+00
Chrysene				0.00E+00				0.00E+00
Dibenz(a,h)anthracene				0.00E+00				0.00E+00
Indeno(1,2,3-cd)pyrene				0.00E+00				0.00E+00
Propylene oxide	8.68E-03	3.23E-04	2.80E-06	3.76E-05	8.68E-03	3.33E-02	2.89E-04	1.79E-04
Toluene	4.29E-02	2.70E-05	1.16E-06	1.55E-05	4.29E-02	3.33E-03	1.43E-04	8.84E-05
Xylene	2.11E-02	4.55E-05	9.58E-07	1.29E-05	2.11E-02	1.43E-03	3.01E-05	1.86E-05
		Total =	8.21E-03	0.1101		Total =	7.22E-02	0.0447

Table HRA-3-6

Acute and Chronic Risk Modeling Results for Standby/Emergency Engines

		Chronic HHI		
Engine	Annual average emissions per engine, g/s	Chronic HHI - HARP OEHHA (per ug/m3)	Weighted Contribution to Chronic HHI (g/s per ug/m3)	Modeled Contribution to Chronic HHI per Engine
Standby Generator 1	1.06E-04	2.00E-01	2.11E-05	1.40E-04
Standby Generator 2	1.06E-04	2.00E-01	2.11E-05	1.40E-04
Firepump	4.04E-05	2.00E-01	8.09E-06	4.10E-04

Table HRA-3-7
Acute and Chronic Risk Modeling Results for Auxiliary Boiler

Compound	Max Hourly Emissions g/s	HARP Acute HI (per ug/m3 per g/s)	Acute HHI Model Input (per ug/m3)	Modeled Contribution to Acute HHI	Annual Average Emissions, g/s	Chronic HI - HARP OEHHA (per ug/m3 per g/s)	Chronic HHI Model Input (per ug/m3)	Modeled Contribution to Chronic HHI
Ammonia	4.39E-02	3.13E-04	1.37E-05	8.57E-04	1.17E-02	5.00E-03	5.86E-05	7.38E-05
Propylene	3.02E-04	--	--	0.00E+00	8.07E-05	3.33E-04	2.69E-08	3.38E-08
Acetaldehyde	1.73E-04	--	--	0.00E+00	4.61E-05	1.11E-01	5.12E-06	6.44E-06
Acrolein	1.56E-05	5.26E+00	8.18E-05	5.11E-03	4.16E-06	1.67E+01	6.94E-05	8.74E-05
Benzene	8.38E-05	7.69E-04	6.45E-08	4.02E-06	2.24E-05	1.67E-02	3.74E-07	4.71E-07
Benzaldehyde	3.19E-04	0.00E+00	0.00E+00	0.00E+00	8.52E-05	0.00E+00	0.00E+00	0.00E+00
Ethylbenzene	3.89E-05	--	--	0.00E+00	1.04E-05	5.00E-04	5.20E-09	6.54E-09
Formaldehyde	4.30E-03	1.06E-02	4.56E-05	2.84E-03	1.15E-03	3.33E-01	3.82E-04	4.81E-04
Hexane	2.53E-05	--	--	0.00E+00	6.75E-06	1.43E-04	9.66E-10	1.22E-09
Naphthalene	5.84E-06	--	--	0.00E+00	1.56E-06	1.11E-01	1.73E-07	2.18E-07
PAHs (assumed to be Benzo(a) pyrene)	1.95E-06	--	--	0.00E+00	5.20E-07	--	--	0.00E+00
Toluene	1.52E-04	2.70E-05	4.10E-09	2.56E-07	4.05E-05	3.33E-03	1.35E-07	1.70E-07
Xylene	1.13E-04	4.55E-05	5.13E-09	3.20E-07	3.01E-05	1.43E-03	4.31E-08	5.43E-08
		Total =	1.41E-04	0.0088		Total =	5.16E-04	0.0007

Table HRA-3-8
Acute and Chronic Risk Modeling Results for Cooling Towers

Compound	Max Hourly Emissions per Cell g/s	HARP Acute HI (per ug/m3 per g/s)	Acute HHI Model Input (per ug/m3)	Modeled Contribution to Acute HHI both Towers	Annual Average Emissions per Cell, g/s	Chronic HI - HARP OEHHA (per ug/m3 per g/s)	Chronic HHI Model Input (per ug/m3)	Modeled Contribution to Chronic HHI both Towers
Ammonia	9.17E-06	3.13E-04	2.87E-09	1.67E-06	9.17E-06	5.00E-03	4.58E-08	9.15E-07
Arsenic	6.42E-07	5.26E+00	3.38E-06	1.96E-03	6.42E-07	3.33E+01	2.14E-05	4.27E-04
Beryllium	1.38E-07	0.00E+00	0.00E+00	0.00E+00	1.38E-07	1.43E+02	1.97E-05	3.93E-04
Cadmium	1.38E-07	0.00E+00	0.00E+00	0.00E+00	1.38E-07	5.00E+01	6.88E-06	1.37E-04
Chromium	2.29E-07	0.00E+00	0.00E+00	0.00E+00	2.29E-07	0.00E+00	0.00E+00	0.00E+00
Copper	3.21E-07	1.00E-02	3.21E-09	1.86E-06	3.21E-07	4.17E-01	1.34E-07	2.67E-06
Cyanide	4.58E-10	2.94E-03	1.35E-12	7.83E-10	4.58E-10	1.11E-01	5.09E-11	1.02E-09
Lead	6.88E-07	0.00E+00	0.00E+00	0.00E+00	6.88E-07	0.00E+00	0.00E+00	0.00E+00
Manganese	4.58E-07	0.00E+00	0.00E+00	0.00E+00	4.58E-07	5.00E+00	2.29E-06	4.58E-05
Mercury	2.29E-08	5.56E-01	1.27E-08	7.40E-06	2.29E-08	1.11E+01	2.54E-07	5.08E-06
Nickel	9.17E-07	1.67E-01	1.53E-07	8.89E-05	9.17E-07	2.00E+01	1.83E-05	3.66E-04
Selenium	9.63E-07	0.00E+00	0.00E+00	0.00E+00	9.63E-07	5.00E-02	4.81E-08	9.61E-07
Zinc	3.71E-06	0.00E+00	0.00E+00	0.00E+00	3.71E-06	2.86E-02	1.06E-07	2.12E-06
		Total =	3.55E-06	0.0021		Total =	6.91E-05	0.0014