SECTION 7.0

Water Supply

SECTION 7.0

Water Supply

This section describes the proposed water supply sources and alternatives for the CVEC. Section 7.1 discusses the makeup cooling water sources and alternatives, as well as a description of the facilities required to convey the water to the CVEC. This section also discusses the selection criteria for assessing the alternatives and proposed construction practices. Section 7.2 discusses domestic use water. Section 7.3 discusses process makeup water. Section 7.4 addresses laws, ordinances, regulations, and standards (LORS). A map of the project site and project linears is presented as Figure 2.1-1.

Water requirements for CVEC are shown in Table 7.0-1. The CVEC would require approximately 7,000 acre-feet per year (afy) in a typical year. During normal operation, approximately 95 percent of the water would be used for condensing steam from the heat recovery steam generator (HRSG). The remainder would be used for process makeup water to the steam cycle and for fogging the combustion turbine inlet air.

The source of cooling water makeup would be reclaimed water drawn from under the infiltration ponds of the Fresno-Clovis Wastewater Treatment Facility (WWTF). The Fresno-Clovis WWTF is a secondary wastewater plant. Effluent from the plant is either sent to nearby farms to irrigate crops or sent to infiltration ponds. The City of Fresno (City) and the Fresno Irrigation District (FID) cooperatively operate a series of water reclamation wells that pump from the aquifer during the irrigation season.

The City and the Applicant have entered into a cooperative agreement to extract up to 7,000 afy of this water to supply water to the CVEC. New reclamation wells, similar to the City's existing Flowpath wells, will be installed in the City's existing well field for this purpose. The wells will be owned and operated by the City of Fresno.

The limited domestic demands (sanitary and washwater) for the project would be met by a connection to the City of San Joaquin domestic supply.

TABLE 7.0-1
Average and Peak Daily and Annual Water Usage and Wastewater Discharge for CVEC

Water Use	Average Daily Use (gpm)	Maximum Use (gpm)	Typical Annual Use (afy)	Maximum Annual Use (afy)
Process and Cooling Water	3,321	6,455	5,342	7,000
Potable Water Service	2	2	3	3
Wastewater Discharge (to San Joaquin Sewer)	2	2	3	3

7.1 Cooling Water

The proposed cooling water makeup supply source for the project is reclaimed water drawn from under the infiltration ponds of the Fresno-Clovis WWTF. A description of the reclaimed water supply

and water quality is provided below, as well as the proposed infrastructure required to deliver the reclaimed water from the infiltration ponds site to the CVEC site.

7.1.1 Reclaimed Water Supply

The water for the CVEC would be provided by reclaimed water from the Fresno-Clovis WWTF. Treated effluent from the WWTF is either sent to nearby farms for irrigation or to infiltration ponds. The City of Fresno and FID cooperatively operate a series of water reclamation wells that pump from the impaired groundwater mound for irrigation season. The City currently discharges approximately 65,000 afy to the infiltration ponds, and FID reclaims approximately 32,000 afy. The City and the Applicant have entered into a cooperative agreement to extract up to 7,000 afy to provide water to the CVEC.

The infiltration of the water into the groundwater has created a mound of impaired water under the infiltration ponds. The Central Valley Regional Water Quality Control Board (RWQCB) has advised the City of Fresno that it will be necessary to take steps to control the expansion of the groundwater mound. CVEC's water use will assist the City's compliance with RWQCB requirements.

It is anticipated that the RWQCB will issue requirements for the reclaimed water supply project and that those requirements will incorporate input received from the State of California Department of Health Services (DHS) pursuant to the Department's review of the Engineer's Report for the Production, Distribution, and Use of Reclaimed Groundwater. DHS's review of the Engineer's Report is intended to ensure that the reclaimed water production, delivery, and use systems comply with California Code of Regulations (CCR) Title 22 requirements.

Figure 7.1-1 shows the general extent of the impaired water mound in relationship to the infiltration ponds and other features. The mound is at an elevation of approximately 230 feet, dropping to around 200 feet 2 miles southeast. The general groundwater gradient slopes to the southwest.

The City of Fresno operates a series of 21 reclamation wells that extract groundwater from beneath the infiltration ponds (Figure 7.1-1). These wells extract groundwater from both the shallow and deep zones. The extracted groundwater is then conveyed to the FID. The City has recently (October 2000) installed three new reclamation wells (R-11, R-14, and R-18) to replace older, inoperative reclamation wells. These new wells are constructed to optimize capture of impaired water and are referred to as "Flowpath" wells. New wells of this flowpath design would be constructed (owned and operated by the City) to add capacity to the well field to meet CVEC demands and enhance the ability of the City to recover impaired water from the mound. The new wells would be located in the southwest quadrant of the groundwater mound near the area near the leading edge of the migrating plume of impaired water. The new flowpath wells and their location will greatly enhance the overall capability of the City's groundwater wells to recover the infiltrated wastewater. Figure 7.1-1 shows the location of the proposed new reclamation wells that will supply cooling and industrial process water to the CVEC.

A schematic of the proposed reclamation and conveyance facilities is shown in Figure 7.1-2. The reclamation well design will be similar to existing City reclamation wells. Six new wells will be drilled (four wells in operation during peak demand periods, and two wells in standby mode) to provide the maximum production rate of 6,455 gpm required by CVEC. Each well pump will require a 125 horsepower motor to meet the capacity requirements. The new wells will be similar in appearance to the City's existing wells. The well pumps will be powered by the same electrical system that powers the City's existing reclamation wells via 12-kV overhead power lines. Preliminary investigations indicate that the existing electrical systems at the WWTF have the capacity to supply power to both the existing loads and the proposed new well.

The City's existing 12-kV electrical distribution system in the area of the infiltration ponds will be extended to provide electrical service to the new CVEC reclamation wells. Each of the well pump motors will be fed from new 40-foot wooden power poles similar to the existing power poles.

7.1.2 Reclaimed Water Quality

Table 7.1-1 summarizes the quality of the reclaimed water from the City of Fresno's existing reclamation wells. (Data from Flowpath wells only).

TABLE 7.1-1
Summary of Fresno-Clovis WWTF Reclaimed Water Quality (new Flowpath wells only)

Parameter	Min	Max	Average	Median	95th Percentile
Alkalinity (CaCO3 mg/L)	225	252	243	249	251.6
Aluminum (mg/L)	<0.05	<0.05	<0.05	<0.05	-
Ammonia as N (mg/L)	<0.00075	<0.00075	<0.00075	<0.00075	-
Arsenic (mg/L)	0.02	0.03	0.02	.03	0.03
Barium (mg/L)	0.06	0.08	0.07	0.07	0.08
Boron (mg/L)	0.18	0.21	0.20	0.20	0.21
Beryllium (mg/L)	<0.005	<0.005	<0.005	<0.005	-
Cadmium (mg/L)	<0.0001	<0.0001	<0.0001	<0.0001	-
Calcium (mg/L)	40.6	43.2	42.13	42.3	43.18
Carbonate (as $CaCO_3$) (mg/L)	225	252	243.56	249	251.6
Chloride (mg/L)	58	84	76.89	79	83.2
Chromium (mg/L)	<0.005	<0.005	<0.005	<0.005	-
Conductivity (uMHOS/cm)	744	799	777.33	783	796.2
Copper (mg/L)	<0.005	<0.005	<0.005	<0.005	-
Fluoride (mg/L)	0.12	0.17	0.14	0.14	0.17
Iron (mg/L)	0.08	0.24	0.19	0.21	0.24
Iron dissolved (mg/L)	0.06	0.20	0.12	0.11	0.19
Lead (mg/L)	0.001	0.002	0.002	0.002	0.002
Magnesium (mg/L)	22.3	24.2	23.4	23.6	24.15
Manganese (mg/L)	0.32	2.82	1.24	0.61	2.81
Manganese dissolved (mg/L)	0.32	2.75	1.23	0.62	2.75
Mercury (mg/L)	<0.0001	<0.0001	<0.0001	<0.0001	
Nickel (mg/L)	0.01	0.02	0.02	0.02	0.02
Nitrate-Nitrogen (mg/L)	0.21	0.5	0.31	0.3	0.46
Nitrate/Nitrite Nitrogen (mg/L)	<0.000016	<0.000016	<0.000016	<0.000016	-
Total Nitrogen (mg/L)	0.59	<2.0	<2.0	<2.0	-
pH	6.93	7.72	7.35	7.3	7.69
Phosphorus, Total (mg/L)	1.17	3.64	2.38	2.65	3.63
Potassium (mg/L)	6.1	8.9	7.73	8.2	8.88

TABLE 7.1-1
Summary of Fresno-Clovis WWTF Reclaimed Water Quality (new Flowpath wells only)

Parameter	Min	Max	Average	Median	95th Percentile
Selenium (mg/L)	0.001	0.001	0.001	0.001	0.001
Silica (SiO2) (mg/L)	61.6	71.3	66.83	66.95	70.65
Silicon (mg/L)	28.8	33.3	31.23	31.3	33
Silver (mg/L)	<0.0001	<0.0001	<0.0001	<0.0001	-
Sodium (mg/L)	71	79	75.67	76.35	79
Sulfate as SO_4 (mg/L)	21	34	28	29	33.6
TDS (mg/L)	472	509	489.89	490	508.6
TOC (mg/L)	2.6	8	5.07	4.6	7.66
Total Kjeldahl Nitrogen	0.67	0.69	0.68	-	-
Turbidity, NTU	0.041	4.355	0.220	0.128	0.626
Vanadium (mg/L)	0.02	0.03	0.02	0.02	0.03
Zinc (mg/L)	0.01	0.03	0.01	0.01	0.03

Based on water quality analyses conducted since the Flowpath wells (R-11, R-14, and R-18) were installed in October 2000.
For some of the parameters a (-) sign has been used to indicate a lack of adequate data to calculate the particular statistic.

Reclaimed water will require treatment with a biocide to achieve a 5-log (99.999 percent) reduction in virus levels (CCR Title 22). Based on testing protocol approved by the California Department of Health Services and using existing City of Fresno reclamation wells, it was determined that the addition of sodium hypochlorite (i.e., bleach) results in adequate virus reduction.

The sodium hypochlorite system will consist of two chemical feed pumps, two 3,500-gallon storage tanks, and one 400-gallon day tank. The 3,500-gallon storage tanks will be dual-walled, insulated with reflective coating (white), and located outdoors. A non-combustible canopy will cover the storage tanks to provide limited protection from direct UV exposure. Another wall/sun-screen may be provided on one side of the canopy to protect from afternoon sun and heat (75 percent of the total square footage of the walls will remain open). Each storage tank will include a vent to atmosphere for sodium hypochlorite offgassing. At a maximum dose of 5 mg/L and a maximum process flow of 6,455 gpm, 18 days of storage are provided.

The 400-gallon day tank, the chemical feed pumps, and controller will be housed in a small, air-conditioned building. Feed piping from the storage tanks will be routed to the day tank inside the building. The dual-walled day tank will feed sodium hypochlorite to the chemical feed pumps at the upstream end of the 27-inch pipeline.

Secondary containment will be provided for the outdoor storage tanks. It will contain a volume of 3,500-gallons (the volume of the largest container). Emergency eyewash and shower facilities will be provided at the site.

The sodium hypochlorite facility will adhere to distances and setbacks from property lines and adjacent public roads (20 feet) in accordance with Uniform Fire Code (UFC) Section 8001.15.4.2. In order to meet the required setbacks, it is proposed that the southerly levee of Pond 68 be removed and relocated approximately 45 feet to the north.

7.1.3 Alternative Water Supplies

The State Water Resources Control Board Policy 75-58 specifies that to protect water quality and quantity, cooling water for power plants should come from the following sources (in order of preference):

1. Wastewater being discharged to the ocean
2. Ocean
3. Brackish water from natural sources or irrigation return flow
4. Inland wastewater of low TDS
5. Other inland waters

In the case of CVEC, one of the dominant reasons why the site was selected was because of the availability of a large quantity of reclaimed water from the WWTF. In part, CVEC selected the proposed location because of available water and electric transmission, as well as the opportunity to benefit Fresno County by reducing the impaired water mound under the WWTF.

The proposed CVEC would be over 100 miles from the ocean, and therefore, the first two water sources are not feasible alternatives. Similarly there are no sources of naturally brackish water in the vicinity. The dominant agricultural uses in the project area are irrigated but the supply would be of variable quality and vary greatly during the year. Although use of irrigation return flow might be feasible, it is not as reliable a supply as reclaimed water from the WWTF. Also, use of irrigation tail water would not assist the City and County of Fresno in reducing the impaired water mound under the WWTF.

The Applicant believes using reclaimed water from the WWTF is appropriate, will benefit the City and County of Fresno, and is consistent with Policy 75-58.

7.1.4 Reclaimed Water Conveyance Pipeline Route Alternatives

Several alternative routes were considered to convey water from the WWTF to the project (Figure 7.1-3). Site surveys were conducted to identify routes according to the following evaluation criteria:

- Institutional factors (e.g., ease of obtaining ROW, public agency support, required permits, etc.)
- Engineering & construction feasibility
- Length of the pipeline/cost
- Potential environmental impacts

Four primary alternatives (Alternatives W1, W2, W3, and W4) were identified for further analysis and comparison. These four alternatives are presented in Figure 7.1-3 and described in detail below.

Each alternative includes installing a 27-inch pipeline from the WWTF to the CVEC site. The conveyance piping for all alternatives would begin at the intersection of North Avenue and an extension of Grantland Avenue. The pipeline in each alternative would cross State Highway 145, the James Bypass, a large irrigation canal, and the Union Pacific Railroad tracks.

Alternative W1 (Proposed Alternative)

This alternative would consist of approximately 20.5 miles of 27-inch pipeline. It would start at North Avenue and an extension of Grantland Avenue, go west along North Avenue, south along Chateau Fresno Avenue, west along Lincoln Avenue, south along Jameson Avenue, west along Manning Avenue, and south along Placer Avenue to the project site. The Chateau Fresno Avenue segment of Alternative W1 between Muscat Avenue and Lincoln Avenue consists of privately owned property.

A sub-alternative to the 2-mile overland segment and Lincoln Avenue segment of Alternative W1 would follow Muscat Avenue west to Dickenson Avenue, south along Dickenson Avenue, and southwest along McMullin Grade to Jameson Avenue. This sub-alternative would reduce the total length of Alternative W1 by approximately 0.5 mile and would likely reduce the amount of permanent easement to be acquired from private landowners. However, preliminary surveys indicated that this sub-alternative would potentially result in more conflicts with existing utilities and would likely require greater traffic control during construction. Therefore, this sub-alternative was not evaluated further.

Alternative W2

This alternative would consist of approximately 23 miles of 27-inch pipeline. It would start at North Avenue and an extension of Grantland Avenue, go southeast along the WWTF boundary, east along Central Avenue, south along Hayes Avenue, west along South Avenue, south along Grantland Avenue, west along Manning Avenue, and south along Placer Avenue to the project site.

Alternative W3

This alternative would include approximately 18.5 miles of 27-inch pipeline. It begins at North Avenue and an extension of Grantland Avenue, heads west along North Avenue, south along Chateau Fresno Avenue, west along Muscat Avenue, south along Dickenson Avenue, southwest along McMullin Grade, west along Manning Avenue, and south along Placer Avenue to the project site.

Alternative W4

This alternative would consist of approximately 21 miles of 27-inch pipeline installed from the Fresno WWTP at North Avenue and an extension of Grantland Avenue. The pipeline would then head west along North Avenue, south along Madera Avenue (State Highway 145), west along American Avenue, and south along Placer Avenue to the project site.

Institutional Factors

For each of the reclaimed water conveyance alternatives, County and Union Pacific Railroad (UPRR) encroachment permits would be required. Preliminary meetings with Fresno County indicate that all routes and crossings under consideration are feasible (reference Record of Meeting and personal communications). One sub-alternative to Alternative W1 would require a private easement along the extension of Chateau Fresno Avenue between Central Avenue and Lincoln Avenue. Alternative W4 would also require private easements because Caltrans generally does not allow longitudinal encroachments. Alternative W3 could disturb potentially sensitive habitat areas adjacent to McMullin Grade. The pipeline could be constructed in this area, but would potentially require permits from the U.S. Army Corps of Engineers and/or CDFG. Each of the alternative routes would cross two existing creek beds. Alternative W4 passes two landfills and one sub-alternative to Alternative W1 passes one landfill.

Engineering/Construction Feasibility

Each alternative would involve open-cut trenching techniques. The pipeline will cross State Highway 145, the James Bypass (which contains two creek crossings and a large irrigation canal), and UPRR railroad tracks. Pavement restoration will likely be required for alternatives that follow county roadways; however, every effort will be made to locate the pipeline outside of the paved road section where existing road ROW is available. Traffic control will also be required for alternatives that follow roadways. Traffic on most roads is light and limited to local travel. Alternative routes are also available to regional traffic. Exceptions are McMullin Grade, Dickenson Avenue, and Madera Avenue, which carry higher traffic volumes. Since the pipeline would be routed outside of the McMullin Grade and Dickenson Avenue road sections, traffic control requirements would be relatively insignificant despite the higher traffic volumes on these roads. As noted above, an

alignment following Madera Avenue would require that the pipeline be routed outside of the traveled road section because Caltrans typically does not approve longitudinal encroachments.

Length of Pipeline

The longest reclaimed water pipeline is associated with Alternative W2, which is 23 miles long. Alternative W3 is the shortest at 18.5 miles long. The proposed alternative (Alternative W1) is 20.5 miles long, but would be 0.5 mile shorter if Dickenson Avenue and McMullin Grade were used instead of Chateau Fresno Avenue and Lincoln Avenue. Alternative W4 is 21 miles long.

Environmental Factors

Each of the pipeline routes pass primarily through agricultural land or land that is already disturbed, typically by a roadway. Potential environmental impacts from pipeline construction would be to biological, cultural/paleontological, or traffic and transportation resources. The proposed routes were surveyed for biological and cultural/paleontological impacts. Potential impacts from the proposed routes are discussed in Section 8 of this document.

Alternative W3 is shorter than other alternatives, but passes through potentially sensitive biological habitat adjacent to McMullin grade.

The James Bypass crossing, which involves two creek bed crossings and an irrigation canal crossing, could result in more significant biological and hydrological resources impacts; using trenchless technology, however, would mitigate these impacts. Alternative W4 would involve construction along American Avenue and Madera Avenue, which would result in significant traffic impacts because of the traffic volumes on those roadways. Acquiring private easements along the road, however, would reduce these impacts.

7.1.4.1 Selection of Proposed Water Supply Pipeline Route

Based on the institutional factors, engineering/construction feasibility, length of pipeline, and environmental factors, the alignment selected as the proposed alternative is Alternative W1.

Table 7.1-2 provides a summary of how each alternative rates against the selection criteria.

TABLE 7.1-2
Comparison Summary of Alternatives

	Reclaimed Water Conveyance, Pipeline Route Alternatives			
Criteria	**W1**	**W2**	**W3**	**W4**
Institutional Factors	◐	○	◐	●
Engineering/ Construction Feasibility	○	◐	◐	◐
Length of Pipeline	◐	●	○	◐
Environmental Factors	○	○	◐	◐

Legend

● Potential for impacts is HIGH compared to other alternatives

◐ Potential for impacts is MODERATE compared to other alternatives

○ Potential for impacts is LOW

7.1.5 Construction Practices

7.1.5.1 Reclaimed Water Supply Pipeline

Given the diameter of the proposed pipeline, welded steel, ductile iron, concrete cylinder pipe with pretensioned steel, or high-density polyethylene could be used. Construction of the pipelines is anticipated to be accomplished using primarily open cut construction.

Paving equipment would be used to replace the pavement removed as part of the pipeline construction. The construction labor needed to complete this project is discussed in Section 8.8, Socioeconomics.

The width of the construction work area will be approximately as follows:

- Diameter of pipe: 27 inches
- Width of trench: 4 feet
- Width of permanent easement: 15 to 20 feet
- Width of temporary construction easement in addition to permanent easement: 25 to 50 feet (therefore, the maximum width of "impact" area, including both the permanent and temporary easements, could be 70 feet.)

Along the water supply pipeline alignment there are a few areas that will require lay-down space to temporarily store pipe and stockpile excavated material from the trench. The first area is located on the cross-country extension of Chateau Fresno Avenue from Central Avenue to approximately one mile south of Central Avenue. In this area, vineyards are on both sides of the alignment and the open space between the vineyards is too narrow to accommodate lay-down area uses. This same situation occurs in two locations along Lincoln Avenue and a few locations along Manning Avenue.

The acreage required for the lay-down areas will vary depending upon the length of the alignment impacted by the vineyards, but it can be accommodated in the temporary and permanent easements on either side of the vineyards. The maximum area required will be approximately 1.1 acres. The construction contract documents will require the contractor to develop a parking and laydown plan to be approved by the Engineer. The plan will require that the contractor move his parking and laydown areas along the alignment as the pipeline is installed.

Construction of the pipelines is expected to begin within the first year following the start of project construction. The first month or two would be used to acquire materials and mobilize. Total construction time is expected to be 10 to 12 months, including mobilization.

7.1.5.2 Reclamation Wells and Appurtenant Facilities

Reclamation wells will be constructed in conformance with Fresno County and normal construction standards for wells. The wells will be similar in design to the new "Flowpath" wells recently installed by the City, shown in Figure 7.1-4. A well installation permit will be acquired and the requirements of that permit will be adhered to. No drilling mud will be allowed to escape into the environment, and the well casing will be such that no surface waters will be able to enter the aquifer.

The sodium hypochlorite storage and feed system will be constructed on City property near the reclamation well site, as described above.

The 12-kV overhead electrical distribution line extensions required for providing electrical power to the proposed well pumps will be constructed in accordance with the local codes, the latest edition of the National Electrical Code, and the Rules for Overhead Electric Line Construction, General Order No. 95.

7.2 Domestic Use Water

Domestic water for drinking, showers, sinks and general sanitary purposes would be provided by the City of San Joaquin from groundwater wells. The City has a Master Plan to increase from three to six wells as the community grows. The nearest well is located on Railroad Avenue, approximately 0.5 mile north of the site. The water supply needed for domestic water to CVEC is estimated at less than 3 afy.

As of 1994, the City served a population of 2,781, with an average water demand of 170 gallons per capita per day (gpcd), for a total of 530 acre-feet. The estimated growth rate at the time was 2.8 percent, and water master planning anticipated a constant 175 gpcd demand through the year 2020. Projected population as of 2001 was 3,374, with a total demand of 215 million gallons per year. The additional demand of 3 afy is considered insignificant by the City (Horne, 2001).

Fresno County adopted a comprehensive strategy to enhance and maintain the quantity and quality of local groundwater in the Groundwater Management Plan (Fresno, 1997). The plan specifies a strategy of using conservation, water recycling, groundwater banking, managing groundwater contamination, and developing additional surface water storage to provide for future increases in demand and eliminate overdraft. The County believes the groundwater issues can be resolved without regulations and restrictions on groundwater pumping (Fresno County, 2000 *in* City of San Joaquin, 2001).

7.3 Process Makeup Water

During average operating conditions, blowdown water from the cooling towers would be treated onsite to provide process makeup water. During peak operating conditions, a portion of the incoming water supply would be allocated to process makeup water. Details of the plant water cycle and process makeup water treatment are discussed in Section 2.0, Project Description.

7.4 Laws, Ordinances, Regulations, and Standards

A summary of the permits required, and the permitting agency for the use of reclaimed water are shown in Table 7.4-1.

TABLE 7.4-1
Permits and Permitting Agencies for CVEC Water Supply[a]

Permit or Approval	Schedule	Applicability	Agency Contact
Application for Report of Waste Discharge	Anticipated to be submitted October 2001. Permit to be obtained 150 days after submission.	Use of reclaimed water supply	RWQCB Jo Anne Kipps Senior Water Resource Control Engineer 3614 East Ashlan Avenue Fresno, California 93726 559-445-5035 AND Department of Health Services Cindy Forbes Chief, S. CA Branch, Drinking Water 1040 East Herndon, Ste. 205 Fresno, CA 93720 559-447-3130

TABLE 7.4-1
Permits and Permitting Agencies for CVEC Water Supply[a]

Permit or Approval	Schedule	Applicability	Agency Contact
Encroachment Permit	To be submitted when construction contract documents are finalized. Permit to be issued 60 days after submission.	Work performed on or within Caltrans ROW to install reclaimed water line	Caltrans Jim Perrault 826 L Street Fresno, CA 93721 559-488-4058
Encroachment Permit	To be submitted when construction contract documents are finalized. Permit to be issued 45 days after submission.	Work performed on or within UPRR ROW to install reclaimed water line	Union Pacific Railroad Mary Hauschild 1800 Farnam Omaha, NE 68108 402-997-3553
Well Drilling Permit	To be submitted prior to construction of reclamation or test wells.	To register test wells for construction and/or reclamation	Fresno County Dept. of Environmental Health, Environmental Health System Permit Officer on Duty P.O. Box 11867 Fresno, CA 93775 559-445-3537

[a] See Table 8.14-7 for additional permits related to water supply compliance.

7.5 References

Brogan, R. 2001. County of Fresno, Director of Public Works. Personal communication with Kevin Bradford of CH2M HILL, June 21.

City of San Joaquin. 2001. Southeast Area Annexation. (General Plan Amendment/Rezoning). Planning Partners. May.

City of San Joaquin. 1995. Water Master Plan. Prepared by Yamabe & Horn Engineering, Inc. July.

Fresno, County of, 2000. General Plan. August.

Fresno, County of, 1997. Groundwater Management Plan.

Horne, G. 2001. City Engineer to San Joaquin. Personal Communication with EJ Koford of CH2M HILL, September 19.

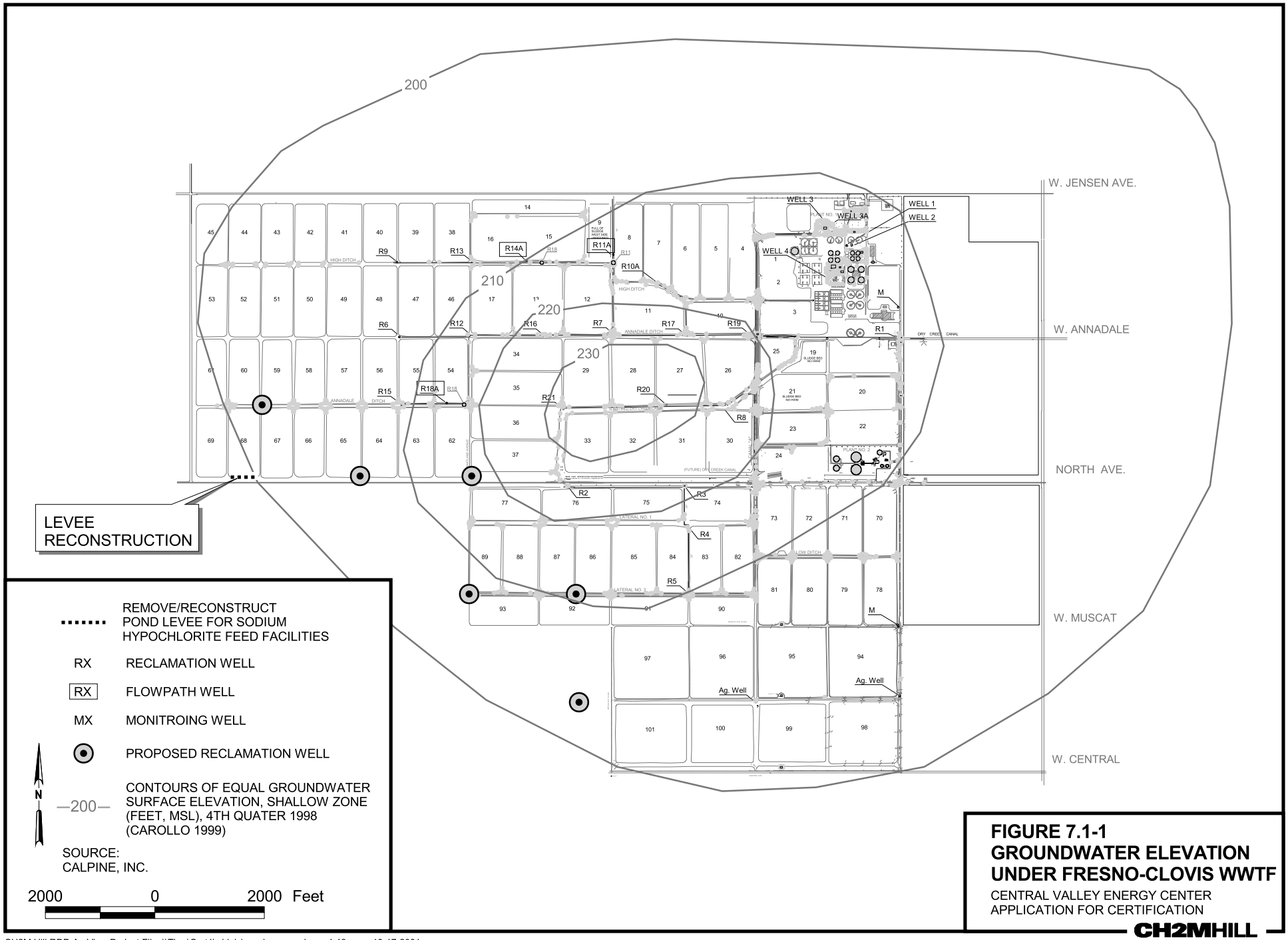

FIGURE 7.1-1
GROUNDWATER ELEVATION UNDER FRESNO-CLOVIS WWTF

CENTRAL VALLEY ENERGY CENTER
APPLICATION FOR CERTIFICATION

CH2MHILL

CH2M Hill RDD ArcView Project File \\Thor\Cart1\rddgis\cvec\cvec_cad.apr 4:46 p.m. 10-17-2001

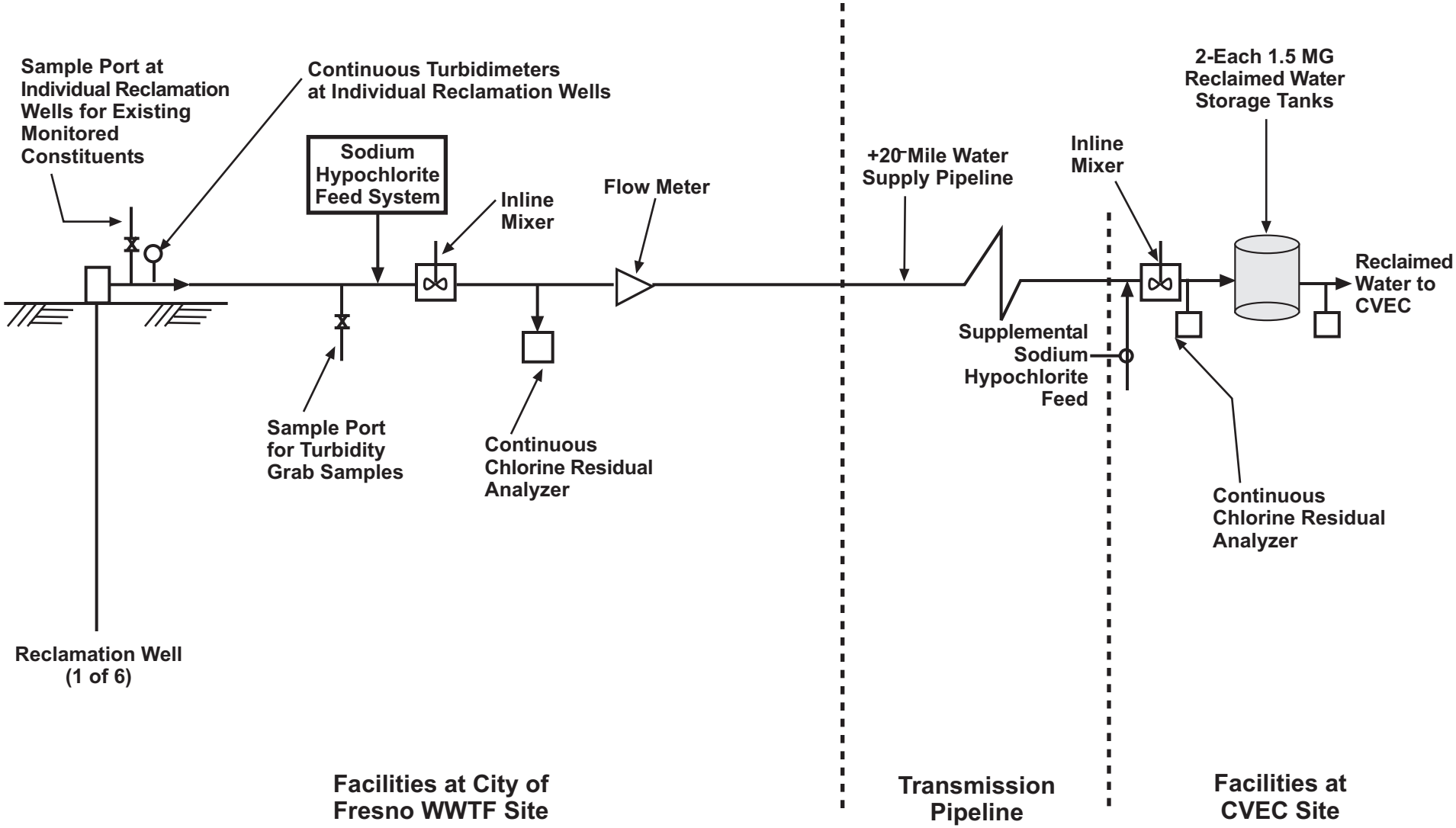

FIGURE 7.1-2
SCHEMATIC OF PROPOSED RECLAIMED WATER TREATMENT FACILITIES
CENTRAL VALLEY ENERGY CENTER APPLICATION FOR CERTIFICATION

CH2MHILL

3402_19 (10/23/01)

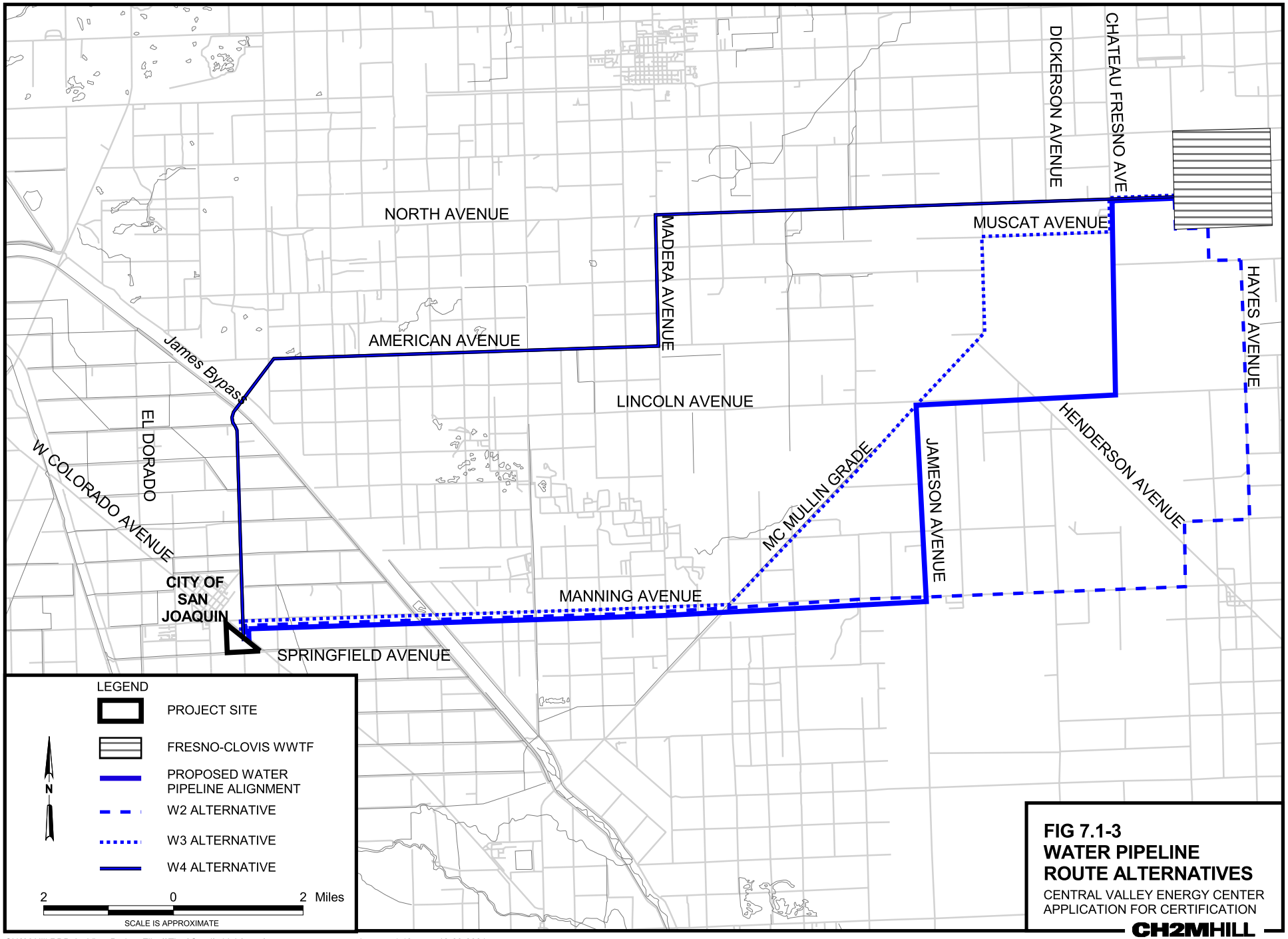

FIG 7.1-3
WATER PIPELINE ROUTE ALTERNATIVES
CENTRAL VALLEY ENERGY CENTER
APPLICATION FOR CERTIFICATION
CH2MHILL

CH2M Hill RDD ArcView Project File \\Thor\Cart1\rddgis\cvec\cvec_gas_water_species.apr 4:40 p.m. 10-23-2001

NOTES:

A: FINISH GRADE

B: 50 L.F. SIX SACK MIX CONCRETE GROUT FLUSH TO FINISH GRADE

C: PLACE GRAVEL FILTER PACK 24" BELOW FINISH GRADE

D: THERE SHALL BE 1" MIN CLEARANCE BETWEEN PIPES AND CASING AT SURFACE. PIPES SHALL EXTEND 1" MIN. ABOVE FINISH GRADE

E: 50 L.F. 34" X 5/6" CONDUCTOR CASING

F. 83 L.F. 20" X 5/16" BLANK CASING

G: 160 L.F. OF 20" X 5/16" PERFORATED CASING .060 HORIZONTAL LOUVERS

I: 220 L.F. 2" BLACK IRON PIPE SOUNDING TUBE WITH CAP 11 1/4 DEG BEND WELD TO CASING

J: 251 L.F. OF #6 X #16 SILICA RESOURCES GRAVEL FILTER PACK

M: 10 L.F. 16" X 5/16" BLANK CASING WITH BOTTOM CAP

N: 20 L.F. OF 16" X 5/16" PERFORATED CASING WINDOWS

O: 16" X 20" TAPER

P: 223 L.F. 16" X 5/6" BLANK CASING

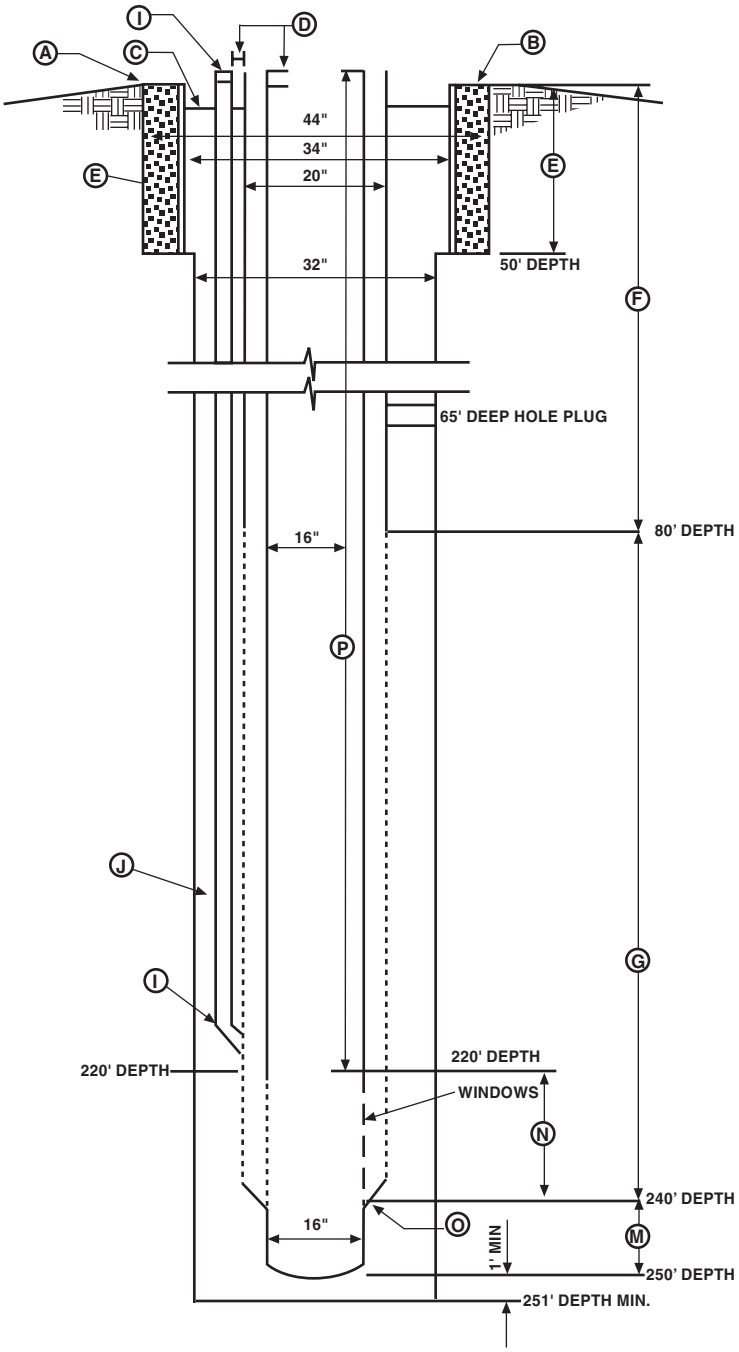

TOTAL WELL DEPTH 251' (MIN)

REVERSE ROTARY GRAVEL ENVELOPE WELL PRODUCTION WATER WELL

N.T.S.

Source: City of Fresno

FIGURE 7.1-4
EXISTING FLOWPATH WELL
CENTRAL VALLEY ENERGY CENTER APPLICATION FOR CERTIFICATION

CH2MHILL

3402_14 (10/23/01)