SECTION 5.0

Electric Transmission

5.1 Introduction

This section discusses the transmission interconnection between the District, CPP, and the existing electrical grid.

The proposed CPP site is located on the existing District property in Sacramento County, east of the town of Herald, California, that is also the site of the decommissioned Rancho Seco Plant. This location was selected because of the land availability and the proximity of the Rancho Seco Plant 230-kV switchyard that used to serve the nuclear generating station. The switchyard will deliver the power generated at CPP to the Northern California electric grid (Figure 5.1-1) and the SMUD Transmission System (Figure 5.1-2).

Since CPP will be a replacement for the Rancho Seco Plant and is nearly identical in total generating capacity, the distribution system in the area has sufficient capability to distribute the power from CPP.

The CPP facility will have a new 230-kV switchyard installed at the plant that is approximately 0.4 mile south of the Rancho Seco Plant 230-kV switchyard. The proximity of these two facilities allows for a short transmission line for the electrical interconnection. The District will own and operate both switchyards and the inter-connecting transmission system.

5.2 Applicable Laws, Ordinances, Regulations, and Standards

This section provides a list of applicable LORS that apply to the transmission line, substations, and engineering. The following compilation of LORS is in response to Section (h), of Appendix B attached to Article 6, of Chapter 5, of Title 20 of the California Code of Regulations. Inclusion of these data is further outlined in the CEC's publication titled *Rules of Practice and Procedure & Generating Facility Site Certification Regulations.* The project's design will conform with these LORS.

5.2.1 Design and Construction

Table 5.2-1 lists the applicable LORS for the design and construction of the preferred transmission line and substations.

TABLE 5.2-1
Design and Construction Laws, Ordinances, and Standards Applicable to CPP Electric Transmission

LORS	Applicability	AFC Conformance Section
GO-95, CPUC, "Rules for Overhead Electric Line Construction"	CPUC rule covers required clearances, grounding techniques, maintenance, and inspection requirements	Section 5.3.2.2 Section 5.6.1
Title 8 California Code of Regulations (CCR), Section 2700 et seq. "High Voltage Electrical Safety Orders"	Establishes essential requirements and minimum standards for installation, operation, and maintenance of electrical installation and equipment to provide practical safety and freedom from danger	Section 5.3.2
General Order 128 (GO-128), CPUC, "Rules for Construction of Underground Electric Supply and Communications Systems"	Establishes requirements and minimum standards to be used for the station AC power and communications circuits	Section 5.3.2.1 Section 5.3.2.2 Section 5.3.2.3
General Order 52 (GO-52), CPUC, "Construction and Operation of Power and Communication Lines"	Applies to the design of facilities to provide or mitigate inductive interference	Section 5.3.2.2 Section 5.6.1
ANSI/IEEE 693 "IEEE Recommended Practices for Seismic Design of Substations"	Provides recommended design and construction practices	Section 5.3.2.1 Section 5.3.2.3
IEEE 1119 "IEEE Guide for Fence Safety Clearances in Electric-Supply Stations"	Provides recommended clearance practices to protect persons outside the facility from electric shock	Section 5.3.2.2 Section 5.6.1 Section 5.6.2.6
IEEE 998 "Direct Lightning Stroke Shielding of Substations"	Provides recommendations to protect electrical system from direct lightning strokes	Section 5.3.2.1 Section 5.3.2.2 Section 5.3.2.3
IEEE 980 "Containment of Oil Spills for Substations"	Provides recommendations to prevent release of fluids into the environment	Section 5.3.2.1 Section 5.3.2.2 Section 5.3.2.3
Suggested Practices for Raptor Protection on Powerlines, April 1996	Provided guidelines to avoid raptor collision or electrocution	

5.2.2 Electric and Magnetic Fields

The applicable LORS pertaining to electric and magnetic field interference are tabulated in Table 5.2-2.

TABLE 5.2-2
Electric and Magnetic Field Laws, Ordinances, and Standards Applicable to CPP Electric Transmission

LORS	Applicability	AFC Conformance Section
Decision 93-11-013 of the CPUC	CPUC position on EMF reduction	Section 5.6.1 Section 5.6.2.4
General Order 131-D (GO-131), CPUC, Rules for Planning and Construction of Electric Generation, Line, and Substation Facilities in California	CPUC construction-application requirements, including requirements related to EMF reduction	Section 5.3.2 Section 5.6.1 Section 5.6.2.4
District "Transmission Line EMF Design Guidelines"	Large local electric utility's guidelines for EMF reduction through tower design, conductor configuration, circuit phasing, and load balancing. (In keeping with CPUC D.93-11-013 and GO-131)	Section 5.3.2 Section 5.6.2.4
ANSI/IEEE 644-1994 "Standard Procedures for Measurement of Power Frequency Electric and Magnetic Fields from AC Powerlines"	Standard procedure for measuring EMF from an electric line that is in service	Section 5.6.2.4

5.2.3 Hazardous Shock

Table 5.2-3 lists the LORS regarding hazardous shock protection for the project.

TABLE 5.2-3
Hazardous Shock Laws, Ordinances, and Standards Applicable to CPP Electric Transmission

LORS	Applicability	AFC Conformance Section
8 CCR 2700 et seq. "High Voltage Electrical Safety Orders"	Establishes essential requirements and minimum standards for installation, operation, and maintenance of electrical equipment to provide practical safety and freedom from danger	Section 5.3.2 Section 5.6.2.6
ANSI/IEEE 80 "IEEE Guide for Safety in AC Substation Grounding"	Presents guidelines for ensuring safety through proper grounding of AC outdoor substations	Section 5.3.2 Section 5.6.2.6
National Electrical Safety Code (NESC), ANSI C2, Section 9, Article 92, Paragraph E; Article 93, Paragraph C	Covers grounding methods for electrical supply and communications facilities	Section 5.3.2.1 Section 5.3.2.2 Section 5.3.2.3 Section 5.6.2.6

5.2.4 Communications Interference

The applicable LORS pertaining to communication interference are tabulated in Table 5.2-4.

TABLE 5.2-4
Communications Interference Laws, Ordinances, and Standards Applicable to CPP Electric Transmission

LORS	Applicability	AFC Conformance Section
47 CFR 15.25, "Operating Requirements, Incidental Radiation"	Prohibits operations of any device emitting incidental radiation that causes interference to communications. The regulation also requires mitigation for any device that causes interference	Section 5.3.2 Section 5.6.2.1 Section 5.6.2.3 Section 5.6.2.4 Section 5.6.2.6
General Order 52 (GO-52), CPUC	Covers all aspects of the construction, operation, and maintenance of power and communication lines and specifically applies to the prevention or mitigation of inductive interference	Section 5.3.2 Section 5.2.2.1 Section 5.6.2.4 Section 5.6.2.6
CEC staff, Radio Interference and Television Interference (RI-TVI) Criteria (Kern River Cogeneration) Project 82-AFC-2, Final Decision, Compliance Plan 13-7	Prescribes the CEC's RI-TVI mitigation requirements, developed and adopted by the CEC in past siting cases	Section 5.3.2.1 Section 5.3.2.2 Section 5.6.2.4

5.2.5 Aviation Safety

Table 5.2-5 lists the aviation safety LORS that may apply to the proposed construction and operation of the CPP.

TABLE 5.2-5
Aviation Safety Laws, Ordinances, and Standards Applicable to CPP Electric Transmission

LORS	Applicability	AFC Conformance Section
14 CFR Part 77 "Objects Affecting Navigable Airspace"	Describes the criteria used to determine whether a "Notice of Proposed Construction or Alteration" (NPCA, FAA Form 7460-1) is required for potential obstruction hazards	Section 5.3.2 Section 5.6.3
FAA Advisory Circular No. 70/7460-1G, "Obstruction Marking and Lighting"	Describes the FAA standards for marking and lighting of obstructions as identified by Federal Aviation Regulations Part 77	Section 5.3.2 Section 5.6.3
Public Utilities Code (PUC), Sections 21656-21660	Discusses the permit requirements for construction of possible obstructions in the vicinity of aircraft landing areas, in navigable airspace, and near the boundary of airports	Section 5.3.2 Section 5.6.3

5.2.6 Fire Hazards

Table 5.2-6 tabulates the LORS governing fire hazard protection for the CPP project.

TABLE 5.2-6
Fire Hazard Laws, Ordinances, and Standards Applicable to CPP Electric Transmission

LORS	Applicability	AFC Conformance Section
14 CCR 1250-1258, "Fire Prevention Standards for Electric Utilities"	Provides specific exemptions from electric pole and tower firebreak and electric conductor clearance standards, and specifies when and where standards apply	Section 5.3.2.2 Section 5.6.4
ANSI/IEEE 80 "IEEE Guide for Safety in AC Substation Grounding"	Presents guidelines for ensuring safety through proper grounding of AC outdoor substations	Section 5.3.2.1 Section 5.3.2.3 Section 5.6.4
General Order 95 (GO-95), CPUC, "Rules for Overhead Electric Line Construction" Section 35	CPUC rule covers all aspects of design, construction, operation, and maintenance of electrical transmission line and fire safety (hazards)	Section 5.3.2.2 Section 5.6.4

5.2.7 Jurisdictional Agencies

Table 5.2-7 identifies national, state, and local agencies with jurisdiction to issue permits or approvals, conduct inspections, and/or enforce the above-referenced LORS. Table 5.2-7 also identifies the associated responsibilities of these agencies as they relate to the construction and operation of CPP.

TABLE 5.2-7
Jurisdictional Agencies for CPP Electric Transmission

Agency or Jurisdiction	Responsibility
CEC	Jurisdiction over new transmission lines associated with thermal generating facilities that are 50 MW or more (PRC 25500)
CEC	Jurisdiction of lines out of a thermal generating facility to the interconnection point to the utility grid (PRC 25107)
CEC	Jurisdiction over modifications of existing facilities that increase peak operating voltage or peak kilowatt capacity 25 percent (PRC 25123)
CPUC	Regulates construction and operation of overhead transmission lines. (General Order No. 95) (Those not regulated by the CEC)
CPUC	Regulates construction and operation of power and communications lines for the prevention of inductive interference (General Order No. 52)
FAA	Establishes regulations for marking and lighting of obstructions in navigable airspace (AC No. 70/7460-1G)
Local Electrical Inspector	Jurisdiction over safety inspection of electrical installations that connect to the supply of electricity (NFPA 70)

TABLE 5.2-7
Jurisdictional Agencies for CPP Electric Transmission

Agency or Jurisdiction	Responsibility
Western Systems Coordinating Council (WSCC)	Establishes power supply design criteria to improve reliability of the power system
County of Sacramento	Establishes and enforces zoning regulations for specific land uses. Issues variances in accordance with zoning ordinances
	Issues and enforces certain ordinances and regulations concerning fire prevention

5.3 Transmission Interconnection

This section discusses the transmission facilities of the CPP project and the interconnection with the District's existing distribution system, and other systems in the vicinity.

5.3.1 Existing Electrical Transmission Facilities

Twin 230-kV double circuit transmission lines were built to connect the Rancho Seco Plant to the District's grid and exist today as an integral part of the District's distribution system. These lines originate at the Rancho Seco Plant switchyard and continue in a westerly direction. In the city of Elk Grove, one double circuit line turns north and connects to the Elk Grove substation, then continues again northward to the Hedge substation. The second double circuit line runs farther west after Elk Grove, then turns north at the town of Franklin where it connects to the Pocket substation. In addition, a 230-kV double circuit PG&E transmission line originates at the Rancho Seco Plant switchyard and runs north to south over District property before continuing on to the Bellotta substation. Figure 5.1-1 shows the Northern California region transmission system.

The proposed CPP site is approximately 30 acres in size and is located north of Clay East Road directly adjacent to and east of the PG&E transmission line easement which runs north to south at this location (Figure 5.3-1). The PG&E transmission lines transmit power from the Rancho Seco Plant switchyard to the PG&E Bellotta substation. The existing Rancho Seco Plant switchyard is located approximately 0.4 mile north of the CPP switchyard.

The Rancho Seco Plant switchyard was installed at the time that the Rancho Seco Plant was built and was used to distribute the power generated by the nuclear plant into the Northern California grid. It also provided a source of start-up and auxiliary power for the nuclear plant. Since the nuclear plant's decommissioning process, the switchyard has been used by the District as a major distribution and switching station for its system.

5.3.2 Proposed Transmission Interconnection System

The interconnection between the new CPP switchyard and the existing Rancho Seco Plant switchyard will consist of the following major facilities:

- Two new overhead lines on dual line monopole tower structures extending approximately 0.4 mile from the CPP switchyard to the existing Rancho Seco Plant switchyard
- New 230-kV breaker-and-a-half switchyard adjacent to the CPP power block
- Modifications to the Rancho Seco Plant switchyard by the addition of a two-circuit breaker bay to the south end that will allow connection directly to the West Bus (23A) and the East Bus (23B). As a result of the CPP physical orientation on the proposed site, the transmission interconnection will exit the CPP switchyard directly to the north toward the Rancho Seco Plant 230-kV switchyard.

5.3.2.1 Cosumnes Power Plant Switchyard Characteristics

The CPP switchyard will consist of nine, 230-kV SF_6 insulated circuit breakers. A breaker-and-a-half arrangement will be used in the switchyard to obtain a high level of service reliability. An electrical single-line diagram of the proposed CPP arrangement appears as Figure 5.3-2. The switchyard layout is shown on Figure 5.3-3.

The switchyard and all equipment will be designed for a 63-kiloampere (kA) interrupting capacity. The main buses will be designed for 4,000-amp continuous current. The bays will be designed for 2,000-amp continuous current. Strain bus will be used for the main buses. Either rigid aluminum bus structures or strain bus will be used for the interconnecting buses in the bays. As depicted on Figure 5.3-2, each generator will be provided with an independent tie to the switchyard. The CPP switchyard will connect to the existing Rancho Seco Plant switchyard through two circuits on a single monopole tower line. Each circuit will be able to continuously carry approximately 4,000 amps.

Because the total output of the CPP switchyard is expected to be in the range of 3,000 to 4,000 amps, either or both lines must be in service to transmit the full capacity of the facility to the Rancho Seco Plant switchyard. In the event that one circuit is out for maintenance or should one circuit fail, the remaining circuit would not be subject to an operational limitation.

Auxiliary power transformers connected to the step-up transformer side of the generator breakers on each gas turbine generator will serve to start up the plant and provide power for all auxiliary loads within the CPP. Power will be distributed via 5-kV metal-clad switchgear. Auxiliary AC and DC power will be derived from auxiliary power transformers and a station battery system, respectively. Local 69-kV service will power a reserved auxiliary transformer sized similarly to the main plant auxiliary transformers that will also be used as backup power.

The CPP switchyard will be provided with its own relay and control building that will house the protective relays and controls for the switchyard. This building will also contain a separate auxiliary DC power system with battery back up for relay power and breaker controls.

5.3.2.2 Overhead Line Characteristics

The 230-kV interconnecting transmission lines will be carried on double-circuit single-pole steel structures. The circuits will be sized for 1,500 megavolt amperes (MVA). The line will exit the CPP switchyard and align due north, parallel to and approximately 80 feet to the east of the existing PG&E easement, for approximately 0.3 mile, where it will bear northeast 0.1 mile toward the dead-end structure at the south end of the Rancho Seco Plant switchyard.

The overhead transmission line will use self-supporting tubular steel pole structures to hold the conductors. Figures 5.3-4a and 5.3-4b show the typical tangent structures proposed for the line. The PG&E Bellotta lines in the existing easement are carried on standard lattice type towers.

The steel poles will be 100 to 125 feet tall (125 feet maximum). Each circuit will exit the CPP switchyard in a slack-span configuration from the dead-end structures. The maximum height of the dead-end structure is 85 feet.

The transmission lines will be installed on property owned by the District. The intended route is shown on Figure 5.3-1. Currently, the dimensions are approximate, and final placement will depend on the final choices for the design, layout, and existing conditions in the field. There are no structures, trees, or significant undergrowth along this route.

5.3.2.3 Rancho Seco 230-kV Switchyard Characteristics and Modifications

As depicted on Figures 5.3-5 and 5.3-6, the Rancho Seco Plant switchyard will be modified to accept the connection of the transmission lines from CPP.

The existing main buses, West Bus 23A and East Bus 23B will be extended to the south into an empty expansion area of the switchyard. Here two new SF_6 insulated dead tank circuit breakers will be installed, one to connect the West Bus to Bus 1 of the CPP and one to connect the East Bus to Bus 2 of the CPP. All bus structures will be rigid aluminum. The circuit breakers and all buses will initially be rated to continuously carry 3,000 amps, upgradeable in the future to 4,000 amps. The switchyard expansion and all equipment will be designed for a 63-kA interrupting capacity. The arrangement, spacing and construction techniques used in the existing switchyard will be followed in the new bay. A double-circuit dead-end structure will be used to terminate the transmission lines coming from the CPP. All protective relays and controls for the expansion bay will be added to the existing switchyard control building.

5.4 Proposed Transmission Interconnection Alternatives

One of the primary reasons for choosing the proposed project site is its proximity to existing transmission lines of suitable load carrying capacity without major system alterations. The site and transmission corridor was chosen to minimize environmental consequences and nearness to public receptors by paralleling the existing PG&E Bellotta lines within District property. The proposed corridor is also the most direct route from the CPP switchyard to the Rancho Seco Plant switchyard. Further study of transmission interconnection alternatives was immediately rejected, as they pose no practicality for the project.

5.5 Interconnection System Impact Study

Interconnection studies include analysis of power flow, short circuit, transient stability, and other factors to assess the impacts of the transmission interconnection on the integrated transmission grid. The District performed the Transmission System Impact Study, which is located in Appendix 5A. Power flow analysis was performed using data initially developed by PG&E for transmission assessment studies provided to the California ISO. The data was further reviewed and refined by members of the Sacramento Area Transmission Planning Group while being prepared by Western Area Power Administration (Western) for a recently completed interconnection study.

No significant negative impacts were determined within the PG&E control area (Northern California) as a result of a 1,000-MW generation project (CPP) during normal, single contingency or double-line outages. This is true for cases with a 560-MW generation plant at Elverta and/or for cases without generation at Elverta during peak loading or peak demand. Results of Transfer Limit studies indicate that additional generation from CPP significantly improves the District/Roseville area load handling capability.

5.6 Transmission Line Safety and Nuisances

This section discusses safety and nuisance issues associated with the electrical interconnection for CPP. Construction and operation of the preferred overhead transmission line will be undertaken in a manner to ensure the safety of the public as well as maintenance and construction crews.

5.6.1 Electrical Clearances

Typical high-voltage overhead transmission lines are composed of bare conductors connected to supporting structures by means of porcelain, glass, or plastic insulators. The air surrounding the energized conductor acts as the insulating medium. Maintaining sufficient clearances, or air space, around the conductors to protect the public and utility workers is paramount to safe operation of the line. The safety clearance required around the conductors is determined by normal operating voltages, conductor temperatures, short-term abnormal voltages, wind-blown swinging conductors, contamination of the insulators, clearances for workers, and clearances for public safety. Minimum clearances are specified in the G.O. 95, 128 and/or National Electric Safety Code (NESC). Electric utilities, state regulators, and local ordinances may specify additional (more restrictive) clearances. Typically, clearances are specified for:

- Distance between the energized conductors themselves
- Distance between the energized conductors and the supporting structure
- Distance between the energized conductors and other power or communication wires on the same supporting structure, or between other power or communication wires above or below the conductors
- Distance from the energized conductors to the ground and features such as roadways, railroads, driveways, parking lots, navigable waterways, airports, etc.

- Distance from the energized conductors to buildings and signs
- Distance from the energized conductors to other parallel powerlines

The CPP transmission interconnection will be designed to meet all national, state, and local code clearance requirements. The minimum ground clearance for 230-kV transmission according to the NESC is 22.4 feet, based on the road-crossing minimum. The design clearance is for the maximum operating temperature of the line. Under normal conditions, the line operates well below maximum conductor temperature, and thus, the average clearance is much greater than the minimum. More in keeping with the District's guidelines, a height of 30 feet was chosen as representative for making electrical effects calculations for the 230-kV lines, where required. The final design value will be consistent with General Order 95 (GO-95) of the California Public Utilities Commission (CPUC), and the District's guidelines for electric and magnetic field (EMF) reduction.

5.6.2 Electrical Effects

The electrical effects of high-voltage transmission lines fall into two broad categories: corona effects and field effects. Corona is the ionization of the air that occurs at the surface of the energized conductor and suspension hardware because of the high electric field strength at the surface of the metal during certain conditions. Corona may result in radio and television reception interference, audible noise, light, and production of ozone. This study includes audible noise considerations only. Field effects are the voltages and currents that may be induced in nearby conducting objects. The transmission line's 60-Hz electric and magnetic fields cause these effects.

5.6.2.1 Electric and Magnetic Fields

Operating powerlines, like the energized components of electrical motors, home wiring, lighting, and all other electrical appliances, produce electric and magnetic fields, commonly referred to as EMF. The EMF produced by the alternating current electrical power system in the United States has a frequency of 60 Hz, meaning that the intensity and orientation of the field changes 60 times per second (see Appendix 5B).

The 60-Hz power line fields are considered to be extremely low frequency. Other common frequencies are AM radio, which operates up to 1,600,000 Hz (1,600 kHz); television, 890,000,000 Hz (890 MHz); cellular telephones, 900,000,000 Hz (900 MHz); microwave ovens, 2,450,000,000 Hz (2.4 GHz); and X-rays, about 1 billion (10^{18}) hertz. Higher frequency fields have shorter wavelengths and greater energy in the field. Microwave wavelengths are a few inches long and have enough energy to cause heating in conducting objects. Higher frequencies, such as X-rays, have enough energy to cause ionization (breaking of molecular bonds). At the 60-Hz frequency associated with electric power transmission, the electric and magnetic fields have a wavelength of 3,100 miles and have very low energy that does not cause heating or ionization. The 60-Hz fields do not radiate, unlike radio-frequency fields.

Electric fields around transmission lines are produced by electrical charges on the energized conductor. Electric field strength is directly proportional to the line's voltage; that is, increased voltage produces a stronger electric field. The electric field is inversely proportional to the distance from the conductors, so that the electric field strength declines as the distance from the conductor increases. The strength of the electric field is measured in

units of kilovolts per meter (kV/m). The electric field around a transmission line remains practically steady and is not affected by the common daily and seasonal fluctuations in usage of electricity by customers.

Magnetic fields around transmission lines are produced by the level of current flow, measured in terms of amperes (amps), through the conductors. The magnetic field strength also is directly proportional to the current; that is, increased amperes produce a stronger magnetic field. The magnetic field is inversely proportional to the distance from the conductors. Like the electric field, the magnetic field strength declines as the distance from the conductor increases. Magnetic fields are expressed in units of milliGauss (mG). The amperes and, therefore, the magnetic field around a transmission line fluctuate daily and seasonally as the usage of electricity varies.

Considerable research has been conducted over the last 30 years on the possible biological effects and human health effects from EMF. This research has produced many studies that offer no uniform conclusions about whether or not long-term exposure to EMF is harmful. In the absence of conclusive or evocative evidence, some states, California in particular, have chosen not to specify maximum acceptable levels of EMF. Instead, these states mandate a program of prudent avoidance whereby EMF exposure to the public would be minimized by encouraging electric utilities to use low-cost techniques to reduce the levels of EMF.

5.6.2.2 Audible Noise

Corona is a function of the voltage of the line, the diameter of the conductor, and the condition of the conductor and suspension hardware. The electric field is directly related to the line voltage and is the greatest at the surface of the conductor.

Large-diameter conductors have lower electric field gradients at the conductor surface and, hence, lower corona than smaller conductors. Also, irregularities (such as nicks and scrapes on the conductor surface) or sharp edges on suspension hardware concentrate the electric field at these locations and, thus, increase corona at these spots. Similarly, contamination on the conductor surface, such as dust or insects, can cause irregularities that are a source for corona. Raindrops, snow, fog, and condensation are also sources of irregularities. Corona typically becomes a design concern for transmission lines having voltages of 345 kV and above.

5.6.2.3 EMF and Audible Noise Assumptions

The magnetic field is proportional to line loading (amps), which varies as generating facility generation is changed by the system operators to meet increases or decreases in demand for electrical power. The total output of the CPP is assumed to be 1,000 MW to 1,080 MW at a 0.85 power factor. At 230 kV, this power output is approximately 3,000 amps to 3,240 amps. The outgoing 230-kV transmission for the CPP will consist of two circuits on a single monopole tower line connecting the CPP to the existing Rancho Seco Plant switchyard. Since CPP will be a replacement for the Rancho Seco Plant, and is nearly identical in total generating capacity, the line-loading values used for the Rancho Seco Plant (AFC) 230-kV transmission line EMF calculations have not changed.

5.6.2.4 Transmission Line EMF Reduction

While California does not set a statutory limit for electric and magnetic field levels, the CPUC, which regulates electric transmission lines, mandates EMF reduction as a practicable design criterion for new and upgraded electrical facilities. As a result of this mandate, the regulated electric utilities, including the District, have developed their own design guidelines to reduce EMF at each new facility.

In keeping with the goal of EMF reduction, the interconnection of the CPP will be designed and constructed incorporating the directives of the CPUC by developing design procedures compliant with Decision 93-11-013 and General Orders 95, 128, and 131-D.

The primary techniques for reducing EMF anywhere along the line are to:

- Increase the distance between the conductors and EMF sensors
- Reduce the spacing between the line conductors
- Minimize the current on the line
- Optimize the configuration of the phases (A, B, C)

5.6.2.5 Conclusion on EMF and Audible Noise

After having evaluated the electrical effects of high-voltage transmission lines, it is the Applicant's conclusion that:

a) Electrical effects calculations do not have to be submitted with this application for the approximately 0.4-mile-long, 230-kV CPP interconnect transmission line since the transmission line is to be constructed on property wholly-owned by the District with no public receptors.

b) Electrical effects calculations do not have to be submitted with this application for the existing Rancho Seco Plant switchyard outlets since there is no change to the existing lines' electric field, audible noise or magnetic field as there is no change to the voltage, line configuration or current load. Furthermore, no changes to the existing lines are recommended.

5.6.2.6 Induced Current and Voltages

A conducting object such as a vehicle or person in an electric field will have induced voltages and currents. The strength of the induced current will depend upon the electric field strength, the size and shape of the conducting object, and the object-to-ground resistance. Examples of measured induced currents in a 1 kV/m electric field are about 0.016 milliamperes (mA) for a person, about 0.41 mA for a large school bus, and about 0.63 mA for a large trailer truck.

When a conducting object is isolated from the ground and a grounded person touches the object, a perceptible current or shock may occur as the current flows to ground. The amount of current depends upon the field strength, the size of the object, and the grounding resistance of the object and person. Shocks are classified as below perception, above perception, secondary, and primary. The mean perception level is 1.0 mA for a 180-pound man and 0.7 mA for a 120-pound woman. Secondary shocks cause no direct physiological harm, but may annoy a person and cause involuntary muscle contraction. The lower average secondary-shock level for an average-sized man is about 2 mA. Primary shocks can

be harmful. Their lower level is described as the current at which 99.5 percent of subjects can still voluntarily "let go" of the shocking electrode. For the 180-pound man this is 9 mA; for the 120-pound woman, 6 mA; and for children, 5 mA. The NESC specifies 5 mA as the maximum allowable short-circuit current to ground from vehicles, trucks, and equipment near transmission lines.

The mitigation for hazardous and nuisance shocks is to ensure that metallic objects on or near the ROW are grounded and that sufficient clearances are provided at roadways and parking lots to keep electric fields at these locations sufficiently low to prevent vehicle short-circuit currents below 5 mA.

Magnetic fields can also induce voltages and currents in conducting objects. Typically, this requires a long metallic object, such as a wire fence or an aboveground pipeline that is grounded at only one location. A person who closes an electrical loop by grounding the object at a different location will experience a shock similar to that described above for an ungrounded object. Mitigation for this is to ensure multiple grounds on fences or pipelines, especially those that are oriented parallel to the transmission line. This will be achieved by following the District's utility practice of grounding permanent metallic objects within transmission ROWs.

Where railroads are crossed or are parallel to the transmission line, coordination is required with the railroad company to ensure that the magnetically induced voltages and currents in the rails do not interfere with railroad signal and communications circuits, which often are transmitted through the rails.

The proposed 230-kV interconnection will be constructed in conformance with GO-95 and 8 CCR 2700 requirements. Therefore, hazardous shocks are unlikely to occur as a result of project construction or operation.

5.6.3 Aviation Safety

Federal Aviation Administration (FAA) Regulations, Part 77 establishes standards for determining obstructions in navigable airspace and sets forth requirements for notification of proposed construction. These regulations require FAA notification for any construction over 200 feet in height above ground level. Also, notification is required if the obstruction is more than specified heights and falls within any restricted airspace in the approach to airports. For airports with runways longer than 3,200 feet, the restricted space extends 20,000 feet (3.3 nautical miles) from the runway. For airports with runways 3,200 feet or less, the restricted space extends 10,000 feet (1.7 nautical miles). For heliports, the restricted space extends 5,000 feet (0.8 nautical mile).

There is no airport within 20,000 feet (3.3 nautical miles) of the proposed CPP. Although the project may need to notify the FAA of other tall elements of the project, the height of the transmission towers (125 feet maximum) does not trigger review.

5.6.4 Fire Hazards

The 230-kV transmission interconnection will be designed, constructed, and maintained in accordance with GO-95, which establishes clearances from other manmade and natural structures as well as tree-trimming requirements to mitigate fire hazards. There are no structures, trees, or significant undergrowth along the transmission line route.

5.7 References

California Public Service Commission, Decision 93-11-013.

California Public Service Commission, General Order 128-Rules for Construction of Underground Electric Supply and Communications Systems.

California Public Service Commission, General Order 131D-Rules for Planning and Construction of Electric Generation, Line, and Substation Facilities.

California Public Service Commission, General Order 52-Construction and Operation of Power and Communication Lines.

California Public Service Commission, General Order 95-Rules for Overhead Electric Line Construction.

Electric Power Research Institute, Palo Alto, Transmission Line Reference Book, 345-kV and Above, California, 1975.

Electric Power Research Institute, Transmission Line Reference Book, 115-138-kV Compact Line Design, Palo Alto, California, 1978.

Information for Decision Makers, Corona and Field Effects of AC Overhead Transmission Lines, IEEE Power Engineering Society, July 1985.

National Electrical Safety Code, ANSI C2.

Overhead Conductor Manual, Southwire.

U.S. Department of Energy, Electrical and Biological Effects of Transmission Lines, A Review, Bonneville Power Administration, Portland, Oregon, June 1989.

United States of America, 14CFR1250-1258-Fire Prevention Standards for Electric Utilities.

United States of America, 15CFR77-Objects Affecting Navigable Airspace.

United States of America, 47CFR15.25-Operating Requirements, Incidental Radiation.

Western Federal Energy Regulatory Commission (FERC) Form 715, 1999.

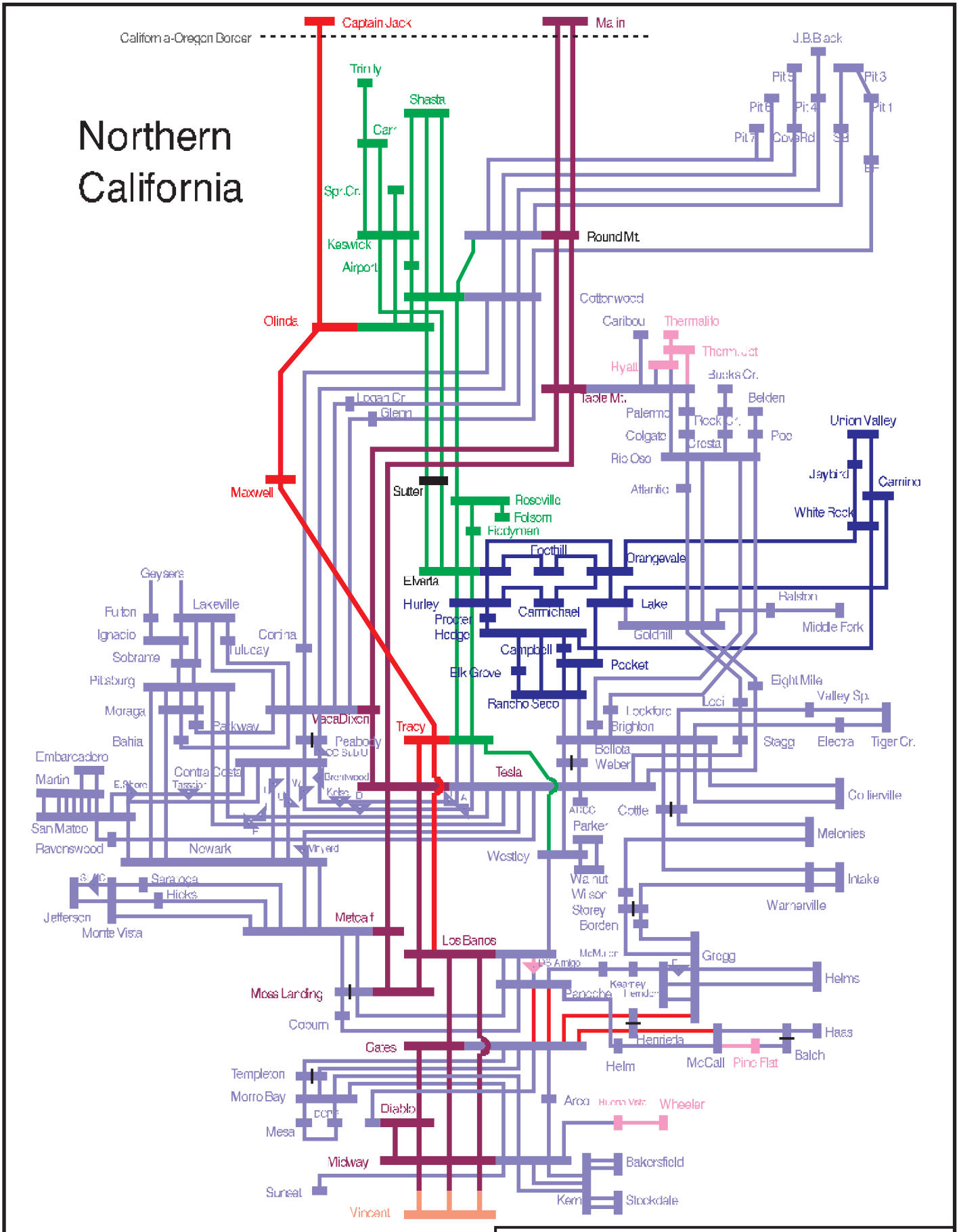

FIGURE 5.1-1
NORTHERN CALIFORNIA ELECTRIC GRID
COSUMNES POWER PLANT
APPLICATION FOR CERTIFICATION

D062001002RDD_05(8/21/01)

CH2MHILL

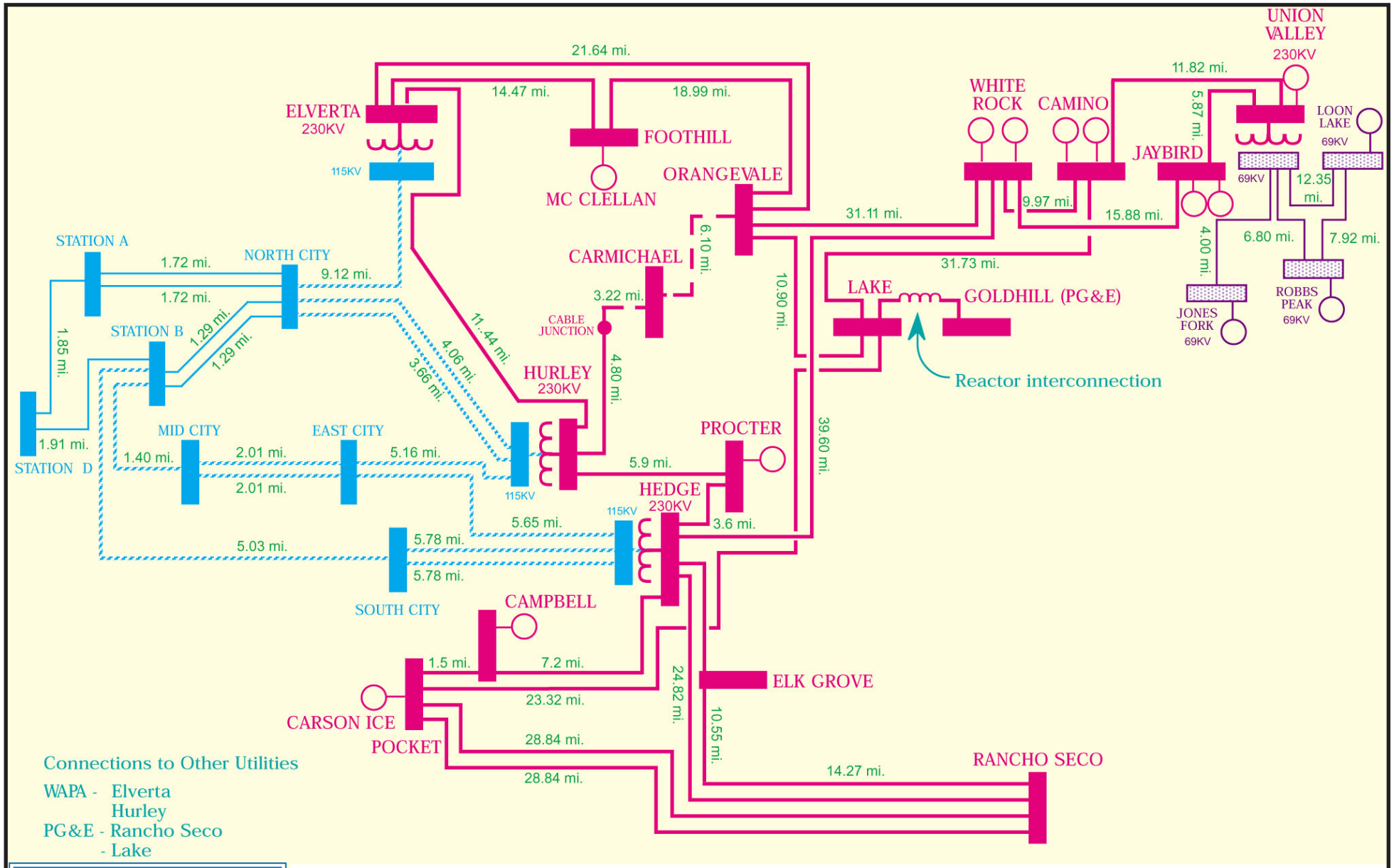

D062001002RDD_04(8/21/01)

FIGURE 5.1-2
SMUD TRANSMISSION SYSTEM (230KV/115KV AND UARP) 2000 SYSTEM
COSUMNES POWER PLANT
APPLICATION FOR CERTIFICATION

CH2MHILL

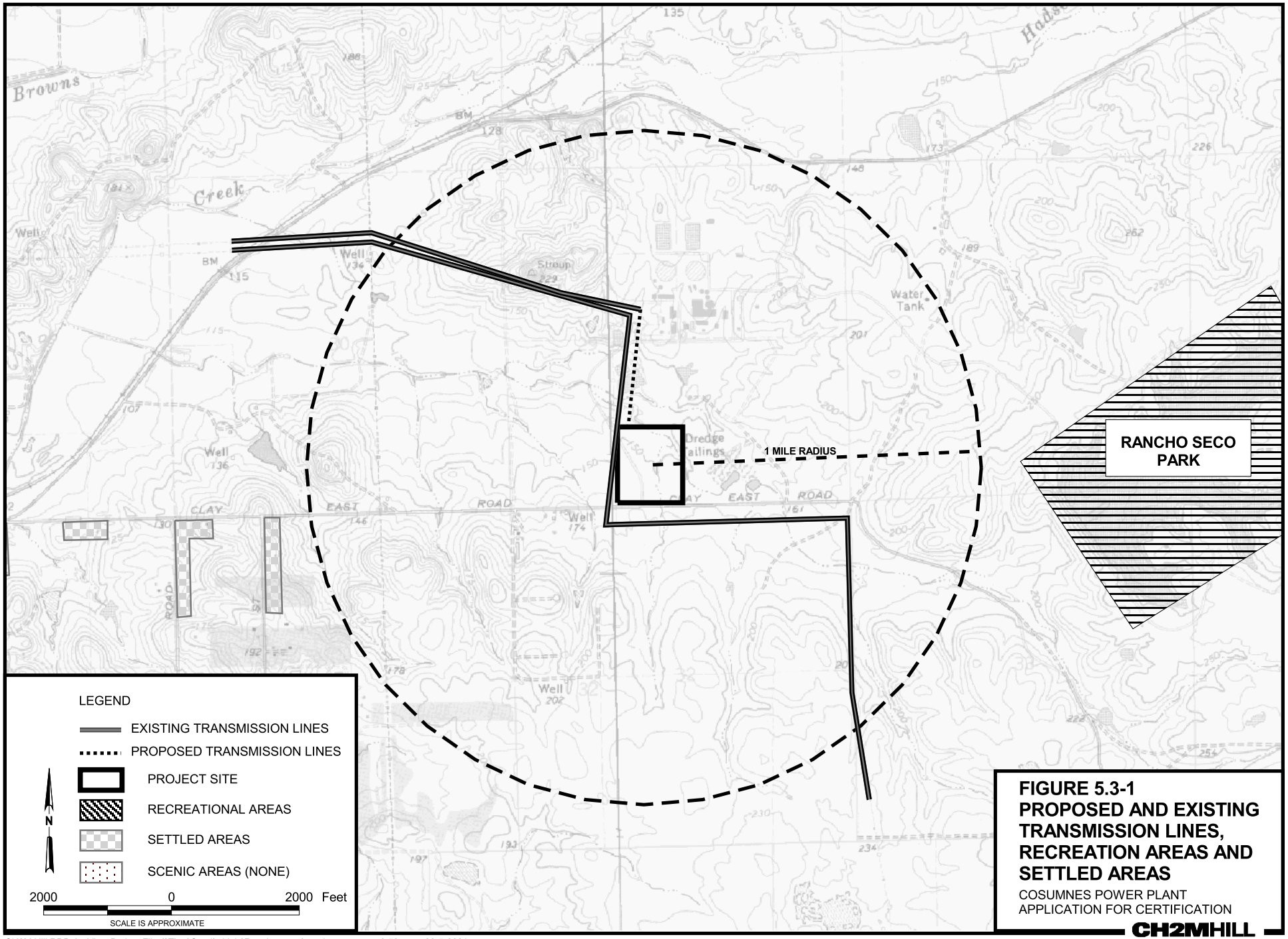

FIGURE 5.3-1
PROPOSED AND EXISTING TRANSMISSION LINES, RECREATION AREAS AND SETTLED AREAS

COSUMNES POWER PLANT
APPLICATION FOR CERTIFICATION

CH2MHILL

CH2M Hill RDD ArcView Project File \\Thor\Cart1\rddgis\Rancho_seco\rancho_seco.apr 3:58 p.m. 09-5-2001

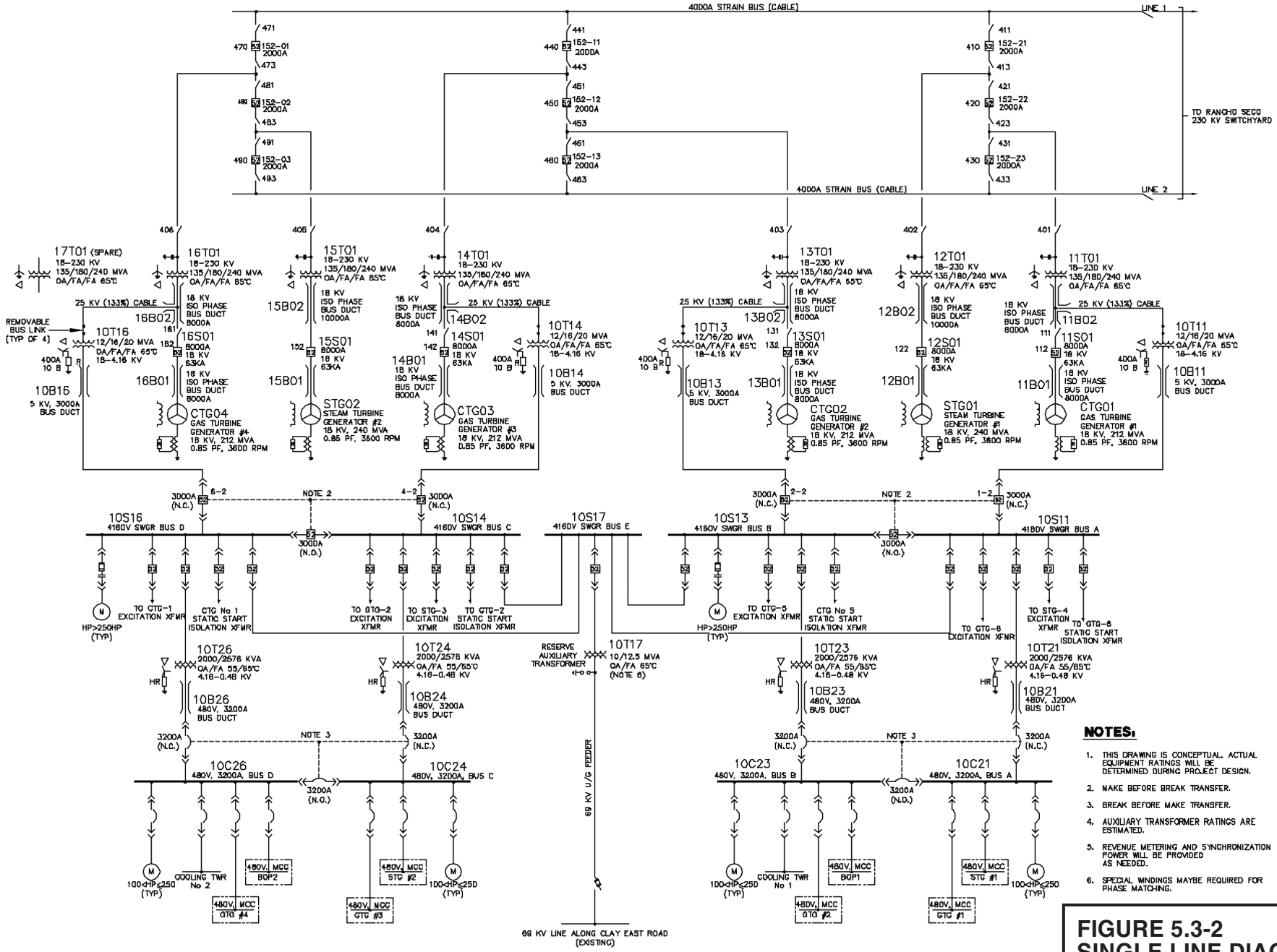

NOTES:

1. THIS DRAWING IS CONCEPTUAL. ACTUAL EQUIPMENT RATINGS WILL BE DETERMINED DURING PROJECT DESIGN.
2. MAKE BEFORE BREAK TRANSFER.
3. BREAK BEFORE MAKE TRANSFER.
4. AUXILIARY TRANSFORMER RATINGS ARE ESTIMATED.
5. REVENUE METERING AND SYNCHRONIZATION POWER WILL BE PROVIDED AS NEEDED.
6. SPECIAL WINDINGS MAYBE REQUIRED FOR PHASE MATCHING.

SOURCE: PB POWER, INC.

D062001002RDD_13 (9/6/01)

FIGURE 5.3-2
SINGLE LINE DIAGRAM
COSUMNES POWER PLANT
APPLICATION FOR CERTIFICATION

CH2MHILL

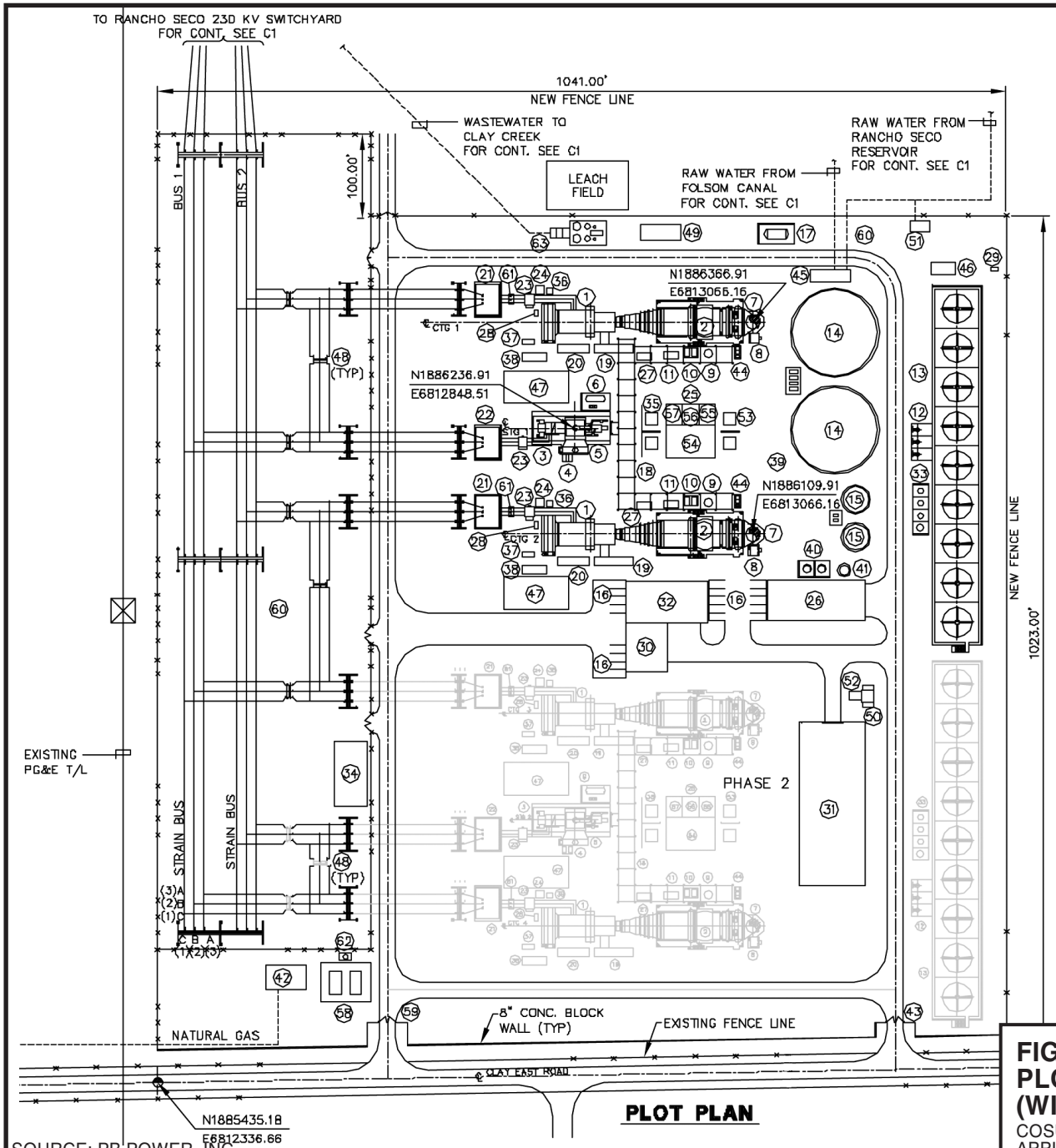

PLOT PLAN

SOURCE: PB POWER, INC.
D062001002RDD_19 (9/6/01)

LEGEND:

(34) SWITCHYARD CONTROL BUILDING
(35) 4160V AUXILIARY TRANSFORMERS
(36) DC LINK REACTOR
(37) CO_2 FIRE PROTECTION SKID
(38) GENERATOR AUXILIARY & STATIC START
(39) ASPHALTIC SURFACING
(40) ACID AND CAUSTIC TANK
(41) NEUTRALIZATION TANK
(42) NATURAL GAS METERING STATION
(43) MAIN GATE
(44) HRSG CHEMICAL FEED SYSTEM
(45) RAW WATER TREATMENT
(46) WASTE WATER SUMP
(47) MAINTENANCE CRANE PARKING
(48) 230 KV CIRCUIT BREAKER
(49) SANITARY WASTEWATER TREATMENT BUILDING
(50) B9–4.16 KV RESERVE AUXILIARY TRANSFORMER
(51) FIREWATER PUMP
(52) 4160 V SWITCHGEAR BUS E
(53) 480V AUXILIARY TRANSFORMERS
(54) SWITCHGEAR ROOM
(55) BATTERY ROOM
(56) DCS ROOM
(57) STEAM/WATER SAMPLE LAB
(58) GAS COMPRESSOR BUILDING
(59) SIDE GATE
(60) CRUSHED ROCK
(61) AUXILIARY TRANSFORMER CABLE TERMINAL BOX
(62) NATURAL GAS COMPRESSOR RECYCLE COOLER
(63) WASTEWATER CLARIFIER SYSTEM

(1) COMBUSTION TURBINE GENERATOR
(2) HEAT RECOVERY STEAM GENERATOR (HRSG)
(3) STEAM TURBINE GENERATOR
(4) CONDENSATE PUMPS
(5) DEAERATING SURFACE CONDENSER
(6) STG LUBE OIL MODULE
(7) HRSG STACK
(8) CEMS ENCLOSURE
(9) BLOWDOWN TANK
(10) HRSG BOILER FEED PUMPS
(11) AMMONIA INJECTION SKID
(12) CIRCULATING WATER PUMPS
(13) COOLING TOWER
(14) RAW WATER STORAGE TANK AND PUMPS (INCLUDES FIREWATER)
(15) D.I. WATER STORAGE TANK AND PUMPS
(16) PARKING AREA
(17) AMMONIA STORAGE TANK
(18) PIPE RACK
(19) ACCESSORY MODULE (LUBE OIL, HYDRAULIC, LIQUID FUEL)
(20) ELECTRICAL CONTROL PANEL
(21) CTG STEP–UP TRANSFORMER
(22) STG STEP–UP TRANSFORMER
(23) GENERATOR BREAKER
(24) ISOLATION & EXCITATION TRANSFORMER
(25) ELECTRICAL BUILDING
(26) D.I. WATER TREATMENT BUILDING
(27) WATER WASH SKID
(28) AIR PROCESS SKID
(29) OIL/WATER SEPARATOR
(30) CONTROL ROOM
(31) MAINTENANCE BUILDING AND WAREHOUSE
(32) CONFERENCE ROOM AND OFFICES
(33) COOLING TOWER CHEMICAL FEED SYSTEM

N

GRAPHIC SCALE
0' 50' 100' 150'

FIGURE 5.3-3
PLOT PLAN
(WITH GE 7FA AND NORTH UNIT AS PHASE 1)

COSUMNES POWER PLANT
APPLICATION FOR CERTIFICATION

CH2MHILL

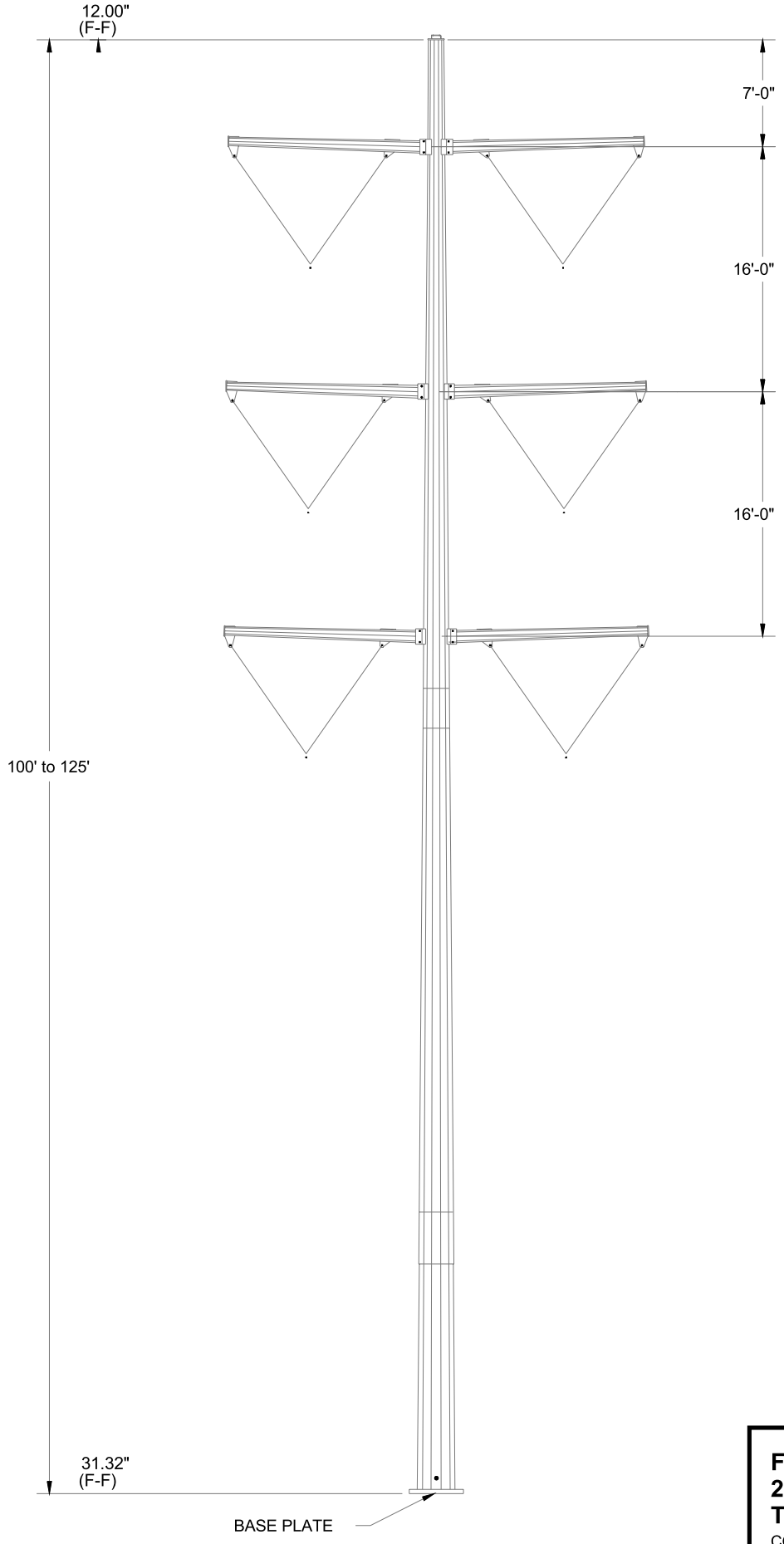

FIGURE 5.3-4a
230kV DOUBLE CIRCUIT TANGENT POLE

COSUMNES POWER PLANT
APPLICATION FOR CERTIFICATION

CH2MHILL

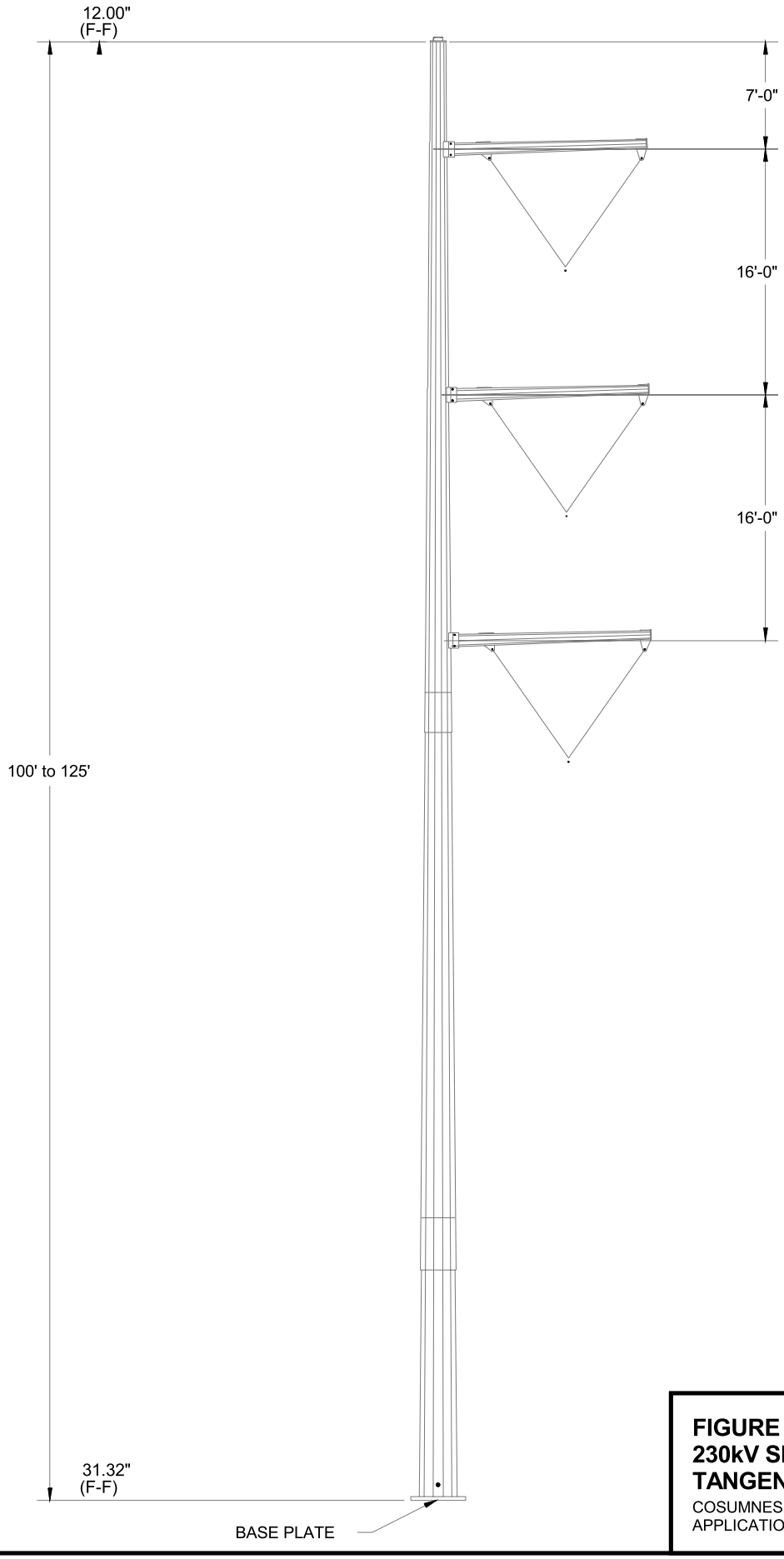

FIGURE 5.3-4b
230kV SINGLE CIRCUIT TANGENT POLE

COSUMNES POWER PLANT
APPLICATION FOR CERTIFICATION

CH2MHILL

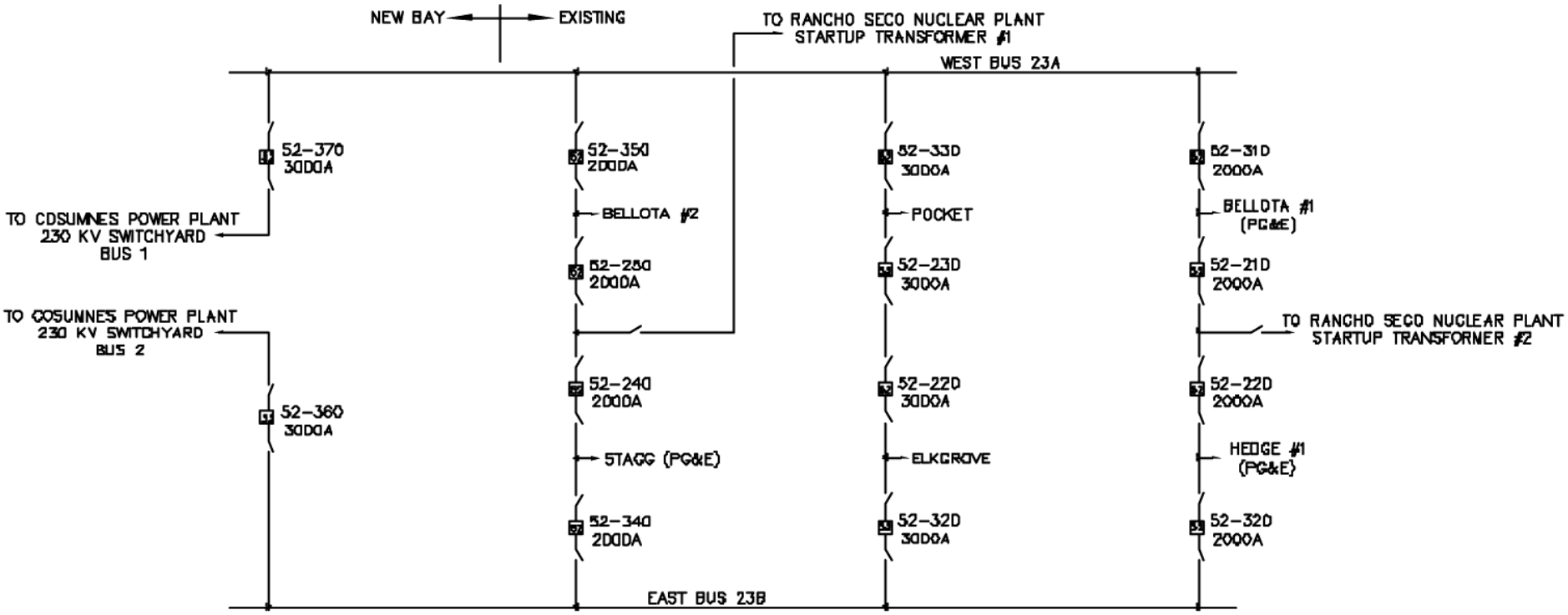

SOURCE: PB POWER, INC.

D062001002RDD_08 (9/6/01)

FIGURE 5.3-5
ONE LINE DIAGRAM
RANCHO SECO SWITCHYARD
COSUMNES POWER PLANT
APPLICATION FOR CERTIFICATION

CH2MHILL

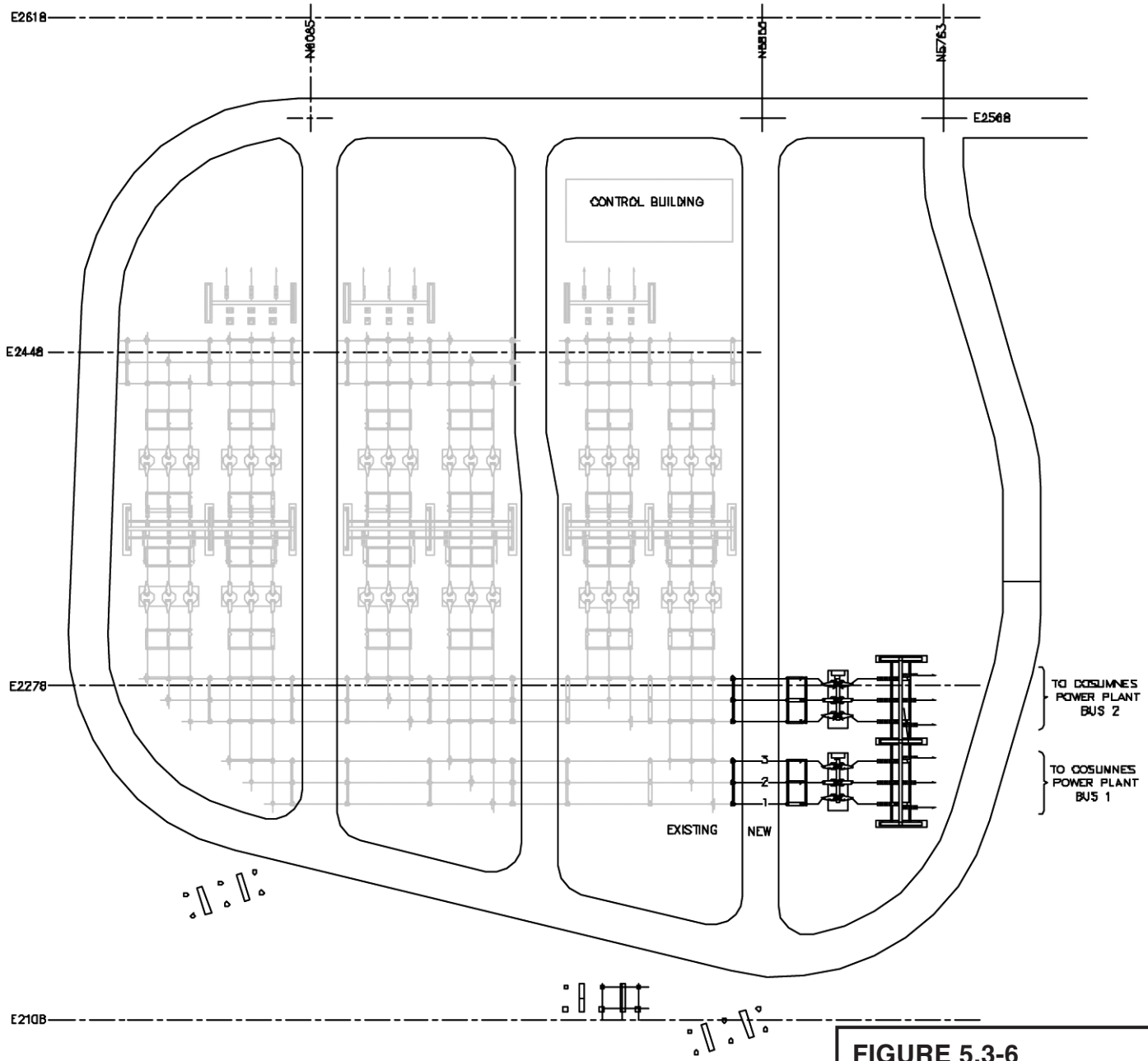

SOURCE: PB POWER, INC.

N

GRAPHIC SCALE

0' 10' 20' 40' 60'

D062001002RDD_12 (9/6/01)

FIGURE 5.3-6
RANCHO SECO 230kV SWITCHYARD

COSUMNES POWER PLANT
APPLICATION FOR CERTIFICATION

CH2MHILL