8.14 Water Resources

8.14.1 Introduction

This section evaluates the effects of the CPP project on water resources. Section 8.14.2 discusses the laws, ordinances, and regulations pertaining to water resources and project conformity. Section 8.14.3 describes the hydrologic setting, and Section 8.14.4 discusses proposed water use and disposal, precipitation, storm runoff, and drainage. Section 8.14.5 discusses the project's effects on water resources. Mitigation is discussed in Section 8.14.6. Section 8.14.7 provides the proposed monitoring plans and compliance verification procedures. Section 8.14.8 discusses cumulative impacts. Section 8.14.9 lists the permits required, and Section 8.14.10 provides agency contacts. Section 8.14.11 provides the references consulted in preparing this section.

Water resources potentially affected by the proposed CPP project include effects on water supply, surface and groundwater water quality, and stormwater and flood hazards. The following water resources impacts were investigated:

- Effects on surface waters
- Effects on groundwater recharge, degradation, or depletion
- Stormwater impacts
- Flooding impacts

8.14.2 Applicable Laws, Ordinances, Regulations, and Standards

Federal, state, county, and local LORS applicable to water resources and conformance are discussed in this section and summarized in Table 8.14-1.

8.14.2.1 Federal

CWA authorizes USEPA to regulate discharges of wastewater and stormwater into surface waters by issuing NPDES permits setting pretreatment standards. RWQCBs implement these permits at the state level, but USEPA may retain jurisdiction at its discretion. The CWA's primary effect on the CPP is with regard to the control of soil erosion during construction and the need to prepare and execute site-specific erosion control plans and measures for the construction of each project element that will entail the physical disruption or displacement of surface soil. In addition, Section 404 of the CWA regulates wetland disturbance and provides guidance on crossing waterways. The U.S. Army Corps of Engineers administers Section 404 permits for fill.

8.14.2.2 State

State LORS applicable to this project include CEQA, Central Valley Regional Water Quality Control Board (CVRWQCB) administration of stormwater permits, and CDFG administration of the streambed alteration-permitting program.

TABLE 8.14-1
Laws, Ordinances, Regulations, and Standards Applicable to CPP Water Resources

LORS	Applicability	How Conformance is Achieved	Agency/Contact
Federal			
CWA as implemented by the CVRWQCB	Regulates stormwater discharge by issuing Construction Activity NPDES Stormwater Permit	Section 8.14.5.1: NPDES permits for construction stormwater. Required prior to construction and plant operation.	CVRWQCB Leo Sarmiento (916) 255-3049
	General Industrial Stormwater Permit	Section 8.14.5.1: NPDES permits for industrial stormwater. Required prior to construction and plant operation.	CVRWQCB Sue O'Connell (916) 255-3000
	Surface Water Discharge Permit	Section 8.14.5.1: NPDES permits for discharge to surface water Required prior to construction and plant operation.	CVRWQCB Patricia O'Leary (916) 255-3000
CWA Section 401	Water Quality Certification	Section 8.14.5.1: Requires water quality certification for any Section 404 permit; delegated to CVRWQCB.	CVRWQCB Patricia O'Leary (916) 255-3000
CWA Section 404	Wetlands disturbance	Section 8.14.5.1: Section 404 permit for work in jurisdictional wetlands. Required prior to any work below the high water mark of the creek.	USACOE Nancy Haley U.S. Army Corps of Engineers (916) 557-7772
State			
State Water Resources Control Board	Regulates stormwater discharge	Section 8.14.5.1: NPDES permits for construction and industrial stormwater. Required prior to construction and plant operation.	CVRWQCB Leo Sarmiento (916) 255-3049
California Water Code 13550 *et seq*. And Resolution 75-58	Encourages reuse of water for beneficial use	Section 7.0: AFC demonstrates that ocean, brine, wastewaters, and other sources are not feasible for current project.	Paul Lillebo Environmental Specialist IV (916)341-5551
CDFG (Fish and Game Code, Section 1601)	Streambed alteration agreement	Section 8.14.5.1: 401 permit for work affecting surface water. Required prior to any work below the high water mark of the creek.	Dale Whitmore Gary Hobgood CDFG Streambed Alteration Agreements (916) 983-5162
Local			
Sacramento County Grading Ordinance	Permits Grading, Erosion and Sediment Control Sacramento County Ordinance 16.44 (Part of General Improvement Plan)	Section 8.14.5.1: Requires erosion and sediment control plan, drainage control features and county approval. Required prior to site grading. Application also comprises CEQA, Geotechnical Report, and Erosion and Sediment Control Plan.	Tony Do Sacramento County Land Division and Site Improvement Review (LD&SIR) (916) 874-5809

California Environmental Quality Act

CEQA requires that projects approved by state agencies be evaluated for their potential to cause adverse environmental impacts, and that impacts be mitigated to the extent feasible and applicable. The CEC meets the requirements of CEQA through the CEQA-equivalent AFC process.

State Water Resources Control Board and Central Valley Regional Water Quality Control Board

The CVRWQCB requires a notice of intent to be filed prior to construction activities. SWPPPs must be prepared prior to filing both the Construction and General Industrial Stormwater NPDES permits. The State Water Resources Control Board (SWRCB) Water Quality Order No. 99-08-DWQ applies to construction activity NPDES stormwater permits for construction areas of greater than 5 acres. SWRCB Order 97-03-DWQ authorizes general industrial stormwater permits.

California Water Code Section 13550, 13551, 461, and SWRCB Resolution No. 75-58

These water code sections and policy statements encourage the conservation of water resources and the maximum reuse of wastewater, particularly in areas where water is in short supply.

Fish and Game Code Section 1601 Streambed Alteration Agreement

The CDFG requires a Streambed Alteration Agreement for actions that would disturb bed and banks of surface streams. Because of the chance of a "frac out," this includes streams that are avoided by trenchless construction such as HDD. A "frac out" is the term for pressurized drilling muds bursting to the surface through surface fractures, with potential adverse impacts to surface resources.

Water Quality Certification

Section 404 permits issued by the U.S. Army Corps of Engineers for wetland fill, require a Water Quality Certification (Section 401) permit issued by CVRWQCB.

8.14.2.3 Local Policies

Local ordinances focus on flood control concerns, stormwater protection, and erosion control as well as use of reclaimed water for cooling. The Sacramento County General Plan specifies policies listed in Table 8.14-2. The project conformance with these policies is also provided.

8.14.3 Hydrologic Setting

The climate in the project area is typical of the Central Sacramento Valley with hot, dry summers and mild winters. Daytime temperatures during the summer months range between 80°F and 100°F, with peak days reaching temperatures as high as 110°F. The rainy season generally extends from November through March. Occasional rains occur during the spring and fall months, but summer months are dry. Average annual precipitation is about 12 inches. Total elevation range on the site is from 140 to 160 feet.

The project site is located in the southeast portion of Sacramento County. Surrounding land is predominantly grazing land, vineyards, and scattered rural houses. The foothills of the Sierra Nevada lie approximately 15 miles to the east.

TABLE 8.14-2
General Plan Policies Applicable to Water Resources and Conformance of CPP Project

Element	Goal/Policy	Conformance
Sacramento County General Plan		
Conservation – Water Resources	CO-7: Divert surface water only when flows are sufficient to maintain minimum flows consistent with the EBMUD Court ruling of: - 2,000 cfs October 16 through February - 3,000 cfs March through June - 1,750 cfs July through October 15 in the Lower American River between Nimbus Dam and its confluence with the Sacramento River.	USBR contract provides diversions consistent with agreements of EBMUD water use.
	CO-18: Work with area purveyors to investigate and implement a conjunctive use program between groundwater and surface water supplies, consistent with meeting the in-stream flow requirements of the American River.	Project would not use groundwater and, therefore, would not contribute to overdraft.
	CO-30: Locate septic systems outside of primary ground water recharge areas, or if that is not possible, require the use of shallow leaching systems for disposal of septic effluent.	Project would dispose to shallow leachfield or package treatment system consistent with protection of groundwater resources.
Water Conservation	CO-39: Development project approvals shall include a finding that all feasible and cost effective options for conservation and water reuse are incorporated into project design. Wastewater reuse options shall be reviewed and agreed upon by the area water purveyor when the reclaimed water is to be used within the water purveyor's business.	Water would be recycled to the extent feasible, consistent with maintaining discharge water quality, such that downstream beneficial uses are not adversely affected.

Source: Sacramento County General Plan (1997).
EBMUD East Bay Municipal Utilities District

The Folsom-South Canal and Rancho Seco Reservoir are the major surface water features in the vicinity. Water from the canal is used to maintain levels in the Reservoir and its surrounding environmental habitat, and is cycled through the Rancho Seco nuclear facility and discharged to Clay Creek. A more detailed description is provided below.

8.14.3.1 Surface Water

Surface waters in the project area include Folsom-South Canal, Rancho Seco Reservoir, Clay Creek, Hadselville Creek, and various unnamed tributaries to these waters. Local surface water features are shown in Figure 8.14-1.

Folsom-South Canal

Folsom-South Canal is a 26.98-mile conveyance facility, owned and operated by the U.S. Bureau of Reclamation as part of its Central Valley Project. It originates at Lake Natoma on the American River in eastern Sacramento, and carries water south to the Rancho Seco Plant. When the Folsom-South Canal was constructed, the Reclamation's original plan was to extend the canal farther south to a final length of 55.8 miles. However, this additional construction was never completed, so the canal terminates at Rancho Seco Plant, and SMUD is the primary user of this facility. Presently, the canal is generally straight, trapezoidal, concrete-lined, and fenced on both sides. Water quality in the canal reflects water quality of the American River and is described in detail in Chapter 7.0.

Rancho Seco Reservoir

Rancho Seco Reservoir is located 0.25 mile east of the project site. It is a small reservoir constructed on an unnamed tributary to Clay Creek that dominates the 433-acre recreational facility called Rancho Seco Park. The source water for Rancho Seco Reservoir initiates from a small upstream drainage area, but principally from water diversions from the Folsom-South Canal. Water is regularly discharged from the Rancho Seco Reservoir dam spillway to maintain riparian vegetation downstream of the dam. Rancho Seco Reservoir was originally developed to provide an emergency backup water supply for cooling the Rancho Seco Plant and to provide water for fire control if necessary. As part of the agreement to construct and operate Rancho Seco Plant, SMUD agreed to operate Rancho Seco Reservoir as a public park for 50 years. The park is open to the public year round for swimming, fishing, and camping. Electric motorboats, rowboats, and sailboats are allowed on the lake. The lake is planted with bass, bluegill, catfish, and trout and is a popular fishing destination.

Clay Creek, Hadselville Creek, Laguna Creek, Cosumnes River

Clay Creek flows from east to west, approximately 0.1 mile north of the project site. The Creek has several branches in the project vicinity; it was diverted and changed as a result of construction of the mining operation east of the site, Rancho Seco Reservoir east of the site, and the Rancho Seco Plant north of the site. It appears that the drainage that crosses the northeast corner of the site is one of four primary drainages that meet their confluence in Clay Creek 0.1 mile north of the site. The four drainages, from north to south originate from: A) the southeast corner of the Rancho Seco Plant; B) the main surface drainage that was dammed to form Rancho Seco Reservoir; C) the underground pipeline from Rancho Seco Reservoir to the Rancho Seco Plant and Clay Creek; and D) a side channel from the mine tailings that branches off the main surface drainage from Rancho Seco Reservoir.

Flows in these drainages are seasonal, probably consisting only of winter rainfall. The drainages were dry in April and May of 2001 during field surveys. Perennial flow in Clay Creek originates west of the project site where wastewater from the Ranch Seco Plant discharges into Clay Creek at a rate of 13 mgd. The discharge contains stormwater, irrigation runoff, processed radioactive water, treated domestic wastewater from the power plant site, heating tower blowdown, and dilution water from the Folsom-South Canal.

Clay Creek flows into Hadselville Creek approximately two miles west of the project. Hadselville Creek in turn flows into Laguna Creek approximately 2 miles further downstream. Laguna Creek flows southwesterly for approximately 9 miles until it reaches the confluence of the Cosumnes River. The Cosumnes River is the last large un-dammed river in the Central Valley, flowing at around 2,000 cubic feet per second (cfs) most of the year but up to 35,000 cfs during storm events. The channel is natural, meandering, and bordered by extensive riparian vegetation on both sides. Three miles downstream of the confluence of Hadselville and Laguna Creeks is the eastern boundary of the Cosumnes River Preserve. The Cosumnes River flows into the Mokelumne, which joins the Sacramento-San Joaquin Delta near Antioch. In this way, Clay Creek is a contributor to the beneficial uses of the Delta.

The beneficial uses of Clay Creek, Hadselville Creek, Laguna Creek, Cosumnes River, and the Sacramento-San Joaquin Delta are municipal, industrial, and agricultural supply; recreation; aesthetic enjoyment; groundwater recharge; freshwater replenishment; and preservation and enhancement of fish, wildlife, and other aquatic resources (RWQCB, 1997).

The California Department of Fish and Game (CDFG) has verified that the fish species present in the Cosumnes River are consistent with both cold and warm water fisheries, and that there is a potential for anadromous fish migration implying beneficial uses for both cold and warm water habitat.

In areas where groundwater elevations are below the stream bottom, water from the stream will percolate to groundwater. Since Clay Creek, Hadselville Creek, and Laguna Creek may be dry at times, it is reasonable to assume that the stream water is lost by evaporation, flow downstream, and percolation to groundwater, providing a source of municipal and irrigation water supply.

8.14.3.2 Groundwater

Groundwater at the site was described in the Draft EIR for Rancho Seco Park Master Plan (SMUD, 1994) as follows:

The site is found in the Pliocene Laguna Formation and is underlain by 1,500 to 2,000 feet of Tertiary or older sediments, which were deposited on a basement complex of granitic to metamorphic rocks. Groundwater in the area is present under free or semiconfined conditions as a part of the Sacramento Valley groundwater basin. Water is stored primarily in the Mehrten Formation. The sand and gravel zones of this formation are heavily used in Sacramento County. As of 1994, overdraft was increasing at an average 0.5 foot per year. Overdraft was most severe around Galt and Elk Grove. As of 1991, groundwater under the site had been dropping approximately 2 feet per year since 1976, with potable water present at depths of 230 to 350 feet. (SMUD, 1991 *in* SMUD, 1994). Recent agreements by the

Sacramento Water Agency implemented through the water forum are addressing the overdraft by shifting County water use to surface water sources.

Sustained yield is defined by the amount of groundwater that can be withdrawn without lowering groundwater levels. Sustained yield for the Folsom-South service area, including Galt Irrigation District, Omochumne, and other south service subareas is 215,000 acre-feet per year (AFY) (Sacramento County, 1992 *in* SMUD, 1994).

Few portions of Sacramento County have high infiltration capacity. These include recharge areas generally existing along active large stream channels with sands and gravels. Some areas along Clay Creek have moderate recharge capability, but most of the area is characterized as having poor recharge capability because of clay or hardpan soils. (Sacramento County, 1992 *in* SMUD, 1994).

Rancho Seco Park gets domestic water from an onsite well. The well supplies a demand of approximately 600 gpd (Psomas and Associates, 1993 *in* SMUD, 1994).

Groundwater quality at the site is generally good and within federal and state limits for drinking water. Water is sodium bicarbonate type with low total dissolved solids (<200 mg/L), hardness less than 50 mg/L and iron and manganese less than 0.3 mg/L (SMUD file data *in* SMUD, 1994). There are no reports of contamination or other water quality problems at the site. Groundwater contamination is unlikely because lack of urbanization east of the site (upgradient) and poor soil permeability effectively prevent substantial migration of contaminants. Beneficial uses of groundwater underlying the project site are municipal, industrial, and agricultural supply.

Septic disposal systems and leach fields are potential sources of nitrates into groundwater; therefore, these are approved based on local soil conditions and the potential for contamination. Sacramento County has a policy of replacing septic systems on parcels of less than 5 acres that are found to cause increasing nitrate levels. The only septic treatment systems in the vicinity of the project are the Rancho Seco waste water ponds, located near the east end of Rancho Seco Reservoir, and the Rancho Seco Plant wastewater system, which is an overland flow system, located 0.25 mile downstream of the project.

8.14.3.3 Flooding Potential

FEMA Flood Insurance Rate Maps (FIRM) show that the northern boundary of Rancho Seco Park CPP is inside the 100-year flood boundary that borders Hadselville Creek (FEMA 1980). The CPP project site is outside the 100-year flood boundary (Figure 8.14-2). The proposed gas line for the project crosses through the 100-year floodplain in many locations. There are no tsunami run-up or seiche zones in the project area.

8.14.4 Water Use and Disposal

The water used and disposed of is diagramed in Figures 8.14-3a, b, c, and d.

The CPP project would use approximately 8,000 AFY of water provided from the Folsom-South Canal, which conveys water from the American River, at Lake Natoma. The water supply is discussed in detail in Section 7.0. The source of water supply, rationale for its selection, water quality, and water balance diagrams are detailed in Section 7.0. Wastewater disposal is described in detail here.

Wastewater from the facility falls within three general categories: 1) The greatest volume is cooling water, comprising cooling tower blowdown and process water that will be disposed of in Clay Creek as authorized by NPDES permit. 2) A relatively small amount of sanitary wastewater (< 1 AFY) comprising wastewater from toilets, showers, and washdown water will be discharged to an on-site packaged waste treatment system and leach field. 3) Stormwater from the site will be conveyed by sheet flow to area drains leading to a detention pond located north of the project and south of Clay Creek. The following sections provide additional details.

8.14.4.1 Cooling Tower Blowdown

The circulating water system blowdown, including water from the Folsom-South Canal, various process waste streams, and residues of antiscalants and anti-biofouling chemicals will be discharged through a 14-inch pipe to Clay Creek, approximately 100 feet north of the project site. Water will be adjusted to a pH ±Δ 0.5 of the makeup pH with sulfuric acid (if required), de-chlorinated, and checked for temperature, TDS, and chlorine prior to discharge into Clay Creek, according to the requirements of an NPDES permit. Table 8.14-3 presents the estimated quality of water that would be discharged. The estimated water quality meets all anticipated numbered criteria with the exception of copper. Supply water contains an estimated 19 mg/L of copper, which after treatment effluent would contain 10 mg/L, a net benefit to beneficial uses of the waterway. An application for the NPDES discharge is included in Appendix 8.14A of this AFC. The estimated quality of cooling tower drift can be found in Table 8.14-4.

TABLE 8.14-3
Estimated Quality of Wastewater Discharged to Clay Creek Under NPDES Permit

Constituent/Parameter	Estimated Water Quality	Estimated Numerical Criteria for Effluent[a]
Flow (gpm)	367	-
Cations (mg/L)		-
Calcium	75	-
Magnesium	18	-
Sodium	28	-
Potassium	13	-
Ammonium	1	-
Total Cations	135	-
Anions (mg/L)		-
Bicarbonate	328	-
Carbonate	13	-
Hydroxide	NA	-
Sulfate	18	-
Chloride	17	-
Nitrate	ND	-
Bromide	ND	-

TABLE 8.14-3
Estimated Quality of Wastewater Discharged to Clay Creek Under NPDES Permit

Constituent/Parameter	Estimated Water Quality	Estimated Numerical Criteria for Effluent[a]
Phosphorous	ND	-
Phosphate	ND	-
BTEX (μg/L)		-
Benzene	ND	-
Toluene	ND	-
Ethylbenzene	ND	-
Xylenes (total)	ND	-
Other (mg/L)		-
Oil and Grease	ND	10 mg/l
Chlorine Residual	0.01	0.002 mg/l
Total Hardness	250	-
Total Alkalinity	351	-
TSS	<20	20
Silica	120	-
Radionuclides	NA	15 pCI/L
Temperature	<Δ 5°F	<Δ 5°F
Biochemical Oxygen Demand	ND	-
Chemical Oxygen Demand	ND	-
Dissolved Oxygen	9 mg/L	>7 mg/L
Turbidity	<Δ 1 NTU	<Δ 1 NTU
pH	7.5	6.5-8.5
TDS	470	500
Metals (μg/L)		-
Aluminum	120	-
Antimony	ND	-
Arsenic	5.0	5 μg/L
Barium	160	1,000 μg/L
Beryllium	5.0	5.3 μg/L
Boron	230	600 μg/L
Cadmium	1	1.5 μg/L
Chromium, Hexavalent	10	11 μg/L
Cobalt	ND	-
Copper	10	20 μg/L
Fluoride	10	420 μg/L
Iron	990	1,000 μg/L

TABLE 8.14-3
Estimated Quality of Wastewater Discharged to Clay Creek Under NPDES Permit

Constituent/Parameter	Estimated Water Quality	Estimated Numerical Criteria for Effluent[a]
Lead	25	25 μg/L
Manganese	100	100 μg/L
Mercury	0.5	0.7 μg/L
Molybdenum	5	10 μg/L
Nickel	10	250 μg/L
Silicon	57,000	-
Silver	1	1 μg/L
Selenium	5	5.0 μg/L
Strontium	660	-
Thallium	5	0.6 μg/L
Vanadium	5	-
Zinc	60	60 μg/L

[a] No numerical criterion
[b] Estimated effluent limits are based on recent NPDES permits issued by the RWQCB, guidelines from the Inland Surface Waters Plan (RWQCB, 2000), and USEPA Integrated Risk Information System (USEPA, 2000).
NA Not analyzed
ND Not detected
mg/L milligrams per liter
μg/L micrograms per liter

TABLE 8.14-4
Estimated Quality of Cooling Tower Drift

Constituent/Parameter	Cooling Tower Drift
Flow (gpm)	1.4
Cations (mg/L)	
Calcium	75
Magnesium	18
Sodium	28
Potassium	13
Ammonium	1
Anions (mg/L)	
Bicarbonate	328
Carbonate	13
Hydroxide	0
Sulfate	18
Chloride	17

TABLE 8.14-4
Estimated Quality of Cooling Tower Drift

Constituent/Parameter	Cooling Tower Drift
Nitrate	0
Phosphate	0
Other (mg/L)	
Total Hardness	250
Total Alkalinity (as $CaCO_3$)	280
TSS	NA
Silica	120
Carbon Dioxide	9.5
PH	8.7
TDS	470
Metals/Misc. (μg/L)	
Fluoride	10
Arsenic	5.0
Barium	160
Beryllium	5.0
Boron	230
Cadmium	1.0
Chromium	23
Copper	190
Iron	990
Lead	28
Manganese	22
Mercury	0.5
Nickel	10
Silver	1.0
Selenium	5.0
Thallium	5.0
Zinc	43

8.14.4.2 Domestic Wastewater

Domestic wastewater, which comprises discharges from sinks, toilets, showers, and area washdown would be disposed to a packaged waste water system and leachfield located on vacant grazing land north of the proposed project. The septic system would be designed, sized, and permitted consistent with the number of employees expected at the site during operations. The design would be subject to County review, and would adhere to the

requirements of the Sacramento Planning Department to ensure compliance with local and agencies regulations and avoid potential contamination.

8.14.4.3 Stormwater, Precipitation, and Drainage

Most of the precipitation in the project area falls between November and April. Monthly average rainfall near the project site is presented in Table 8.14-5. The annual average rainfall at Clay Station near the project is 16.7 inches.

TABLE 8.14-5
Average Monthly Rainfall Near the Proposed Project Site (Clay Ranch DWR # B00 1785)

Precipitation	Oct	Nov	Dec	Jan	Feb	Mar	Apr	May	Jun	Jul	Aug	Sep
Rainfall (in.)	0.89	2.03	2.85	3.40	2.97	2.50	1.59	0.48	0.18	0.05	0.05	0.21

Stormwater Runoff Prior to Construction

Currently, stormwater from the project site percolates into the soil. Excess runoff sheet flows to the north and east, where it is captured by Clay Creek and discharges into Hadselville Creek approximately 2 miles west of the project site, eventually draining into the Sacramento-San Joaquin Delta (see Subsection 8.14.3). Table 8.14-6 shows the rainfall depth expected at various return frequencies and the corresponding total runoff expected at the site. The site is currently used as grazing land, with soil types that have poor drainage.

The total runoff values indicated in Table 8.14-6 are based on the runoff from a site area of 25 acres**.** This allows a direct comparison to the portion of the final developed site area that will have surface runoff directed to the proposed stormwater detention pond.

TABLE 8.14-6
Stormwater Runoff Prior to Construction

Return Period of Storm (years)	Rainfall Depth for 24-hr Storm[a] (inches)	Total Runoff from Site for 24-hr Storm[b] (millions of gallons)
10	2.60	0.53
25	3.05	0.62
50	3.37	0.68
100	3.68	0.74

[a] From Rainfall Depth Duration Frequency for Eagles Nest, California Department of Water Resources, Sacramento County Station No. 269.
[b] Represents 25-acre area, which currently drains factored for surface condition.

Storm Runoff After Construction

Sacramento County requires permitting of any grading be pursuant to County Ordinance 16.44 *et seq*. The grading permit, including an erosion and sediment control plan, is prepared as part of the site improvement permit review submitted to the Planning Department prior to construction. After construction, the site will be designed to drain stormwater runoff to an on-site detention pond. From the detention pond, the stormwater will be discharged into

Clay Creek, which runs along the north side of the project site. The peak discharge from the detention pond will be regulated to less than the pre-construction flow rate for the 10-year storm. Figure 8.14-4 shows the post-construction runoff and drainage patterns. Table 8.14-7 indicates the total stormwater runoff after construction for the 25-acre portion of the developed site that will drain to the stormwater detention pond via a system of pipes, channels, and drains. The cooling tower, landscaping, and natural areas will cover the remaining portion of the 30-acre developed site. The post-construction stormwater runoff from these areas will be less than the pre-construction runoff as a result of the stormwater captured in the cooling tower.

TABLE 8.14-7
Stormwater Runoff Following Construction

Return Period of Storm (years)	Rainfall Depth for 24-hr Storm[a] (inches)	Total Runoff from Site for 24-hr Storm[b] (millions of gallons)
10	2.60	1.26
25	3.05	1.46
50	3.37	1.61
100	3.68	1.76

[a] From Rainfall Depth Duration Frequency for Eagles Nest, California Department of Water Resources, Sacramento County Station No. 269.
[b] Represents 25-acre area, which will drain to proposed stormwater detention basin, factored for surface condition.

8.14.5 Effects on Water Resources

The potential effects of the project on water resources were derived from the CEQA checklist and evaluated with respect to the following criteria.

A project is considered to have a potentially significant effect if it would:

- Substantially alter the existing drainage pattern of the site or area, including through the alteration of the course of a stream or river, in a manner which would result in substantial erosion or siltation on- or off-site.
- Substantially alter the existing drainage pattern of the site or area, including through the alteration of the course of a stream or river, or substantially increase the rate or amount of surface runoff in a manner that would result in flooding on- or off-site.
- Create or contribute runoff water which would exceed the capacity of existing or planned stormwater drainage systems or provide substantial additional sources of polluted runoff.
- Violate any water quality standards or waste discharge requirements.
- Otherwise substantially degrade water quality.
- Substantially deplete groundwater supplies or interfere substantially with groundwater recharge such that there would be a net deficit in aquifer volume or a lowering of the local groundwater table level (e.g., the production rate of pre-existing nearby wells

would drop to a level which would not support existing land uses or planned uses for which permits have been granted).

- Place housing within a 100-year flood hazard area as mapped on a federal Flood Hazard Boundary or Flood Insurance Rate Map or other flood hazard delineation map.
- Place structures which would impede or redirect flood flows within a 100-year flood hazard area.
- Expose people or structures to a significant risk of loss, injury, or death involving flooding, including flooding as a result of the failure of a levee or dam.
- Cause inundation by seiche, tsunami, or mudflow.

The following sections describe potential impacts of the project on water resources with specific respect to these evaluation criteria.

8.14.5.1 Surface Water

The project will cause the following potential impacts to surface water resources:

- Construction of the project would require diverting and relocating three tributaries to Clay Creek.
- Construction of the project will require grading and clearing of up to 50 acres, with potential increases in erosion and sediment runoff to surface water.
- Stormwater runoff from the project site will accumulate oil, grease, and chemical residues from the plant site and distribute them to Clay Creek, which would cause water quality degradation and reduce beneficial uses downstream.
- Discharge of sanitary wastewater consisting of effluent from toilets, showers, and washdown water will be discharged to an on-site packaged waste treatment and leachfield system, which could potentially cause adverse impacts to surface water quality.
- Cooling water blowdown and other wastestreams will be discharged to Clay Creek under an NPDES permit, potentially resulting in water quality degradation of Clay Creek, and reduced beneficial uses downstream.
- Construction of the proposed gas pipeline will cross rivers (Cosumnes River, Badger Creek, Laguna Creek, Clay Creek), irrigation ditches, canals, vernal pools, and ephemeral streams that may be adversely affected by sediment, erosion, and water quality degradation as a result of construction.
- Use of the construction laydown area will require temporary grading 20 acres south of Clay East Road, potentially exposing this area to additional erosion. No ephemeral drainages in this area would need to be filled or graded to allow temporary use of the laydown area.

Each of these potential effects is evaluated below to determine whether the potential effect is significant.

Diversion and Relocation of Three Tributaries to Clay Creek

The project site is presently crossed by three ephemeral drainages, all of which join Clay Creek within 0.25 mile of the site. These drainages have distinct hydrologic features and some vegetation that indicate they would be defined as jurisdictional wetlands according to ACOE criteria. The applicant proposes to divert these drainages around the proposed site to maintain local drainage, minimize erosion in the project area, and maintain the benefits of the drainages. The proposed routes of these three drainages that would meet these objectives are shown in Figure 8.14-4.

The drainages are generally between 6 and 15 feet wide, where erosion has downcut through the surface soil to a hardpan below. The vegetation in the drainages is distinct from the surrounding annual grasslands, but the channel in each case is relatively narrow. There are no riparian shrub or tree species supported by the drainages, possibly indicating a relatively low level of wetlands development. The upper portions of the easternmost drainages (A, B, C, D) have all been previously modified by construction of the Rancho Seco Plant, the photovoltaic plant, and the old mine tailings. Drainages E and F were culverted when Clay East Road was built. All these drainages appear to flow only during winter rains and are ephemeral. The drainages also have enough slope that water does not appear to pool or pond in a manner that would support aquatic biota.[1]

The Clean Water Act prohibits fill of wetlands, except as authorized under Section 404 permitting. A Section 404 permit requires detailed depictions of the extent of wetlands and the measures implemented to avoid adverse impacts from fill. The ACOE, which implements and enforces the Section 404 permit, then applies conditions and mitigations to avoid, minimize, or compensate for adverse impacts. These conditions include limiting the disturbance area, specifications for revegetation and restoration, and, as appropriate, monitoring and compliance (Federal Register, 2000).

One of the conditions of the 404 permit is to obtain a Water Quality Certification (Section 401 permit) issued by the RWQCB. The 401 permit requires conditions to protect and maintain water quality downstream of the fill.

As part of the Section 404 authorization, the ACOE will prepare an environmental assessment pursuant to NEPA and submit this document for review and concurrence by the USFWS. The USFWS will apply or add conditions that specify measures to avoid, minimize, or compensate for any potential adverse impacts to protected plant, fish, and wildlife species.

With implementation of the conditions and mitigations required of a Section 404 and 401 permit, impacts to these drainages from filling during construction will be reduced to less than significant.

Potential Erosion and Sediment Control from Grading up to 50 Acres

To construct the project, approximately 50 acres of land that is presently vegetated will be cleared of vegetation, graded, and leveled. Exposing 50 acres of soil to wind and rain may potentially cause erosion and sediment runoff, resulting in adverse impacts to surface waters downstream of the project and groundwater under the project site (Figure 8.14-5).

[1] Other drainages in the general area that would not be affected by project construction pool water for an extended period and would potentially support aquatic biota.

The project laydown areas located south of Clay East Road will require clearing and grading approximately 20 acres of annual grassland, including spanning or culverting two ephemeral streams. Exposing 20 acres of soil to wind and rain may potentially cause erosion and sediment runoff, resulting in adverse impacts to surface waters downstream of the project. The proposed grading plan, along with proposed erosion and sediment control features, are shown in Figure 8.14-4.

The County requires that projects requiring grading of an area larger than 5 acres obtain and comply with an Erosion and Sediment Control Plan that meets County, regional, and state standards. Three agencies coordinate efforts to implement the NPDES stormwater construction permit program. The applicant must prepare SWPPP for avoiding excessive erosion, capturing sediments before they migrate off-site, and protecting water quality downstream of the project. The SWPPP specifies Best Management Practices (BMPs) such as silt fences, detention basins, rock structures, revegetation, and erosion barriers to minimize the potential for off-site migration of sediments. The SWPPP also contains a section that describes equipment fueling and lubrication practices and defines parking areas and waste storage areas to control any spills from fuel, lubricants, or solvents. The SWPPP is required by the RWQCB, implementing regulations of the Clean Water Act. The County program is designed to be consistent with permit requirements administered by the RWQCB.

With preparation and implementation of the SWPPP, and compliance with conditions required by the County and the RWQCB, erosion and sediment from the site during construction will be controlled such that off-site impacts will be less than significant.

Stormwater Runoff from the Project Site

Stormwater that falls within the developed project site during construction and operation may potentially dissolve oils, grease, and other contaminants and carry them along with entrained sediments into Clay Creek downstream of the project site. These contaminants would potentially reduce the ability of Clay Creek to support biota and other beneficial uses.

Stormwater runoff from industrial facilities is regulated by the USEPA through the NPDES program, administered by the RWQCB. In addition to a construction NPDES permit, the applicant will be required to file a Notice of Intent (NOI) to comply with the General Permit for stormwater runoff from the industrial facility. The NOI includes a description of the measures that would be used to meet the detention, treatment, sampling, and reporting requirements of the regulations.

At this time, the applicant proposes to construct an on-site detention basin that will capture essentially all site runoff. This will maintain the volume and rate of offsite runoff at present levels that which presently occurs. On-site detention may also provide some water quality benefits.

Obtaining and complying with an NPDES Industrial Stormwater Permit will reduce the potential impacts from off-site stormwater runoff to less than significant.

Discharge of Sanitary Wastewater to Waste Treatment and Leachfield System

It is anticipated that three to five employees will be onsite during project operations; and up to 20 employees and visitors at a time. Water from toilets, sinks, showers, and washdown

areas will be disposed to a package waste treatment system and leachfield that will be located adjacent to the project site.

Leachfields can cause contamination of groundwater if operated improperly, overloaded, or located in soils that area unsuitable. The County permits waste treatment systems and leachfields based on a site-specific soil test and review and approval of the proposed design and layout of waste facilities. To date, County staff have not indicated that a septic and leachfield system would be inappropriate in this area, but site-specific data and designs are required ("perc test") before approval can be granted.

With appropriate soil testing and design review and approval by the County, disposal of sanitary waste to a packaged waste treatment and leachfield system will not cause significant adverse impacts to water resources in the project vicinity.

Cooling Water Blowdown To Clay Creek

The applicant proposes to discharge cooling water blowdown and other high quality waste streams to Clay Creek via a 14-inch pipeline. The discharge would be regulated under the NPDES program, which is administered and enforced by the RWQCB.

The NPDES program allows discharge of cooling waters and similar waste streams to surface waters if doing so does not compromise the existing or future beneficial uses of the surface waters. The applicant has prepared an NPDES application for surface water discharge (Appendix 8.14A). The NPDES application describes the proposed waste discharge in detail, including the physical and chemical characteristics, volume, and frequency of discharge. Water quality of the proposed discharge is described in detail, and the potential for adverse impacts to beneficial uses is evaluated. The RWQCB staff reviews the application and makes recommendations for numerical limits to be included in Waste Discharge Requirements (WDR), which specify the monitoring and compliance requirements. Typical numerical criteria are proposed in Table 8.14-3. A typical NPDES permit/WDR specifies the average and maximum concentrations of a variety of physical and chemical characteristics that can not be exceeded in discharges to protect downstream uses. The Ranch Seco Plant presently discharges approximately 13 mgd of cooling water under an existing NPDES permit.

An application for NPDES discharge will be submitted to the RWQCB in July 2002 and will be determined to be complete and adequate, with the exception of the supporting CEQA document, which will be this AFC. The RWQCB will approve the WDR subsequent to approval of the AFC.

In obtaining and complying with the NPDES permit and WDR, the project will reduce impacts to beneficial uses of less than significant, and, therefore, have less-than-significant impacts on water resources.

Construction of the Proposed Gas Pipeline

The proposed gas pipeline crosses 27 rivers, creeks, irrigation canals, riparian areas, vernal pools, and other drainages that are potentially jurisdictional wetlands. Most of these crossings are of highly modified stormwater drains and ditches; however, there would be two crossings of the Cosumnes River, one of Badger Creek, one of tributaries to Willow Creek, and one of Laguna Creek. Construction through wetlands can potentially disrupt the physical shape of the waterways, cause increased bank erosion, and degrade water quality

through direct contamination or increases in sediment. Bankside vegetation that holds soil and supports sensitive biota can be harmed or removed by construction. Areas that are not determined to be jurisdictional wetlands or Waters of the U.S. (such as seasonal irrigation ditches) do not require permits, but construction in these areas may not violate laws protecting water quality or endangered species without further authorization.

As described above, the ACOE prohibits fill of jurisdictional wetlands except as authorized by permit pursuant to Section 404 of the Clean Water Act. The ACOE authorizes wetland fill under Nationwide Permits for typical utility crossings, road crossings, or outfall construction of a minor and routine nature. The ACOE requires the applicant to agree to a set of Standard Conditions that require erosion and sediment control, good construction practices, notification, monitoring, and reporting to avoid adverse impacts to wetlands. Larger or more unusual wetland fill activities require an Individual Permit for which the ACOE proscribes project-specific mitigation measures. According to the ACOE, the applicant can expect to apply for a separate permit for each of the locations where pipelines crossjurisdictional wetlands (Cutler, 2001). In addition to the Section 404 permit, any construction that disturbs the "bed and banks" of a stream requires a Streambed Alteration Agreement (SAA) with CDFG, pursuant to Section 1601 of Fish and Game Code. This generally does not apply to irrigation ditches and lined canals but will apply to the Cosumnes River and Laguna Creek. CDFG determines which wetlands crossings require an SAA on a case-by-case basis. Although trenchless construction methods such as HDD avoid direct impacts to "bed and banks" of the stream, CDFG has required SAAs because of the potential for "frac outs."[2] An SAA stipulates construction methods, monitoring, mitigation, and emergency response plans for a failure in the construction system.

Table 8.14-8 provides a listing of the potential wetland crossings of the proposed gas pipeline, along with an evaluation of whether or not they are jurisdictional. Most of the wetlands are ephemeral, can be open-trenched during the dry season, and recontoured after construction to avoid any impacts to erosion or water quality. A Section 404 permit, Streambed Alteration Agreement, and Section 401 water quality waiver applications will be prepared and approved prior to construction for those wetlands that call for these requirements. The permit applications generally require a description of the beneficial uses and habitat values of the crossed waterway and specifications of the measures that would be used at that site to avoid, minimize, or compensate for adverse impacts. Compliance with the conditions specified by the ACOE, CDFG, and RWQCB in these permits and agreements will reduce impacts to crossed wetlands to less than significant.

[2] A "frac out" is an event where pressurized drilling mud in the HDD forces its way to the surface with potentially non-beneficial results.

TABLE 8.14-8
Potential Wetlands Crossed by Proposed Cosumnes Power Plant Gas Pipeline

Site	Mile [a]	Wetlands Type	Avoidance Measures	Possible Permit	Notes
1	0.20	Seasonal Wetlands	Open trench during dry season	Section 404, 401 NWP 12	Plant species indicate seasonal flooding. Shrink/swell soils are present. Construction activities would affect the edge of several wetlands. Areas occur on both sides of the railroad.
2	0.30	Seasonal Wetland	Open trench during dry season	Section 404, 401 NWP 12	Wetland plant species present as well as star thistle, suggesting temporary flooding, not lengthy inundation period. Shrink/swell soils present. This area runs parallel to the proposed pipeline route and edge would be potentially affected by construction.
3	0.60, south of Sims Road	Seasonal Wetland	Open trench during dry season	Section 404, 401 NWP 12	Dominated by cattails, approximately 1 ft. of water in August.
4	0.60, just north of Sims Road	Seasonal Wetland	Open trench during dry season	Section 404, 401 NWP 12	No vegetation is present, marginal shrink/swell soils, water ponds in wet season.
5	1.2-1.3	Seasonal Wetland	Open trench during dry season	Section 404, 401 NWP 12	Wetland species are present, shrink/swell soil is present.
6	1.7-2.0	Vernal pool	Open trench during dry season	Section 404, 401 NWP 12	Swales and remnants of characteristic vernal pool plant species.
7	2.3-2.4	Vernal pool area	Open trench during dry season	Section 404, 401 NWP 12	Potential vernal pool area. Slight depression w/ marginal vernal pool species, i.e., rabbit's foot grass, indicative of ponded areas in the wet season.
8	2.8	Vernal pool area	Open trench during dry season	Section 404, 401 NWP 12	Potential vernal pool area. Slight depression w/ marginal vernal pool species, i.e., rabbit's foot grass, indicative of ponded areas in the wet season.
9	2-3.8	Vernal pool area	Open trench during dry season	Section 404, 401 NWP 12	Grassland area with multiple vernal pools covering several acres of land. Vernal pool plant species are present.

TABLE 8.14-8
Potential Wetlands Crossed by Proposed Cosumnes Power Plant Gas Pipeline

Site	Mile [a]	Wetlands Type	Avoidance Measures	Possible Permit	Notes
10	3.0	Seasonal wetland	Open trench during dry season	Section 404, 401 NWP 12	This dry depression with wetland species covers a large area within the vernal pool complex, present on both the west and the east sides of the railroad track.
11	3.87	Seasonal Wetland Riparian vegetation/ditch	HDD borings	Section 404, 401 NWP 12 SAA 1601	
12	4.20	Ditch	Open trench during dry season		Ditch intersects pipeline crossing.
13	5.5	Ditch	Open trench during dry season		Ditch intersects pipeline. It does not appear to have wetland characteristics in aerial photo, though wetland is area is adjacent to it.
14	5.5	Seasonal Wetland	Open trench during dry season	Section 404, 401 NWP 12	This area runs parallel to the proposed pipeline route. The east side of the wetland could potentially be affected during construction
15	5.9	Ditch	Open trench during dry season		Intersects pipeline route, near seasonal wetland, but does not appear to be linked to it. Placing pipeline east of it, would avoid wetland impacts. There is some other non-wetland vegetation in this area, as seen from aerial photos.
16	6.0	Riparian Vegetation	Open trench during dry season	Section 404, 401 NWP 12 SAA 1601	This crossing occurs at the end of a row of riparian vegetation that meets the proposed pipeline perpendicular to the pipeline.
17	6.0-6.92	Unnamed stream crossing adjacent to Ed Rau Rd.	HDD borings	Section 404, 401 NWP 12 SAA 1601	There is also riparian vegetation in this area, and avoidance measures should be taken. Boring length should be increased

TABLE 8.14-8
Potential Wetlands Crossed by Proposed Cosumnes Power Plant Gas Pipeline

Site	Mile [a]	Wetlands Type	Avoidance Measures	Possible Permit	Notes
18	6.3	Ditch	Open trench during dry season		The ditch intersects the pipeline route. This is an area on the side of an agricultural field subject to ponding during the wet season. Ponding would likely occur in tire ruts that are visible from aerial photograph.
19	6.5-7.7	Ditch	Open trench during dry season		Linear roadside ditch running parallel to pipeline. Moving the pipeline to the north approximately 50 ft. would avoid this area.
20	7.93 Bruceville Road Crossing	Stream Crossing Riparian Vegetation	HDD	Section 404, 401 NWP 12 SAA 1601	A channeled stream supports a fairly dense line of mature riparian vegetation. The pipeline crosses through the riparian vegetation and the river.
21	9	Riparian vegetation	Open trench during dry season or HDD	Section 404, 401 NWP 12 SAA 1601	Riparian vegetation on north side of Core road is supported by a small stream on the south side of the road. The proposed pipeline would travel through the northern side where the vegetation occurs.
22	10.94-10.5	Riparian Vegetation Seasonal Wetland	Open trench during dry season	Section 404, 401 NWP 12 SAA 1601	Riparian vegetation lines the south side of Eschinger road. Three individual isolated seasonal wetland areas adjacent to each other cross the proposed pipeline at their northern end.
23	10.7	Ditch	Open trench during dry season		Roadside ditch parallels pipeline route. Moving pipeline south, for approximately 50 ft. for the length of 0.5 miles would avoid this area.
24	12.39-12.87	Cosumnes River Crossing	HDD borings	Section 404, 401 NWP 12 SAA 1601	Open water and well-developed riparian corridor.
25	13.28-13.61	Badger Creek crossing	HDD borings	Section 404, 401 NWP 12 SAA 1601	Open water and well-developed riparian corridor.
26	13.61-14.11 Drilling pad to Receiving pit	Lake, seasonal wetland	HDD borings	Section 404, 401 NWP 12 SAA 1601	Lake is part of a larger stream and seasonal wetland system. Vernal pools occur to the south west

TABLE 8.14-8
Potential Wetlands Crossed by Proposed Cosumnes Power Plant Gas Pipeline

Site	Mile [a]	Wetlands Type	Avoidance Measures	Possible Permit	Notes
27	14.11-14.35	Highway 99 crossing, Unnamed stream crossing and Vernal Pool	HDD borings	none	The stream crossing and vp happen to be in the bore areas
28	14.35-18.73	Unnamed Stream Crossing at 14.8	HDD borings	Section 404, 401 NWP 12 SAA 1601	Stream crossing with riparian vegetation on the proposed pipeline route in an area with a vernal pool complex to the north. Parallel to the riparian vegetation, south of the road, is private land containing at least 7 structures.
29	14.36- 17.00	Ditch	Open trench during dry season		Can avoid this area by moving pipeline north approximately 50ft further into agricultural land. One issue to be aware of is a private residence that the pipeline crosses currently. By moving it north, the pipeline would move further into the private property.
	17.40-17.50	Ditch	Open trench during dry season		Adjust the pipeline north approximately 50 ft. to avoid this area.
30	17.70-18.72	Ditch	Open trench during dry season		Adjust pipeline south approximately 50 ft. into agricultural land to avoid area.
31	18.73-18.90	Ditch	Open trench during dry season		Roadside ditch. Adjust pipeline approximately 50 ft. to the south to avoid area.
32	18.73-20.47 California Traction to Laguna Creek	Stream crossing (unnamed)	HDD borings	Section 404, 401 NWP 12 SAA 1601	Appears to be a manmade stream, with some riparian habitat present. Though stream ends without crossing the road at this point, the pipeline crosses near the end.
33	19.30-20.00	Ditch	Open trench during dry season		Roadside ditch. Area can be avoided by moving pipeline approximately 50 ft. to the south.

TABLE 8.14-8
Potential Wetlands Crossed by Proposed Cosumnes Power Plant Gas Pipeline

Site	Mile [a]	Wetlands Type	Avoidance Measures	Possible Permit	Notes
34	20.47-21.58 Laguna Creek to Rail Road Bore	Seasonal Wetland	Open trench during dry season	Wetlands: Section 404, 401 NWP 12	Two seasonal wetlands occur in this section. One occurs just north of and parallel to the proposed route. Construction has the potential to impact the edge of this area. The second is a small v-shaped system that bisects the pipeline route
35	21.60-22.60 Railroad Bore to Folsom South Canal	Seasonal Wetland	Open trench during dry season	Wetlands: Section 404, 401 NWP 12	This stretch contains a continuous line of individual seasonal wetlands located in the roadside ditch along the proposed route. More extensive wetland systems occur to the northwest and to the southeast of this section
36	21.6-22.0	Ditch	Open trench during dry season		Occurs in the same path of the pipeline route and for is also designated as seasonal wetland (see description above for Site 35). Follow same avoidance measures as listed above for Site 35
37	22.6-24 Folsom South Canal to East Clay Road	Seasonal Wetland	Open trench during dry season	Wetlands: Section 404, 401 NWP 12	The surrounding area has extensive seasonal wetlands, some, parts of larger systems, some, isolated pools. Nine (9) seasonal wetlands occur in this stretch, one, for a substantial distance along the proposed route. Five (5) of the wetlands are relatively small areas along the road which hold water during the rainy season. One (1) is extensive and occurs for a significant portion along the proposed route. Three (3) are portions of 3 separate channelized wetland systems, occurring on both sides of the highway and bisecting the route.
38	23.3-23.8	Ditch	Open trench during dry season		Roadside ditch. Occurs in the same path of the pipeline route and is also designated as seasonal wetland (see description above for Site 37). Follow same avoidance measures as listed above for Site 37.
39	25.2-25.7	Ditch	Open trench during dry season		Roadside ditch running parallel to pipeline on the edge of agricultural land. Moving the pipeline approximately 50 ft to the north would avoid this area.

TABLE 8.14-8
Potential Wetlands Crossed by Proposed Cosumnes Power Plant Gas Pipeline

Site	Mile [a]	Wetlands Type	Avoidance Measures	Possible Permit	Notes
40	24-26 East Clay Road to Rancho Seco site	Seasonal wetlands, riparian vegetation, stream crossing	Open trench during dry season	Wetlands: Section 404, 401 NWP 12 SAA 1601	This stretch along the pipeline route is dotted with 14 Seasonal wetlands, 2 vernal pools, and one area of riparian vegetation. The wetlands are made up of branches of ephemeral streams stemming off of a centralized area, as well as isolated individual wetlands that have established in low lying areas, such as in ditches. One vernal pool the proposed route crosses is part of a larger body occurring on both sides of Clay East Road. It is a portion of a larger vernal pool area which is situated primarily south of the road. The second vernal pool is an isolated vernal pool along the proposed route. The riparian vegetation, remnants of a natural system, extends from a stock pond and farm on the north side of East Clay Road. It crosses the proposed route at the road and extends to another pond. On this side of the road (south) is a vernal sink occurring in close proximity to the riparian vegetation, but not in the pipeline route. The ephemeral stream, crosses road through a culvert. It is a narrow channel that appears to branch out from a larger wetland system. The branch crosses the road and the pipeline route, dissipates in a pasture on the east side of the road, and then continues into a larger wetland system. Vernal pools also are in the immediate area.

[a] Mile markers are based on estimation from aerial photographs.

8.14.5.2 Groundwater

The project would not use groundwater on the project site for any purpose. Therefore, withdrawals for water supply would not adversely affect other groundwater users in the vicinity.

The area that will be paved by the proposed project is not a significant recharge area for groundwater and, thus, will not reduce the available recharge of groundwater.

Implementation of BMPs and appropriate waste storage and management, will reduce the potential for spills or other upset, which could result in environmental contamination and adversely affect groundwater quality.

The project will not substantially deplete groundwater supplies or interfere with groundwater recharge such that there would be a net deficit in aquifer volume or a lowering of the local groundwater table level.

8.14.5.3 Flooding Potential

The project will be constructed outside the 100-year flood plain and will capture stormwater runoff from the site in an on-site detention basin; therefore, there will be no increase in the rate of off-site runoff. Construction of the project will require altering the local drainage patterns of three ephemeral swales that are tributaries to Clay Creek. However, these alterations will not increase the rate or amount of surface runoff in a manner that will result in flooding on- or off-site.

Stormwater runoff will be captured and held in an on-site stormwater detention basin so that runoff will neither exceed the capacity of existing or planned stormwater drainage systems, nor cause substantial additional sources of polluted runoff.

The project will be constructed outside the 100-year flood hazard area, and will not place housing within a 100-year flood hazard area. Neither will the project place any structures that would impede flood flows. Seasonal stormwater drainage that flows in the three tributaries to Clay Creek will be redirected around the site, but the rate or volume of flow in Clay Creek (approximately 0.1 mile north of the site) will remain unchanged. This would have no impact on flooding.

Because the project will not cause local flooding, the project will not expose people or structures to a significant risk of loss, injury, or death involving flooding, including flooding as a result of the failure of a levee or dam.

Finally, the project will be constructed outside any area where inundation by seiche, tsunami, or mudflow has historically, or would be likely to occur in the future.

8.14.6 Mitigation

The following sections describe proposed mitigation to avoid, reduce, or compensate for potential adverse impacts potentially resulting from project implementation.

8.14.6.1 Surface Water

To mitigate for potential impacts described in 8.14.5.1 above, the applicant will implement the following mitigation measures to reduce impacts to levels that are less than significant.

- Diversions and relocations of the three tributaries to Clay Creek will be permitted, designed and constructed according to agreements with the ACOE, RWQCB, and CDFG. Conditions specifying the measures implemented to support continued flood capacity, beneficial uses, and prevention of erosion and sedimentation will be specified in these permits and agreements. With mitigation, impacts will be less than significant.
- An NPDES stormwater permit will be obtained from the County prior to grading and clearing the estimated 50-acre site. The NPDES permit will contain conditions and specifications to implement appropriate Best Management Practices to avoid adverse impacts to stormwater receiving waters. With mitigation, impacts will be less than significant.
- An NPDES industrial operations stormwater permit will be obtained from the RWQCB prior to operation of the facility. The NPDES permit will contain conditions and specifications to implement appropriate BMPs to avoid adverse impacts to stormwater receiving waters, as well as monitoring and reporting requirements to comply with the RWQCB stormwater program. The District anticipates that an on-site stormwater detention basin will be constructed that will attenuate the rate of off-site flows. With mitigation, impacts will be less than significant.
- Sanitary wastewater will be discharged to an on-site packaged waste treatment system and leachfield. The design of the leachfield will be reviewed by the County of Sacramento for compliance with appropriate standards to avoid potential for adverse impacts to surface or groundwaters. With appropriate design, assured by the required County review of the design and location of the septic system and leachfield, adverse impacts will be less than significant
- Cooling water blowdown and other wastestreams would be discharged to Clay Creek under an NPDES permit issued by the RWQCB. The RWQCB requires an application that specifies the expected water quality of effluent; the agency issues WDRs that limit the concentrations of chemical constituents of the effluent to ensure beneficial uses of downstream surface or groundwaters are not adversely affected. The WDRs also specify monitoring and reporting requirements to assure long-term compliance. The RWQCB evaluates permits every 5 years and adjusts the effluent limitations if necessary to protect beneficial uses. Compliance with the WDRs issued by the RWQCB will assure that discharges from cooling water and other wastestreams do not cause adverse impacts to beneficial uses.
- For each location where the gas pipeline will cross a river (Cosumnes River, Laguna Creek, Badger Creek, Clay Creek), irrigation ditches, canals, vernal pools, and ephemeral streams, the applicant will determine whether the waters are jurisdictional, and obtain necessary authorizations under Section 404. If necessary, Streambed Alteration Agreements and Section 401 Water quality waivers would be obtained. The applicant expects to use trenchless construction methods, such as HDD, or conventional jack and bore methods to construct the pipeline under rivers such as the Cosumnes, Badger Creek, Laguna Creek, and Clay Creek. A “frac out” plan will be developed and approved by CDFG prior to use of HDD under waterway. The “frac out” plan will specify measures to avoid, minimize, and, if necessary, respond to “frac out” events. Where allowed by permit, conventional trench construction will be used to cross

irrigation ditches, ephemeral streams, or canals. Vernal pools, potentially occupied by federally listed species, will be avoided by trenchless construction or crossed in a manner permitted by the USFWS.

8.14.6.2 Groundwater

The project will cause no significant impacts on groundwater quantity or quality; therefore, no mitigation is required.

8.14.6.3 Flooding Potential

The project will cause no significant impacts on flooding potential; therefore, no mitigation is required.

8.14.7 Proposed Monitoring Plans and Compliance Verification Procedures

The applicant anticipates applying for and complying with permits listed in Section 8.14.9, below. Compliance with these permits typically requires monitoring, reporting, and verification to the agency issuing the permit. The applicant anticipates that these reports would also be made available to the CEC compliance staff if requested.

8.14.8 Cumulative Impacts

The project site is located in a rural area, with relatively little development. The dominant land use in the area is agricultural. In recent years there has been a gradual conversion of open pasture uses to vineyards, and a gradual increase in the number of residences established on 5- to 500-acre parcels. There are no other industrial developments or large paved areas anticipated in the project area. All impacts to surface and groundwater quality from this project will be reduced to less than significant through implementation of permit conditions and compliance measures.

Therefore, the cumulative impacts of this project, when considered in conjunction with the other types of development anticipated in the region, are not expected to cause cumulatively significant impacts to water quality in the area.

8.14.9 Permits Required

Water quality permits required for the project include the following:

- Sacramento County Grading Permit, Sacramento County Code 16.44
- CVRWQCB Construction Activity NPDES Stormwater Permit General Permit
- CVRWQCB General Industrial NPDES Stormwater Permit General Permit
- CVRWQCB General NPDES Discharge Permit
- Streambed Alteration Agreement (Section 1601) for modifications to any creek, if required, for construction of the water or gas pipelines
- U.S. Army Corps of Engineers Wetlands fill permit Section 404 for fill in jurisdictional wetlands
- Water Quality Certification Section 401 from the RWQCB if a 404 permit is required

8.14.10 Agency Contacts

A summary of required permits is provided in Table 8.14-9.

TABLE 8.14-9
Permits and Permitting Agencies for CPP Water Resources

Permit/ Implementation	Agency
County Grading Permit Applicant will file application within 90 days prior to construction	Tony Do Sacramento County Public Works Agency 827 7th St., Room 304 Sacramento, CA 95814 (916) 874-6581 (Fax) 916-874-7100
County Stormwater Requirements Applicant will file application within 90 days prior to construction	Tony Do Sacramento County (as above)
Construction Activity NPDES Stormwater and General Industrial Stormwater Permit Applicant will file application within 90 days prior to construction	RWQCB Leo Sarmiento (916) 255-3049
NPDES Permit for Discharge to Surface Water Required prior to operation. Application included in Appendix 8.14A	RWQCB Patricia Leary (916) 255-3023
Water Quality Certification (Section 401) in support of Section 404 agreement Applicant will file application for waiver upon Corps verification of 404 application	RWQCB Patricia Leary (916) 255-3023
Streambed Alteration Agreement 1601 Applicant has initiated consultation with CDFG to determine conditions to avoid impacts. Agreement required prior to construction	Dale Whitmore Gary Hobgood CDFG Streambed Alteration Agreements (916) 983-5162
Wetlands Permit 404 (and Water Quality Certification, Section 401) Wetland Delineations complete for project site Notifications for wetlands crossings pursuant to NWP 12 of Section 404, anticipated 90 days prior to construction	USACOE Justin Cutler U.S. Army Corps of Engineers (916) 557-5258

8.14.11 References

RWQCB. 2000. A Compilation of Water Quality Goals. August 2000.

Cutler, Justin. 2001. Project Manager, Army Corps of Engineers, Sacramento. Personal communication with EJ Koford of CH2M HILL. June 25.

DWR. 1974. Evaluation of Ground Water Resources, Sacramento County. Bulletin No. 118-3.

Federal Register. 2000. Final Issuance and Modification of Nationwide Permits; Notice. Pps. 12818-12899. March 9.

Federal Emergency Management Agency (FEMA). 1980. Flood Insurance Rate Maps 500 and 525, Sacramento County.

Psomas and Associates. 1993. Engineering Data for environmental review. *In* SMUD 1994.

RWQCB. 1996. Adopted Waste Discharge Requirements for Sacramento Municipal Utility District, Rancho Seco Nuclear Generating Station, Unit 1 and Rancho Seco Park, Sacramento County. March 27.

Sacramento County. 1992. Planning and Community Development Department. Conservation Element of the County General Plan.

SMUD. 1994. Draft Environmental Impact Report for Rancho Seco Park Master Plan. January.

SMUD. 1991. Initial study and proposed negative declaration. Rancho Seco nuclear generating station proposed decommissioning plan *in* SMUD 1994.

U. S. Environmental Protection Agency. 2000. Integrated Risk Information System [IRIS] database (as of 24 August 2000). Available: http://www.epa.gov/iris.

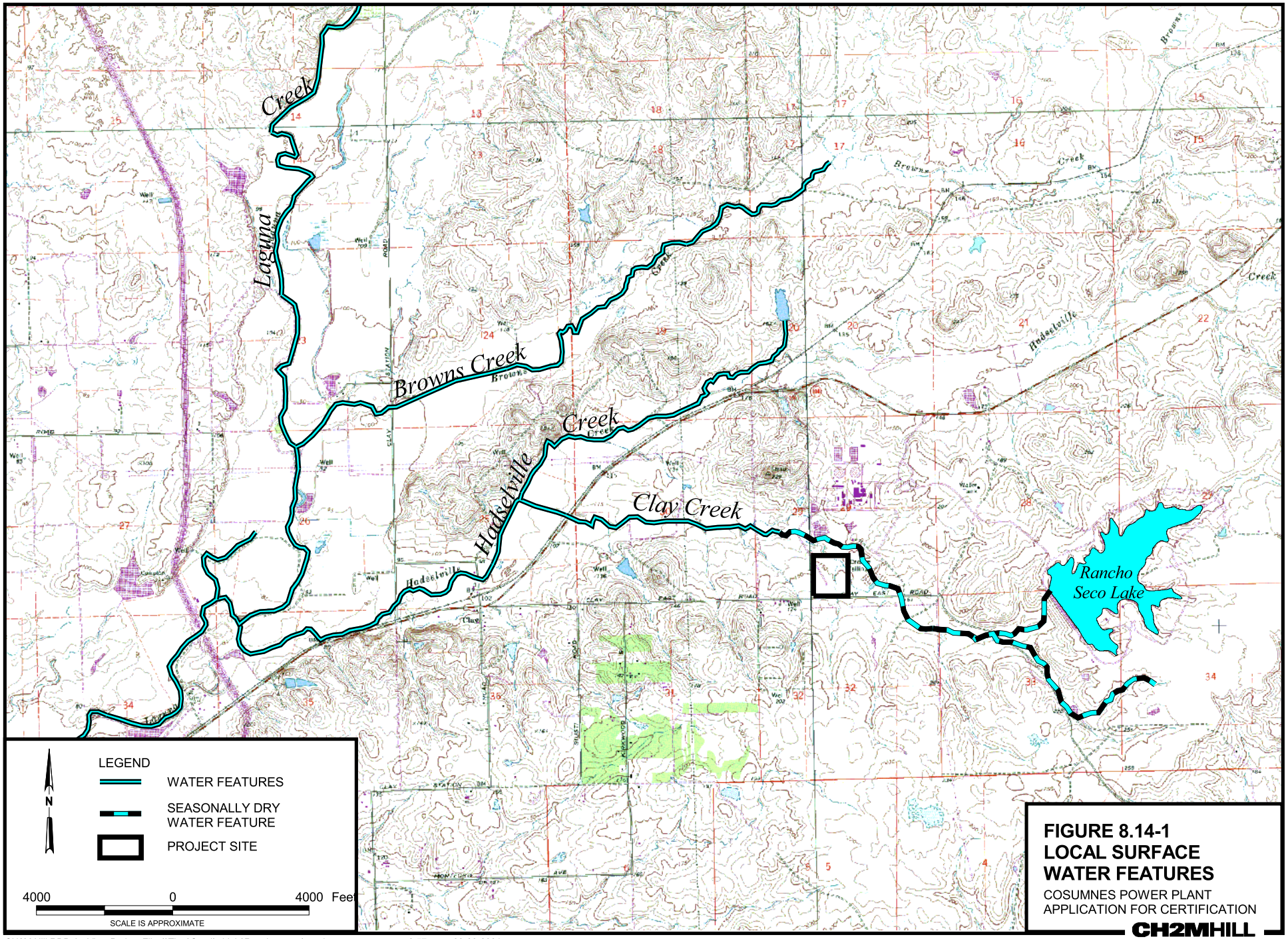

FIGURE 8.14-1
LOCAL SURFACE WATER FEATURES
COSUMNES POWER PLANT
APPLICATION FOR CERTIFICATION
CH2MHILL

CH2M Hill RDD ArcView Project File \\Thor\Cart1\rddgis\Rancho_seco\rancho_seco_water.apr 8:57 a.m. 08-23-2001

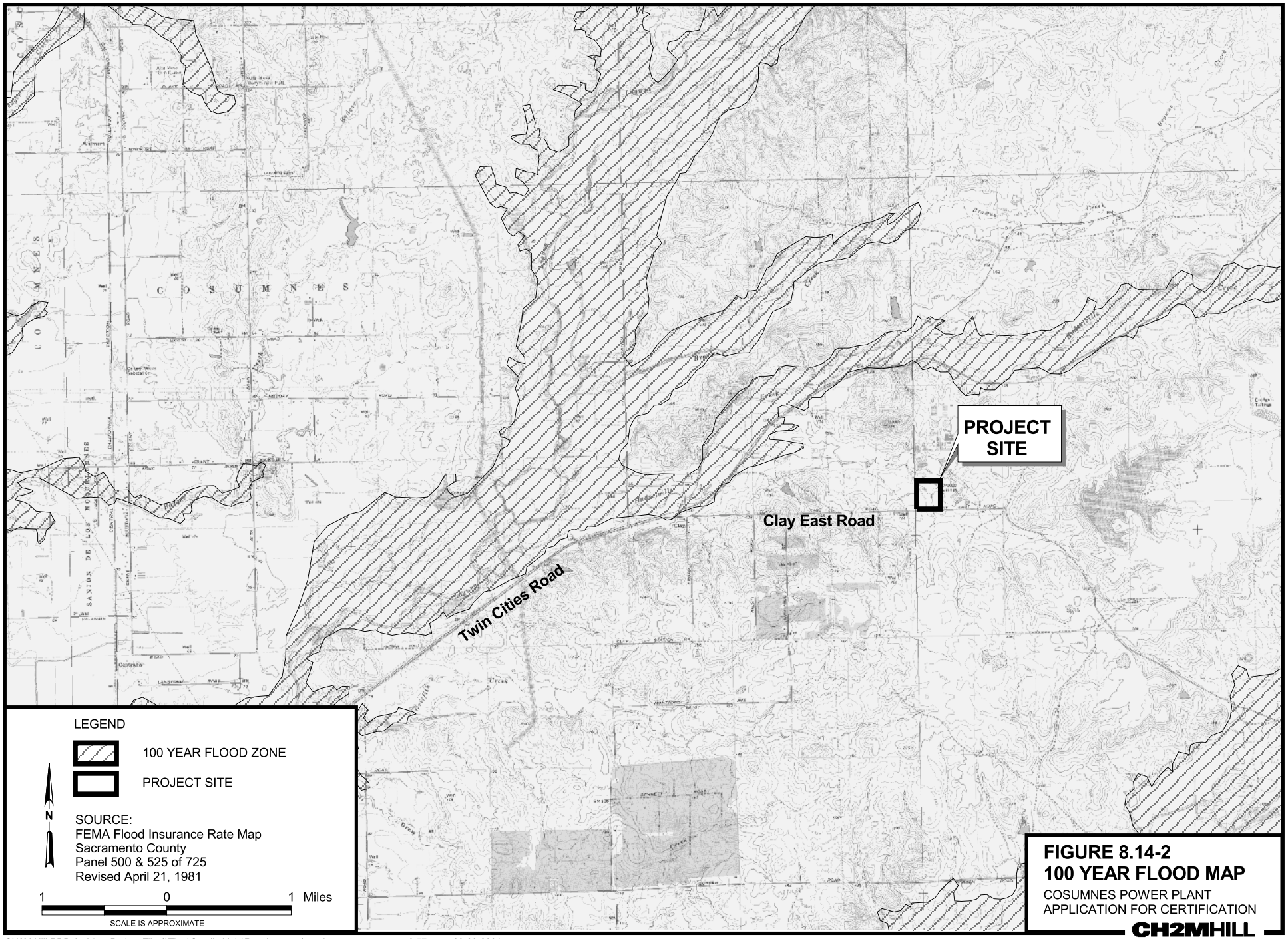

FIGURE 8.14-2
100 YEAR FLOOD MAP
COSUMNES POWER PLANT
APPLICATION FOR CERTIFICATION
CH2MHILL

CH2M Hill RDD ArcView Project File \\Thor\Cart1\rddgis\Rancho_seco\rancho_seco_water.apr 8:57 a.m. 08-23-2001

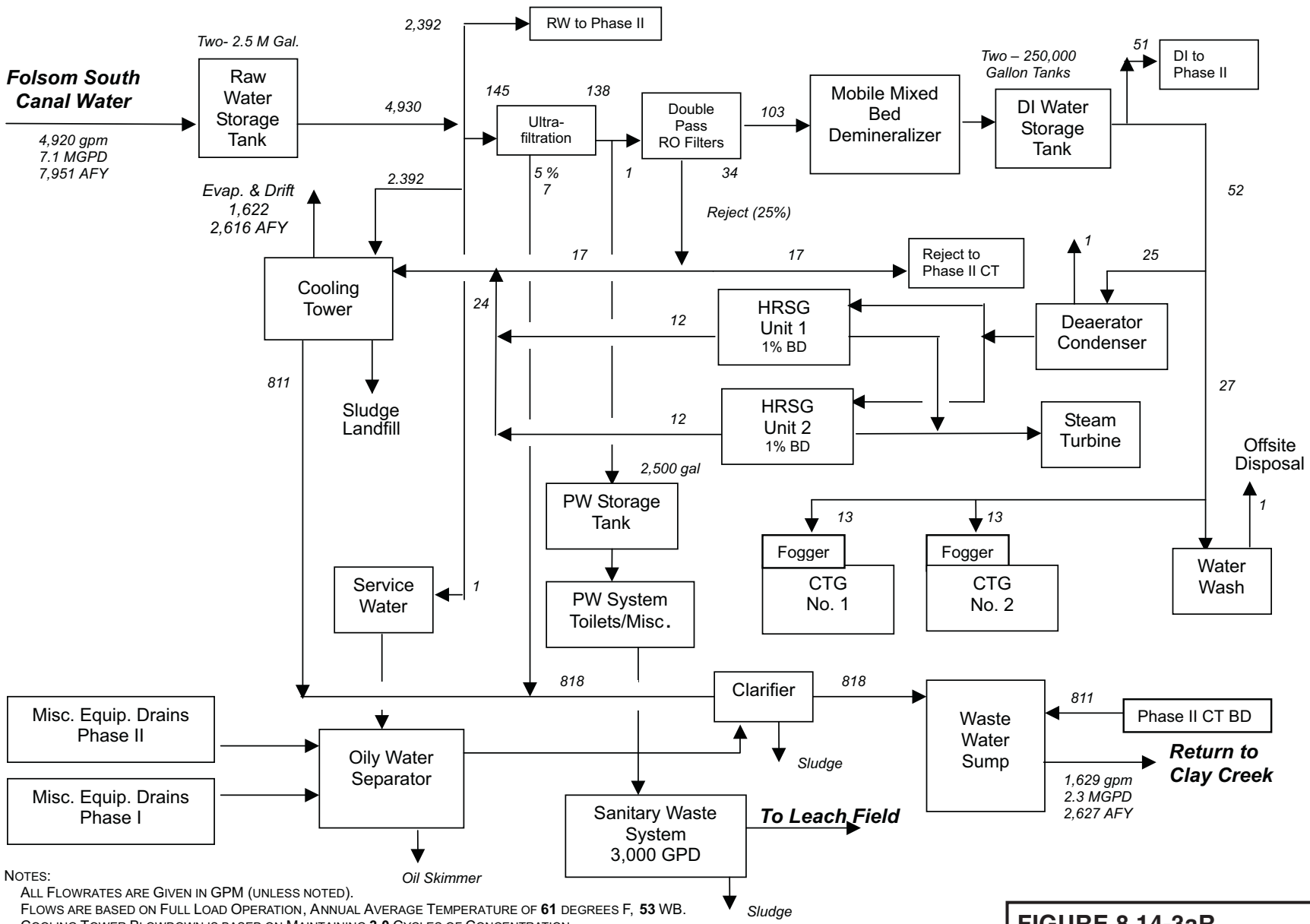

NOTES:
ALL FLOWRATES ARE GIVEN IN GPM (UNLESS NOTED).
FLOWS ARE BASED ON FULL LOAD OPERATION, ANNUAL AVERAGE TEMPERATURE OF **61** DEGREES F, **53** WB.
COOLING TOWER BLOWDOWN IS BASED ON MAINTAINING **3.0** CYCLES OF CONCENTRATION.
FLOWS ARE BASED ON FOLSOM SOUTH CANAL WATER CONSTITUENTS SPECIFIED.

SOURCE: PB POWER, INC.

FIGURE 8.14-3aR
PHASE I – ANNUAL AVERAGE WATER BALANCE DIAGRAM
COSUMNES POWER PLANT
APPLICATION FOR CERTIFICATION

CH2MHILL

D062001002RDD_10 (9/9/01)

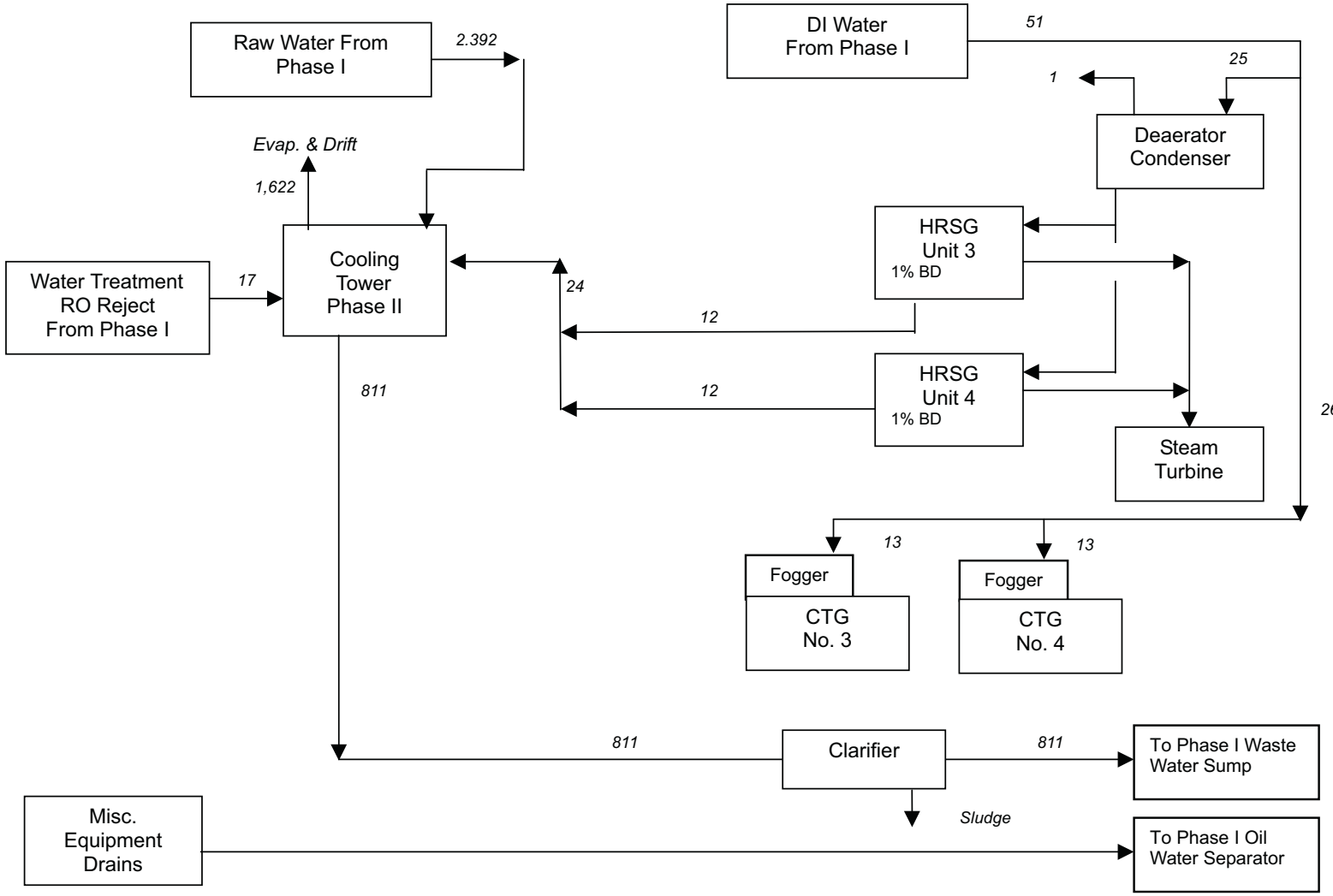

NOTES:
ALL FLOWRATES ARE GIVEN IN GPM.
FLOWS ARE BASED ON FULL LOAD OPERATION, ANNUAL AVERAGE TEMPERATURE OF **61** DEGREES F, **53** WB.
COOLING TOWER BLOWDOWN IS BASED ON MAINTAINING **3.0** CYCLES OF CONCENTRATION.
FLOWS ARE BASED ON FOLSOM SOUTH CANAL WATER CONSTITUENTS SPECIFIED.
SOURCE: PB POWER, INC.

FIGURE 8.14-3b
PHASE II – ANNUAL AVERAGE WATER BALANCE DIAGRAM
COSUMNES POWER PLANT
APPLICATION FOR CERTIFICATION

CH2MHILL

D062001002RDD_10 (9/4/01)

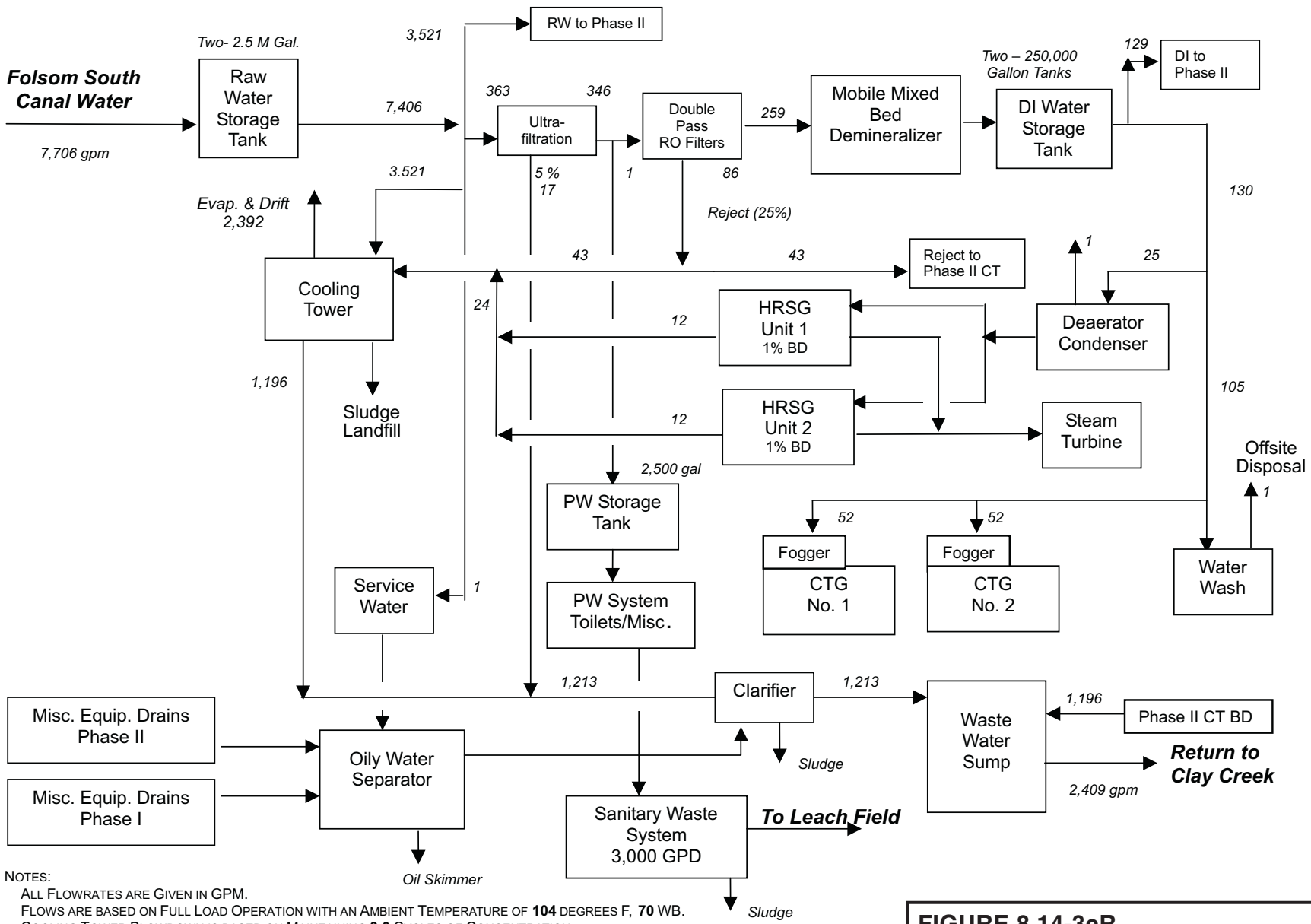

NOTES:
ALL FLOWRATES ARE GIVEN IN GPM.
FLOWS ARE BASED ON FULL LOAD OPERATION WITH AN AMBIENT TEMPERATURE OF **104** DEGREES F, **70** WB.
COOLING TOWER BLOWDOWN IS BASED ON MAINTAINING **3.0** CYCLES OF CONCENTRATION.
FLOWS ARE BASED ON FOLSOM SOUTH CANAL WATER CONSTITUENTS SPECIFIED.

SOURCE: PB POWER, INC.

FIGURE 8.14-3cR
PHASE I – 104 DEGREES FAHRENHEIT PEAK WATER BALANCE DIAGRAM
COSUMNES POWER PLANT
APPLICATION FOR CERTIFICATION

CH2MHILL

D062001002RDD_10 (9/9/01)

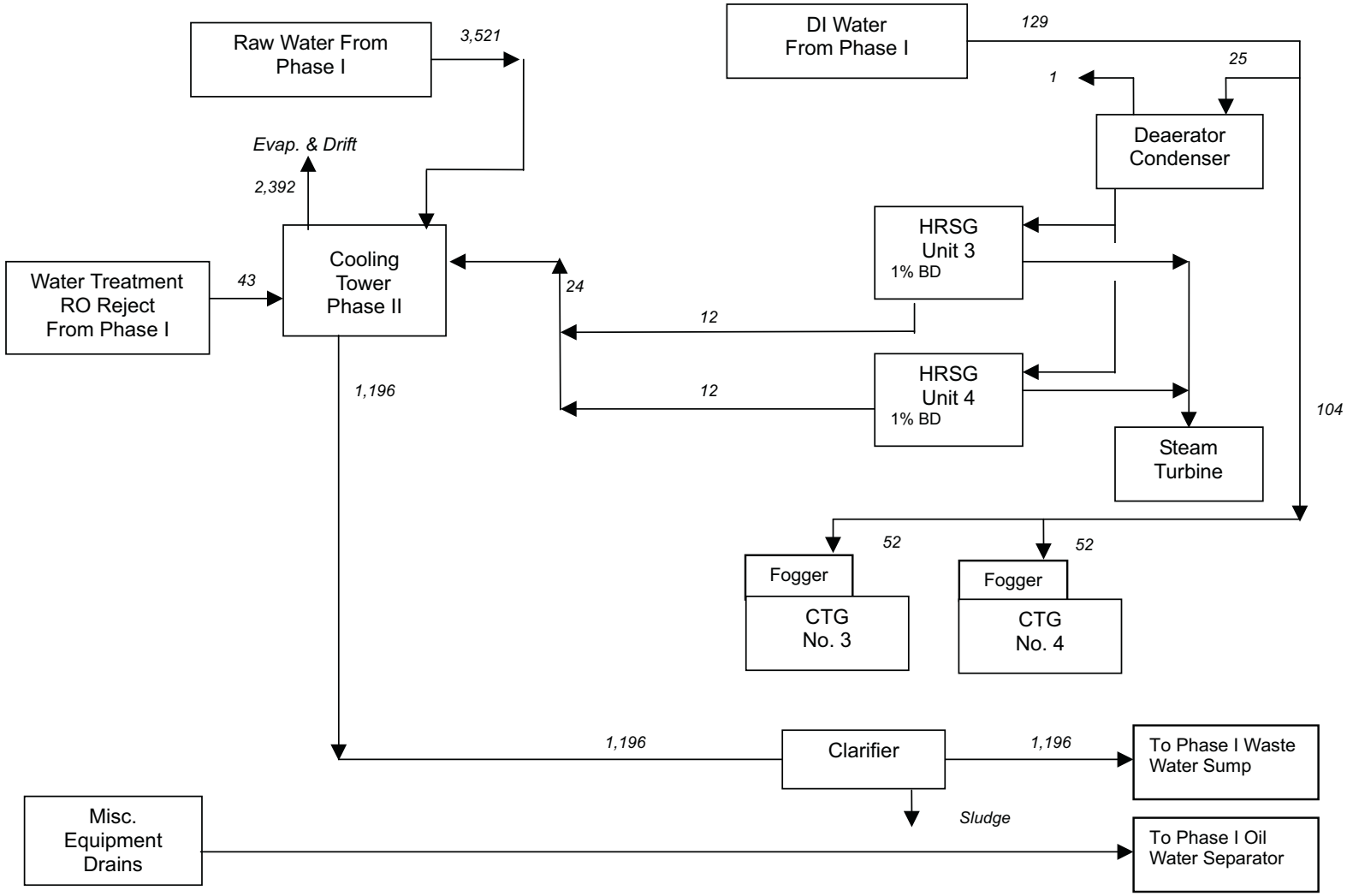

NOTES:
ALL FLOWRATES ARE GIVEN IN GPM.
FLOWS ARE BASED ON FULL LOAD OPERATION WITH AN AMBIENT TEMPERATURE OF **104** DEGREES F, **70** WB.
COOLING TOWER BLOWDOWN IS BASED ON MAINTAINING **3.0** CYCLES OF CONCENTRATION.
FLOWS ARE BASED ON FOLSOM SOUTH CANAL WATER CONSTITUENTS SPECIFIED.

SOURCE: PB POWER, INC.

FIGURE 8.14-3d
PHASE II – 104 DEGREES FAHRENHEIT PEAK WATER BALANCE DIAGRAM
COSUMNES POWER PLANT
APPLICATION FOR CERTIFICATION

CH2MHILL

D062001002RDD_10 (9/4/01)

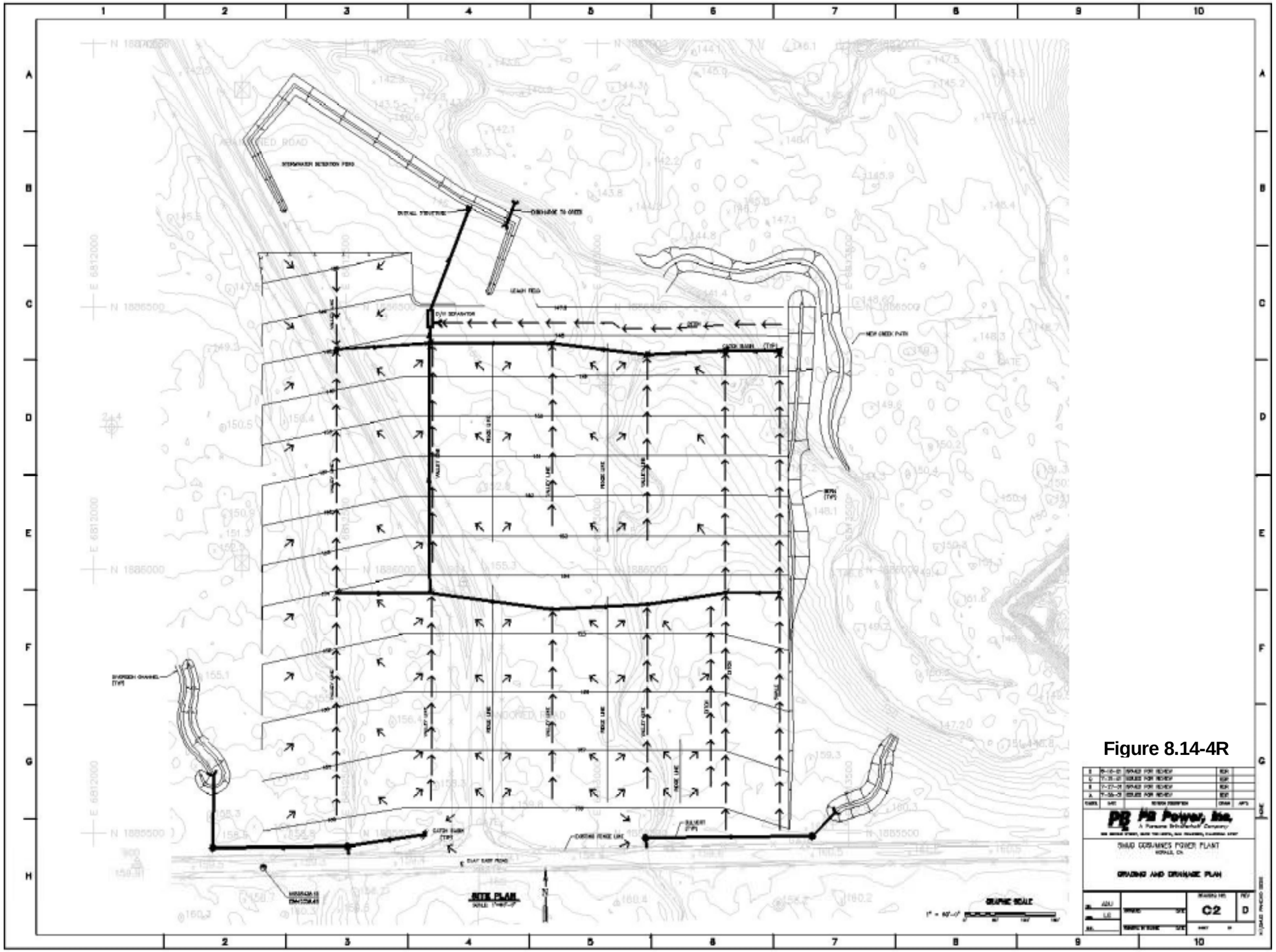

Figure 8.14-4R

LEGEND

PROJECT SITE

N

200 0 200 Feet

SCALE IS APPROXIMATE

FIGURE 8.14-5
SURFACE WATERS POTENTIALLY AFFECTED BY THE PROJECT

COSUMNES POWER PLANT
APPLICATION FOR
CERTIFICATION

CH2MHILL

CH2M Hill RDD ArcView Project File \\Thor\Cart1\rddgis\Rancho_seco\rancho_seco_water.apr 1:36 p.m. 10-23-2001

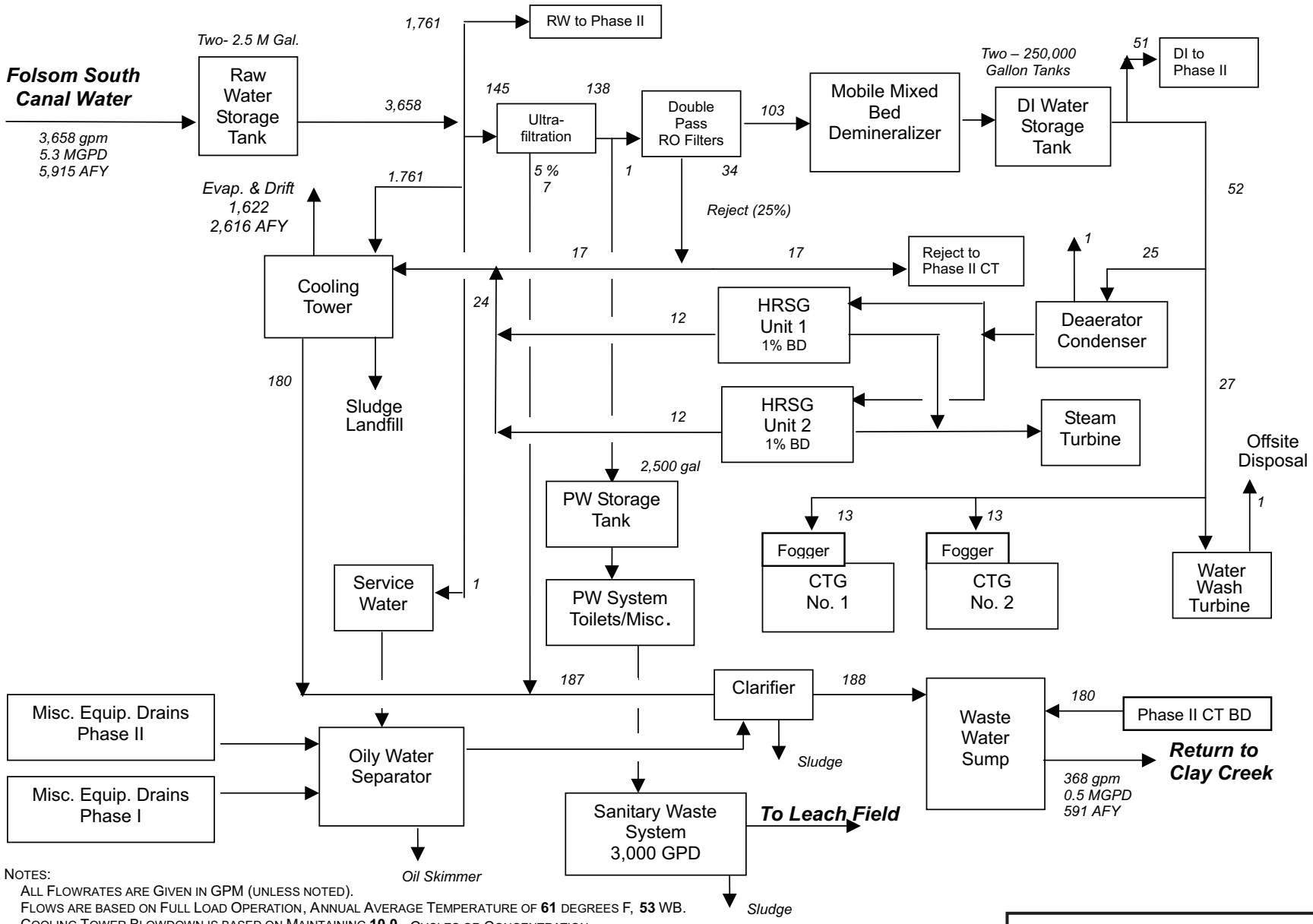

NOTES:
ALL FLOWRATES ARE GIVEN IN GPM (UNLESS NOTED).
FLOWS ARE BASED ON FULL LOAD OPERATION, ANNUAL AVERAGE TEMPERATURE OF **61** DEGREES F, **53** WB.
COOLING TOWER BLOWDOWN IS BASED ON MAINTAINING **10.0** CYCLES OF CONCENTRATION
FLOWS ARE BASED ON FOLSOM SOUTH CANAL WATER CONSTITUENTS SPECIFIED.

SOURCE: PB POWER, INC.

FIGURE 8.14-6a
PHASE I – ANNUAL AVERAGE WATER BALANCE DIAGRAM
COSUMNES POWER PLANT
APPLICATION FOR CERTIFICATION

CH2MHILL

D062001002RDD_090 (11/12/01)

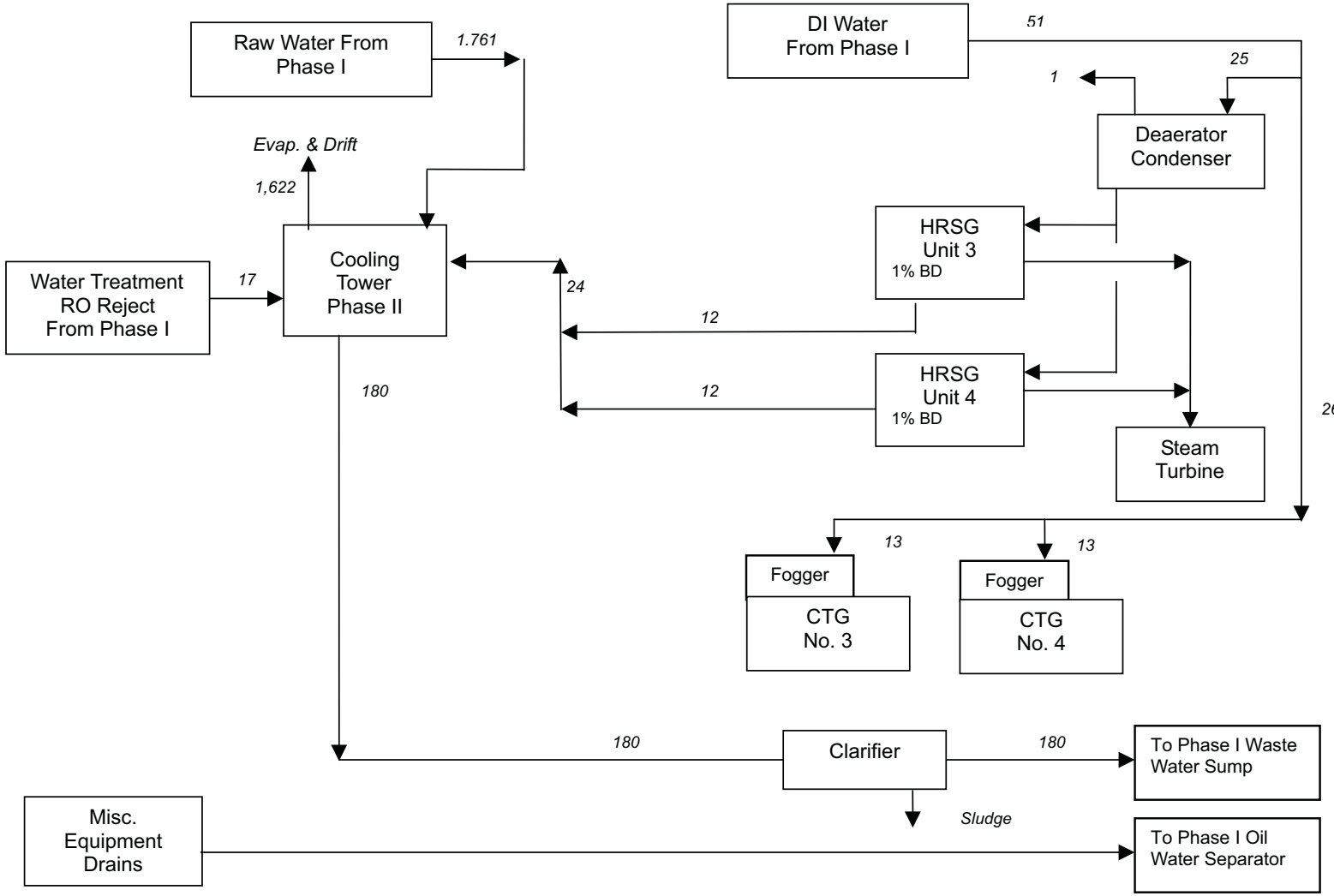

NOTES:
ALL FLOWRATES ARE GIVEN IN GPM.
FLOWS ARE BASED ON FULL LOAD OPERATION, ANNUAL AVERAGE TEMPERATURE OF **61** DEGREES F, **53** WB.
COOLING TOWER BLOWDOWN IS BASED ON MAINTAINING **10.0** CYCLES OF CONCENTRATION
FLOWS ARE BASED ON FOLSOM SOUTH CANAL WATER CONSTITUENTS SPECIFIED.

SOURCE: PB POWER, INC.

FIGURE 8.14-6b
PHASE II – ANNUAL AVERAGE WATER BALANCE DIAGRAM
COSUMNES POWER PLANT
APPLICATION FOR CERTIFICATION

CH2MHILL

D062001002RDD_090 (11/12/01)

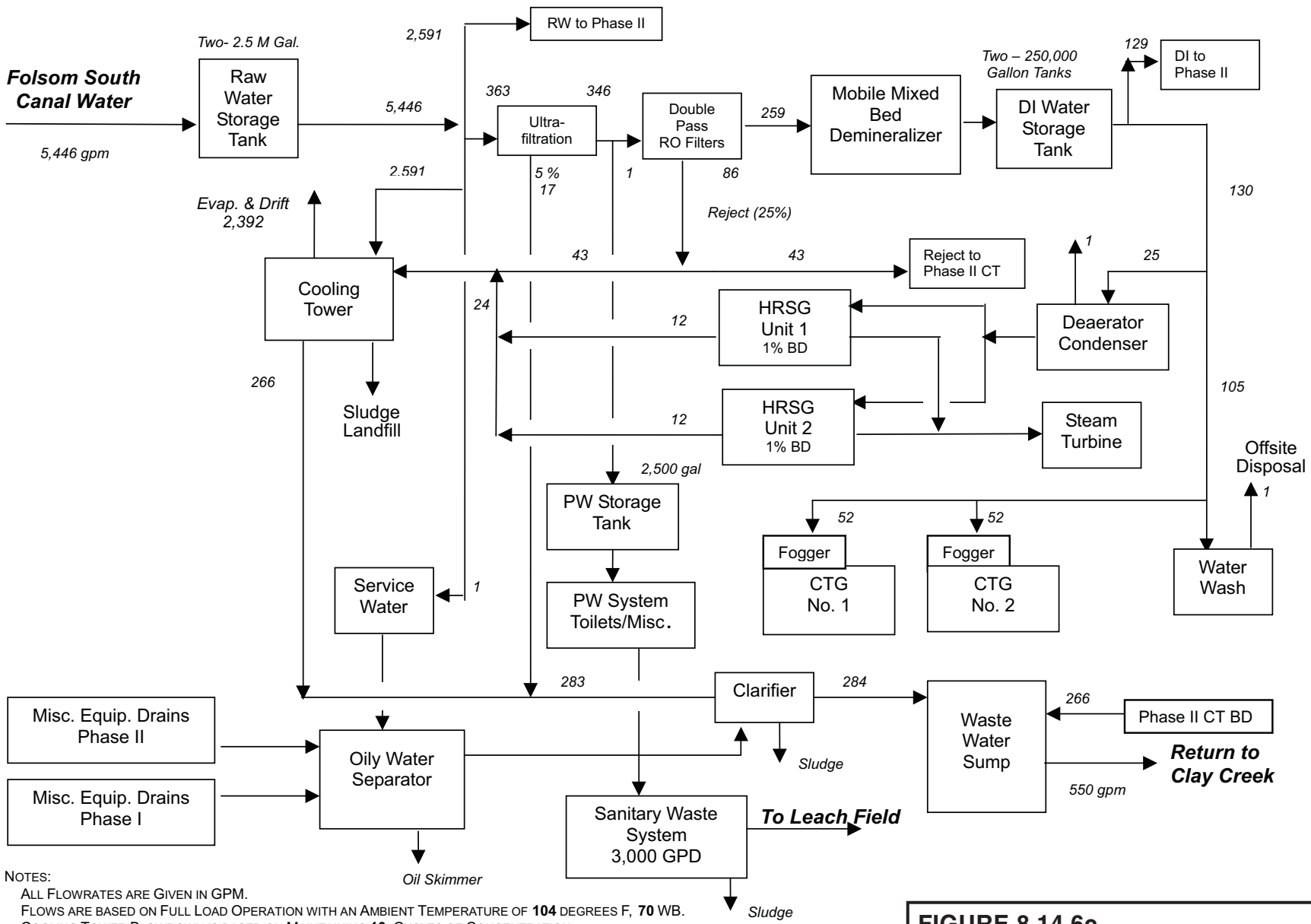

NOTES:
ALL FLOWRATES ARE GIVEN IN GPM.
FLOWS ARE BASED ON FULL LOAD OPERATION WITH AN AMBIENT TEMPERATURE OF **104** DEGREES F, **70** WB.
COOLING TOWER BLOWDOWN IS BASED ON MAINTAINING **10** CYCLES OF CONCENTRATION.
FLOWS ARE BASED ON FOLSOM SOUTH CANAL WATER CONSTITUENTS SPECIFIED.

SOURCE: PB POWER, INC.

FIGURE 8.14.6c
PHASE I – 104 DEGREES FAHRENHEIT PEAK WATER BALANCE DIAGRAM
COSUMNES POWER PLANT
APPLICATION FOR CERTIFICATION

D062001002RDD_100 (11/12/01)

CH2MHILL

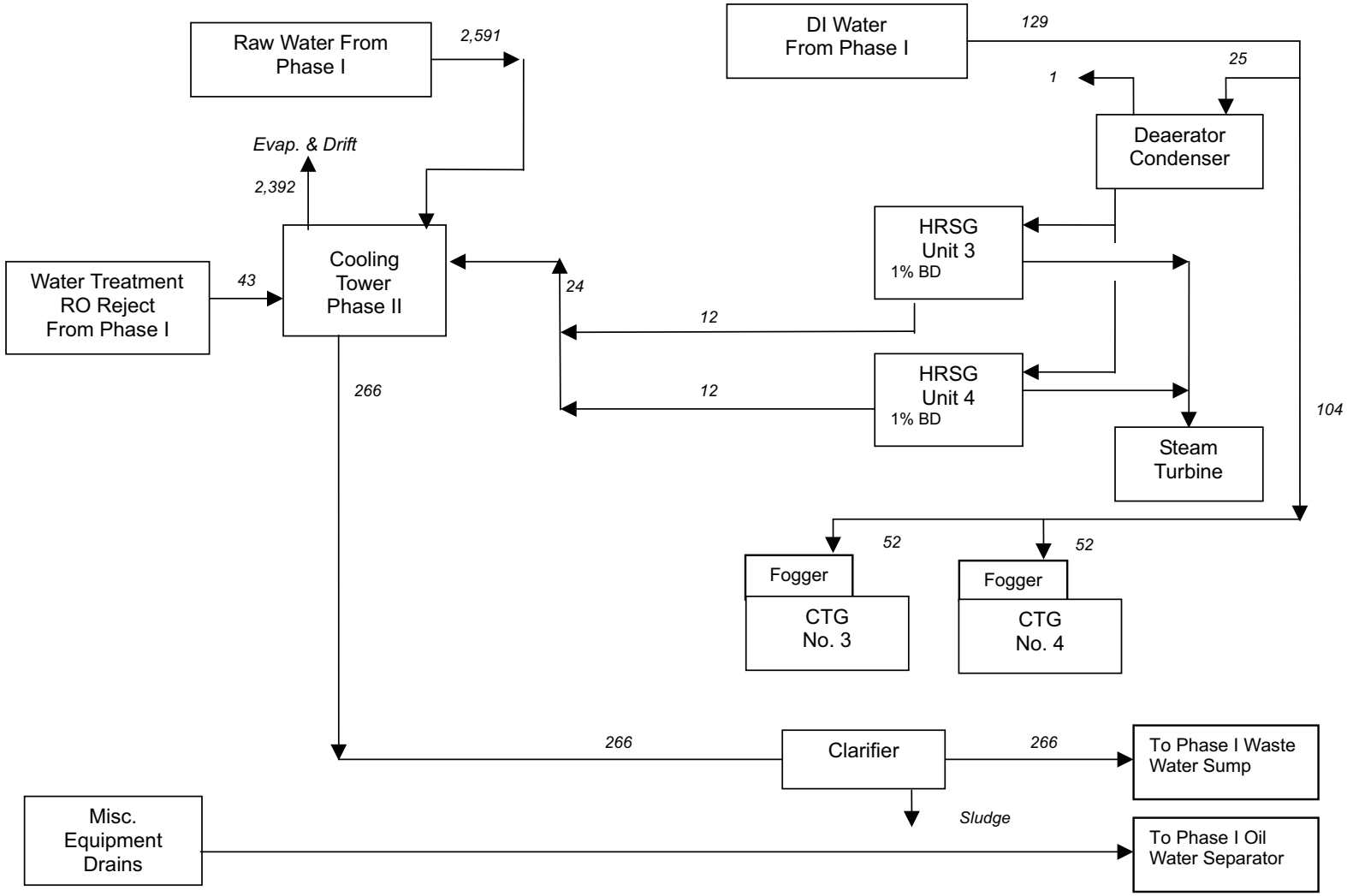

NOTES:
ALL FLOWRATES ARE GIVEN IN GPM.
FLOWS ARE BASED ON FULL LOAD OPERATION WITH AN AMBIENT TEMPERATURE OF **104** DEGREES F, **70** WB.
COOLING TOWER BLOWDOWN IS BASED ON MAINTAINING **10** CYCLES OF CONCENTRATION.
FLOWS ARE BASED ON FOLSOM SOUTH CANAL WATER CONSTITUENTS SPECIFIED.

SOURCE: PB POWER, INC.

FIGURE 8.14-6d
PHASE II – 104 DEGREES FAHRENHEIT PEAK WATER BALANCE DIAGRAM
COSUMNES POWER PLANT
APPLICATION FOR CERTIFICATION

D062001002RDD_100 (11/12/01)

CH2MHILL

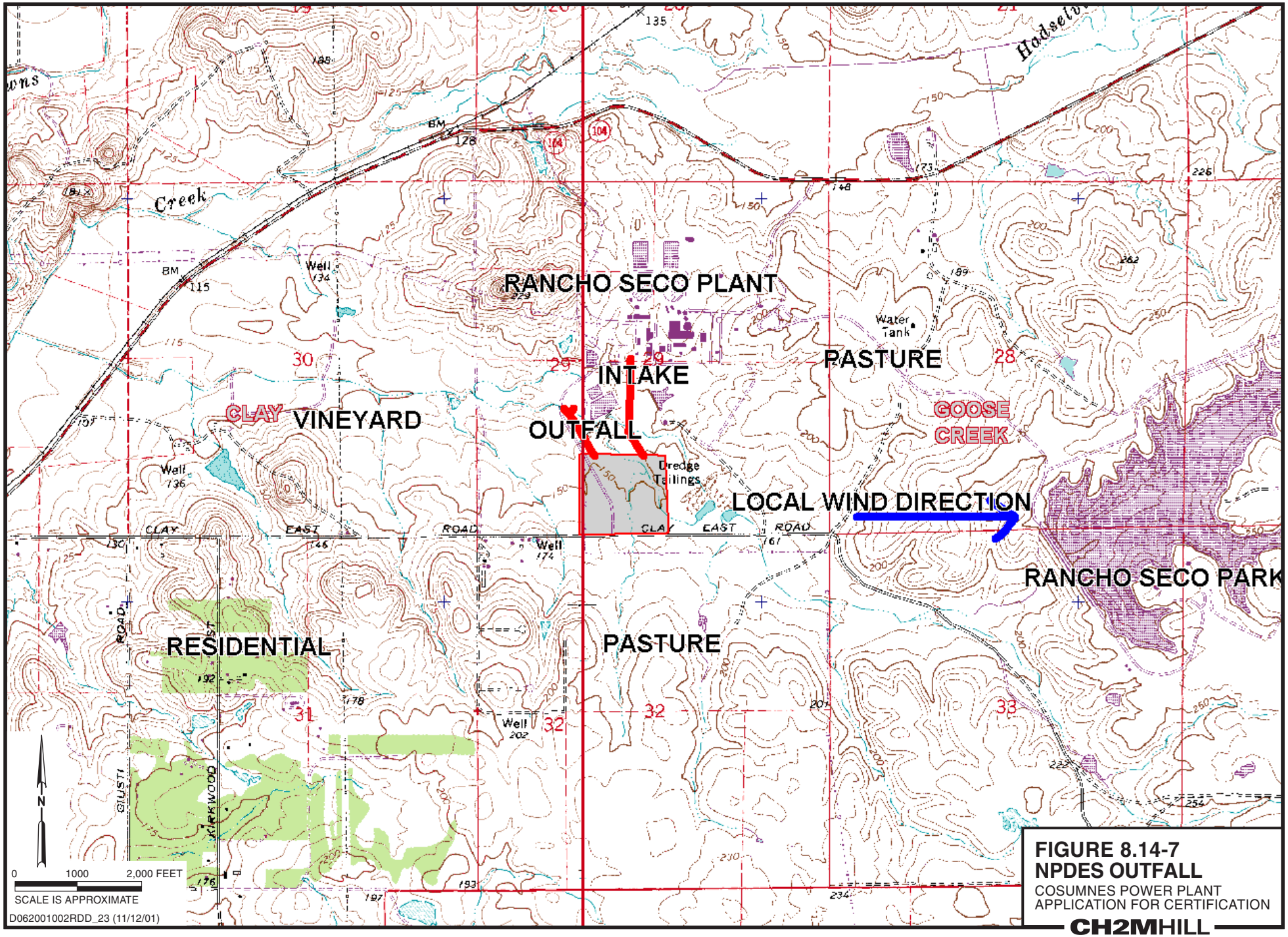

FIGURE 8.14-7
NPDES OUTFALL
COSUMNES POWER PLANT
APPLICATION FOR CERTIFICATION

CH2MHILL

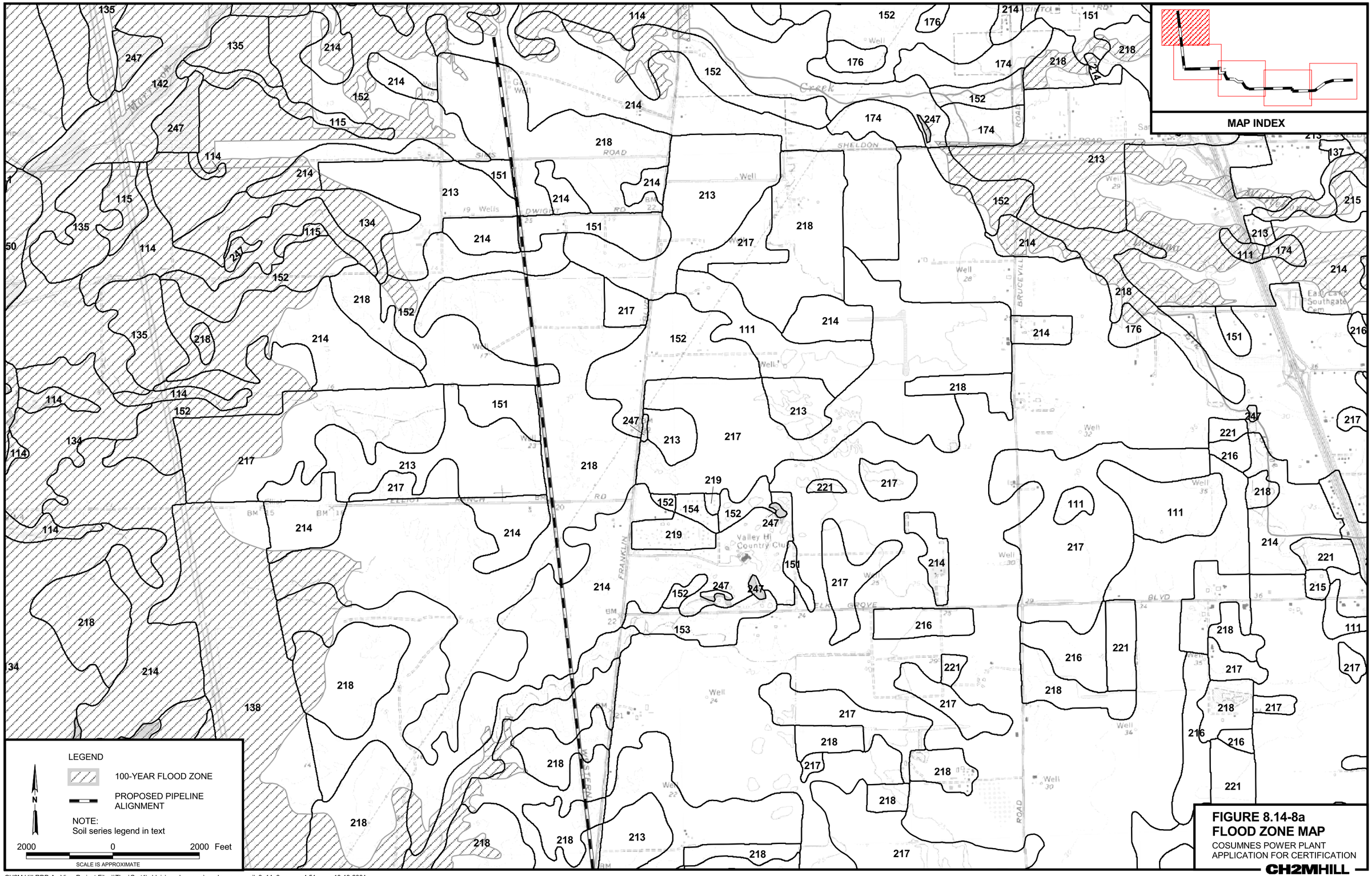

FIGURE 8.14-8a
FLOOD ZONE MAP
COSUMNES POWER PLANT
APPLICATION FOR CERTIFICATION

CH2MHILL

CH2M Hill RDD ArcView Project File \\Thor\Cart1\rddgis\rancho_seco\rancho_seco_soil_8_14_6apr.apr 4:51 p.m. 10-19-2001

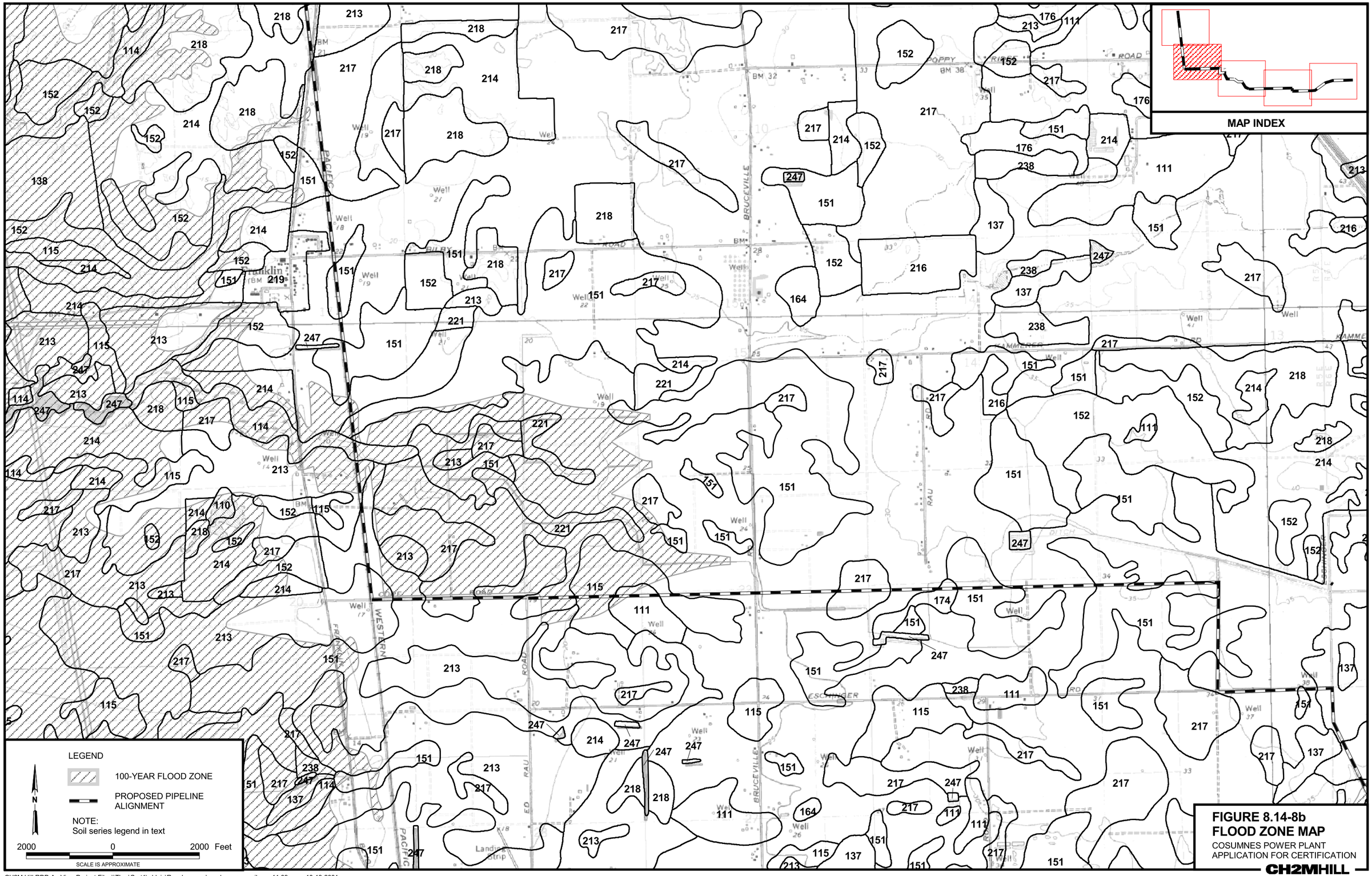

FIGURE 8.14-8b
FLOOD ZONE MAP
COSUMNES POWER PLANT
APPLICATION FOR CERTIFICATION
CH2MHILL

CH2M Hill RDD ArcView Project File \\Thor\Cart1\rddgis\Rancho_seco\rancho_seco_soil.apr 11:09 a.m. 10-19-2001

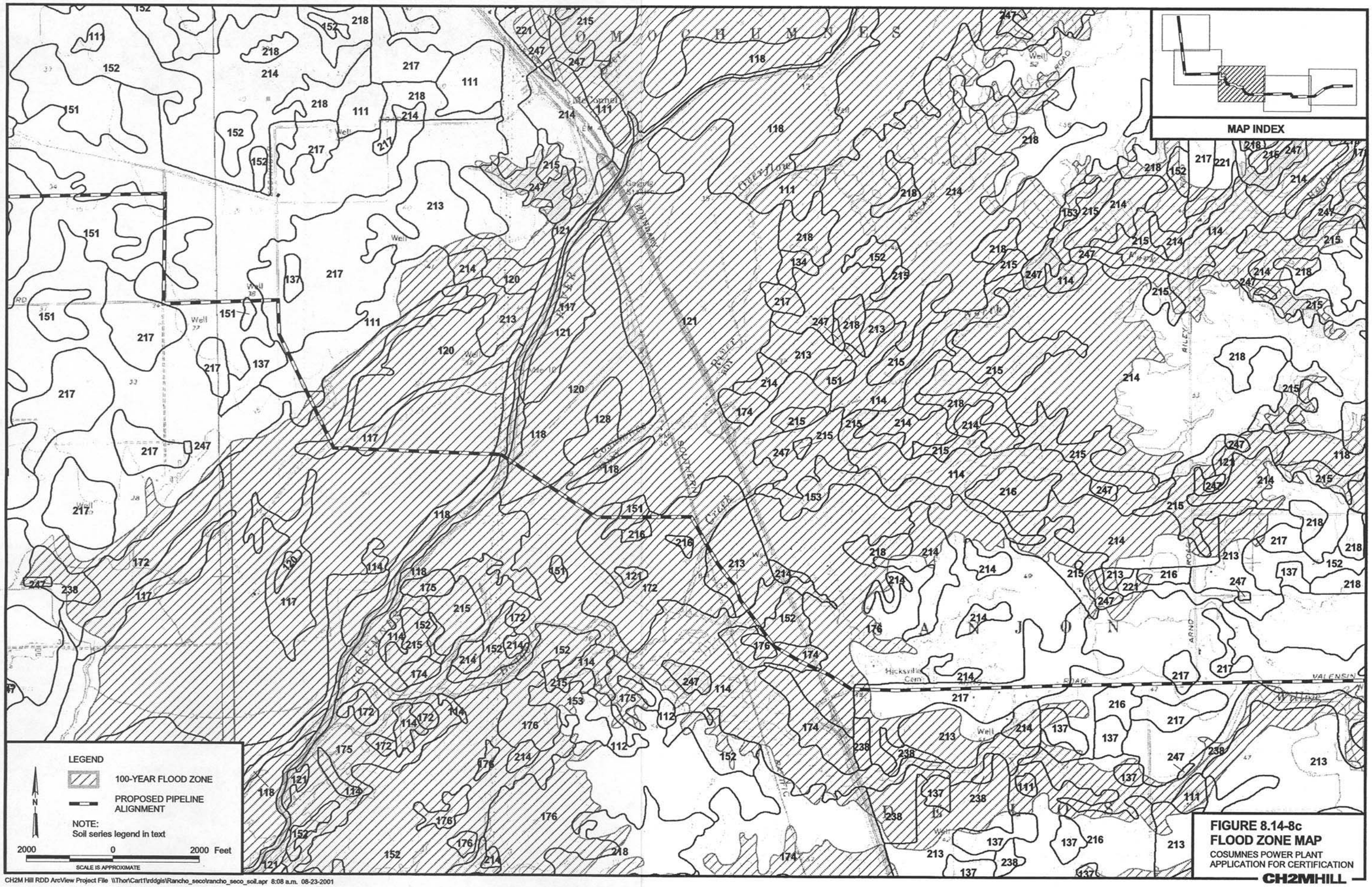

FIGURE 8.14-8c
FLOOD ZONE MAP
COSUMNES POWER PLANT
APPLICATION FOR CERTIFICATION

CH2MHILL

CH2M Hill RDD ArcView Project File \\Thor\Cart1\rddgis\Rancho_seco\rancho_seco_soil.apr 8:08 a.m. 08-23-2001

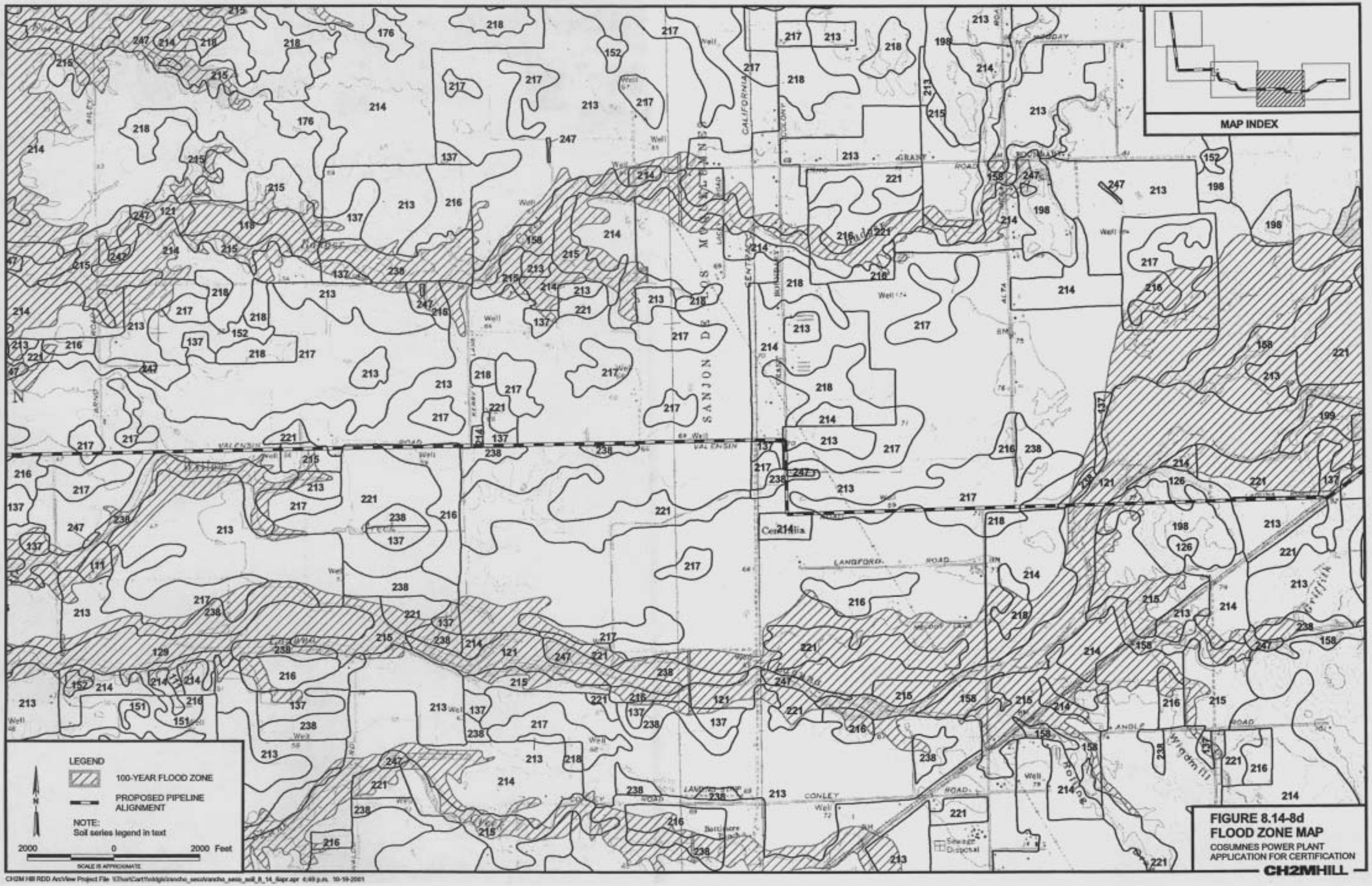

FIGURE 8.14-8d
FLOOD ZONE MAP
COSUMNES POWER PLANT
APPLICATION FOR CERTIFICATION
CH2MHILL

CH2M HILL RDD ArcView Project File: V:\hart\Cart1\wldgis\rancho_seco\rancho_seco_soil_8_14_6apr.apr 4:49 p.m. 10-19-2001

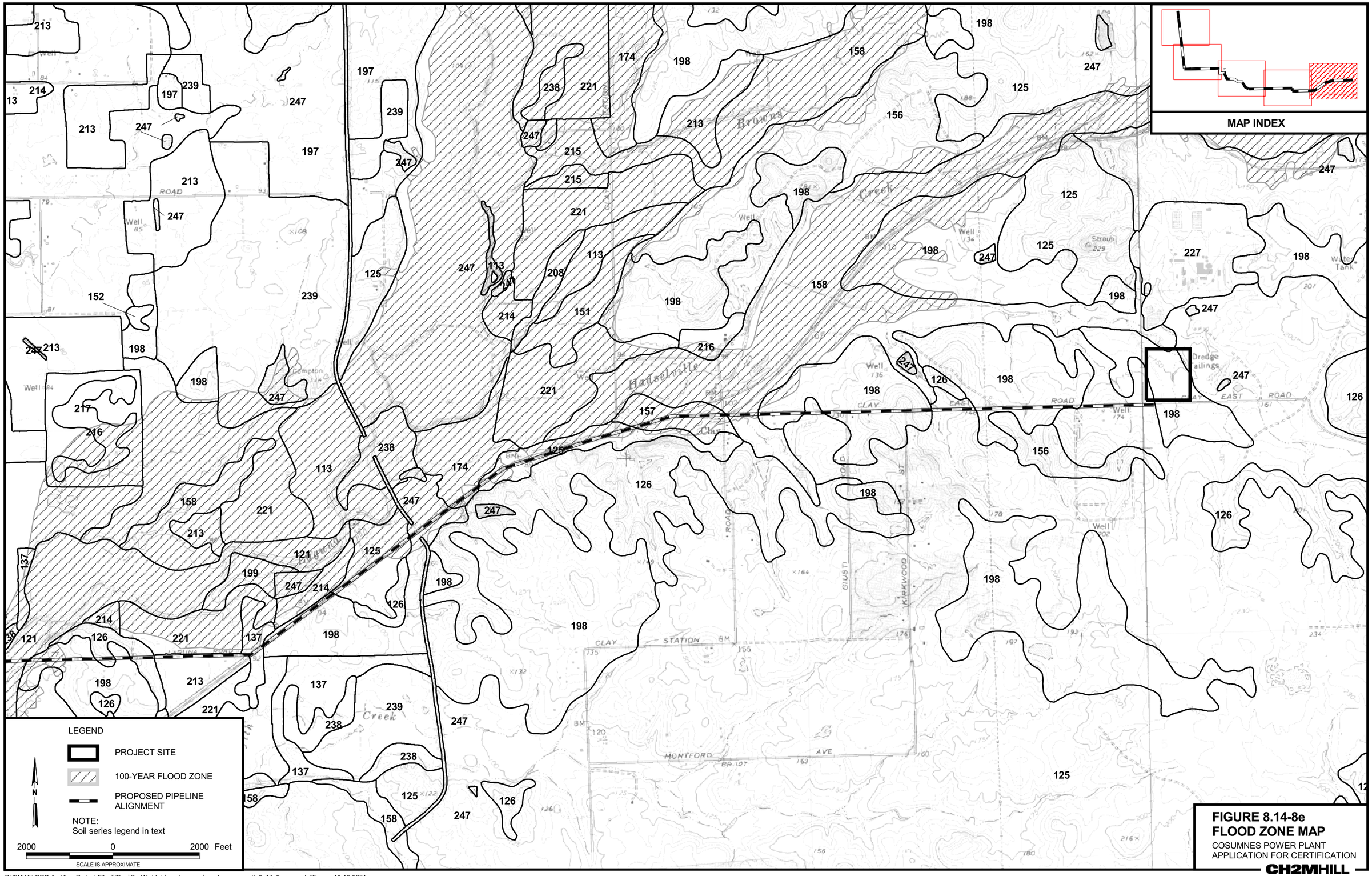

FIGURE 8.14-8e
FLOOD ZONE MAP
COSUMNES POWER PLANT
APPLICATION FOR CERTIFICATION

CH2MHILL

CH2M Hill RDD ArcView Project File \\Thor\Cart1\rddgis\rancho_seco\rancho_seco_soil_8_14_6apr.apr 4:46 p.m. 10-19-2001