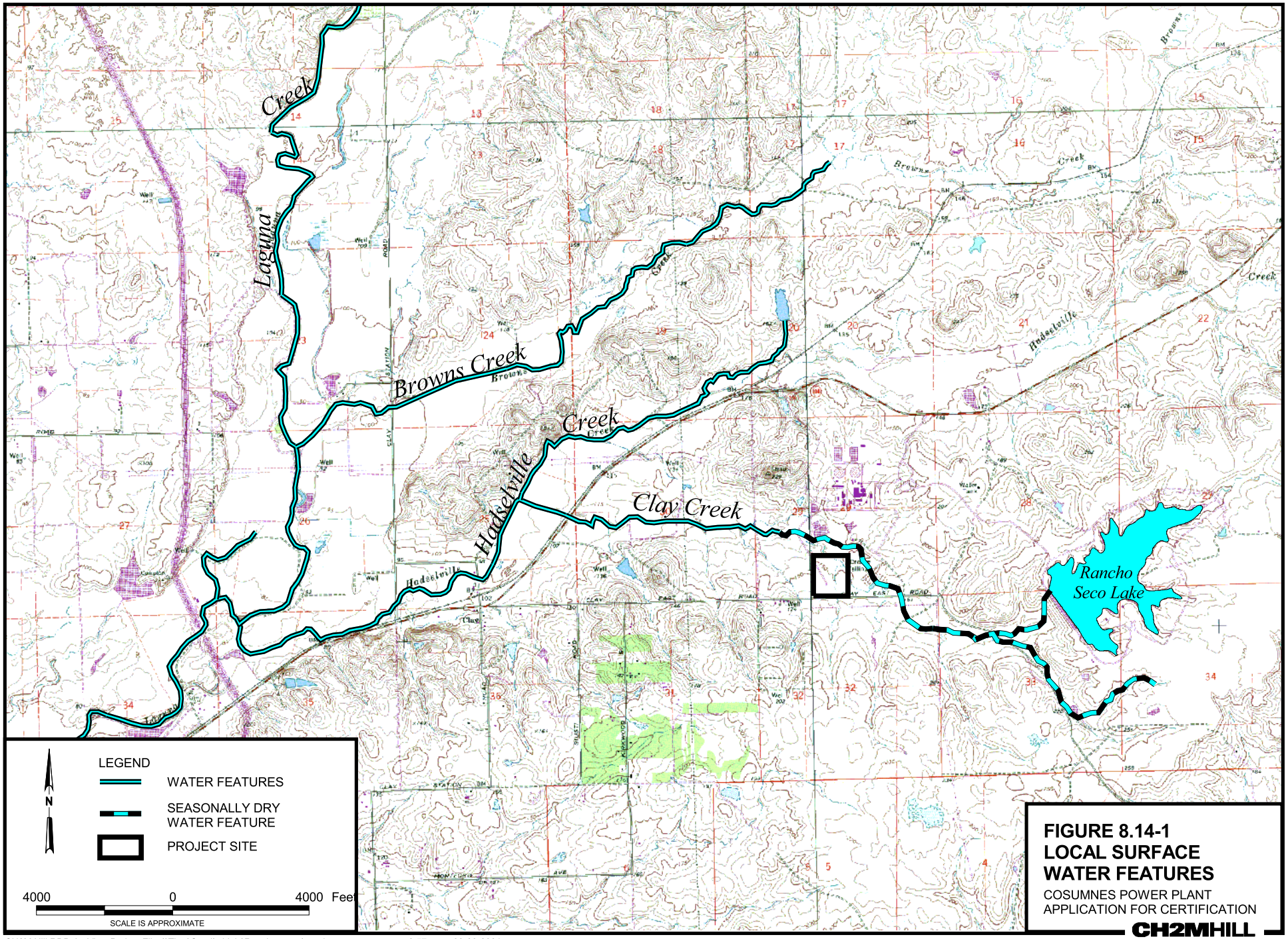

FIGURE 8.14-1
LOCAL SURFACE WATER FEATURES
COSUMNES POWER PLANT
APPLICATION FOR CERTIFICATION
CH2MHILL

CH2M Hill RDD ArcView Project File \\Thor\Cart1\rddgis\Rancho_seco\rancho_seco_water.apr 8:57 a.m. 08-23-2001

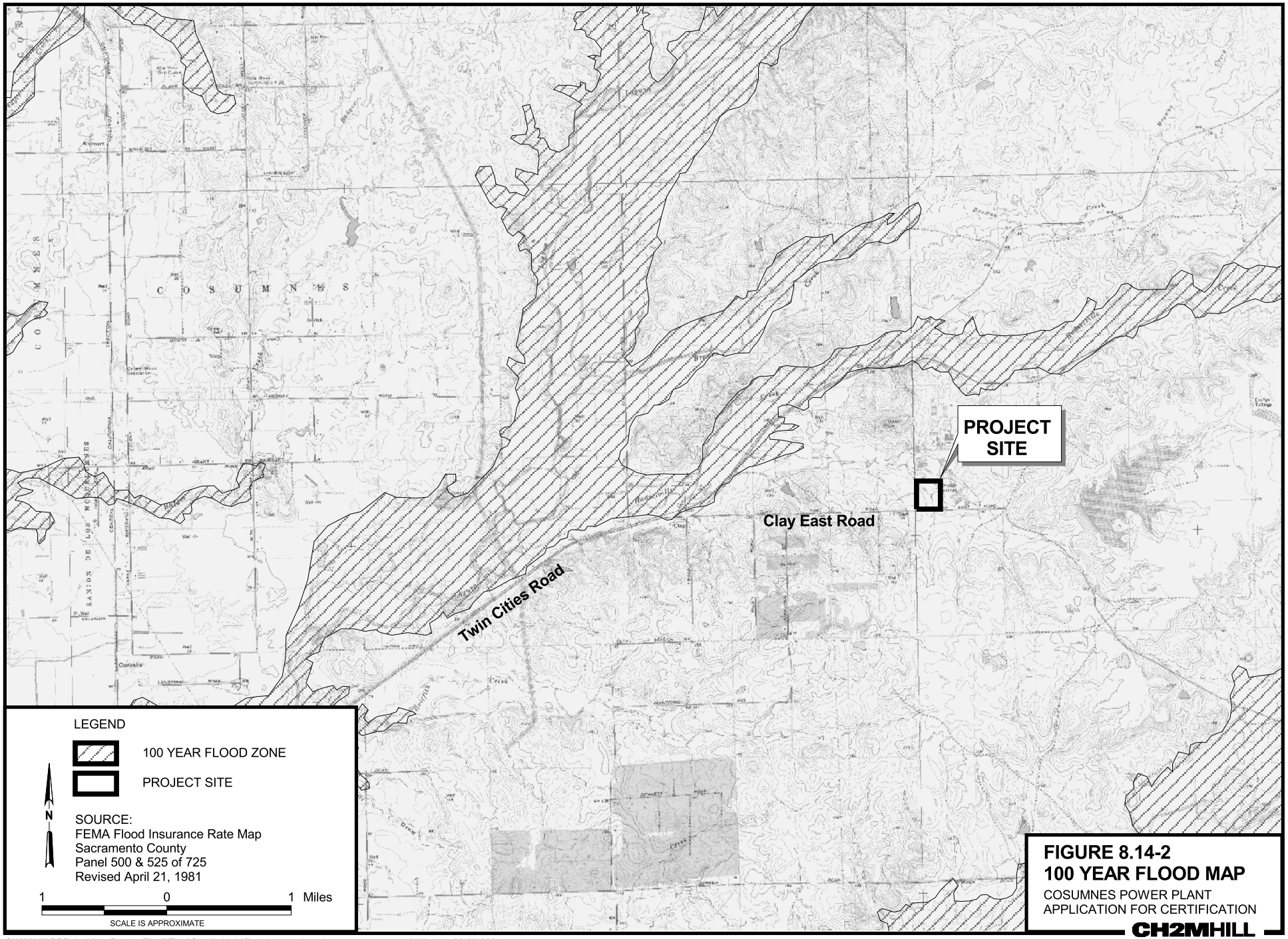

FIGURE 8.14-2
100 YEAR FLOOD MAP
COSUMNES POWER PLANT
APPLICATION FOR CERTIFICATION
CH2MHILL

CH2M Hill RDD ArcView Project File \\Thor\Cart1\rddgis\Rancho_seco\rancho_seco_water.apr 8:57 a.m. 08-23-2001

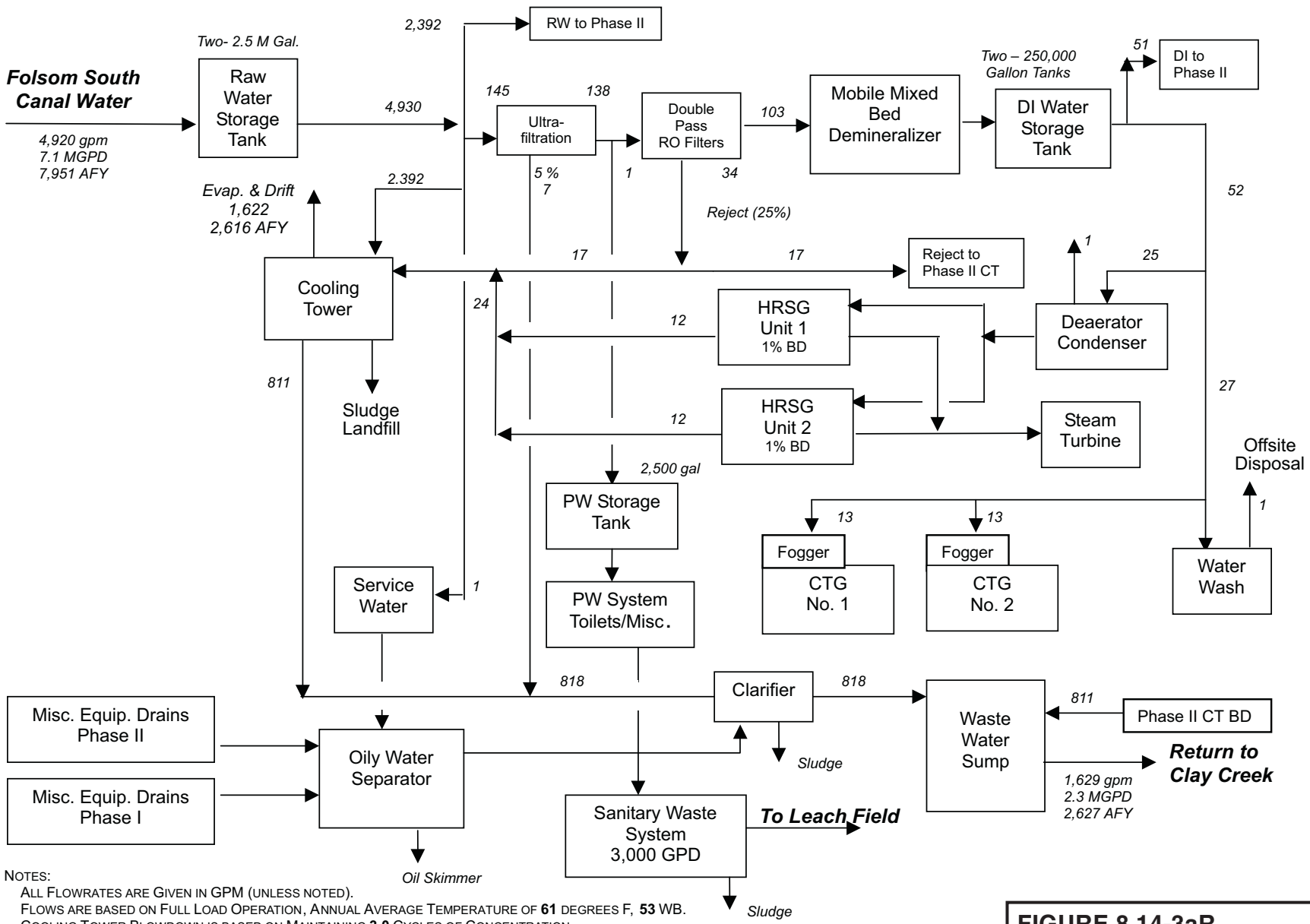

NOTES:
ALL FLOWRATES ARE GIVEN IN GPM (UNLESS NOTED).
FLOWS ARE BASED ON FULL LOAD OPERATION, ANNUAL AVERAGE TEMPERATURE OF **61** DEGREES F, **53** WB.
COOLING TOWER BLOWDOWN IS BASED ON MAINTAINING **3.0** CYCLES OF CONCENTRATION.
FLOWS ARE BASED ON FOLSOM SOUTH CANAL WATER CONSTITUENTS SPECIFIED.

SOURCE: PB POWER, INC.

FIGURE 8.14-3aR
PHASE I – ANNUAL AVERAGE WATER BALANCE DIAGRAM
COSUMNES POWER PLANT
APPLICATION FOR CERTIFICATION

CH2MHILL

D062001002RDD_10 (9/9/01)

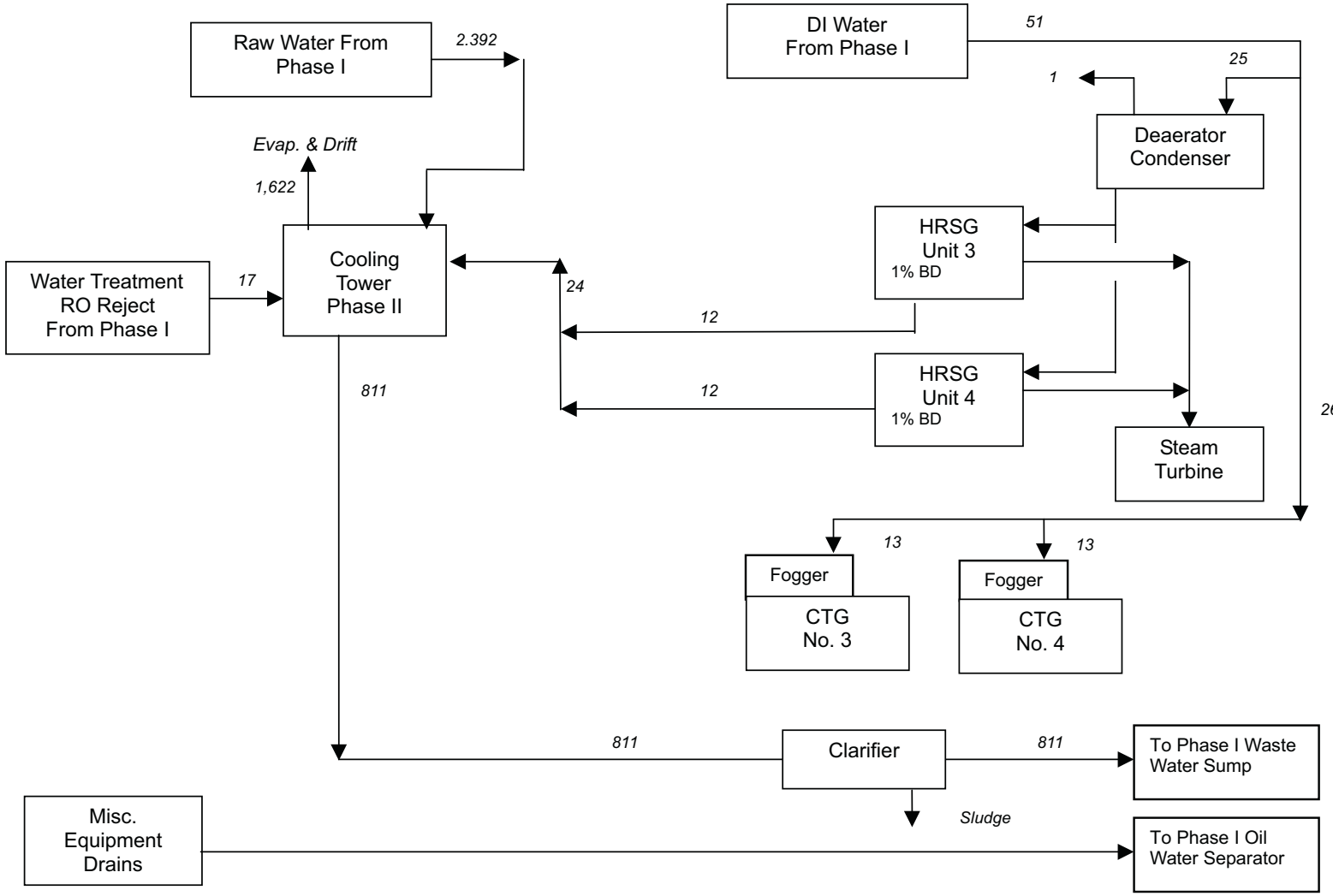

NOTES:
ALL FLOWRATES ARE GIVEN IN GPM.
FLOWS ARE BASED ON FULL LOAD OPERATION, ANNUAL AVERAGE TEMPERATURE OF **61** DEGREES F, **53** WB.
COOLING TOWER BLOWDOWN IS BASED ON MAINTAINING **3.0** CYCLES OF CONCENTRATION.
FLOWS ARE BASED ON FOLSOM SOUTH CANAL WATER CONSTITUENTS SPECIFIED.
SOURCE: PB POWER, INC.

FIGURE 8.14-3b
PHASE II – ANNUAL AVERAGE WATER BALANCE DIAGRAM
COSUMNES POWER PLANT
APPLICATION FOR CERTIFICATION

CH2MHILL

D062001002RDD_10 (9/4/01)

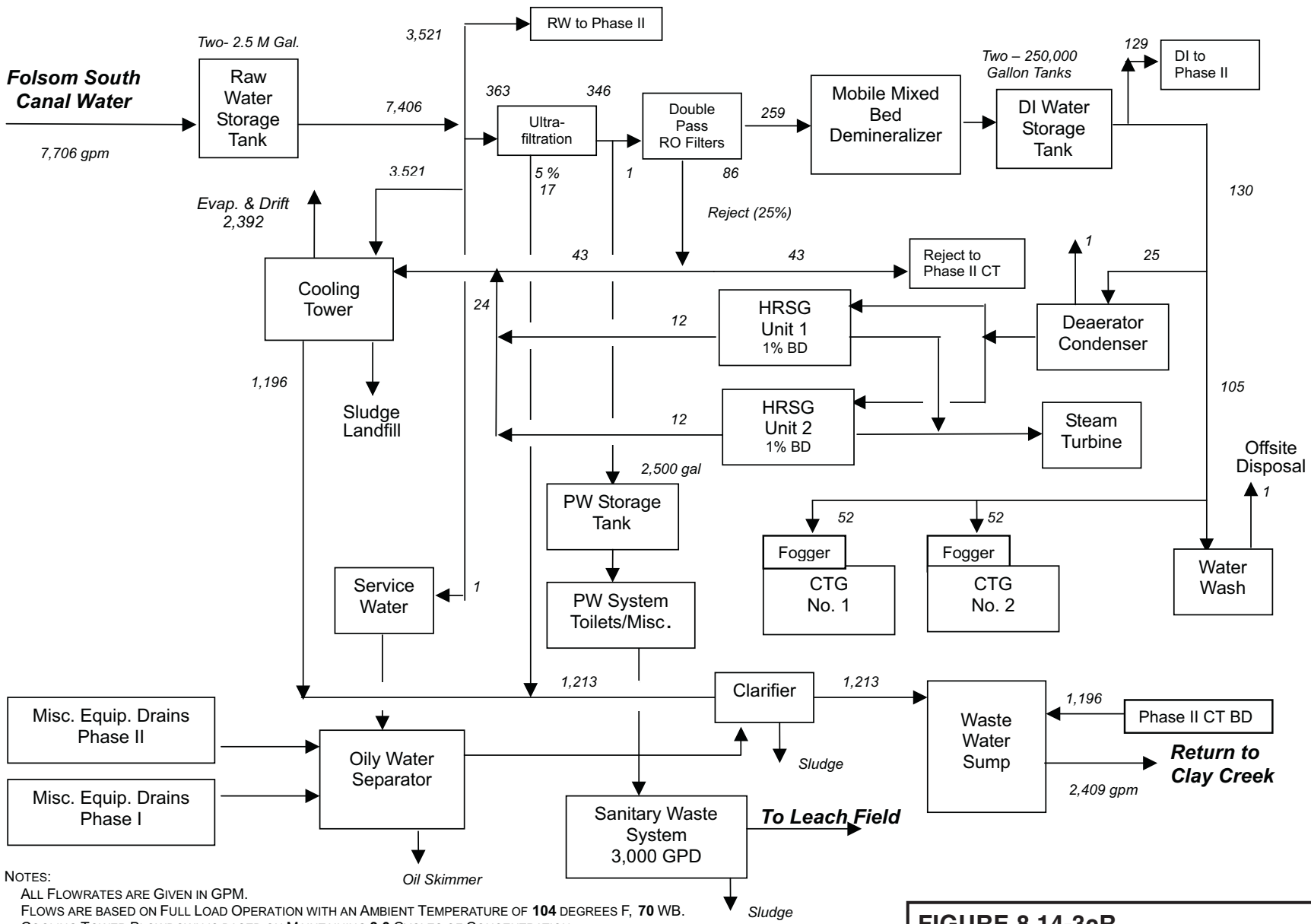

NOTES:
ALL FLOWRATES ARE GIVEN IN GPM.
FLOWS ARE BASED ON FULL LOAD OPERATION WITH AN AMBIENT TEMPERATURE OF **104** DEGREES F, **70** WB.
COOLING TOWER BLOWDOWN IS BASED ON MAINTAINING **3.0** CYCLES OF CONCENTRATION.
FLOWS ARE BASED ON FOLSOM SOUTH CANAL WATER CONSTITUENTS SPECIFIED.

SOURCE: PB POWER, INC.

FIGURE 8.14-3cR
PHASE I – 104 DEGREES FAHRENHEIT PEAK WATER BALANCE DIAGRAM
COSUMNES POWER PLANT
APPLICATION FOR CERTIFICATION

CH2MHILL

D062001002RDD_10 (9/9/01)

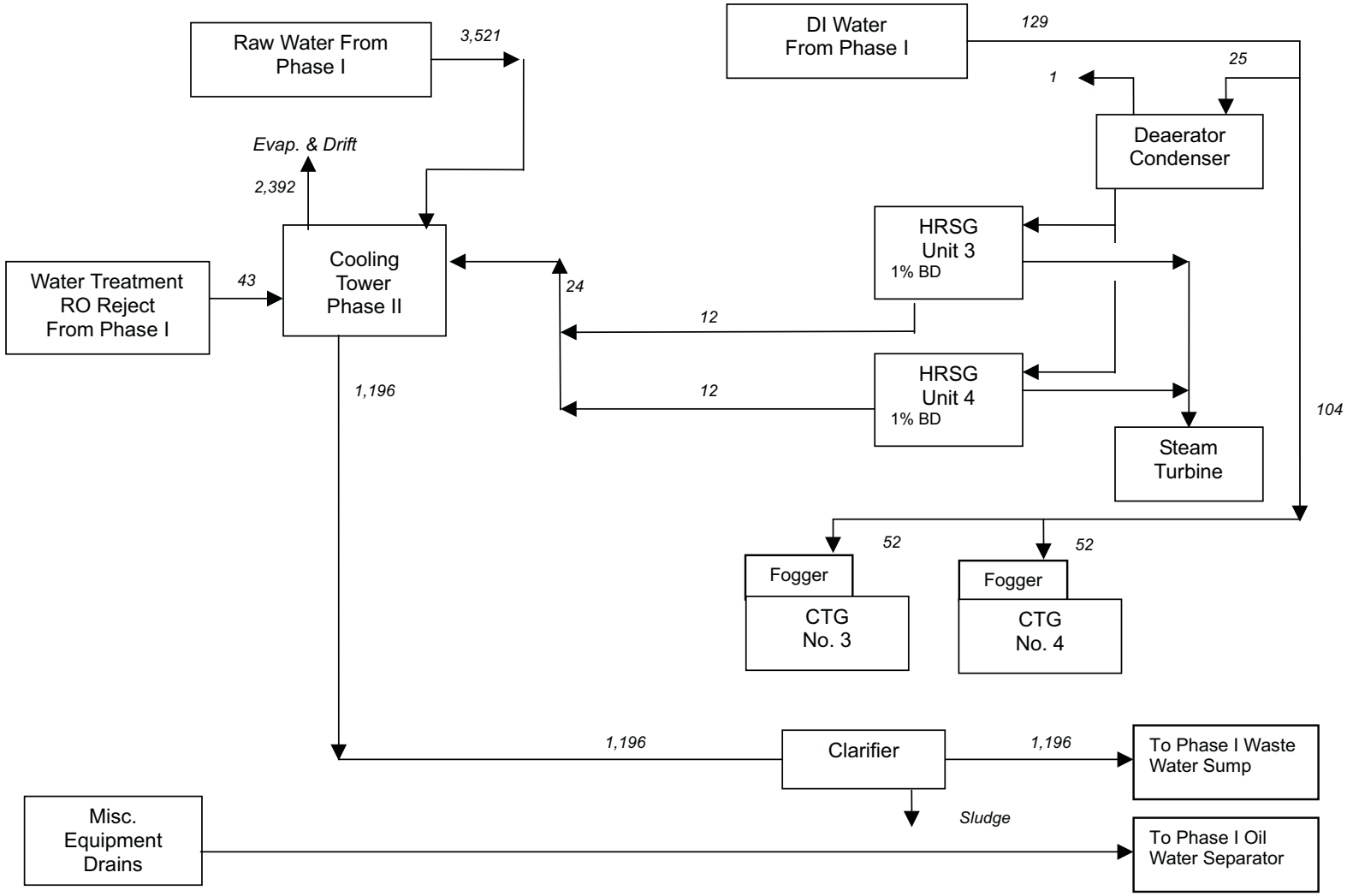

NOTES:
ALL FLOWRATES ARE GIVEN IN GPM.
FLOWS ARE BASED ON FULL LOAD OPERATION WITH AN AMBIENT TEMPERATURE OF **104** DEGREES F, **70** WB.
COOLING TOWER BLOWDOWN IS BASED ON MAINTAINING **3.0** CYCLES OF CONCENTRATION.
FLOWS ARE BASED ON FOLSOM SOUTH CANAL WATER CONSTITUENTS SPECIFIED.

SOURCE: PB POWER, INC.

FIGURE 8.14-3d
PHASE II – 104 DEGREES FAHRENHEIT PEAK WATER BALANCE DIAGRAM
COSUMNES POWER PLANT
APPLICATION FOR CERTIFICATION

CH2MHILL

D062001002RDD_10 (9/4/01)

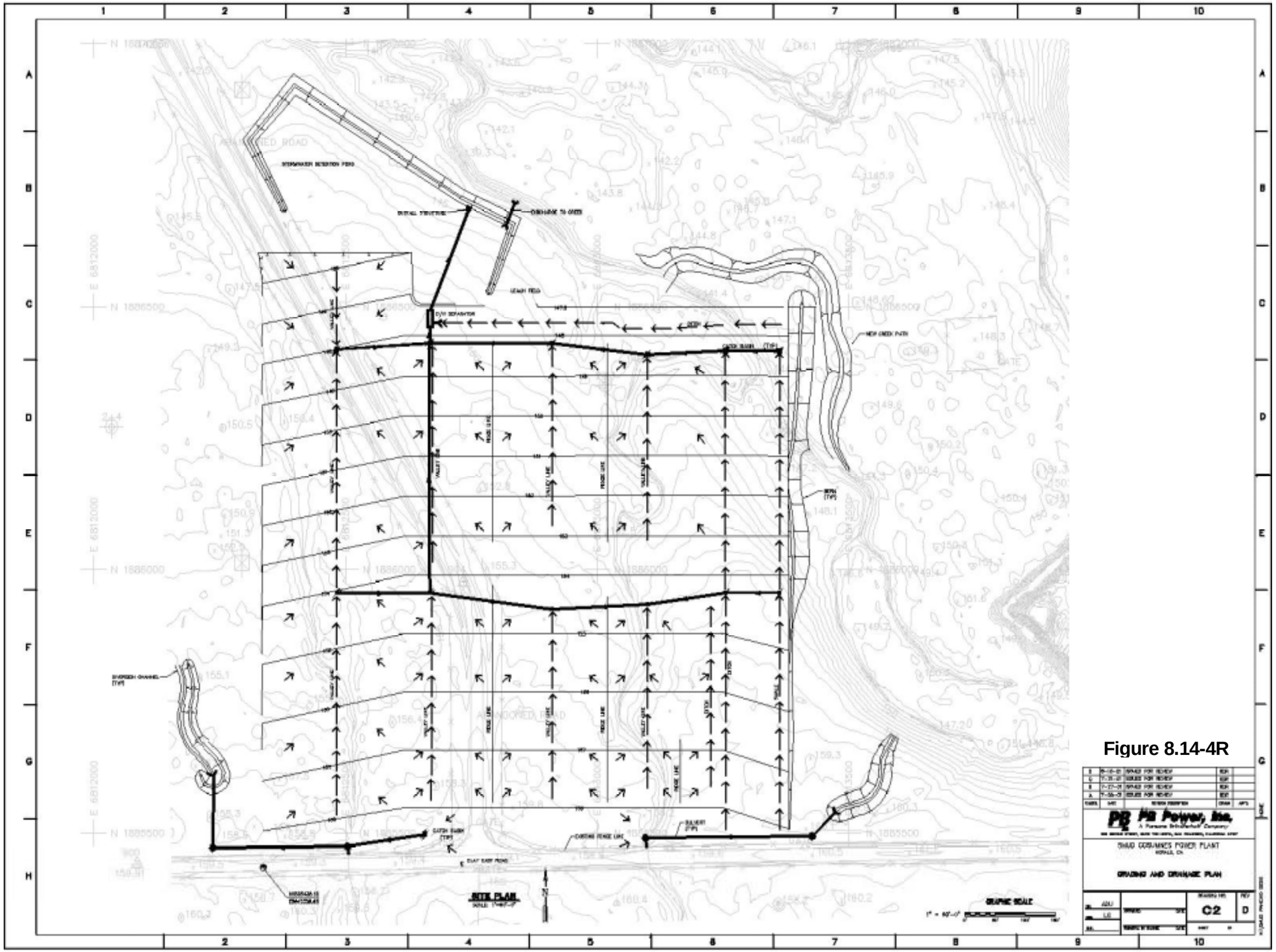

Figure 8.14-4R

LEGEND

PROJECT SITE

N

200 0 200 Feet

SCALE IS APPROXIMATE

FIGURE 8.14-5
SURFACE WATERS POTENTIALLY AFFECTED BY THE PROJECT

COSUMNES POWER PLANT
APPLICATION FOR
CERTIFICATION

CH2MHILL

CH2M Hill RDD ArcView Project File \\Thor\Cart1\rddgis\Rancho_seco\rancho_seco_water.apr 1:36 p.m. 10-23-2001

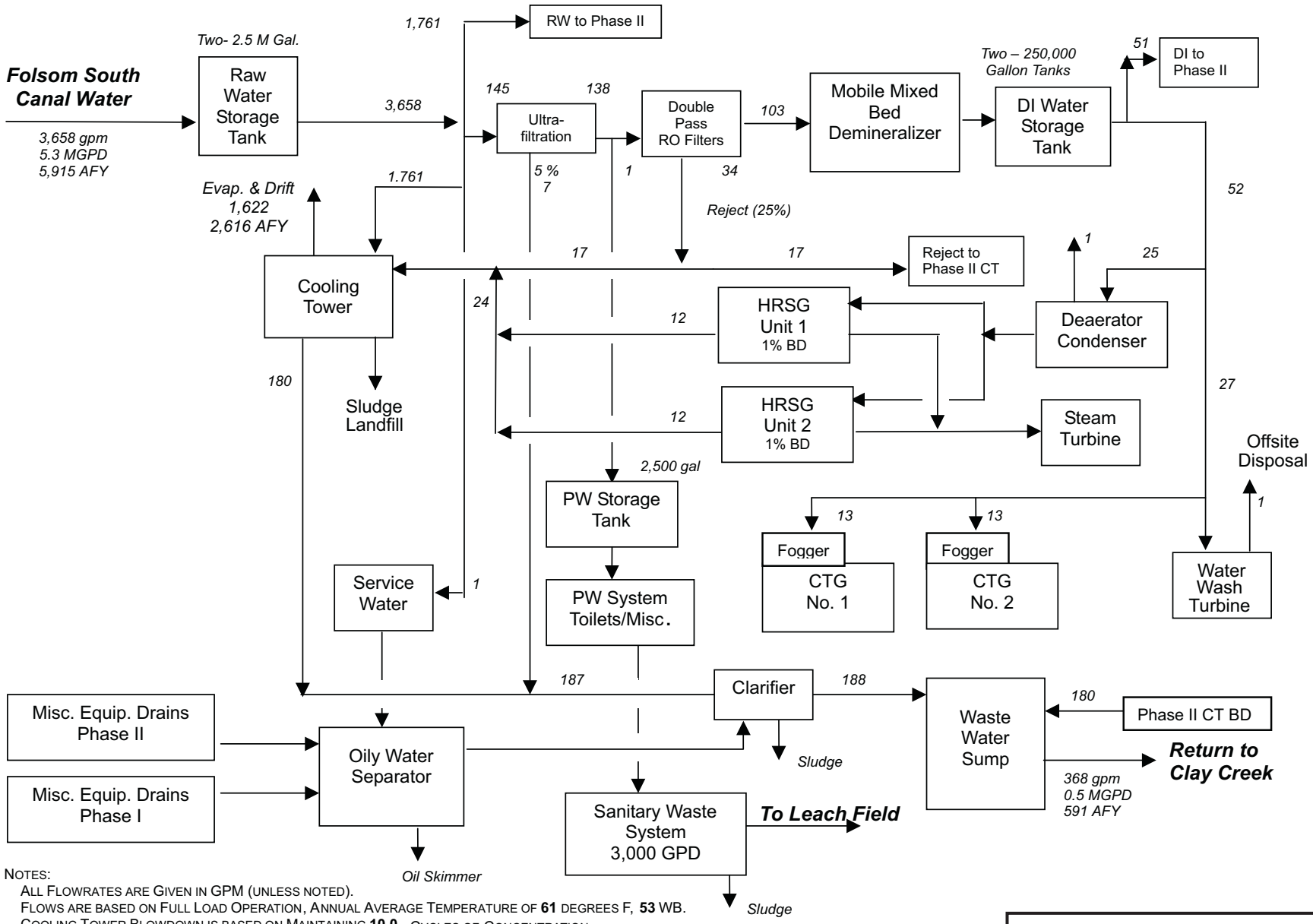

NOTES:
ALL FLOWRATES ARE GIVEN IN GPM (UNLESS NOTED).
FLOWS ARE BASED ON FULL LOAD OPERATION, ANNUAL AVERAGE TEMPERATURE OF **61** DEGREES F, **53** WB.
COOLING TOWER BLOWDOWN IS BASED ON MAINTAINING **10.0** CYCLES OF CONCENTRATION
FLOWS ARE BASED ON FOLSOM SOUTH CANAL WATER CONSTITUENTS SPECIFIED.

SOURCE: PB POWER, INC.

FIGURE 8.14-6a
PHASE I – ANNUAL AVERAGE WATER BALANCE DIAGRAM
COSUMNES POWER PLANT
APPLICATION FOR CERTIFICATION

CH2MHILL

D062001002RDD_090 (11/12/01)

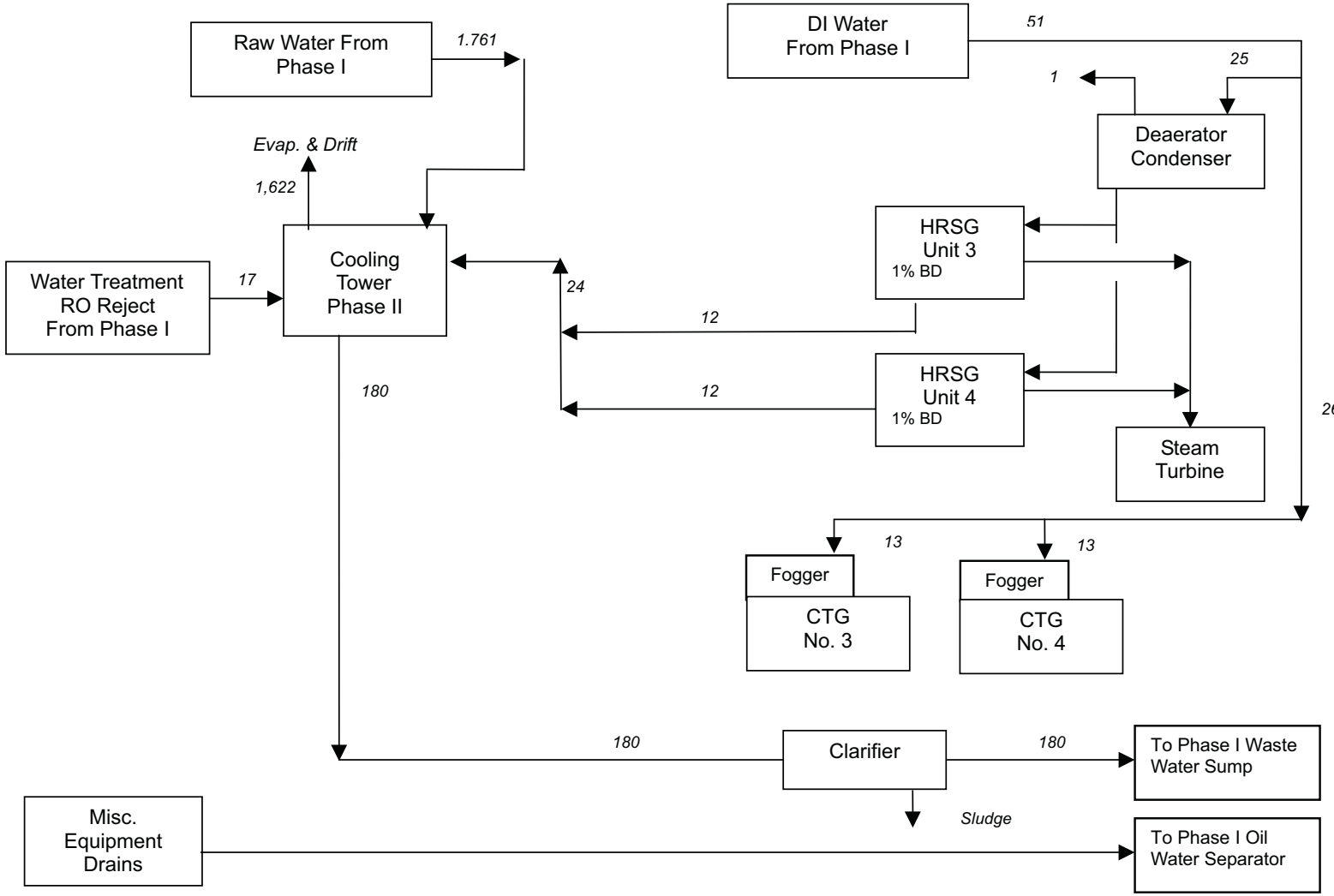

NOTES:
ALL FLOWRATES ARE GIVEN IN GPM.
FLOWS ARE BASED ON FULL LOAD OPERATION, ANNUAL AVERAGE TEMPERATURE OF **61** DEGREES F, **53** WB.
COOLING TOWER BLOWDOWN IS BASED ON MAINTAINING **10.0** CYCLES OF CONCENTRATION
FLOWS ARE BASED ON FOLSOM SOUTH CANAL WATER CONSTITUENTS SPECIFIED.

SOURCE: PB POWER, INC.

FIGURE 8.14-6b
PHASE II – ANNUAL AVERAGE WATER BALANCE DIAGRAM
COSUMNES POWER PLANT
APPLICATION FOR CERTIFICATION

CH2MHILL

D062001002RDD_090 (11/12/01)

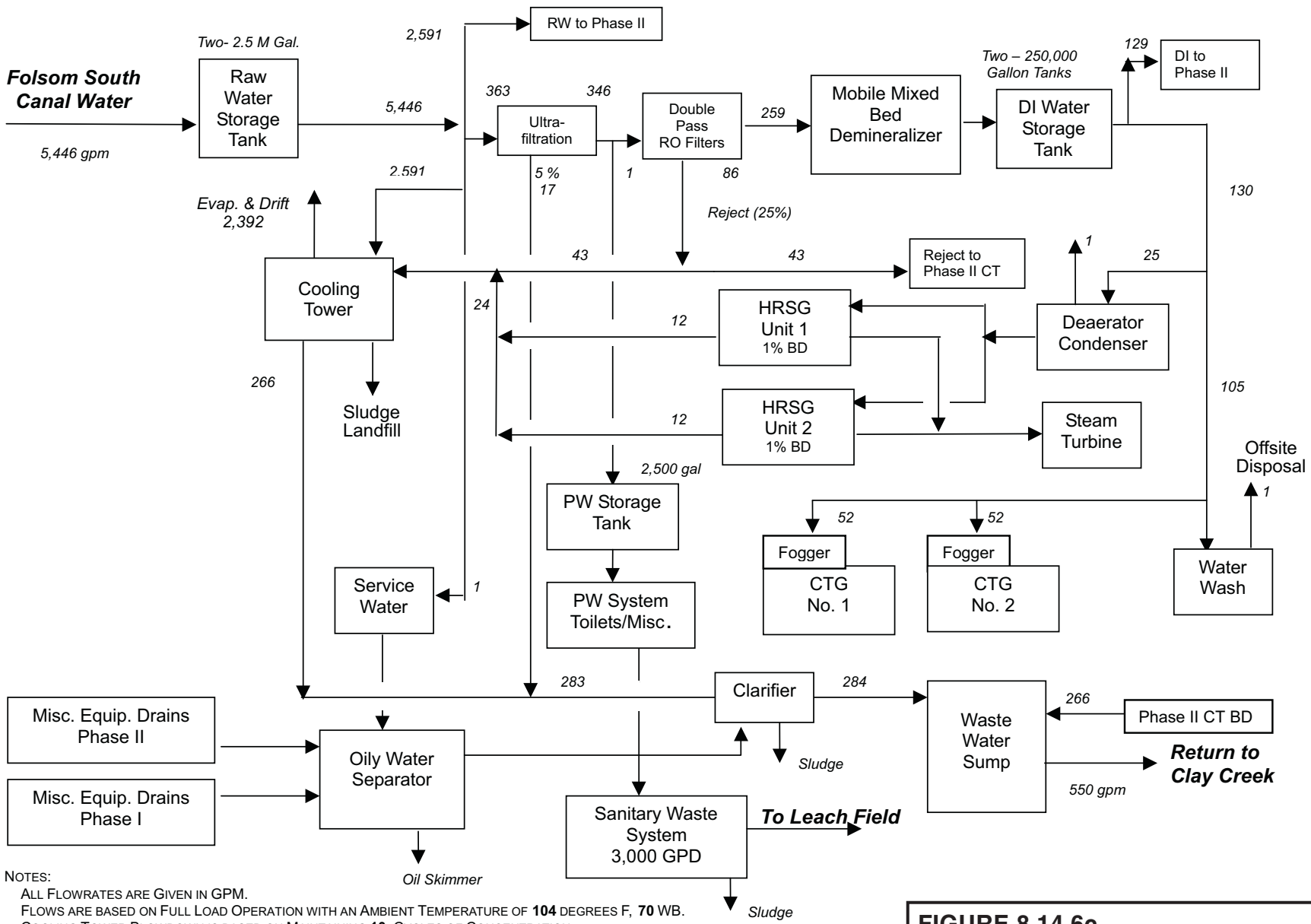

NOTES:
ALL FLOWRATES ARE GIVEN IN GPM.
FLOWS ARE BASED ON FULL LOAD OPERATION WITH AN AMBIENT TEMPERATURE OF **104** DEGREES F, **70** WB.
COOLING TOWER BLOWDOWN IS BASED ON MAINTAINING **10** CYCLES OF CONCENTRATION.
FLOWS ARE BASED ON FOLSOM SOUTH CANAL WATER CONSTITUENTS SPECIFIED.

SOURCE: PB POWER, INC.

FIGURE 8.14.6c
PHASE I – 104 DEGREES FAHRENHEIT PEAK WATER BALANCE DIAGRAM
COSUMNES POWER PLANT
APPLICATION FOR CERTIFICATION

D062001002RDD_100 (11/12/01)

CH2MHILL

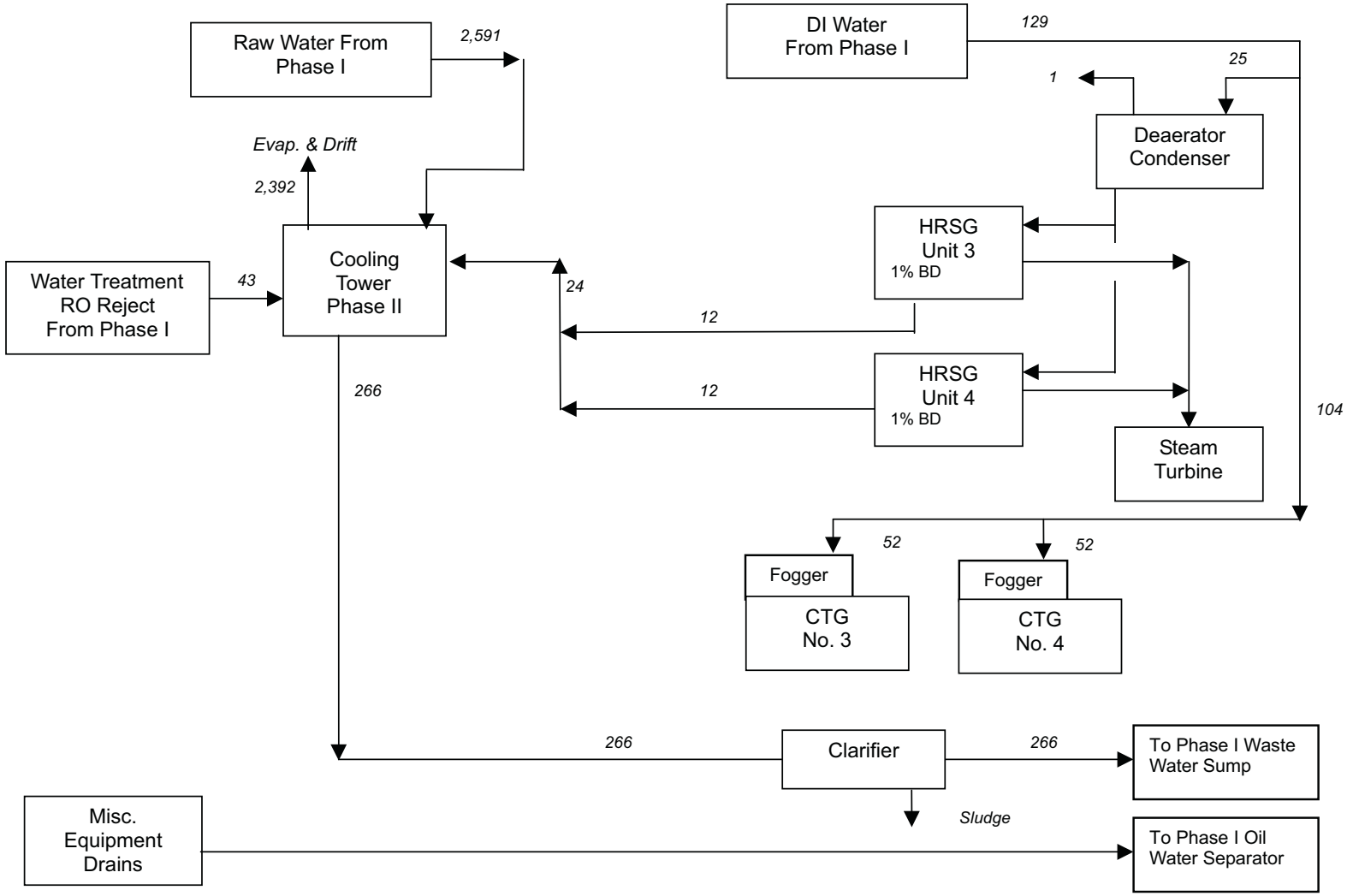

NOTES:
ALL FLOWRATES ARE GIVEN IN GPM.
FLOWS ARE BASED ON FULL LOAD OPERATION WITH AN AMBIENT TEMPERATURE OF **104** DEGREES F, **70** WB.
COOLING TOWER BLOWDOWN IS BASED ON MAINTAINING **10** CYCLES OF CONCENTRATION.
FLOWS ARE BASED ON FOLSOM SOUTH CANAL WATER CONSTITUENTS SPECIFIED.

SOURCE: PB POWER, INC.

FIGURE 8.14-6d
PHASE II – 104 DEGREES FAHRENHEIT PEAK WATER BALANCE DIAGRAM
COSUMNES POWER PLANT
APPLICATION FOR CERTIFICATION

D062001002RDD_100 (11/12/01)

CH2MHILL

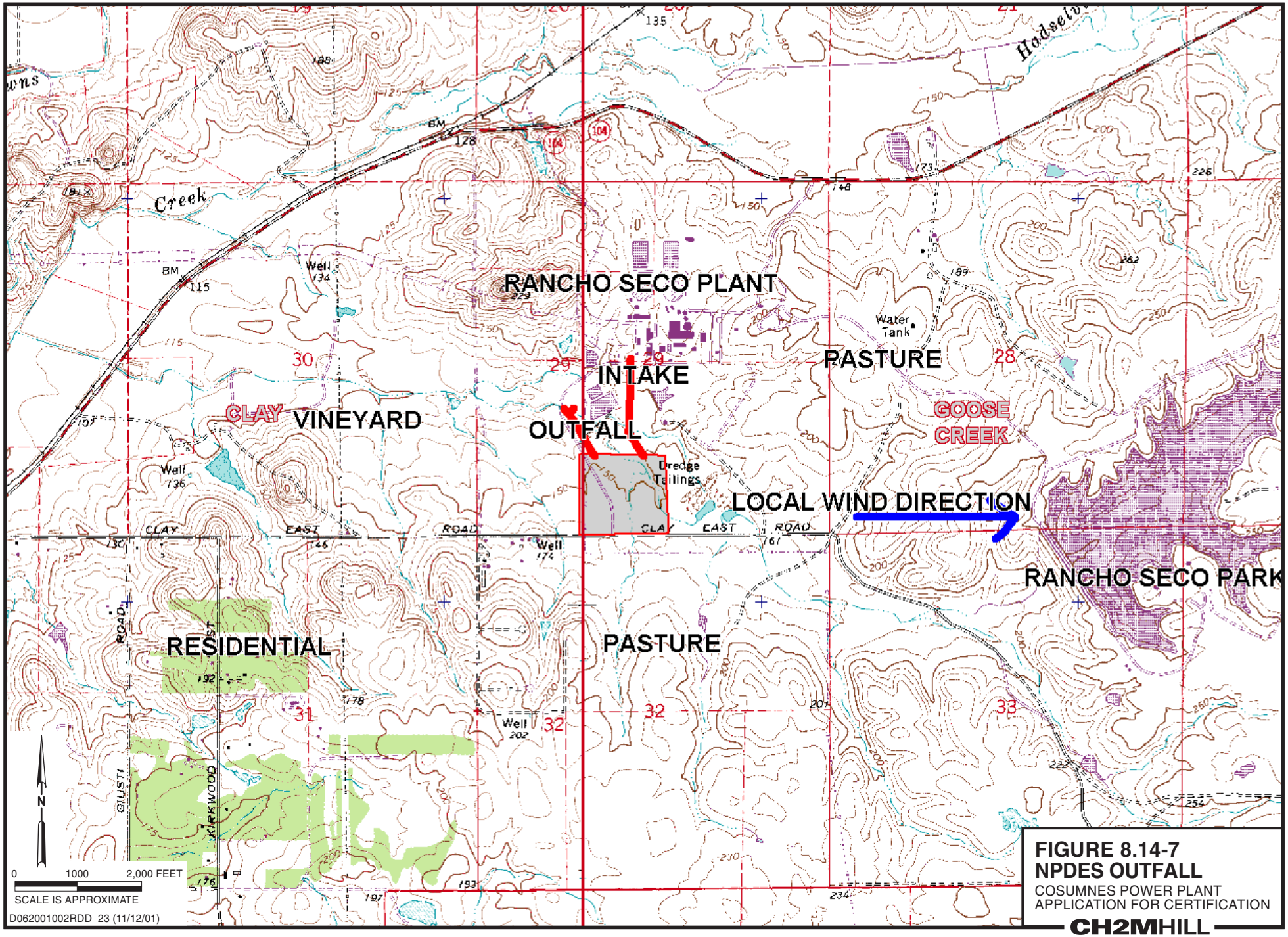

FIGURE 8.14-7
NPDES OUTFALL
COSUMNES POWER PLANT
APPLICATION FOR CERTIFICATION

CH2MHILL

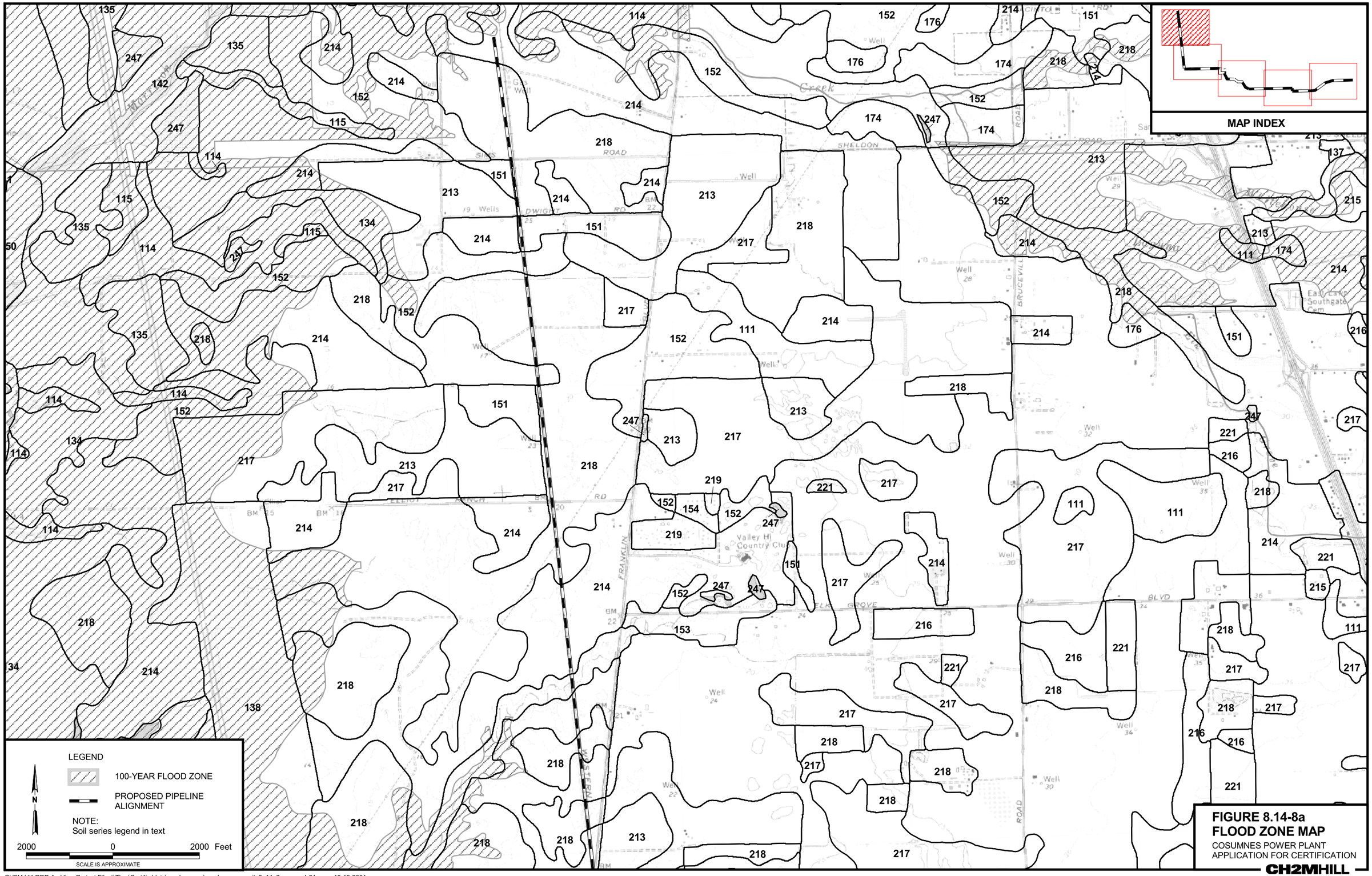

FIGURE 8.14-8a
FLOOD ZONE MAP
COSUMNES POWER PLANT
APPLICATION FOR CERTIFICATION

CH2MHILL

CH2M Hill RDD ArcView Project File \\Thor\Cart1\rddgis\rancho_seco\rancho_seco_soil_8_14_6apr.apr 4:51 p.m. 10-19-2001

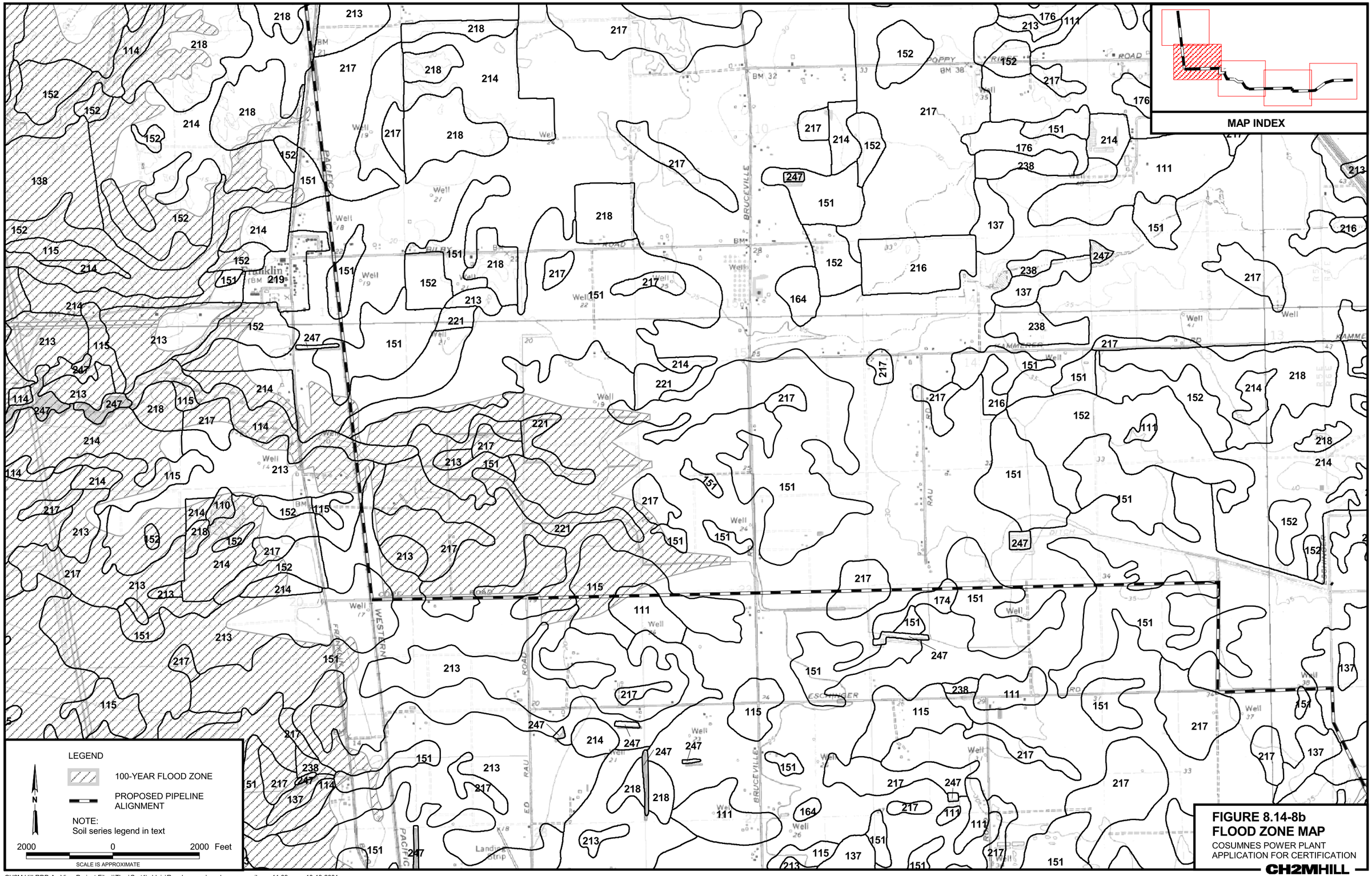

FIGURE 8.14-8b
FLOOD ZONE MAP
COSUMNES POWER PLANT
APPLICATION FOR CERTIFICATION
CH2MHILL

CH2M Hill RDD ArcView Project File \\Thor\Cart1\rddgis\Rancho_seco\rancho_seco_soil.apr 11:09 a.m. 10-19-2001

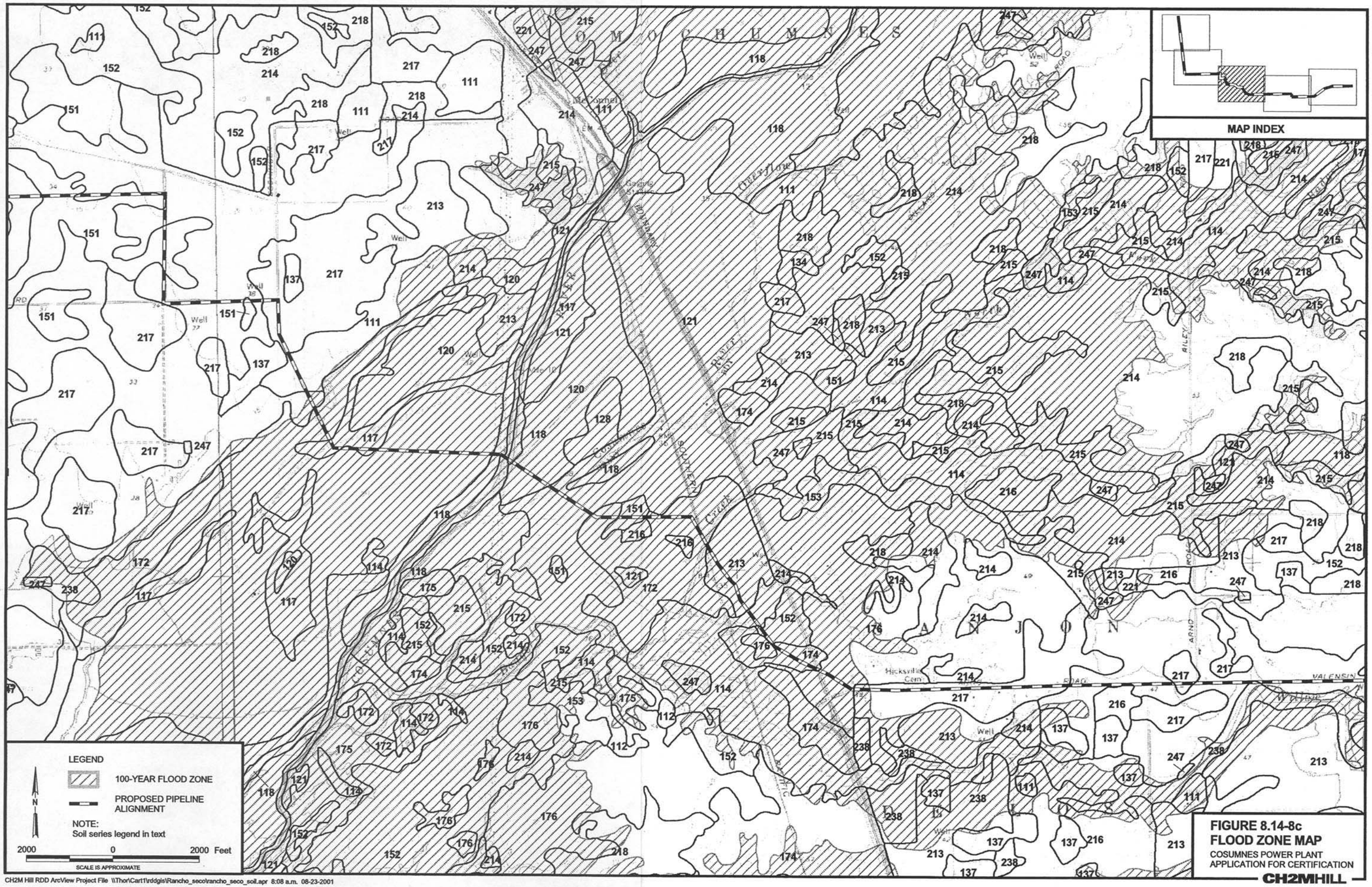

FIGURE 8.14-8c
FLOOD ZONE MAP
COSUMNES POWER PLANT
APPLICATION FOR CERTIFICATION

CH2MHILL

CH2M Hill RDD ArcView Project File \\Thor\Cart1\rddgis\Rancho_seco\rancho_seco_soil.apr 8:08 a.m. 08-23-2001

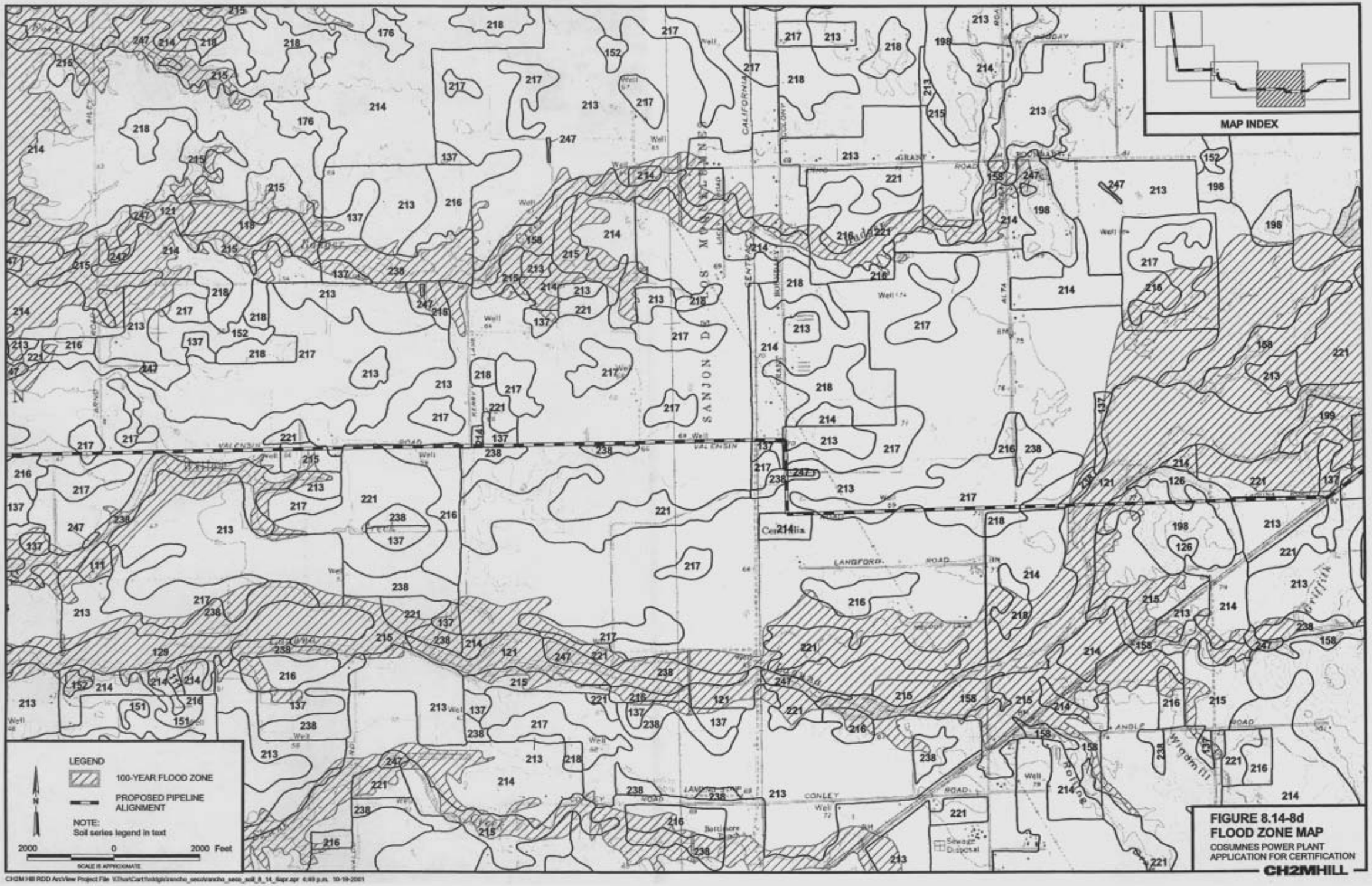

FIGURE 8.14-8d
FLOOD ZONE MAP
COSUMNES POWER PLANT
APPLICATION FOR CERTIFICATION
CH2MHILL

CH2M HILL RDD ArcView Project File \\Thor\Cart1\ddgis\rancho_seco\rancho_seco_soil_8_14_6apr.apr 4:49 p.m. 10-19-2001

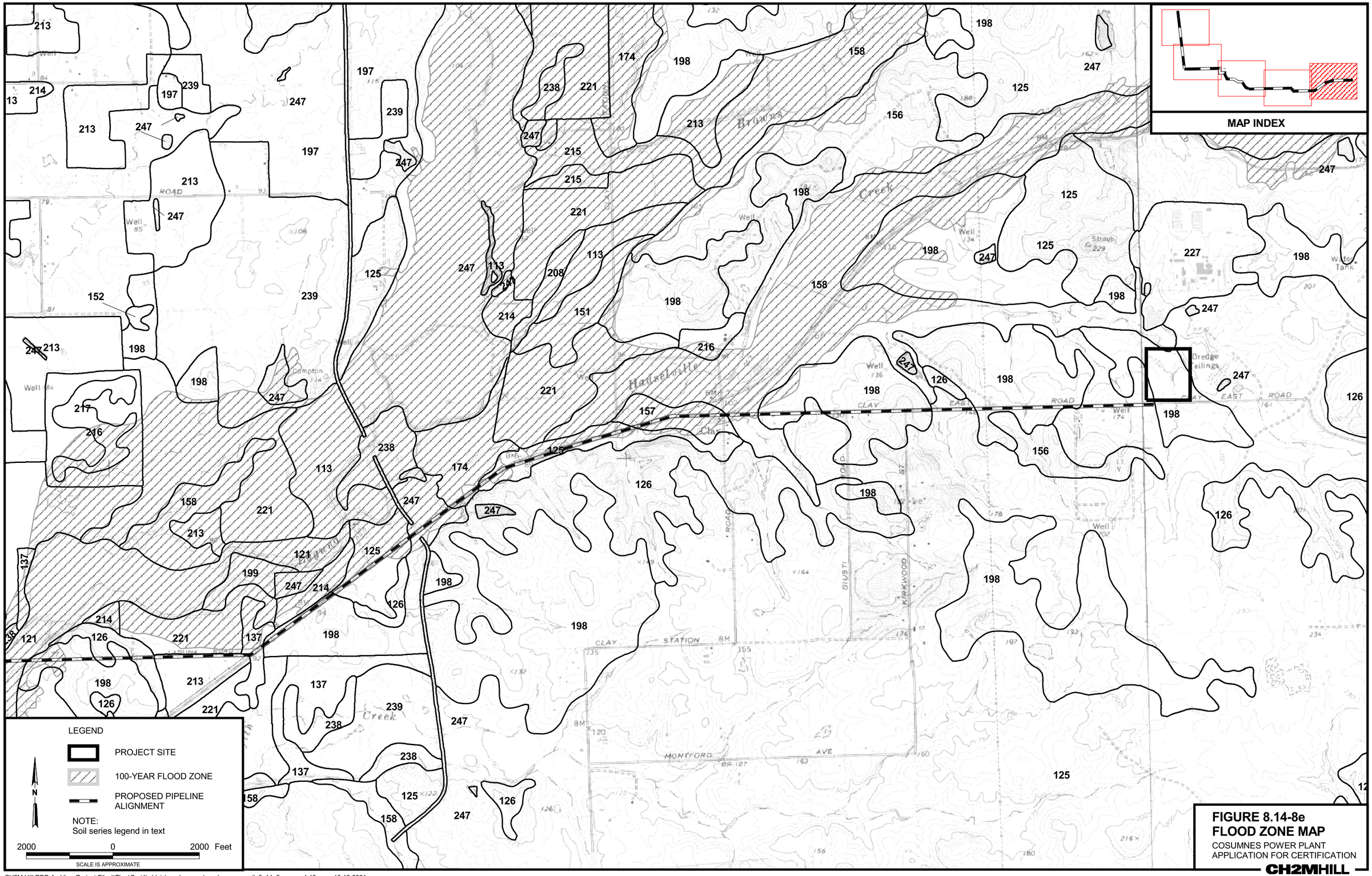

FIGURE 8.14-8e
FLOOD ZONE MAP
COSUMNES POWER PLANT
APPLICATION FOR CERTIFICATION

CH2MHILL

CH2M Hill RDD ArcView Project File \\Thor\Cart1\rddgis\rancho_seco\rancho_seco_soil_8_14_6apr.apr 4:46 p.m. 10-19-2001