APPENDIX 5A

Cosumnes Power Plant Transmission System Impact Study

Cosumnes Power Plant
Transmission System Impact Study

Sacramento Municipal Utility District
Revised October 16, 2001

Contents

Subject	Page
1. Study Objective	1
2. Project Description	1
3. Summary of Study Results	1
4. Study Description	2
5. Voltage Support Studies	6
6. Summer System Normal Studies	7
7. Summer Single Contingency Studies	9
8. Summer Double Contingency Studies	11
9. Summer Thermal Study Conclusion	12
10. Spring System Normal Studies	12
11. Spring Single Contingency Studies	13
12. Spring Double Contingency Studies	14

PV Curves	Appendix A
Flow Comparison Tables	Appendix B
TransferLimit Program Summaries	Appendix C
Flow Diagrams	Appendix D
Sensitivity Flow Diagrams	Appendix E

Cosumnes Power Plant Transmission System Impact Study

1. Study Objective

Determine the impacts on the surrounding electrical system of a new 1000 MW Cosumnes Power Plant project located at Rancho Seco.

2. Project Description

The Cosumnes Power Plant project is proposed to be combined cycle gas and steam turbine generation with heat recovery steam generator located approximately ¼ mile from the existing 230 kV switchyard at Rancho Seco. Rancho Seco, in the south-east portion of the Sacramento Municipal Utility District (SMUD) service area, is the site of the 1000 MW Rancho Seco Nuclear Generation Plant permanently removed from service in 1989.

Specific generation equipment has not been selected at this time, but the intent is to construct a 500 MW plant that will be on-line by the first quarter of 2005 and a second 500 MW plant that will be on-line within another two years.

3. Summary of Study Results

Results of both TransferLimit studies and PV analysis indicate that additional generation at the Cosumnes Power Plant will significantly improve the SMUD/Roseville area load handling capability from both the thermal perspective and voltage support perspective.

For the heavy summer conditions studied, no significant negative impacts were determined within the PG&E control area (northern California) as a result of a new 1000 MW Cosumnes Power Plant during normal, single contingency or double line outages, either for cases with a 560 MW generation plant at Elverta or for cases without generation at Elverta.

For the extreme spring conditions studied, the potential adverse impacts observed are much more the result of very high generation levels within the Sacramento area compared to the remainder of the PG&E area and the heavy schedule through the PG&E area from the Pacific Northwest to Southern California than were those impacts the result of the generation at the Cosumnes Power Plant. All impacts are mitigated by load growth in the Sacramento area or generation reductions in the Sacramento Area.

During these spring single contingency conditions, the most significant impact of 1,000 MW new generation at Cosumnes Power Plant was an aggravation of the already overloaded Westley to Tracy line during an outage of the Westley to Tesla line. The impact of the Cosumnes generation is significantly less than the existing overload, and is mitigated by either Sacramento area load growth or Sacramento area generation reduction.

During these spring conditions, the first 500 MW stage of Cosumnes generation introduces no significant negative impacts during either normal system conditions or any of the double contingency conditions studied. The second 500 MW stage of Cosumnes

generation results in a slight overload on the Riverbank Junction to Manteca 115 kV line and several overloaded lines during an outage of both Rancho Seco to Bellota 230 kV lines. These overloads are all mitigated by load growth in the Sacramento area or Sacramento area generation reductions.

4. Study Description

4.1 General Case Descriptions

Power flow analysis was performed using data initially developed by the Pacific Gas and Electric Company (PG&E) and Southern California Edison Company (SCE) provided to the California Independent System Operator (CAISO) for transmission assessment studies. The data was further reviewed and refined by members of the Sacramento Area Transmission Planning Group (SATPG) while being prepared by Western Area Power Administration (Western) for a recently completed interconnection study. That interconnection study was for the proposed Florida Power and Light Energy (FPLE) 560 MW generation plant near the Western/SMUD Elverta Substation in the north-west portion of the SMUD service area.

The cases selected for this Cosumnes Power Plant generation impact study are the 2005 Heavy Summer and 2004 Spring cases, the most current cases reflecting CAISO planning assumptions available at the time these studies were initiated. These cases were developed to investigate future system needs and include foreseeable generation projects but do not include all associated transmission upgrades. Since the base cases do include some element thermal overloads and mitigation of those overloads is outside the scope of this study, only relative, or incremental impacts are addressed here.

To assess the impacts of the Cosumnes Power Plant, both with and without the proposed FPLE generation project at Elverta, four summer cases and four spring cases were developed and subjected to all outage conditions. One pair of summer cases includes no FPLE generation project at Elverta, with one case having no Cosumnes Power Plant and the other including the Cosumnes project. The other pair of summer cases includes the FPLE generation project at Elverta, with one case having no Cosumnes Power Plant and the other including the Cosumnes project. These four cases allow evaluation of the impacts of the Cosumnes Power Plant during the summer conditions both with and without the FPLE generation at Elverta. The four spring cases are developed in precisely the same manner for the same purpose.

These cases do include the Sutter Power Plant (525 MW) constructed just north of Sacramento that is connected to the SMUD system by the Western lines from O'Banion to Elverta. The potential impacts of the proposed FPLE generation project at Elverta are considered by including the combinations of cases listed above. The proposed Roseville and Colusa generation projects were not included. Because of their locations, the impacts on the Sacramento area will be similar to the impacts of the proposed FPLE generation at Elverta, and these studies show that the Cosumnes Power Plant definitely mitigates such impacts and does not aggravate those impacts.

SMUD is planning to construct a new Natomas 230 kV substation between Elverta and Hurley which will be connected by looping its existing Elverta/Hurley line through the new station. This will result in replacing the existing Elverta/Hurley line with the Elverta/Natomas and Natomas/Hurley lines on the same towers. The planned Natomas substation is not included in the primary base cases for the Cosumnes Power Plant impact study, but is included as sensitivity studies, for the following reasons.

Proposed projects such as the FPLE generation at Elverta, the Roseville generation project and the Colusa project, because of their proximity to the north of SMUD, will have some negative impacts on this new SMUD configuration in addition to any negative impacts on the existing configuration. Since (1) the Cosumnes Power Plant definitely helps to mitigate these impacts, (2) the resolution of further mitigation of those impacts are issues that will be negotiated in another forum, and (3) the final design will be influenced by negotiations and by whether those projects materialize, the primary cases for this Cosumnes Power Plant impact study did not add the anticipated Natomas substation.

This issue is addressed through sensitivity studies, however. Appendix E includes flow diagrams for the four summer base cases that do include the Natomas substation. Comparing these to the corresponding base case flow diagrams in Appendix D that do not include the Natomas substation shows that (1) flow changes are essentially limited to within the SMUD system and (2) the Cosumnes Power Plant definitely acts to reduce the heavy flows of concern on the Elverta/Natomas line. The small differences in flows on lines connecting the SMUD system to other systems can be attributed more to the associated redistribution of load within SMUD (with the new substation) than to the reconfiguration itself.

4.2 Summer Case Descriptions

The summer case, without the Cosumnes Power Plant and without the FPLE generation at Elverta, reflects PG&E area peak load of 25,999 MW with PG&E area generation at 22,848 MW. Import into California from the Pacific Northwest is at the maximum of 4,800 MW and the transfer from the PG&E area to Southern California is 650 MW. SMUD load is 3,138 MW and SMUD generation is 1,000 MW.

When the FPLE generation at Elverta is added (560 MW), the transfer from the PG&E area to Southern California is increased to 1,200 MW.

When the Cosumnes Power Plant is added (1000 MW), generation is reduced at PG&E's Diablo Canyon, Helms, Moss Landing, Pittsburg, Contra Costa and Morro Bay plants.

> For comparisons, power transfers from PG&E to Southern California were adjusted in place of reducing PG&E generation, and the results showed no significant differences for the purposes of this study.

4.3 Spring Case Descriptions

The spring case is an extreme test of worst case impacts of additional generation in the Sacramento area. The Sacramento area load is at an extreme low, Sutter Generation remains high, Cosumnes Power Plant and FPLE generation at Elverta are maximum when included, and imports from the Northwest are high and exports to Southern California are maximum to stress the north to south flows.

The spring case, without the Cosumnes Power Plant and without the FPLE generation at Elverta, reflects PG&E area load of 15,622 MW with PG&E area generation at 15,622 MW. Import into California from the Pacific Northwest is quite high at 4,500 MW and the transfer from the PG&E area to Southern California is at the 3,600 MW maximum. SMUD load is only 1,226 MW and SMUD generation is at a heavy summer level of 1,000 MW.

When the FPLE generation at Elverta is added (560 MW), PG&E generation outside the Sacramento area is reduced proportional to output (about 3.7% at each generator).

When the Cosumnes Power Plant is added (1000 MW), PG&E generation outside the Sacramento area is reduced proportional to output (about 6.7% at each generator).

With the Sutter Power Plant, FPLE generation at Elverta, Cosumnes Power Plant and the remaining generation within SMUD, 20% of the generation on line in the PG&E area is concentrated in the Sacramento area.

4.4 Study Method

This study is focused on power flow analysis of system normal conditions, single contingency outage conditions, and selected double contingency conditions (double line outages). Power flow investigations included those for thermal constraints and for local area reactive support.

Appendix A includes PV curves for all four summer base cases. The results show the effects of the most severe single and double line outages to demonstrate that the addition of the Cosumnes Power Plant clearly provides increased area load handling capability from a voltage support perspective.

Appendix B includes a series of tables describing effects of the addition of the Cosumnes Power Plant during system normal and selected most severe double line outages for systems with and without the FPLE generation at Elverta to demonstrate that the Cosumnes Power Plant either has no significant negative impacts on other system components or helps to mitigate existing stress conditions.

Appendix C includes a series of TransferLimit program outputs that allow comparisons to demonstrate that the Cosumnes Power Plant has no significant negative impacts on other

system components during single line outage conditions and generally increases the area load handling capability.

Appendix D includes a series of powerflow diagrams to help describe the flow patterns for the various cases. Each set includes, in order, the base case flow diagram, a single line outage flow diagram for each of two outages of major lines near the Cosumnes Power Plant, and two double line outage flow diagrams for the major parallel double line outages near the Cosumnes Power Plant. This appendix includes eight such sets of diagrams in the following order: heavy summer without Cosumnes and without FPLE, heavy summer with Cosumnes and without FPLE, heavy summer without Cosumnes and with FPLE, heavy summer with Cosumnes and with FPLE, and sets for the four spring cases in the same order. The sets with and without Cosumnes are arranged adjacent to each other for ease of comparisons.

Appendix E includes a series of powerflow diagrams for the sensitivity cases to show the effects of including a Natomas 230 kV substation result in no significant flow changes outside the SMUD system and to show that Cosumnes helps mitigate potential impacts on an Elverta/Natomas line of generation additons to the north and in proximity of SMUD. These diagrams are for system normal conditions and correspond in order to the sets in Appendix D.

4.5 Study Criteria

This study complies with the National Electric Reliability Council (NERC) and Western Systems Coordinating Council (WSCC) planning criteria. The specific criteria that apply to this steady state study relate to thermal ratings for system elements and system voltages.

Each system element is given a normal rating and an emergency rating, in MVA or amperes, based on its ability to safely handle the temperature resulting from the power or current flow through it. The normal rating is applied during system normal conditions (no outages) and the emergency rating is applied during contingency conditions (single and double element outages). The emergency rating is often higher than the normal rating because it is applied less frequently and for shorter durations.

Thermal Rating Criteria	
System Condition	**Applicable Criteria**
System Normal Conditions (No Outages)	Element Flows <= Normal Ratings
Outage Conditions (Single and Double)	Element Flows <= Emergency Ratings

Bus Voltage Criteria	
System Condition	**Applicable Criteria**
System Normal Conditions (No Outages)	System Bus Voltages >= 0.95 per unit (e.g., 218 kV for 230 kV bus)
Outage Conditions (Single and Double)	

There are some apparent exceptions to the strict application of the Thermal Rating Criteria for consistently overstressed elements remote from the Cosumnes Power Plant. The justification, as stated before, is as follows.

The cases selected for this Cosumnes Power Plant generation impact study were the most current cases reflecting CAISO planning assumptions available at the time these studies were initiated. These cases were developed to investigate future system needs and include foreseeable generation projects but do not include all associated transmission upgrades. Since the original base cases do include some unresolved element thermal overloads and the mitigation of those overloads is outside the scope of this study, only relative, or incremental impacts are addressed for those elements.

4.6 Future Studies

Stability studies will be deferred until generator specifics are available, but are not anticipated to reveal any system problems. A large generation plant was previously located at the Rancho Seco site, the system is still well coupled, and stability studies will only be needed to verify proper generator settings.

For similar reasons, fault impact studies will be deferred until all generation and transformation equipment specifics are available. Stations reasonably close to the proposed Cosumnes Power Plant were already designed to handle fault duties imposed by the Rancho Seco Nuclear Generation Plant. The Rancho Seco plant was the same size as the proposed Cosumnes plant, and was connected to the transmission system in the very same way at the same location.

5. Sacramento Area Voltage Support Studies

5.1 The criteria for evaluating voltage support capability for area loads is based on PV analysis, which is the relationship of area voltage as a function of area load. PV curves, such as those included in Appendix A, describe those relationships graphically. Two types of criteria apply for this area and fully meet the WSCC requirements. The first criterion, a locally imposed requirement, is that system voltage not sag below 218 kV. The remaining criteria, specified by WSCC, are that loads may not exceed 95% of the nose point of the worst case single contingency curve and may not exceed 97.5% of the nose point of the worst case double line outage curve.

With the addition of the Sutter Power Plant just north of the Sacramento area, near term voltage support needs are satisfied, but longer term needs remain a concern. Current projections of the Sacramento area load for the year 2011, including Roseville, are for a 3,648 MW anticipated peak load that could reach an extreme 3,880 MW with a 1-in-10 year probability.

Figures 1 and 2 of Appendix A show that without either the new generation at Elverta or the Cosumnes Power Plant the system would support the load up to 3677 MW during single contingency outages and 3447 MW during double line outages. Some mitigation

would be required for the double line outages and for loads approaching the 1-in-10 year extreme loads for the year 2011.

With the addition of the Cosumnes Power Plant, as shown in Figures 3 and 4 of Appendix A, the single and double contingency load handling capabilities increase to 4,185 MW and 3,999 MW respectively, more than accommodating even the extreme 1-in-10 year forecast for the year 2011.

Comparisons of Figures 5 and 6 and Figures 7 and 8 show a comparable increase in area load handling capability attributable to the Cosumnes Power Plant when assuming the presence of 560 MW of new generation at Elverta.

6. Summer System Normal Condition Thermal Studies

6.1 Analysis Method

To describe the impacts of a 1000 MW Cosumnes Power Plant during system normal conditions, two tables comparing the line and transformer power flows of greatest concern have been developed and are included in Appendix B as Table 1 and Table 2. One table compares power flows before and after the addition of the Cosumnes Power Plant project to a system that includes a new 560 MW generation plant near the Elverta Substation. The other table compares power flows with and without the Cosumnes Power Plant for a system without the proposed generation near Elverta. Flows listed in each table are those flows within the PG&E control area that are greater than 98% of the system normal rating of a line or transformer either with or without the Cosumnes generation. Flows are listed within each table in the order of increases in flows with the addition of Cosumnes generation, with greatest increases listed first. Flows are shown in units of MVA and percentages of system normal (no outages) thermal ratings.

6.2 Analysis Discussion

6.2.1 No New Generation at Elverta (Appendix B, Table 1)

For elements with flows near or above normal ratings, only two lines and three transformers show increases greater than 0.1 MVA for the addition of 1000 MW generation at The Cosumnes Power Plant. All increases shown are small, with the largest being less than 1% of the generation added at Cosumnes. Flows on the two Round Mountain to Table Mountain 500 kV lines increased only 8.7 MVA and 8.6 MVA, and flows on both lines remained below normal system ratings. Likewise, flow on the Los Banos 230/70 kV transformer remained below normal system rating after a 2.2 MVA increase.

The addition of generation at The Cosumnes Power Plant also increased flows on two PG&E transformers that were already loaded to 114% and 115% of their normal ratings prior to adding the Cosumnes generation. Flow on the Lockford 230/60 kV transformer

was increased by 2.2 MVA and flow on the Brighton transformer was increased by 6.9 MVA.

6.2.2 560 MW New Generation at Elverta (Appendix B, Table 2)

For elements with flows near or above normal ratings, only one line and seven transformers showed increases for the addition of 1000 MW generation at The Cosumnes Power Plant. A Round Mountain to Table Mountain 500 kV line flow increased 5.1 MVA and remained below its normal system rating. Flows on the three Warnerville 230/115 kV transformers were 9.2 MVA on two transformers and 18.4 MVA on the other, with all flows remaining within the normal system ratings.

With the addition of the new generation at Elverta, a SMUD 230/69 kV transformer at Elverta and a PG&E 230/70 kV transformer at Los Banos became loaded above their normal system ratings. The increase in flows on these transformers with the addition of the Cosumnes generation was 0.6 MVA and 0.8 MVA, respectively. Flows on the SMUD Elverta transformer were between the 230 kV bus connection and a fictitious internal modeling midpoint, and would be addressed with the addition of generation at Elverta. Flows on the PG&E transformer at Los Banos were only marginally above normal system rating and are rather remote from the Cosumnes generation.

The addition of generation at Cosumnes also increased flows on two PG&E transformers that were already loaded to 114% of their normal ratings prior to adding the Cosumnes generation. Flow on the Lockford 230/60 kV transformer was increased by 1.0 MVA and flow on the Brighton transformer was increased by 7.3 MVA.

6.3 Analysis Summary

No significant adverse impacts as a result of adding 1000 MW generation at Cosumnes were identified, either with or without the proposed 560 MW generation near the Elverta Substation.

The most significant impacts to overloaded elements from Cosumnes generation were those to the Lockford and Brighton transformers, both of which were already loaded 14% to 15% above normal system ratings prior to the addition of the Cosumnes generation. The additional flow on the Lockford 230/60 kV transformer as a result of adding 1000 MW generation at Cosumnes varied between 1.0 MVA and 2.2 MVA. The additional flow on the Brighton transformer varied between 6.9 MVA and 7.3 MVA, was well less than 1% of the generation addition at Cosumnes, and was between the 230 kV bus connection and a fictitious internal modeling midpoint.

7. Summer Single Contingency Thermal Studies

7.1 Analysis Method

Each of the four base cases (with and without the Cosumnes generation, and with and without the Elverta generation) was studied for over 90 different line and transformer outages. Because of the large number of power flow solutions required, outages were limited to those elements most likely to result in overloads impacted by additional generation at Cosumnes. Results of those studies were used as input to SMUD's TransferLimit program. TransferLimit analysis results are included in Appendix C as four two-page reports.

Input to the TransferLimit program includes information from:

- a base case,
- each of the outage cases,
- a case with some schedule change, and
- normal and emergency ratings of each line and transformer being monitored.

Output from the TransferLimit program includes information describing:

- overloaded elements in the base case without outages and without schedule changes,
- for each element being monitored, how much the schedule change should be adjusted to cause the element to be loaded to its normal system rating without outages,
- for each element being monitored, how much the schedule change should be adjusted to cause the element to be loaded to its contingency (emergency) system rating for outages of each of the other monitored elements.

The transfer schedule being tested in each of the TransferLimit reports is a power transfer into the SMUD/Roseville load area (an increase in SMUD/Roseville system load). The Schedule MW Limit values shown in the reports are the increases in loads (additional incremental schedules into the load area) that cause individual elements to be loaded to their ratings. In the first report listing of Appendix B (no Cosumnes generation, no FPLE generation) under "forward schedule normal limits were detected," a Schedule MW Limit of 523 is shown for the HURLEY W to TRCY PMP 230 kV line #2. This means that with an increase of 523 MW to the SMUD/Roseville load above the base case load the HURLEY W to TRCY PMP 230 kV line #2 will become loaded to its system normal thermal limit. Similar information is provided in the "forward schedule outage limits were detected" section, but the outage condition during which the limit was found is identified and the rating applied is the system contingency (emergency) thermal limit.

Only a portion of the most constraining limits are reported by TransferLimit (in these reports, only a handful of over 32,000 calculated limits). Advantages to this approach are the perspective available through the filtered output of so many potential conditions and the ability to quickly compare various scenarios on the relative basis of their most constraining contingencies.

Overloads appear to be slightly less severe in these TransferLimit reports because they are based on MW values rather than MVA as shown in the Appendix B tables. The relative impacts are unchanged, however.

7.2 Analysis Discussion

7.2.1 No New Generation at Elverta (Appendix C, Pages 1&2 and 3&4)

Without generation at Cosumnes (and without generation at Elverta), overloads are found on each of the two O'Banion to Elverta 230 kV transmission lines when the other is out of service under base case conditions (no additional SMUD/Roseville load). The Rio Oso to Atlantic 230 kV line overloads under the same conditions for an outage of the Gold Hill to Rio Oso 230 kV line. Some of the other most limiting constraints are the 110 MW load increase limit imposed by the Hurley 230/115 kV transformer with the Hedge to Procter 230 kV line out and the 129 MW load increase limit imposed by a Hurley to Tracy 230 kV line with the other Hurley to Tracy 230 kV line out.

With 1000 MW of generation added at Cosumnes, overloads on the O'Banion to Elverta 230 kV transmission lines during outages are eliminated and will not occur until the load increase being tested reaches an additional 400 MW. The Rio Oso to Atlantic 230 kV line overload during an outage of the Gold Hill to Rio Oso 230 kV line is reduced in magnitude. The load increase limit imposed by the Rio Oso to Atlantic 230 kV line during an outage of the Atlantic to Rio Oso 230 kV line improved to an additional 443 MW from the 202 MW limit without Cosumnes generation.

7.2.2 560 MW New Generation at Elverta (Appendix C, Pages 5&6 and 7&8)

Without generation at Cosumnes (and with 560 MW generation at Elverta), overloads are found under base case conditions (no additional SMUD/Roseville load) on the Hurley 230/115 kV transformer during an outage of the Hedge to Procter 230 kV line and on each of the Elverta to Hurley 230 kV lines during outages of the other Elverta to Hurley line. The next most constraining limit is the 134 MW SMUD/Roseville load increase limit imposed by the Hurley to Carmichael 230 kV line during an outage of the Hedge to Procter 230 kV line.

With the addition of 1000 MW generation at Cosumnes, the overloads on the Hurley 230/115 kV transformer and the two Elverta to Hurley 230 kV lines are eliminated for single contingency conditions. The most constraining limit to the SMUD/Roseville load increase becomes 606 MW during an outage of the Elverta to Foothill 230 kV line.

7.3 Analysis Summary

The addition of 1000 MW generation at Cosumnes improves the area thermal load handling capability during single contingency conditions. The improvement attributed to the Cosumnes Power Plant is significant without the new generation at Elverta and even more substantial when assuming the new generation at Elverta has been available.

8. Summer Double Contingency (Double Line Outage) Thermal Studies

8.1 Analysis Method

To describe the impacts of a 1000 MW generation plant at Cosumnes during double line outage conditions, two tables comparing the line and transformer power flows of greatest concern for each of six sets of double line outages near Rancho have been developed and are included in Appendix B as Table 3 through Table 14. Each pair of tables (for each double line outage) displays the same types of information as do the system normal tables discussed above and are organized in the same manner. For each double line outage, flows for heavily loaded lines and transformers are shown with and without Cosumnes generation and assuming no new generation project near Elverta, and then shown again with and without Cosumnes generation while assuming a new 560 MW generation plant near the Elverta substation. Flows are shown in units of MVA and percentages of emergency (contingency conditions) thermal ratings.

The double line outages considered are those closest to and anticipated to be the most heavily impacted by a 1000 MW generation project at Cosumnes. Those double line outages are:

Rancho Seco to Bellota 230 kV Lines 1 and 2 Out
Rancho Seco to Pocket 230 kV Lines 1 and 2 Out
Rancho Seco to Hedge and Rancho Seco to Elk Grove 230 kV Lines Out
Hurley to Tracy 230 kV Lines 1 and 2 Out
Elverta to Hurley 230 kV Lines 1 and 2 Out
O'Banion to Elverta 230 kV Lines 1 and 2 Out

8.2 Analysis Discussion

Results of the double line outages are quite consistent with those for system normal conditions. With emergency ratings applied, however, fewer flows through lines and transformers generally exceed ratings.

The only element that became loaded above its emergency rating that was not discussed in the previous section regarding system normal conditions is a transformer at Panoche. It became most heavily loaded during simultaneous outages of both Rancho Seco to Bellota 230 kV lines. Without a generation project at Elverta, 1000 MW generation at Cosumnes increased flow on the Panoche transformer by 5.4 MVA and resulted in total flow of 100.6% of the contingency rating. With a 560 MW generation project at Elverta, the increase in flow through the Panoche transformer with the Cosumnes generation was 2.5 MVA and the resulting total flow was 101.9% of the contingency rating. This transformer is rather remote from Cosumnes, being located south of Los Banos, and the impact imposed on this transformer by generation at Cosumnes should not be considered significant.

Maximum impacts on the Warnerville transformers were 9.9 MVA and 19.9 MVA during the Rancho Seco to Hedge and Rancho Seco to Elk Grove double line outage versus the 9.2 MVA and 18.4 MVA increases for the system normal conditions. These transformers are also rather remote from Cosumnes and impacted more by the larger shift in generation away from the southern portion of the PG&E system than directly by the Cosumnes generation. The impacts on these transformers should not be considered significant.

The impacts on the SMUD Elverta transformers occur under similar conditions as for the system normal cases, and will be addressed upon addition of substantial generation near Elverta.

The maximum impact on the Brighton transformer from 1000 MW generation at Cosumnes was 9.0 MVA during the double line outage of both Hurley to Tracy 230 kV lines. Because the contingency rating was applied during the outage, however, the total flow was only 100.1% of its rating.

8.3 Analysis Summary

No significant adverse impacts as a result of adding 1000 MW generation at Cosumnes were identified, either with or without the proposed 560 MW generation near the Elverta Substation.

9. Summer Thermal Study Conclusion

No significant adverse impacts as a result of adding 1000 MW generation at Cosumnes were identified, either with or without the proposed 560 MW generation near the Elverta Substation.

10. Spring System Normal Condition Thermal Studies

10.1 Analysis Method

To describe the impacts of a 1000 MW Cosumnes Power Plant during system normal conditions, as for the summer cases, two tables comparing the line and transformer power flows of greatest concern have been developed and are included in Appendix B as Table 15 and Table 16. One table compares power flows before and after the addition of the Cosumnes Power Plant project to a system that includes a new 560 MW generation plant near the Elverta Substation. The other table compares power flows with and without the Cosumnes Power Plant for a system without the proposed generation near Elverta. Flows listed in each table are those flows within the PG&E control area that are greater than 98% of the system normal rating of a line or transformer either with or without the Cosumnes generation. Flows are listed within each table in the order of increases in flows with the addition of Cosumnes generation, with greatest increases listed first. Flows are shown in units of MVA and percentages of system normal (no outages) thermal ratings.

10.2 Analysis Discussion

10.2.1 No New Generation at Elverta (Appendix B, Table 15)

For elements with flows near or above normal ratings, only one line shows an increase greater than 1 MVA for the addition of 1000 MW generation at The Cosumnes Power Plant. Flow on the Riverbank Junction to Manteca 115 kV line increases to its normal rating with the increase of 16.8 MVA, less than 2% of the Cosumnes generation added.

10.2.2 560 MW New Generation at Elverta (Appendix B, Table 2)

For elements with flows near or above normal ratings, only two lines show increases greater than 1 MVA for the combined generation addition of 1000 MW at the Cosumnes Power Plant and 560 MW at Elverta. Flow on the Riverbank Junction to Manteca 115 kV line increases to 106.9% of its normal rating, but a generation reduction of 500 MW between Cosumnes and Elverta in any combination would alleviate the overload. The slight 101.9% overload on the Westley to Tracy 230 kV line would also be relieved by the same generation reduction, and is less significant. Again, the maximum impact of 16.9 MVA is less than 2% of the Cosumnes generation added.

10.3 Analysis Summary

No significant adverse impacts as a result of adding 1000 MW generation at Cosumnes were identified without the proposed 560 MW generation near the Elverta Substation. For cases with the 560 MW generation addition near Elverta and under the extreme conditions represented in these spring cases, a 500 MW reduction in Sacramento area generation would alleviate even the 17 MVA (or less) impacts identified, which would also be reduced and ultimately eliminated by load growth in the Sacramento area.

11. Spring Single Contingency Thermal Studies

11.1 Analysis Method

As with the summer cases, each of the four spring base cases (with and without the Cosumnes generation, and with and without the Elverta generation) was studied for over 90 different line and transformer outages. Because of the large number of power flow solutions required, outages were limited to those elements most likely to result in overloads impacted by additional generation at Cosumnes. Results of those studies were used as input to SMUD's TransferLimit program (described above in section 7, Summer Single Contingency Thermal Studies).

Particular attention was paid to the PG&E lines in and out of Cottle A and Cottle B and the 230 kV lines into, out of and within MID to address their expressed concerns relating specifically to spring conditions.

11.2 Analysis Discussion

The heavy generation levels within the Sacramento area for these spring cases, as with the heavy summer cases, created no local single contingency overloads. As with the spring normal condition cases, the primary challenge is moving the disproportionately high levels of generation within the Sacramento area away from the local area. The TransferLimit program identified only one single contingency overload when spring ratings were applied, and verified that Sacramento area load increases reduced that overload and did not create additional single contingency overloads for area load increases in excess of an additional 1,000 MW.

The single contingency overload identified was the Westley to Tracy 230 kV line overload during an outage of the Westley to Tesla 230 kV line. For the extreme spring conditions studied, the Westley to Tracy line became loaded to 126.7% during the outage of the Westley to Tesla line even with no generation at Elverta or Cosumnes. The following table shows the relative impacts of new generation at Elverta and Cosumnes on that specific overload.

Westley/Tracy Line Flow with Westley/Tesla Out

	Rancho Seco Generation					
Gen. At	0 MW		1000 MW		Increase	
Elverta	MVA	% Rate	MVA	% Rate	**MVA**	% Rate
0 MW	454.5	126.7	482.8	135.4	**28.3**	8.7
560 MW	482.5	135.0	508.2	143.1	**25.7**	8.1

11.3 Analysis Summary

The addition of 1000 MW generation at Cosumnes aggravates the existing overload on the Westley to Tracy line during an outage of the Westley to Tesla line for the extreme conditions studied. The impact is significantly less than the existing overload, and is further reduced by load growth within the Sacramento area. The impacts of generation at Cosumnes and Elverta should be re-evaluated by SMUD, the CAISO and PG&E while addressing the existing potential problem.

12. Spring Double Contingency (Double Line Outage) Thermal Studies

12.1 Analysis Method

To describe the impacts of a 1000 MW generation plant at Cosumnes during double line outage conditions, two tables comparing the line and transformer power flows of greatest concern for the most significant of six sets of double line outages near Rancho have been developed and are included in Appendix B as Table 17 and Table 18. The pair of tables displays the same types of information as do previous tables discussed above and are organized in the same manner.

As for the summer cases, the double line outages considered for these extreme spring cases are those closest to and anticipated to be the most heavily impacted by a 1000 MW generation project at Cosumnes. Those double line outages are:

Rancho Seco to Bellota 230 kV Lines 1 and 2 Out
Rancho Seco to Pocket 230 kV Lines 1 and 2 Out
Rancho Seco to Hedge and Rancho Seco to Elk Grove 230 kV Lines Out
Hurley to Tracy 230 kV Lines 1 and 2 Out
Elverta to Hurley 230 kV Lines 1 and 2 Out
O'Banion to Elverta 230 kV Lines 1 and 2 Out

12.2 Analysis Discussion

The double contingency outage of both Rancho Seco to Bellota 230 kV lines during these extreme spring conditions resulted in overloads on the Hurley/Procter, Hedge/Procter, Westley/Tracy, and both Hurley/Tracy 230 kV lines. These overloads are not a concern for the first 500 MW of Cosumnes generation and will all be reduced with load growth in the Sacramento area.

The remaining double line outages considered produced no new or increased overloads.

12.3 Analysis Summary

No significant adverse impacts as a result of adding the first stage 500 MW generation at Cosumnes were identified, either with or without the proposed 560 MW generation near the Elverta Substation. Impacts of the second 500 MW stage at Cosumnes are observed under extreme conditions, will be relieved by normal load growth, may be relieved by other normal system development, and at worst could be controlled with design mitigation incorporated into the second 500 MW stage of Cosumnes generation.

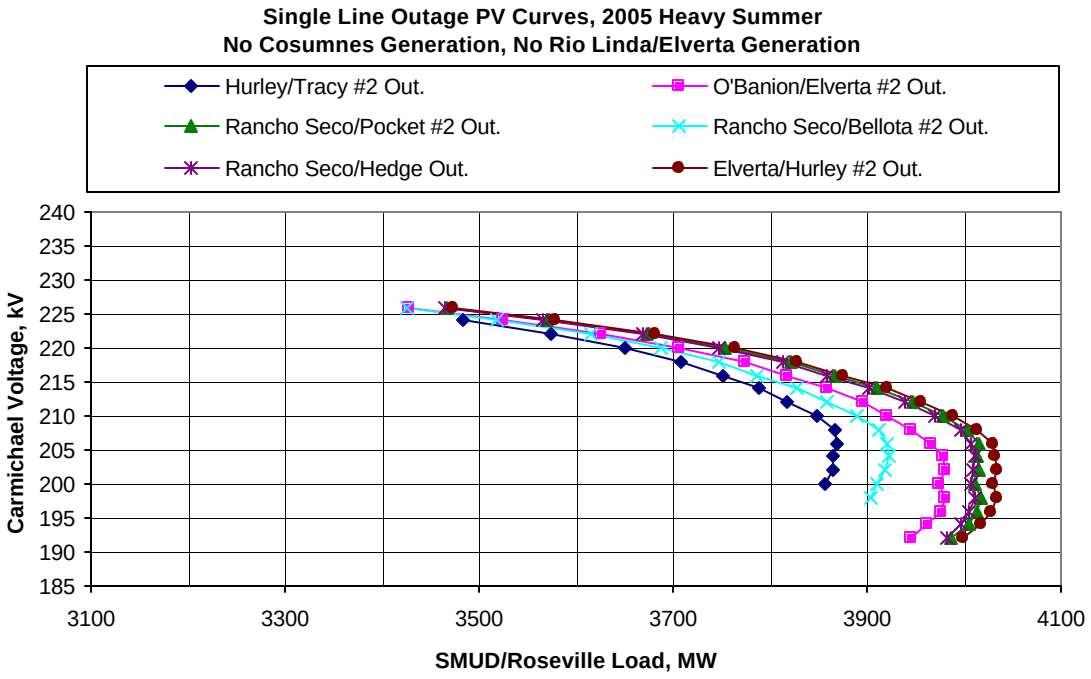

Figure 1

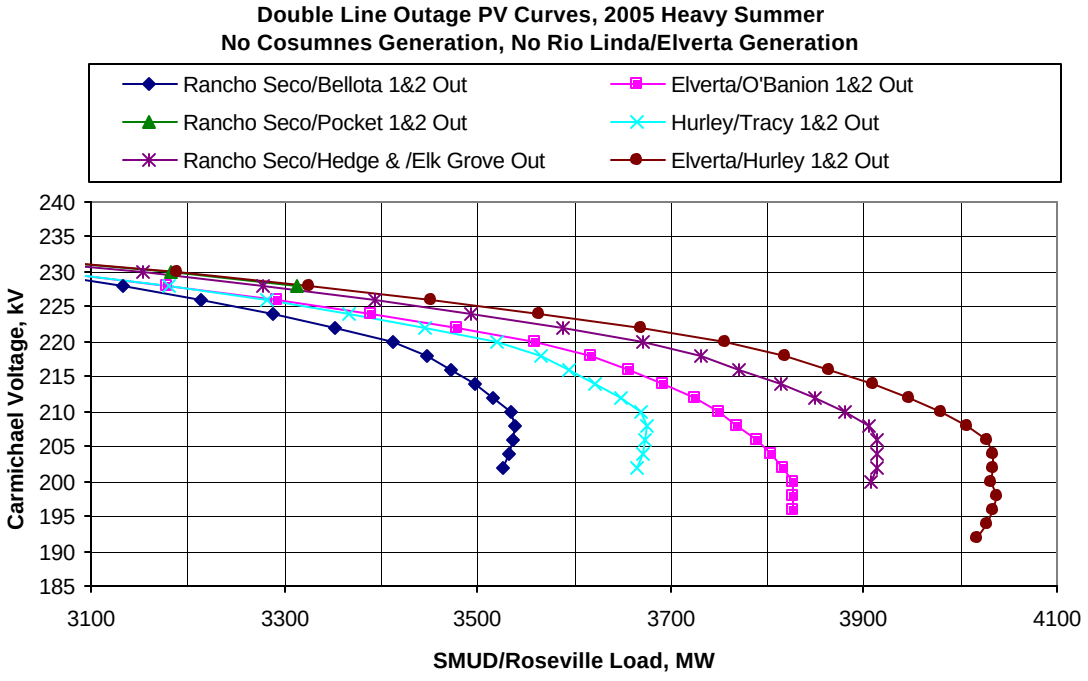

Figure 2

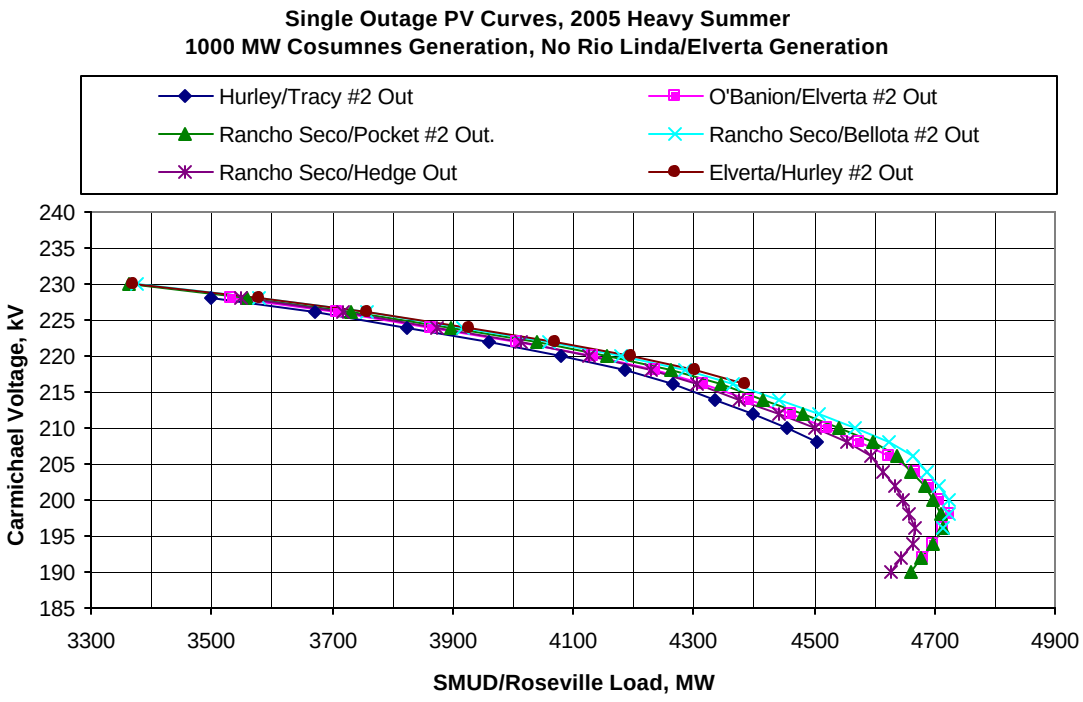

Figure 3

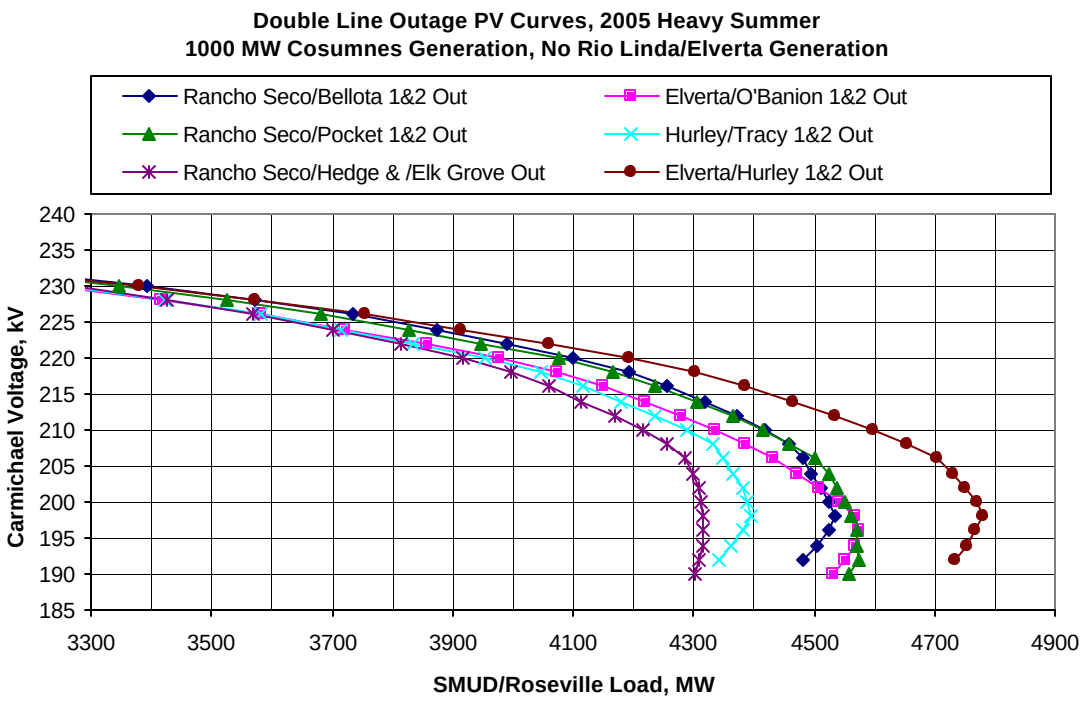

Figure 4

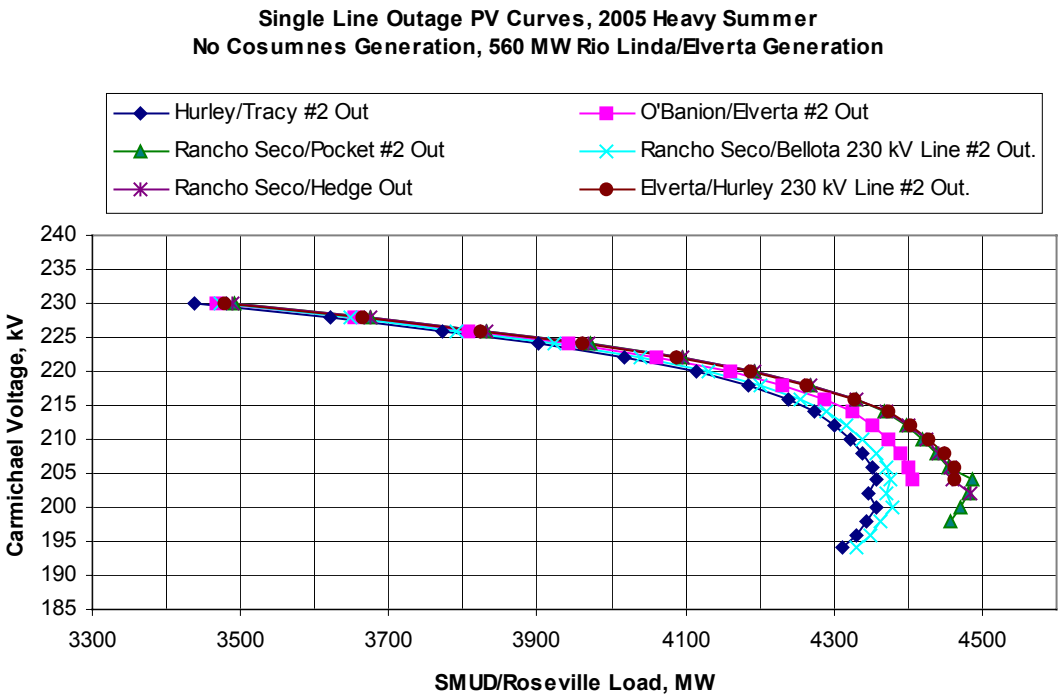

Figure 5

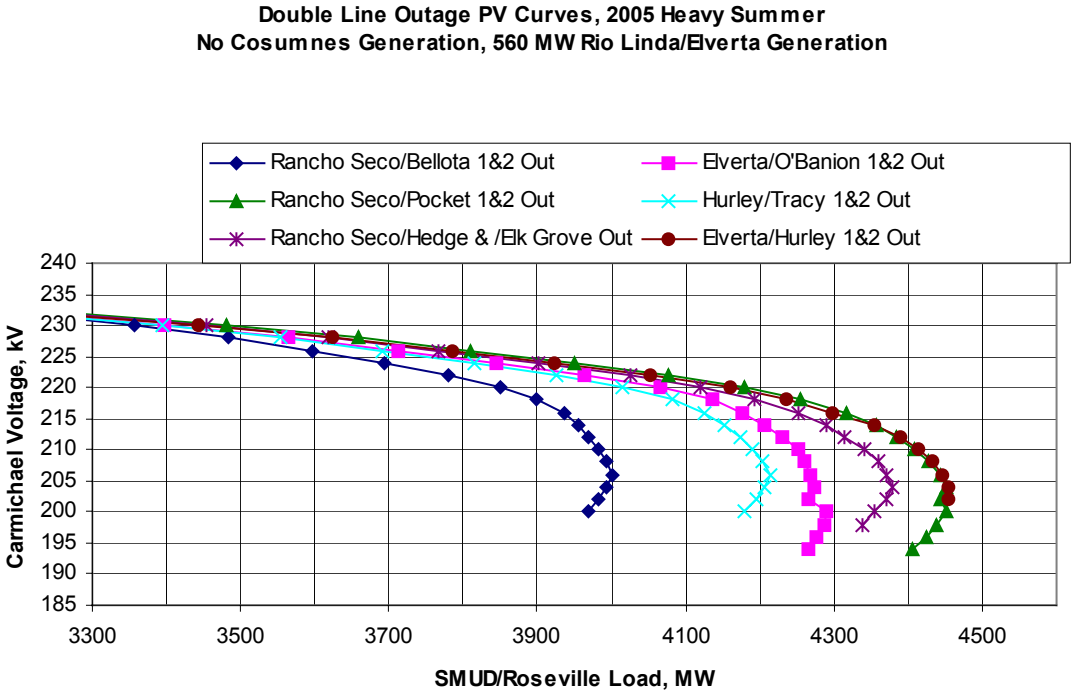

Figure 6

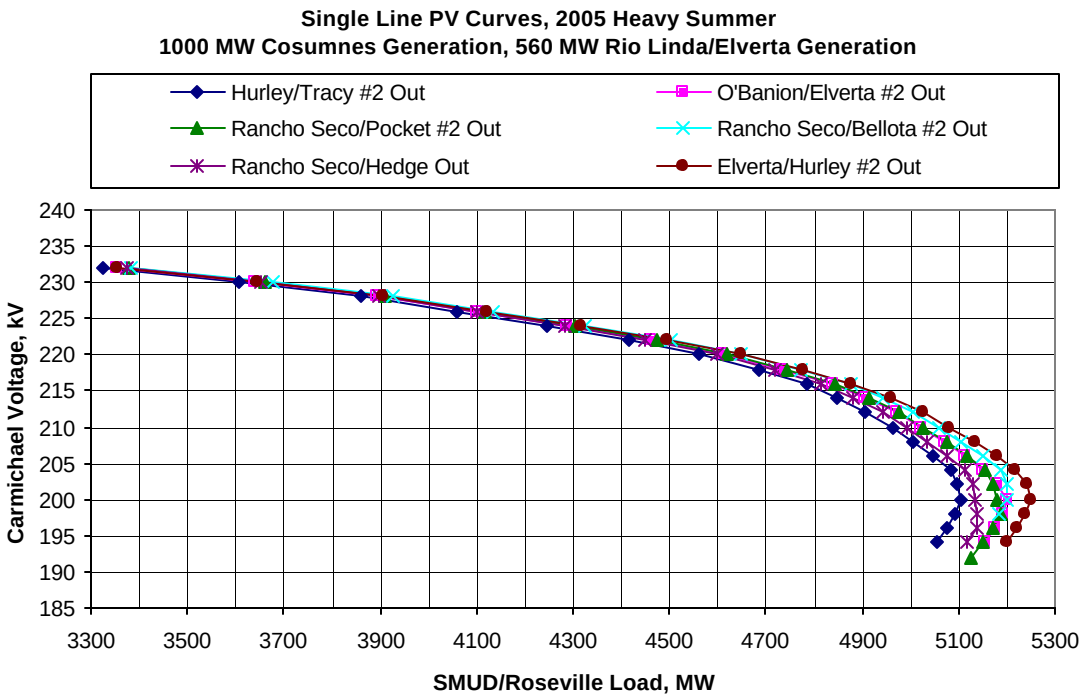

Figure 7

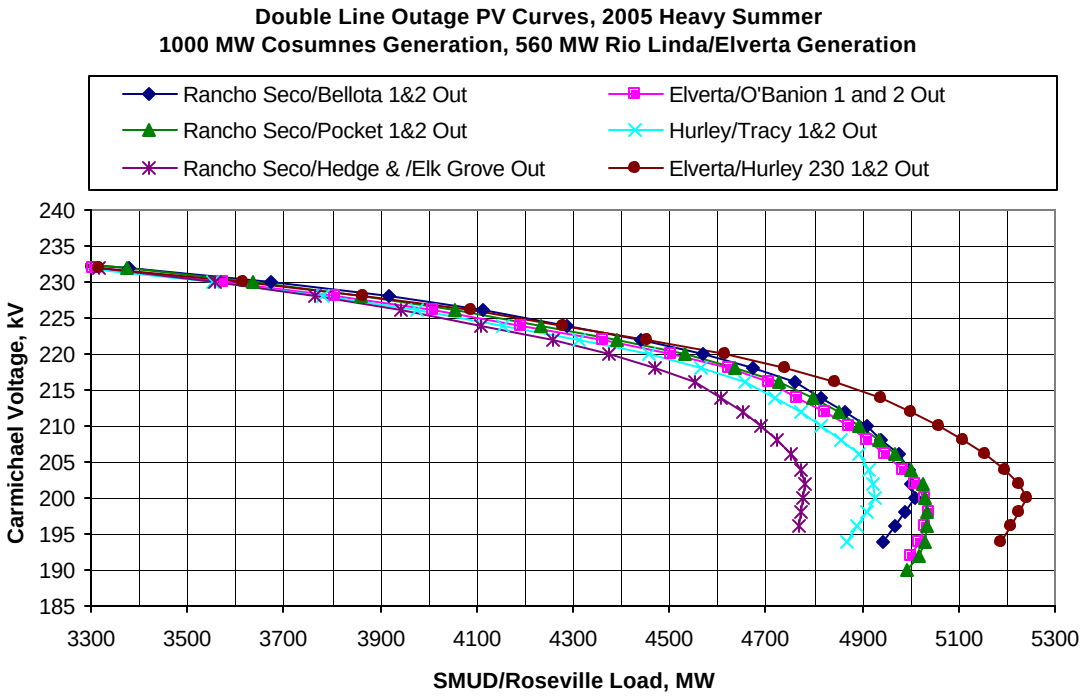

Figure 8

Table 1

Power Flows Without and With Cosumnes Generation
2005 Heavy Summer, No New Generation at Elverta

					Cosumnes Generation					
From		To			0 MW		1000 MW		Increase	
Name	kV	Name	kV	ID	MVA	% Rate	MVA	% Rate	**MVA**	% Rate
ROUND MT	500.0	TABLE MT	500.0	2	1627.0	99.2	1635.7	99.1	**8.7**	-0.1
ROUND MT	500.0	TABLE MT	500.0	1	1613.2	98.3	1621.8	98.2	**8.6**	-0.1
BRIGHTON	230.0	BRGHTN M	230.0	1	136.9	114.0	143.8	119.8	**6.9**	5.8
LOCKFORD	230.0	LOCKEFRD	60.0	1	154.5	115.0	156.8	116.7	**2.3**	1.7
LOSBANOS	230.0	LOS BANS	70.0	1	116.9	97.4	119.1	99.2	**2.2**	1.8
HYATT	230.0	HYATT 2	12.5	1	122.8	99.2	122.9	99.2	**0.1**	0.0
HYATT	230.0	HYATT 4	12.5	1	122.8	99.2	122.9	99.2	**0.1**	0.0
HYATT	230.0	HYATT 6	12.5	1	122.8	99.2	122.9	99.2	**0.1**	0.0
BLLTA 1M	230.0	BELLTA T	13.8	1	37.9	100.0	38.0	100.0	**0.1**	0.0
STD. OIL	115.0	ChevGen2	13.8	1	59.5	99.6	59.6	99.6	**0.1**	0.0
FOLSOM	230.0	FOLSOM2	13.8	1	62.2	98.3	62.3	98.3	**0.1**	0.0
HYATT	230.0	HYATT 1	12.5	1	122.9	99.3	123.0	99.3	**0.1**	0.0
HYATT	230.0	HYATT 3	12.5	1	122.9	99.3	123.0	99.3	**0.1**	0.0
HYATT	230.0	HYATT 5	12.5	1	122.9	99.3	123.0	99.3	**0.1**	0.0
CH.STN	115.0	CH.STN.	13.8	1	23.9	98.4	23.9	98.4	**0.0**	0.0
DRUM	115.0	DRUM 5	13.8	1	46.4	99.6	46.4	99.6	**0.0**	0.0
STD. OIL	115.0	ChevGen1	13.8	1	59.5	99.6	59.5	99.6	**0.0**	0.0
TOSCO	12.5	FOSTER W	12.5	1	117.1	99.9	117.1	99.8	**0.0**	-0.1
WADHMJCT	60.0	WESCOT2	60.0	1	35.7	118.8	35.7	118.6	**0.0**	-0.2
MOSHERJT	60.0	MSHR 60V	60.0	1	38.8	106.0	38.8	104.6	**0.0**	-1.4
CAPEHORN	60.0	ROLLINS	60.0	1	28.5	99.1	28.4	97.4	**-0.1**	-1.7
VACA-DIX	115.0	VACA-DXN	60.0	1	79.2	99.0	79.1	98.9	**-0.1**	-0.1
MONTAVIS	230.0	MNTA VSA	60.0	1	145.6	108.3	145.4	108.2	**-0.2**	-0.1
ATLANTC	230.0	ATLANTIC	60.0	1	150.2	111.7	150.0	111.6	**-0.2**	-0.1
FRBSTNTP	115.0	FORBSTWN	11.5	1	30.8	99.9	30.6	98.7	**-0.2**	-1.2
PRDE JCT	60.0	PRDE 1-3	7.2	1	18.4	98.3	18.2	97.1	**-0.2**	-1.2
CAPEHORN	60.0	BONNIE N	60.0	1	30.4	105.0	30.2	103.2	**-0.2**	-1.8
FMC	115.0	FMC CT	12.0	1	50.6	98.2	50.4	97.5	**-0.2**	-0.7
POCKET	230.0	POCKET 2	69.0	2	223.4	99.8	223.2	99.7	**-0.2**	-0.1
DRUM	60.0	BONNIE N	60.0	1	32.8	109.5	32.5	107.6	**-0.3**	-1.9
BLACK	230.0	JBBLACK1	13.8	1	82.4	98.5	82.1	97.7	**-0.3**	-0.8
BLACK	230.0	JBBLACK2	13.8	1	82.4	98.5	82.1	97.7	**-0.3**	-0.8
PANOCHE	230.0	PNCHE 2M	230.0	2	123.0	101.0	122.4	100.5	**-0.6**	-0.5
PNCHE 2M	230.0	PANOCHE	115.0	2	122.1	100.2	121.5	99.7	**-0.6**	-0.5
LAKEWD-C	115.0	LKWD_JCT	115.0	1	197.3	120.8	195.6	119.6	**-1.7**	-1.2
ULTPWRJ	115.0	ULTR.PWR	9.1	1	20.1	98.7	18.3	89.6	**-1.8**	-9.1
COLGATE	230.0	COLGATE2	13.8	1	149.6	99.1	147.5	97.0	**-2.1**	-2.1
MELONE1	13.8	MELONES	230.0	1	191.6	99.8	187.4	97.6	**-4.2**	-2.2
PITSBURG	230.0	TASSAJAR	230.0	1	366.2	100.6	359.2	98.5	**-7.0**	-2.1
TBL MT D	230.0	RIO OSO	230.0	1	329.2	103.5	283.2	88.4	**-46.0**	-15.1

Table 2

Power Flows Without and With Cosumnes Generation
2005 Heavy Summer, 560 MW New Generation at Elverta

					Cosumnes Generation					
From		To			0 MW		1000 MW		Increase	
Name	kV	Name	kV	ID	MVA	% Rate	MVA	% Rate	**MVA**	% Rate
WARNERVL	230.0	WRNRVLLE	115.0	1	131.0	87.4	149.4	99.6	**18.4**	12.2
WARNERVL	230.0	WRNRVLLE	115.0	3	65.5	87.4	74.7	99.6	**9.2**	12.2
WARNERVL	230.0	WRNRVLLE	115.0	2	65.5	87.4	74.7	99.6	**9.2**	12.2
BRIGHTON	230.0	BRGHTN M	230.0	1	137.1	114.2	144.4	120.3	**7.3**	6.1
ROUND MT	500.0	TABLE MT	500.0	2	1624.4	98.3	1629.5	98.3	**5.1**	0.0
LOCKFORD	230.0	LOCKEFRD	60.0	1	152.6	113.5	153.6	114.3	**1.0**	0.8
LOSBANOS	230.0	LOS BANS	70.0	1	120.4	100.3	121.2	101.0	**0.8**	0.7
ELVRTAX1	230.0	ELVERTA1	69.0	1	125.8	113.6	126.4	114.1	**0.6**	0.5
MARTIN C	115.0	MRTN ABG	12.0	1	54.9	99.8	54.9	99.9	**0.0**	0.1
BLLTA 1M	230.0	BELLTA T	13.8	1	38.0	100.0	38.0	100.0	**0.0**	0.0
DRUM	115.0	DRUM 5	13.8	1	46.5	99.6	46.5	99.6	**0.0**	0.0
ELVRTAX2	230.0	ELVERTA2	69.0	1	116.3	104.8	116.3	104.8	**0.0**	0.0
FOLSOM	230.0	FOLSOM2	13.8	1	62.3	98.3	62.3	98.3	**0.0**	0.0
HYATT	230.0	HYATT 1	12.5	1	123.0	99.3	123.0	99.3	**0.0**	0.0
HYATT	230.0	HYATT 2	12.5	1	122.9	99.2	122.9	99.2	**0.0**	0.0
HYATT	230.0	HYATT 3	12.5	1	123.0	99.3	123.0	99.3	**0.0**	0.0
HYATT	230.0	HYATT 4	12.5	1	122.9	99.2	122.9	99.2	**0.0**	0.0
HYATT	230.0	HYATT 5	12.5	1	123.0	99.3	123.0	99.3	**0.0**	0.0
HYATT	230.0	HYATT 6	12.5	1	122.9	99.2	122.9	99.2	**0.0**	0.0
POTRERO	115.0	POTRERO1	12.0	1	67.5	99.3	67.5	99.3	**0.0**	0.0
PRDE JCT	60.0	PRDE 1-3	7.2	1	18.4	98.3	18.4	98.3	**0.0**	0.0
STD. OIL	115.0	ChevGen1	13.8	1	59.6	99.6	59.6	99.6	**0.0**	0.0
STD. OIL	115.0	ChevGen2	13.8	1	59.6	99.6	59.6	99.6	**0.0**	0.0
TOSCO	12.5	FOSTER W	12.5	1	117.1	99.9	117.1	99.9	**0.0**	0.0
WADHMJCT	60.0	WESCOT2	60.0	1	34.1	113.5	34.1	113.4	**0.0**	-0.1
OREGON	115.0	OREGON1	12.5	1	22.4	106.7	22.4	106.6	**0.0**	-0.1
MONTAVIS	230.0	MNTA VSA	60.0	1	150.5	111.9	150.4	111.9	**-0.1**	0.0
CH.STN	115.0	CH.STN.	13.8	1	23.9	98.4	23.8	97.8	**-0.1**	-0.6
HNTRSPTD	12.0	HNTRS P1	12.0	1	53.9	99.9	53.8	99.7	**-0.1**	-0.2
ATLANTC	230.0	ATLANTIC	60.0	1	131.8	98.0	131.7	98.0	**-0.1**	0.0
DONNELLS	115.0	DONNELLS	13.8	1	65.7	98.3	65.5	98.0	**-0.2**	-0.3
FMC	115.0	FMC CT	12.0	1	50.6	98.5	50.4	97.7	**-0.2**	-0.8
MELONE1	13.8	MELONES	230.0	1	188.5	98.2	187.4	97.6	**-1.1**	-0.6
ULTPWRJ	115.0	ULTR.PWR	9.1	1	20.2	99.6	19.1	94.0	**-1.1**	-5.6
LAKEWD-C	115.0	LKWD_JCT	115.0	1	198.0	121.0	196.4	120.0	**-1.6**	-1.0
PANOCHE	230.0	PNCHE 2M	230.0	2	124.9	102.6	122.4	100.5	**-2.5**	-2.1
PNCHE 2M	230.0	PANOCHE	115.0	2	124.0	101.8	121.4	99.7	**-2.6**	-2.1
PITSBURG	230.0	TASSAJAR	230.0	1	372.8	102.2	366.1	100.3	**-6.7**	-1.9
TEMPLETN	230.0	MORROBAY	230.0	1	305.0	98.4	261.7	83.9	**-43.3**	-14.5

Table 3

Power Flows Without and With Cosumnes Generation
2005 Heavy Summer, No New Generation at Elverta

Rancho Seco to Bellota 230 kV Lines 1 and 2 Out

					Cosumnes Generation					
From		To			0 MW		1000 MW		Increase	
Name	kV	Name	kV	ID	MVA	% Rate	MVA	% Rate	**MVA**	% Rate
PANOCHE	230.0	PNCHE 2M	230.0	2	117.1	96.1	122.5	100.6	**5.4**	4.5
PNCHE 2M	230.0	PANOCHE	115.0	2	116.3	95.5	121.6	99.8	**5.3**	4.3
FOLSOM	230.0	FOLSOM2	13.8	1	62.0	98.3	62.3	98.3	**0.3**	0.0
HYATT	230.0	HYATT 2	12.5	1	122.8	99.2	122.9	99.2	**0.1**	0.0
HYATT	230.0	HYATT 4	12.5	1	122.8	99.2	122.9	99.2	**0.1**	0.0
HYATT	230.0	HYATT 6	12.5	1	122.8	99.2	122.9	99.2	**0.1**	0.0
BLLTA 1M	230.0	BELLTA T	13.8	1	37.9	100.0	38.0	100.0	**0.1**	0.0
STD. OIL	115.0	ChevGen2	13.8	1	59.5	99.6	59.6	99.6	**0.1**	0.0
HYATT	230.0	HYATT 1	12.5	1	122.9	99.3	123.0	99.3	**0.1**	0.0
HYATT	230.0	HYATT 3	12.5	1	122.9	99.3	123.0	99.3	**0.1**	0.0
HYATT	230.0	HYATT 5	12.5	1	122.9	99.3	123.0	99.3	**0.1**	0.0
WADHMJCT	60.0	WESCOT2	60.0	1	35.7	101.6	35.7	101.2	**0.0**	-0.4
TOSCO	12.5	FOSTER W	12.5	1	117.1	99.9	117.1	99.8	**0.0**	-0.1
CH.STN	115.0	CH.STN.	13.8	1	23.9	98.4	23.9	98.4	**0.0**	0.0
DRUM	115.0	DRUM 5	13.8	1	46.4	99.6	46.4	99.6	**0.0**	0.0
PRDE JCT	60.0	PRDE 1-3	7.2	1	18.4	98.3	18.4	98.3	**0.0**	0.0
STD. OIL	115.0	ChevGen1	13.8	1	59.5	99.6	59.5	99.6	**0.0**	0.0
FMC	115.0	FMC CT	12.0	1	50.6	98.5	50.3	97.5	**-0.3**	-1.0
FRBSTNTP	115.0	FORBSTWN	11.5	1	31.0	100.6	30.6	98.7	**-0.4**	-1.9
BLACK	230.0	JBBLACK1	13.8	1	82.8	99.3	82.1	97.7	**-0.7**	-1.6
BLACK	230.0	JBBLACK2	13.8	1	82.8	99.3	82.1	97.7	**-0.7**	-1.6
POCKET	230.0	POCKET 2	69.0	2	224.2	100.1	223.3	99.7	**-0.9**	-0.4
DRUM	60.0	BONNIE N	60.0	1	34.1	98.9	32.5	92.6	**-1.6**	-6.3
ULTPWRJ	115.0	ULTR.PWR	9.1	1	20.0	98.5	18.3	89.6	**-1.7**	-8.9
LAKEWD-C	115.0	LKWD_JCT	115.0	1	197.3	103.9	195.6	102.8	**-1.7**	-1.1
RALSTON	230.0	RALSTON	13.8	1	83.4	99.7	80.4	93.8	**-3.0**	-5.9
MELONE1	13.8	MELONES	230.0	1	190.5	99.2	187.3	97.5	**-3.2**	-1.7
COLGATE	230.0	COLGATE2	13.8	1	150.9	100.3	147.5	97.0	**-3.4**	-3.3
SPRINGCR	13.8	SPRINGCR	230.0	1	192.1	98.5	187.8	96.3	**-4.3**	-2.2
BRIGHTON	230.0	BRGHTN M	230.0	1	149.1	103.5	143.6	99.7	**-5.5**	-3.8

Table 4

Power Flows Without and With Cosumnes Generation
2005 Heavy Summer, 560 MW New Generation at Elverta

Rancho Seco to Bellota 230 kV Lines 1 and 2 Out

					Cosumnes Generation					
From		To			0 MW		1000 MW		Increase	
Name	kV	Name	kV	ID	MVA	% Rate	MVA	% Rate	**MVA**	% Rate
PANOCHE	230.0	PNCHE 2M	230.0	2	121.6	99.8	124.1	101.9	**2.5**	2.1
PNCHE 2M	230.0	PANOCHE	115.0	2	120.6	99.0	123.1	101.0	**2.5**	2.0
ELVRTAX1	230.0	ELVERTA1	69.0	1	124.9	112.7	126.4	114.1	**1.5**	1.4
ELVRTAX2	230.0	ELVERTA2	69.0	1	115.5	104.0	116.3	104.8	**0.8**	0.8
BLLTA 1M	230.0	BELLTA T	13.8	1	38.0	100.0	38.0	100.0	**0.0**	0.0
CH.STN	115.0	CH.STN.	13.8	1	23.9	98.4	23.9	98.4	**0.0**	0.0
DRUM	115.0	DRUM 5	13.8	1	46.5	99.6	46.5	99.6	**0.0**	0.0
FOLSOM	230.0	FOLSOM2	13.8	1	62.3	98.3	62.3	98.3	**0.0**	0.0
HYATT	230.0	HYATT 1	12.5	1	123.0	99.3	123.0	99.3	**0.0**	0.0
HYATT	230.0	HYATT 2	12.5	1	122.9	99.2	122.9	99.2	**0.0**	0.0
HYATT	230.0	HYATT 3	12.5	1	123.0	99.3	123.0	99.3	**0.0**	0.0
HYATT	230.0	HYATT 4	12.5	1	122.9	99.2	122.9	99.2	**0.0**	0.0
HYATT	230.0	HYATT 5	12.5	1	123.0	99.3	123.0	99.3	**0.0**	0.0
HYATT	230.0	HYATT 6	12.5	1	122.9	99.2	122.9	99.2	**0.0**	0.0
POTRERO	115.0	POTRERO1	12.0	1	67.5	99.3	67.5	99.3	**0.0**	0.0
PRDE JCT	60.0	PRDE 1-3	7.2	1	18.4	98.3	18.4	98.3	**0.0**	0.0
STD. OIL	115.0	ChevGen1	13.8	1	59.6	99.6	59.6	99.6	**0.0**	0.0
STD. OIL	115.0	ChevGen2	13.8	1	59.6	99.6	59.6	99.6	**0.0**	0.0
TOSCO	12.5	FOSTER W	12.5	1	117.1	99.9	117.1	99.9	**0.0**	0.0
DONNELLS	115.0	DONNELLS	13.8	1	65.6	98.1	65.6	98.0	**0.0**	-0.1
OREGON	115.0	OREGON1	12.5	1	22.4	106.7	22.4	106.6	**0.0**	-0.1
HNTRSPTD	12.0	HNTRS P1	12.0	1	53.9	99.9	53.8	99.7	**-0.1**	-0.2
FMC	115.0	FMC CT	12.0	1	50.6	98.5	50.4	97.8	**-0.2**	-0.7
MELONE1	13.8	MELONES	230.0	1	188.2	98.0	187.4	97.6	**-0.8**	-0.4
ULTPWRJ	115.0	ULTR.PWR	9.1	1	20.2	99.6	19.3	94.7	**-0.9**	-4.9
LAKEWD-C	115.0	LKWD_JCT	115.0	1	198.0	103.9	196.5	103.1	**-1.5**	-0.8
BRIGHTON	230.0	BRGHTN M	230.0	1	144.1	100.0	140.5	97.6	**-3.6**	-2.4

Table 5

Power Flows Without and With Cosumnes Generation
2005 Heavy Summer, No New Generation at Elverta

Rancho Seco to Pocket 230 kV Lines 1 and 2 Out

					Cosumnes Generation					
From		To			0 MW		1000 MW		Increase	
Name	kV	Name	kV	ID	MVA	% Rate	MVA	% Rate	**MVA**	% Rate
BRIGHTON	230.0	BRGHTN M	230.0	1	137.7	95.6	145.2	100.9	**7.5**	5.3
HYATT	230.0	HYATT 2	12.5	1	122.8	99.2	122.9	99.2	**0.1**	0.0
HYATT	230.0	HYATT 4	12.5	1	122.8	99.2	122.9	99.2	**0.1**	0.0
HYATT	230.0	HYATT 6	12.5	1	122.8	99.2	122.9	99.2	**0.1**	0.0
BLLTA 1M	230.0	BELLTA T	13.8	1	37.9	100.0	38.0	100.0	**0.1**	0.0
STD. OIL	115.0	ChevGen2	13.8	1	59.5	99.6	59.6	99.6	**0.1**	0.0
HYATT	230.0	HYATT 3	12.5	1	122.9	99.3	123.0	99.3	**0.1**	0.0
HYATT	230.0	HYATT 5	12.5	1	122.9	99.3	123.0	99.3	**0.1**	0.0
CH.STN	115.0	CH.STN.	13.8	1	23.9	98.4	23.9	98.4	**0.0**	0.0
DRUM	115.0	DRUM 5	13.8	1	46.4	99.6	46.4	99.6	**0.0**	0.0
FOLSOM	230.0	FOLSOM2	13.8	1	62.2	98.3	62.2	98.3	**0.0**	0.0
HYATT	230.0	HYATT 1	12.5	1	122.9	99.3	122.9	99.3	**0.0**	0.0
STD. OIL	115.0	ChevGen1	13.8	1	59.5	99.6	59.5	99.6	**0.0**	0.0
TOSCO	12.5	FOSTER W	12.5	1	117.1	99.9	117.1	99.9	**0.0**	0.0
WADHMJCT	60.0	WESCOT2	60.0	1	35.7	101.3	35.7	101.2	**0.0**	-0.1
POCKET	230.0	POCKET 2	69.0	2	223.5	99.8	223.3	99.7	**-0.2**	-0.1
PRDE JCT	60.0	PRDE 1-3	7.2	1	18.4	98.3	18.2	97.3	**-0.2**	-1.0
FMC	115.0	FMC CT	12.0	1	50.6	98.4	50.4	97.6	**-0.2**	-0.8
FRBSTNTP	115.0	FORBSTWN	11.5	1	30.9	100.0	30.6	98.7	**-0.3**	-1.3
BLACK	230.0	JBBLACK1	13.8	1	82.4	98.5	82.1	97.8	**-0.3**	-0.7
BLACK	230.0	JBBLACK2	13.8	1	82.4	98.5	82.1	97.8	**-0.3**	-0.7
PANOCHE	230.0	PNCHE 2M	230.0	2	122.6	100.7	121.8	100.0	**-0.8**	-0.7
PNCHE 2M	230.0	PANOCHE	115.0	2	121.7	99.9	120.8	99.2	**-0.9**	-0.7
ULTPWRJ	115.0	ULTR.PWR	9.1	1	20.1	98.9	18.3	89.6	**-1.8**	-9.3
LAKEWD-C	115.0	LKWD_JCT	115.0	1	197.4	103.9	195.6	102.8	**-1.8**	-1.1
COLGATE	230.0	COLGATE2	13.8	1	149.8	99.3	147.6	97.1	**-2.2**	-2.2
MELONE1	13.8	MELONES	230.0	1	191.6	99.8	187.6	97.7	**-4.0**	-2.1
ELVRTAX2	230.0	ELVERTA2	69.0	1	114.7	103.3	104.4	97.6	**-10.3**	-5.7
ELVRTAX1	230.0	ELVERTA1	69.0	1	123.6	111.6	104.5	94.2	**-19.1**	-17.4

Table 6

Power Flows Without and With Cosumnes Generation
2005 Heavy Summer, 560 MW New Generation at Elverta

Rancho Seco to Pocket 230 kV Lines 1 and 2 Out

					Cosumnes Generation					
From		To			0 MW		1000 MW		Increase	
Name	kV	Name	kV	ID	MVA	% Rate	MVA	% Rate	**MVA**	% Rate
WARNERVL	230.0	WRNRVLLE	115.0	1	132.4	88.3	151.2	100.8	**18.8**	12.5
WARNERVL	230.0	WRNRVLLE	115.0	3	66.2	88.3	75.6	100.8	**9.4**	12.5
WARNERVL	230.0	WRNRVLLE	115.0	2	66.2	88.3	75.6	100.8	**9.4**	12.5
BRIGHTON	230.0	BRGHTN M	230.0	1	137.5	95.5	145.5	101.0	**8.0**	5.5
ELVRTAX1	230.0	ELVERTA1	69.0	1	125.6	113.4	126.3	114.0	**0.7**	0.6
HNTRSPTD	12.0	HNTRS P1	12.0	1	53.8	99.8	53.9	99.8	**0.1**	0.0
ELVRTAX2	230.0	ELVERTA2	69.0	1	116.2	104.7	116.3	104.8	**0.1**	0.1
TOSCO	12.5	FOSTER W	12.5	1	117.1	99.8	117.1	99.9	**0.0**	0.1
BLLTA 1M	230.0	BELLTA T	13.8	1	38.0	100.0	38.0	100.0	**0.0**	0.0
DRUM	115.0	DRUM 5	13.8	1	46.5	99.6	46.5	99.6	**0.0**	0.0
FOLSOM	230.0	FOLSOM2	13.8	1	62.3	98.3	62.3	98.3	**0.0**	0.0
HYATT	230.0	HYATT 1	12.5	1	123.0	99.3	123.0	99.3	**0.0**	0.0
HYATT	230.0	HYATT 2	12.5	1	122.9	99.2	122.9	99.2	**0.0**	0.0
HYATT	230.0	HYATT 3	12.5	1	123.0	99.3	123.0	99.3	**0.0**	0.0
HYATT	230.0	HYATT 4	12.5	1	122.9	99.2	122.9	99.2	**0.0**	0.0
HYATT	230.0	HYATT 5	12.5	1	123.0	99.3	123.0	99.3	**0.0**	0.0
HYATT	230.0	HYATT 6	12.5	1	122.9	99.2	122.9	99.2	**0.0**	0.0
POTRERO	115.0	POTRERO1	12.0	1	67.5	99.3	67.5	99.3	**0.0**	0.0
PRDE JCT	60.0	PRDE 1-3	7.2	1	18.4	98.3	18.4	98.3	**0.0**	0.0
STD. OIL	115.0	ChevGen1	13.8	1	59.6	99.6	59.6	99.6	**0.0**	0.0
STD. OIL	115.0	ChevGen2	13.8	1	59.6	99.6	59.6	99.6	**0.0**	0.0
OREGON	115.0	OREGON1	12.5	1	22.4	106.7	22.4	106.6	**0.0**	-0.1
CH.STN	115.0	CH.STN.	13.8	1	23.9	98.4	23.8	97.9	**-0.1**	-0.5
DONNELLS	115.0	DONNELLS	13.8	1	65.7	98.3	65.5	98.0	**-0.2**	-0.3
FMC	115.0	FMC CT	12.0	1	50.6	98.5	50.4	97.7	**-0.2**	-0.8
MELONE1	13.8	MELONES	230.0	1	188.8	98.3	187.8	97.8	**-1.0**	-0.5
ULTPWRJ	115.0	ULTR.PWR	9.1	1	20.2	99.6	19.2	94.1	**-1.0**	-5.5
LAKEWD-C	115.0	LKWD_JCT	115.0	1	198.0	104.0	196.4	103.1	**-1.6**	-0.9
PANOCHE	230.0	PNCHE 2M	230.0	2	125.0	102.6	121.9	100.1	**-3.1**	-2.5
PNCHE 2M	230.0	PANOCHE	115.0	2	124.0	101.8	120.9	99.2	**-3.1**	-2.6

Table 7

Power Flows Without and With Cosumnes Generation
2005 Heavy Summer, No New Generation at Elverta

Rancho Seco to Hedge and Rancho Seco to Elk Grove 230 kV Lines Out

					Cosumnes Generation					
From		To			0 MW		1000 MW		Increase	
Name	kV	Name	kV	ID	MVA	% Rate	MVA	% Rate	**MVA**	% Rate
BRIGHTON	230.0	BRGHTN M	230.0	1	138.7	96.3	146.8	101.9	**8.1**	5.6
HYATT	230.0	HYATT 2	12.5	1	122.8	99.2	122.9	99.2	**0.1**	0.0
HYATT	230.0	HYATT 4	12.5	1	122.8	99.2	122.9	99.2	**0.1**	0.0
HYATT	230.0	HYATT 6	12.5	1	122.8	99.2	122.9	99.2	**0.1**	0.0
BLLTA 1M	230.0	BELLTA T	13.8	1	37.9	100.0	38.0	100.0	**0.1**	0.0
STD. OIL	115.0	ChevGen2	13.8	1	59.5	99.6	59.6	99.6	**0.1**	0.0
HYATT	230.0	HYATT 3	12.5	1	122.9	99.3	123.0	99.3	**0.1**	0.0
HYATT	230.0	HYATT 5	12.5	1	122.9	99.3	123.0	99.3	**0.1**	0.0
CH.STN	115.0	CH.STN.	13.8	1	23.9	98.4	23.9	98.4	**0.0**	0.0
DRUM	115.0	DRUM 5	13.8	1	46.4	99.6	46.4	99.6	**0.0**	0.0
FOLSOM	230.0	FOLSOM2	13.8	1	62.2	98.3	62.2	98.3	**0.0**	0.0
HYATT	230.0	HYATT 1	12.5	1	122.9	99.3	122.9	99.3	**0.0**	0.0
STD. OIL	115.0	ChevGen1	13.8	1	59.5	99.6	59.5	99.6	**0.0**	0.0
TOSCO	12.5	FOSTER W	12.5	1	117.1	99.9	117.1	99.9	**0.0**	0.0
WADHMJCT	60.0	WESCOT2	60.0	1	35.7	101.4	35.7	101.2	**0.0**	-0.2
PRDE JCT	60.0	PRDE 1-3	7.2	1	18.4	98.3	18.3	97.3	**-0.1**	-1.0
POCKET	230.0	POCKET 2	69.0	2	223.6	99.8	223.4	99.7	**-0.2**	-0.1
FRBSTNTP	115.0	FORBSTWN	11.5	1	30.8	100.0	30.6	98.8	**-0.2**	-1.2
FMC	115.0	FMC CT	12.0	1	50.6	98.4	50.4	97.7	**-0.2**	-0.7
BLACK	230.0	JBBLACK1	13.8	1	82.4	98.6	82.1	97.8	**-0.3**	-0.8
BLACK	230.0	JBBLACK2	13.8	1	82.4	98.6	82.1	97.8	**-0.3**	-0.8
PANOCHE	230.0	PNCHE 2M	230.0	2	122.0	100.2	120.9	99.3	**-1.1**	-0.9
PNCHE 2M	230.0	PANOCHE	115.0	2	121.1	99.5	120.0	98.5	**-1.1**	-1.0
ULTPWRJ	115.0	ULTR.PWR	9.1	1	20.1	98.8	18.3	89.6	**-1.8**	-9.2
LAKEWD-C	115.0	LKWD_JCT	115.0	1	197.4	103.9	195.6	102.8	**-1.8**	-1.1
COLGATE	230.0	COLGATE2	13.8	1	149.8	99.3	147.6	97.2	**-2.2**	-2.1
MELONE1	13.8	MELONES	230.0	1	191.6	99.8	187.8	97.8	**-3.8**	-2.0

Table 8

Power Flows Without and With Cosumnes Generation
2005 Heavy Summer, 560 MW New Generation at Elverta

Rancho Seco to Hedge and Rancho Seco to Elk Grove 230 kV Lines Out

					Cosumnes Generation					
From		To			0 MW		1000 MW		Increase	
Name	kV	Name	kV	ID	MVA	% Rate	MVA	% Rate	**MVA**	% Rate
WARNERVL	230.0	WRNRVLLE	115.0	1	134.0	89.3	153.9	102.6	**19.9**	13.3
WARNERVL	230.0	WRNRVLLE	115.0	2	67.0	89.3	76.9	102.6	**9.9**	13.3
WARNERVL	230.0	WRNRVLLE	115.0	3	67.0	89.3	76.9	102.6	**9.9**	13.3
BRIGHTON	230.0	BRGHTN M	230.0	1	138.3	96.0	146.7	101.9	**8.4**	5.9
ELVRTAX1	230.0	ELVERTA1	69.0	1	125.5	113.3	125.9	113.7	**0.4**	0.4
HNTRSPTD	12.0	HNTRS P1	12.0	1	53.8	99.8	53.9	99.8	**0.1**	0.0
ELVRTAX2	230.0	ELVERTA2	69.0	1	116.2	104.7	116.3	104.8	**0.1**	0.1
BLLTA 1M	230.0	BELLTA T	13.8	1	38.0	100.0	38.0	100.0	**0.0**	0.0
DRUM	115.0	DRUM 5	13.8	1	46.5	99.6	46.5	99.6	**0.0**	0.0
FOLSOM	230.0	FOLSOM2	13.8	1	62.3	98.3	62.3	98.3	**0.0**	0.0
HYATT	230.0	HYATT 1	12.5	1	123.0	99.3	123.0	99.3	**0.0**	0.0
HYATT	230.0	HYATT 2	12.5	1	122.9	99.2	122.9	99.2	**0.0**	0.0
HYATT	230.0	HYATT 3	12.5	1	123.0	99.3	123.0	99.3	**0.0**	0.0
HYATT	230.0	HYATT 4	12.5	1	122.9	99.2	122.9	99.2	**0.0**	0.0
HYATT	230.0	HYATT 5	12.5	1	123.0	99.3	123.0	99.3	**0.0**	0.0
HYATT	230.0	HYATT 6	12.5	1	122.9	99.2	122.9	99.2	**0.0**	0.0
POTRERO	115.0	POTRERO1	12.0	1	67.5	99.3	67.5	99.3	**0.0**	0.0
PRDE JCT	60.0	PRDE 1-3	7.2	1	18.4	98.3	18.4	98.3	**0.0**	0.0
STD. OIL	115.0	ChevGen1	13.8	1	59.6	99.6	59.6	99.6	**0.0**	0.0
STD. OIL	115.0	ChevGen2	13.8	1	59.6	99.6	59.6	99.6	**0.0**	0.0
TOSCO	12.5	FOSTER W	12.5	1	117.1	99.9	117.1	99.9	**0.0**	0.0
OREGON	115.0	OREGON1	12.5	1	22.4	106.7	22.4	106.6	**0.0**	-0.1
CH.STN	115.0	CH.STN.	13.8	1	23.9	98.4	23.8	97.8	**-0.1**	-0.6
DONNELLS	115.0	DONNELLS	13.8	1	65.7	98.2	65.5	97.9	**-0.2**	-0.3
FMC	115.0	FMC CT	12.0	1	50.6	98.5	50.4	97.8	**-0.2**	-0.7
MELONE1	13.8	MELONES	230.0	1	188.5	98.2	188.0	97.9	**-0.5**	-0.3
ULTPWRJ	115.0	ULTR.PWR	9.1	1	20.2	99.6	19.2	94.1	**-1.0**	-5.5
LAKEWD-C	115.0	LKWD_JCT	115.0	1	198.0	104.0	196.4	103.1	**-1.6**	-0.9
PANOCHE	230.0	PNCHE 2M	230.0	2	124.6	102.3	121.3	99.6	**-3.3**	-2.7
PNCHE 2M	230.0	PANOCHE	115.0	2	123.6	101.5	120.2	98.7	**-3.4**	-2.8

Table 9

Power Flows Without and With Cosumnes Generation
2005 Heavy Summer, No New Generation at Elverta

Hurley to Tracy 230 kV Lines 1 and 2 Out

					Cosumnes Generation					
From		To			0 MW		1000 MW		Increase	
Name	kV	Name	kV	ID	MVA	% Rate	MVA	% Rate	**MVA**	% Rate
BRIGHTON	230.0	BRGHTN M	230.0	1	134.8	93.6	142.3	98.8	**7.5**	5.2
HYATT	230.0	HYATT 2	12.5	1	122.8	99.2	122.9	99.2	**0.1**	0.0
HYATT	230.0	HYATT 4	12.5	1	122.8	99.2	122.9	99.2	**0.1**	0.0
HYATT	230.0	HYATT 6	12.5	1	122.8	99.2	122.9	99.2	**0.1**	0.0
BLLTA 1M	230.0	BELLTA T	13.8	1	37.9	100.0	38.0	100.0	**0.1**	0.0
FOLSOM	230.0	FOLSOM2	13.8	1	62.1	98.3	62.2	98.3	**0.1**	0.0
STD. OIL	115.0	ChevGen2	13.8	1	59.5	99.6	59.6	99.6	**0.1**	0.0
HYATT	230.0	HYATT 1	12.5	1	122.9	99.3	123.0	99.3	**0.1**	0.0
HYATT	230.0	HYATT 3	12.5	1	122.9	99.3	123.0	99.3	**0.1**	0.0
HYATT	230.0	HYATT 5	12.5	1	122.9	99.3	123.0	99.3	**0.1**	0.0
CH.STN	115.0	CH.STN.	13.8	1	23.9	98.4	23.9	98.4	**0.0**	0.0
DRUM	115.0	DRUM 5	13.8	1	46.4	99.6	46.4	99.6	**0.0**	0.0
STD. OIL	115.0	ChevGen1	13.8	1	59.5	99.6	59.5	99.6	**0.0**	0.0
TOSCO	12.5	FOSTER W	12.5	1	117.1	99.9	117.1	99.9	**0.0**	0.0
WADHMJCT	60.0	WESCOT2	60.0	1	35.7	101.4	35.7	101.2	**0.0**	-0.2
PRDE JCT	60.0	PRDE 1-3	7.2	1	18.4	98.3	18.3	97.4	**-0.1**	-0.9
FMC	115.0	FMC CT	12.0	1	50.6	98.5	50.3	97.3	**-0.3**	-1.2
POCKET	230.0	POCKET 2	69.0	2	223.8	99.9	223.3	99.7	**-0.5**	-0.2
BLACK	230.0	JBBLACK1	13.8	1	82.6	98.8	82.1	97.7	**-0.5**	-1.1
BLACK	230.0	JBBLACK2	13.8	1	82.6	98.8	82.1	97.7	**-0.5**	-1.1
FRBSTNTP	115.0	FORBSTWN	11.5	1	31.1	101.1	30.6	98.7	**-0.5**	-2.4
ULTPWRJ	115.0	ULTR.PWR	9.1	1	20.2	99.6	18.3	89.6	**-1.9**	-10.0
LAKEWD-C	115.0	LKWD_JCT	115.0	1	198.1	104.3	195.9	102.9	**-2.2**	-1.4
RALSTON	230.0	RALSTON	13.8	1	82.8	98.6	80.5	94.1	**-2.3**	-4.5
PANOCHE	230.0	PNCHE 2M	230.0	2	126.3	103.7	123.9	101.7	**-2.4**	-2.0
PNCHE 2M	230.0	PANOCHE	115.0	2	125.3	102.9	122.9	100.9	**-2.4**	-2.0
MELONE1	13.8	MELONES	230.0	1	191.6	99.8	187.6	97.7	**-4.0**	-2.1
COLGATE	230.0	COLGATE2	13.8	1	151.8	101.2	147.7	97.2	**-4.1**	-4.0

Table 10

Power Flows Without and With Cosumnes Generation
2005 Heavy Summer, 560 MW New Generation at Elverta

Hurley to Tracy 230 kV Lines 1 and 2 Out

					Cosumnes Generation					
From		To			0 MW		1000 MW		Increase	
Name	kV	Name	kV	ID	MVA	% Rate	MVA	% Rate	**MVA**	% Rate
WARNERVL	230.0	WRNRVLLE	115.0	1	124.5	83.0	148.7	99.1	**24.2**	16.1
WARNERVL	230.0	WRNRVLLE	115.0	2	62.3	83.0	74.3	99.1	**12.0**	16.1
WARNERVL	230.0	WRNRVLLE	115.0	3	62.3	83.0	74.3	99.1	**12.0**	16.1
BRIGHTON	230.0	BRGHTN M	230.0	1	135.2	93.9	144.2	100.1	**9.0**	6.2
ELVRTAX1	230.0	ELVERTA1	69.0	1	125.2	113.1	126.0	113.8	**0.8**	0.7
ELVRTAX2	230.0	ELVERTA2	69.0	1	116.1	104.6	116.2	104.7	**0.1**	0.1
HNTRSPTD	12.0	HNTRS P1	12.0	1	53.8	99.8	53.9	99.8	**0.1**	0.0
TOSCO	12.5	FOSTER W	12.5	1	117.1	99.8	117.1	99.9	**0.0**	0.1
FMC	115.0	FMC CT	12.0	1	50.6	98.4	50.6	98.5	**0.0**	0.1
BLLTA 1M	230.0	BELLTA T	13.8	1	38.0	100.0	38.0	100.0	**0.0**	0.0
DRUM	115.0	DRUM 5	13.8	1	46.5	99.6	46.5	99.6	**0.0**	0.0
FOLSOM	230.0	FOLSOM2	13.8	1	62.3	98.3	62.3	98.3	**0.0**	0.0
HYATT	230.0	HYATT 1	12.5	1	123.0	99.3	123.0	99.3	**0.0**	0.0
HYATT	230.0	HYATT 2	12.5	1	122.9	99.2	122.9	99.2	**0.0**	0.0
HYATT	230.0	HYATT 3	12.5	1	123.0	99.3	123.0	99.3	**0.0**	0.0
HYATT	230.0	HYATT 4	12.5	1	122.9	99.2	122.9	99.2	**0.0**	0.0
HYATT	230.0	HYATT 5	12.5	1	123.0	99.3	123.0	99.3	**0.0**	0.0
HYATT	230.0	HYATT 6	12.5	1	122.9	99.2	122.9	99.2	**0.0**	0.0
POTRERO	115.0	POTRERO1	12.0	1	67.5	99.3	67.5	99.3	**0.0**	0.0
PRDE JCT	60.0	PRDE 1-3	7.2	1	18.4	98.3	18.4	98.3	**0.0**	0.0
STD. OIL	115.0	ChevGen1	13.8	1	59.6	99.6	59.6	99.6	**0.0**	0.0
STD. OIL	115.0	ChevGen2	13.8	1	59.6	99.6	59.6	99.6	**0.0**	0.0
OREGON	115.0	OREGON1	12.5	1	22.4	106.7	22.4	106.6	**0.0**	-0.1
CH.STN	115.0	CH.STN.	13.8	1	23.9	98.4	23.8	98.0	**-0.1**	-0.4
DONNELLS	115.0	DONNELLS	13.8	1	65.7	98.4	65.5	98.0	**-0.2**	-0.4
ULTPWRJ	115.0	ULTR.PWR	9.1	1	20.2	99.6	19.2	94.2	**-1.0**	-5.4
LAKEWD-C	115.0	LKWD_JCT	115.0	1	198.4	104.1	196.6	103.2	**-1.8**	-0.9
MELONE1	13.8	MELONES	230.0	1	189.4	98.7	187.6	97.7	**-1.8**	-1.0
PANOCHE	230.0	PNCHE 2M	230.0	2	126.9	104.2	122.6	100.6	**-4.3**	-3.6
PNCHE 2M	230.0	PANOCHE	115.0	2	125.9	103.3	121.5	99.7	**-4.4**	-3.6

Table 11

Power Flows Without and With Cosumnes Generation
2005 Heavy Summer, No New Generation at Elverta

Elverta to Hurley 230 kV Lines 1 and 2 Out

					Cosumnes Generation					
From		To			0 MW		1000 MW		Increase	
Name	kV	Name	kV	ID	MVA	% Rate	MVA	% Rate	**MVA**	% Rate
BRIGHTON	230.0	BRGHTN M	230.0	1	136.7	95.0	143.7	99.8	**7.0**	4.8
HYATT	230.0	HYATT 2	12.5	1	122.8	99.2	122.9	99.2	**0.1**	0.0
HYATT	230.0	HYATT 4	12.5	1	122.8	99.2	122.9	99.2	**0.1**	0.0
HYATT	230.0	HYATT 6	12.5	1	122.8	99.2	122.9	99.2	**0.1**	0.0
BLLTA 1M	230.0	BELLTA T	13.8	1	37.9	100.0	38.0	100.0	**0.1**	0.0
STD. OIL	115.0	ChevGen2	13.8	1	59.5	99.6	59.6	99.6	**0.1**	0.0
ULTPWRJ	115.0	ULTR.PWR	9.1	1	20.1	99.1	20.2	99.7	**0.1**	0.6
FOLSOM	230.0	FOLSOM2	13.8	1	62.2	98.3	62.3	98.3	**0.1**	0.0
HYATT	230.0	HYATT 3	12.5	1	122.9	99.3	123.0	99.3	**0.1**	0.0
HYATT	230.0	HYATT 5	12.5	1	122.9	99.3	123.0	99.3	**0.1**	0.0
FMC	115.0	FMC CT	12.0	1	50.6	98.4	50.6	98.5	**0.0**	0.1
CH.STN	115.0	CH.STN.	13.8	1	23.9	98.4	23.9	98.4	**0.0**	0.0
DRUM	115.0	DRUM 5	13.8	1	46.4	99.6	46.4	99.6	**0.0**	0.0
HYATT	230.0	HYATT 1	12.5	1	122.9	99.3	122.9	99.3	**0.0**	0.0
PRDE JCT	60.0	PRDE 1-3	7.2	1	18.4	98.3	18.4	98.3	**0.0**	0.0
STD. OIL	115.0	ChevGen1	13.8	1	59.5	99.6	59.5	99.6	**0.0**	0.0
TOSCO	12.5	FOSTER W	12.5	1	117.1	99.9	117.1	99.9	**0.0**	0.0
WADHMJCT	60.0	WESCOT2	60.0	1	35.7	101.3	35.7	101.2	**0.0**	-0.1
FRBSTNTP	115.0	FORBSTWN	11.5	1	30.8	99.9	30.6	98.7	**-0.2**	-1.2
POCKET	230.0	POCKET 2	69.0	2	223.5	99.8	223.2	99.7	**-0.3**	-0.1
BLACK	230.0	JBBLACK1	13.8	1	82.4	98.5	82.1	97.7	**-0.3**	-0.8
BLACK	230.0	JBBLACK2	13.8	1	82.4	98.5	82.1	97.7	**-0.3**	-0.8
PANOCHE	230.0	PNCHE 2M	230.0	2	123.0	101.0	122.5	100.6	**-0.5**	-0.4
PNCHE 2M	230.0	PANOCHE	115.0	2	122.1	100.3	121.5	99.8	**-0.6**	-0.5
LAKEWD-C	115.0	LKWD_JCT	115.0	1	197.3	103.8	195.6	102.8	**-1.7**	-1.0
MELONE1	13.8	MELONES	230.0	1	191.6	99.8	188.9	98.4	**-2.7**	-1.4
COLGATE	230.0	COLGATE2	13.8	1	149.7	99.3	146.7	96.2	**-3.0**	-3.1

Table 12

Power Flows Without and With Cosumnes Generation
2005 Heavy Summer, 560 MW New Generation at Elverta

Elverta to Hurley 230 kV Lines 1 and 2 Out

					Cosumnes Generation					
From		To			0 MW		1000 MW		Increase	
Name	kV	Name	kV	ID	MVA	% Rate	MVA	% Rate	**MVA**	% Rate
WARNERVL	230.0	WRNRVLLE	115.0	1	131.6	87.7	149.1	99.4	**17.5**	11.7
WARNERVL	230.0	WRNRVLLE	115.0	3	65.8	87.7	74.6	99.4	**8.8**	11.7
WARNERVL	230.0	WRNRVLLE	115.0	2	65.8	97.7	74.6	99.4	**8.8**	1.7
BRIGHTON	230.0	BRGHTN M	230.0	1	136.7	94.9	144.0	100.0	**7.3**	5.1
ELVRTAX1	230.0	ELVERTA1	69.0	1	125.5	113.3	126.1	113.9	**0.6**	0.6
ELVRTAX2	230.0	ELVERTA2	69.0	1	116.3	104.8	116.4	104.9	**0.1**	0.1
TOSCO	12.5	FOSTER W	12.5	1	117.1	99.8	117.1	99.9	**0.0**	0.1
BLLTA 1M	230.0	BELLTA T	13.8	1	38.0	100.0	38.0	100.0	**0.0**	0.0
DRUM	115.0	DRUM 5	13.8	1	46.5	99.6	46.5	99.6	**0.0**	0.0
FOLSOM	230.0	FOLSOM2	13.8	1	62.3	98.3	62.3	98.3	**0.0**	0.0
HNTRSPTD	12.0	HNTRS P1	12.0	1	53.8	99.8	53.8	99.8	**0.0**	0.0
HYATT	230.0	HYATT 1	12.5	1	123.0	99.3	123.0	99.3	**0.0**	0.0
HYATT	230.0	HYATT 2	12.5	1	122.9	99.2	122.9	99.2	**0.0**	0.0
HYATT	230.0	HYATT 3	12.5	1	123.0	99.3	123.0	99.3	**0.0**	0.0
HYATT	230.0	HYATT 4	12.5	1	122.9	99.2	122.9	99.2	**0.0**	0.0
HYATT	230.0	HYATT 5	12.5	1	123.0	99.3	123.0	99.3	**0.0**	0.0
HYATT	230.0	HYATT 6	12.5	1	122.9	99.2	122.9	99.2	**0.0**	0.0
POTRERO	115.0	POTRERO1	12.0	1	67.5	99.3	67.5	99.3	**0.0**	0.0
PRDE JCT	60.0	PRDE 1-3	7.2	1	18.4	98.3	18.4	98.3	**0.0**	0.0
STD. OIL	115.0	ChevGen1	13.8	1	59.6	99.6	59.6	99.6	**0.0**	0.0
STD. OIL	115.0	ChevGen2	13.8	1	59.6	99.6	59.6	99.6	**0.0**	0.0
OREGON	115.0	OREGON1	12.5	1	22.4	106.7	22.4	106.6	**0.0**	-0.1
CH.STN	115.0	CH.STN.	13.8	1	23.9	98.4	23.8	98.0	**-0.1**	-0.4
DONNELLS	115.0	DONNELLS	13.8	1	65.7	98.3	65.5	98.0	**-0.2**	-0.3
FMC	115.0	FMC CT	12.0	1	50.6	98.5	50.4	97.8	**-0.2**	-0.7
ULTPWRJ	115.0	ULTR.PWR	9.1	1	20.2	99.6	19.2	94.3	**-1.0**	-5.3
MELONE1	13.8	MELONES	230.0	1	188.9	98.4	187.6	97.7	**-1.3**	-0.7
LAKEWD-C	115.0	LKWD_JCT	115.0	1	198.0	104.0	196.4	103.1	**-1.6**	-0.9
PANOCHE	230.0	PNCHE 2M	230.0	2	125.3	102.8	122.5	100.6	**-2.8**	-2.2
PNCHE 2M	230.0	PANOCHE	115.0	2	124.3	102.0	121.4	99.7	**-2.9**	-2.3

Table 13

Power Flows Without and With Cosumnes Generation
2005 Heavy Summer, No New Generation at Elverta

O'Banion to Elverta 230 kV Lines 1 and 2 Out

					Cosumnes Generation					
From		To			0 MW		1000 MW		Increase	
Name	kV	Name	kV	ID	MVA	% Rate	MVA	% Rate	**MVA**	% Rate
BRIGHTON	230.0	BRGHTN M	230.0	1	136.0	94.4	142.9	99.2	**6.9**	4.8
HYATT	230.0	HYATT 2	12.5	1	122.8	99.2	122.9	99.2	**0.1**	0.0
HYATT	230.0	HYATT 4	12.5	1	122.8	99.2	122.9	99.2	**0.1**	0.0
HYATT	230.0	HYATT 6	12.5	1	122.8	99.2	122.9	99.2	**0.1**	0.0
BLLTA 1M	230.0	BELLTA T	13.8	1	37.9	100.0	38.0	100.0	**0.1**	0.0
FOLSOM	230.0	FOLSOM2	13.8	1	62.1	98.3	62.2	98.3	**0.1**	0.0
STD. OIL	115.0	ChevGen2	13.8	1	59.5	99.6	59.6	99.6	**0.1**	0.0
HYATT	230.0	HYATT 3	12.5	1	122.9	99.3	123.0	99.3	**0.1**	0.0
HYATT	230.0	HYATT 5	12.5	1	122.9	99.3	123.0	99.3	**0.1**	0.0
TOSCO	12.5	FOSTER W	12.5	1	117.1	99.8	117.1	99.9	**0.0**	0.1
CH.STN	115.0	CH.STN.	13.8	1	23.9	98.4	23.9	98.4	**0.0**	0.0
DRUM	115.0	DRUM 5	13.8	1	46.4	99.6	46.4	99.6	**0.0**	0.0
HYATT	230.0	HYATT 1	12.5	1	122.9	99.3	122.9	99.3	**0.0**	0.0
STD. OIL	115.0	ChevGen1	13.8	1	59.5	99.6	59.5	99.6	**0.0**	0.0
WADHMJCT	60.0	WESCOT2	60.0	1	35.7	101.6	35.7	101.3	**0.0**	-0.3
PRDE JCT	60.0	PRDE 1-3	7.2	1	18.4	98.3	18.3	97.5	**-0.1**	-0.8
FMC	115.0	FMC CT	12.0	1	50.6	98.5	50.5	98.0	**-0.1**	-0.5
POCKET	230.0	POCKET 2	69.0	2	223.7	99.9	223.3	99.7	**-0.4**	-0.2
BLACK	230.0	JBBLACK1	13.8	1	82.6	98.9	82.2	98.0	**-0.4**	-0.9
BLACK	230.0	JBBLACK2	13.8	1	82.6	98.9	82.2	98.0	**-0.4**	-0.9
FRBSTNTP	115.0	FORBSTWN	11.5	1	31.0	100.7	30.6	98.9	**-0.4**	-1.8
PANOCHE	230.0	PNCHE 2M	230.0	2	123.6	101.5	122.9	100.9	**-0.7**	-0.6
PNCHE 2M	230.0	PANOCHE	115.0	2	122.7	100.8	121.9	100.1	**-0.8**	-0.7
ULTPWRJ	115.0	ULTR.PWR	9.1	1	20.2	99.6	18.5	90.5	**-1.7**	-9.1
LAKEWD-C	115.0	LKWD_JCT	115.0	1	197.3	103.9	195.5	102.8	**-1.8**	-1.1
COLGATE	230.0	COLGATE2	13.8	1	151.0	100.4	147.9	97.5	**-3.1**	-2.9
MELONE1	13.8	MELONES	230.0	1	191.6	99.8	187.8	97.8	**-3.8**	-2.0
SUTTER	230.0	ELVERTAW	230.0	1	749.6	103.2	675.6	92.0	**-74.0**	-11.2

Table 14

Power Flows Without and With Cosumnes Generation
2005 Heavy Summer, 560 MW New Generation at Elverta

O'Banion to Elverta 230 kV Lines 1 and 2 Out

					Cosumnes Generation					
From		To			0 MW		1000 MW		Increase	
Name	kV	Name	kV	ID	MVA	% Rate	MVA	% Rate	**MVA**	% Rate
WARNERVL	230.0	WRNRVLLE	115.0	1	129.2	86.1	147.8	98.5	**18.6**	12.4
WARNERVL	230.0	WRNRVLLE	115.0	2	64.6	86.1	73.9	98.5	**9.3**	12.4
WARNERVL	230.0	WRNRVLLE	115.0	3	64.6	86.1	73.9	98.5	**9.3**	12.4
BRIGHTON	230.0	BRGHTN M	230.0	1	136.0	94.5	143.5	99.7	**7.5**	5.2
ELVRTAX1	230.0	ELVERTA1	69.0	1	125.2	113.0	126.0	113.8	**0.8**	0.8
ELVRTAX2	230.0	ELVERTA2	69.0	1	116.1	104.6	116.2	104.7	**0.1**	0.1
HYATT	230.0	HYATT 1	12.5	1	122.9	99.3	123.0	99.3	**0.1**	0.0
BLLTA 1M	230.0	BELLTA T	13.8	1	38.0	100.0	38.0	100.0	**0.0**	0.0
DRUM	115.0	DRUM 5	13.8	1	46.5	99.6	46.5	99.6	**0.0**	0.0
FOLSOM	230.0	FOLSOM2	13.8	1	62.3	98.3	62.3	98.3	**0.0**	0.0
HYATT	230.0	HYATT 2	12.5	1	122.9	99.2	122.9	99.2	**0.0**	0.0
HYATT	230.0	HYATT 3	12.5	1	123.0	99.3	123.0	99.3	**0.0**	0.0
HYATT	230.0	HYATT 4	12.5	1	122.9	99.2	122.9	99.2	**0.0**	0.0
HYATT	230.0	HYATT 5	12.5	1	123.0	99.3	123.0	99.3	**0.0**	0.0
HYATT	230.0	HYATT 6	12.5	1	122.9	99.2	122.9	99.2	**0.0**	0.0
POTRERO	115.0	POTRERO1	12.0	1	67.5	99.3	67.5	99.3	**0.0**	0.0
PRDE JCT	60.0	PRDE 1-3	7.2	1	18.4	98.3	18.4	98.3	**0.0**	0.0
STD. OIL	115.0	ChevGen1	13.8	1	59.6	99.6	59.6	99.6	**0.0**	0.0
STD. OIL	115.0	ChevGen2	13.8	1	59.6	99.6	59.6	99.6	**0.0**	0.0
TOSCO	12.5	FOSTER W	12.5	1	117.1	99.9	117.1	99.9	**0.0**	0.0
CH.STN	115.0	CH.STN.	13.8	1	23.9	98.4	23.9	98.3	**0.0**	-0.1
OREGON	115.0	OREGON1	12.5	1	22.4	106.7	22.4	106.6	**0.0**	-0.1
HNTRSPTD	12.0	HNTRS P1	12.0	1	53.9	99.9	53.8	99.8	**-0.1**	-0.1
FMC	115.0	FMC CT	12.0	1	50.6	98.5	50.5	98.0	**-0.1**	-0.5
DONNELLS	115.0	DONNELLS	13.8	1	65.7	98.4	65.5	98.0	**-0.2**	-0.4
ULTPWRJ	115.0	ULTR.PWR	9.1	1	20.2	99.6	19.3	94.8	**-0.9**	-4.8
LAKEWD-C	115.0	LKWD_JCT	115.0	1	198.0	104.0	196.4	103.1	**-1.6**	-0.9
MELONE1	13.8	MELONES	230.0	1	189.4	98.7	187.7	97.8	**-1.7**	-0.9
PANOCHE	230.0	PNCHE 2M	230.0	2	125.6	103.1	122.8	100.8	**-2.8**	-2.3
PNCHE 2M	230.0	PANOCHE	115.0	2	124.6	102.3	121.8	100.0	**-2.8**	-2.3

Table 15

Power Flows Without and With Cosumnes Generation
2004 Spring, No New Generation at Elverta

No New Generation at Elverta					Rancho Seco Generation					
From		To			0 MW		1000 MW		Increase	
Name	kV	Name	kV	ID	MVA	% Rate	MVA	% Rate	**MVA**	% Rate
RVRBKJCT	115.0	MANTECA	115.0	1	53.6	76.4	70.4	100.1	**16.8**	23.7
WLLW SLJ	60.0	KNGHTSLJ	60.0	1	15.2	94.2	15.9	98.5	**0.7**	4.3
KRN OL M	70.0	KERN OIL	11.0	1	5.5	109.0	5.8	115.2	**0.3**	6.2
TAFT M	115.0	TAFT	12.5	1	10.6	150.9	10.6	150.9	**0.0**	0.0
SPICER	21.0	NEWSPICE	4.2	1	5.0	99.6	5.0	99.6	**0.0**	0.0
MID CTY3	22.0	UCDMC	22.0	1	23.1	99.0	23.1	99.9	**0.0**	0.9
MNDTA TP	115.0	MENDOTA	70.0	1	18.9	151.5	18.7	149.7	**-0.2**	-1.8
TWISSLMN	70.0	TX-LOSTH	9.1	1	10.9	99.5	10.4	94.8	**-0.5**	-4.7
WITCO	115.0	GOLD.BER	9.1	1	19.1	121.5	18.5	117.9	**-0.6**	-3.6

Table 16

Power Flows Without and With Cosumnes Generation
2004 Spring, 560 MW New Generation at Elverta

560 MW New Generation at Elverta					Rancho Seco Generation					
From		To			0 MW		1000 MW		Increase	
Name	kV	Name	kV	ID	MVA	% Rate	MVA	% Rate	**MVA**	% Rate
RVRBKJCT	115.0	MANTECA	115.0	1	58.2	82.9	75.1	106.9	**16.9**	24.0
WESTLEY	230.0	TRCY PMP	230.0	1	348.0	97.4	361.5	101.9	**13.5**	4.5
KRN OL M	70.0	KERN OIL	11.0	1	5.6	111.6	6.0	119.4	**0.4**	7.8
WLLW SLJ	60.0	KNGHTSLJ	60.0	1	15.3	95.0	16.1	100.0	**0.8**	5.0
TAFT M	115.0	TAFT	12.5	1	10.6	150.9	10.6	150.9	**0.0**	0.0
SPICER	21.0	NEWSPICE	4.2	1	5.0	99.6	5.0	99.6	**0.0**	0.0
MID CTY3	22.0	UCDMC	22.0	1	23.1	99.6	23.1	100.4	**0.0**	0.8
MNDTA TP	115.0	MENDOTA	70.0	1	18.8	150.7	18.7	149.4	**-0.1**	-1.3
WITCO	115.0	GOLD.BER	9.1	1	18.8	120.0	18.3	116.6	**-0.5**	-3.4

Table 17

Power Flows Without and With Cosumnes Generation
2004 Spring, No New Generation at Elverta

Rancho Seco to Bellota 230 kV Lines 1 and 2 Out

					Rancho Seco Generation					
From		To			0 MW		1000 MW		Increase	
Name	kV	Name	kV	ID	MVA	% Rate	MVA	% Rate	**MVA**	% Rate
HURLEY S	230.0	PROCTER	230.0	1	65.4	15.2	590.1	139.7	**524.7**	124.5
HEDGE	230.0	PROCTER	230.0	1	95.7	22.2	445.6	104.8	**349.9**	82.6
HURLEY W	230.0	TRCY PMP	230.0	2	128.2	39.7	365.4	115.6	**237.2**	75.9
HURLEY W	230.0	TRCY PMP	230.0	1	125.5	38.9	357.0	113.0	**231.5**	74.1
WESTLEY	230.0	TRCY PMP	230.0	1	334.7	93.3	408.9	115.4	**74.2**	22.1
KRN OL M	70.0	KERN OIL	11.0	1	5.4	108.9	5.7	114.8	**0.3**	5.9
MNDTA TP	115.0	MENDOTA	70.0	1	19.0	151.7	19.0	151.7	**0.0**	0.0
TAFT M	115.0	TAFT	12.5	1	10.6	150.9	10.6	150.9	**0.0**	0.0
SPICER	21.0	NEWSPICE	4.2	1	5.0	99.6	5.0	99.6	**0.0**	0.0
TWISSLMN	70.0	TX-LOSTH	9.1	1	10.9	99.5	10.5	95.0	**-0.4**	-4.5
MID CTY3	22.0	UCDMC	22.0	1	23.1	99.2	22.7	99.0	**-0.4**	-0.2
WITCO	115.0	GOLD.BER	9.1	1	19.1	121.5	18.6	118.4	**-0.5**	-3.1

Table 18

Power Flows Without and With Cosumnes Generation
2004 Spring, 560 MW New Generation at Elverta

Rancho Seco to Bellota 230 kV Lines 1 and 2 Out

					Rancho Seco Generation					
From		To			0 MW		1000 MW		Increase	
Name	kV	Name	kV	ID	MVA	% Rate	MVA	% Rate	**MVA**	% Rate
HURLEY S	230.0	PROCTER	230.0	1	67.5	15.8	577.5	138.4	**510.0**	122.6
HEDGE	230.0	PROCTER	230.0	1	108.6	25.3	432.4	102.4	**323.8**	77.1
HURLEY W	230.0	TRCY PMP	230.0	1	256.0	79.9	497.3	159.3	**241.3**	79.4
HURLEY W	230.0	TRCY PMP	230.0	2	262.0	81.7	485.7	155.5	**223.7**	73.8
COTWDPGE	230.0	COTWDWAP	230.0	1	395.6	77.7	513.3	101.5	**117.7**	23.8
WESTLEY	230.0	TRCY PMP	230.0	1	378.7	106.4	448.2	127.8	**69.5**	21.4
KRN OL M	70.0	KERN OIL	11.0	1	5.6	111.1	5.9	118.0	**0.3**	6.9
MNDTA TP	115.0	MENDOTA	70.0	1	18.9	151.4	18.9	151.4	**0.0**	0.0
TAFT M	115.0	TAFT	12.5	1	10.6	150.9	10.6	150.9	**0.0**	0.0
SPICER	21.0	NEWSPICE	4.2	1	5.0	99.6	5.0	99.6	**0.0**	0.0
WITCO	115.0	GOLD.BER	9.1	1	18.9	120.5	18.6	118.3	**-0.3**	-2.2
MID CTY3	22.0	UCDMC	22.0	1	23.1	99.9	22.2	96.5	**-0.9**	-3.4

Base Case Title:

rs05hs00, 2005 Heavy Summer Cosumnes Generation Study Case
No Cosumnes Generation Plant, No FPLE Generation Plant
From Western FPLE Study Case 05hs-no-fple

Transfer Schedule Case Title:

rs05hs00, 2005 Heavy Summer Cosumnes Generation Study Case
No Cosumnes Generation Plant, No FPLE Generation Plant
From Western FPLE Study Case 05hs-no-fple
100 MW INCREMENTAL SCHEDULE INTO SMUD/ROSEVILLE LOAD AREA

No non-rated lines were identified.

1 overloaded lines were detected:

From Bus	To Bus	ID	Sens.	Percent Overload	
BRGHTN M 230	BRIGHTN 115	1	-0.0050	11.7%	Overload

8 forward schedule normal limits were detected:

From Bus	To Bus	ID	Sens.	Schedule MW Limit
HURLEY W 230	TRCY PMP 230	2	-0.1680	523
HURLEY W 230	TRCY PMP 230	1	-0.1680	549
CARMICAL 230	HURLEY S 230	1	-0.1010	916
BELLOTA 230	RNCHSECO 230	1	0.2140	959
BELLOTA 230	RNCHSECO 230	2	0.2140	959
GOLDHILL 230	LAKE 230	1	0.1120	1236
HURLEY 115	HURLEY S 230	1	-0.0400	1403
COTWDWAP 230	ROSEVILL 230	1	0.0580	1908

20 forward schedule outage limits were found:

Limiting Element			Outage					Schedule	
From Bus	To Bus	ID	From Bus	To Bus	ID	Sens.	MW Limit		
ELVERTAW 230	OBANION 230	1	ELVERTAW 230	OBANION 230	2	-0.0575	-5.8%	Overload	
ELVERTAW 230	OBANION 230	2	ELVERTAW 230	OBANION 230	1	-0.0575	-5.8%	Overload	
ATLANTC 230	RIO OSO 230	1	GOLDHILL 230	RIO OSO 230	1	-0.0221	-5.1%	Overload	
HURLEY 115	HURLEY S 230	1	HEDGE 230	PROCTER 230	1	-0.0391	110		
HURLEY 115	HURLEY S 230	1	ELVERTAS 115	NORTHCTY 115	1	-0.0413	559		
HURLEY 115	HURLEY S 230	1	EAST CTY 115	HEDGE 115	1	-0.0491	750		
HURLEY 115	HURLEY S 230	1	HURLEY S 230	PROCTER 230	1	-0.0391	828		
HURLEY 115	HURLEY S 230	1	HEDGE 115	HEDGE 230	6	-0.0460	923		
HURLEY W 230	TRCY PMP 230	2	HURLEY W 230	TRCY PMP 230	1	-0.2121	129		
HURLEY W 230	TRCY PMP 230	2	COTWDWAP 230	ROSEVILL 230	1	-0.1778	293		
HURLEY W 230	TRCY PMP 230	2	BELLOTA 230	RNCHSECO 230	1	-0.1896	312		
HURLEY W 230	TRCY PMP 230	2	BELLOTA 230	RNCHSECO 230	2	-0.1896	312		
HURLEY W 230	TRCY PMP 230	2	GOLDHILL 230	LAKE 230	1	-0.1871	331		

HURLEY W	230	TRCY PMP	230	1	HURLEY W	230	TRCY PMP	230	2	-0.2124	142
HURLEY W	230	TRCY PMP	230	1	COTWDWAP	230	ROSEVILL	230	1	-0.1776	322
HURLEY W	230	TRCY PMP	230	1	BELLOTA	230	RNCHSECO	230	1	-0.1893	338
HURLEY W	230	TRCY PMP	230	1	BELLOTA	230	RNCHSECO	230	2	-0.1893	338
HURLEY W	230	TRCY PMP	230	1	GOLDHILL	230	LAKE	230	1	-0.1868	358
GOLDHILL	230	RIO OSO	230	1	ATLANTC	230	RIO OSO	230	1	-0.0221	202
BELLOTA	230	RNCHSECO	230	1	BELLOTA	230	RNCHSECO	230	2	0.3492	346
BELLOTA	230	RNCHSECO	230	2	BELLOTA	230	RNCHSECO	230	1	0.3492	346
CARMICAL	230	HURLEY S	230	1	ELVERTAS	230	FOOTHILL	230	1	-0.1258	420
CARMICAL	230	HURLEY S	230	1	HEDGE	230	PROCTER	230	1	-0.0993	421
CARMICAL	230	HURLEY S	230	1	ELVERTAS	230	ORANGEVL	230	1	-0.1135	560
CARMICAL	230	HURLEY S	230	1	GOLDHILL	230	LAKE	230	1	-0.1407	609
CARMICAL	230	HURLEY S	230	1	ORANGEVL	230	WHITEROK	230	1	-0.1043	723
EAST CTY	115	HEDGE	115	1	HURLEY	115	HURLEY S	230	1	-0.0505	1069
EAST CTY	115	HEDGE	115	1	SOUTHCTY	115	STA. B	115	1	-0.0501	1665
HEDGE	115	SOUTHCTY	115	1	HEDGE	115	SOUTHCTY	115	2	0.0334	1147
HEDGE	115	SOUTHCTY	115	1	EAST CTY	115	HEDGE	115	1	0.0317	1438
HEDGE	115	SOUTHCTY	115	1	HURLEY	115	HURLEY S	230	1	0.0264	1862
HEDGE	115	SOUTHCTY	115	2	HEDGE	115	SOUTHCTY	115	1	0.0334	1147
HEDGE	115	SOUTHCTY	115	2	EAST CTY	115	HEDGE	115	1	0.0317	1438
HEDGE	115	SOUTHCTY	115	2	HURLEY	115	HURLEY S	230	1	0.0264	1862
GOLDHILL	230	LAKE	230	1	HURLEY W	230	TRCY PMP	230	2	0.1319	1185
GOLDHILL	230	LAKE	230	1	HURLEY W	230	TRCY PMP	230	1	0.1316	1196
GOLDHILL	230	LAKE	230	1	BELLOTA	230	RNCHSECO	230	1	0.1310	1214
GOLDHILL	230	LAKE	230	1	BELLOTA	230	RNCHSECO	230	2	0.1310	1214
COTWDWAP	230	ROSEVILL	230	1	HURLEY W	230	TRCY PMP	230	2	0.0704	1325
COTWDWAP	230	ROSEVILL	230	1	HURLEY W	230	TRCY PMP	230	1	0.0703	1334
COTWDWAP	230	ROSEVILL	230	1	BELLOTA	230	RNCHSECO	230	1	0.0653	1546
COTWDWAP	230	ROSEVILL	230	1	BELLOTA	230	RNCHSECO	230	2	0.0653	1546
COTWDWAP	230	ROSEVILL	230	1	GOLDHILL	230	LAKE	230	1	0.0651	1553
HEDGE	115	HEDGE	230	4	HEDGE	115	HEDGE	230	6	-0.0393	1599
HEDGE	115	HEDGE	230	4	HURLEY	115	HURLEY S	230	1	-0.0337	1930
HEDGE	115	HEDGE	230	2	HEDGE	115	HEDGE	230	6	-0.0306	1661
BELLOTA	230	COTTLE B	230	1	TESLA E	230	WEBER	230	1	-0.1162	1796
BELLOTA	230	COTTLE B	230	1	BELLOTA	230	TESLA E	230	1	-0.1157	1889
BELLOTA	230	COTTLE B	230	1	BELLOTA	230	COTTLE A	230	1	-0.1161	1927
BELLOTA	230	COTTLE B	230	1	CARMICAL	230	ORANGEVL	230	1	-0.1240	1946
HEDGE	115	HEDGE	230	6	HURLEY	115	HURLEY S	230	1	-0.0456	1822
ELVERTAS	230	FOOTHILL	230	1	CARMICAL	230	HURLEY S	230	1	0.0717	1843

Base Case Title:

rs05hs10, 2005 Heavy Summer Cosumnes Generation Study Case
Cosumnes Generation = 1000 MW, No FPLE Generation Plant
From Western FPLE Study Case 05hs-no-fple

Transfer Schedule Case Title:

rs05hs10, 2005 Heavy Summer Cosumnes Generation Study Case
Cosumnes Generation = 1000 MW, No FPLE Generation Plant
From Western FPLE Study Case 05hs-no-fple
100 MW INCREMENTAL SCHEDULE INTO SMUD/ROSEVILLE LOAD AREA

No non-rated lines were identified.

1 overloaded lines were detected:

From Bus	To Bus	ID	Sens.	Percent Overload	
BRGHTN M 230	BRIGHTN 115	1	-0.0060	17.8%	Overload

8 forward schedule normal limits were detected:

From Bus	To Bus	ID	Sens.	Schedule MW Limit
CARMICAL 230	HURLEY S 230	1	-0.1020	1188
HURLEY W 230	TRCY PMP 230	2	-0.1650	1275
HURLEY W 230	TRCY PMP 230	1	-0.1620	1310
EAST CTY 115	HEDGE 115	1	-0.0350	1417
ELKGROVE 230	RNCHSECO 230	1	-0.1410	1735
HEDGE 115	SOUTHCTY 115	1	0.0210	1903
HEDGE 115	SOUTHCTY 115	2	0.0210	1903
GOLDHILL 230	LAKE 230	1	0.1100	1952

20 forward schedule outage limits were found:

Limiting Element			Outage				Schedule	
From Bus	To Bus	ID	From Bus	To Bus	ID	Sens.	MW Limit	
ATLANTC 230	RIO OSO 230	1	GOLDHILL 230	RIO OSO 230	1	-0.0237	-3.4%	Overload
ELVERTAW 230	OBANION 230	1	ELVERTAW 230	OBANION 230	2	-0.0589	394	
ELVERTAW 230	OBANION 230	2	ELVERTAW 230	OBANION 230	1	-0.0589	394	
GOLDHILL 230	RIO OSO 230	1	ATLANTC 230	RIO OSO 230	1	-0.0237	443	
HEDGE 115	SOUTHCTY 115	1	HEDGE 115	SOUTHCTY 115	2	0.0335	552	
HEDGE 115	SOUTHCTY 115	1	EAST CTY 115	HEDGE 115	1	0.0312	796	
HEDGE 115	SOUTHCTY 115	1	HURLEY 115	HURLEY S 230	1	0.0266	1538	
HEDGE 115	SOUTHCTY 115	2	HEDGE 115	SOUTHCTY 115	1	0.0335	552	
HEDGE 115	SOUTHCTY 115	2	EAST CTY 115	HEDGE 115	1	0.0312	796	
HEDGE 115	SOUTHCTY 115	2	HURLEY 115	HURLEY S 230	1	0.0266	1538	

CARMICAL	230	HURLEY S	230	1	ELVERTAS	230	FOOTHILL	230	1	-0.1269	701
CARMICAL	230	HURLEY S	230	1	ELVERTAS	230	ORANGEVL	230	1	-0.1152	907
CARMICAL	230	HURLEY S	230	1	ORANGEVL	230	WHITEROK	230	1	-0.1053	915
CARMICAL	230	HURLEY S	230	1	GOLDHILL	230	LAKE	230	1	-0.1411	996
EAST CTY	115	HEDGE	115	1	HURLEY	115	HURLEY S	230	1	-0.0487	729
EAST CTY	115	HEDGE	115	1	SOUTHCTY	115	STA. B	115	1	-0.0475	838
HURLEY W	230	TRCY PMP	230	2	HURLEY W	230	TRCY PMP	230	1	-0.2076	869
HURLEY W	230	TRCY PMP	230	2	COTWDWAP	230	ROSEVILL	230	1	-0.1751	1040
HURLEY W	230	TRCY PMP	230	2	GOLDHILL	230	LAKE	230	1	-0.1834	1075
HURLEY W	230	TRCY PMP	230	2	ELKGROVE	230	RNCHSECO	230	1	-0.1713	1133
HURLEY W	230	TRCY PMP	230	2	BELLOTA	230	RNCHSECO	230	1	-0.1845	1143
HURLEY W	230	TRCY PMP	230	1	HURLEY W	230	TRCY PMP	230	2	-0.2051	888
HURLEY W	230	TRCY PMP	230	1	COTWDWAP	230	ROSEVILL	230	1	-0.1718	1076
HURLEY W	230	TRCY PMP	230	1	GOLDHILL	230	LAKE	230	1	-0.1798	1109
HURLEY W	230	TRCY PMP	230	1	ELKGROVE	230	RNCHSECO	230	1	-0.1682	1167
HURLEY W	230	TRCY PMP	230	1	BELLOTA	230	RNCHSECO	230	1	-0.1815	1172
HEDGE	115	HEDGE	230	4	HEDGE	115	HEDGE	230	6	-0.0379	933
HEDGE	115	HEDGE	230	4	HURLEY	115	HURLEY S	230	1	-0.0329	1589
HEDGE	115	HEDGE	230	4	HEDGE	115	HEDGE	230	2	-0.0312	1799
HEDGE	115	HEDGE	230	2	HEDGE	115	HEDGE	230	6	-0.0303	958
HEDGE	115	HEDGE	230	2	HEDGE	115	HEDGE	230	4	-0.0266	1518
HEDGE	115	HEDGE	230	2	HURLEY	115	HURLEY S	230	1	-0.0263	1613
HURLEY	115	HURLEY S	230	1	EAST CTY	115	HEDGE	115	1	-0.0496	1141
HURLEY	115	HURLEY S	230	1	HEDGE	115	HEDGE	230	6	-0.0469	1397
HURLEY	115	HURLEY S	230	1	ELVERTAS	115	NORTHCTY	115	1	-0.0428	1485
HURLEY	115	HURLEY S	230	1	SOUTHCTY	115	STA. B	115	1	-0.0454	1572
HURLEY	115	HURLEY S	230	1	HEDGE	115	HEDGE	230	4	-0.0448	1611
ELKGROVE	230	RNCHSECO	230	1	HEDGE	230	RNCHSECO	230	1	-0.1846	1300
HEDGE	115	HEDGE	230	6	HEDGE	115	HEDGE	230	4	-0.0454	1365
HEDGE	115	HEDGE	230	6	HURLEY	115	HURLEY S	230	1	-0.0449	1460
HEDGE	115	HEDGE	230	6	HEDGE	115	HEDGE	230	2	-0.0426	1663
SOUTHCTY	115	STA. B	115	1	EAST CTY	115	HEDGE	115	1	0.0411	1509
BELLOTA	230	RNCHSECO	230	1	BELLOTA	230	RNCHSECO	230	2	0.3478	1726
BELLOTA	230	RNCHSECO	230	2	BELLOTA	230	RNCHSECO	230	1	0.3478	1726
HEDGE	230	RNCHSECO	230	1	ELKGROVE	230	RNCHSECO	230	1	-0.1662	1834
GOLDHILL	230	LAKE	230	1	HURLEY W	230	TRCY PMP	230	2	0.1297	1908
GOLDHILL	230	LAKE	230	1	HURLEY W	230	TRCY PMP	230	1	0.1291	1920

Base Case Title:

rs05hs01, 2005 Heavy Summer Cosumnes Generation Study Case
No Cosumnes Generation Plant, FPLE Generation = 560 MW
From Western FPLE Study Case 05s-pgepeak_fplesrev1

Transfer Schedule Case Title:

rs05hs01, 2005 Heavy Summer Cosumnes Generation Study Case
No Cosumnes Generation Plant, FPLE Generation = 560 MW
From Western FPLE Study Case 05s-pgepeak_fplesrev1
100 MW INCREMENTAL SCHEDULE INTO SMUD/ROSEVILLE LOAD AREA

No non-rated lines were identified.

2 overloaded lines were detected:

From Bus	To Bus	ID	Sens.	Percent Overload	
BRGHTN M 230	BRIGHTN 115	1	-0.0060	7.0%	Overload
HEDGE 230	PROCTER 230	1	-0.0010	-28.8%	Overload

7 forward schedule normal limits were detected:

From Bus	To Bus	ID	Sens.	Schedule MW Limit
CARMICAL 230	HURLEY S 230	1	-0.1020	976
HURLEY W 230	TRCY PMP 230	2	-0.1640	1193
HURLEY W 230	TRCY PMP 230	1	-0.1610	1231
HURLEY 115	HURLEY S 230	1	-0.0410	1232
BELLOTA 230	RNCHSECO 230	1	0.2070	1486
BELLOTA 230	RNCHSECO 230	2	0.2070	1486
GOLDHILL 230	LAKE 230	1	0.1110	1661

20 forward schedule outage limits were found:

Limiting Element			Outage					Schedule	
From Bus	To Bus	ID	From Bus	To Bus	ID	Sens.	MW Limit		
HURLEY 115	HURLEY S 230	1	HEDGE 230	PROCTER 230	1	-0.0412	-10.3%	Overload	
HURLEY 115	HURLEY S 230	1	ELVERTAS 115	NORTHCTY 115	1	-0.0432	74		
HURLEY 115	HURLEY S 230	1	HURLEY S 230	PROCTER 230	1	-0.0412	172		
HURLEY 115	HURLEY S 230	1	EAST CTY 115	HEDGE 115	1	-0.0499	720		
HURLEY 115	HURLEY S 230	1	HEDGE 115	HEDGE 230	6	-0.0469	846		
ELVERTAW 230	HURLEY W 230	2	ELVERTAS 230	HURLEY S 230	3	-0.0270	4.6%	Overload	
ELVERTAW 230	HURLEY W 230	2	ELVERTAW 230	HURLEY W 230	1	-0.0283	4.3%	Overload	
ELVERTAW 230	HURLEY W 230	1	ELVERTAW 230	HURLEY W 230	2	-0.0275	1.9%	Overload	
ELVERTAW 230	HURLEY W 230	1	ELVERTAS 230	HURLEY S 230	3	-0.0258	1.0%	Overload	
CARMICAL 230	HURLEY S 230	1	HEDGE 230	PROCTER 230	1	-0.1023	134		
CARMICAL 230	HURLEY S 230	1	ELVERTAS 230	FOOTHILL 230	1	-0.1273	334		
CARMICAL 230	HURLEY S 230	1	ELVERTAS 230	ORANGEVL 230	1	-0.1151	353		
CARMICAL 230	HURLEY S 230	1	HURLEY S 230	PROCTER 230	1	-0.1023	645		
CARMICAL 230	HURLEY S 230	1	GOLDHILL 230	LAKE 230	1	-0.1415	759		

ELVERTAW	230	OBANION	230	1	ELVERTAW	230	OBANION	230	2	-0.0604	468
ELVERTAW	230	OBANION	230	2	ELVERTAW	230	OBANION	230	1	-0.0604	468
ATLANTC	230	RIO OSO	230	1	GOLDHILL	230	RIO OSO	230	1	-0.0237	727
HURLEY W	230	TRCY PMP	230	2	HURLEY W	230	TRCY PMP	230	1	-0.2059	788
HURLEY W	230	TRCY PMP	230	2	BELLOTA	230	RNCHSECO	230	1	-0.1845	959
HURLEY W	230	TRCY PMP	230	2	BELLOTA	230	RNCHSECO	230	2	-0.1845	959
HURLEY W	230	TRCY PMP	230	2	COTWDWAP	230	ROSEVILL	230	1	-0.1743	966
HURLEY W	230	TRCY PMP	230	2	GOLDHILL	230	LAKE	230	1	-0.1823	971
HURLEY W	230	TRCY PMP	230	1	HURLEY W	230	TRCY PMP	230	2	-0.2035	808
HURLEY W	230	TRCY PMP	230	1	BELLOTA	230	RNCHSECO	230	1	-0.1811	993
HURLEY W	230	TRCY PMP	230	1	BELLOTA	230	RNCHSECO	230	2	-0.1811	993
HURLEY W	230	TRCY PMP	230	1	COTWDWAP	230	ROSEVILL	230	1	-0.1710	1003
HURLEY W	230	TRCY PMP	230	1	GOLDHILL	230	LAKE	230	1	-0.1789	1006
BELLOTA	230	RNCHSECO	230	1	BELLOTA	230	RNCHSECO	230	2	0.3374	845
BELLOTA	230	RNCHSECO	230	2	BELLOTA	230	RNCHSECO	230	1	0.3374	845
ELVERTAS	230	FOOTHILL	230	1	CARMICAL	230	HURLEY S	230	1	0.0731	1443
EAST CTY	115	HEDGE	115	1	HURLEY	115	HURLEY S	230	1	-0.0498	1504
ELVERTAS	230	ORANGEVL	230	1	CARMICAL	230	HURLEY S	230	1	0.0614	1543
GOLDHILL	230	RIO OSO	230	1	ATLANTC	230	RIO OSO	230	1	-0.0237	1590
HEDGE	115	SOUTHCTY	115	1	HEDGE	115	SOUTHCTY	115	2	0.0334	1646
HEDGE	115	SOUTHCTY	115	1	EAST CTY	115	HEDGE	115	1	0.0314	1994
HEDGE	115	SOUTHCTY	115	2	HEDGE	115	SOUTHCTY	115	1	0.0334	1646
HEDGE	115	SOUTHCTY	115	2	EAST CTY	115	HEDGE	115	1	0.0314	1994
GOLDHILL	230	LAKE	230	1	HURLEY W	230	TRCY PMP	230	2	0.1305	1654
GOLDHILL	230	LAKE	230	1	BELLOTA	230	RNCHSECO	230	1	0.1293	1660
GOLDHILL	230	LAKE	230	1	BELLOTA	230	RNCHSECO	230	2	0.1293	1660
LOCKFORD	230	RIO OSO	230	1	BELLOTA	230	LOCKFORD	230	1	-0.1102	1753
STAGG	230	TESLA E	230	1	BELLOTA	230	LOCKFORD	230	1	-0.1147	1785

Base Case Title:

rs05hs11, 2005 Heavy Summer Cosumnes Generation Study Case
Cosumnes Generation = 1000 MW, FPLE Generation = 560 MW
From Western FPLE Study Case 05s-pgepeak_fplesrev1

Transfer Schedule Case Title:

rs05hs11, 2005 Heavy Summer Cosumnes Generation Study Case
Cosumnes Generation = 1000 MW, FPLE Generation = 560 MW
From Western FPLE Study Case 05s-pgepeak_fplesrev1
100 MW INCREMENTAL SCHEDULE INTO SMUD/ROSEVILLE LOAD AREA

No non-rated lines were identified.

1 overloaded lines were detected:

From Bus	To Bus	ID	Sens.	Percent Overload
BRGHTN M 230	BRIGHTN 115	1	-0.0060	13.8% Overload

4 forward schedule normal limits were detected:

From Bus	To Bus	ID	Sens.	Schedule MW Limit
CARMICAL 230	HURLEY S 230	1	-0.1020	1244
HURLEY 115	HURLEY S 230	1	-0.0410	1912
HURLEY W 230	TRCY PMP 230	2	-0.1620	1953
HURLEY W 230	TRCY PMP 230	1	-0.1580	1999

16 forward schedule outage limits were found:

Limiting Element			Outage				
From Bus	To Bus	ID	From Bus	To Bus	ID	Sens.	Schedule MW Limit
CARMICAL 230	HURLEY S 230	1	ELVERTAS 230	FOOTHILL 230	1	-0.1274	606
CARMICAL 230	HURLEY S 230	1	ELVERTAS 230	ORANGEVL 230	1	-0.1152	698
CARMICAL 230	HURLEY S 230	1	ORANGEVL 230	WHITEROK 230	1	-0.1053	1028
CARMICAL 230	HURLEY S 230	1	GOLDHILL 230	LAKE 230	1	-0.1409	1143
ATLANTC 230	RIO OSO 230	1	GOLDHILL 230	RIO OSO 230	1	-0.0237	885
HURLEY 115	HURLEY S 230	1	ELVERTAS 115	NORTHCTY 115	1	-0.0436	1020
HURLEY 115	HURLEY S 230	1	EAST CTY 115	HEDGE 115	1	-0.0496	1132
HURLEY 115	HURLEY S 230	1	HEDGE 115	HEDGE 230	6	-0.0467	1356
HURLEY 115	HURLEY S 230	1	CARMICAL 230	HURLEY S 230	1	-0.0460	1516
HURLEY 115	HURLEY S 230	1	HEDGE 115	HEDGE 230	4	-0.0446	1542
HEDGE 115	SOUTHCTY 115	1	HEDGE 115	SOUTHCTY 115	2	0.0318	1065
HEDGE 115	SOUTHCTY 115	1	EAST CTY 115	HEDGE 115	1	0.0301	1346
HEDGE 115	SOUTHCTY 115	1	HURLEY 115	HURLEY S 230	1	0.0255	1965
HEDGE 115	SOUTHCTY 115	2	HEDGE 115	SOUTHCTY 115	1	0.0318	1065
HEDGE 115	SOUTHCTY 115	2	EAST CTY 115	HEDGE 115	1	0.0301	1346
HEDGE 115	SOUTHCTY 115	2	HURLEY 115	HURLEY S 230	1	0.0255	1965

EAST CTY	115	HEDGE	115	1	HURLEY	115	HURLEY S	230	1	-0.0487	1124
EAST CTY	115	HEDGE	115	1	SOUTHCTY	115	STA. B	115	1	-0.0468	1523
ELVERTAW	230	OBANION	230	1	ELVERTAW	230	OBANION	230	2	-0.0604	1234
ELVERTAW	230	OBANION	230	2	ELVERTAW	230	OBANION	230	1	-0.0604	1234
HEDGE	115	HEDGE	230	4	HEDGE	115	HEDGE	230	6	-0.0366	1455
HEDGE	115	HEDGE	230	4	HURLEY	115	HURLEY S	230	1	-0.0319	1979
HEDGE	115	HEDGE	230	2	HEDGE	115	HEDGE	230	6	-0.0290	1492
HURLEY W	230	TRCY PMP	230	2	HURLEY W	230	TRCY PMP	230	1	-0.2048	1529
HURLEY W	230	TRCY PMP	230	2	COTWDWAP	230	ROSEVILL	230	1	-0.1724	1720
HURLEY W	230	TRCY PMP	230	2	GOLDHILL	230	LAKE	230	1	-0.1798	1724
HURLEY W	230	TRCY PMP	230	2	BELLOTA	230	RNCHSECO	230	1	-0.1817	1792
HURLEY W	230	TRCY PMP	230	2	BELLOTA	230	RNCHSECO	230	2	-0.1817	1792
HURLEY W	230	TRCY PMP	230	1	HURLEY W	230	TRCY PMP	230	2	-0.2028	1541
HURLEY W	230	TRCY PMP	230	1	COTWDWAP	230	ROSEVILL	230	1	-0.1681	1764
HURLEY W	230	TRCY PMP	230	1	GOLDHILL	230	LAKE	230	1	-0.1752	1767
HURLEY W	230	TRCY PMP	230	1	BELLOTA	230	RNCHSECO	230	1	-0.1773	1833
HURLEY W	230	TRCY PMP	230	1	BELLOTA	230	RNCHSECO	230	2	-0.1773	1833
ELVERTAS	230	FOOTHILL	230	1	CARMICAL	230	HURLEY S	230	1	0.0731	1746
GOLDHILL	230	RIO OSO	230	1	ATLANTC	230	RIO OSO	230	1	-0.0237	1753
ELKGROVE	230	RNCHSECO	230	1	HEDGE	230	RNCHSECO	230	1	-0.1807	1779
HEDGE	115	HEDGE	230	6	HURLEY	115	HURLEY S	230	1	-0.0439	1831
HEDGE	115	HEDGE	230	6	HEDGE	115	HEDGE	230	4	-0.0440	1899

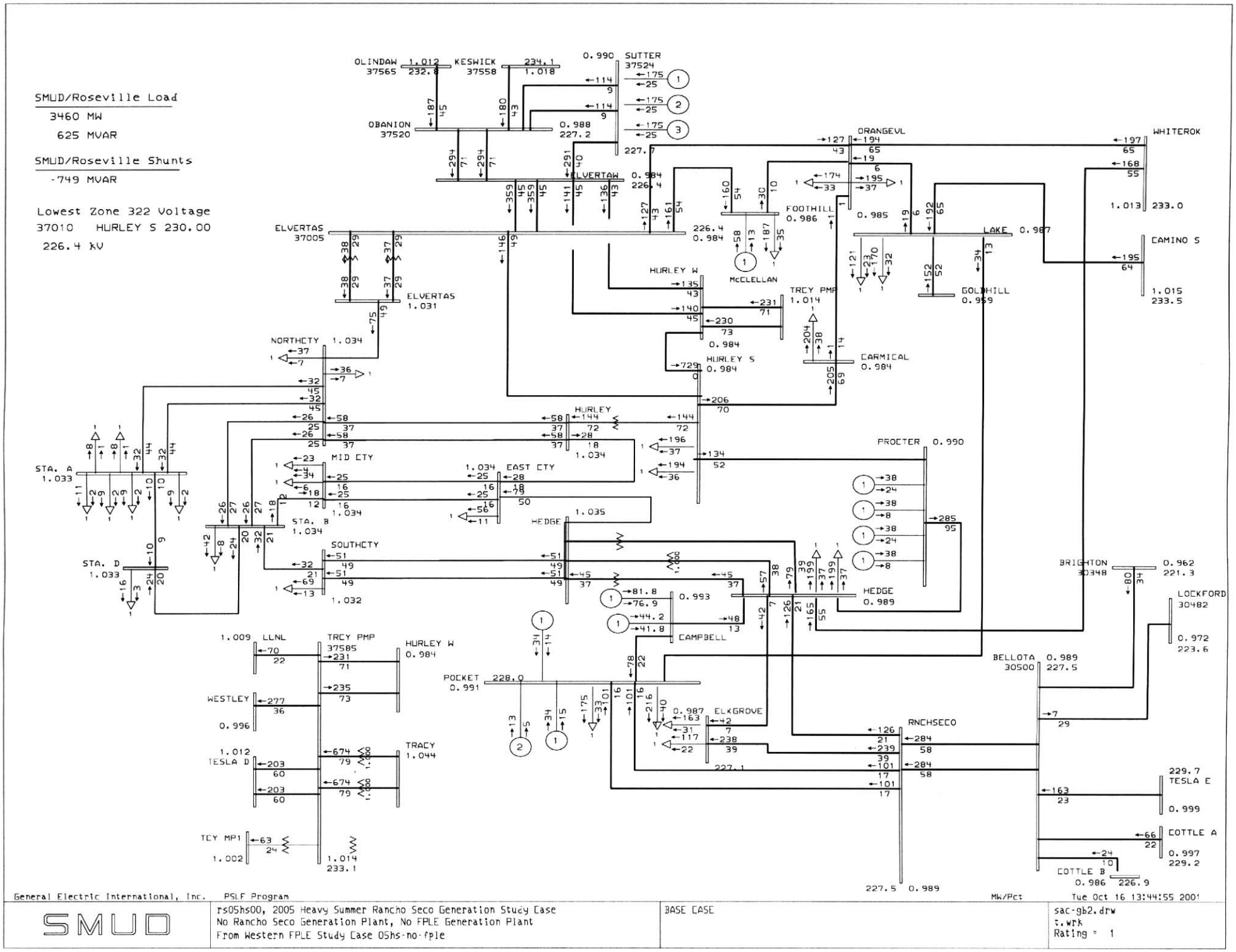
SMUD/Roseville Load
3460 MW
625 MVAR
SMUD/Roseville Shunts
-749 MVAR
Lowest Zone 322 Voltage
37010 HURLEY S 230.00
226.4 kV
OLINDAW 1.012 232.8
KESWICK 37558 234.1 1.018
SUTTER 37524 0.990
OBANION 37520 0.988 227.2
ELVERTAW 0.984 226.4
ELVERTAS 37005 226.4 0.984
ELVERTAS 1.031
NORTHCTY 1.034
STA. A 1.033
STA. B 1.034
STA. D 1.033
MID CTY
EAST CTY 1.034
HURLEY 1.034
HURLEY W
HURLEY S 0.984
McCLELLAN
TRCY PMP 1.014
FOOTHILL 0.986
ORANGEVL
WHITEROK 1.013 233.0
LAKE 0.987
CAMINO S 1.015 233.5
GOLDHILL 0.959
CARMICAL 0.984
PROCTER 0.990
HEDGE 1.035
SOUTHCTY 1.032
HEDGE 0.989
CAMPBELL 0.993
BRIGHTON 30348 0.962 221.3
LOCKFORD 30482 0.972 223.6
BELLOTA 30500 0.989 227.5
RNCHSECO 227.5 0.989
ELKGROVE 0.987 227.1
POCKET 0.991 228.0
LLNL 1.009
TRCY PMP 37585
HURLEY W 0.984
WESTLEY 0.996
TESLA D 1.012
TRACY 1.044
TCY MP1 1.002
1.014 233.1
229.7 TESLA E 0.999
COTTLE A 0.997 229.2
COTTLE B 0.986 226.9
General Electric International, Inc. PSLF Program
MW/Pct
Tue Oct 16 13:44:55 2001
SMUD
rs05hs00, 2005 Heavy Summer Rancho Seco Generation Study Case
No Rancho Seco Generation Plant, No FPLE Generation Plant
From Western FPLE Study Case 05hs-no-fple
BASE CASE
sac-gb2.drw
t.wrk
Rating = 1

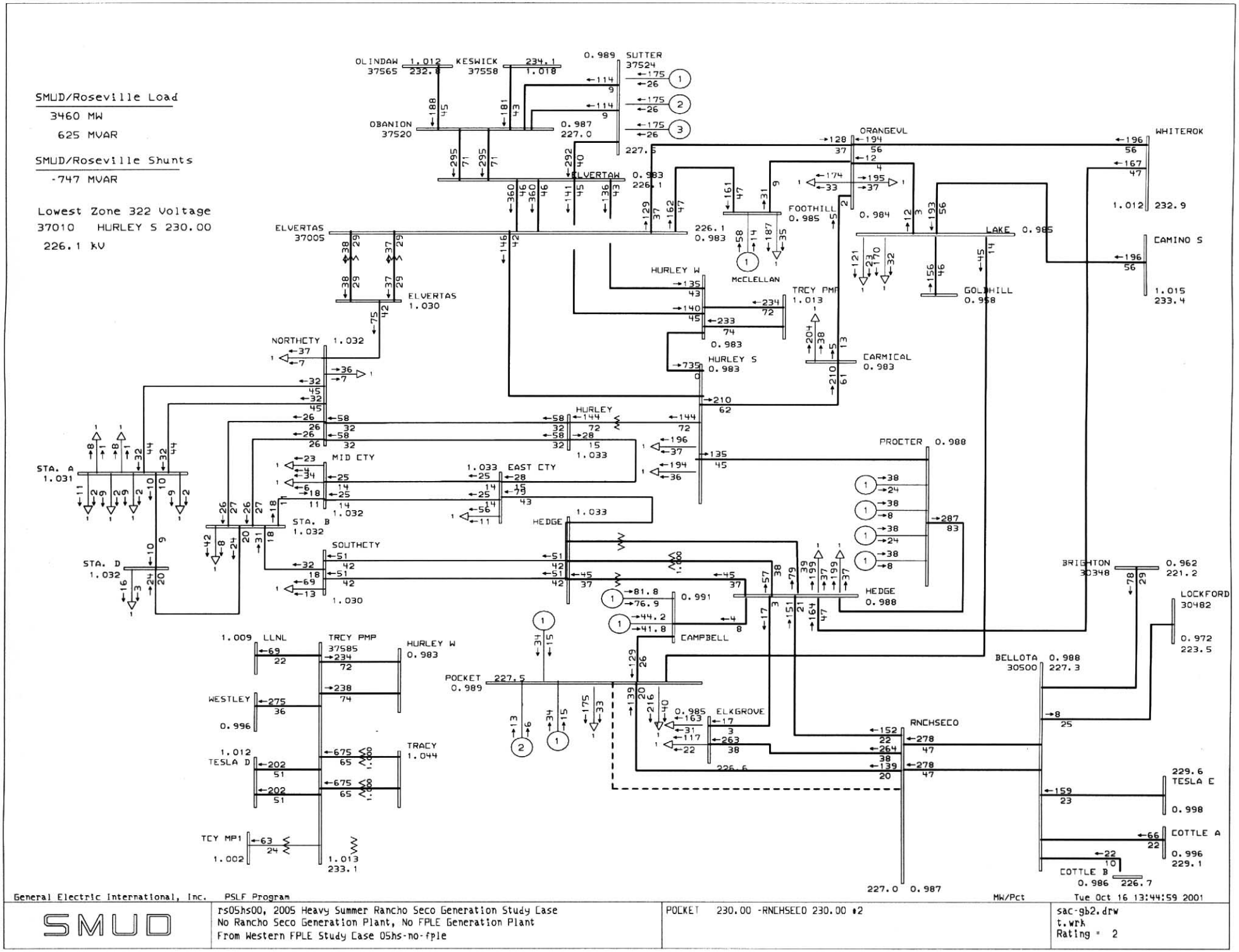
SMUD/Roseville Load
3460 MW
625 MVAR
SMUD/Roseville Shunts
-747 MVAR
Lowest Zone 322 Voltage
37010 HURLEY S 230.00
226.1 kV
OLINDAW 37565 1.012 232.8
KESWICK 37558 234.1 1.018
SUTTER 37524 0.989
OBANION 37520 0.987 227.0
ELVERTAW 226.1 0.983
ELVERTAS 37005
ELVERTAS 1.030
ORANGEVL
WHITEROK
FOOTHILL 0.985
LAKE 0.985
CAMINO S 1.015 233.4
McCLELLAN
HURLEY W
TRCY PMP 1.013
GOLDHILL 0.958
HURLEY S 0.983
CARMICAL 0.983
NORTHCTY 1.032
HURLEY 1.033
PROCTER 0.988
STA. A 1.031
MID CTY
EAST CTY 1.033
STA. B 1.032
HEDGE 1.033
SOUTHCTY 1.030
STA. D 1.032
HEDGE 0.988
BRIGHTON 30348 0.962 221.2
LOCKFORD 30482 0.972 223.5
CAMPBELL 0.991
LLNL 1.009
TRCY PMP 37585
HURLEY W 0.983
POCKET 227.5 0.989
WESTLEY 0.996
TRACY 1.044
TESLA D 1.012
TCY MP1 1.002
1.013 233.1
ELKGROVE 0.985
RNCHSECO 227.0 0.987
BELLOTA 30500 0.988 227.3
TESLA E 229.6 0.998
COTTLE A 0.996 229.1
COTTLE B 0.986 226.7
General Electric International, Inc. PSLF Program
MW/Pct
Tue Oct 16 13:44:59 2001
SMUD
rs05hs00, 2005 Heavy Summer Rancho Seco Generation Study Case
No Rancho Seco Generation Plant, No FPLE Generation Plant
From Western FPLE Study Case 05hs-no-fple
POCKET 230.00 -RNCHSECO 230.00 #2
sac-gb2.drw
t.wrk
Rating = 2

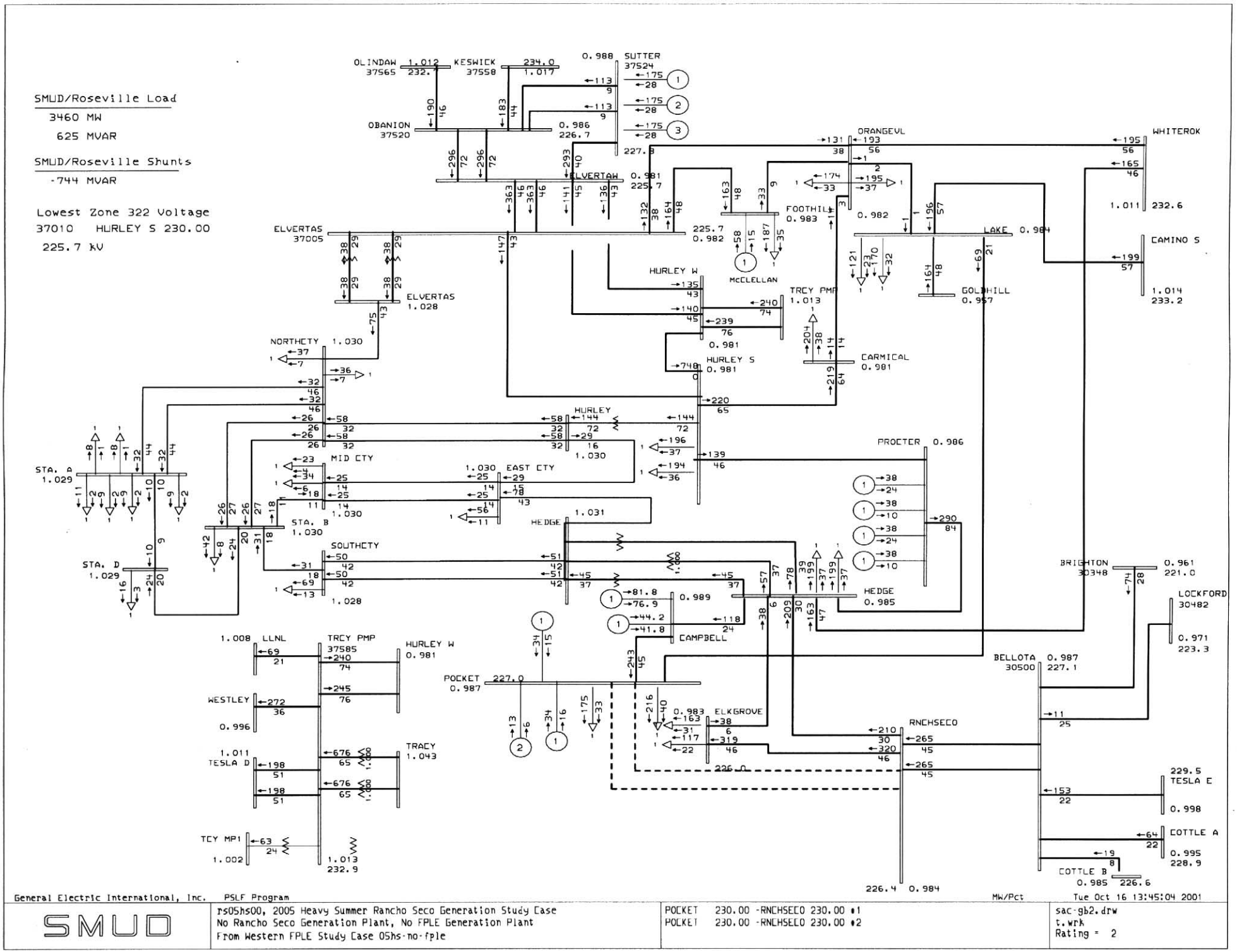
SMUD/Roseville Load
3460 MW
625 MVAR
SMUD/Roseville Shunts
-744 MVAR
Lowest Zone 322 Voltage
37010 HURLEY S 230.00
225.7 kV
OLINDAW 37565 1.012 232.7
KESWICK 37558 234.0 1.017
SUTTER 37524 0.988
OBANION 37520 0.986 226.7
ELVERTAW 0.981 225.7
ELVERTAS 37005 225.7 0.982
ELVERTAS 1.028
NORTHCTY 1.030
STA. A 1.029
STA. B 1.030
STA. D 1.029
MID CTY
EAST CTY 1.030
SOUTHCTY 1.028
HURLEY 1.030
HURLEY W
HURLEY S 0.981
McCLELLAN
TRCY PMP 1.013
CARMICAL 0.981
FOOTHILL 0.983
ORANGEVL 0.982
LAKE 0.984
GOLDHILL 0.967
WHITEROK 1.011 232.6
CAMINO S 1.014 233.2
PROCTER 0.986
HEDGE 1.031
HEDGE 0.985
BRIGHTON 30348 0.961 221.0
LOCKFORD 30482 0.971 223.3
CAMPBELL 0.989
POCKET 227.0 0.987
ELKGROVE 0.983
RNCHSECO 226.4 0.984
BELLOTA 30500 0.987 227.1
TESLA E 229.5 0.998
COTTLE A 0.995 228.9
COTTLE B 0.985 226.6
LLNL 1.008
TRCY PMP 37585
HURLEY W 0.981
WESTLEY 0.996
TESLA D 1.011
TRACY 1.043
TCY MP1 1.002
1.013 232.9
General Electric International, Inc. PSLF Program
MW/Pct
Tue Oct 16 13:45:04 2001
SMUD
rs05hs00, 2005 Heavy Summer Rancho Seco Generation Study Case
No Rancho Seco Generation Plant, No FPLE Generation Plant
From Western FPLE Study Case 05hs-no-fple
POCKET 230.00 -RNCHSECO 230.00 #1
POCKET 230.00 -RNCHSECO 230.00 #2
sac-gb2.drw
t.wrk
Rating = 2

SMUD/Roseville Load

3460 MW

625 MVAR

SMUD/Roseville Shunts

-743 MVAR

Lowest Zone 322 Voltage

37010 HURLEY S 230.00

225.2 kV

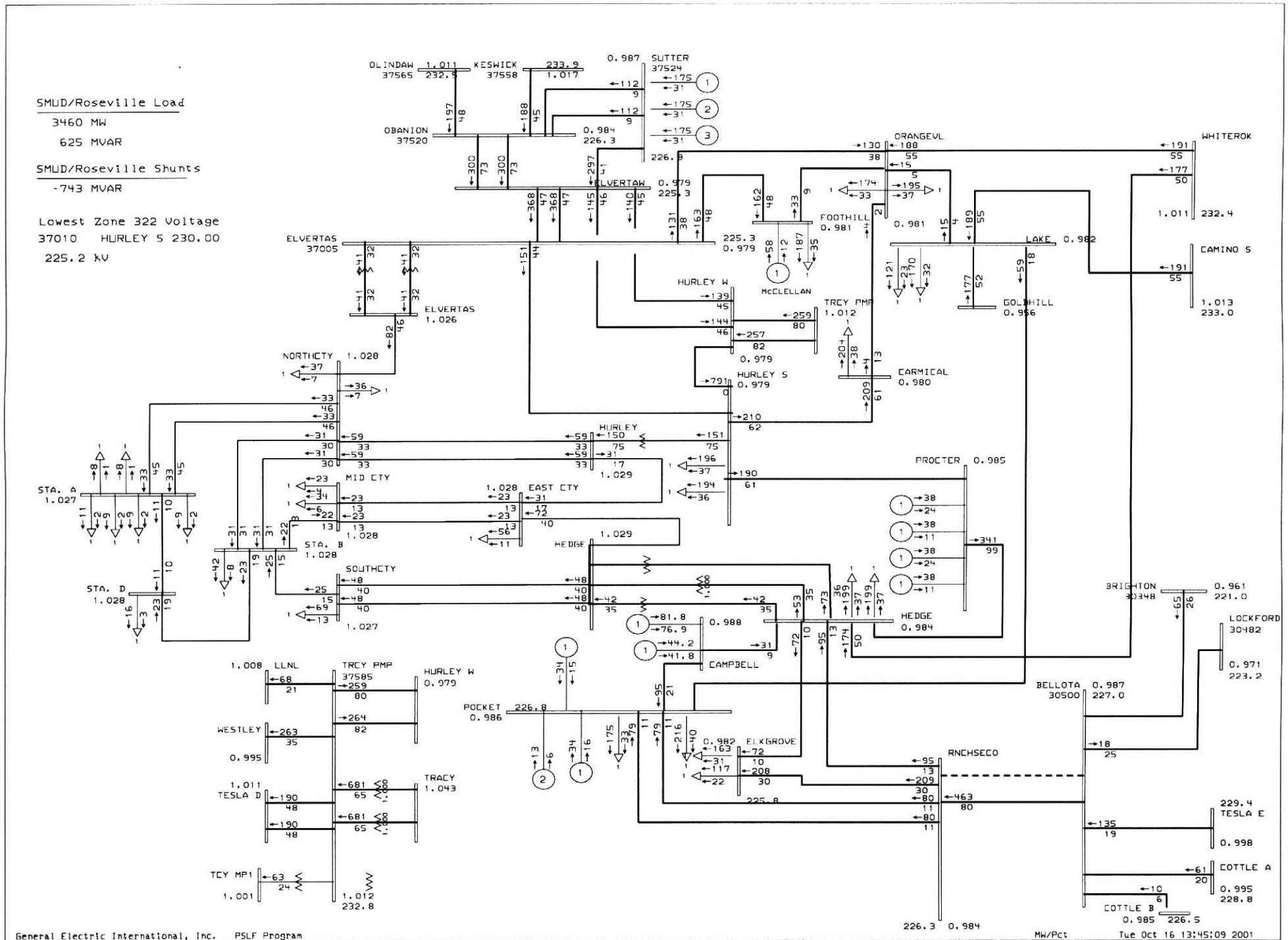

General Electric International, Inc. PSLF Program MW/Pct Tue Oct 16 13:45:09 2001

SMUD

rs05hs00, 2005 Heavy Summer Rancho Seco Generation Study Case
No Rancho Seco Generation Plant, No FPLE Generation Plant
From Western FPLE Study Case 05hs-no-fple

RNCHSECO 230.00 -BELLOTA 230.00 #1

sac-gb2.drw
t.wrk
Rating = 2

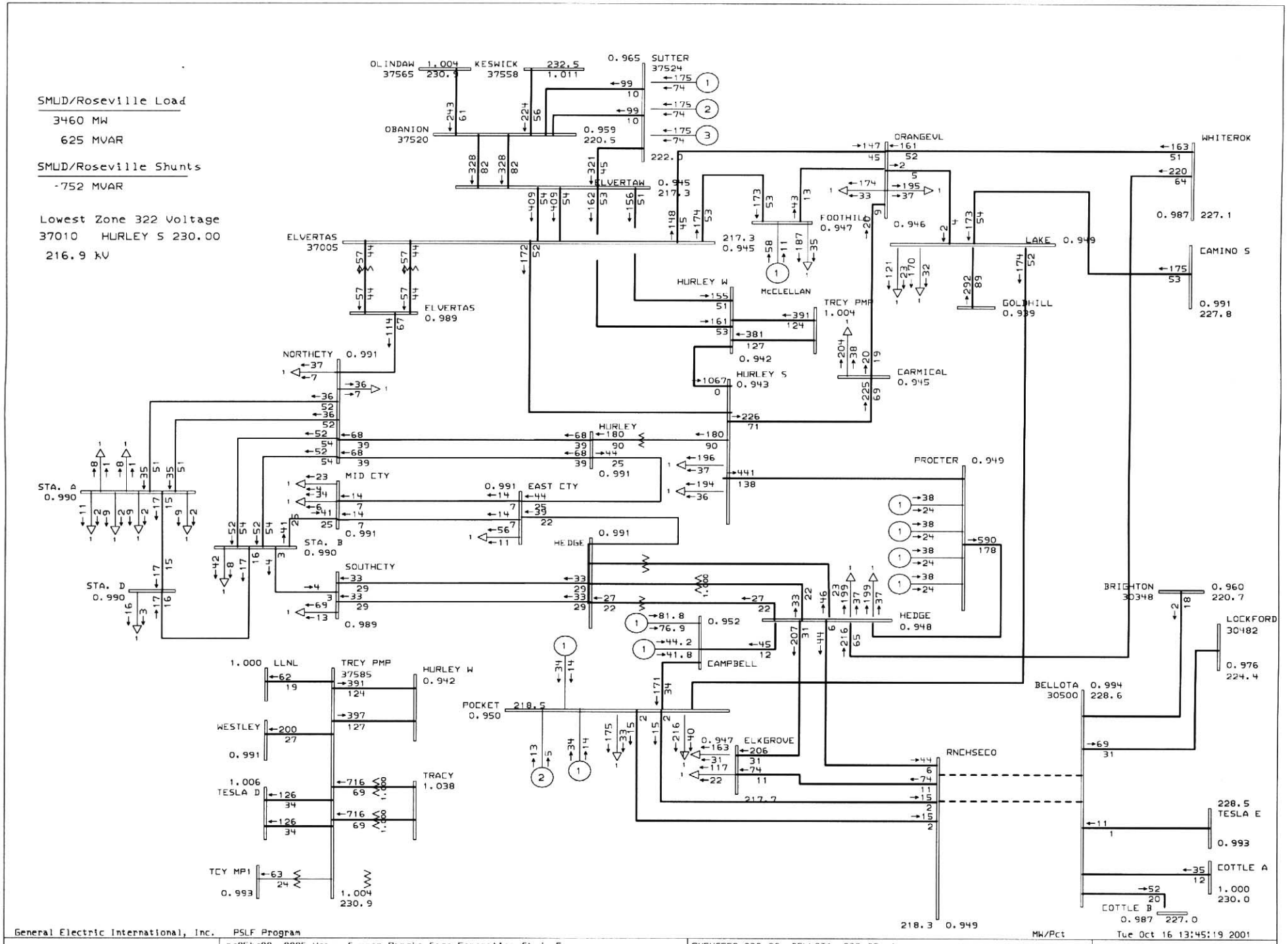
SMUD/Roseville Load
3460 MW
625 MVAR
SMUD/Roseville Shunts
-752 MVAR
Lowest Zone 322 Voltage
37010 HURLEY S 230.00
216.9 kV
OLINDAW 1.004 230.9 37565
KESWICK 232.5 1.011 37558
SUTTER 0.965 37524
OBANION 37520
ELVERTAW 0.945 217.3
ELVERTAS 37005
ELVERTAS 0.989
NORTHCTY 0.991
STA. A 0.990
STA. B 0.990
STA. D 0.990
MID CTY
EAST CTY 0.991
HURLEY 0.991
HEDGE 0.991
SOUTHCTY 0.989
HURLEY W
McCLELLAN
HURLEY S 0.943
TRCY PMP 1.004
CARMICAL 0.945
FOOTHILL 0.947
ORANGEVL 0.946
LAKE 0.949
GOLDHILL 0.939
WHITEROK 0.987 227.1
CAMINO S 0.991 227.8
PROCTER 0.949
HEDGE 0.948
BRIGHTON 30348 0.960 220.7
LOCKFORD 30482 0.976 224.4
BELLOTA 30500 0.994 228.6
TESLA E 228.5 0.993
COTTLE A 1.000 230.0
COTTLE B 0.987 227.0
CAMPBELL 0.952
POCKET 0.950 218.5
ELKGROVE 0.947
RNCHSECO 218.3 0.949
LLNL 1.000
TRCY PMP 37585
HURLEY W 0.942
WESTLEY 0.991
TESLA D 1.006
TRACY 1.038
TCY MP1 0.993
1.004 230.9
General Electric International, Inc. PSLF Program
MW/Pct
Tue Oct 16 13:45:19 2001
SMUD
rs05hs00, 2005 Heavy Summer Rancho Seco Generation Study Case
No Rancho Seco Generation Plant, No FPLE Generation Plant
From Western FPLE Study Case 05hs-no-fple
RNCHSECO 230.00 -BELLOTA 230.00 #1
RNCHSECO 230.00 -BELLOTA 230.00 #2
sac-gb2.drw
t.wrk
Rating = 2

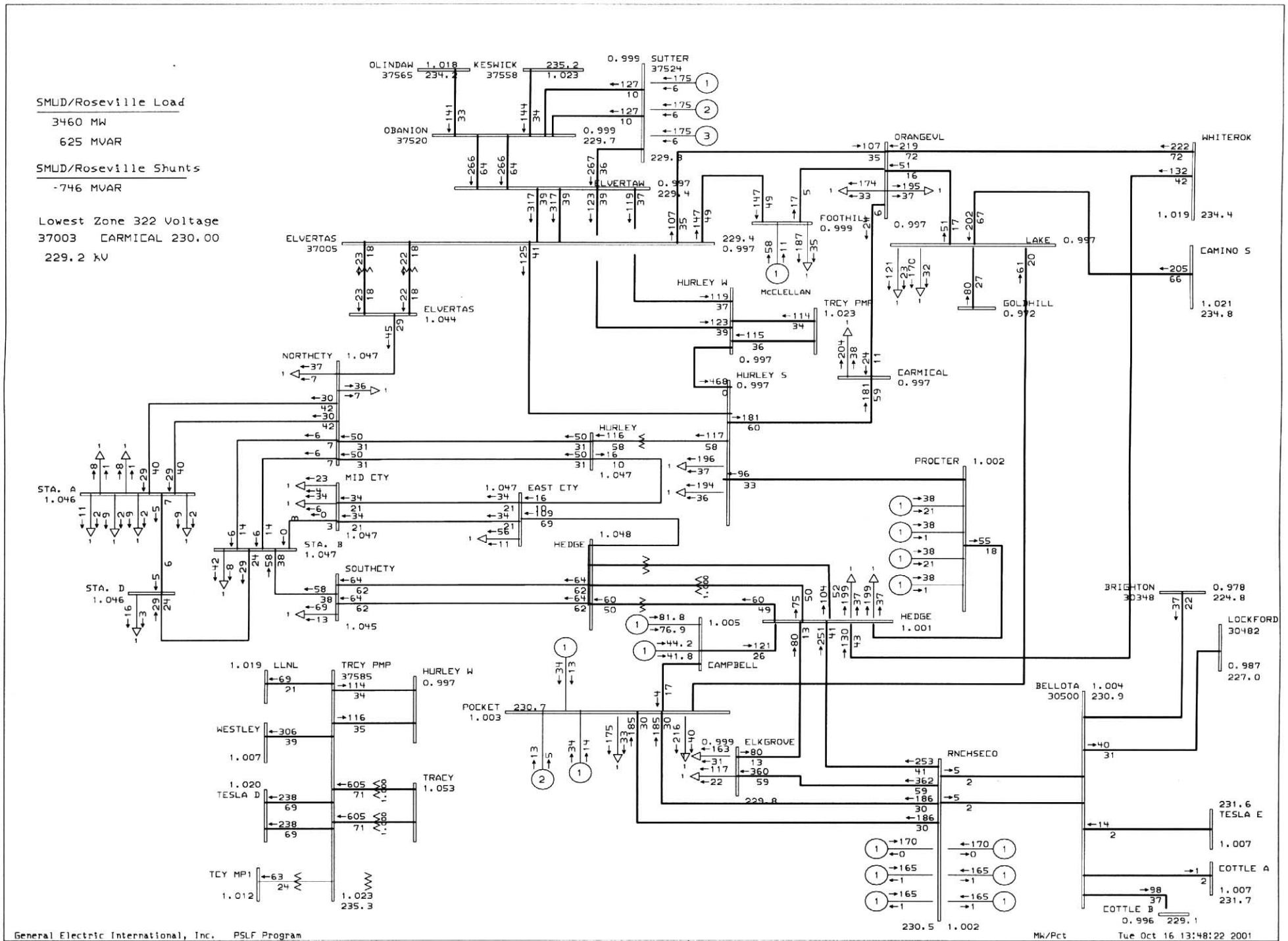
SMUD/Roseville Load
3460 MW
625 MVAR
SMUD/Roseville Shunts
-746 MVAR
Lowest Zone 322 Voltage
37003 CARMICAL 230.00
229.2 kV
OLINDAW 37565
KESWICK 37558
SUTTER 37524
OBANION 37520
ELVERTAW
ELVERTAS 37005
ORANGEVL
WHITEROK
FOOTHILL
LAKE
CAMINO S
HURLEY W
MCCLELLAN
TRCY PMP
GOLDHILL
CARMICAL
HURLEY S
NORTHCTY
HURLEY
PROCTER
STA. A
MID CTY
EAST CTY
STA. B
HEDGE
SOUTHCTY
STA. D
BRIGHTON 30348
LOCKFORD 30482
CAMPBELL
LLNL
TRCY PMP 37585
WESTLEY
TESLA D
TRACY
TCY MP1
POCKET
ELKGROVE
RNCHSECO
BELLOTA 30500
TESLA E
COTTLE A
COTTLE B
General Electric International, Inc. PSLF Program
MW/Pct
Tue Oct 16 13:48:22 2001
SMUD
rs05hs10, 2005 Heavy Summer Rancho Seco Generation Study Case
Rancho Seco Generation = 1000 MW, No FPLE Generation Plant
From Western FPLE Study Case 05hs-no-fple
BASE CASE
sac-gb2.drw
t.wrk
Rating = 1

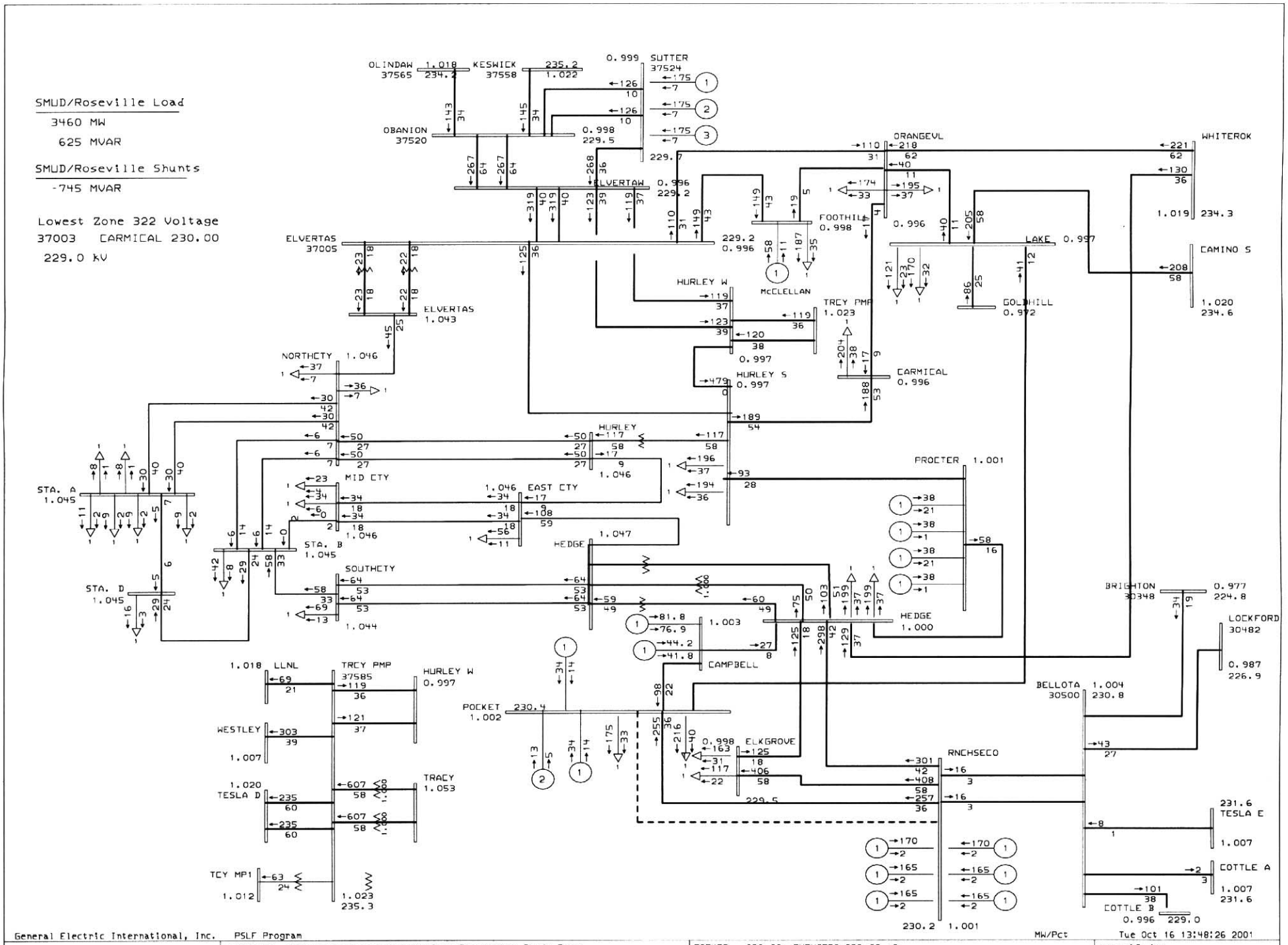
SMUD/Roseville Load
3460 MW
625 MVAR
SMUD/Roseville Shunts
-745 MVAR
Lowest Zone 322 Voltage
37003 CARMICAL 230.00
229.0 kV
OLINDAW 1.018 234.2
37565
KESWICK 235.2 1.022
37558
SUTTER 0.999
37524
OBANION 0.998 229.5
37520
ELVERTAW 0.996 229.2
ELVERTAS 229.2 0.996
37005
ELVERTAS 1.043
NORTHCTY 1.046
STA. A 1.045
STA. B 1.045
STA. D 1.045
MID CTY
EAST CTY 1.046
HURLEY 1.046
HURLEY W
HURLEY S 0.997
McCLELLAN
TRCY PMP 1.023
CARMICAL 0.996
FOOTHILL 0.998
ORANGEVL 229.7
WHITEROK 1.019 234.3
LAKE 0.997
CAMINO S 1.020 234.6
GOLDHILL 0.972
PROCTER 1.001
HEDGE 1.047
SOUTHCTY 1.044
HEDGE 1.000
BRIGHTON 30348 0.977 224.8
LOCKFORD 30482 0.987 226.9
CAMPBELL 1.003
POCKET 230.4 1.002
ELKGROVE 0.998
RNCHSECO 230.2 1.001
BELLOTA 30500 1.004 230.8
TESLA E 231.6 1.007
COTTLE A 1.007 231.6
COTTLE B 0.996 229.0
1.018 LLNL
TRCY PMP 37585
HURLEY W 0.997
WESTLEY 1.007
TESLA D 1.020
TRACY 1.053
TCY MP1 1.012
1.023 235.3
General Electric International, Inc. PSLF Program
MW/Pct
Tue Oct 16 13:48:26 2001
SMUD
rs05hs10, 2005 Heavy Summer Rancho Seco Generation Study Case
Rancho Seco Generation = 1000 MW, No FPLE Generation Plant
From Western FPLE Study Case 05hs-no-fple
POCKET 230.00 -RNCHSECO 230.00 #2
sac-gb2.drw
t.wrk
Rating = 2

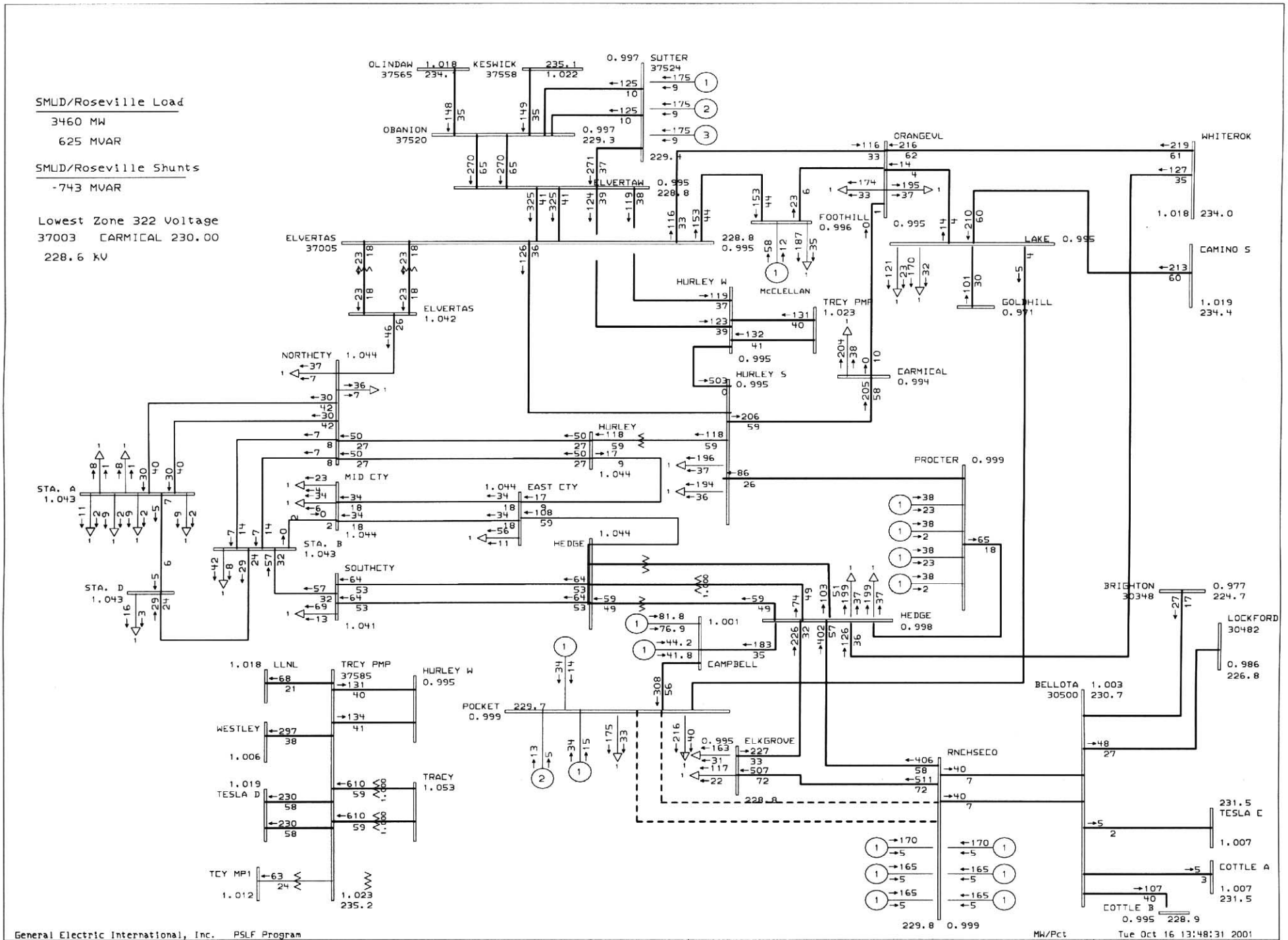
SMUD/Roseville Load
3460 MW
625 MVAR
SMUD/Roseville Shunts
-743 MVAR
Lowest Zone 322 Voltage
37003 CARMICAL 230.00
228.6 kV
OLINDAW 1.018 234.1
37565
KESWICK 235.1 1.022
37558
OBANION
37520
SUTTER 0.997
37524
ELVERTAW 0.995 228.8
ELVERTAS
37005
ELVERTAS 1.042
NORTHCTY 1.044
STA. A 1.043
STA. B 1.043
STA. D 1.043
MID CTY
EAST CTY 1.044
HURLEY
HURLEY W
HURLEY S 0.995
HEDGE 1.044
SOUTHCTY
1.041
McCLELLAN
FOOTHILL 0.996
ORANGEVL
WHITEROK
LAKE 0.995
CAMINO S
GOLDHILL 0.991
TRCY PMP 1.023
CARMICAL 0.994
PROCTER 0.999
HEDGE 0.998
BRIGHTON 30348 0.977 224.7
LOCKFORD 30482 0.986 226.8
CAMPBELL
POCKET 229.7 0.999
ELKGROVE 0.995
RNCHSECO
BELLOTA 1.003 230.7
30500
231.5 TESLA E 1.007
COTTLE A 1.007 231.5
COTTLE B 0.995 228.9
LLNL 1.018
TRCY PMP 37585
HURLEY W 0.995
WESTLEY 1.006
TRACY 1.053
TESLA D 1.019
TCY MP1 1.012
1.023 235.2
General Electric International, Inc. PSLF Program
MW/Pct
Tue Oct 16 13:48:31 2001
SMUD
rs05hs10, 2005 Heavy Summer Rancho Seco Generation Study Case
Rancho Seco Generation = 1000 MW, No FPLE Generation Plant
From Western FPLE Study Case 05hs-no-fple
POCKET 230.00 -RNCHSECO 230.00 #1
POCKET 230.00 -RNCHSECO 230.00 #2
sac-gb2.drw
t.wrk
Rating = 2

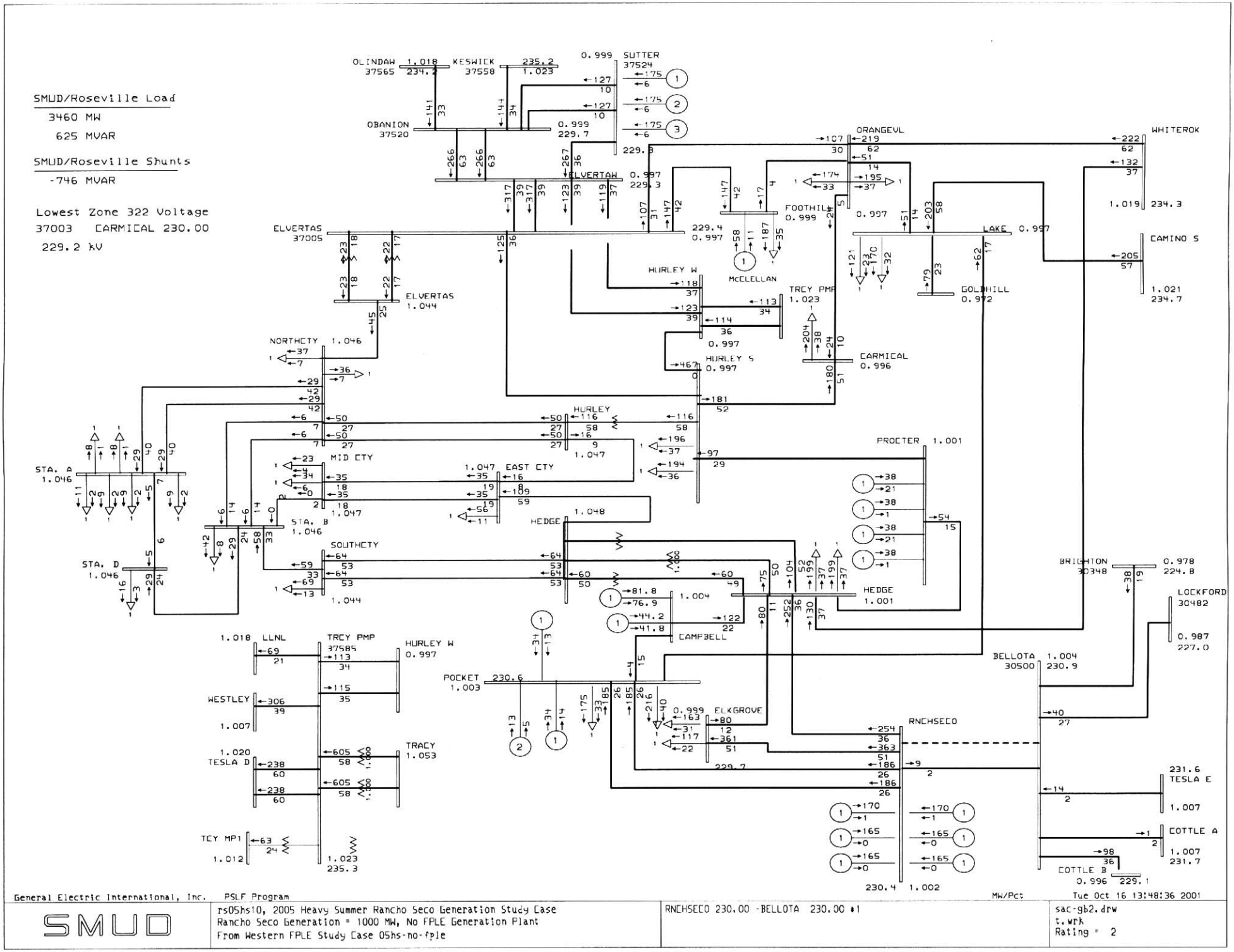
SMUD/Roseville Load
3460 MW
625 MVAR
SMUD/Roseville Shunts
-746 MVAR
Lowest Zone 322 Voltage
37003 CARMICAL 230.00
229.2 kV
OLINDAW 37565
KESWICK 37558
SUTTER 37524
OBANION 37520
ELVERTAW
ORANGEVL
WHITEROK
FOOTHILL
LAKE
CAMINO S
ELVERTAS 37005
ELVERTAS
HURLEY W
McCLELLAN
TRCY PMP
GOLDHILL
CARMICAL
HURLEY S
NORTHCTY
HURLEY
PROCTER
STA. A
MID CTY
EAST CTY
STA. B
HEDGE
STA. D
SOUTHCTY
BRIGHTON 30348
LOCKFORD 30482
LLNL
TRCY PMP 37585
HURLEY W
CAMPBELL
BELLOTA 30500
POCKET
WESTLEY
ELKGROVE
RNCHSECO
TESLA D
TRACY
TESLA E
TCY MP1
COTTLE A
COTTLE B
General Electric International, Inc. PSLF Program
MW/Pct
Tue Oct 16 13:48:36 2001
SMUD
rs05hs10, 2005 Heavy Summer Rancho Seco Generation Study Case
Rancho Seco Generation = 1000 MW, No FPLE Generation Plant
From Western FPLE Study Case 05hs-no-fple
RNCHSECO 230.00 -BELLOTA 230.00 ♦1
sac-gb2.drw
t.wrk
Rating = 2

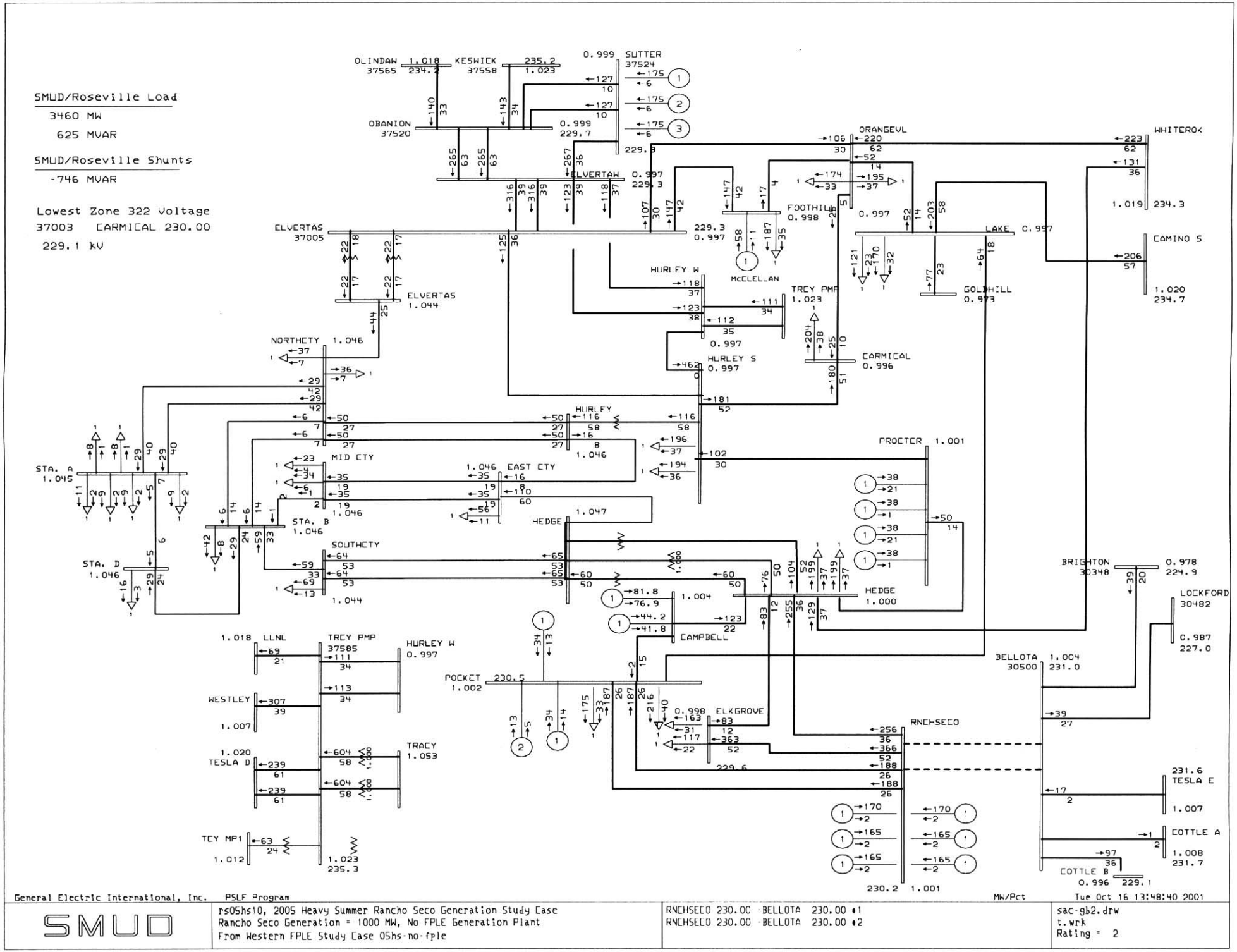
SMUD/Roseville Load
3460 MW
625 MVAR
SMUD/Roseville Shunts
-746 MVAR
Lowest Zone 322 Voltage
37003 CARMICAL 230.00
229.1 kV
OLINDAW 1.018 234.2
37565
KESWICK 235.2 1.023
37558
0.999 SUTTER
37524
OBANION
37520
0.999 229.7
ELVERTAW 0.997 229.3
ORANGEVL
WHITEROK
1.019 234.3
FOOTHILL 0.998
LAKE 0.997
CAMINO S
1.020 234.7
ELVERTAS
37005
ELVERTAS 1.044
HURLEY W
MCCLELLAN
TRCY PMP 1.023
GOLDHILL 0.993
CARMICAL 0.996
HURLEY S 0.997
NORTHCTY 1.046
HURLEY 1.046
PROCTER 1.001
STA. A 1.045
MID CTY
EAST CTY
STA. B 1.046
HEDGE 1.047
STA. D 1.046
SOUTHCTY 1.044
HEDGE 1.000
BRIGHTON 30348
0.978 224.9
LOCKFORD 30482
0.987 227.0
CAMPBELL 1.004
1.018 LLNL
TRCY PMP 37585
HURLEY W 0.997
POCKET 230.5 1.002
BELLOTA 30500 1.004 231.0
WESTLEY 1.007
0.998 ELKGROVE
RNCHSECO
1.020 TESLA D
TRACY 1.053
231.6 TESLA E
1.007
COTTLE A
1.008 231.7
TCY MP1 1.012
1.023 235.3
COTTLE B 0.996 229.1
230.2 1.001
General Electric International, Inc. PSLF Program
MW/Pct
Tue Oct 16 13:48:40 2001
SMUD
rs05hs10, 2005 Heavy Summer Rancho Seco Generation Study Case
Rancho Seco Generation = 1000 MW, No FPLE Generation Plant
From Western FPLE Study Case 05hs-no-fple
RNCHSECO 230.00 -BELLOTA 230.00 #1
RNCHSECO 230.00 -BELLOTA 230.00 #2
sac-gb2.drw
t.wrk
Rating = 2

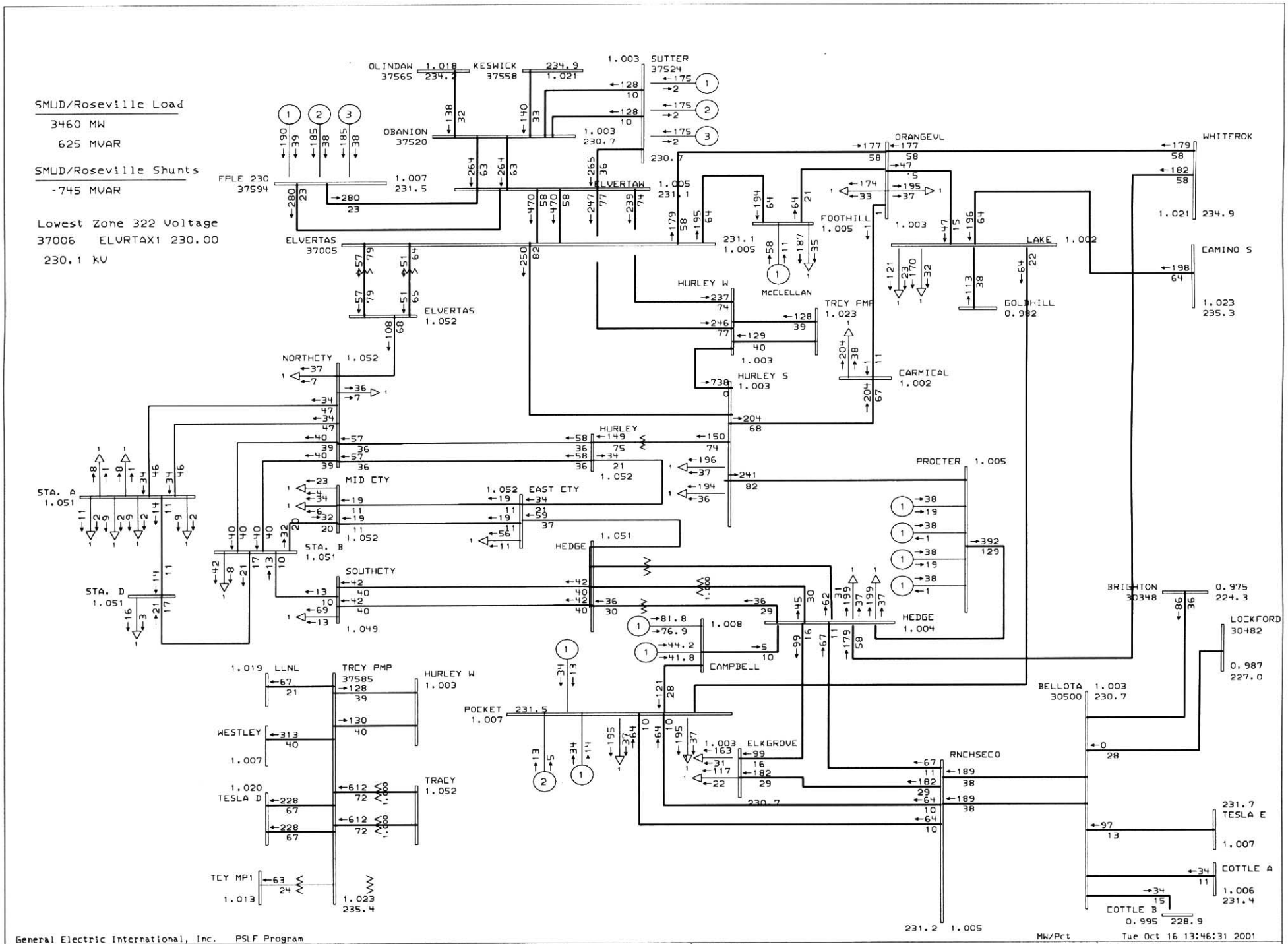
SMUD/Roseville Load
3460 MW
625 MVAR
SMUD/Roseville Shunts
-745 MVAR
Lowest Zone 322 Voltage
37006 ELVRTAX1 230.00
230.1 kV
OLINDAW 1.018 234.2
KESWICK 37558 234.9 1.021
SUTTER 37524 1.003
OBANION 37520 1.003 230.7
FPLE 230 37594 1.007 231.5
ELVERTAW 1.005 231.1
ELVERTAS 37005 231.1 1.005
ELVERTAS 1.052
NORTHCTY 1.052
STA. A 1.051
STA. B 1.051
STA. D 1.051
MID CTY
EAST CTY 1.052
SOUTHCTY 1.049
HEDGE 1.051
HURLEY 1.052
HURLEY W
HURLEY S 1.003
McCLELLAN
FOOTHILL 1.005
TRCY PMP 1.023
CARMICAL 1.002
ORANGEVL
WHITEROK 1.021 234.9
CAMINO S 1.023 235.3
LAKE 1.002
GOLDHILL 0.982
PROCTER 1.005
HEDGE 1.004
BRIGHTON 30348 0.975 224.3
LOCKFORD 30482 0.987 227.0
BELLOTA 30500 1.003 230.7
RNCHSECO 231.2 1.005
TESLA E 231.7 1.007
COTTLE A 1.006 231.4
COTTLE B 0.995 228.9
CAMPBELL 1.008
POCKET 1.007 231.5
ELKGROVE 1.003 230.7
LLNL 1.019
TRCY PMP 37585
HURLEY W 1.003
WESTLEY 1.007
TRACY 1.052
TESLA D 1.020
TCY MP1 1.013
1.023 235.4
General Electric International, Inc. PSLF Program
MW/Pct
Tue Oct 16 13:46:31 2001
SMUD
rs05hs01, 2005 Heavy Summer Rancho Seco Generation Study Case
No Rancho Seco Generation Plant, FPLE Generation = 560 MW
From Western FPLE Study Case 05s-pgepeak_fplesrev1
BASE CASE
sac-gb2.drw
t.wrk
Rating = 1

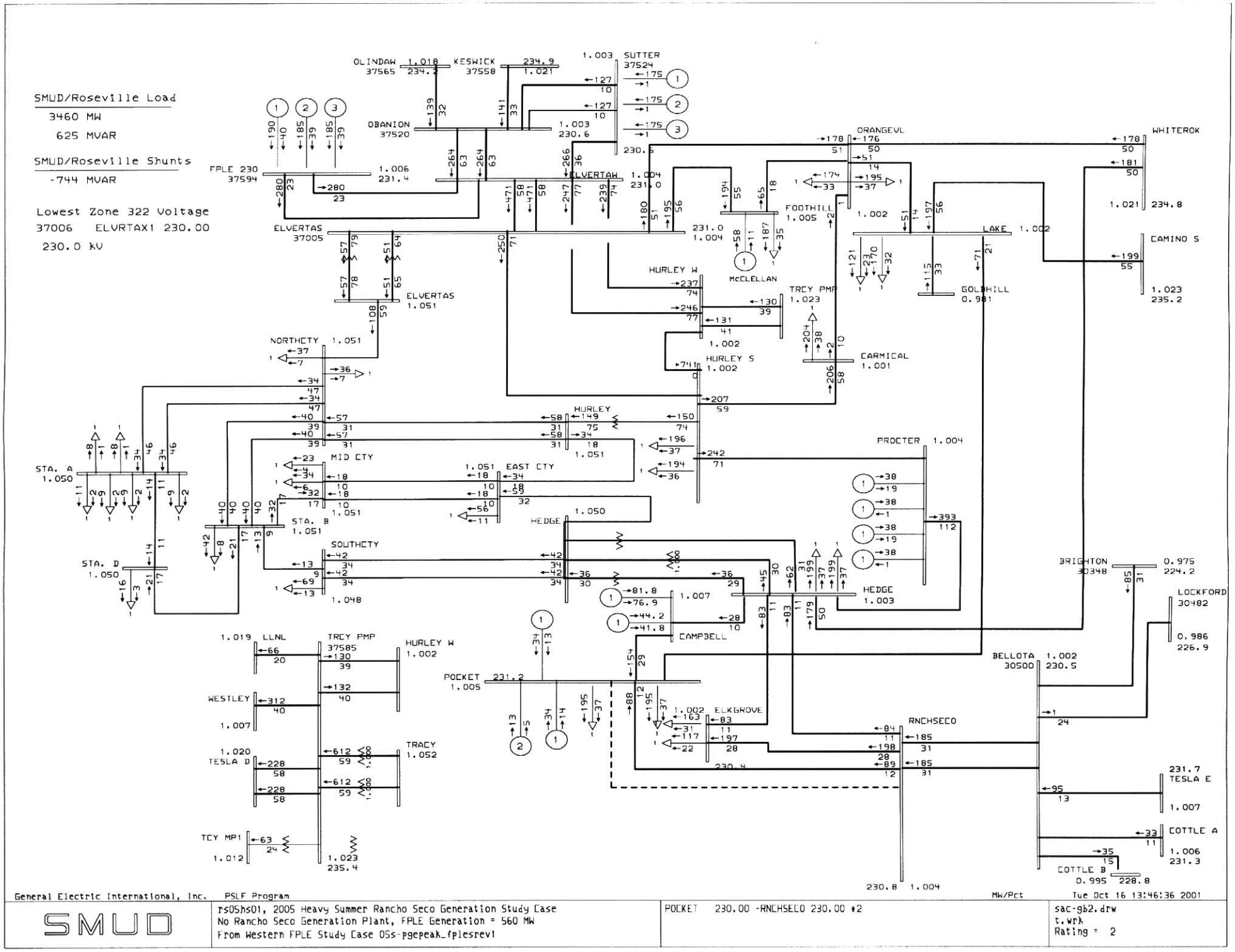
SMUD/Roseville Load
3460 MW
625 MVAR
SMUD/Roseville Shunts
-744 MVAR
Lowest Zone 322 Voltage
37006 ELVRTAX1 230.00
230.0 kV
OLINDAW 1.018 234.2 37565
KESWICK 234.9 1.021 37558
1.003 SUTTER 37524
OBANION 37520
1.003 230.6
FPLE 230 37594
1.006 231.4
ELVERTAW 1.004 231.0
ORANGEVL 230.5
WHITEROK
FOOTHILL 1.005
1.002
LAKE 1.002
CAMINO S
1.021 234.8
1.023 235.2
ELVERTAS 37005
231.0 1.004
McCLELLAN
HURLEY W
TRCY PMP 1.023
GOLDHILL 0.981
ELVERTAS 1.051
NORTHCTY 1.051
HURLEY S 1.002
CARMICAL 1.001
HURLEY 149 75 1.051
PROCTER 1.004
STA. A 1.050
MID CTY
1.051 EAST CTY
STA. B 1.051
HEDGE 1.050
SOUTHCTY
STA. D 1.050
1.048
1.007
HEDGE 1.003
BRIGHTON 30348
0.975 224.2
LOCKFORD 30482
0.986 226.9
CAMPBELL
1.019 LLNL
TRCY PMP 37585
HURLEY W 1.002
BELLOTA 30500 1.002 230.5
POCKET 231.2 1.005
WESTLEY 1.007
1.002 ELKGROVE
RNCHSECO
1.020 TESLA D
TRACY 1.052
231.7 TESLA E
1.007
COTTLE A
1.006 231.3
TCY MP1 1.012
1.023 235.4
COTTLE B 0.995 228.8
230.8 1.004
General Electric International, Inc. PSLF Program
MW/Pct
Tue Oct 16 13:46:36 2001
SMUD
rs05hs01, 2005 Heavy Summer Rancho Seco Generation Study Case
No Rancho Seco Generation Plant, FPLE Generation = 560 MW
From Western FPLE Study Case 05s-pgepeak_fplesrev1
POCKET 230.00 -RNCHSECO 230.00 #2
sac-gb2.drw
t.wrk
Rating = 2

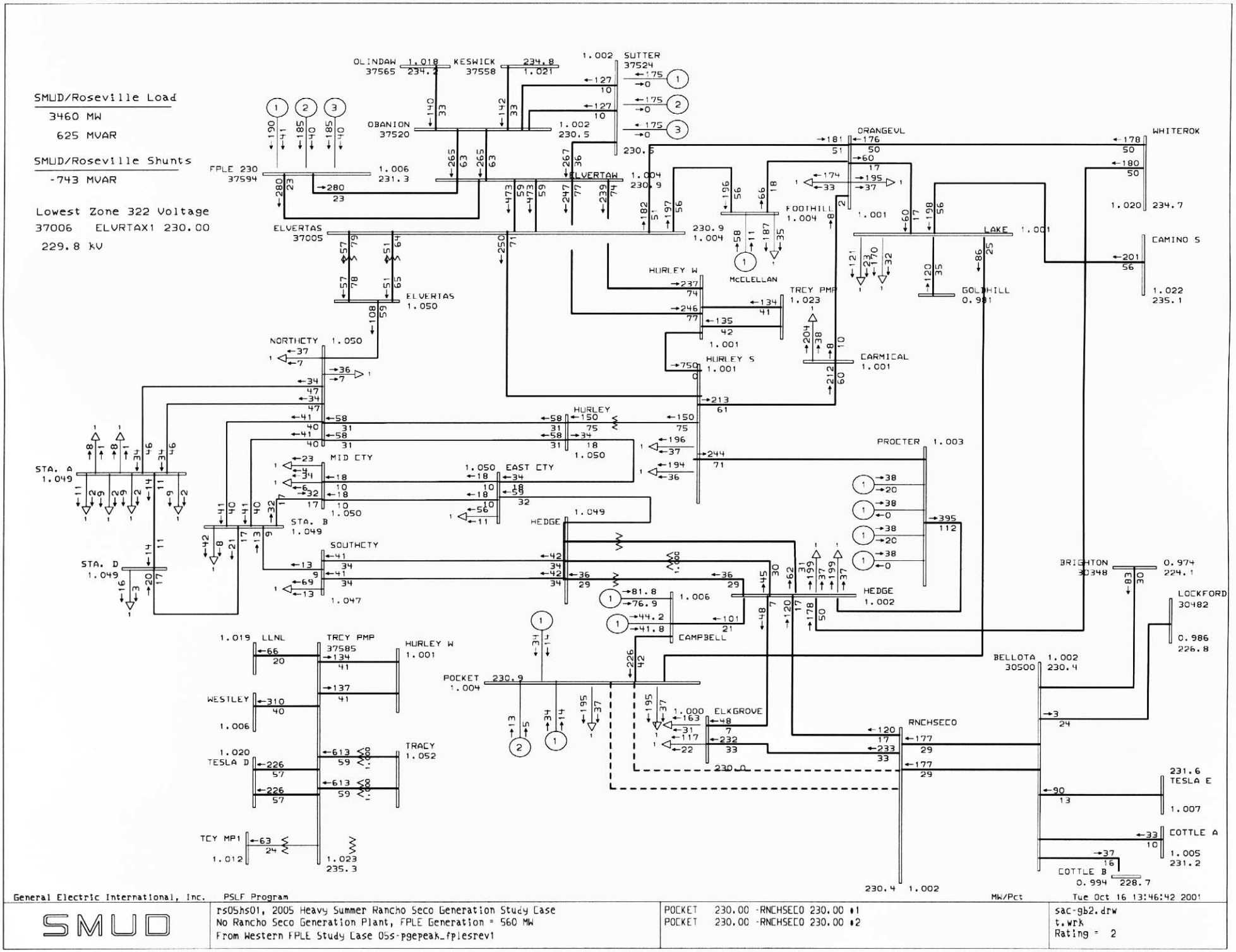
SMUD/Roseville Load
3460 MW
625 MVAR
SMUD/Roseville Shunts
-743 MVAR
Lowest Zone 322 Voltage
37006 ELVRTAX1 230.00
229.8 kV
OLINDAW 37565
KESWICK 37558
SUTTER 37524
OBANION 37520
FPLE 230 37594
ELVERTAW
ELVERTAS 37005
ELVERTAS 1.050
NORTHCTY
HURLEY W
HURLEY S
HURLEY
McCLELLAN
TRCY PMP 1.023
CARMICAL 1.001
FOOTHILL 1.004
ORANGEVL
WHITEROK
LAKE
CAMINO S
GOLDHILL 0.981
PROCTER 1.003
STA. A 1.049
STA. B 1.049
STA. D 1.049
MID CTY
EAST CTY
SOUTHCTY
HEDGE
BRIGHTON 30348
LOCKFORD 30482
BELLOTA 30500
CAMPBELL
POCKET 1.004
ELKGROVE
RNCHSECO
LLNL
TRCY PMP 37585
WESTLEY
TESLA D
TRACY 1.052
TCY MP1
TESLA E
COTTLE A
COTTLE B
General Electric International, Inc.
PSLF Program
MW/Pct
Tue Oct 16 13:46:42 2001
SMUD
rs05hs01, 2005 Heavy Summer Rancho Seco Generation Study Case
No Rancho Seco Generation Plant, FPLE Generation = 560 MW
From Western FPLE Study Case 05s-pgepeak_fplesrev1
POCKET 230.00 -RNCHSECO 230.00 #1
POCKET 230.00 -RNCHSECO 230.00 #2
sac-gb2.drw
t.wrk
Rating = 2

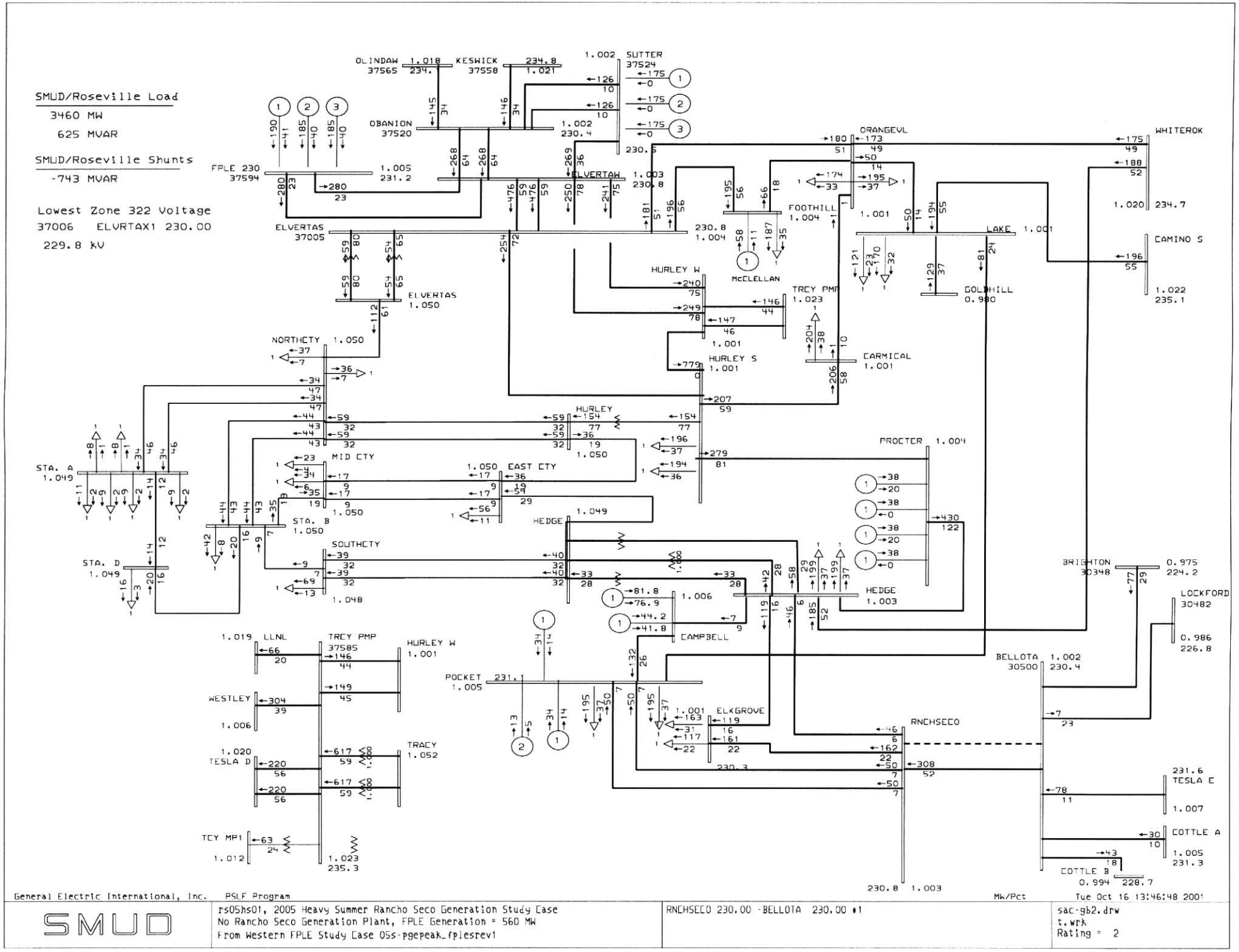
SMUD/Roseville Load
3460 MW
625 MVAR
SMUD/Roseville Shunts
-743 MVAR
Lowest Zone 322 Voltage
37006 ELVRTAX1 230.00
229.8 kV
OLINDAW 37565
KESWICK 37558
SUTTER 37524
OBANION 37520
FPLE 230 37594
ELVERTAW
ELVERTAS 37005
ELVERTAS 1.050
ORANGEVL
WHITEROK
FOOTHILL 1.004
LAKE
CAMINO S
McCLELLAN
HURLEY W
TRCY PMP 1.023
GOLDHILL 0.980
HURLEY S 1.001
CARMICAL 1.001
NORTHCTY 1.050
HURLEY
PROCTER 1.004
STA. A 1.049
MID CTY
EAST CTY
STA. B 1.050
HEDGE 1.049
STA. D 1.049
SOUTHCTY
HEDGE 1.003
BRIGHTON 30348
LOCKFORD 30482
CAMPBELL
LLNL
TRCY PMP 37585
HURLEY W 1.001
POCKET 1.005
BELLOTA 30500
WESTLEY
ELKGROVE
RNCHSECO
TRACY 1.052
TESLA D
TESLA E
TCY MP1
COTTLE A
COTTLE B
General Electric International, Inc.
PSLF Program
Mw/Pct
Tue Oct 16 13:46:48 2001
SMUD
rs05hs01, 2005 Heavy Summer Rancho Seco Generation Study Case
No Rancho Seco Generation Plant, FPLE Generation = 560 MW
From Western FPLE Study Case 05s-pgepeak_fplesrev1
RNCHSECO 230.00 -BELLOTA 230.00 #1
sac-gb2.drw
t.wrk
Rating = 2

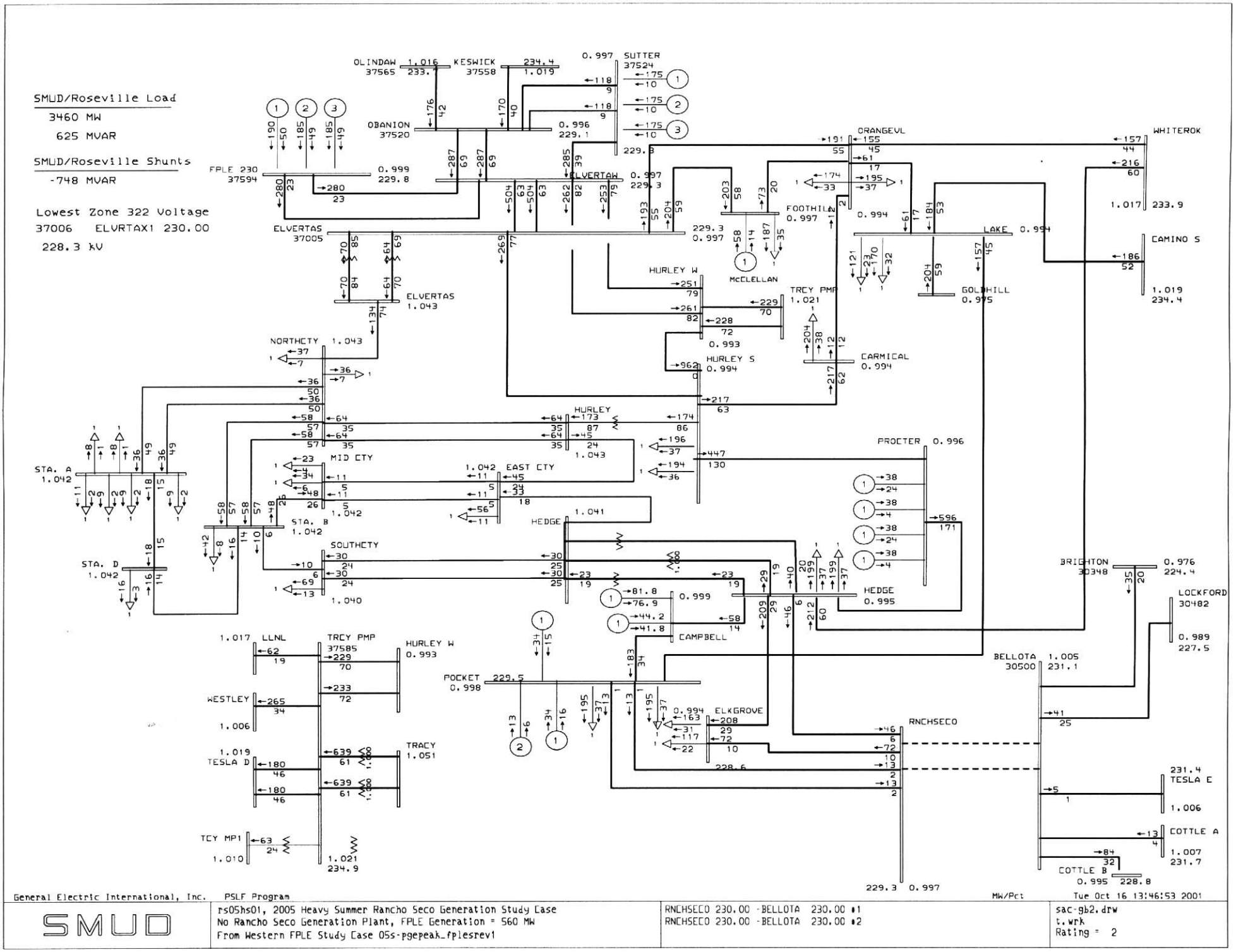
SMUD/Roseville Load
3460 MW
625 MVAR
SMUD/Roseville Shunts
-748 MVAR
Lowest Zone 322 Voltage
37006 ELVRTAX1 230.00
228.3 kV
OLINDAW 1.016 233.7
KESWICK 37558 234.4 1.019
SUTTER 37524 0.997
OBANION 37520 0.996 229.1
FPLE 230 37594 0.999 229.8
ELVERTAW 0.997 229.3
ELVERTAS 37005 229.3 0.997
ELVERTAS 1.043
NORTHCTY 1.043
HURLEY W
HURLEY S 0.994
HURLEY
McCLELLAN
TRCY PMP 1.021
FOOTHILL 0.997
ORANGEVL
WHITEROK
LAKE 0.994
GOLDHILL 0.975
CAMINO S
CARMICAL 0.994
PROCTER 0.996
STA. A 1.042
STA. B 1.042
STA. D 1.042
MID CTY
EAST CTY 1.042
SOUTHCTY 1.040
HEDGE 1.041
HEDGE 0.995
CAMPBELL 0.999
BRIGHTON 30348 0.976 224.4
LOCKFORD 30482 0.989 227.5
BELLOTA 30500 1.005 231.1
RNCHSECO 229.3 0.997
ELKGROVE 0.994 228.6
POCKET 0.998 229.5
LLNL 1.017
TRCY PMP 37585
HURLEY W 0.993
WESTLEY 1.006
TRACY 1.051
TESLA D 1.019
TCY MP1 1.010 1.021 234.9
TESLA E 231.4 1.006
COTTLE A 1.007 231.7
COTTLE B 0.995 228.8
General Electric International, Inc. PSLF Program
MW/Pct
Tue Oct 16 13:46:53 2001
SMUD
rs05hs01, 2005 Heavy Summer Rancho Seco Generation Study Case
No Rancho Seco Generation Plant, FPLE Generation = 560 MW
From Western FPLE Study Case 05s-pgepeak_fplesrev1
RNCHSECO 230.00 -BELLOTA 230.00 #1
RNCHSECO 230.00 -BELLOTA 230.00 #2
sac-gb2.drw
t.wrk
Rating = 2

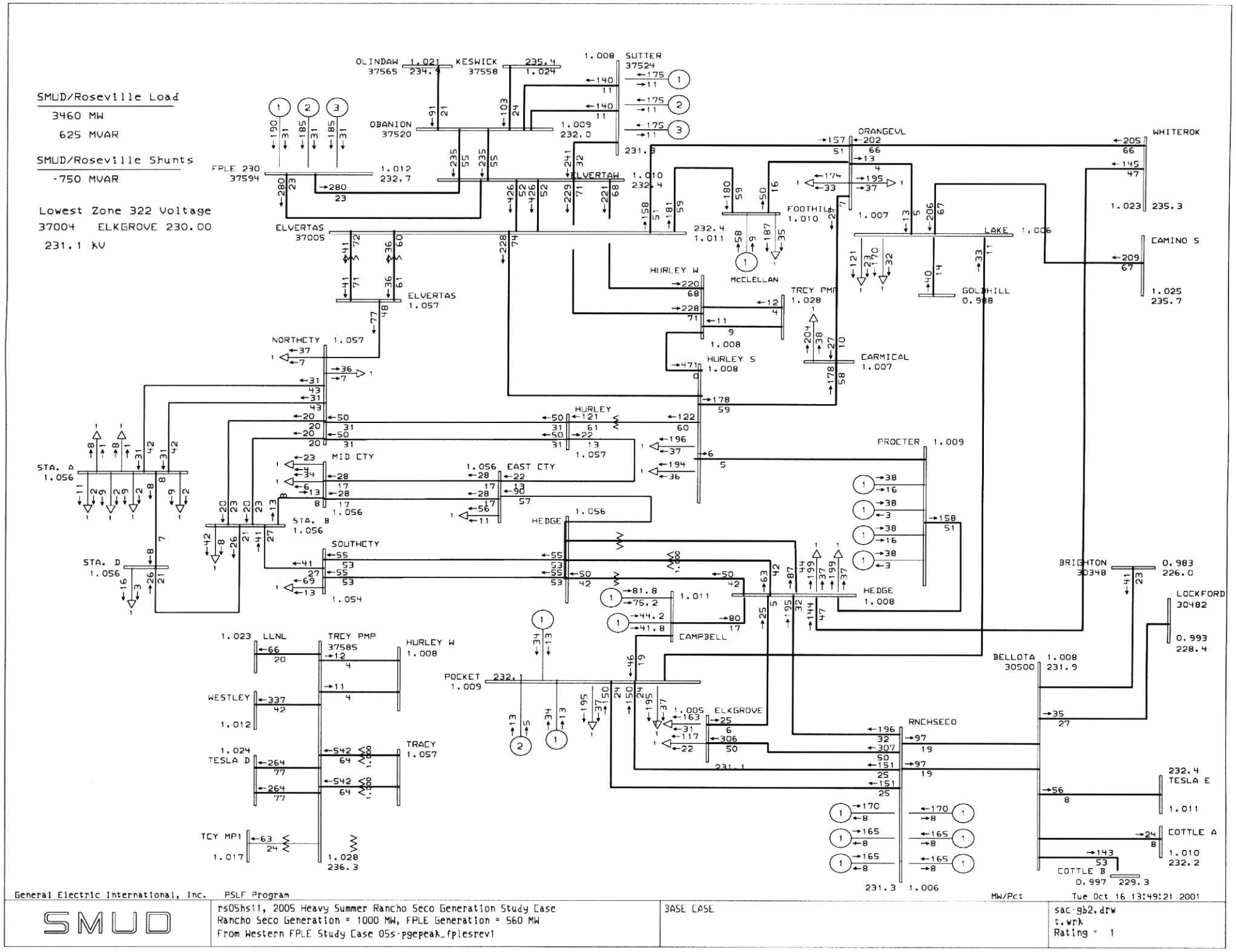
SMUD/Roseville Load
3460 MW
625 MVAR
SMUD/Roseville Shunts
-750 MVAR
Lowest Zone 322 Voltage
37004 ELKGROVE 230.00
231.1 kV
OLINDAW 37565
KESWICK 37558
SUTTER 37524
OBANION 37520
FPLE 230 37594
ELVERTAW
ELVERTAS 37005
ELVERTAS 1.057
ORANGEVL
WHITEROK
FOOTHILL 1.010
McCLELLAN
LAKE
CAMINO S
HURLEY W
TRCY PMP 1.028
GOLDHILL 0.988
HURLEY S 1.008
CARMICAL 1.007
NORTHCTY 1.057
HURLEY
PROCTER 1.009
STA. A 1.056
MID CTY
EAST CTY
STA. B 1.056
HEDGE 1.056
SOUTHCTY
STA. D 1.056
BRIGHTON 30348
LOCKFORD 30482
HEDGE 1.008
CAMPBELL
LLNL
TRCY PMP 37585
HURLEY W 1.008
POCKET 1.009
BELLOTA 30500 1.008
WESTLEY
TRACY 1.057
TESLA D
ELKGROVE
RNCHSECO
TESLA E
COTTLE A
COTTLE B
TCY MP1 1.017
General Electric International, Inc. PSLF Program
MW/Pct
Tue Oct 16 13:49:21 2001
SMUD
rs05hs11, 2005 Heavy Summer Rancho Seco Generation Study Case
Rancho Seco Generation = 1000 MW, FPLE Generation = 560 MW
From Western FPLE Study Case 05s-pgepeak_fplesrev1
BASE CASE
sac-gb2.drw
t.wrk
Rating = 1

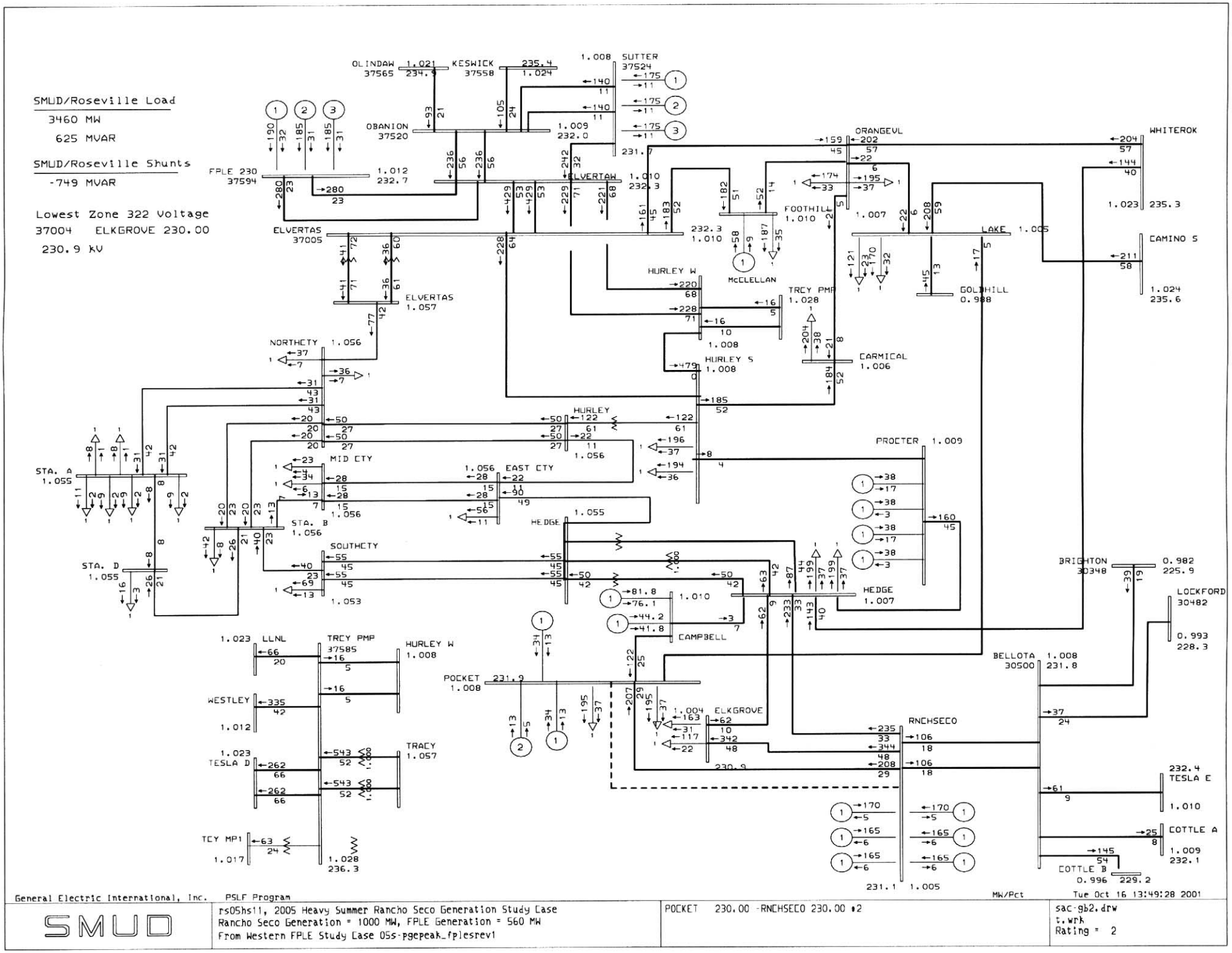
SMUD/Roseville Load
3460 MW
625 MVAR
SMUD/Roseville Shunts
-749 MVAR
Lowest Zone 322 Voltage
37004 ELKGROVE 230.00
230.9 kV
OLINDAW 37565
KESWICK 37558
SUTTER 37524
OBANION 37520
FPLE 230 37594
ELVERTAW
ELVERTAS 37005
ELVERTAS 1.057
NORTHCTY
HURLEY W
McCLELLAN
FOOTHILL
ORANGEVL
WHITEROK
LAKE
CAMINO 5
GOLDHILL
TRCY PMP 1.028
CARMICAL 1.006
HURLEY S 1.008
HURLEY
PROCTER 1.009
STA. A 1.055
MID CTY
EAST CTY
STA. B 1.056
HEDGE
STA. D 1.055
SOUTHCTY
BRIGHTON 30348
LOCKFORD 30482
HEDGE 1.007
CAMPBELL
LLNL
TRCY PMP 37585
HURLEY W 1.008
POCKET 231.9 1.008
WESTLEY
TESLA D
TRACY 1.057
TCY MP1
ELKGROVE
RNCHSECO
BELLOTA 30500 1.008 231.8
TESLA E
COTTLE A
COTTLE B
General Electric International, Inc. PSLF Program
SMUD
rs05hs11, 2005 Heavy Summer Rancho Seco Generation Study Case
Rancho Seco Generation = 1000 MW, FPLE Generation = 560 MW
From Western FPLE Study Case 05s-pgepeak_fplesrev1
POCKET 230.00 -RNCHSECO 230.00 #2
sac-gb2.drw
t.wrk
Rating = 2
MW/Pct
Tue Oct 16 13:49:28 2001

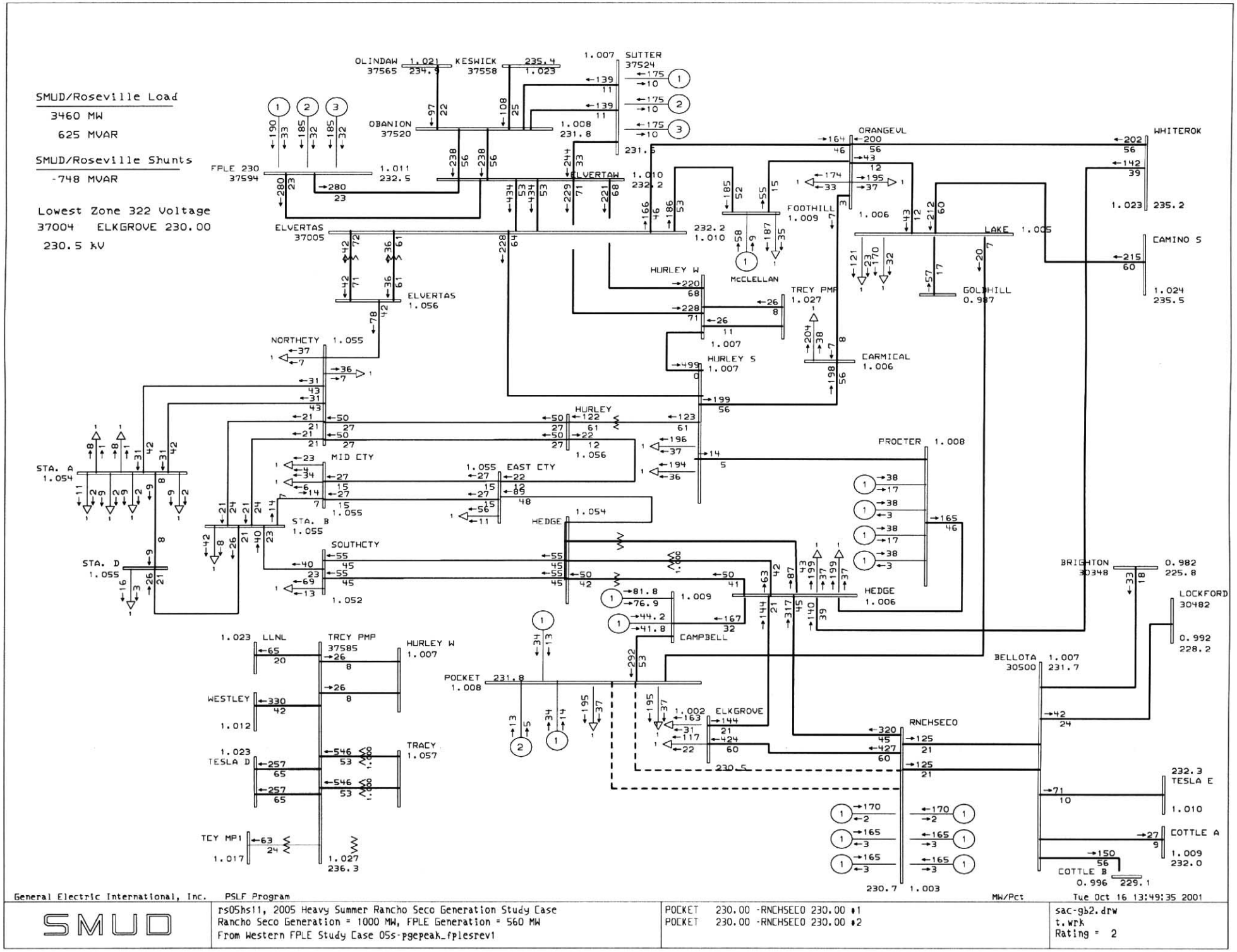
SMUD/Roseville Load
3460 MW
625 MVAR
SMUD/Roseville Shunts
-748 MVAR
Lowest Zone 322 Voltage
37004 ELKGROVE 230.00
230.5 kV
OLINDAW 1.021 234.9
KESWICK 235.4 1.023
1.007 SUTTER 37524
OBANION 37520
1.008 231.8
FPLE 230 37594
1.011 232.5
ELVERTAW 1.010 232.2
ORANGEVL
WHITEROK
FOOTHILL 1.009
1.006
LAKE 1.005
CAMINO S
ELVERTAS 37005
232.2 1.010
McCLELLAN
HURLEY W
TRCY PMP 1.027
GOLDHILL 0.987
ELVERTAS 1.056
NORTHCTY 1.055
HURLEY S 1.007
CARMICAL 1.006
HURLEY 122 1.056
PROCTER 1.008
STA. A 1.054
MID CTY
1.055 EAST CTY
STA. B 1.055
HEDGE 1.054
SOUTHCTY
STA. D 1.055
1.052
BRIGHTON 30348
0.982 225.8
LOCKFORD 30482
0.992 228.2
HEDGE 1.006
1.009
CAMPBELL
1.023 LLNL
TRCY PMP 37585
HURLEY W 1.007
POCKET 231.8 1.008
WESTLEY 330 42
1.012
1.023 TESLA D
TRACY 1.057
TCY MP1 1.017
1.027 236.3
1.002 ELKGROVE
230.5
RNCHSECO
BELLOTA 30500 1.007 231.7
232.3 TESLA E
1.010
COTTLE A
1.009 232.0
COTTLE B 0.996 229.1
230.7 1.003
General Electric International, Inc. PSLF Program
MW/Pct
Tue Oct 16 13:49:35 2001
SMUD
rs05hs11, 2005 Heavy Summer Rancho Seco Generation Study Case
Rancho Seco Generation = 1000 MW, FPLE Generation = 560 MW
From Western FPLE Study Case 05s-pgepeak_fplesrev1
POCKET 230.00 -RNCHSECO 230.00 #1
POCKET 230.00 -RNCHSECO 230.00 #2
sac-gb2.drw
t.wrk
Rating = 2

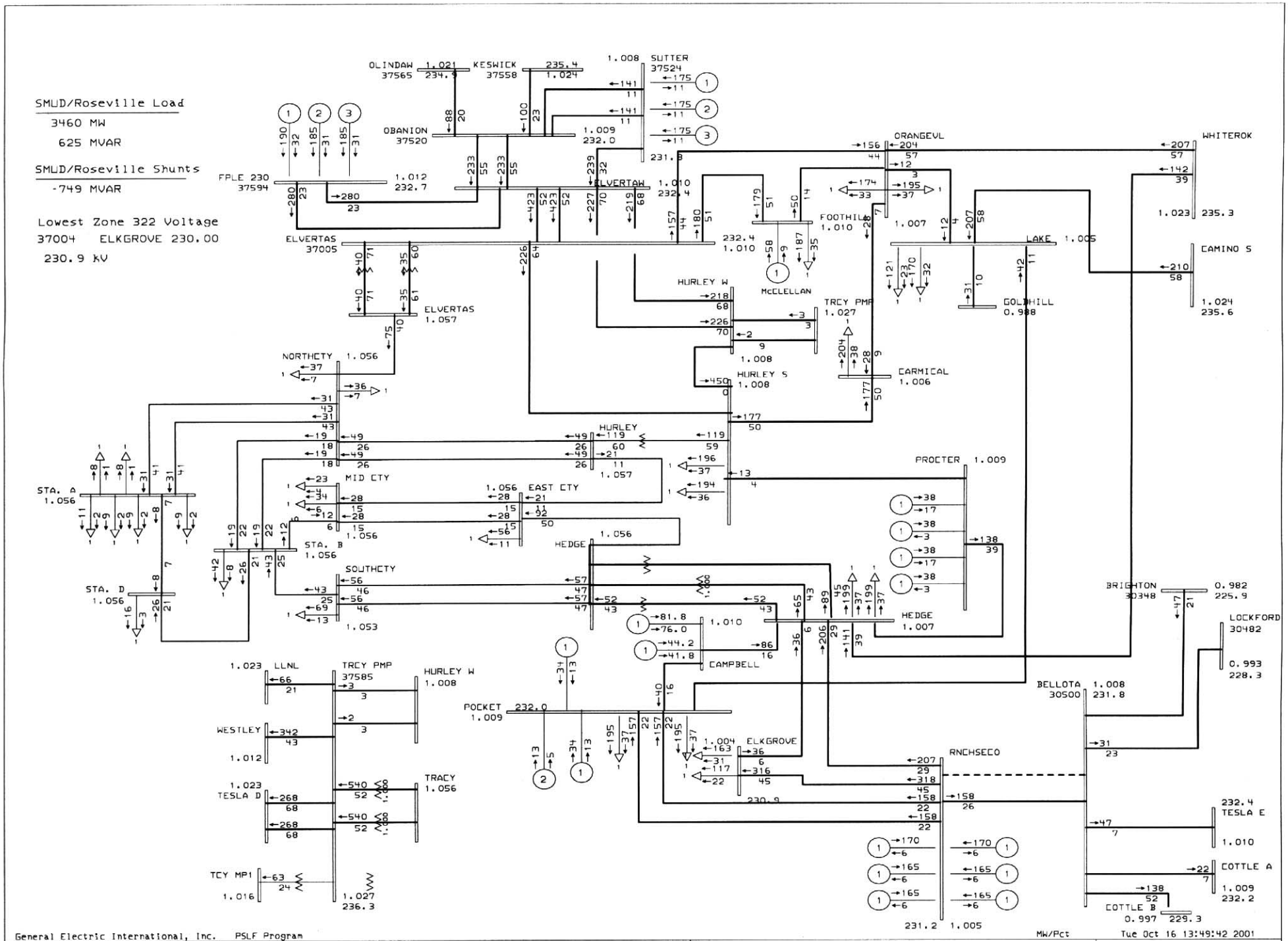
SMUD/Roseville Load
3460 MW
625 MVAR
SMUD/Roseville Shunts
-749 MVAR
Lowest Zone 322 Voltage
37004 ELKGROVE 230.00
230.9 kV
OLINDAW 37565
KESWICK 37558
SUTTER 37524
OBANION 37520
FPLE 230 37594
ELVERTAW
ORANGEVL
WHITEROK
FOOTHILL
LAKE
CAMINO S
ELVERTAS 37005
ELVERTAS 1.057
McCLELLAN
HURLEY W
TRCY PMP 1.027
GOLDHILL 0.988
NORTHCTY
HURLEY S
CARMICAL 1.006
HURLEY
PROCTER 1.009
STA. A 1.056
MID CTY
EAST CTY
STA. B 1.056
HEDGE
STA. D 1.056
SOUTHCTY
HEDGE 1.007
BRIGHTON 30348
LOCKFORD 30482
CAMPBELL
LLNL
TRCY PMP 37585
HURLEY W 1.008
POCKET 1.009
BELLOTA 30500
WESTLEY
ELKGROVE
RNCHSECO
TESLA D
TRACY 1.056
TESLA E
TCY MP1
COTTLE A
COTTLE B
General Electric International, Inc. PSLF Program
MW/Pct
Tue Oct 16 13:49:42 2001
SMUD
rs05hs11, 2005 Heavy Summer Rancho Seco Generation Study Case
Rancho Seco Generation = 1000 MW, FPLE Generation = 560 MW
From Western FPLE Study Case 05s-pgepeak_fplesrev1
RNCHSECO 230.00 -BELLOTA 230.00 #1
sac-gb2.drw
t.wrk
Rating = 2

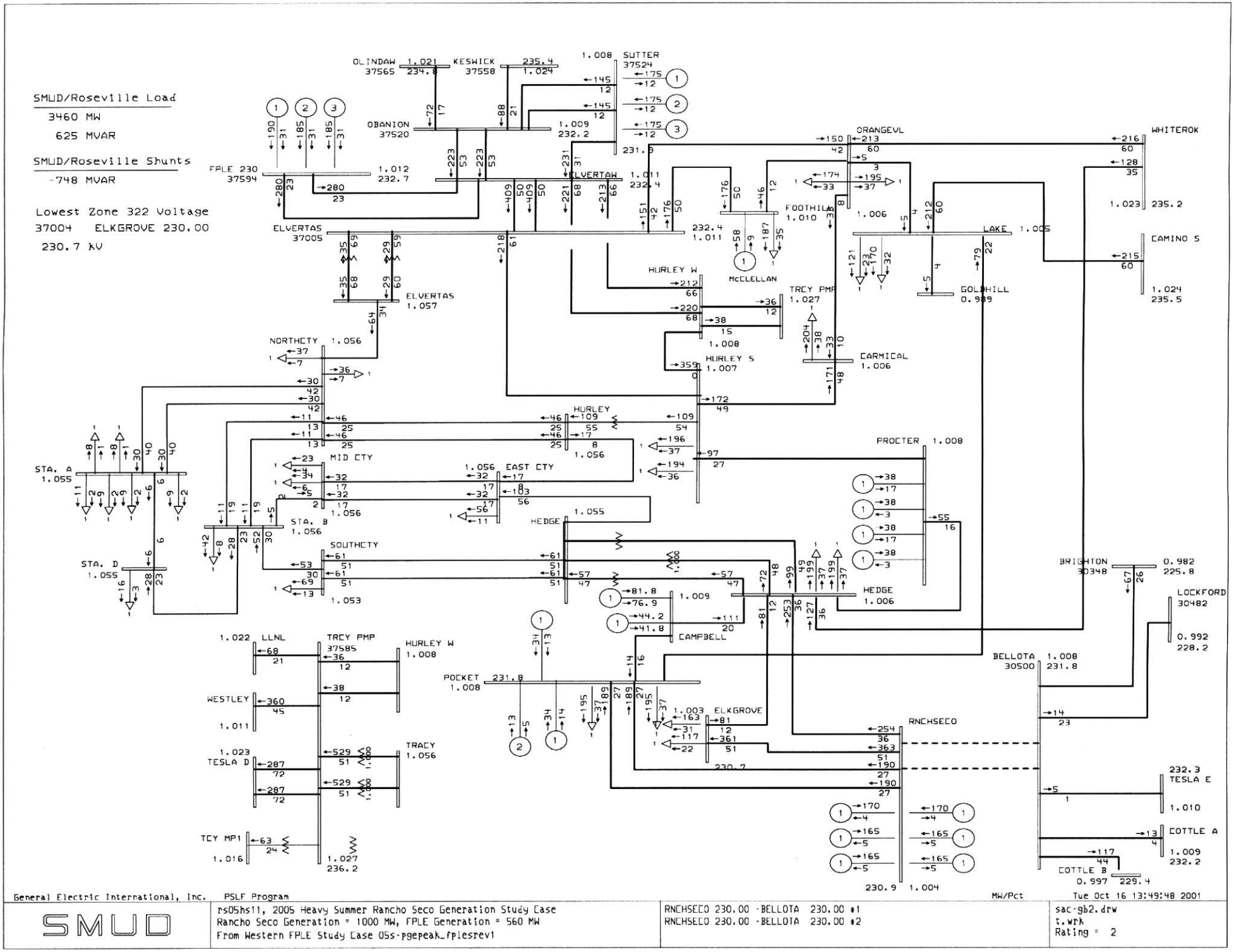
SMUD/Roseville Load
3460 MW
625 MVAR
SMUD/Roseville Shunts
-748 MVAR
Lowest Zone 322 Voltage
37004 ELKGROVE 230.00
230.7 kV
OLINDAW 37565
KESWICK 37558
SUTTER 37524
OBANION 37520
FPLE 230 37594
ELVERTAW
ELVERTAS 37005
ELVERTAS 1.057
ORANGEVL
WHITEROK
FOOTHILL 1.010
LAKE
CAMINO 5
McCLELLAN
HURLEY W
TRCY PMP 1.027
GOLDHILL 0.989
HURLEY S 1.007
CARMICAL 1.006
NORTHCTY
HURLEY
PROCTER 1.008
STA. A 1.055
MID CTY
EAST CTY
STA. B 1.056
HEDGE
STA. D 1.055
SOUTHCTY
BRIGHTON 30348
LOCKFORD 30482
HEDGE 1.006
CAMPBELL
LLNL
TRCY PMP 37585
HURLEY W 1.008
BELLOTA 30500
POCKET 1.008
WESTLEY
ELKGROVE
RNCHSECO
TRACY 1.056
TESLA D
TESLA E
TCY MP1
COTTLE A
COTTLE B
General Electric International, Inc. PSLF Program
MW/Pct
Tue Oct 16 13:49:48 2001
SMUD
rs05hs11, 2005 Heavy Summer Rancho Seco Generation Study Case
Rancho Seco Generation = 1000 MW, FPLE Generation = 560 MW
From Western FPLE Study Case 05s-pgepeak_fplesrev1
RNCHSECO 230.00 -BELLOTA 230.00 #1
RNCHSECO 230.00 -BELLOTA 230.00 #2
sac-gb2.drw
t.wrk
Rating = 2

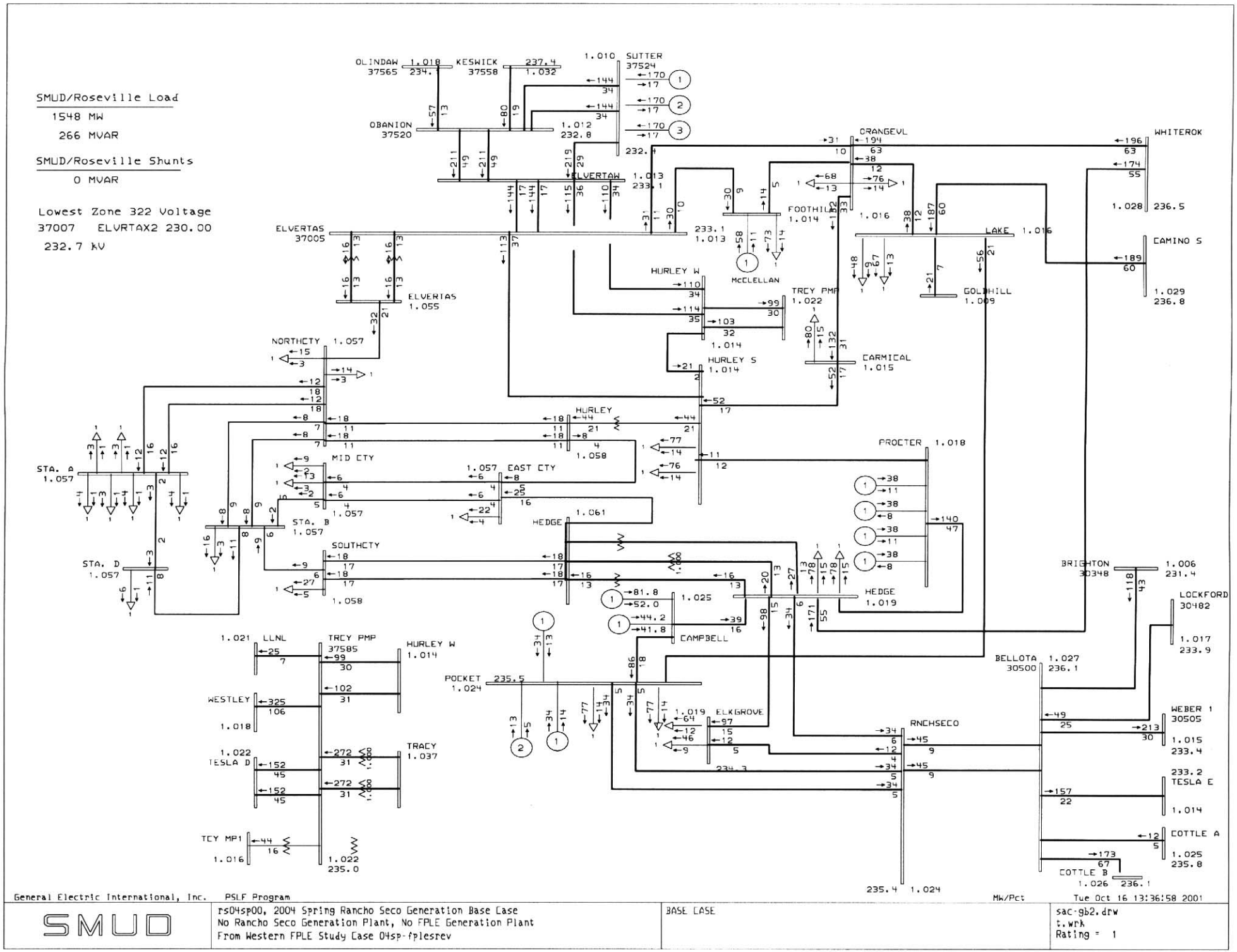
SMUD/Roseville Load
1548 MW
266 MVAR
SMUD/Roseville Shunts
0 MVAR
Lowest Zone 322 Voltage
37007 ELVRTAX2 230.00
232.7 kV
OLINDAW 1.018 234.1
37565
KESWICK 237.4
37558 1.032
1.010 SUTTER
37524
OBANION
37520
1.012
232.8
ELVERTAW
1.013
233.1
ELVERTAS
37005
ELVERTAS
1.055
NORTHCTY 1.057
STA. A
1.057
MID CTY
1.057
STA. B
1.057
STA. D
1.057
SOUTHCTY
1.058
EAST CTY
1.057
HURLEY
1.058
HEDGE
1.061
HURLEY W
1.014
McCLELLAN
TRCY PMP
1.022
HURLEY S
1.014
CARMICAL
1.015
FOOTHILL
1.014
1.016
ORANGEVL
LAKE
1.016
GOLDHILL
1.009
WHITEROK
1.028 236.5
CAMINO S
1.029
236.8
PROCTER 1.018
HEDGE
1.019
BRIGHTON
30348
1.006
231.4
LOCKFORD
30482
1.017
233.9
BELLOTA 1.027
30500 236.1
WEBER 1
30505
1.015
233.4
233.2
TESLA E
1.014
COTTLE A
1.025
235.8
COTTLE B
1.026 236.1
RNCHSECO
235.4 1.024
ELKGROVE
1.019
234.3
CAMPBELL
1.025
POCKET 235.5
1.024
1.021 LLNL
TRCY PMP
37585
HURLEY W
1.014
WESTLEY
1.018
TRACY
1.037
1.022
TESLA D
TCY MP1
1.016
1.022
235.0
General Electric International, Inc. PSLF Program
Mk/Pct
Tue Oct 16 13:36:58 2001
SMUD
rs04sp00, 2004 Spring Rancho Seco Generation Base Case
No Rancho Seco Generation Plant, No FPLE Generation Plant
From Western FPLE Study Case 04sp-fplesrev
BASE CASE
sac-gb2.drw
t.wrk
Rating = 1

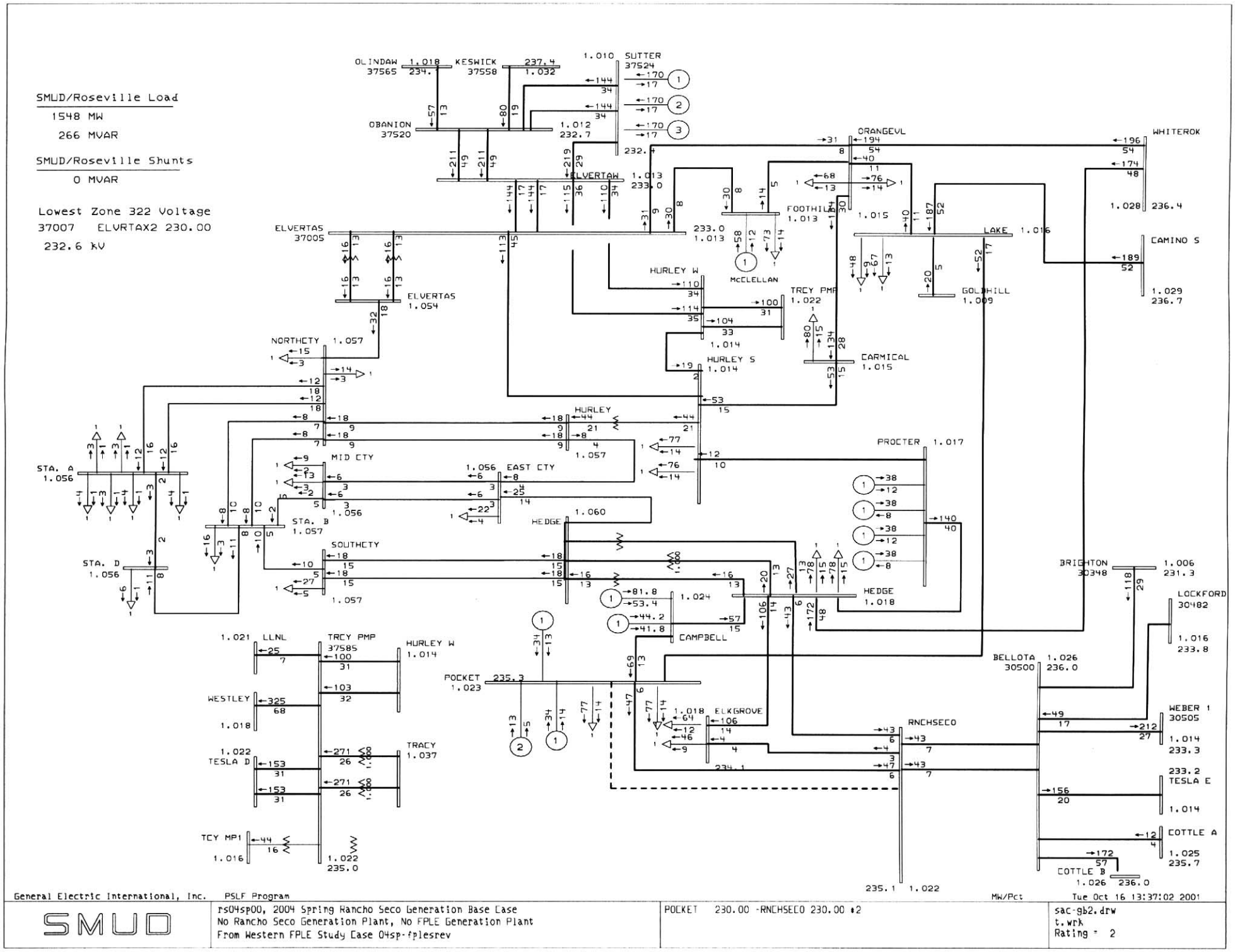
SMUD/Roseville Load
1548 MW
266 MVAR
SMUD/Roseville Shunts
0 MVAR
Lowest Zone 322 Voltage
37007 ELVRTAX2 230.00
232.6 kV
OLINDAW 37565
KESWICK 37558
SUTTER 37524
OBANION 37520
ELVERTAW
ELVERTAS 37005
ELVERTAS 1.054
ORANGEVL
WHITEROK
FOOTHILL 1.013
LAKE 1.016
CAMINO S
McCLELLAN
HURLEY W
TRCY PMP 1.022
GOLDHILL 1.009
NORTHCTY 1.057
HURLEY S 1.014
CARMICAL 1.015
HURLEY
PROCTER 1.017
STA. A 1.056
MID CTY
EAST CTY
STA. B 1.057
HEDGE 1.060
STA. D 1.056
SOUTHCTY
HEDGE 1.018
BRIGHTON 30348
LOCKFORD 30482
CAMPBELL
LLNL
TRCY PMP 37585
HURLEY W 1.014
POCKET 235.3 1.023
BELLOTA 30500 1.026 236.0
WESTLEY
ELKGROVE
RNCHSECO
WEBER 1 30505
TRACY 1.037
TESLA D
TESLA E
TCY MP1
COTTLE A
COTTLE B
General Electric International, Inc. PSLF Program
MW/Pct
Tue Oct 16 13:37:02 2001
SMUD
rs04sp00, 2004 Spring Rancho Seco Generation Base Case
No Rancho Seco Generation Plant, No FPLE Generation Plant
From Western FPLE Study Case 04sp-fplesrev
POCKET 230.00 -RNCHSECO 230.00 #2
sac-gb2.drw
t.wrk
Rating = 2

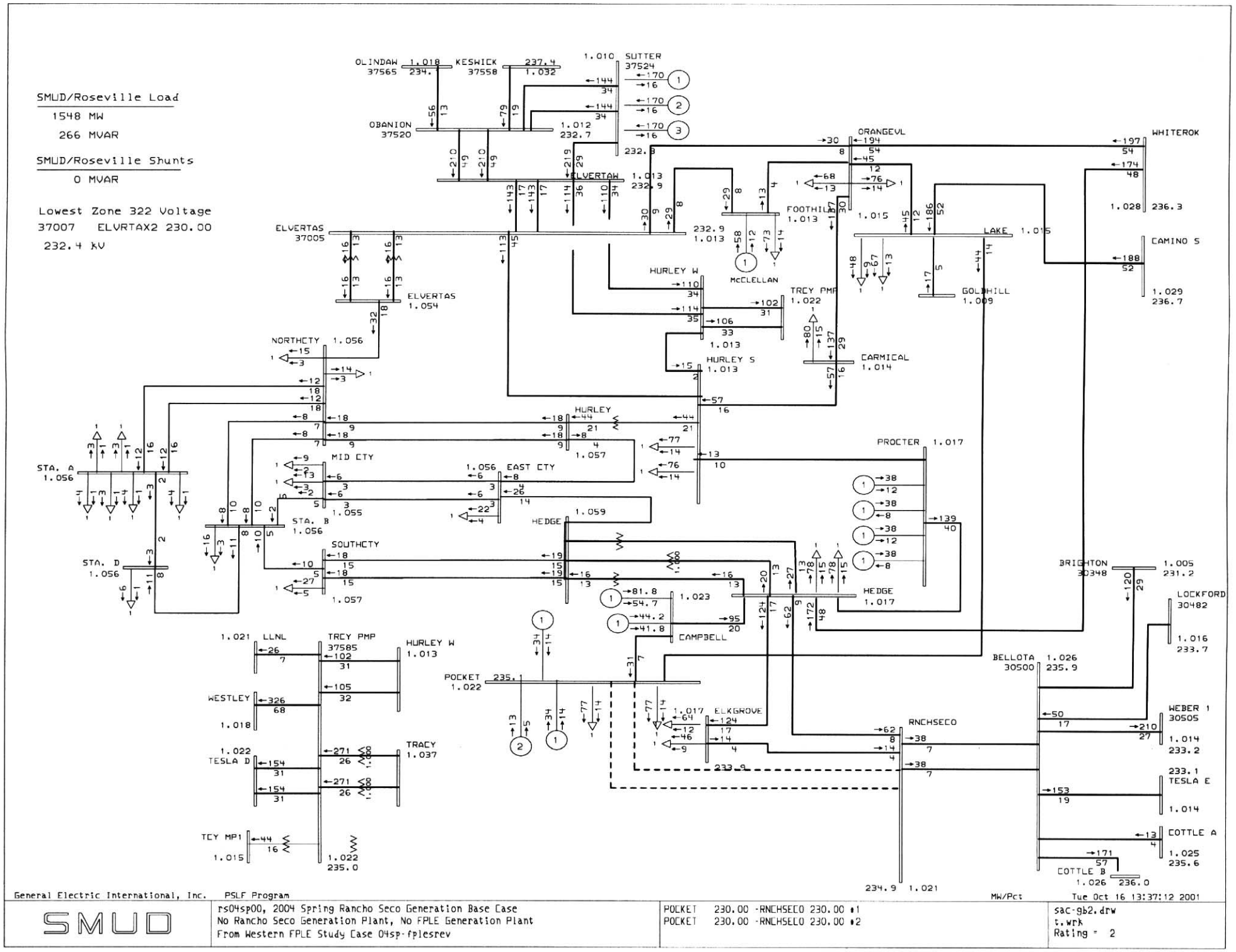
SMUD/Roseville Load
1548 MW
266 MVAR
SMUD/Roseville Shunts
0 MVAR
Lowest Zone 322 Voltage
37007 ELVRTAX2 230.00
232.4 kV
OLINDAW 1.018 234.
37565
KESWICK 237.4 1.032
37558
1.010 SUTTER
37524
OBANION
37520
1.012 232.7
ELVERTAW 1.013 232.9
ORANGEVL
WHITEROK
1.028 236.3
FOOTHILL 1.013
1.015
LAKE 1.015
CAMINO S
1.029 236.7
ELVERTAS
37005
ELVERTAS 1.054
HURLEY W
McCLELLAN
TRCY PMP 1.022
GOLDHILL 1.009
NORTHCTY 1.056
HURLEY S 1.013
CARMICAL 1.014
HURLEY
1.057
PROCTER 1.017
STA. A 1.056
MID CTY
1.056 EAST CTY
1.055
STA. B 1.056
HEDGE 1.059
SOUTHCTY
STA. D 1.056
1.057
1.023
HEDGE 1.017
BRIGHTON 30348
1.005 231.2
LOCKFORD 30482
1.016 233.7
CAMPBELL
1.021 LLNL
TRCY PMP 37585
HURLEY W 1.013
POCKET 235. 1.022
BELLOTA 30500 1.026 235.9
WESTLEY 1.018
1.017 ELKGROVE
RNCHSECO
WEBER 1 30505
1.014 233.2
1.022 TESLA D
TRACY 1.037
233.9
233.1 TESLA E
1.014
TCY MP1 1.015
1.022 235.0
COTTLE A
1.025 235.6
COTTLE B 1.026 236.0
234.9 1.021
General Electric International, Inc. PSLF Program
MW/Pct
Tue Oct 16 13:37:12 2001
SMUD
rs04sp00, 2004 Spring Rancho Seco Generation Base Case
No Rancho Seco Generation Plant, No FPLE Generation Plant
From Western FPLE Study Case 04sp-fplesrev
POCKET 230.00 -RNCHSECO 230.00 #1
POCKET 230.00 -RNCHSECO 230.00 #2
sac-gb2.drw
t.wrk
Rating = 2

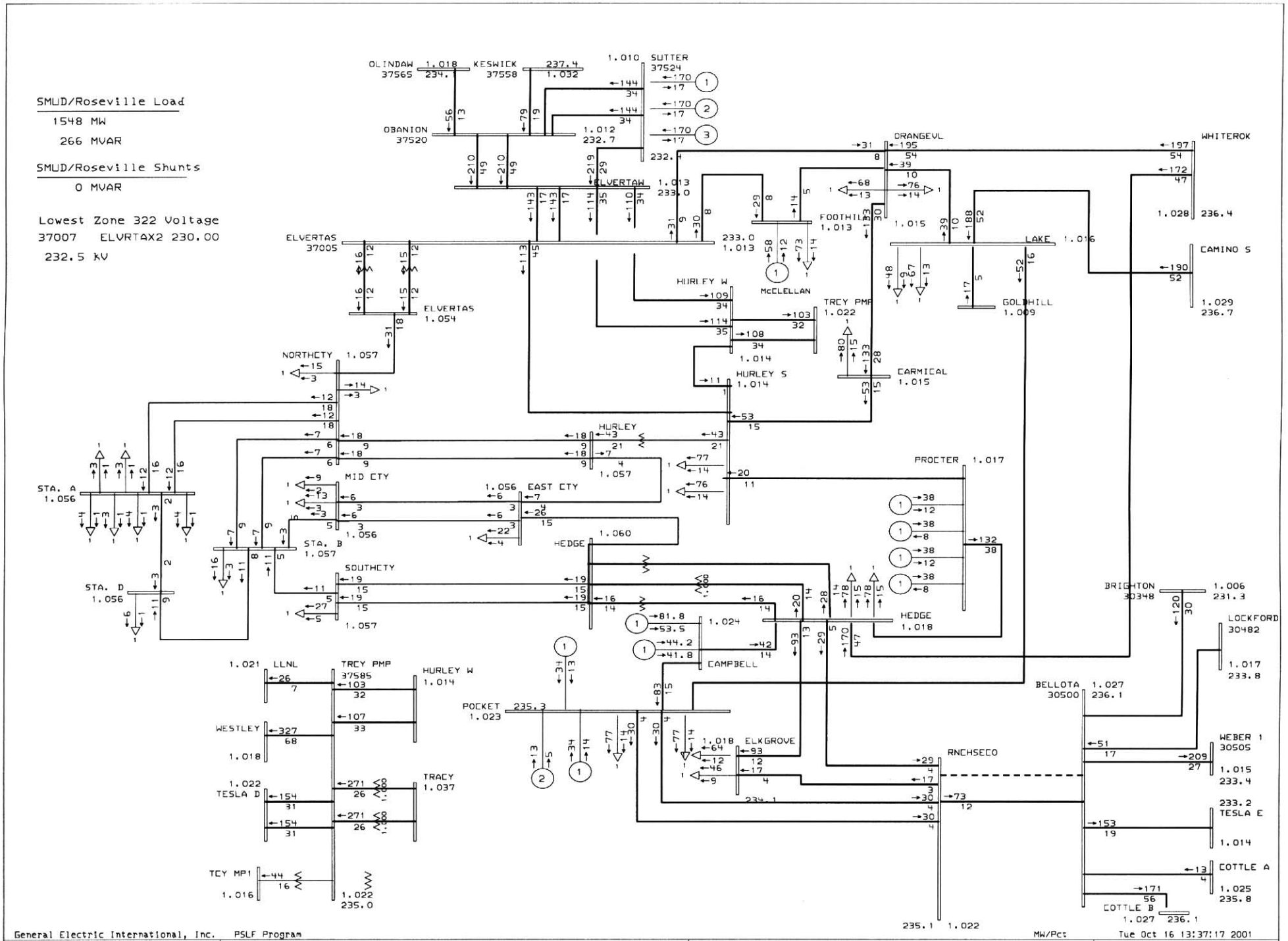
SMUD/Roseville Load
1548 MW
266 MVAR
SMUD/Roseville Shunts
0 MVAR
Lowest Zone 322 Voltage
37007 ELVRTAX2 230.00
232.5 kV
OLINDAW 1.018 234.1
37565
KESWICK 237.4
37558 1.032
1.010 SUTTER
37524
OBANION
37520
1.012
232.7
ELVERTAW 1.013
233.0
ELVERTAS
37005
ELVERTAS
1.054
NORTHCTY 1.057
HURLEY W
McCLELLAN
FOOTHILL
1.013
1.015
DRANGEVL
WHITEROK
1.028 236.4
CAMINO S
1.029
236.7
LAKE 1.016
GOLDHILL
1.009
TRCY PMP
1.022
CARMICAL
1.015
HURLEY S
1.014
HURLEY
1.057
PROCTER 1.017
STA. A
1.056
MID CTY
1.056
EAST CTY
STA. B
1.057
HEDGE
1.060
STA. D
1.056
SOUTHCTY
1.057
HEDGE
1.018
BRIGHTON
30348
1.006
231.3
LOCKFORD
30482
1.017
233.8
1.024
CAMPBELL
1.021 LLNL
TRCY PMP
37585
HURLEY W
1.014
POCKET 235.3
1.023
WESTLEY
1.018
1.022
TESLA D
TRACY
1.037
TCY MP1
1.016
1.022
235.0
ELKGROVE
1.018
RNCHSECO
BELLOTA 1.027
30500 236.1
WEBER 1
30505
1.015
233.4
233.2
TESLA E
1.014
COTTLE A
1.025
235.8
COTTLE B
1.027 236.1
235.1 1.022
General Electric International, Inc. PSLF Program
MW/Pct
Tue Oct 16 13:37:17 2001
SMUD
rs04sp00, 2004 Spring Rancho Seco Generation Base Case
No Rancho Seco Generation Plant, No FPLE Generation Plant
From Western FPLE Study Case 04sp-fplesrev
RNCHSECO 230.00 -BELLOTA 230.00 #1
sac-gb2.drw
t.wrk
Rating = 2

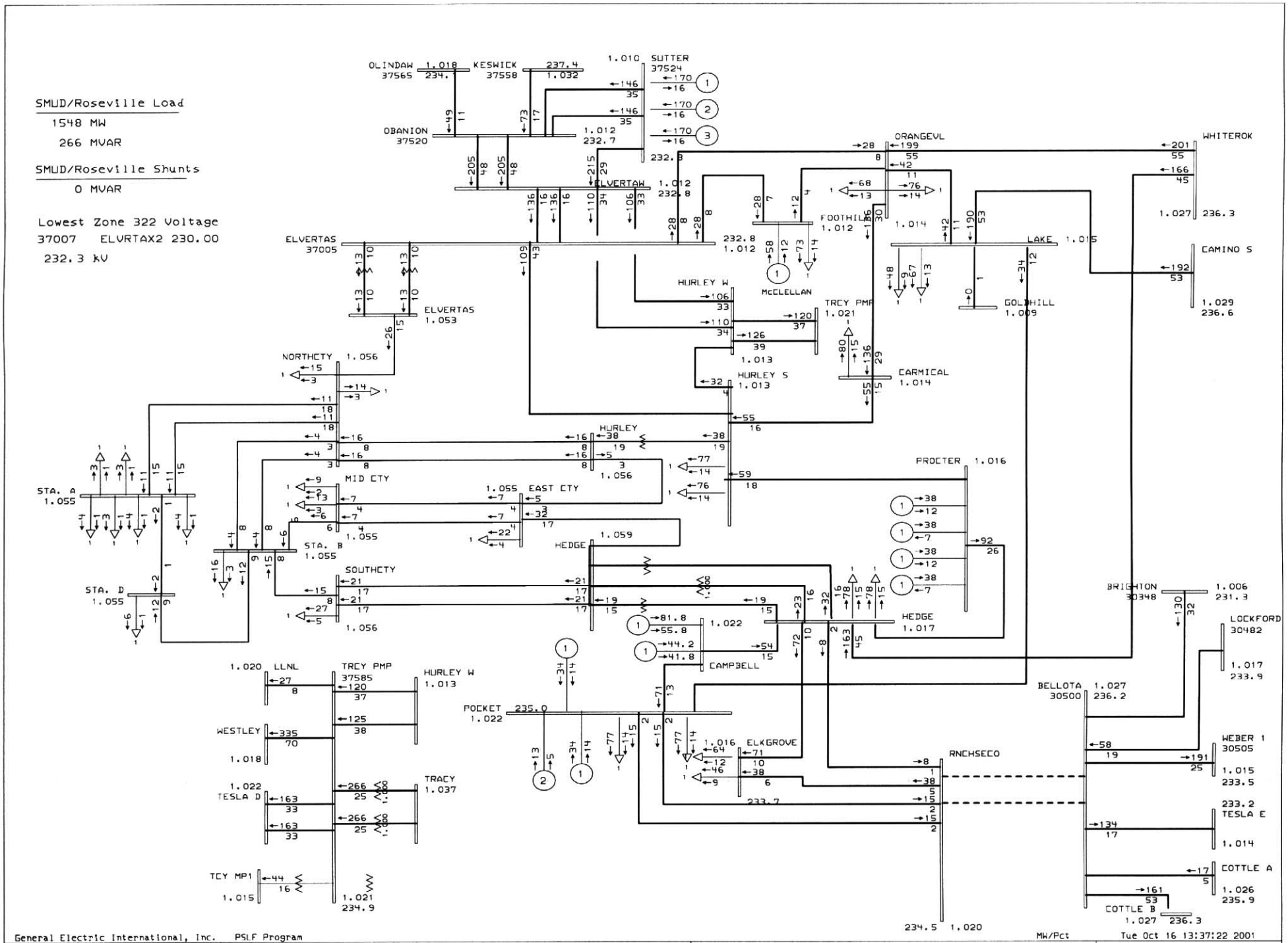
SMUD/Roseville Load
1548 MW
266 MVAR
SMUD/Roseville Shunts
0 MVAR
Lowest Zone 322 Voltage
37007 ELVRTAX2 230.00
232.3 kV
OLINDAW 37565
KESWICK 37558
SUTTER 37524
OBANION 37520
ELVERTAW
ELVERTAS 37005
ELVERTAS 1.053
NORTHCTY
HURLEY W
HURLEY S
HURLEY
McCLELLAN
TRCY PMP 1.021
FOOTHILL 1.012
ORANGEVL
WHITEROK
LAKE
CAMINO S
GOLDHILL 1.009
CARMICAL 1.014
PROCTER 1.016
STA. A 1.055
STA. B 1.055
STA. D 1.055
MID CTY
EAST CTY
SOUTHCTY
HEDGE
HEDGE 1.017
CAMPBELL
POCKET 235.0
ELKGROVE
RNCHSECO
BRIGHTON 30348
LOCKFORD 30482
BELLOTA 30500
WEBER 1 30505
TESLA E
COTTLE A
COTTLE B
LLNL
TRCY PMP 37585
WESTLEY
TESLA D
TRACY 1.037
TCY MP1
General Electric International, Inc. PSLF Program
MW/Pct
Tue Oct 16 13:37:22 2001
SMUD
rs04sp00, 2004 Spring Rancho Seco Generation Base Case
No Rancho Seco Generation Plant, No FPLE Generation Plant
From Western FPLE Study Case 04sp-fplesrev
RNCHSECO 230.00 -BELLOTA 230.00 #1
RNCHSECO 230.00 -BELLOTA 230.00 #2
sac-gb2.drw
t.wrk
Rating = 2

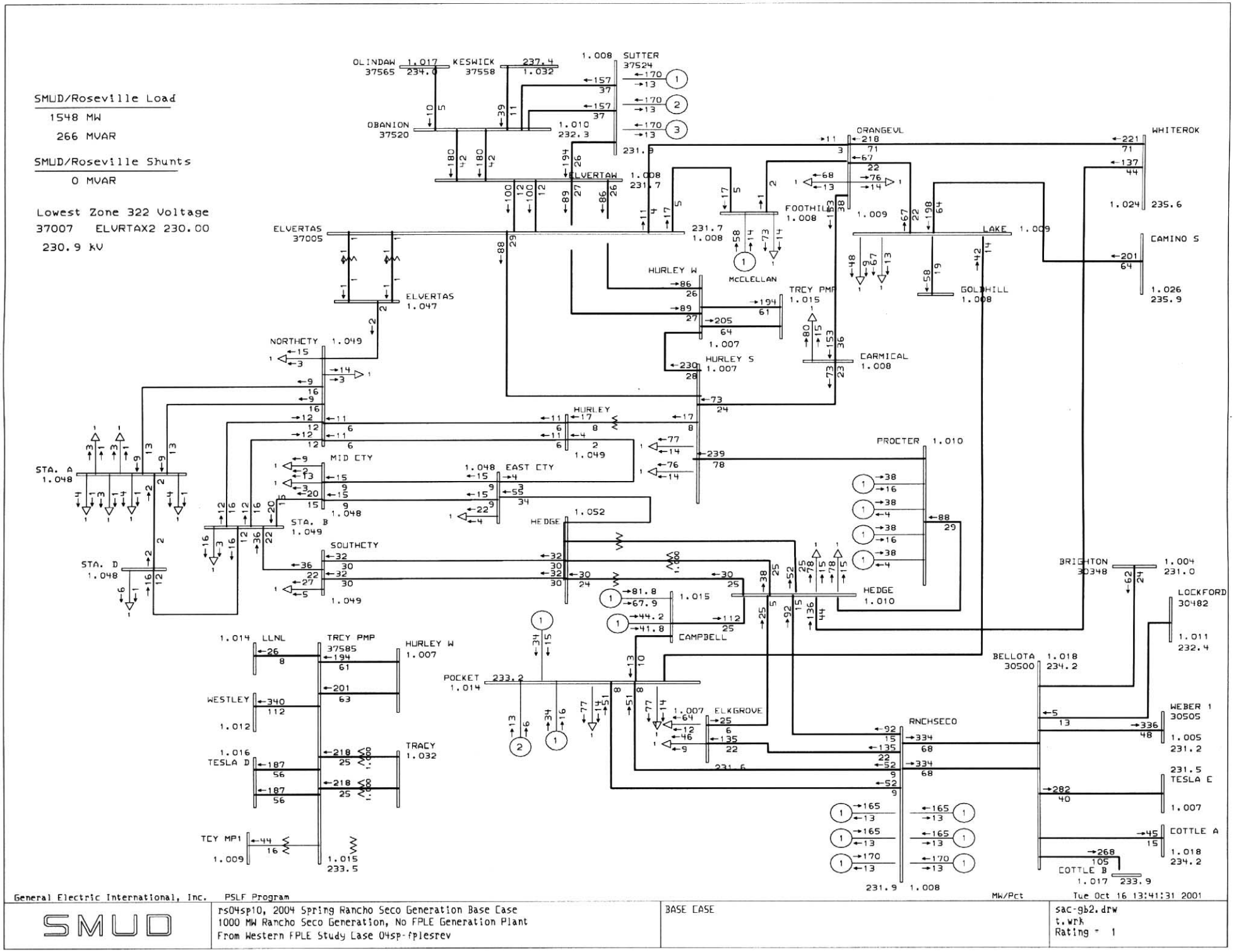
SMUD/Roseville Load
1548 MW
266 MVAR
SMUD/Roseville Shunts
0 MVAR
Lowest Zone 322 Voltage
37007 ELVRTAX2 230.00
230.9 kV
OLINDAW 37565
KESWICK 37558
SUTTER 37524
OBANION 37520
ELVERTAW
ELVERTAS 37005
ELVERTAS 1.047
NORTHCTY
HURLEY W
HURLEY S
HURLEY
MCCLELLAN
TRCY PMP 1.015
CARMICAL 1.008
FOOTHILL 1.008
ORANGEVL
WHITEROK
CAMINO S
LAKE
GOLDHILL 1.008
STA. A 1.048
STA. B 1.049
STA. D 1.048
MID CTY
EAST CTY
SOUTHCTY
HEDGE
PROCTER 1.010
BRIGHTON 30348
LOCKFORD 30482
BELLOTA 30500
WEBER 1 30505
TESLA E
COTTLE A
COTTLE B
RNCHSECO
ELKGROVE
CAMPBELL
POCKET 233.2
LLNL
TRCY PMP 37585
WESTLEY
TESLA D
TRACY 1.032
TCY MP1
General Electric International, Inc.
PSLF Program
MW/Pct
Tue Oct 16 13:41:31 2001
SMUD
rs04sp10, 2004 Spring Rancho Seco Generation Base Case
1000 MW Rancho Seco Generation, No FPLE Generation Plant
From Western FPLE Study Case 04sp-fplesrev
BASE CASE
sac-gb2.drw
t.wrk
Rating = 1

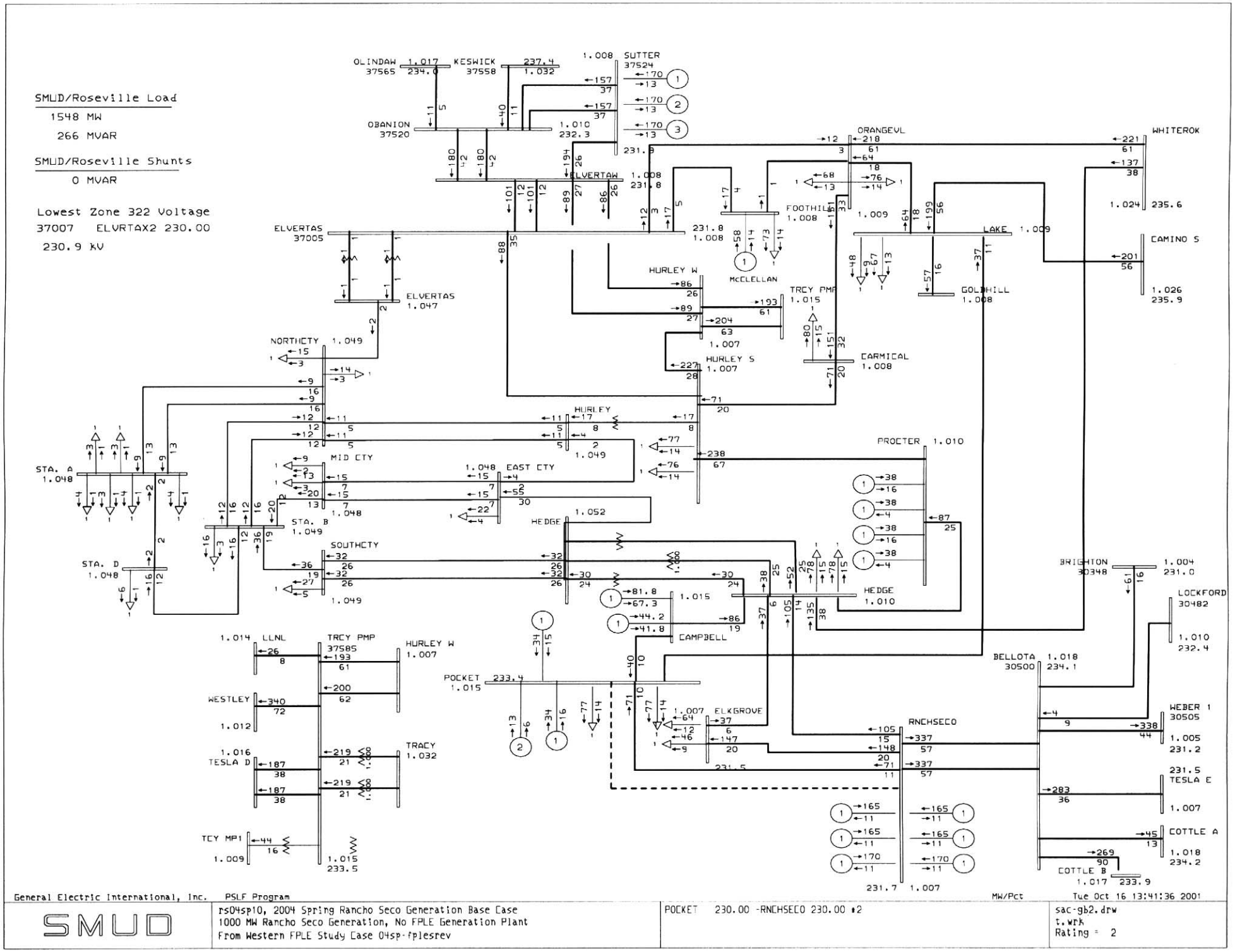
SMUD/Roseville Load
1548 MW
266 MVAR
SMUD/Roseville Shunts
0 MVAR
Lowest Zone 322 Voltage
37007 ELVRTAX2 230.00
230.9 kV
OLINDAW 1.017 234.0
KESWICK 237.4 1.032
SUTTER 37524 1.008
OBANION 37520 1.010 232.3
ELVERTAW 1.008 231.8
ORANGEVL 218 231.8
WHITEROK 1.024 235.6
FOOTHIL 1.008
LAKE 1.009
CAMINO S 1.026 235.9
ELVERTAS 37005 231.8 1.008
ELVERTAS 1.047
McCLELLAN
HURLEY W
TRCY PMP 1.015
GOLDHILL 1.008
NORTHCTY 1.049
HURLEY S 1.007
CARMICAL 1.008
HURLEY
PROCTER 1.010
STA. A 1.048
MID CTY
EAST CTY 1.048
STA. B 1.049
HEDGE 1.052
STA. D 1.048
SOUTHCTY 1.049
BRIGHTON 30348 1.004 231.0
HEDGE 1.010
LOCKFORD 30482 1.010 232.4
1.015
CAMPBELL
1.014 LLNL
TRCY PMP 37585
HURLEY W 1.007
BELLOTA 30500 1.018 234.1
POCKET 233.4 1.015
WESTLEY 1.012
1.007 ELKGROVE
RNCHSECO
WEBER 1 30505 1.005 231.2
1.016 TESLA D
TRACY 1.032
231.5 TESLA E 1.007
TCY MP1 1.009
1.015 233.5
COTTLE A 1.018 234.2
COTTLE B 1.017 233.9
231.7 1.007
General Electric International, Inc. PSLF Program
MW/Pct
Tue Oct 16 13:41:36 2001
SMUD
rs04sp10, 2004 Spring Rancho Seco Generation Base Case
1000 MW Rancho Seco Generation, No FPLE Generation Plant
From Western FPLE Study Case 04sp-fplesrev
POCKET 230.00 -RNCHSECO 230.00 #2
sac-gb2.drw
t.wrk
Rating = 2

SMUD/Roseville Load

1548 MW

266 MVAR

SMUD/Roseville Shunts

0 MVAR

Lowest Zone 322 Voltage

37007 ELVRTAX2 230.00

230.9 kV

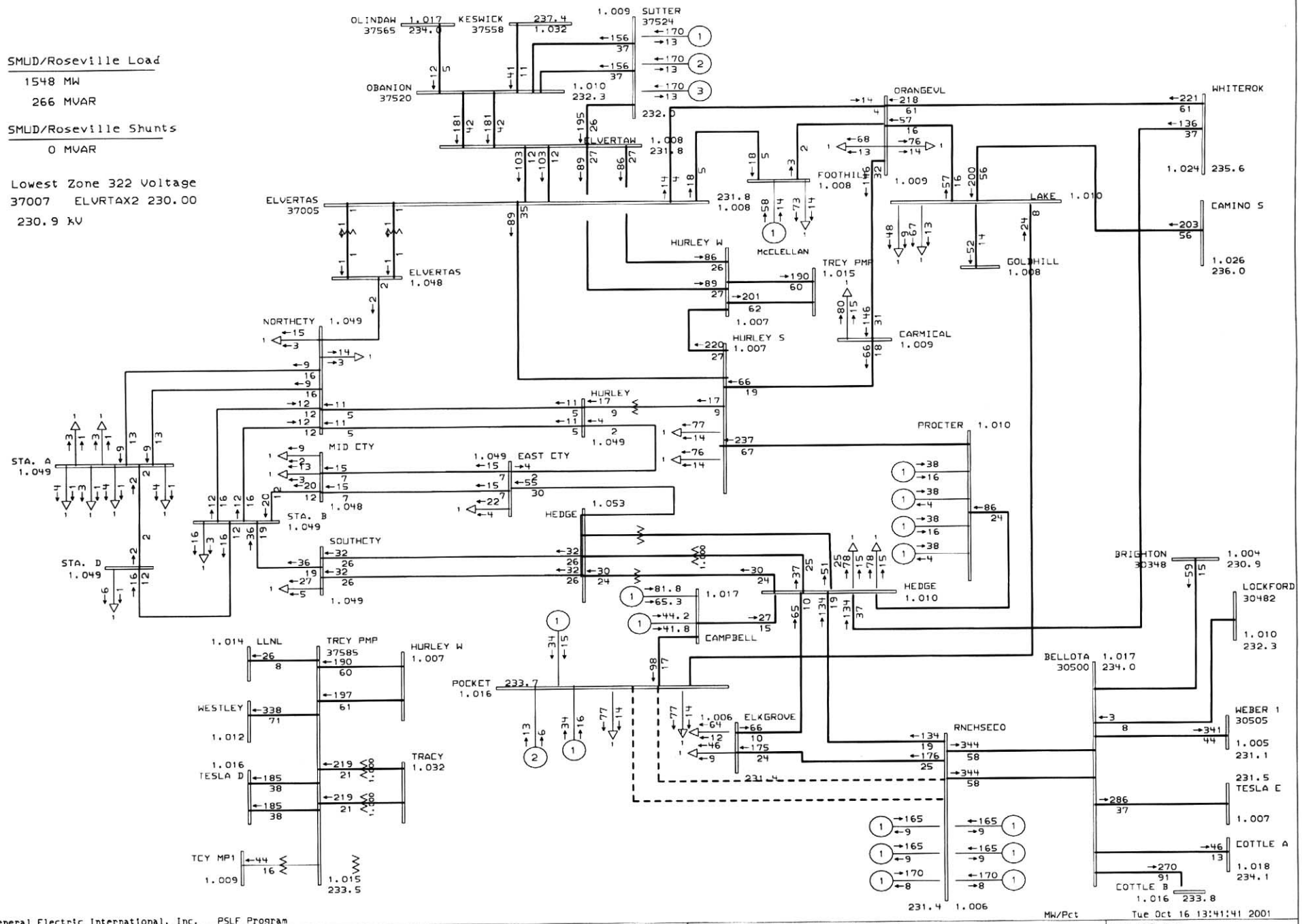

General Electric International, Inc. PSLF Program

SMUD

rs04sp10, 2004 Spring Rancho Seco Generation Base Case
1000 MW Rancho Seco Generation, No FPLE Generation Plant
From Western FPLE Study Case 04sp-fplesrev

POCKET 230.00 -RNCHSECO 230.00 #1
POCKET 230.00 -RNCHSECO 230.00 #2

sac-gb2.drw
t.wrk
Rating = 2

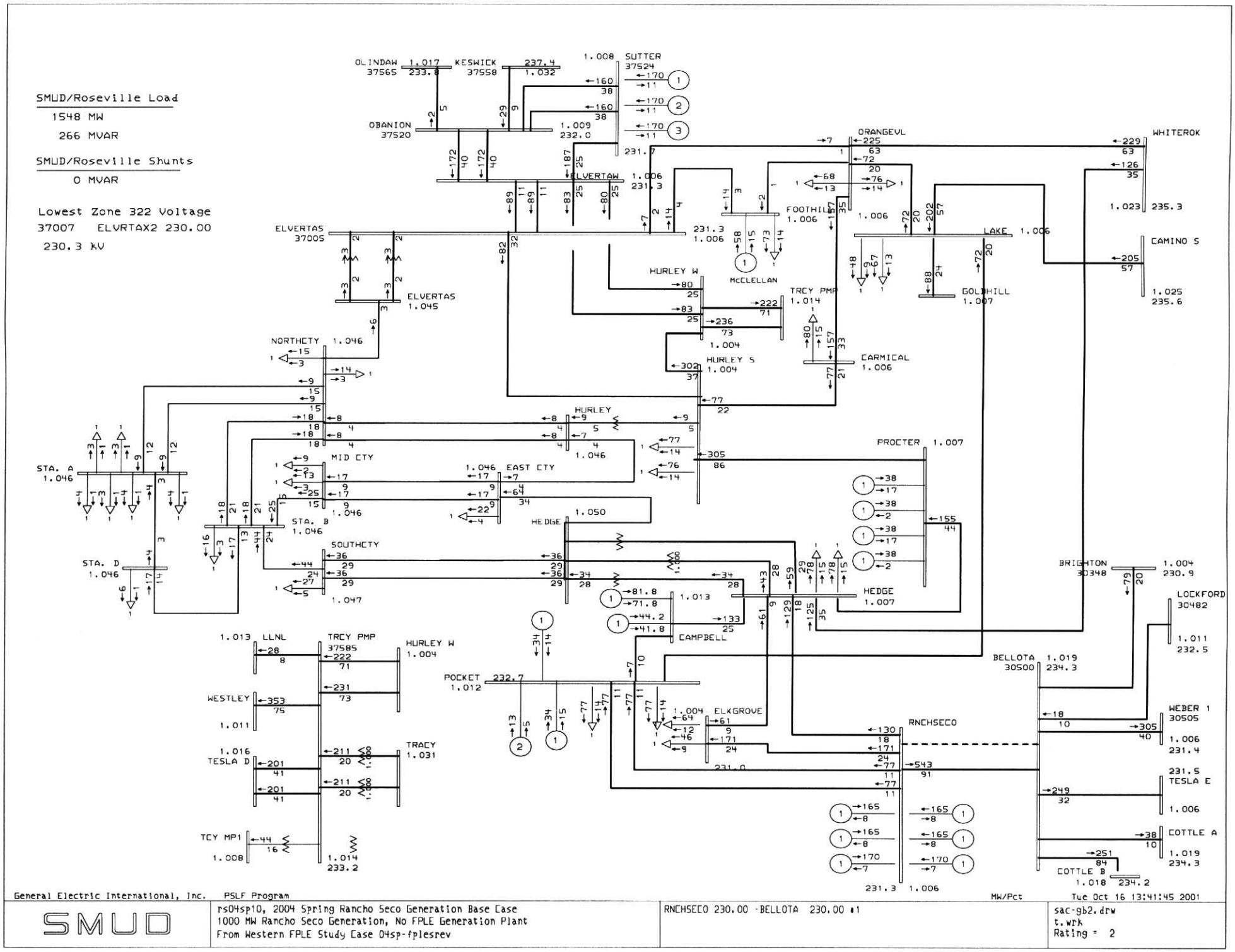
SMUD/Roseville Load
1548 MW
266 MVAR
SMUD/Roseville Shunts
0 MVAR
Lowest Zone 322 Voltage
37007 ELVRTAX2 230.00
230.3 kV
OLINDAW 37565 1.017 233.8
KESWICK 37558 237.4 1.032
1.008 SUTTER 37524
OBANION 37520
1.009 232.0
ELVERTAW 1.006 231.3
ELVERTAS 37005
ELVERTAS 1.045
NORTHCTY 1.046
HURLEY W
McCLELLAN
TRCY PMP 1.014
HURLEY S 1.004
CARMICAL 1.006
FOOTHILL 1.006
ORANGEVL
WHITEROK
LAKE 1.006
GOLDHILL 1.007
CAMINO S
1.023 235.3
1.025 235.6
HURLEY
1.046
PROCTER 1.007
STA. A 1.046
MID CTY
EAST CTY
STA. B 1.046
HEDGE 1.050
STA. D 1.046
SOUTHCTY
1.047
HEDGE 1.007
BRIGHTON 30348 1.004 230.9
LOCKFORD 30482
1.011 232.5
1.013
CAMPBELL
LLNL
TRCY PMP 37585
HURLEY W 1.004
POCKET 1.012 232.7
BELLOTA 30500 1.019 234.3
WESTLEY 1.011
1.004 ELKGROVE
RNCHSECO
WEBER 1 30505
1.006 231.4
1.016 TESLA D
TRACY 1.031
231.5 TESLA E
1.006
TCY MP1 1.008
1.014 233.2
COTTLE A
1.019 234.3
COTTLE B 1.018 234.2
General Electric International, Inc. PSLF Program
MW/Pct
Tue Oct 16 13:41:45 2001
SMUD
rs04sp10, 2004 Spring Rancho Seco Generation Base Case
1000 MW Rancho Seco Generation, No FPLE Generation Plant
From Western FPLE Study Case 04sp-fplesrev
RNCHSECO 230.00 -BELLOTA 230.00 #1
sac-gb2.drw
t.wrk
Rating = 2

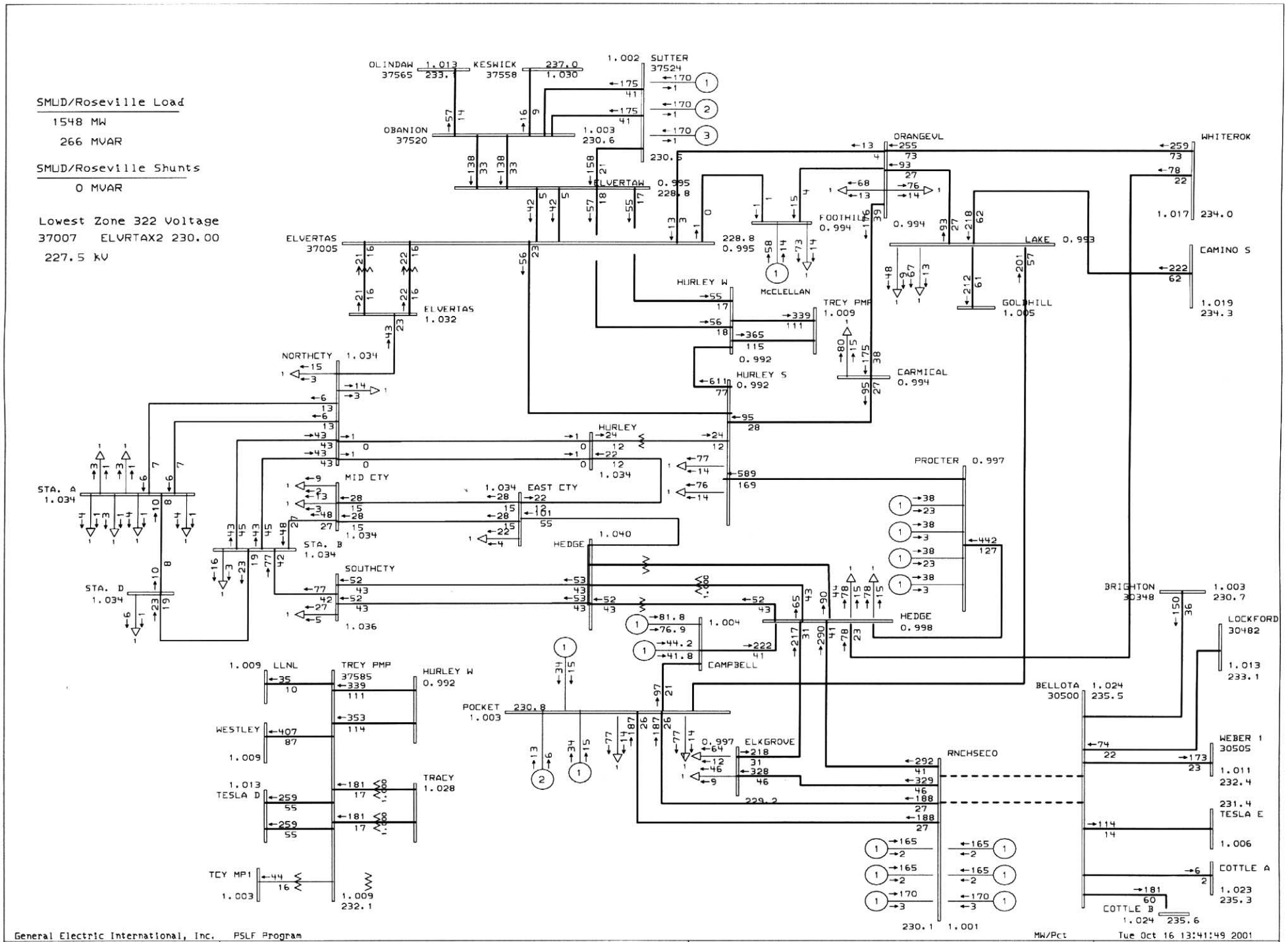
SMUD/Roseville Load
1548 MW
266 MVAR
SMUD/Roseville Shunts
0 MVAR
Lowest Zone 322 Voltage
37007 ELVRTAX2 230.00
227.5 kV
OLINDAW 37565 1.013 233.1
KESWICK 37558 237.0 1.030
SUTTER 37524 1.002
OBANION 37520 1.003 230.6
ELVERTAW 0.995 228.8
ORANGEVL
WHITEROK
FOOTHILL 0.994
LAKE 0.993
CAMINO S
McCLELLAN
GOLDHILL 1.005
ELVERTAS 37005
ELVERTAS 1.032
HURLEY W
TRCY PMP 1.009
NORTHCTY 1.034
HURLEY S 0.992
CARMICAL 0.994
HURLEY
PROCTER 0.997
STA. A 1.034
MID CTY
EAST CTY
STA. B 1.034
HEDGE 1.040
STA. D 1.034
SOUTHCTY
HEDGE 0.998
BRIGHTON 30348 1.003 230.7
LOCKFORD 30482 1.013 233.1
CAMPBELL 1.004
LLNL 1.009
TRCY PMP 37585
HURLEY W 0.992
BELLOTA 30500 1.024 235.5
POCKET 1.003 230.8
WESTLEY 1.009
ELKGROVE 0.997
RNCHSECO
WEBER 1 30505 1.011 232.4
TRACY 1.028
TESLA D 1.013
TESLA E 231.4 1.006
TCY MP1 1.003
COTTLE A 1.023 235.3
COTTLE B 1.024 235.6
General Electric International, Inc.
PSLF Program
MW/Pct
Tue Oct 16 13:41:49 2001
SMUD
rs04sp10, 2004 Spring Rancho Seco Generation Base Case
1000 MW Rancho Seco Generation, No FPLE Generation Plant
From Western FPLE Study Case 04sp-fplesrev
RNCHSECO 230.00 -BELLOTA 230.00 #1
RNCHSECO 230.00 -BELLOTA 230.00 #2
sac-gb2.drw
t.wrk
Rating = 2

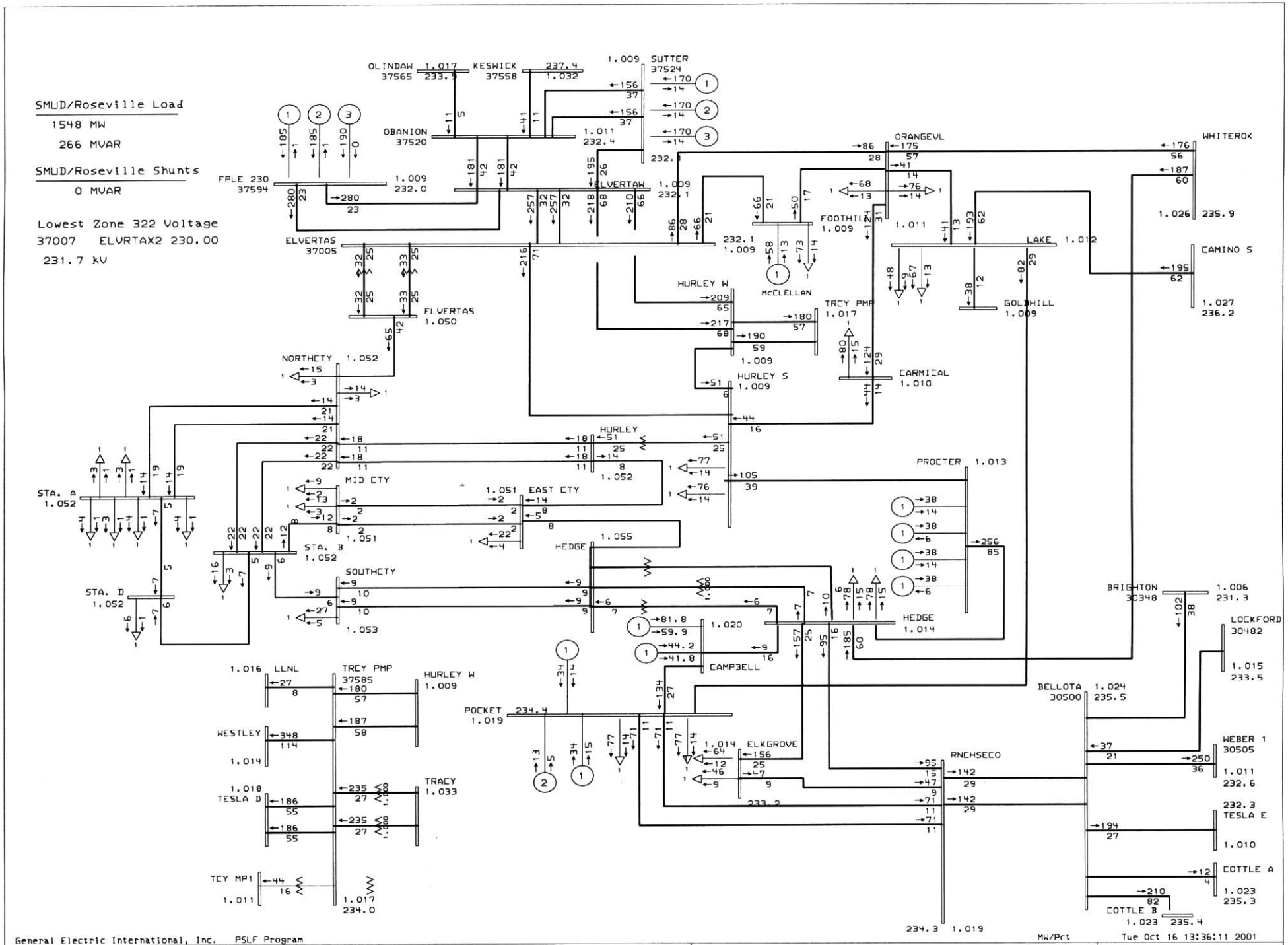
SMUD/Roseville Load
1548 MW
266 MVAR
SMUD/Roseville Shunts
0 MVAR
Lowest Zone 322 Voltage
37007 ELVRTAX2 230.00
231.7 kV
OLINDAW 37565 1.017 233.9
KESWICK 37558 237.4 1.032
1.009 SUTTER 37524
OBANION 37520
1.011 232.4
FPLE 230 37594 1.009 232.0
ELVERTAW 1.009 232.1
ORANGEVL
WHITEROK
1.026 235.9
FOOTHILL 1.009
1.011
LAKE 1.012
CAMINO S
1.027 236.2
GOLDHILL 1.009
ELVERTAS 37005
ELVERTAS 1.050
McCLELLAN
HURLEY W
TRCY PMP 1.017
HURLEY S 1.009
CARMICAL 1.010
NORTHCTY 1.052
HURLEY
1.052
PROCTER 1.013
STA. A 1.052
MID CTY
1.051 EAST CTY
STA. B 1.052
HEDGE 1.055
STA. D 1.052
SOUTHCTY
1.053
1.020
HEDGE 1.014
BRIGHTON 30348 1.006 231.3
LOCKFORD 30482
1.015 233.5
CAMPBELL
1.016 LLNL
TRCY PMP 37585
HURLEY W 1.009
POCKET 1.019 234.4
BELLOTA 30500 1.024 235.5
WESTLEY 1.014
1.014 ELKGROVE
RNCHSECO
WEBER 1 30505
1.011 232.6
1.018 TESLA D
TRACY 1.033
232.3 TESLA E
1.010
TCY MP1 1.011
1.017 234.0
COTTLE A
1.023 235.3
COTTLE B 1.023 235.4
234.3 1.019
MW/Pct
Tue Oct 16 13:36:11 2001
General Electric International, Inc. PSLF Program
SMUD
rs04sp01, 2004 Spring Rancho Seco Generation Base Case
No Rancho Seco Generation Plant, FPLE Generation at 560 MW
From Western FPLE Study Case 04sp-fplesrev
BASE CASE
sac-gb2.drw
t.wrk
Rating = 1

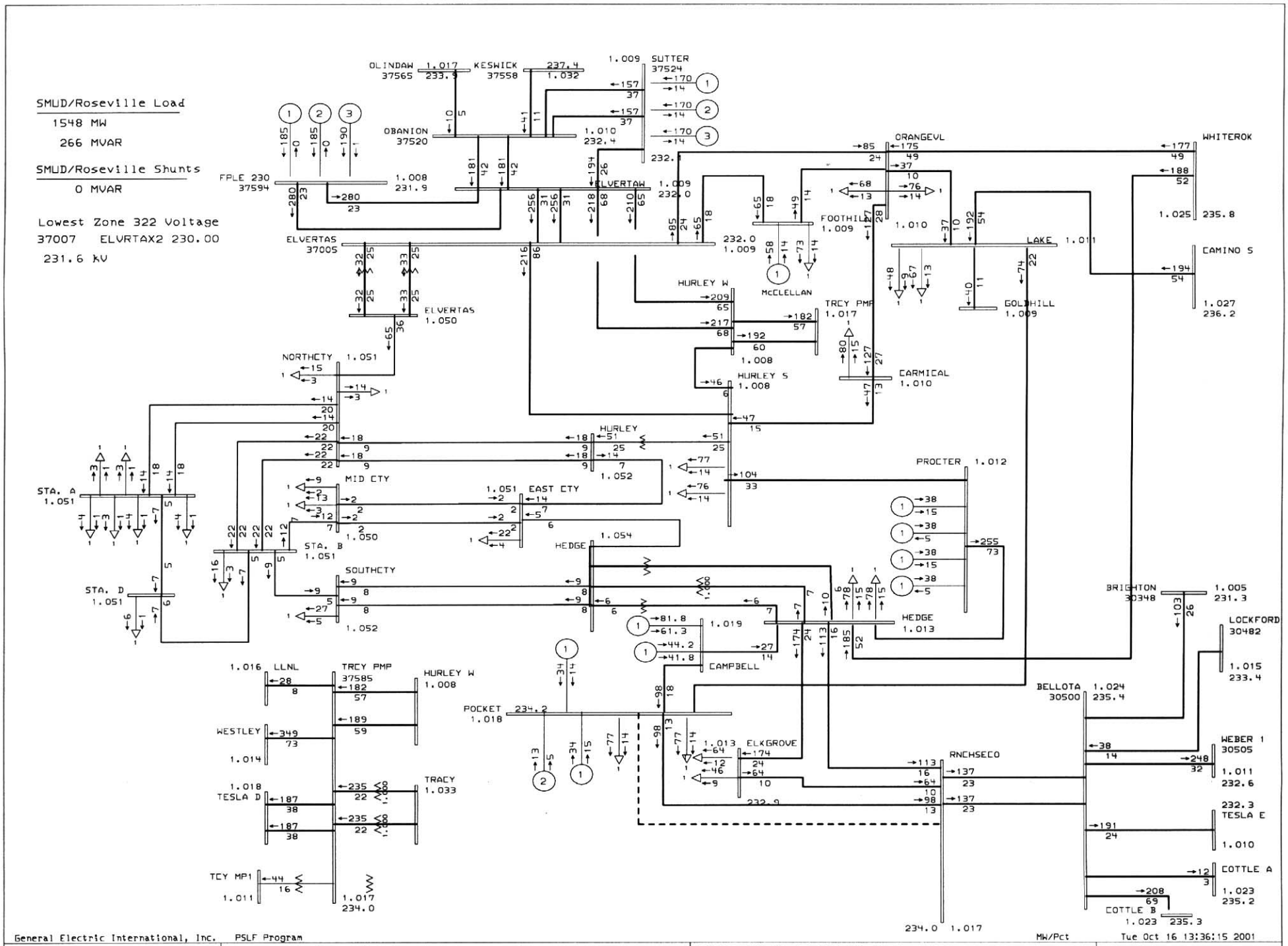
SMUD/Roseville Load
1548 MW
266 MVAR
SMUD/Roseville Shunts
0 MVAR
Lowest Zone 322 Voltage
37007 ELVRTAX2 230.00
231.6 kV
OLINDAW 37565
KESWICK 37558
SUTTER 37524
OBANION 37520
FPLE 230 37594
ELVERTAW
ELVERTAS 37005
ELVERTAS 1.050
ORANGEVL
WHITEROK
FOOTHILL 1.009
LAKE
CAMINO S
McCLELLAN
HURLEY W
TRCY PMP 1.017
GOLDHILL 1.009
HURLEY S 1.008
CARMICAL 1.010
NORTHCTY 1.051
HURLEY
PROCTER 1.012
STA. A 1.051
MID CTY
EAST CTY
STA. B 1.051
HEDGE
STA. D 1.051
SOUTHCTY
HEDGE 1.013
BRIGHTON 30348
LOCKFORD 30482
CAMPBELL
LLNL
TRCY PMP 37585
HURLEY W 1.008
POCKET 1.018
BELLOTA 30500
WESTLEY
ELKGROVE
RNCHSECO
WEBER 1 30505
TRACY 1.033
TESLA D
TESLA E
TCY MP1
COTTLE A
COTTLE B
General Electric International, Inc.
PSLF Program
MW/Pct
Tue Oct 16 13:36:15 2001
SMUD
rs04sp01, 2004 Spring Rancho Seco Generation Base Case
No Rancho Seco Generation Plant, FPLE Generation at 560 MW
From Western FPLE Study Case 04sp-fplesrev
POCKET 230.00 -RNCHSECO 230.00 #2
sac-gb2.drw
t.wrk
Rating = 2

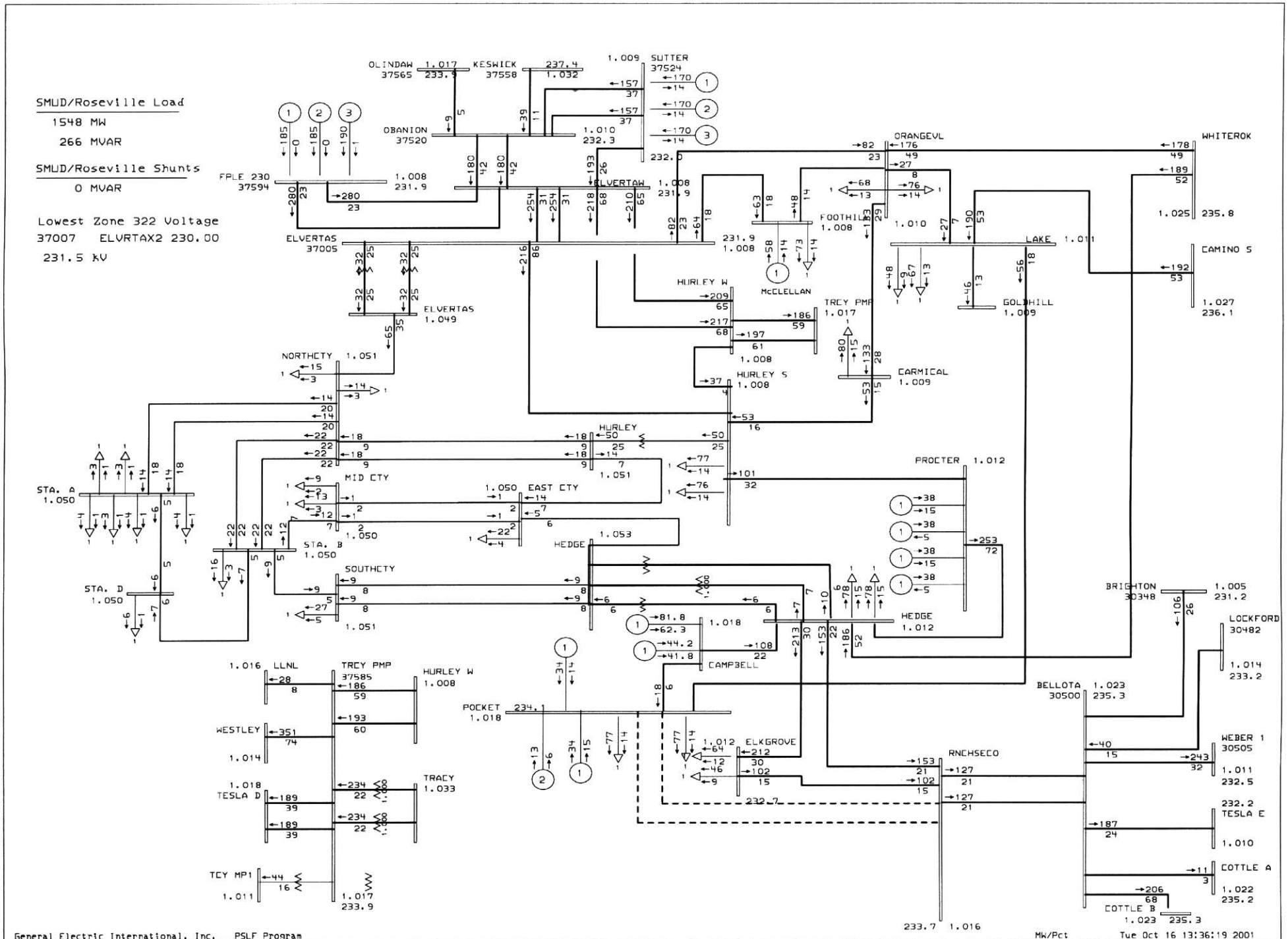
SMUD/Roseville Load
1548 MW
266 MVAR
SMUD/Roseville Shunts
0 MVAR
Lowest Zone 322 Voltage
37007 ELVRTAX2 230.00
231.5 kV
OLINDAW 1.017 233.9
KESWICK 37558 237.4 1.032
1.009 SUTTER 37524
OBANION 37520
1.010 232.3
FPLE 230 37594 1.008 231.9
ELVERTAW 1.008 231.9
ORANGEVL 232.0
WHITEROK 1.025 235.8
FOOTHILL 1.008
1.010
LAKE 1.011
CAMINO S 1.027 236.1
ELVERTAS 37005 231.9 1.008
ELVERTAS 1.049
McCLELLAN
HURLEY W
TRCY PMP 1.017
GOLDHILL 1.009
NORTHCTY 1.051
HURLEY S 1.008
CARMICAL 1.009
HURLEY 1.051
PROCTER 1.012
STA. A 1.050
MID CTY 1.050
EAST CTY 1.050
STA. B 1.050
HEDGE 1.053
SOUTHCTY 1.051
STA. D 1.050
BRIGHTON 30348 1.005 231.2
HEDGE 1.012
LOCKFORD 30482 1.014 233.2
1.018
CAMPBELL
1.016 LLNL
TRCY PMP 37585
HURLEY W 1.008
BELLOTA 30500 1.023 235.3
POCKET 1.018 234.1
WESTLEY 1.014
1.012 ELKGROVE
RNCHSECO
WEBER 1 30505 1.011 232.5
1.018 TESLA D
TRACY 1.033
232.2 TESLA E 1.010
TCY MP1 1.011
1.017 233.9
COTTLE A 1.022 235.2
COTTLE B 1.023 235.3
233.7 1.016
General Electric International, Inc. PSLF Program
MW/Pct
Tue Oct 16 13:36:19 2001
SMUD
rs04sp01, 2004 Spring Rancho Seco Generation Base Case
No Rancho Seco Generation Plant, FPLE Generation at 560 MW
From Western FPLE Study Case 04sp-fplesrev
POCKET 230.00 -RNCHSECO 230.00 #1
POCKET 230.00 -RNCHSECO 230.00 #2
sac-gb2.drw
t.wrk
Rating = 2

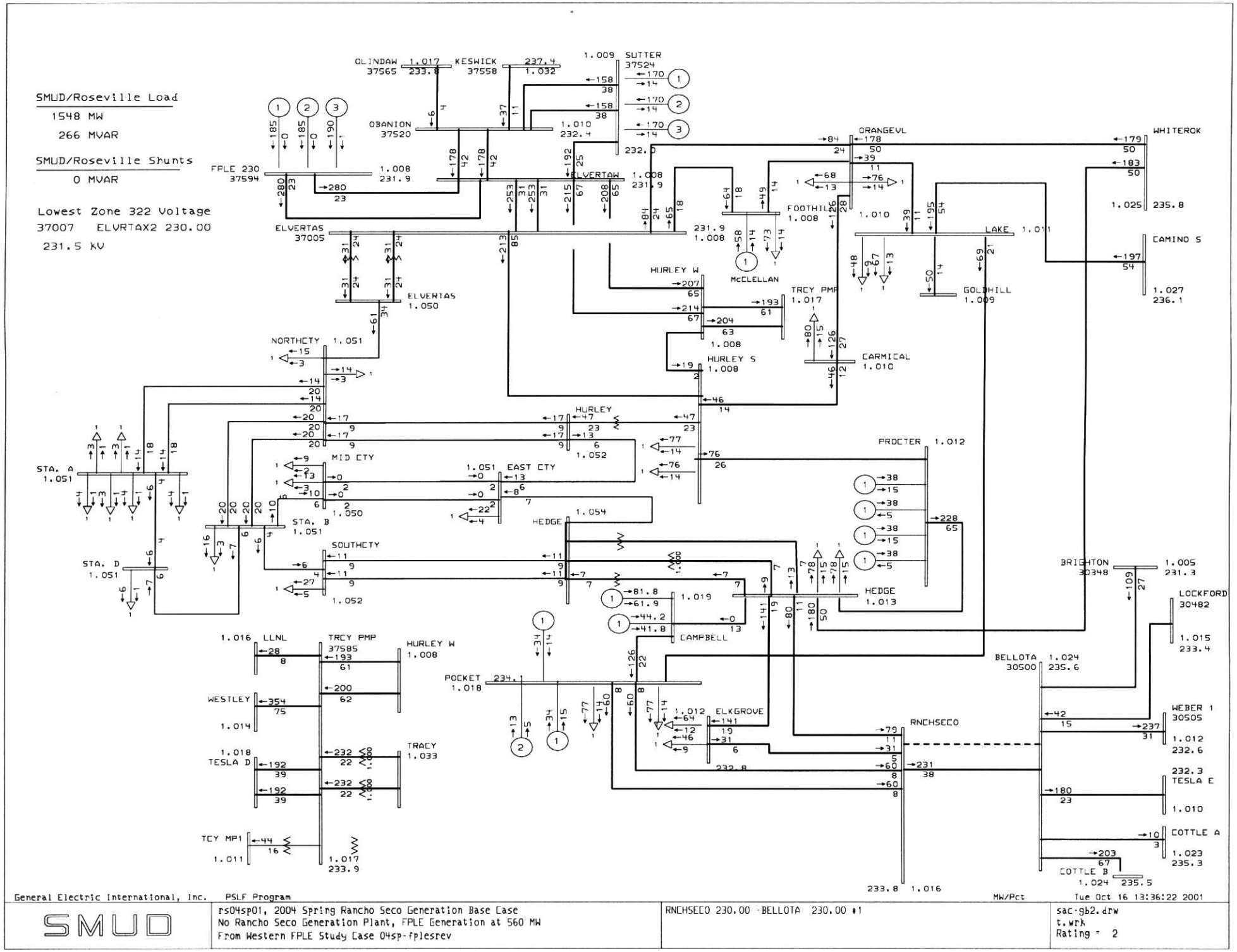
SMUD/Roseville Load
1548 MW
266 MVAR
SMUD/Roseville Shunts
0 MVAR
Lowest Zone 322 Voltage
37007 ELVRTAX2 230.00
231.5 kV
OLINDAW 1.017 233.8
37565
KESWICK 237.4 1.032
37558
1.009 SUTTER
37524
OBANION
37520
1.010 232.4
FPLE 230
37594
1.008 231.9
ELVERTAW
ELVERTAS
37005
ELVERTAS
1.050
NORTHCTY 1.051
HURLEY W
HURLEY S
1.008
McCLELLAN
TRCY PMP
1.017
FOOTHILL
1.008
1.010
ORANGEVL
WHITEROK
1.025 235.8
LAKE 1.011
CAMINO S
1.027
236.1
GOLDHILL
1.009
CARMICAL
1.010
HURLEY
1.052
PROCTER 1.012
STA. A
1.051
MID CTY
1.051 EAST CTY
STA. B
1.051
1.050
HEDGE
1.054
SOUTHCTY
1.052
STA. D
1.051
1.019
HEDGE
1.013
BRIGHTON
30348
1.005
231.3
LOCKFORD
30482
1.015
233.4
CAMPBELL
1.016 LLNL
TRCY PMP
37585
HURLEY W
1.008
WESTLEY
1.014
TESLA D
1.018
TRACY
1.033
TCY MP1
1.011
1.017
233.9
POCKET
1.018
234.
1.012 ELKGROVE
232.8
RNCHSECO
233.8 1.016
BELLOTA
30500
1.024
235.6
WEBER 1
30505
1.012
232.6
232.3
TESLA E
1.010
COTTLE A
1.023
235.3
COTTLE B
1.024 235.5
General Electric International, Inc. PSLF Program
MW/Pct
Tue Oct 16 13:36:22 2001
SMUD
rs04sp01, 2004 Spring Rancho Seco Generation Base Case
No Rancho Seco Generation Plant, FPLE Generation at 560 MW
From Western FPLE Study Case 04sp-fplesrev
RNCHSECO 230.00 -BELLOTA 230.00 #1
sac-gb2.drw
t.wrk
Rating - 2

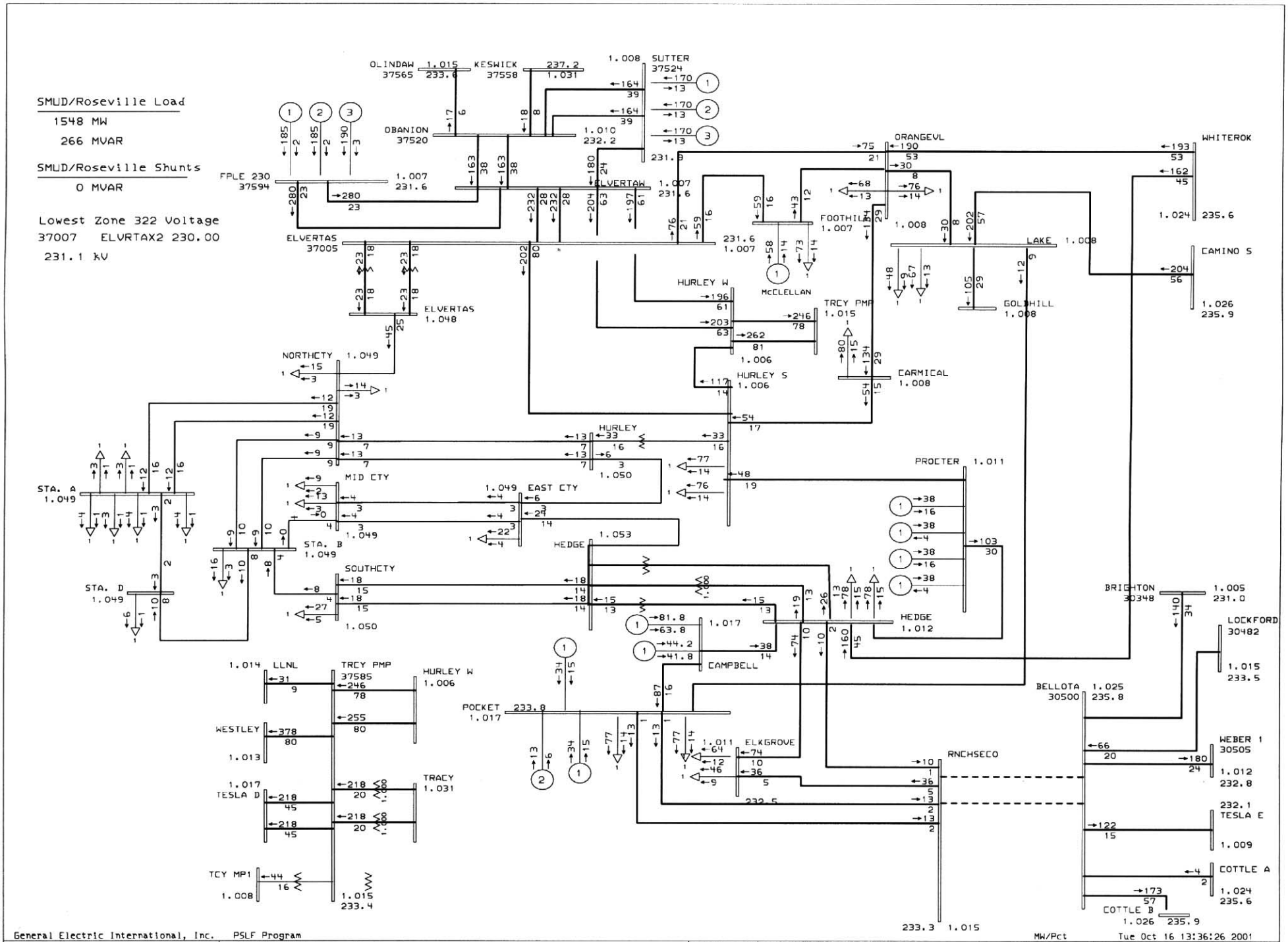
SMUD/Roseville Load
1548 MW
266 MVAR
SMUD/Roseville Shunts
0 MVAR
Lowest Zone 322 Voltage
37007 ELVRTAX2 230.00
231.1 kV
OLINDAW 1.015 233.6 37565
KESWICK 237.2 1.031 37558
SUTTER 1.008 37524
OBANION 37520
1.010 232.2
FPLE 230 37594
1.007 231.6
ELVERTAW
ELVERTAS 37005
ELVERTAS 1.048
ORANGEVL
WHITEROK
1.024 235.6
FOOTHILL 1.007
LAKE 1.008
CAMINO S
1.026 235.9
McCLELLAN
HURLEY W
TRCY PMP 1.015
GOLDHILL 1.008
CARMICAL 1.008
HURLEY S 1.006
NORTHCTY 1.049
HURLEY 1.050
PROCTER 1.011
STA. A 1.049
MID CTY
EAST CTY 1.049
STA. B 1.049
HEDGE 1.053
SOUTHCTY 1.050
STA. D 1.049
HEDGE 1.012
BRIGHTON 30348
1.005 231.0
LOCKFORD 30482
1.015 233.5
1.017
CAMPBELL
1.014 LLNL
TRCY PMP 37585
HURLEY W 1.006
BELLOTA 1.025 235.8 30500
POCKET 233.8 1.017
WESTLEY 1.013
1.011 ELKGROVE
RNCHSECO
WEBER 1 30505
1.012 232.8
1.017 TESLA D
TRACY 1.031
232.1 TESLA E
1.009
TCY MP1 1.008
1.015 233.4
COTTLE A
1.024 235.6
COTTLE B 1.026 235.9
233.3 1.015
General Electric International, Inc. PSLF Program
MW/Pct
Tue Oct 16 13:36:26 2001
SMUD
rs04sp01, 2004 Spring Rancho Seco Generation Base Case
No Rancho Seco Generation Plant, FPLE Generation at 560 MW
From Western FPLE Study Case 04sp-fplesrev
RNCHSECO 230.00 -BELLOTA 230.00 #1
RNCHSECO 230.00 -BELLOTA 230.00 #2
sac-gb2.drw
t.wrk
Rating = 2

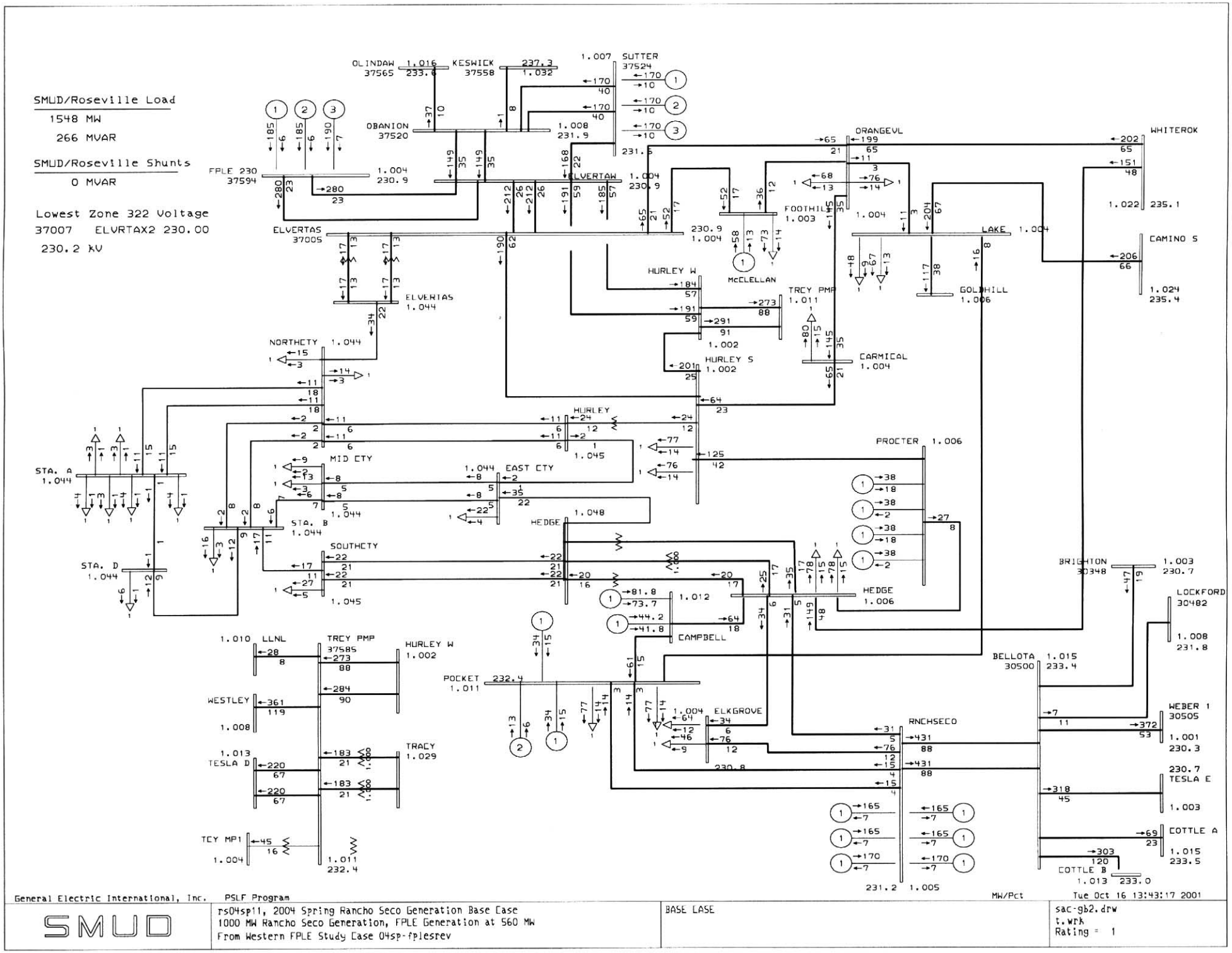
SMUD/Roseville Load
1548 MW
266 MVAR
SMUD/Roseville Shunts
0 MVAR
Lowest Zone 322 Voltage
37007 ELVRTAX2 230.00
230.2 kV
OLINDAW 1.016 233.6
37565
KESWICK 237.3
37558 1.032
1.007 SUTTER
37524
OBANION
37520
1.008
231.9
FPLE 230
37594
1.004
230.9
ELVERTAW 1.004
230.9
231.6
ORANGEVL
199
WHITEROK
202
65
151
48
1.022 235.1
FOOTHILL
1.003
1.004
LAKE 1.004
CAMINO S
206
66
1.024
235.4
ELVERTAS
37005
230.9
1.004
McCLELLAN
HURLEY W
TRCY PMP
1.011
GOLDHILL
1.006
ELVERTAS
1.044
NORTHCTY 1.044
HURLEY S
1.002
CARMICAL
1.004
HURLEY
1.045
PROCTER 1.006
STA. A
1.044
MID CTY
EAST CTY
1.044
STA. B
1.044
HEDGE 1.048
SOUTHCTY
1.045
STA. D
1.044
HEDGE
1.006
BRIGHTON
30348
1.003
230.7
LOCKFORD
30482
1.008
231.8
1.012
CAMPBELL
1.010 LLNL
TRCY PMP
37585
HURLEY W
1.002
BELLOTA 1.015
30500
233.4
POCKET 232.4
1.011
WESTLEY
1.008
ELKGROVE
1.004
RNCHSECO
WEBER 1
30505
1.001
230.3
TRACY
1.029
1.013
TESLA D
230.8
230.7
TESLA E
1.003
TCY MP1
1.004
1.011
232.4
COTTLE A
1.015
233.5
COTTLE B
1.013 233.0
231.2 1.005
MW/Pct
Tue Oct 16 13:43:17 2001
General Electric International, Inc. PSLF Program
SMUD
rs04sp11, 2004 Spring Rancho Seco Generation Base Case
1000 MW Rancho Seco Generation, FPLE Generation at 560 MW
From Western FPLE Study Case 04sp-fplesrev
BASE CASE
sac-gb2.drw
t.wrk
Rating = 1

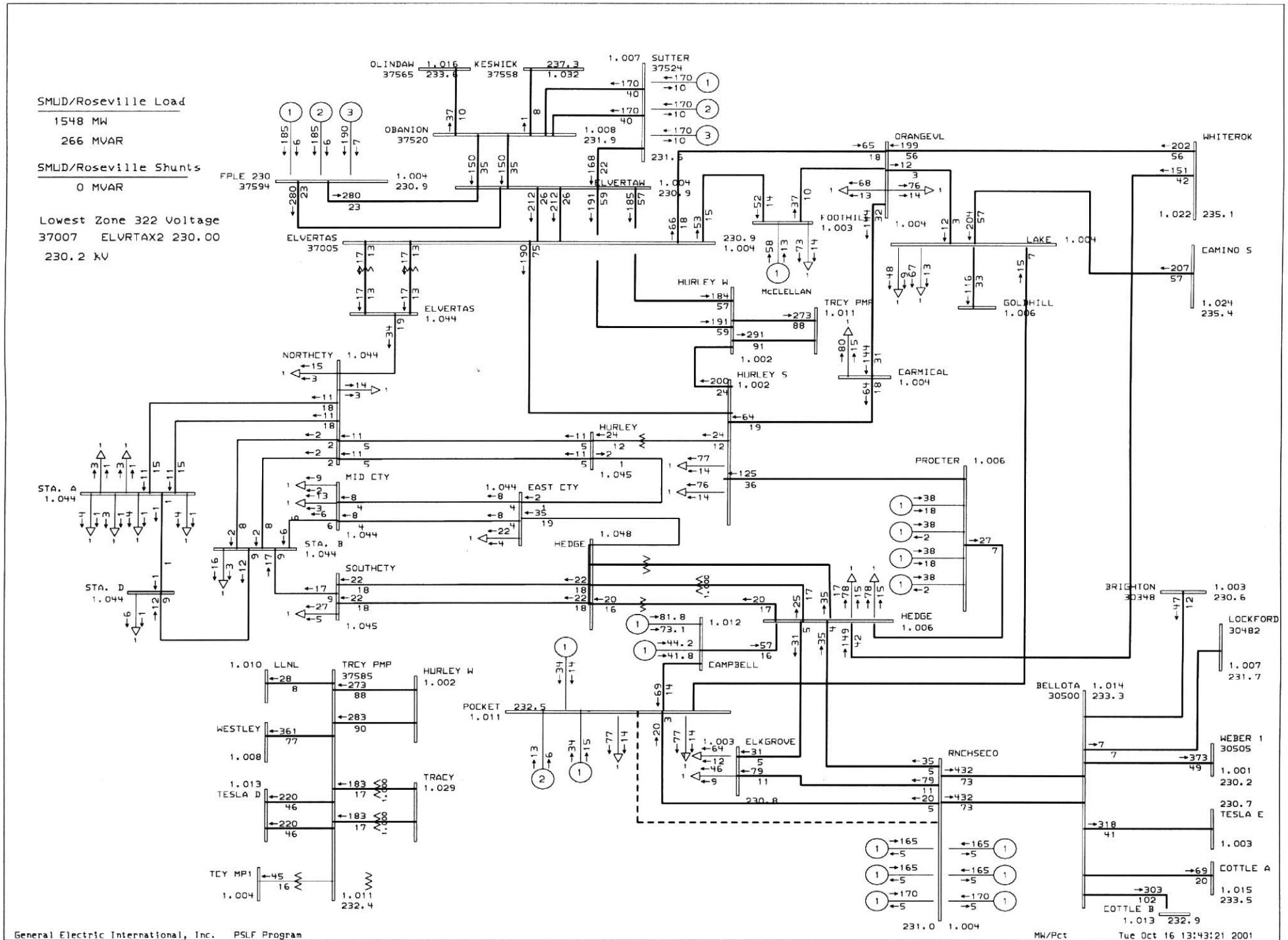
SMUD/Roseville Load
1548 MW
266 MVAR
SMUD/Roseville Shunts
0 MVAR
Lowest Zone 322 Voltage
37007 ELVRTAX2 230.00
230.2 kV
OLINDAW 1.016 233.6 37565
KESWICK 237.3 1.032 37558
1.007 SUTTER 37524
OBANION 37520
1.008 231.9
FPLE 230 37594
1.004 230.9
ELVERTAW 1.004 230.9
ELVERTAS 37005
230.9 1.004
ELVERTAS 1.044
ORANGEVL
WHITEROK
1.022 235.1
FOOTHILL 1.003
LAKE 1.004
CAMINO S
1.024 235.4
GOLDHILL 1.006
McCLELLAN
HURLEY W
TRCY PMP 1.011
CARMICAL 1.004
HURLEY S 1.002
NORTHCTY 1.044
HURLEY
1.045
PROCTER 1.006
STA. A 1.044
MID CTY
1.044 EAST CTY
STA. B 1.044
HEDGE 1.048
SOUTHCTY
1.045
STA. D 1.044
HEDGE 1.006
BRIGHTON 30348
1.003 230.6
LOCKFORD 30482
1.007 231.7
1.012
CAMPBELL
1.010 LLNL
TRCY PMP 37585
HURLEY W 1.002
POCKET 232.5 1.011
BELLOTA 30500 1.014 233.3
WESTLEY 1.008
ELKGROVE
RNCHSECO
WEBER 1 30505
1.001 230.2
1.013 TESLA D
TRACY 1.029
230.8
230.7 TESLA E
1.003
TCY MP1 1.004
1.011 232.4
COTTLE A
1.015 233.5
COTTLE B 1.013 232.9
231.0 1.004
General Electric International, Inc. PSLF Program
MW/Pct
Tue Oct 16 13:43:21 2001
SMUD
rs04sp11, 2004 Spring Rancho Seco Generation Base Case
1000 MW Rancho Seco Generation, FPLE Generation at 560 MW
From Western FPLE Study Case 04sp-fplesrev
POCKET 230.00 -RNCHSECO 230.00 #2
sac-gb2.drw
t.wrk
Rating = 2

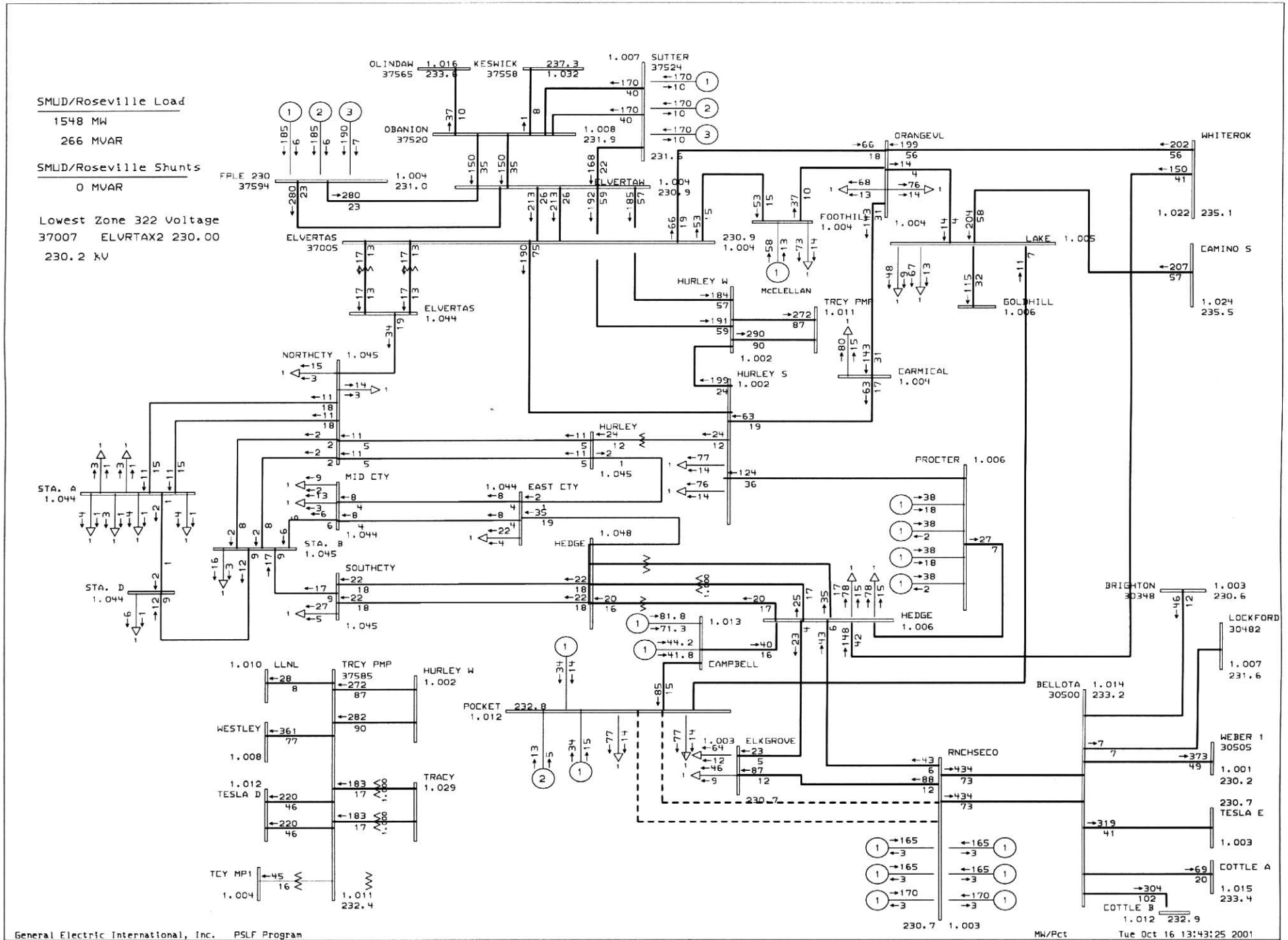
SMUD/Roseville Load
1548 MW
266 MVAR
SMUD/Roseville Shunts
0 MVAR
Lowest Zone 322 Voltage
37007 ELVRTAX2 230.00
230.2 kV
OLINDAW 1.016 233.6 37565
KESWICK 237.3 1.032 37558
1.007 SUTTER 37524
OBANION 37520
1.008 231.9
FPLE 230 37594
1.004 231.0
ELVERTAW 1.004 230.9
ELVERTAS 37005
ELVERTAS 1.044
NORTHCTY 1.045
HURLEY W
McCLELLAN
TRCY PMP 1.011
FOOTHILL 1.004
ORANGEVL
WHITEROK
1.022 235.1
CAMINO S
1.024 235.5
LAKE 1.005
GOLDHILL 1.006
CARMICAL 1.004
HURLEY S 1.002
HURLEY
PROCTER 1.006
STA. A 1.044
MID CTY
EAST CTY
STA. B 1.045
HEDGE 1.048
STA. D 1.044
SOUTHCTY
HEDGE 1.006
BRIGHTON 30348
1.003 230.6
LOCKFORD 30482
1.007 231.6
CAMPBELL
LLNL
TRCY PMP 37585
HURLEY W 1.002
POCKET 232.8 1.012
WESTLEY
1.008
TRACY 1.029
TESLA D
TCY MP1
1.004
1.011 232.4
ELKGROVE
RNCHSECO
BELLOTA 30500 1.014 233.2
WEBER 1 30505
1.001 230.2
230.7 TESLA E
1.003
COTTLE A
1.015 233.4
COTTLE B 1.012 232.9
230.7 1.003
General Electric International, Inc. PSLF Program
MW/Pct
Tue Oct 16 13:43:25 2001
SMUD
rs04sp11, 2004 Spring Rancho Seco Generation Base Case
1000 MW Rancho Seco Generation, FPLE Generation at 560 MW
From Western FPLE Study Case 04sp-fplesrev
POCKET 230.00 -RNCHSECO 230.00 #1
POCKET 230.00 -RNCHSECO 230.00 #2
sac-gb2.drw
t.wrk
Rating = 2

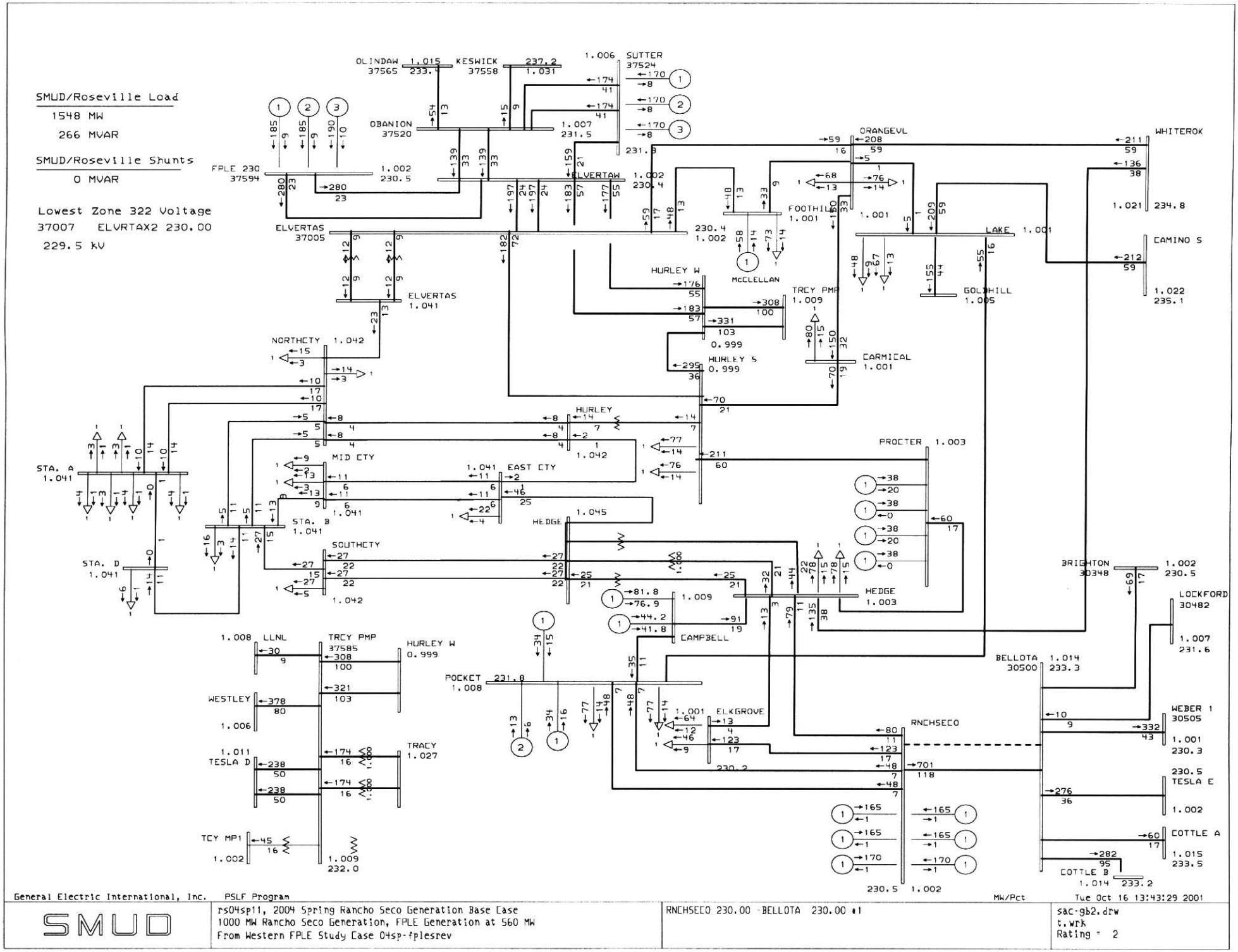
SMUD/Roseville Load
1548 MW
266 MVAR
SMUD/Roseville Shunts
0 MVAR
Lowest Zone 322 Voltage
37007 ELVRTAX2 230.00
229.5 kV
OLINDAW 37565
KESWICK 37558
SUTTER 37524
OBANION 37520
FPLE 230 37594
ELVERTAW
ELVERTAS 37005
ELVERTAS 1.041
ORANGEVL
WHITEROK
FOOTHILL 1.001
LAKE 1.001
CAMINO S
McCLELLAN
HURLEY W
TRCY PMP 1.009
GOLDHILL 1.005
CARMICAL 1.001
HURLEY S 0.999
NORTHCTY 1.042
HURLEY
PROCTER 1.003
STA. A 1.041
MID CTY
EAST CTY
STA. B 1.041
HEDGE 1.045
STA. D 1.041
SOUTHCTY 1.042
HEDGE 1.003
BRIGHTON 30348
LOCKFORD 30482
CAMPBELL
LLNL
TRCY PMP 37585
HURLEY W 0.999
WESTLEY
TESLA D
TRACY 1.027
TCY MP1
POCKET 1.008
ELKGROVE
RNCHSECO
BELLOTA 30500
WEBER 1 30505
TESLA E
COTTLE A
COTTLE B
General Electric International, Inc. PSLF Program
MW/Pct
Tue Oct 16 13:43:29 2001
SMUD
rs04sp11, 2004 Spring Rancho Seco Generation Base Case
1000 MW Rancho Seco Generation, FPLE Generation at 560 MW
From Western FPLE Study Case 04sp-fplesrev
RNCHSECO 230.00 -BELLOTA 230.00 #1
sac-gb2.drw
t.wrk
Rating = 2

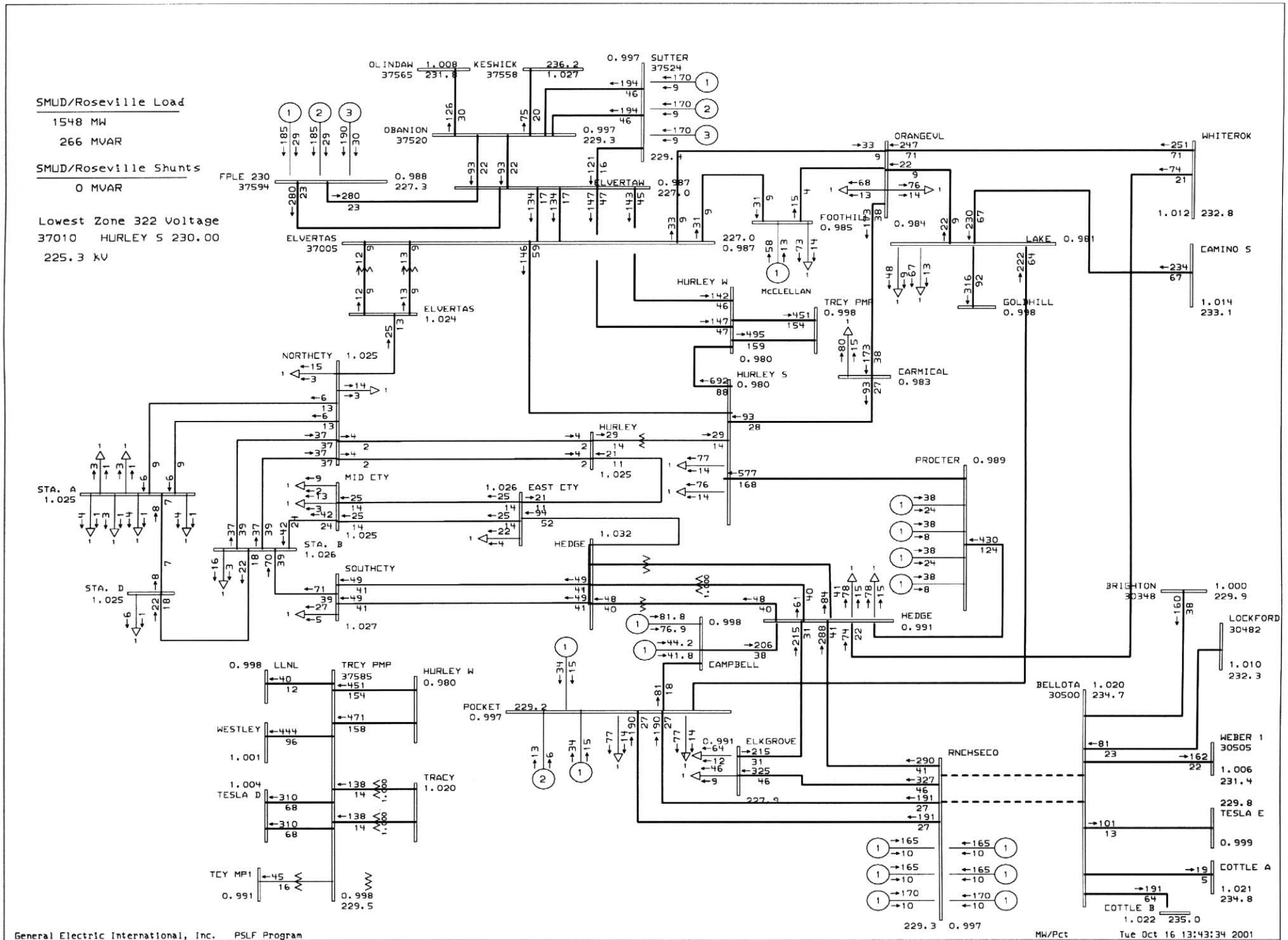
SMUD/Roseville Load
1548 MW
266 MVAR
SMUD/Roseville Shunts
0 MVAR
Lowest Zone 322 Voltage
37010 HURLEY S 230.00
225.3 kV
OLINDAW 1.008 231.8
37565
KESWICK 236.2 1.027
37558
0.997 SUTTER
37524
OBANION
37520
0.997 229.3
229.4
FPLE 230
37594
0.988 227.3
ELVERTAW 0.987 227.0
ELVERTAS
37005
227.0 0.987
ORANGEVL
WHITEROK
1.012 232.8
FOOTHILL 0.985
0.984
LAKE 0.981
CAMINO S
1.014 233.1
HURLEY W
McCLELLAN
TRCY PMP 0.998
GOLDHILL 0.998
ELVERTAS 1.024
NORTHCTY 1.025
HURLEY S 0.980
CARMICAL 0.983
HURLEY
1.025
PROCTER 0.989
STA. A 1.025
MID CTY
1.026 EAST CTY
STA. B 1.026
HEDGE 1.032
SOUTHCTY
1.027
STA. D 1.025
BRIGHTON 30348
1.000 229.9
LOCKFORD 30482
1.010 232.3
HEDGE 0.991
0.998
CAMPBELL
BELLOTA 30500 1.020 234.7
0.998 LLNL
TRCY PMP 37585
HURLEY W 0.980
POCKET 229.2 0.997
WESTLEY
1.001
0.991 ELKGROVE
RNCHSECO
WEBER 1 30505
1.006 231.4
1.004 TESLA D
TRACY 1.020
229.8 TESLA E
0.999
TCY MP1
0.991
0.998 229.5
COTTLE A
1.021 234.8
COTTLE B 1.022 235.0
229.3 0.997
General Electric International, Inc. PSLF Program
MW/Pct
Tue Oct 16 13:43:34 2001
SMUD
rs04sp11, 2004 Spring Rancho Seco Generation Base Case
1000 MW Rancho Seco Generation, FPLE Generation at 560 MW
From Western FPLE Study Case 04sp-fplesrev
RNCHSECO 230.00 -BELLOTA 230.00 #1
RNCHSECO 230.00 -BELLOTA 230.00 #2
sac-gb2.drw
t.wrk
Rating = 2

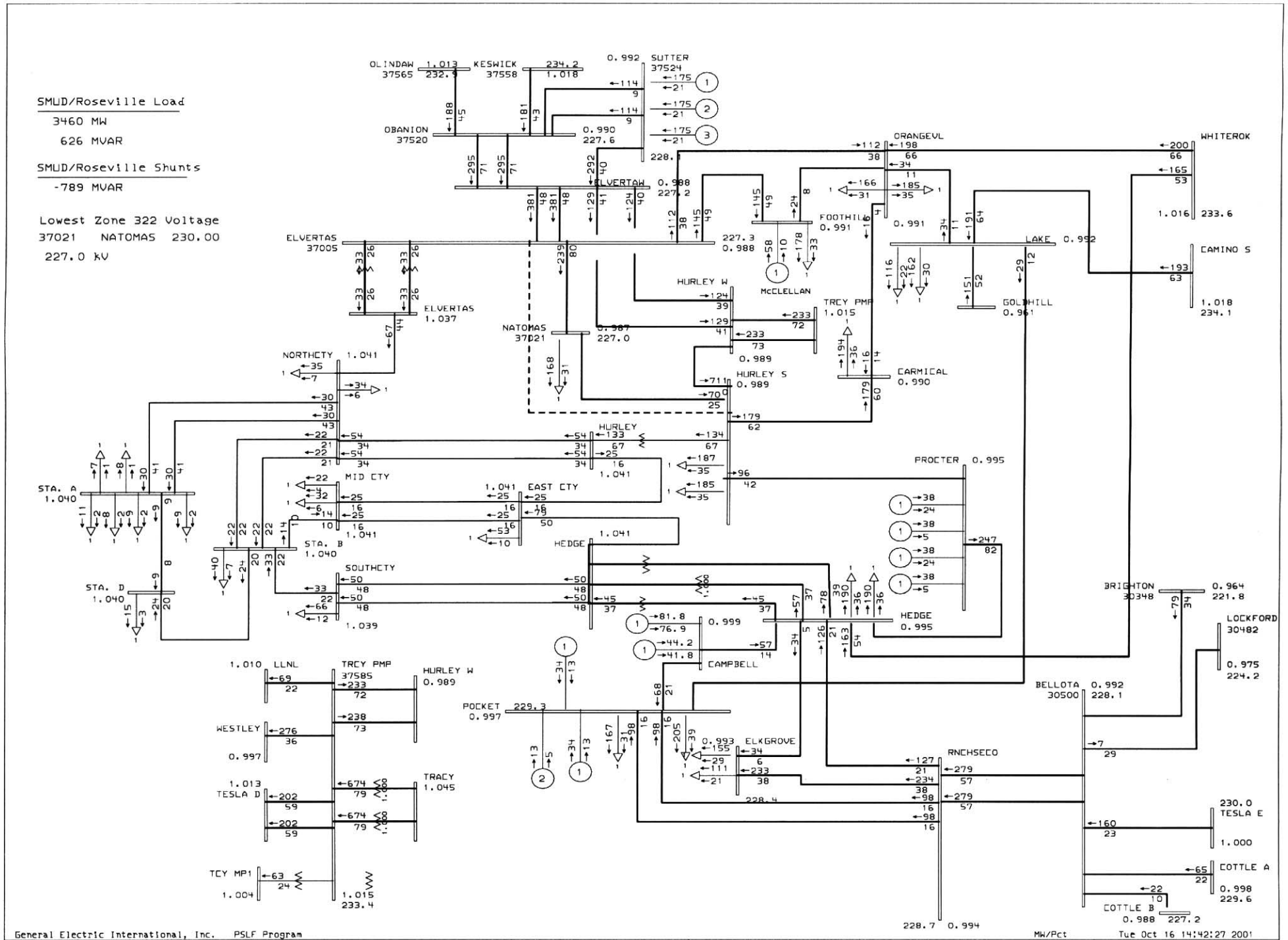
SMUD/Roseville Load
3460 MW
626 MVAR
SMUD/Roseville Shunts
-789 MVAR
Lowest Zone 322 Voltage
37021 NATOMAS 230.00
227.0 kV
OLINDAW 37565 1.013 232.9
KESWICK 37558 234.2 1.018
SUTTER 37524 0.992
OBANION 37520 0.990 227.6
ELVERTAW 0.988 227.2
ORANGEVL
WHITEROK
FOOTHILL 0.991
LAKE 0.992
CAMINO S
ELVERTAS 37005
ELVERTAS 1.037
HURLEY W
McCLELLAN
TRCY PMP 1.015
GOLDHILL 0.961
NATOMAS 37021 0.987 227.0
NORTHCTY 1.041
HURLEY S 0.989
CARMICAL 0.990
HURLEY
PROCTER 0.995
STA. A 1.040
MID CTY
EAST CTY
STA. B 1.040
HEDGE 1.041
SOUTHCTY
STA. D 1.040
HEDGE 0.995
BRIGHTON 30348 0.964 221.8
LOCKFORD 30482 0.975 224.2
CAMPBELL
LLNL 1.010
TRCY PMP 37585
HURLEY W 0.989
POCKET 0.997
BELLOTA 30500 0.992 228.1
WESTLEY 0.997
ELKGROVE
RNCHSECO
TESLA D 1.013
TRACY 1.045
TESLA E 230.0 1.000
TCY MP1 1.004
COTTLE A 0.998 229.6
COTTLE B 0.988 227.2
General Electric International, Inc. PSLF Program
MW/Pct
Tue Oct 16 14:42:27 2001
SMUD
rs05hs00, 2005 Heavy Summer Rancho Seco Generation Study Case
No Rancho Seco Generation Plant, No FPLE Generation Plant
From Western FPLE Study Case 05hs-no-fple
BASE CASE
sac-gb4.drw
t.wrk
Rating = 1

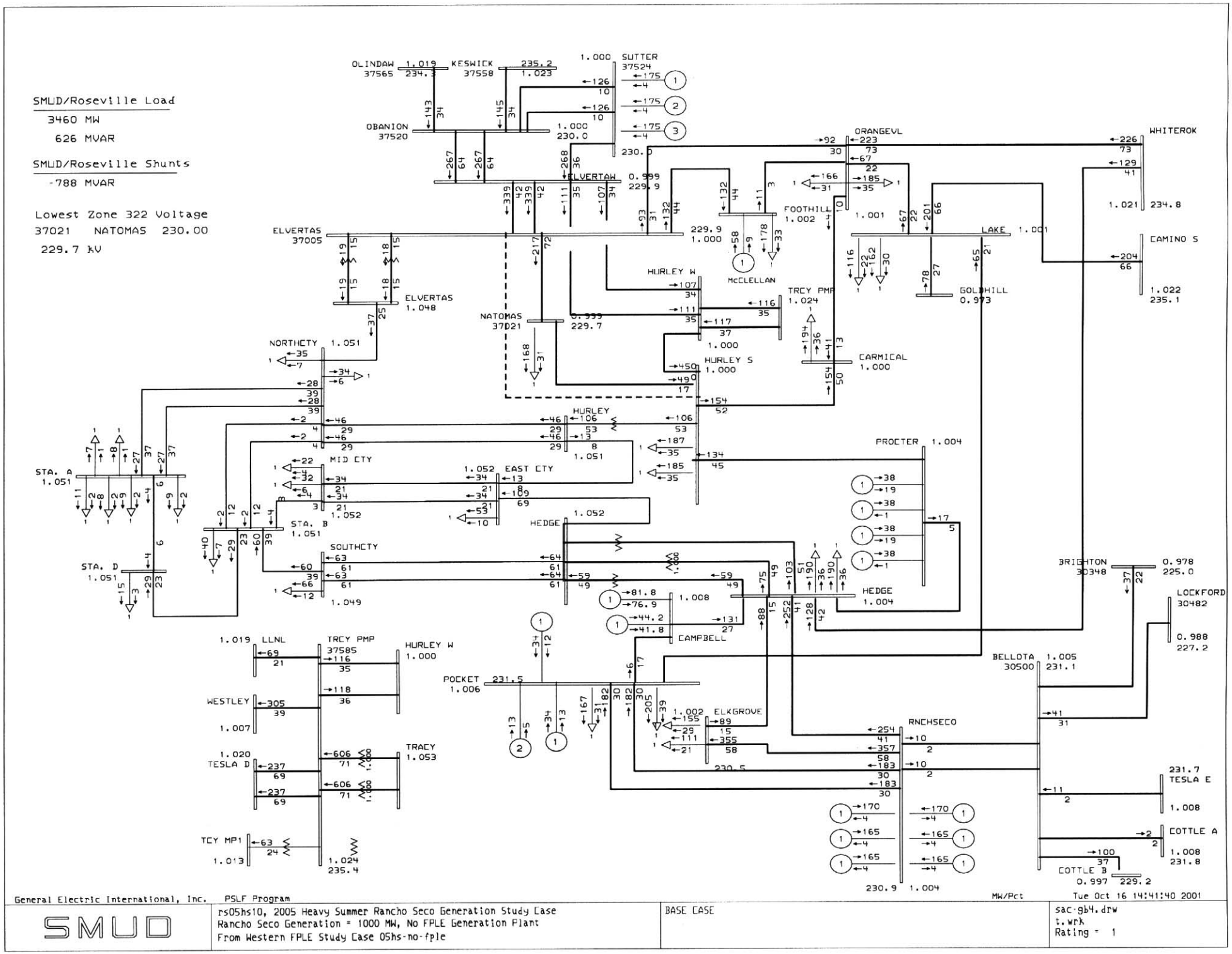
SMUD/Roseville Load
3460 MW
626 MVAR
SMUD/Roseville Shunts
-788 MVAR
Lowest Zone 322 Voltage
37021 NATOMAS 230.00
229.7 kV
OLINDAW 37565
KESWICK 37558
SUTTER 37524
OBANION 37520
ELVERTAW
ORANGEVL
WHITEROK
FOOTHILL
LAKE
CAMINO S
ELVERTAS 37005
ELVERTAS 1.048
McCLELLAN
HURLEY W
TRCY PMP 1.024
GOLDHILL 0.973
NATOMAS 37021
NORTHCTY
HURLEY S
CARMICAL
HURLEY
PROCTER 1.004
STA. A
MID CTY
EAST CTY
STA. B
HEDGE
STA. D
SOUTHCTY
BRIGHTON 30348
LOCKFORD 30482
CAMPBELL
LLNL
TRCY PMP 37585
HURLEY W
POCKET
ELKGROVE
RNCHSECO
BELLOTA 30500
WESTLEY
TRACY
TESLA D
TESLA E
COTTLE A
COTTLE B
TCY MP1
General Electric International, Inc. PSLF Program
MW/Pct
Tue Oct 16 14:41:40 2001
SMUD
rs05hs10, 2005 Heavy Summer Rancho Seco Generation Study Case
Rancho Seco Generation = 1000 MW, No FPLE Generation Plant
From Western FPLE Study Case 05hs-no-fple
BASE CASE
sac-gb4.drw
t.wrk
Rating = 1

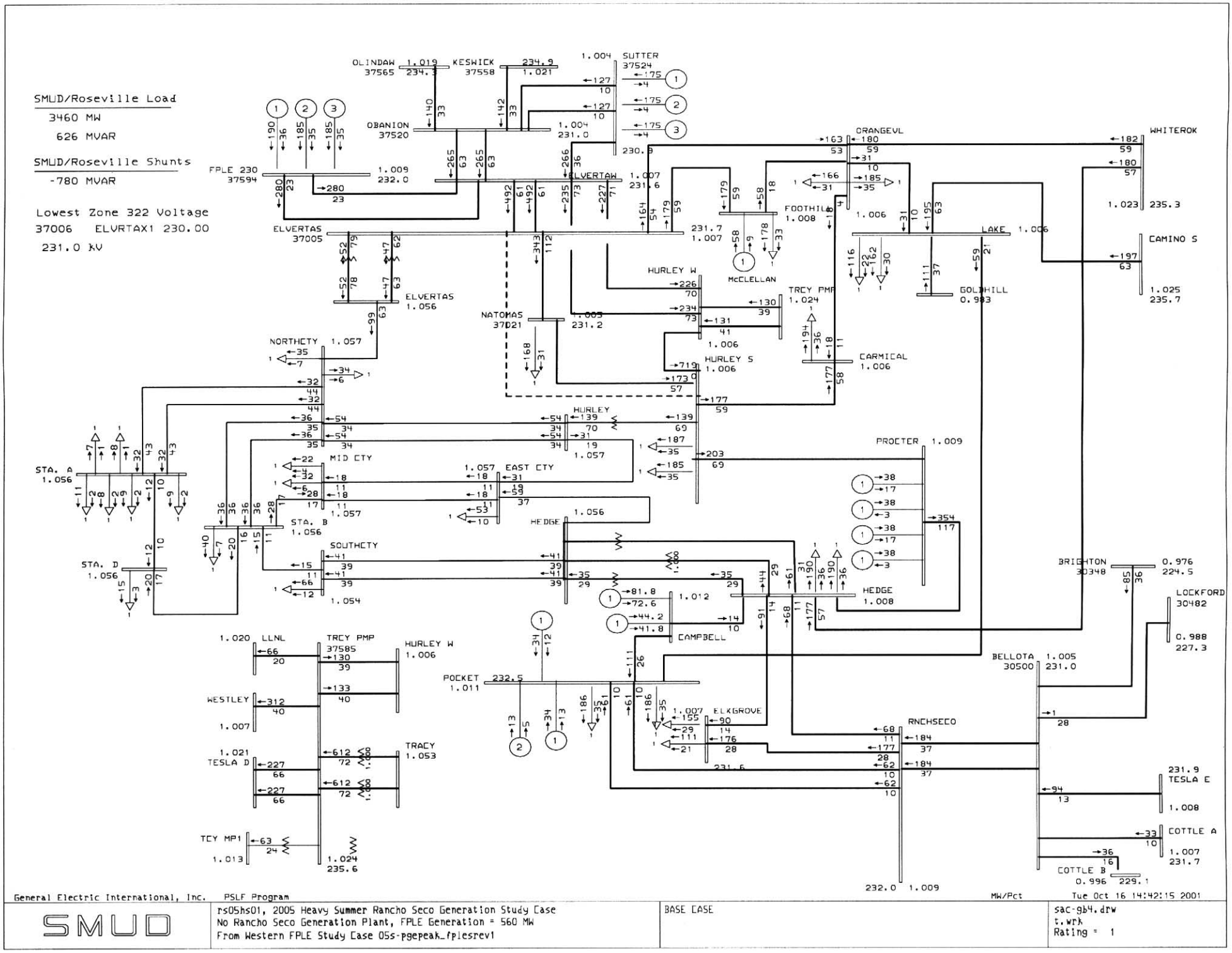
SMUD/Roseville Load
3460 MW
626 MVAR
SMUD/Roseville Shunts
-780 MVAR
Lowest Zone 322 Voltage
37006 ELVRTAX1 230.00
231.0 kV
OLINDAW 37565
KESWICK 37558
SUTTER 37524
OBANION 37520
FPLE 230 37594
ELVERTAW
ELVERTAS 37005
ELVERTAS 1.056
NATOMAS 37021
NORTHCTY
HURLEY W
HURLEY S
HURLEY
McCLELLAN
TRCY PMP 1.024
FOOTHILL 1.008
ORANGEVL
LAKE
GOLDHILL 0.983
WHITEROK
CAMINO S
CARMICAL 1.006
PROCTER 1.009
STA. A 1.056
STA. B 1.056
STA. D 1.056
MID CTY
EAST CTY
SOUTHCTY
HEDGE
HEDGE 1.008
CAMPBELL
BRIGHTON 30348
LOCKFORD 30482
BELLOTA 30500
RNCHSECO
ELKGROVE
POCKET 232.5
LLNL
TRCY PMP 37585
WESTLEY
TESLA D
TRACY 1.053
TCY MP1
TESLA E
COTTLE A
COTTLE B
General Electric International, Inc. PSLF Program
MW/Pct
Tue Oct 16 14:42:15 2001
SMUD
rs05hs01, 2005 Heavy Summer Rancho Seco Generation Study Case
No Rancho Seco Generation Plant, FPLE Generation = 560 MW
From Western FPLE Study Case 05s-pgepeak_fplesrev1
BASE CASE
sac-gb4.drw
t.wrk
Rating = 1

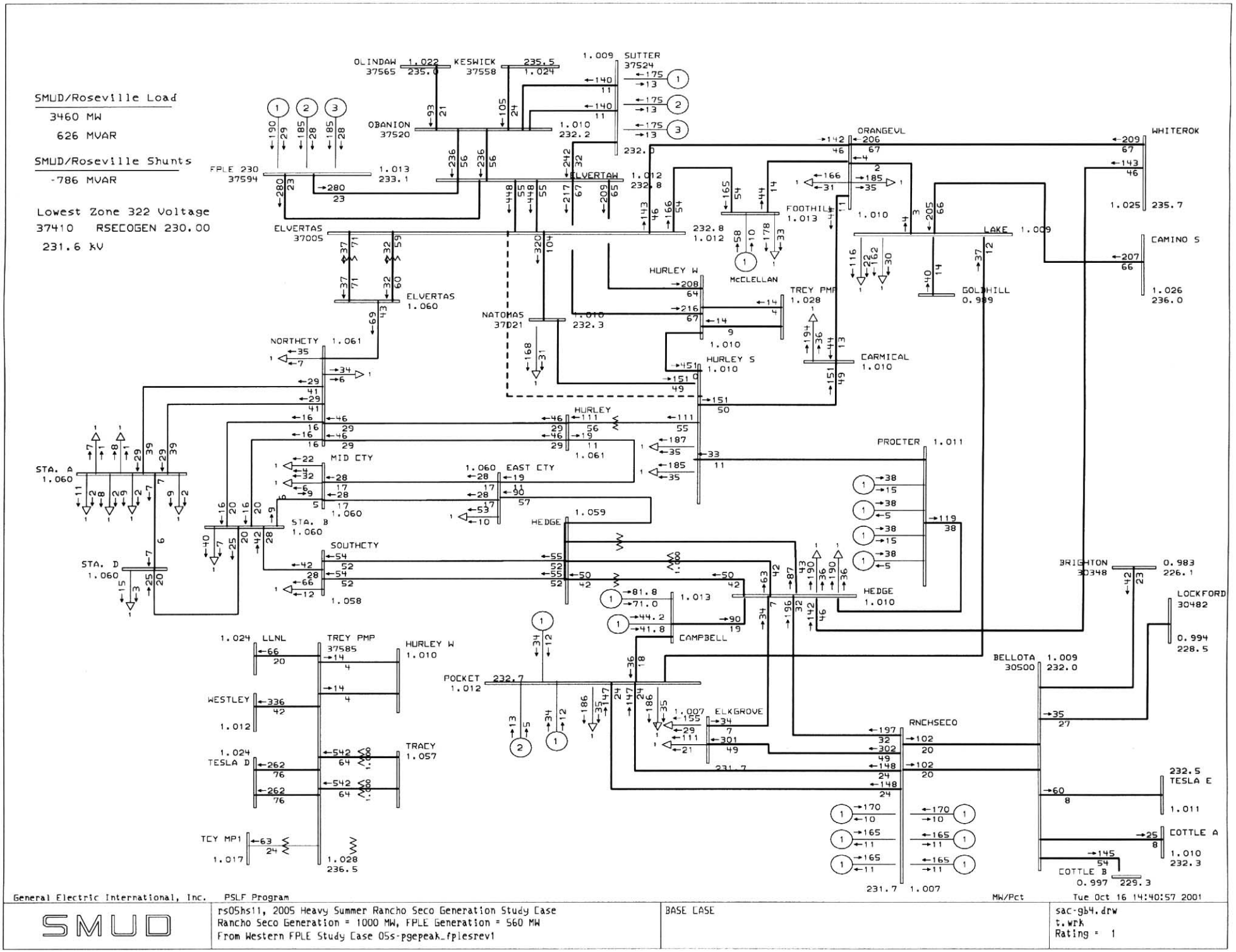
SMUD/Roseville Load
3460 MW
626 MVAR
SMUD/Roseville Shunts
-786 MVAR
Lowest Zone 322 Voltage
37410 RSECOGEN 230.00
231.6 kV
OLINDAW 37565
KESWICK 37558
SUTTER 37524
OBANION 37520
FPLE 230 37594
ELVERTAW
ELVERTAS 37005
ELVERTAS 1.060
NATOMAS 37D21
NORTHCTY
HURLEY W
McCLELLAN
TRCY PMP 1.028
HURLEY S 1.010
CARMICAL 1.010
HURLEY
MID CTY
EAST CTY
STA. A 1.060
STA. B 1.060
STA. D 1.060
SOUTHCTY
HEDGE
CAMPBELL
POCKET 232.7
ELKGROVE
RNCHSECO
PROCTER 1.011
ORANGEVL
WHITEROK
FOOTHILL 1.013
LAKE 1.009
GOLDHILL 0.989
CAMINO S
BRIGHTON 30348
LOCKFORD 30482
BELLOTA 30500
TESLA E
COTTLE A
COTTLE B
LLNL
TRCY PMP 37585
WESTLEY
TESLA D
TRACY 1.057
TCY MP1
General Electric International, Inc. PSLF Program
MW/Pct
Tue Oct 16 14:40:57 2001
SMUD
rs05hs11, 2005 Heavy Summer Rancho Seco Generation Study Case
Rancho Seco Generation = 1000 MW, FPLE Generation = 560 MW
From Western FPLE Study Case 05s-pgepeak_fplesrev1
BASE CASE
sac-gb4.drw
t.wrk
Rating = 1