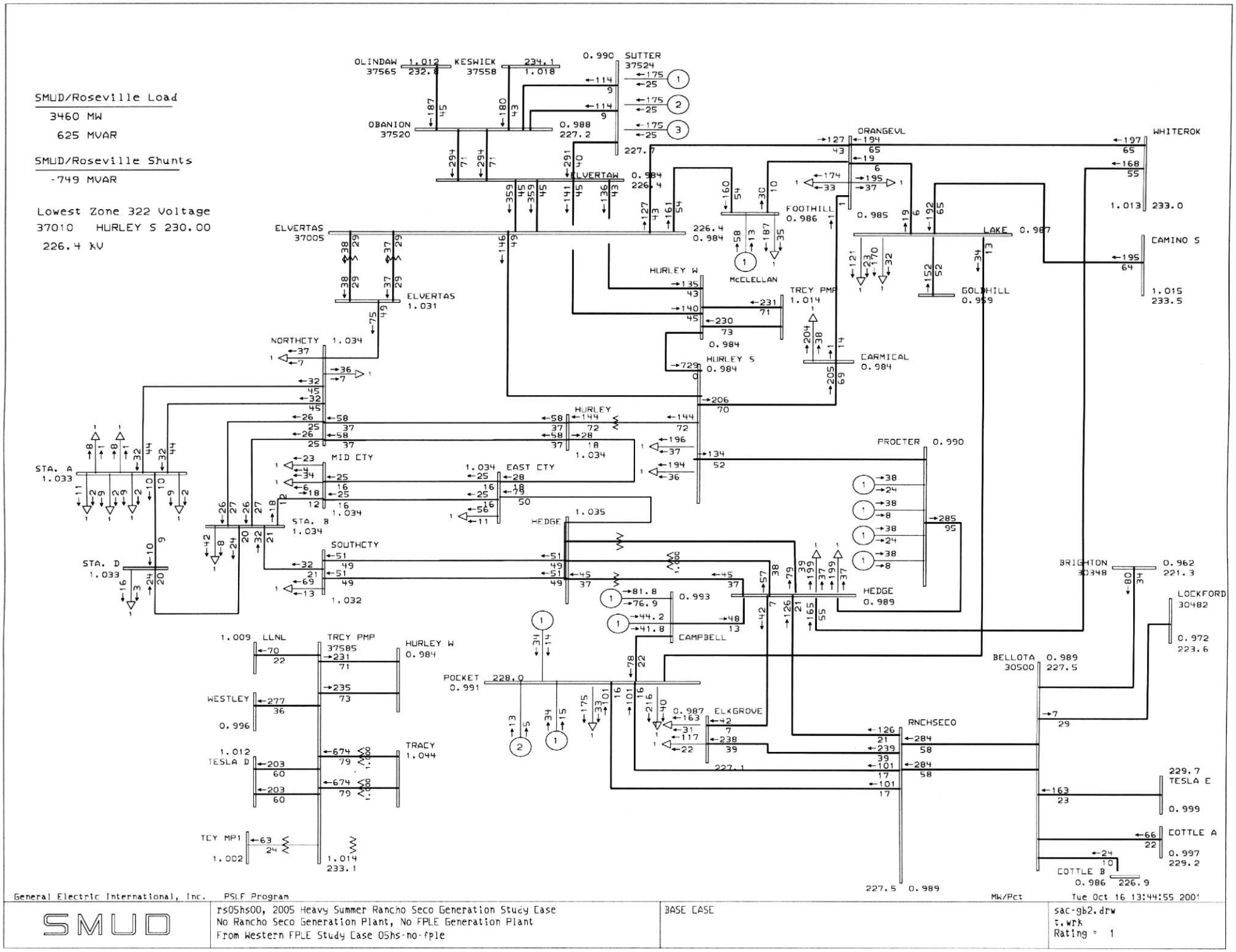
SMUD/Roseville Load
3460 MW
625 MVAR
SMUD/Roseville Shunts
-749 MVAR
Lowest Zone 322 Voltage
37010 HURLEY S 230.00
226.4 kV
OLINDAW 1.012 232.8
KESWICK 37558 234.1 1.018
SUTTER 37524 0.990
OBANION 37520 0.988 227.2
ELVERTAW 0.984 226.4
ELVERTAS 37005 226.4 0.984
ELVERTAS 1.031
NORTHCTY 1.034
STA. A 1.033
STA. B 1.034
STA. D 1.033
MID CTY
EAST CTY 1.034
HURLEY 1.034
HURLEY W
HURLEY S 0.984
McCLELLAN
TRCY PMP 1.014
FOOTHILL 0.986
ORANGEVL
WHITEROK 1.013 233.0
LAKE 0.987
CAMINO S 1.015 233.5
GOLDHILL 0.959
CARMICAL 0.984
PROCTER 0.990
HEDGE 1.035
SOUTHCTY 1.032
HEDGE 0.989
CAMPBELL 0.993
BRIGHTON 30348 0.962 221.3
LOCKFORD 30482 0.972 223.6
BELLOTA 30500 0.989 227.5
RNCHSECO 227.5 0.989
ELKGROVE 0.987 227.1
POCKET 0.991 228.0
LLNL 1.009
TRCY PMP 37585
HURLEY W 0.984
WESTLEY 0.996
TESLA D 1.012
TRACY 1.044
TCY MP1 1.002
1.014 233.1
229.7 TESLA E 0.999
COTTLE A 0.997 229.2
COTTLE B 0.986 226.9
General Electric International, Inc. PSLF Program
MW/Pct
Tue Oct 16 13:44:55 2001
SMUD
rs05hs00, 2005 Heavy Summer Rancho Seco Generation Study Case
No Rancho Seco Generation Plant, No FPLE Generation Plant
From Western FPLE Study Case 05hs-no-fple
BASE CASE
sac-gb2.drw
t.wrk
Rating = 1

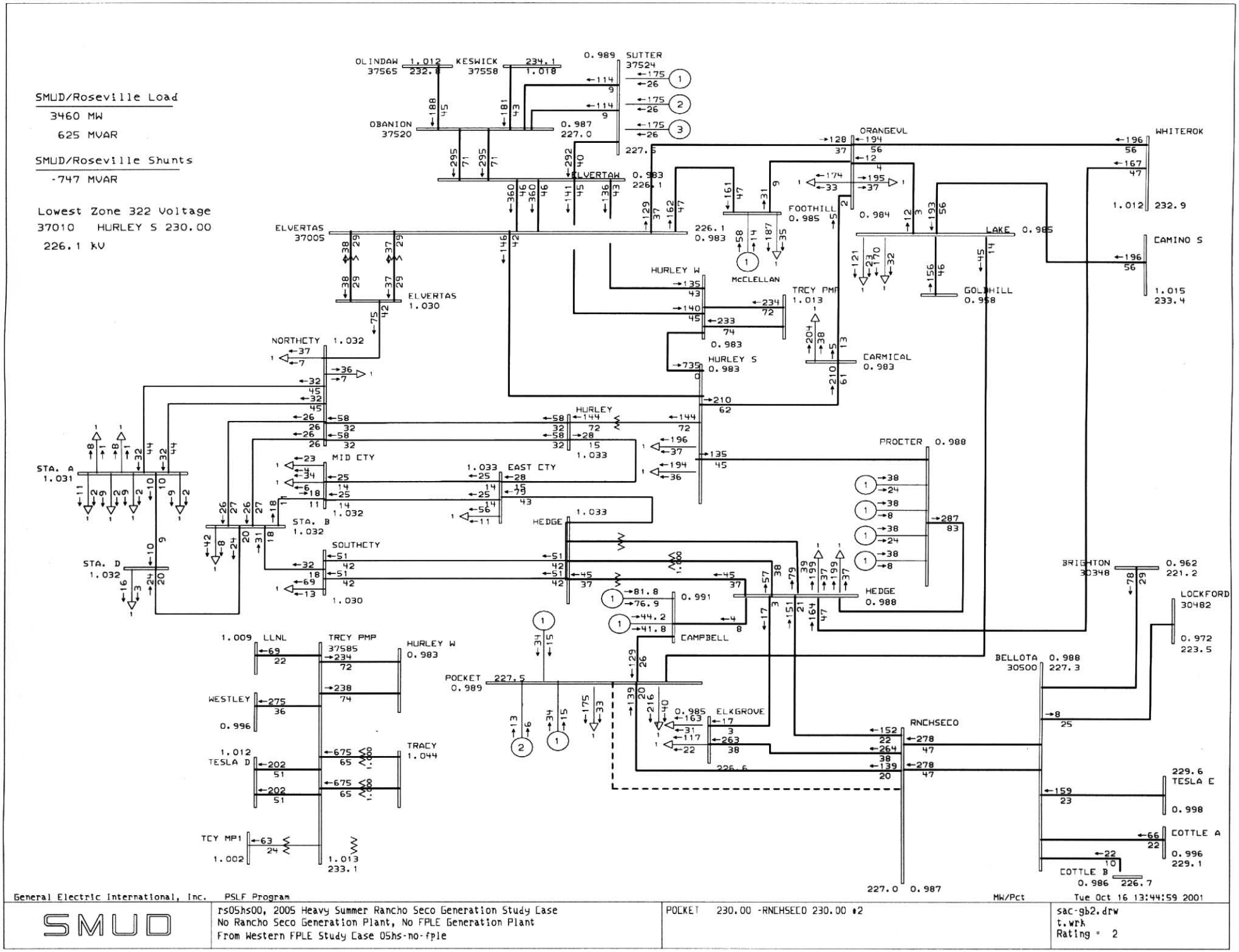
SMUD/Roseville Load
3460 MW
625 MVAR
SMUD/Roseville Shunts
-747 MVAR
Lowest Zone 322 Voltage
37010 HURLEY S 230.00
226.1 kV
OLINDAW 37565 1.012 232.8
KESWICK 37558 234.1 1.018
SUTTER 37524 0.989
OBANION 37520 0.987 227.0
ELVERTAW 226.1 0.983
ELVERTAS 37005
ELVERTAS 1.030
ORANGEVL
WHITEROK
FOOTHILL 0.985
LAKE 0.985
CAMINO S 1.015 233.4
McCLELLAN
HURLEY W
TRCY PMP 1.013
GOLDHILL 0.958
HURLEY S 0.983
CARMICAL 0.983
NORTHCTY 1.032
HURLEY 1.033
PROCTER 0.988
STA. A 1.031
MID CTY
EAST CTY 1.033
STA. B 1.032
HEDGE 1.033
SOUTHCTY 1.030
STA. D 1.032
HEDGE 0.988
BRIGHTON 30348 0.962 221.2
LOCKFORD 30482 0.972 223.5
CAMPBELL 0.991
LLNL 1.009
TRCY PMP 37585
HURLEY W 0.983
POCKET 227.5 0.989
WESTLEY 0.996
TRACY 1.044
TESLA D 1.012
TCY MP1 1.002
1.013 233.1
ELKGROVE 0.985
RNCHSECO 227.0 0.987
BELLOTA 30500 0.988 227.3
TESLA E 229.6 0.998
COTTLE A 0.996 229.1
COTTLE B 0.986 226.7
General Electric International, Inc. PSLF Program
MW/Pct
Tue Oct 16 13:44:59 2001
SMUD
rs05hs00, 2005 Heavy Summer Rancho Seco Generation Study Case
No Rancho Seco Generation Plant, No FPLE Generation Plant
From Western FPLE Study Case 05hs-no-fple
POCKET 230.00 -RNCHSECO 230.00 #2
sac-gb2.drw
t.wrk
Rating = 2

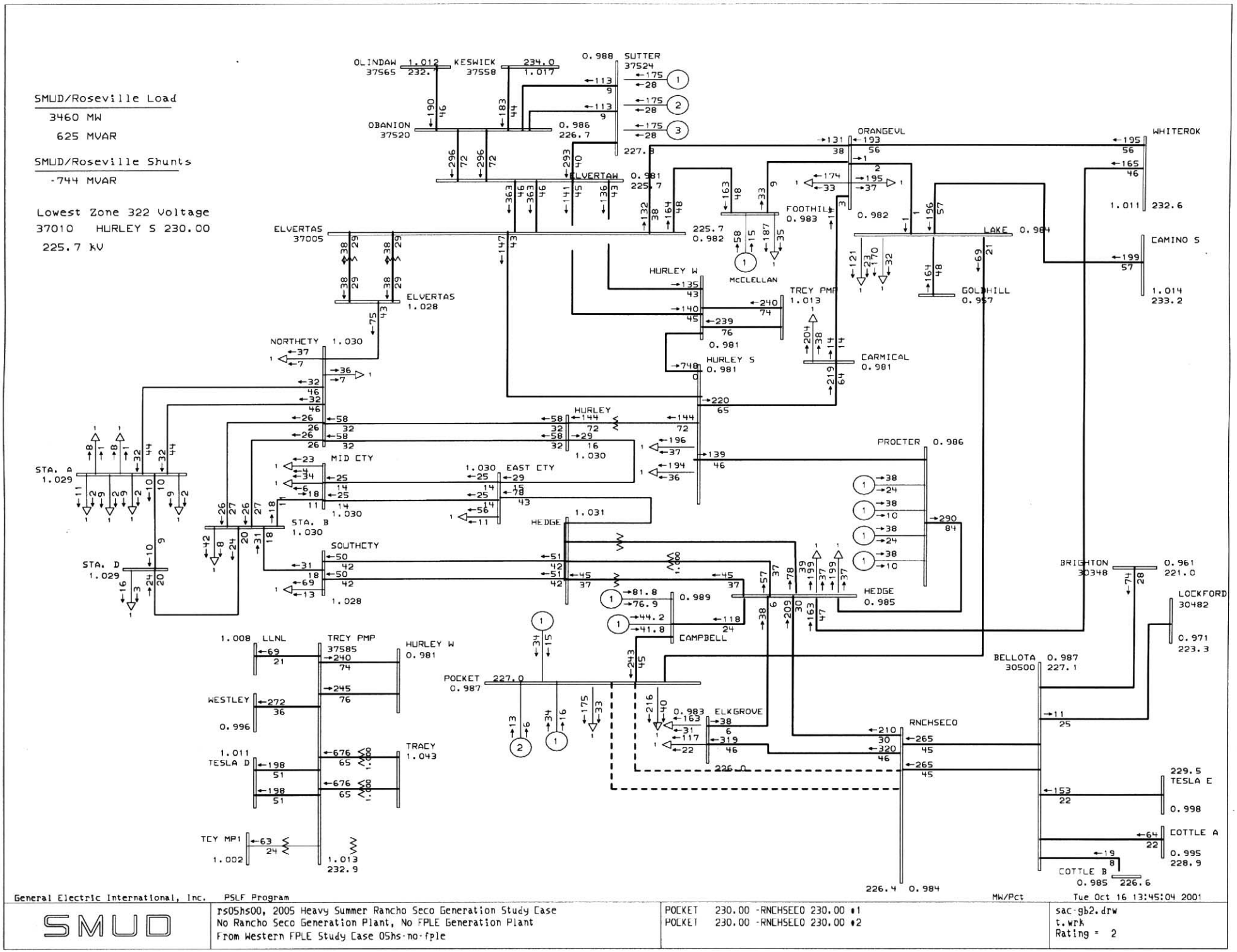
SMUD/Roseville Load
3460 MW
625 MVAR
SMUD/Roseville Shunts
-744 MVAR
Lowest Zone 322 Voltage
37010 HURLEY S 230.00
225.7 kV
OLINDAW 37565 1.012 232.7
KESWICK 37558 234.0 1.017
SUTTER 37524 0.988
OBANION 37520 0.986 226.7
ELVERTAW 0.981 225.7
ELVERTAS 37005 225.7 0.982
ELVERTAS 1.028
NORTHCTY 1.030
STA. A 1.029
STA. B 1.030
STA. D 1.029
MID CTY
EAST CTY 1.030
SOUTHCTY 1.028
HURLEY 1.030
HURLEY W
HURLEY S 0.981
McCLELLAN
TRCY PMP 1.013
CARMICAL 0.981
FOOTHILL 0.983
ORANGEVL 0.982
LAKE 0.984
GOLDHILL 0.967
WHITEROK 1.011 232.6
CAMINO S 1.014 233.2
PROCTER 0.986
HEDGE 1.031
HEDGE 0.985
BRIGHTON 30348 0.961 221.0
LOCKFORD 30482 0.971 223.3
CAMPBELL 0.989
POCKET 227.0 0.987
ELKGROVE 0.983
RNCHSECO 226.4 0.984
BELLOTA 30500 0.987 227.1
TESLA E 229.5 0.998
COTTLE A 0.995 228.9
COTTLE B 0.985 226.6
LLNL 1.008
TRCY PMP 37585
HURLEY W 0.981
WESTLEY 0.996
TESLA D 1.011
TRACY 1.043
TCY MP1 1.002
1.013 232.9
General Electric International, Inc. PSLF Program
MW/Pct
Tue Oct 16 13:45:04 2001
SMUD
rs05hs00, 2005 Heavy Summer Rancho Seco Generation Study Case
No Rancho Seco Generation Plant, No FPLE Generation Plant
From Western FPLE Study Case 05hs-no-fple
POCKET 230.00 -RNCHSECO 230.00 #1
POCKET 230.00 -RNCHSECO 230.00 #2
sac-gb2.drw
t.wrk
Rating = 2

SMUD/Roseville Load

3460 MW

625 MVAR

SMUD/Roseville Shunts

-743 MVAR

Lowest Zone 322 Voltage

37010 HURLEY S 230.00

225.2 kV

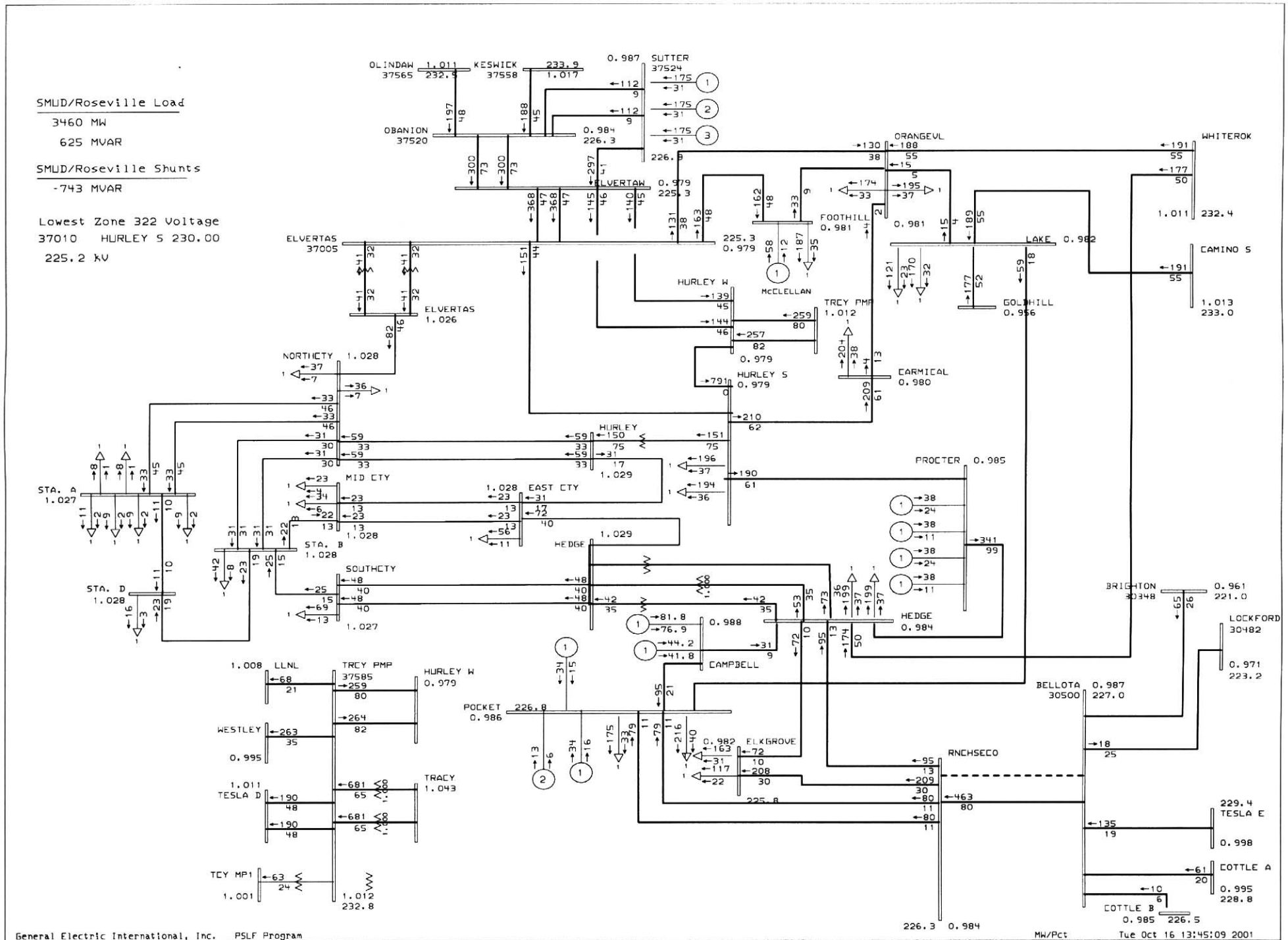

General Electric International, Inc. PSLF Program MW/Pct Tue Oct 16 13:45:09 2001

SMUD

rs05hs00, 2005 Heavy Summer Rancho Seco Generation Study Case
No Rancho Seco Generation Plant, No FPLE Generation Plant
From Western FPLE Study Case 05hs-no-fple

RNCHSECO 230.00 -BELLOTA 230.00 #1

sac-gb2.drw
t.wrk
Rating = 2

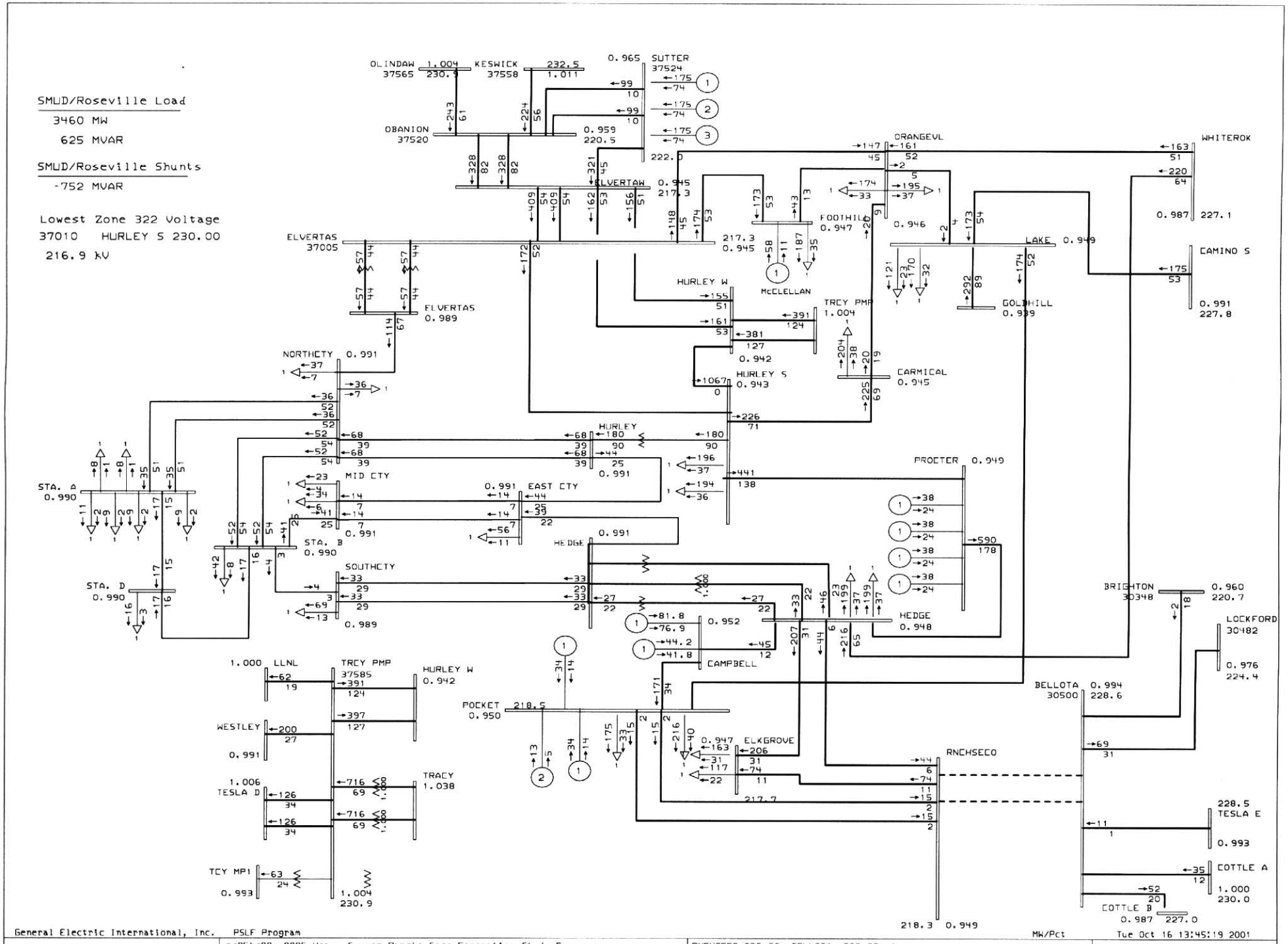
SMUD/Roseville Load
3460 MW
625 MVAR
SMUD/Roseville Shunts
-752 MVAR
Lowest Zone 322 Voltage
37010 HURLEY S 230.00
216.9 kV
OLINDAW 1.004 230.9 37565
KESWICK 232.5 1.011 37558
SUTTER 0.965 37524
OBANION 37520
ELVERTAW 0.945 217.3
ELVERTAS 37005
ELVERTAS 0.989
NORTHCTY 0.991
STA. A 0.990
STA. B 0.990
STA. D 0.990
MID CTY
EAST CTY 0.991
HURLEY 0.991
HEDGE 0.991
SOUTHCTY 0.989
HURLEY W
McCLELLAN
HURLEY S 0.943
TRCY PMP 1.004
CARMICAL 0.945
FOOTHILL 0.947
ORANGEVL 0.946
LAKE 0.949
GOLDHILL 0.939
WHITEROK 0.987 227.1
CAMINO S 0.991 227.8
PROCTER 0.949
HEDGE 0.948
BRIGHTON 30348 0.960 220.7
LOCKFORD 30482 0.976 224.4
BELLOTA 30500 0.994 228.6
TESLA E 228.5 0.993
COTTLE A 1.000 230.0
COTTLE B 0.987 227.0
CAMPBELL 0.952
POCKET 0.950 218.5
ELKGROVE 0.947
RNCHSECO 218.3 0.949
LLNL 1.000
TRCY PMP 37585
HURLEY W 0.942
WESTLEY 0.991
TESLA D 1.006
TRACY 1.038
TCY MP1 0.993
1.004 230.9
General Electric International, Inc. PSLF Program
MW/Pct
Tue Oct 16 13:45:19 2001
SMUD
rs05hs00, 2005 Heavy Summer Rancho Seco Generation Study Case
No Rancho Seco Generation Plant, No FPLE Generation Plant
From Western FPLE Study Case 05hs-no-fple
RNCHSECO 230.00 -BELLOTA 230.00 #1
RNCHSECO 230.00 -BELLOTA 230.00 #2
sac-gb2.drw
t.wrk
Rating = 2

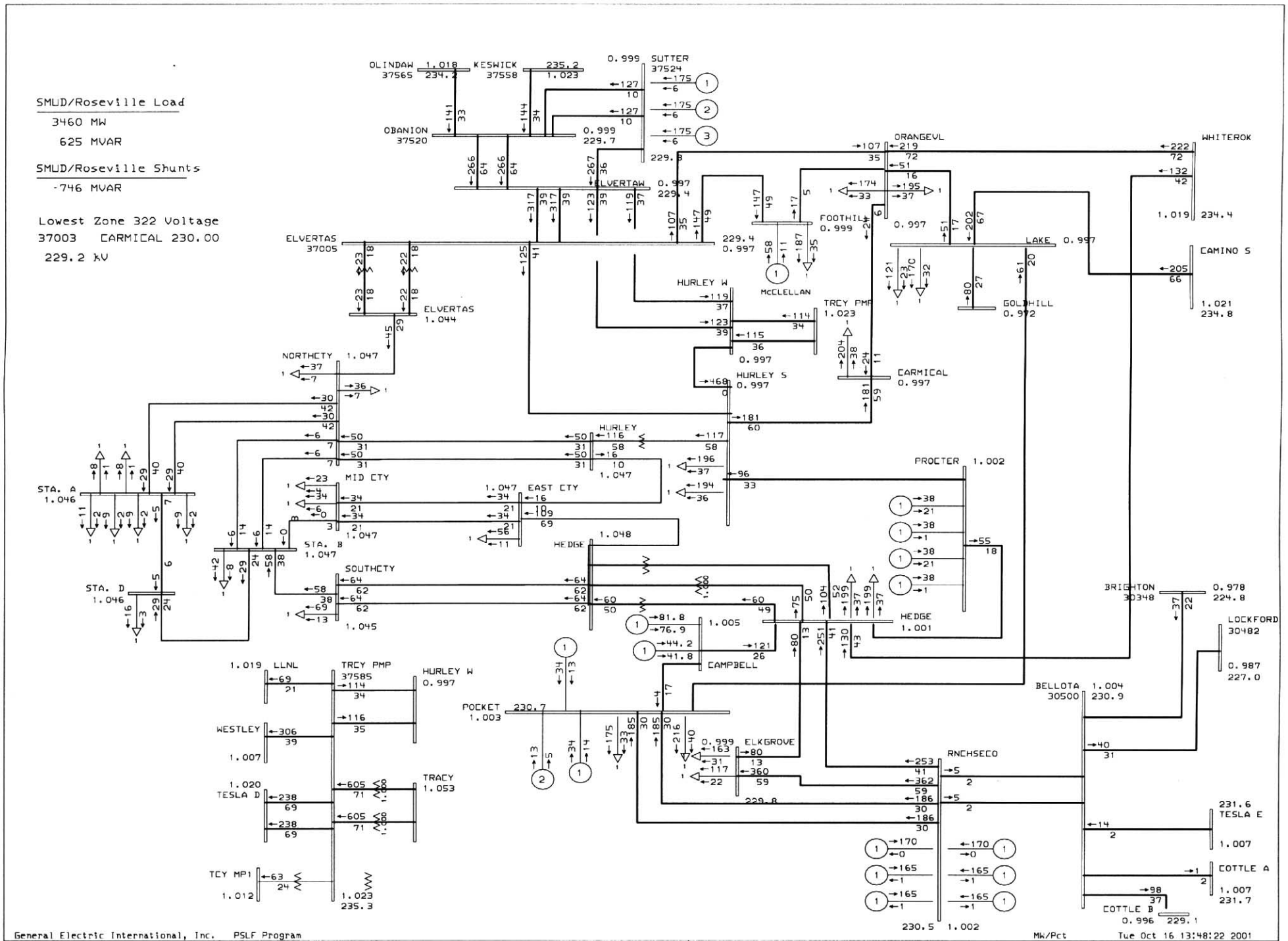
SMUD/Roseville Load
3460 MW
625 MVAR
SMUD/Roseville Shunts
-746 MVAR
Lowest Zone 322 Voltage
37003 CARMICAL 230.00
229.2 kV
OLINDAW 37565
KESWICK 37558
SUTTER 37524
OBANION 37520
ELVERTAW
ELVERTAS 37005
ORANGEVL
WHITEROK
FOOTHILL
LAKE
CAMINO S
HURLEY W
MCCLELLAN
TRCY PMP
GOLDHILL
CARMICAL
HURLEY S
NORTHCTY
HURLEY
PROCTER
STA. A
MID CTY
EAST CTY
STA. B
HEDGE
SOUTHCTY
STA. D
BRIGHTON 30348
LOCKFORD 30482
CAMPBELL
LLNL
TRCY PMP 37585
WESTLEY
TESLA D
TRACY
TCY MP1
POCKET
ELKGROVE
RNCHSECO
BELLOTA 30500
TESLA E
COTTLE A
COTTLE B
General Electric International, Inc. PSLF Program
MW/Pct
Tue Oct 16 13:48:22 2001
SMUD
rs05hs10, 2005 Heavy Summer Rancho Seco Generation Study Case
Rancho Seco Generation = 1000 MW, No FPLE Generation Plant
From Western FPLE Study Case 05hs-no-fple
BASE CASE
sac-gb2.drw
t.wrk
Rating = 1

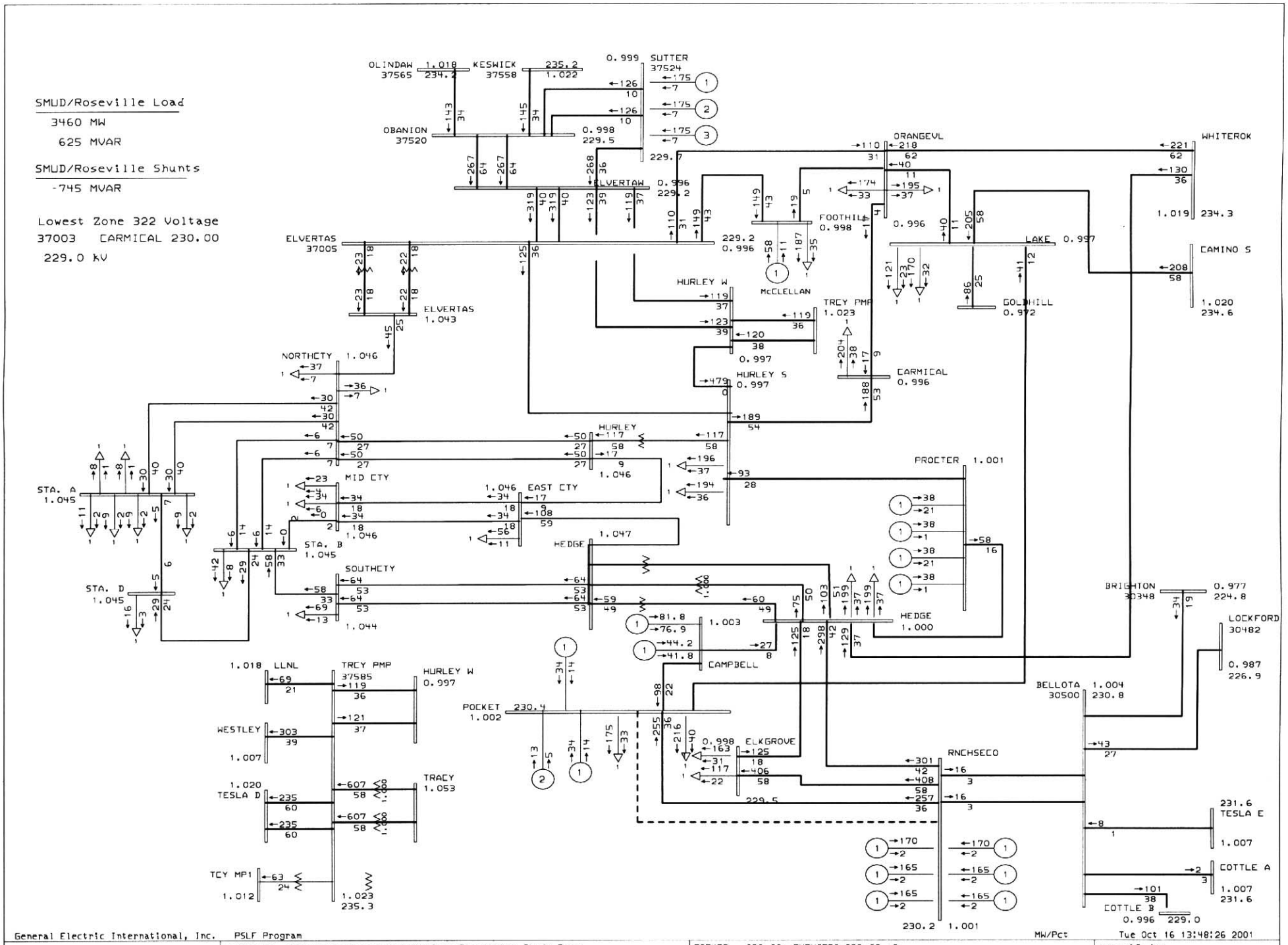
SMUD/Roseville Load
3460 MW
625 MVAR
SMUD/Roseville Shunts
-745 MVAR
Lowest Zone 322 Voltage
37003 CARMICAL 230.00
229.0 kV
OLINDAW 1.018 234.2
37565
KESWICK 235.2 1.022
37558
SUTTER 0.999
37524
OBANION 0.998 229.5
37520
ELVERTAW 0.996 229.2
ELVERTAS 229.2 0.996
37005
ELVERTAS 1.043
NORTHCTY 1.046
STA. A 1.045
STA. B 1.045
STA. D 1.045
MID CTY
EAST CTY 1.046
HURLEY 1.046
HURLEY W
HURLEY S 0.997
McCLELLAN
TRCY PMP 1.023
CARMICAL 0.996
FOOTHILL 0.998
ORANGEVL 229.7
WHITEROK 1.019 234.3
LAKE 0.997
CAMINO S 1.020 234.6
GOLDHILL 0.972
PROCTER 1.001
HEDGE 1.047
SOUTHCTY 1.044
HEDGE 1.000
BRIGHTON 30348 0.977 224.8
LOCKFORD 30482 0.987 226.9
CAMPBELL 1.003
POCKET 230.4 1.002
ELKGROVE 0.998
RNCHSECO 230.2 1.001
BELLOTA 30500 1.004 230.8
TESLA E 231.6 1.007
COTTLE A 1.007 231.6
COTTLE B 0.996 229.0
1.018 LLNL
TRCY PMP 37585
HURLEY W 0.997
WESTLEY 1.007
TESLA D 1.020
TRACY 1.053
TCY MP1 1.012
1.023 235.3
General Electric International, Inc. PSLF Program
MW/Pct
Tue Oct 16 13:48:26 2001
SMUD
rs05hs10, 2005 Heavy Summer Rancho Seco Generation Study Case
Rancho Seco Generation = 1000 MW, No FPLE Generation Plant
From Western FPLE Study Case 05hs-no-fple
POCKET 230.00 -RNCHSECO 230.00 #2
sac-gb2.drw
t.wrk
Rating = 2

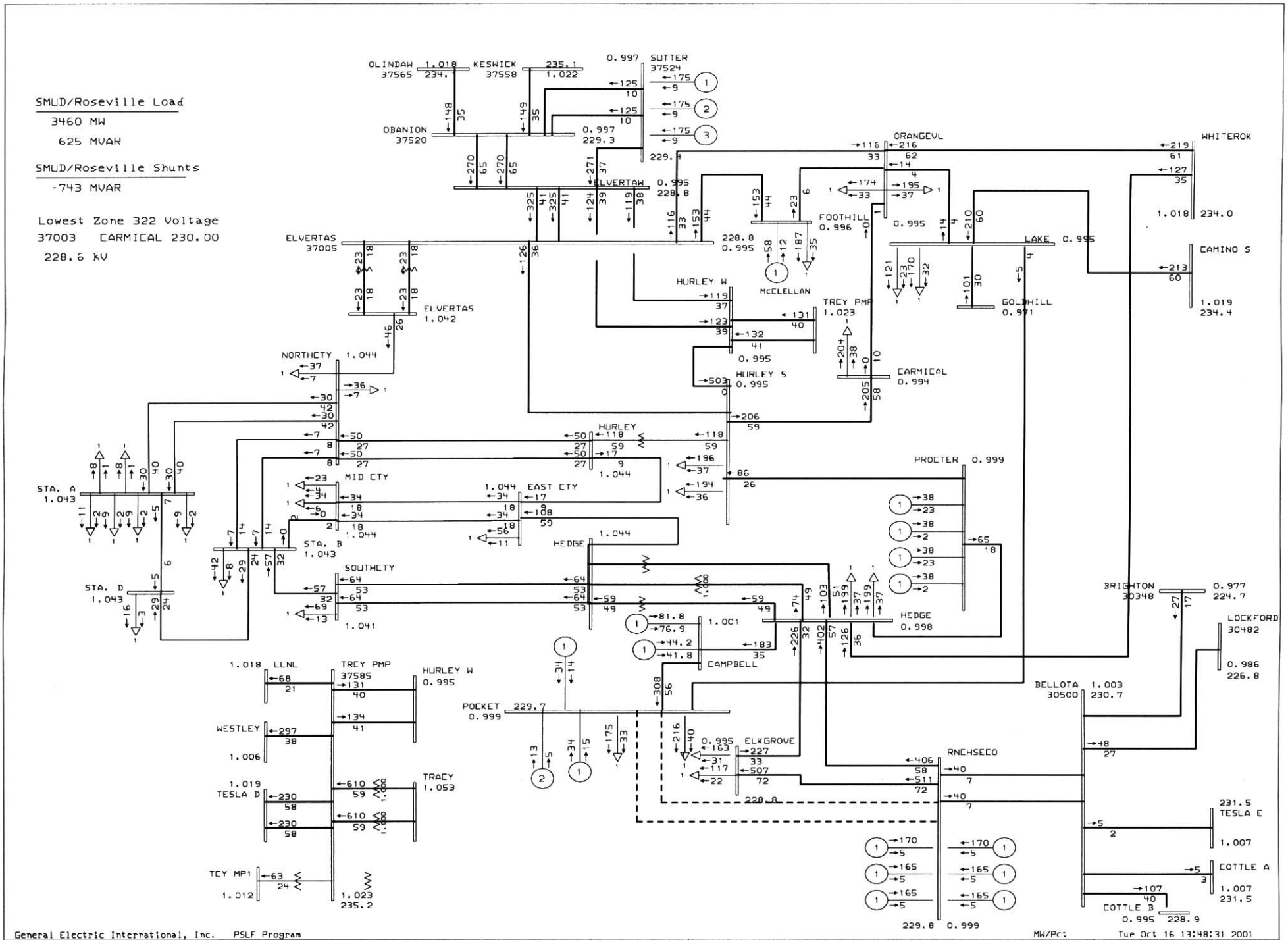
SMUD/Roseville Load
3460 MW
625 MVAR
SMUD/Roseville Shunts
-743 MVAR
Lowest Zone 322 Voltage
37003 CARMICAL 230.00
228.6 kV
OLINDAW 1.018 234.1
37565
KESWICK 235.1 1.022
37558
OBANION
37520
SUTTER 0.997
37524
ELVERTAW 0.995 228.8
ELVERTAS
37005
ELVERTAS 1.042
NORTHCTY 1.044
STA. A 1.043
STA. B 1.043
STA. D 1.043
MID CTY
EAST CTY 1.044
HURLEY
HURLEY W
HURLEY S 0.995
HEDGE 1.044
SOUTHCTY
1.041
McCLELLAN
FOOTHILL 0.996
ORANGEVL
WHITEROK
LAKE 0.995
CAMINO S
GOLDHILL 0.991
TRCY PMP 1.023
CARMICAL 0.994
PROCTER 0.999
HEDGE 0.998
BRIGHTON 30348 0.977 224.7
LOCKFORD 30482 0.986 226.8
CAMPBELL
POCKET 229.7 0.999
ELKGROVE 0.995
RNCHSECO
BELLOTA 1.003 230.7
30500
231.5 TESLA E 1.007
COTTLE A 1.007 231.5
COTTLE B 0.995 228.9
LLNL 1.018
TRCY PMP 37585
HURLEY W 0.995
WESTLEY 1.006
TRACY 1.053
TESLA D 1.019
TCY MP1 1.012
1.023 235.2
General Electric International, Inc. PSLF Program
MW/Pct
Tue Oct 16 13:48:31 2001
SMUD
rs05hs10, 2005 Heavy Summer Rancho Seco Generation Study Case
Rancho Seco Generation = 1000 MW, No FPLE Generation Plant
From Western FPLE Study Case 05hs-no-fple
POCKET 230.00 -RNCHSECO 230.00 #1
POCKET 230.00 -RNCHSECO 230.00 #2
sac-gb2.drw
t.wrk
Rating = 2

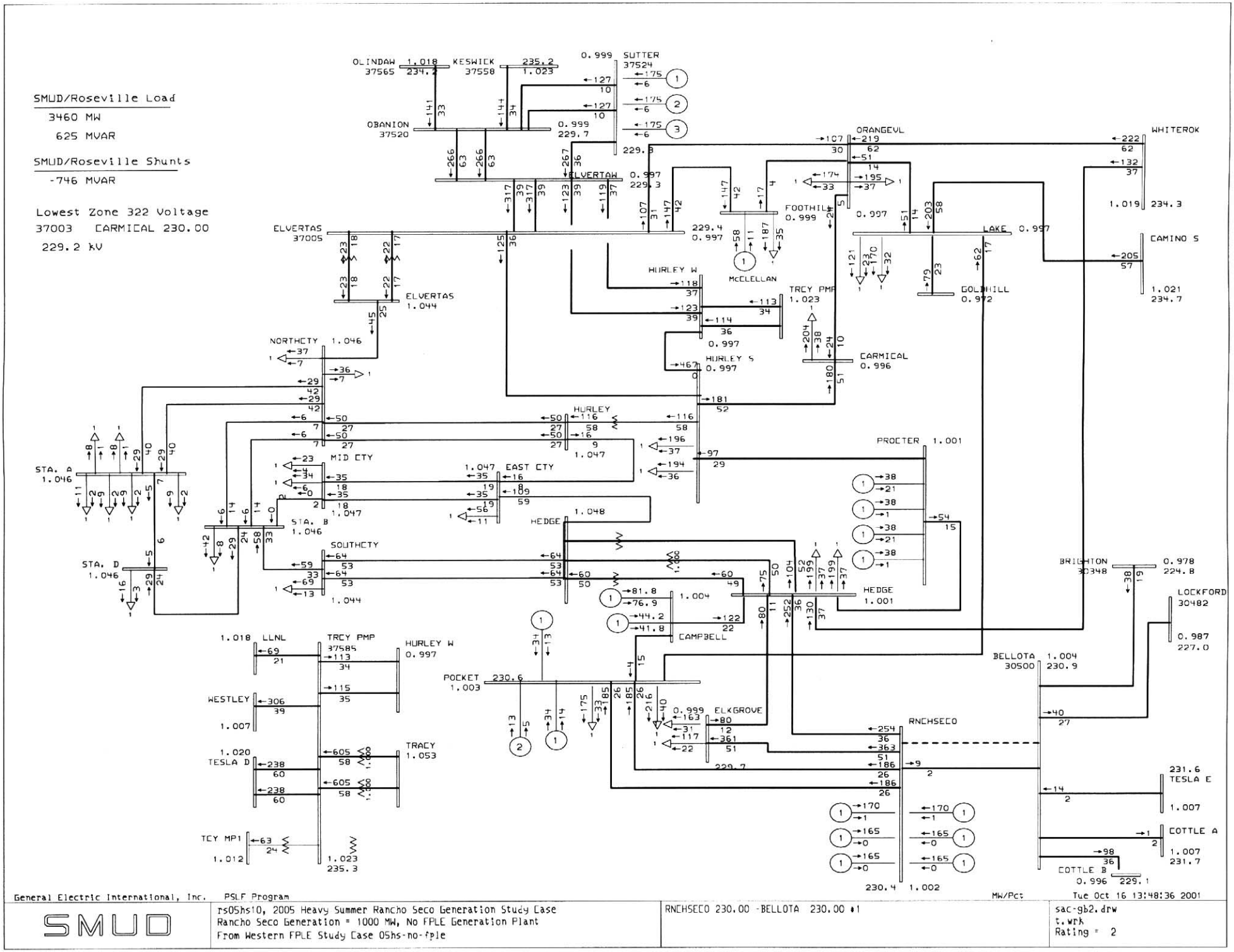
SMUD/Roseville Load
3460 MW
625 MVAR
SMUD/Roseville Shunts
-746 MVAR
Lowest Zone 322 Voltage
37003 CARMICAL 230.00
229.2 kV
OLINDAW 37565
KESWICK 37558
SUTTER 37524
OBANION 37520
ELVERTAW
ORANGEVL
WHITEROK
FOOTHILL
LAKE
CAMINO S
ELVERTAS 37005
ELVERTAS
HURLEY W
McCLELLAN
TRCY PMP
GOLDHILL
CARMICAL
HURLEY S
NORTHCTY
HURLEY
PROCTER
STA. A
MID CTY
EAST CTY
STA. B
HEDGE
STA. D
SOUTHCTY
BRIGHTON 30348
LOCKFORD 30482
LLNL
TRCY PMP 37585
HURLEY W
CAMPBELL
BELLOTA 30500
POCKET
WESTLEY
ELKGROVE
RNCHSECO
TESLA D
TRACY
TESLA E
TCY MP1
COTTLE A
COTTLE B
General Electric International, Inc. PSLF Program
MW/Pct
Tue Oct 16 13:48:36 2001
SMUD
rs05hs10, 2005 Heavy Summer Rancho Seco Generation Study Case
Rancho Seco Generation = 1000 MW, No FPLE Generation Plant
From Western FPLE Study Case 05hs-no-fple
RNCHSECO 230.00 -BELLOTA 230.00 ♦1
sac-gb2.drw
t.wrk
Rating = 2

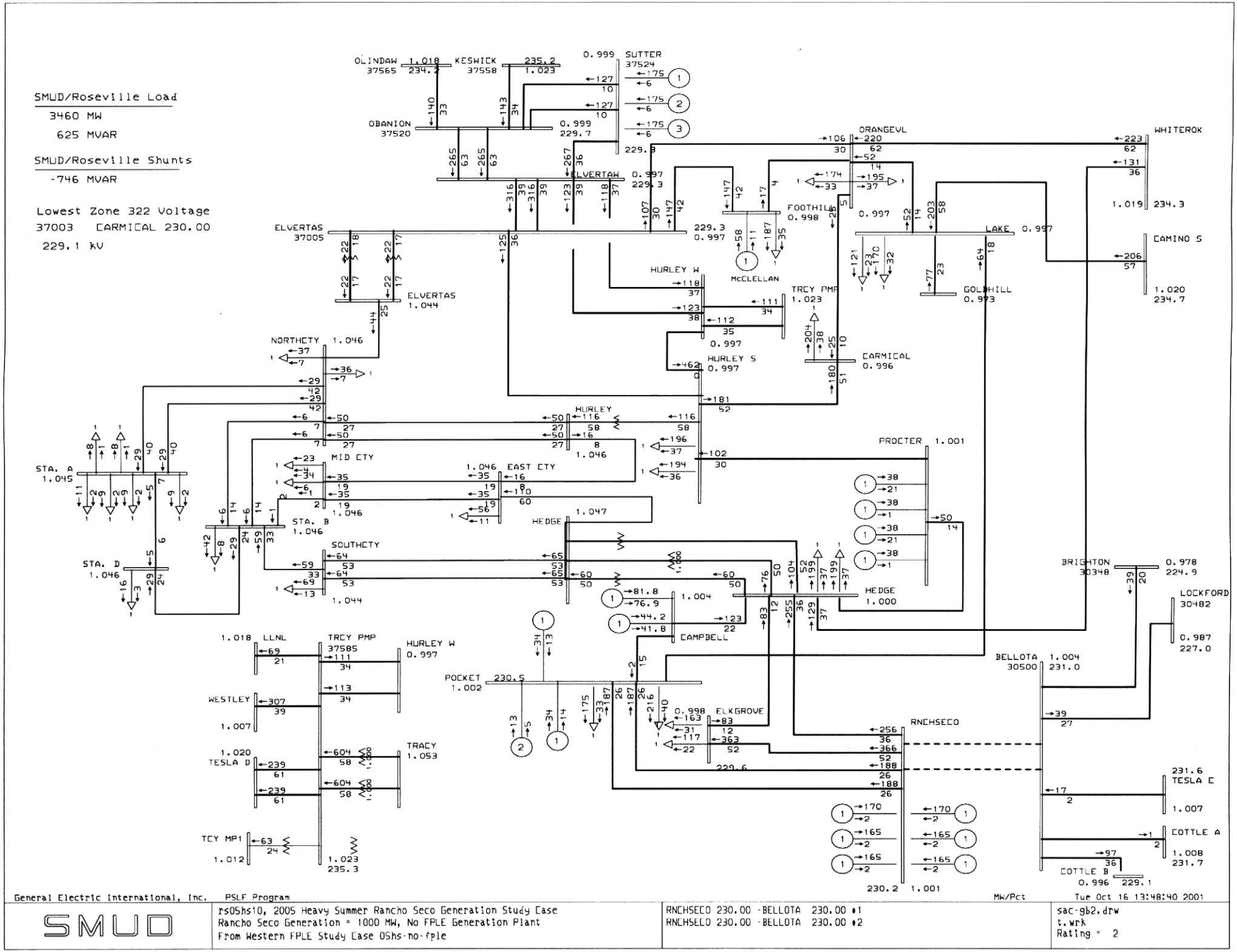
SMUD/Roseville Load
3460 MW
625 MVAR
SMUD/Roseville Shunts
-746 MVAR
Lowest Zone 322 Voltage
37003 CARMICAL 230.00
229.1 kV
OLINDAW 1.018 234.2
37565
KESWICK 235.2 1.023
37558
0.999 SUTTER
37524
OBANION
37520
0.999 229.7
ELVERTAW 0.997 229.3
ORANGEVL
WHITEROK
1.019 234.3
FOOTHILL 0.998
LAKE 0.997
CAMINO S
1.020 234.7
ELVERTAS
37005
ELVERTAS 1.044
HURLEY W
MCCLELLAN
TRCY PMP 1.023
GOLDHILL 0.993
CARMICAL 0.996
HURLEY S 0.997
NORTHCTY 1.046
HURLEY 1.046
PROCTER 1.001
STA. A 1.045
MID CTY
EAST CTY
STA. B 1.046
HEDGE 1.047
STA. D 1.046
SOUTHCTY 1.044
HEDGE 1.000
BRIGHTON 30348
0.978 224.9
LOCKFORD 30482
0.987 227.0
CAMPBELL 1.004
1.018 LLNL
TRCY PMP 37585
HURLEY W 0.997
POCKET 230.5 1.002
BELLOTA 30500 1.004 231.0
WESTLEY 1.007
0.998 ELKGROVE
RNCHSECO
1.020 TESLA D
TRACY 1.053
231.6 TESLA E
1.007
COTTLE A
1.008 231.7
TCY MP1 1.012
1.023 235.3
COTTLE B 0.996 229.1
230.2 1.001
General Electric International, Inc. PSLF Program
MW/Pct
Tue Oct 16 13:48:40 2001
SMUD
rs05hs10, 2005 Heavy Summer Rancho Seco Generation Study Case
Rancho Seco Generation = 1000 MW, No FPLE Generation Plant
From Western FPLE Study Case 05hs-no-fple
RNCHSECO 230.00 -BELLOTA 230.00 #1
RNCHSECO 230.00 -BELLOTA 230.00 #2
sac-gb2.drw
t.wrk
Rating = 2

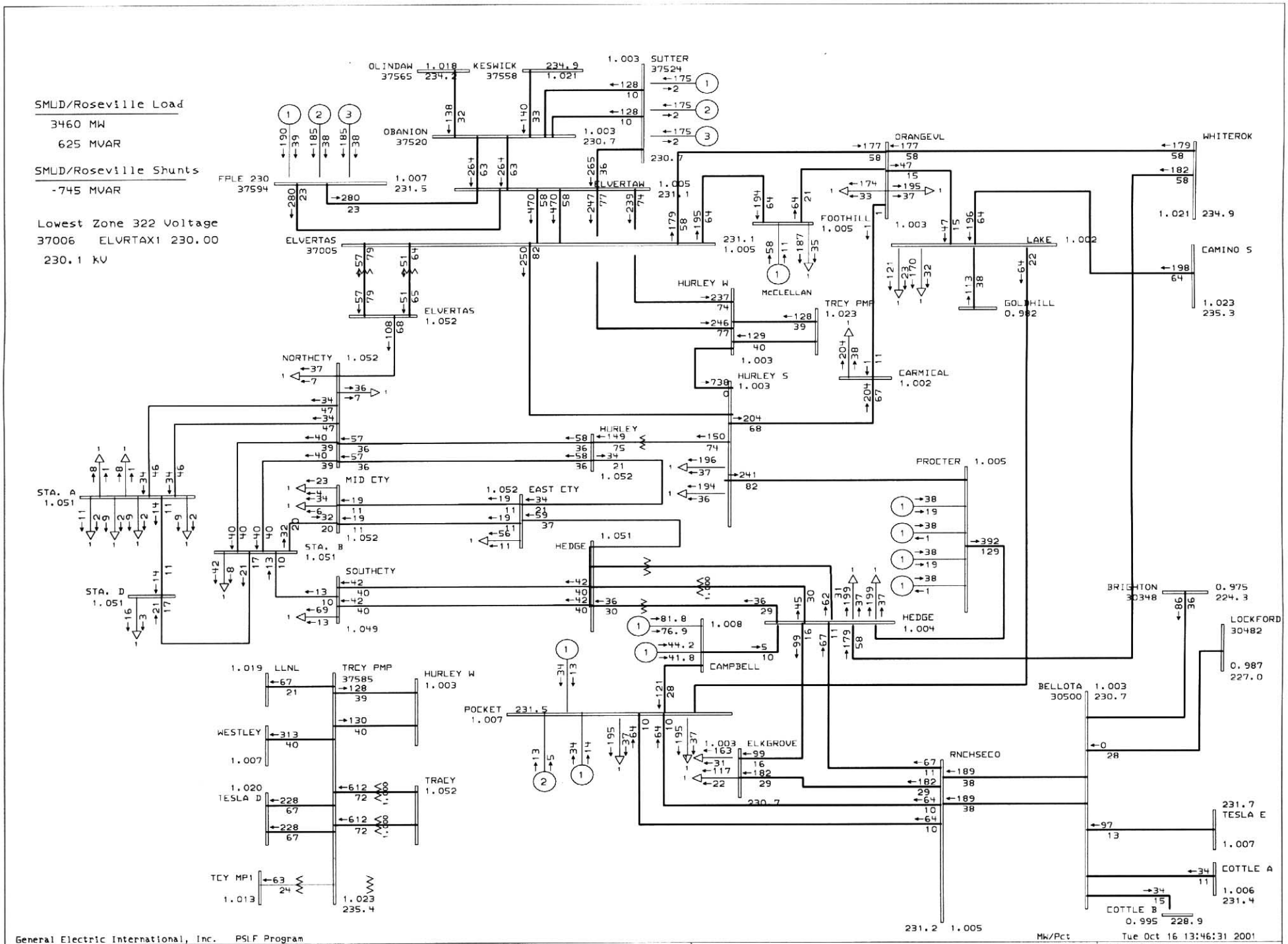
SMUD/Roseville Load
3460 MW
625 MVAR
SMUD/Roseville Shunts
-745 MVAR
Lowest Zone 322 Voltage
37006 ELVRTAX1 230.00
230.1 kV
OLINDAW 1.018 234.2
KESWICK 37558 234.9 1.021
SUTTER 37524 1.003
OBANION 37520 1.003 230.7
FPLE 230 37594 1.007 231.5
ELVERTAW 1.005 231.1
ELVERTAS 37005 231.1 1.005
ELVERTAS 1.052
NORTHCTY 1.052
STA. A 1.051
STA. B 1.051
STA. D 1.051
MID CTY
EAST CTY 1.052
SOUTHCTY 1.049
HEDGE 1.051
HURLEY 1.052
HURLEY W
HURLEY S 1.003
McCLELLAN
FOOTHILL 1.005
TRCY PMP 1.023
CARMICAL 1.002
ORANGEVL
WHITEROK 1.021 234.9
CAMINO S 1.023 235.3
LAKE 1.002
GOLDHILL 0.982
PROCTER 1.005
HEDGE 1.004
BRIGHTON 30348 0.975 224.3
LOCKFORD 30482 0.987 227.0
BELLOTA 30500 1.003 230.7
RNCHSECO 231.2 1.005
TESLA E 231.7 1.007
COTTLE A 1.006 231.4
COTTLE B 0.995 228.9
CAMPBELL 1.008
POCKET 1.007 231.5
ELKGROVE 1.003 230.7
LLNL 1.019
TRCY PMP 37585
HURLEY W 1.003
WESTLEY 1.007
TRACY 1.052
TESLA D 1.020
TCY MP1 1.013
1.023 235.4
General Electric International, Inc. PSLF Program
MW/Pct
Tue Oct 16 13:46:31 2001
SMUD
rs05hs01, 2005 Heavy Summer Rancho Seco Generation Study Case
No Rancho Seco Generation Plant, FPLE Generation = 560 MW
From Western FPLE Study Case 05s-pgepeak_fplesrev1
BASE CASE
sac-gb2.drw
t.wrk
Rating = 1

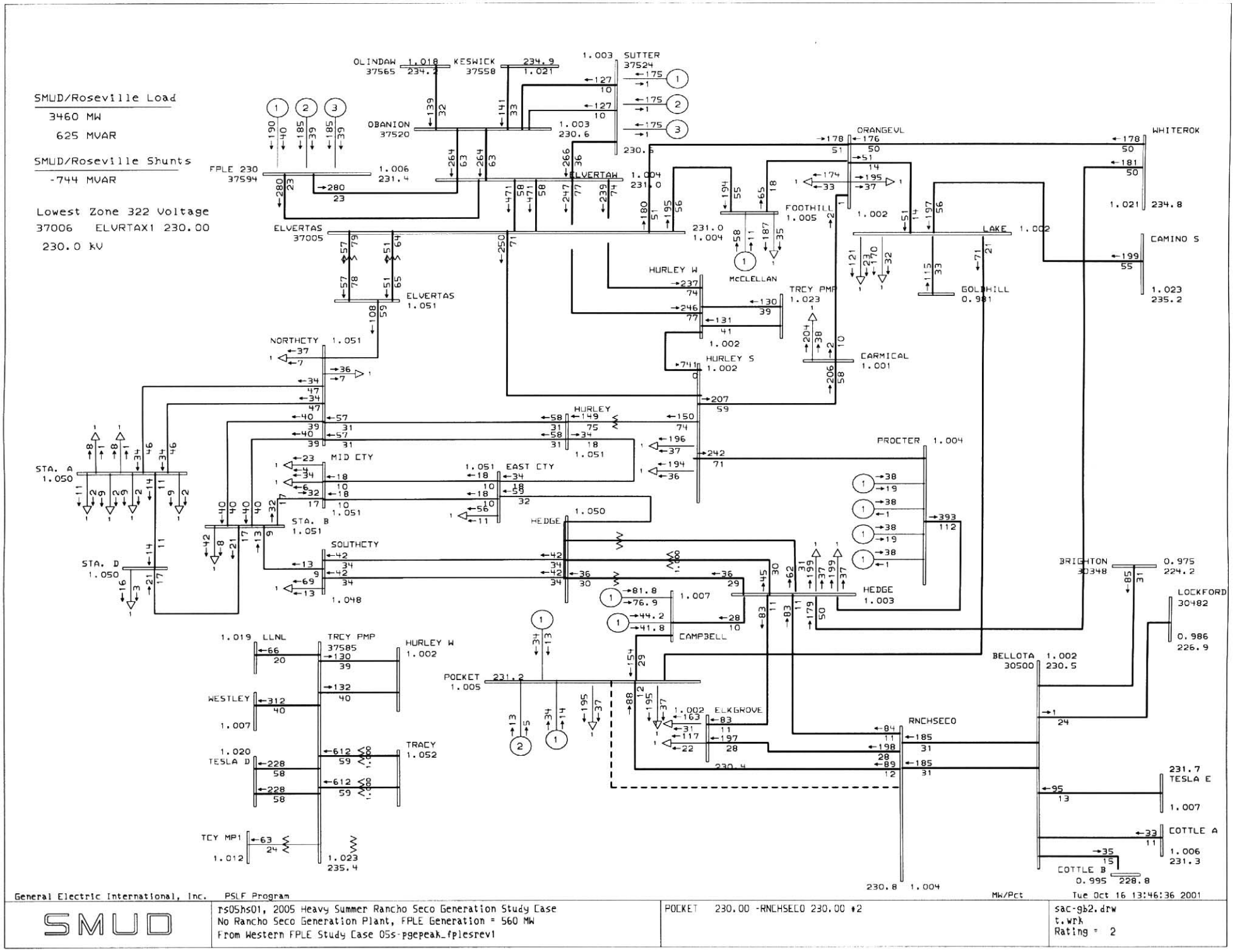
SMUD/Roseville Load
3460 MW
625 MVAR
SMUD/Roseville Shunts
-744 MVAR
Lowest Zone 322 Voltage
37006 ELVRTAX1 230.00
230.0 kV
OLINDAW 37565
KESWICK 37558
SUTTER 37524
OBANION 37520
FPLE 230 37594
ELVERTAW
ELVERTAS 37005
ELVERTAS 1.051
ORANGEVL
WHITEROK
FOOTHILL 1.005
McCLELLAN
LAKE 1.002
CAMINO S
GOLDHILL 0.981
HURLEY W
TRCY PMP 1.023
CARMICAL 1.001
HURLEY S 1.002
NORTHCTY 1.051
HURLEY
PROCTER 1.004
STA. A 1.050
MID CTY
EAST CTY
STA. B 1.051
HEDGE 1.050
SOUTHCTY
STA. D 1.050
HEDGE 1.003
BRIGHTON 30348
LOCKFORD 30482
CAMPBELL
LLNL
TRCY PMP 37585
HURLEY W 1.002
POCKET 1.005
BELLOTA 30500
WESTLEY
ELKGROVE
RNCHSECO
TESLA D
TRACY 1.052
TESLA E
COTTLE A
TCY MP1
COTTLE B
General Electric International, Inc. PSLF Program
MW/Pct
Tue Oct 16 13:46:36 2001
SMUD
rs05hs01, 2005 Heavy Summer Rancho Seco Generation Study Case
No Rancho Seco Generation Plant, FPLE Generation = 560 MW
From Western FPLE Study Case 05s-pgepeak_fplesrev1
POCKET 230.00 -RNCHSECO 230.00 #2
sac-gb2.drw
t.wrk
Rating = 2

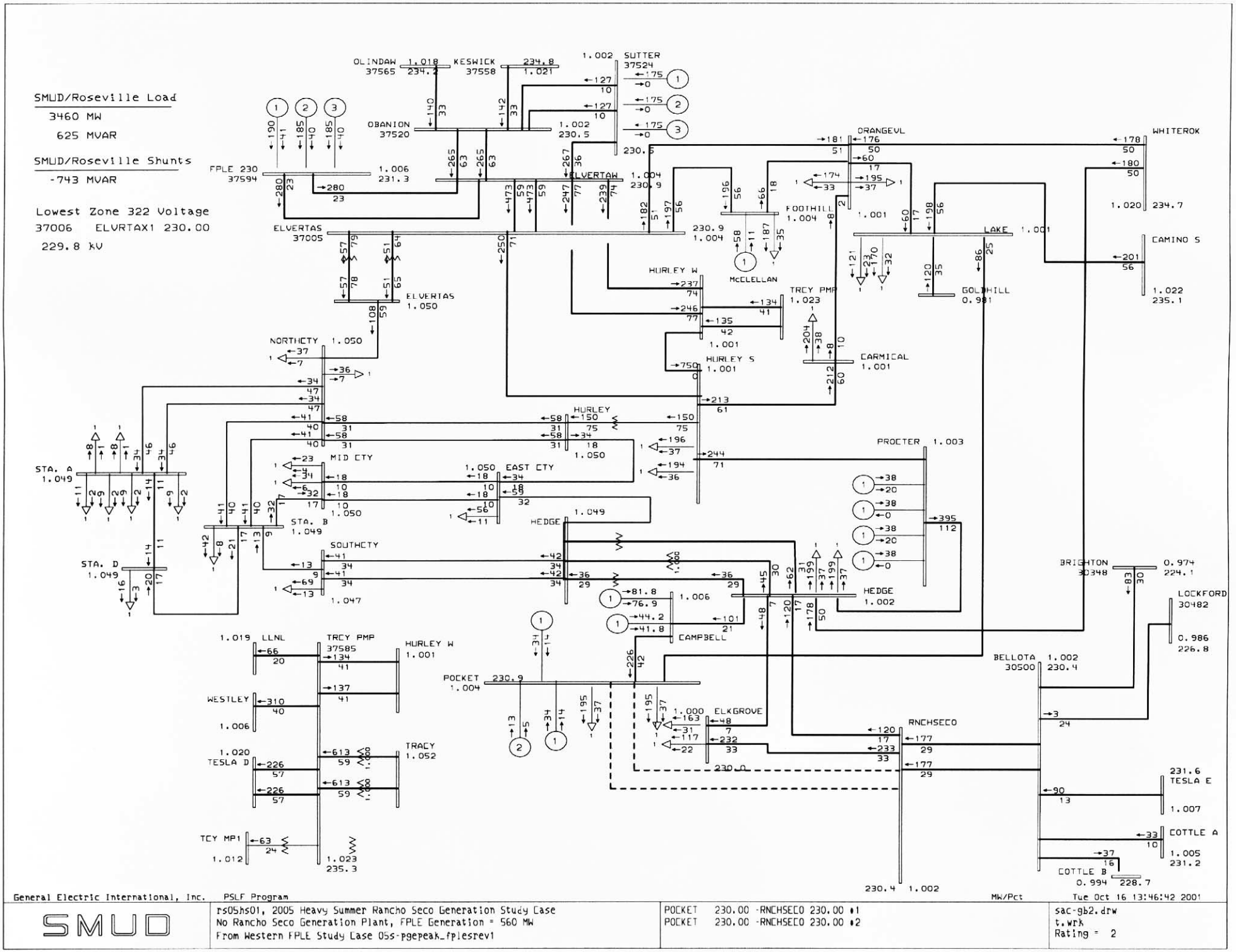
SMUD/Roseville Load
3460 MW
625 MVAR
SMUD/Roseville Shunts
-743 MVAR
Lowest Zone 322 Voltage
37006 ELVRTAX1 230.00
229.8 kV
OLINDAW 37565
KESWICK 37558
SUTTER 37524
OBANION 37520
FPLE 230 37594
ELVERTAW
ELVERTAS 37005
ELVERTAS 1.050
NORTHCTY
HURLEY W
HURLEY S
HURLEY
McCLELLAN
TRCY PMP 1.023
CARMICAL 1.001
FOOTHILL 1.004
ORANGEVL
WHITEROK
LAKE
CAMINO S
GOLDHILL 0.981
PROCTER 1.003
STA. A 1.049
STA. B 1.049
STA. D 1.049
MID CTY
EAST CTY
SOUTHCTY
HEDGE
BRIGHTON 30348
LOCKFORD 30482
BELLOTA 30500
CAMPBELL
POCKET 1.004
ELKGROVE
RNCHSECO
LLNL
TRCY PMP 37585
WESTLEY
TESLA D
TRACY 1.052
TCY MP1
TESLA E
COTTLE A
COTTLE B
General Electric International, Inc.
PSLF Program
MW/Pct
Tue Oct 16 13:46:42 2001
SMUD
rs05hs01, 2005 Heavy Summer Rancho Seco Generation Study Case
No Rancho Seco Generation Plant, FPLE Generation = 560 MW
From Western FPLE Study Case 05s-pgepeak_fplesrev1
POCKET 230.00 -RNCHSECO 230.00 #1
POCKET 230.00 -RNCHSECO 230.00 #2
sac-gb2.drw
t.wrk
Rating = 2

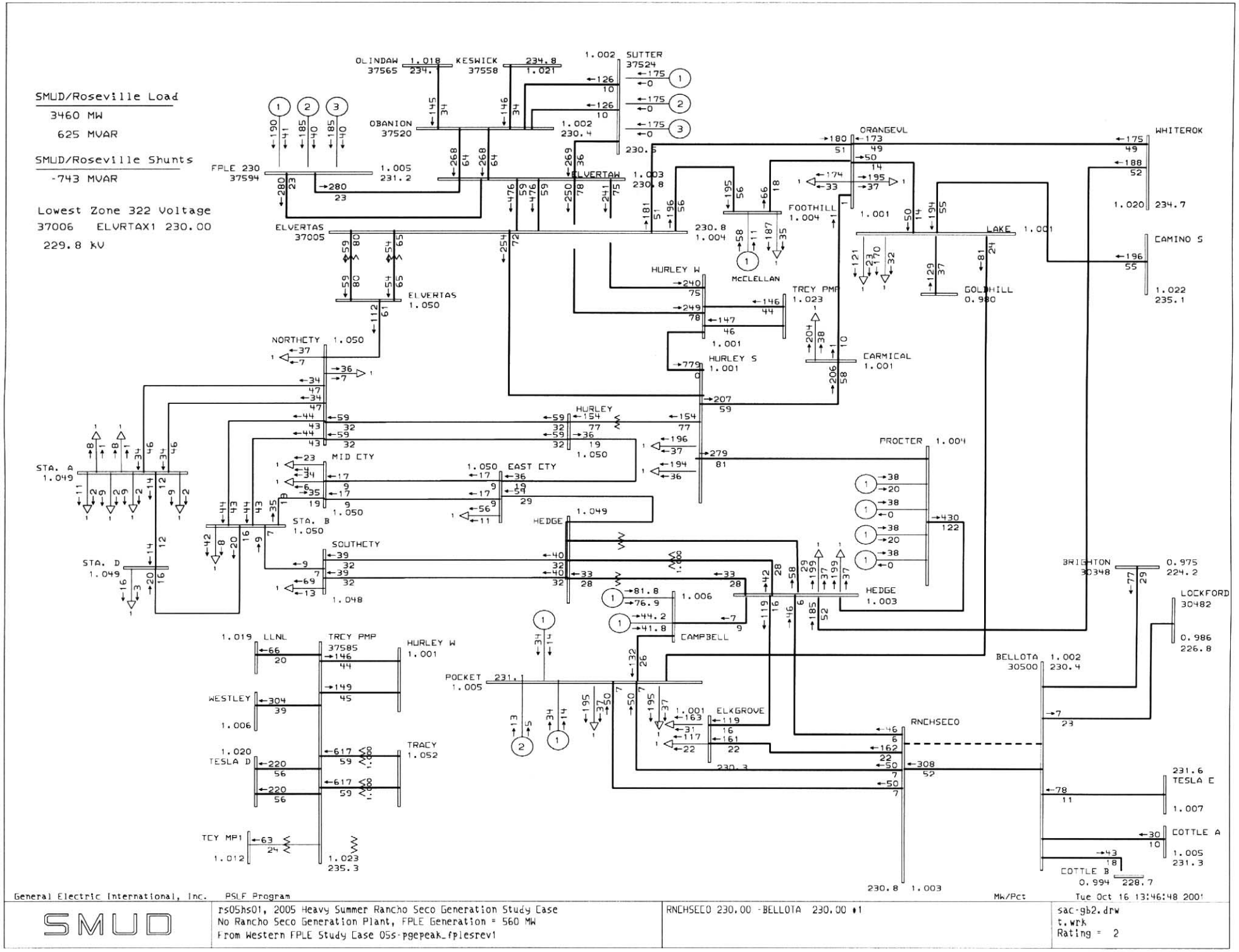
SMUD/Roseville Load
3460 MW
625 MVAR
SMUD/Roseville Shunts
-743 MVAR
Lowest Zone 322 Voltage
37006 ELVRTAX1 230.00
229.8 kV
OLINDAW 37565
KESWICK 37558
SUTTER 37524
OBANION 37520
FPLE 230 37594
ELVERTAW
ELVERTAS 37005
ELVERTAS 1.050
ORANGEVL
WHITEROK
FOOTHILL 1.004
LAKE
CAMINO S
McCLELLAN
HURLEY W
TRCY PMP 1.023
GOLDHILL 0.980
HURLEY S 1.001
CARMICAL 1.001
NORTHCTY 1.050
HURLEY
PROCTER 1.004
STA. A 1.049
MID CTY
EAST CTY
STA. B 1.050
HEDGE 1.049
STA. D 1.049
SOUTHCTY
HEDGE 1.003
BRIGHTON 30348
LOCKFORD 30482
CAMPBELL
LLNL
TRCY PMP 37585
HURLEY W 1.001
POCKET 1.005
BELLOTA 30500
WESTLEY
ELKGROVE
RNCHSECO
TRACY 1.052
TESLA D
TESLA E
TCY MP1
COTTLE A
COTTLE B
General Electric International, Inc.
PSLF Program
Mw/Pct
Tue Oct 16 13:46:48 2001
SMUD
rs05hs01, 2005 Heavy Summer Rancho Seco Generation Study Case
No Rancho Seco Generation Plant, FPLE Generation = 560 MW
From Western FPLE Study Case 05s-pgepeak_fplesrev1
RNCHSECO 230.00 -BELLOTA 230.00 #1
sac-gb2.drw
t.wrk
Rating = 2

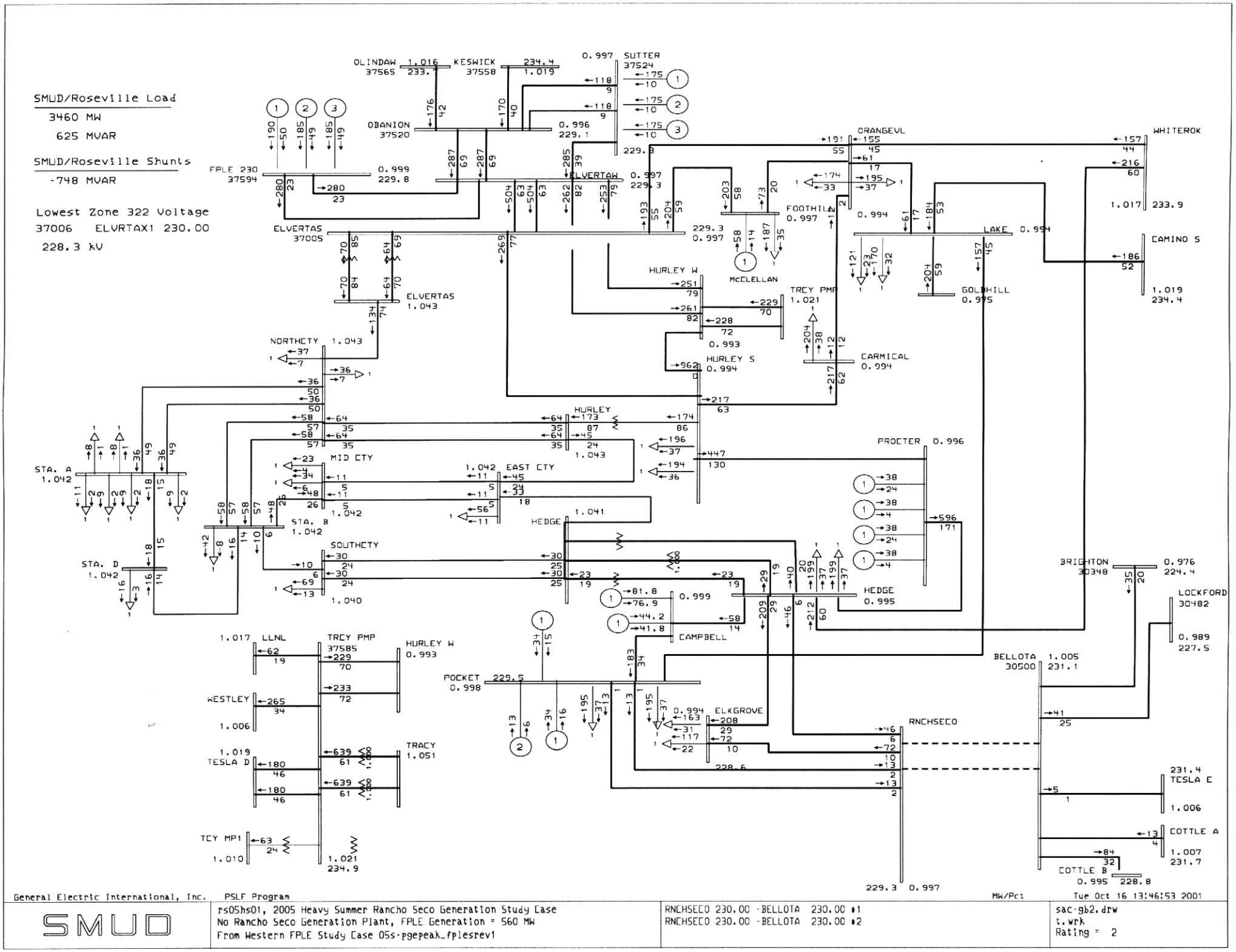
SMUD/Roseville Load
3460 MW
625 MVAR
SMUD/Roseville Shunts
-748 MVAR
Lowest Zone 322 Voltage
37006 ELVRTAX1 230.00
228.3 kV
OLINDAW 1.016 233.7
KESWICK 37558 234.4 1.019
SUTTER 37524 0.997
OBANION 37520 0.996 229.1
FPLE 230 37594 0.999 229.8
ELVERTAW 0.997 229.3
ELVERTAS 37005 229.3 0.997
ELVERTAS 1.043
NORTHCTY 1.043
HURLEY W
HURLEY S 0.994
HURLEY
McCLELLAN
TRCY PMP 1.021
FOOTHILL 0.997
ORANGEVL
WHITEROK
LAKE 0.994
GOLDHILL 0.975
CAMINO S
CARMICAL 0.994
PROCTER 0.996
STA. A 1.042
STA. B 1.042
STA. D 1.042
MID CTY
EAST CTY 1.042
SOUTHCTY 1.040
HEDGE 1.041
HEDGE 0.995
CAMPBELL 0.999
BRIGHTON 30348 0.976 224.4
LOCKFORD 30482 0.989 227.5
BELLOTA 30500 1.005 231.1
RNCHSECO 229.3 0.997
ELKGROVE 0.994 228.6
POCKET 0.998 229.5
LLNL 1.017
TRCY PMP 37585
HURLEY W 0.993
WESTLEY 1.006
TRACY 1.051
TESLA D 1.019
TCY MP1 1.010 1.021 234.9
TESLA E 231.4 1.006
COTTLE A 1.007 231.7
COTTLE B 0.995 228.8
General Electric International, Inc. PSLF Program
MW/Pct
Tue Oct 16 13:46:53 2001
SMUD
rs05hs01, 2005 Heavy Summer Rancho Seco Generation Study Case
No Rancho Seco Generation Plant, FPLE Generation = 560 MW
From Western FPLE Study Case 05s-pgepeak_fplesrev1
RNCHSECO 230.00 -BELLOTA 230.00 #1
RNCHSECO 230.00 -BELLOTA 230.00 #2
sac-gb2.drw
t.wrk
Rating = 2

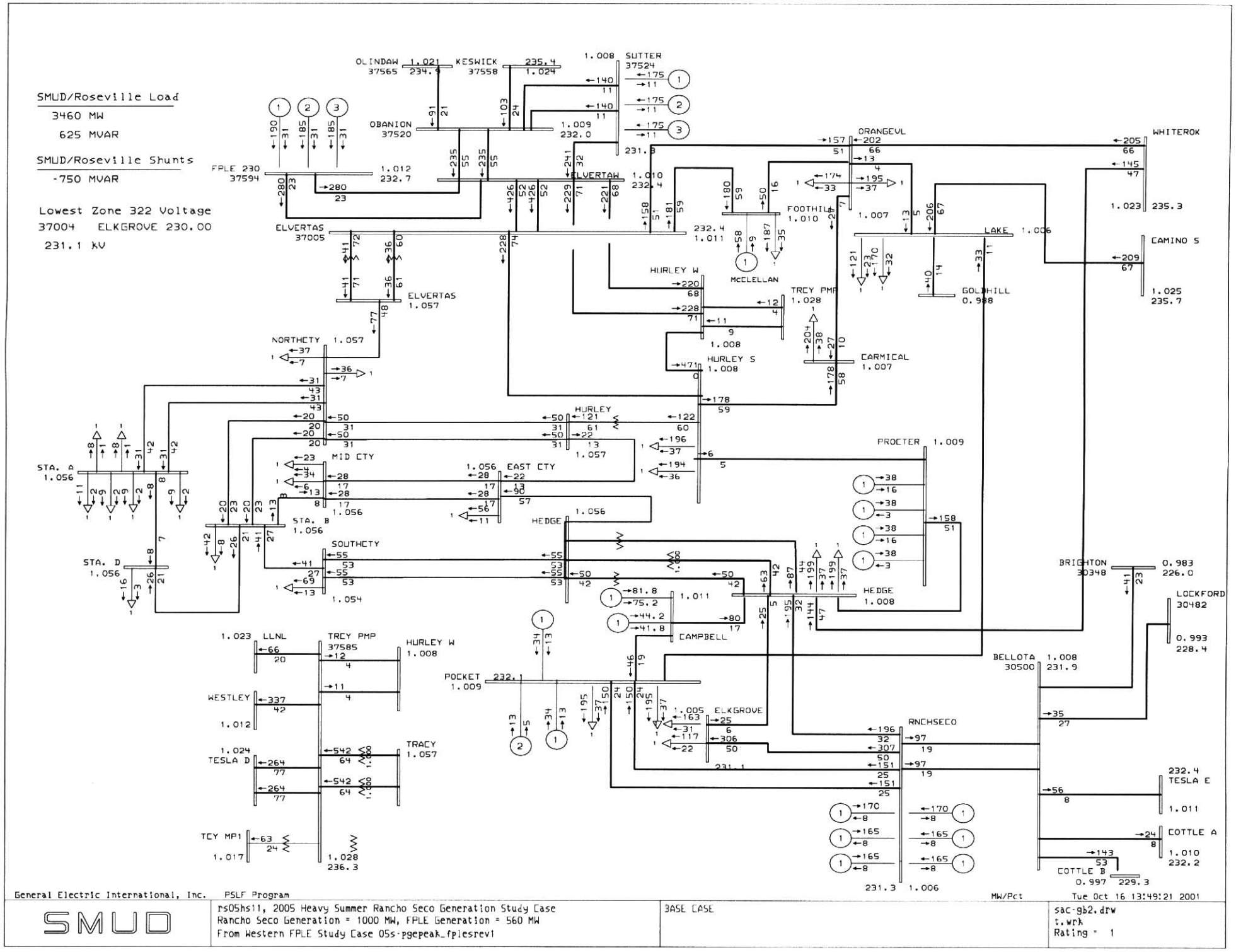
SMUD/Roseville Load
3460 MW
625 MVAR
SMUD/Roseville Shunts
-750 MVAR
Lowest Zone 322 Voltage
37004 ELKGROVE 230.00
231.1 kV
OLINDAW 37565
KESWICK 37558
SUTTER 37524
OBANION 37520
FPLE 230 37594
ELVERTAW
ELVERTAS 37005
ELVERTAS 1.057
ORANGEVL
WHITEROK
FOOTHILL 1.010
McCLELLAN
LAKE
CAMINO S
HURLEY W
TRCY PMP 1.028
GOLDHILL 0.988
HURLEY S 1.008
CARMICAL 1.007
NORTHCTY 1.057
HURLEY
PROCTER 1.009
STA. A 1.056
MID CTY
EAST CTY
STA. B 1.056
HEDGE 1.056
SOUTHCTY
STA. D 1.056
BRIGHTON 30348
LOCKFORD 30482
HEDGE 1.008
CAMPBELL
LLNL
TRCY PMP 37585
HURLEY W 1.008
POCKET 1.009
BELLOTA 30500 1.008
WESTLEY
TRACY 1.057
TESLA D
ELKGROVE
RNCHSECO
TESLA E
COTTLE A
COTTLE B
TCY MP1 1.017
General Electric International, Inc. PSLF Program
MW/Pct
Tue Oct 16 13:49:21 2001
SMUD
rs05hs11, 2005 Heavy Summer Rancho Seco Generation Study Case
Rancho Seco Generation = 1000 MW, FPLE Generation = 560 MW
From Western FPLE Study Case 05s-pgepeak_fplesrev1
BASE CASE
sac-gb2.drw
t.wrk
Rating = 1

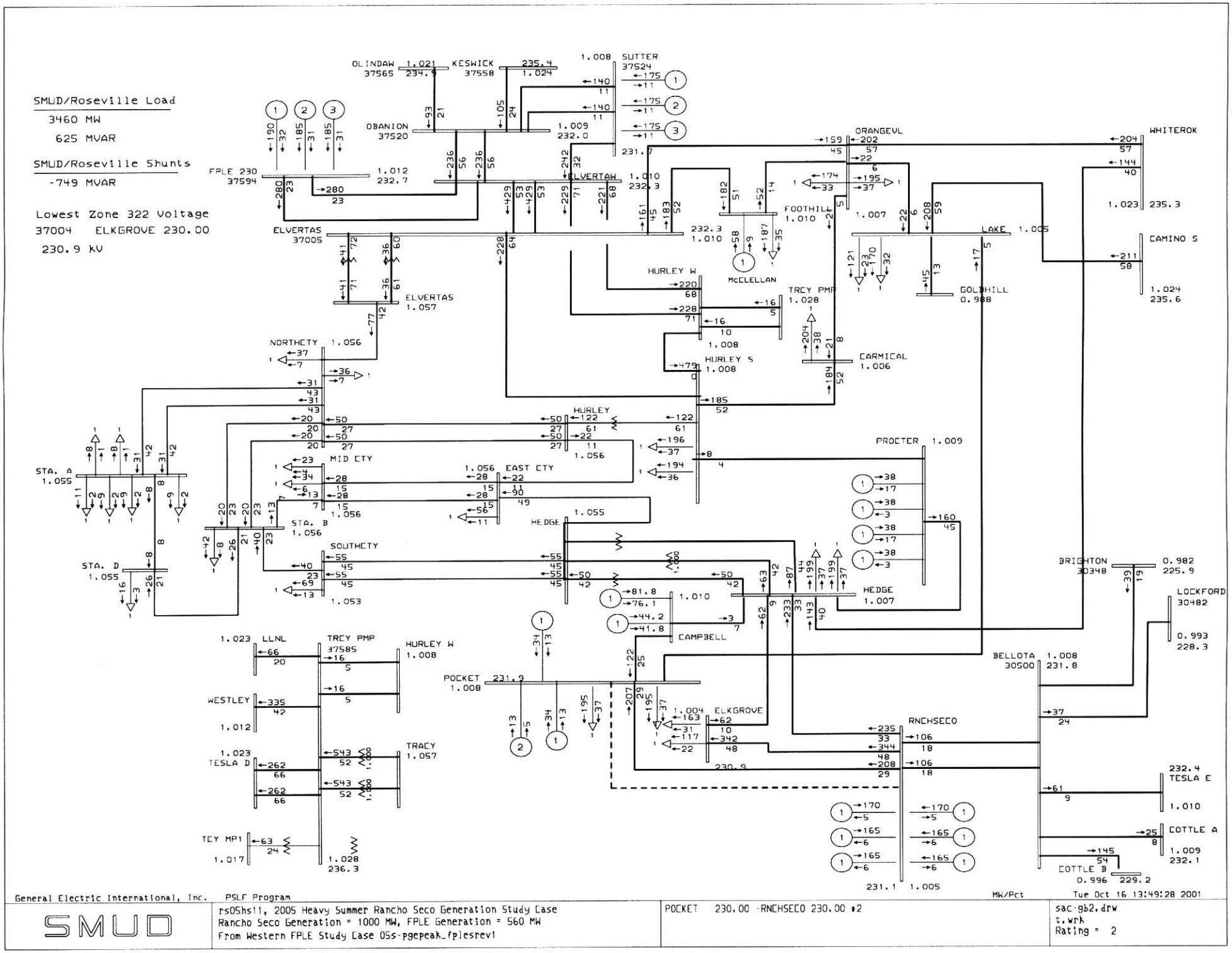
SMUD/Roseville Load
3460 MW
625 MVAR
SMUD/Roseville Shunts
-749 MVAR
Lowest Zone 322 Voltage
37004 ELKGROVE 230.00
230.9 kV
OLINDAW 37565
KESWICK 37558
SUTTER 37524
OBANION 37520
FPLE 230 37594
ELVERTAW
ELVERTAS 37005
ELVERTAS 1.057
NORTHCTY
HURLEY W
McCLELLAN
FOOTHILL
ORANGEVL
WHITEROK
LAKE
CAMINO 5
GOLDHILL
TRCY PMP 1.028
CARMICAL 1.006
HURLEY S 1.008
HURLEY
PROCTER 1.009
STA. A 1.055
MID CTY
EAST CTY
STA. B 1.056
HEDGE
STA. D 1.055
SOUTHCTY
BRIGHTON 30348
LOCKFORD 30482
HEDGE 1.007
CAMPBELL
LLNL
TRCY PMP 37585
HURLEY W 1.008
POCKET 231.9 1.008
WESTLEY
TESLA D
TRACY 1.057
TCY MP1
ELKGROVE
RNCHSECO
BELLOTA 30500 1.008 231.8
TESLA E
COTTLE A
COTTLE B
General Electric International, Inc. PSLF Program
SMUD
rs05hs11, 2005 Heavy Summer Rancho Seco Generation Study Case
Rancho Seco Generation = 1000 MW, FPLE Generation = 560 MW
From Western FPLE Study Case 05s-pgepeak_fplesrev1
POCKET 230.00 -RNCHSECO 230.00 #2
sac-gb2.drw
t.wrk
Rating = 2
MW/Pct
Tue Oct 16 13:49:28 2001

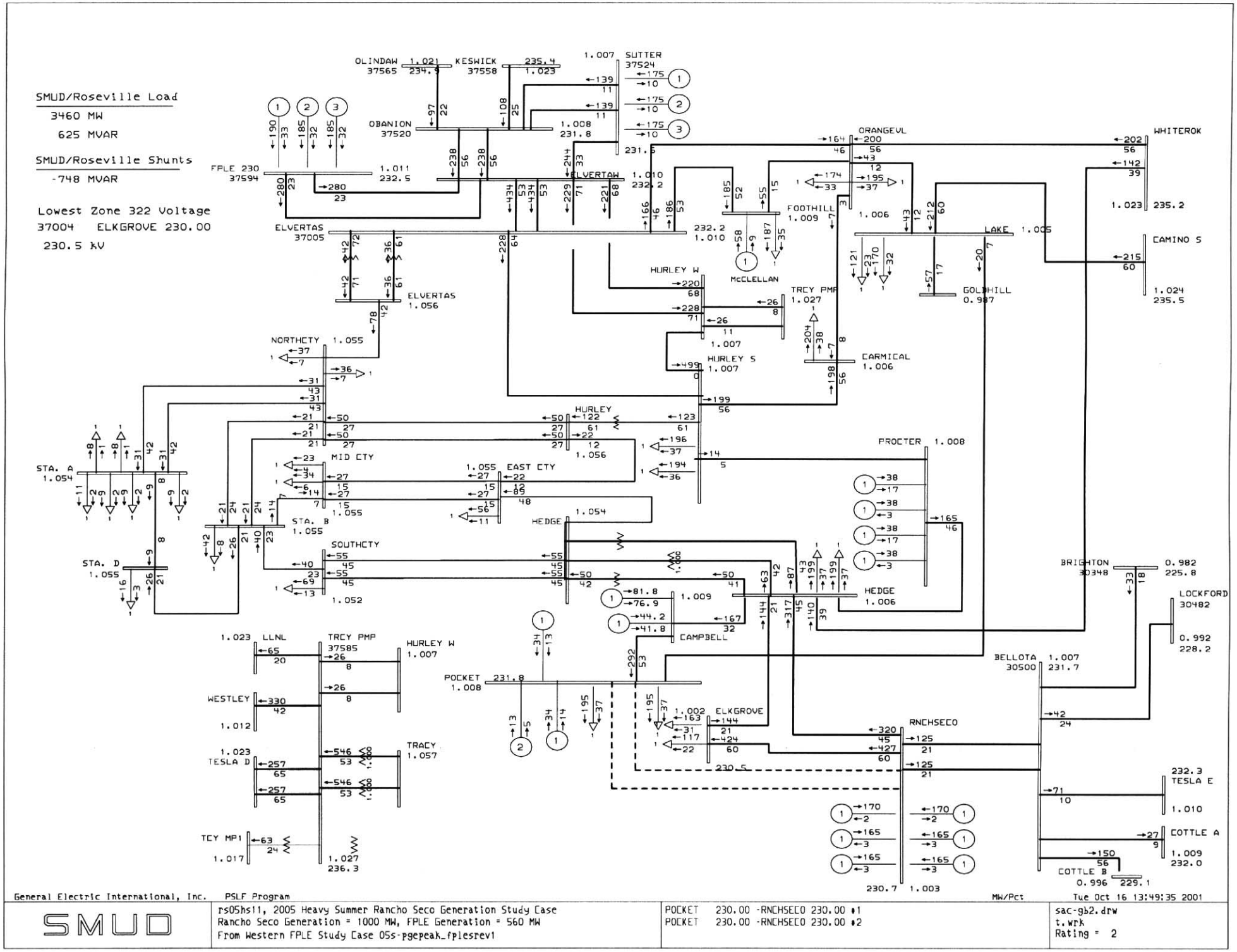
SMUD/Roseville Load
3460 MW
625 MVAR
SMUD/Roseville Shunts
-748 MVAR
Lowest Zone 322 Voltage
37004 ELKGROVE 230.00
230.5 kV
OLINDAW 37565
KESWICK 37558
SUTTER 37524
OBANION 37520
FPLE 230 37594
ELVERTAW
ELVERTAS 37005
ELVERTAS 1.056
ORANGEVL
WHITEROK
FOOTHILL 1.009
McCLELLAN
LAKE 1.005
CAMINO S
GOLDHILL 0.987
HURLEY W
TRCY PMP 1.027
CARMICAL 1.006
HURLEY S 1.007
NORTHCTY 1.055
HURLEY
MID CTY
EAST CTY
STA. A 1.054
STA. B 1.055
STA. D 1.055
SOUTHCTY
HEDGE
PROCTER 1.008
HEDGE 1.006
BRIGHTON 30348
LOCKFORD 30482
CAMPBELL
POCKET 1.008
ELKGROVE
RNCHSECO
BELLOTA 30500
LLNL
TRCY PMP 37585
HURLEY W 1.007
WESTLEY
TESLA D
TRACY 1.057
TCY MP1
TESLA E
COTTLE A
COTTLE B
General Electric International, Inc. PSLF Program
MW/Pct
Tue Oct 16 13:49:35 2001
SMUD
rs05hs11, 2005 Heavy Summer Rancho Seco Generation Study Case
Rancho Seco Generation = 1000 MW, FPLE Generation = 560 MW
From Western FPLE Study Case 05s-pgepeak_fplesrev1
POCKET 230.00 -RNCHSECO 230.00 #1
POCKET 230.00 -RNCHSECO 230.00 #2
sac-gb2.drw
t.wrk
Rating = 2

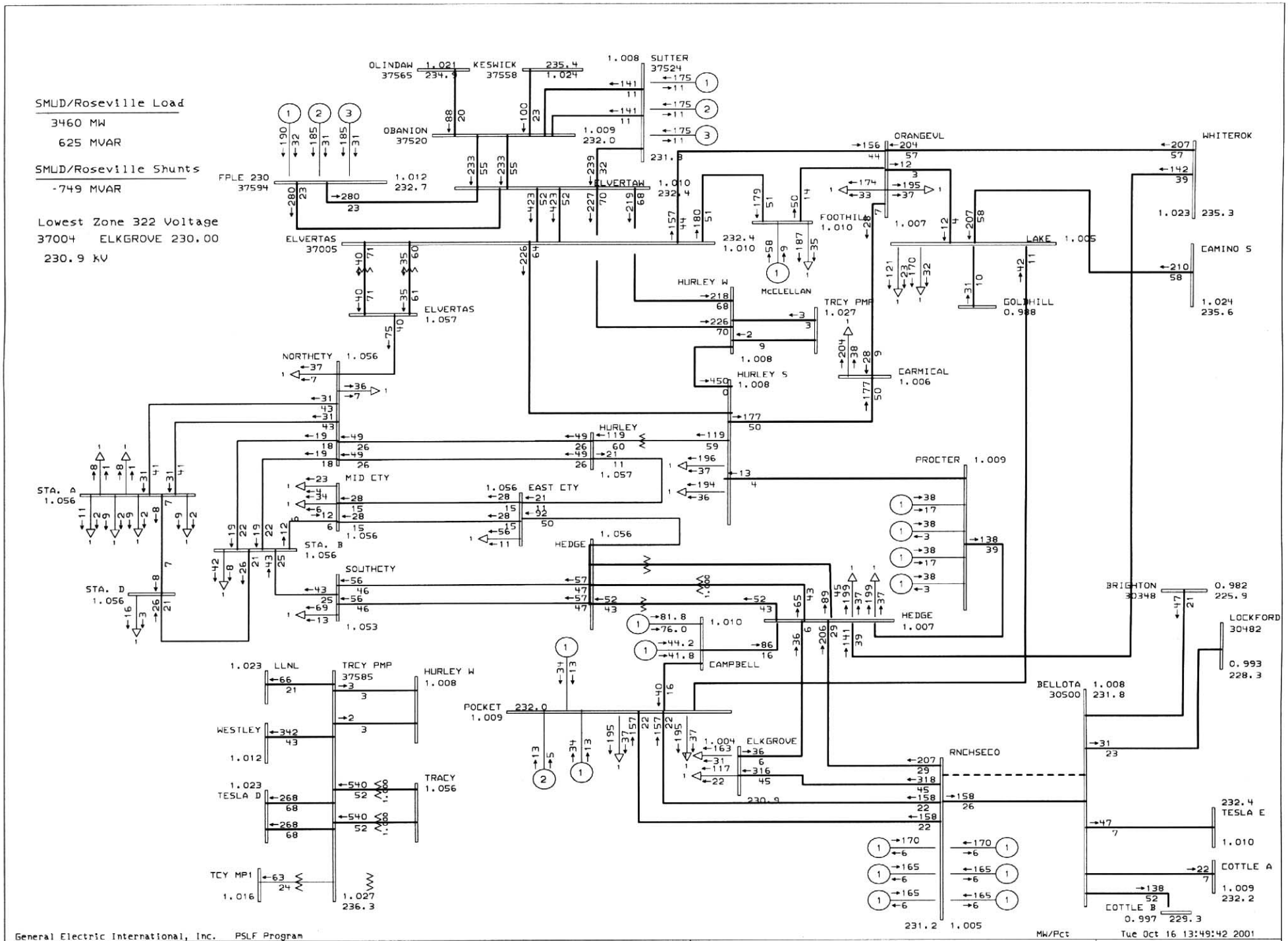
SMUD/Roseville Load
3460 MW
625 MVAR
SMUD/Roseville Shunts
-749 MVAR
Lowest Zone 322 Voltage
37004 ELKGROVE 230.00
230.9 kV
OLINDAW 37565
KESWICK 37558
SUTTER 37524
OBANION 37520
FPLE 230 37594
ELVERTAW
ORANGEVL
WHITEROK
FOOTHILL
LAKE
CAMINO S
ELVERTAS 37005
ELVERTAS 1.057
McCLELLAN
HURLEY W
TRCY PMP 1.027
GOLDHILL 0.988
NORTHCTY
HURLEY S
CARMICAL 1.006
HURLEY
PROCTER 1.009
STA. A 1.056
MID CTY
EAST CTY
STA. B 1.056
HEDGE
STA. D 1.056
SOUTHCTY
HEDGE 1.007
BRIGHTON 30348
LOCKFORD 30482
CAMPBELL
LLNL
TRCY PMP 37585
HURLEY W 1.008
POCKET 1.009
BELLOTA 30500
WESTLEY
ELKGROVE
RNCHSECO
TESLA D
TRACY 1.056
TESLA E
TCY MP1
COTTLE A
COTTLE B
General Electric International, Inc. PSLF Program
MW/Pct
Tue Oct 16 13:49:42 2001
SMUD
rs05hs11, 2005 Heavy Summer Rancho Seco Generation Study Case
Rancho Seco Generation = 1000 MW, FPLE Generation = 560 MW
From Western FPLE Study Case 05s-pgepeak_fplesrev1
RNCHSECO 230.00 -BELLOTA 230.00 #1
sac-gb2.drw
t.wrk
Rating = 2

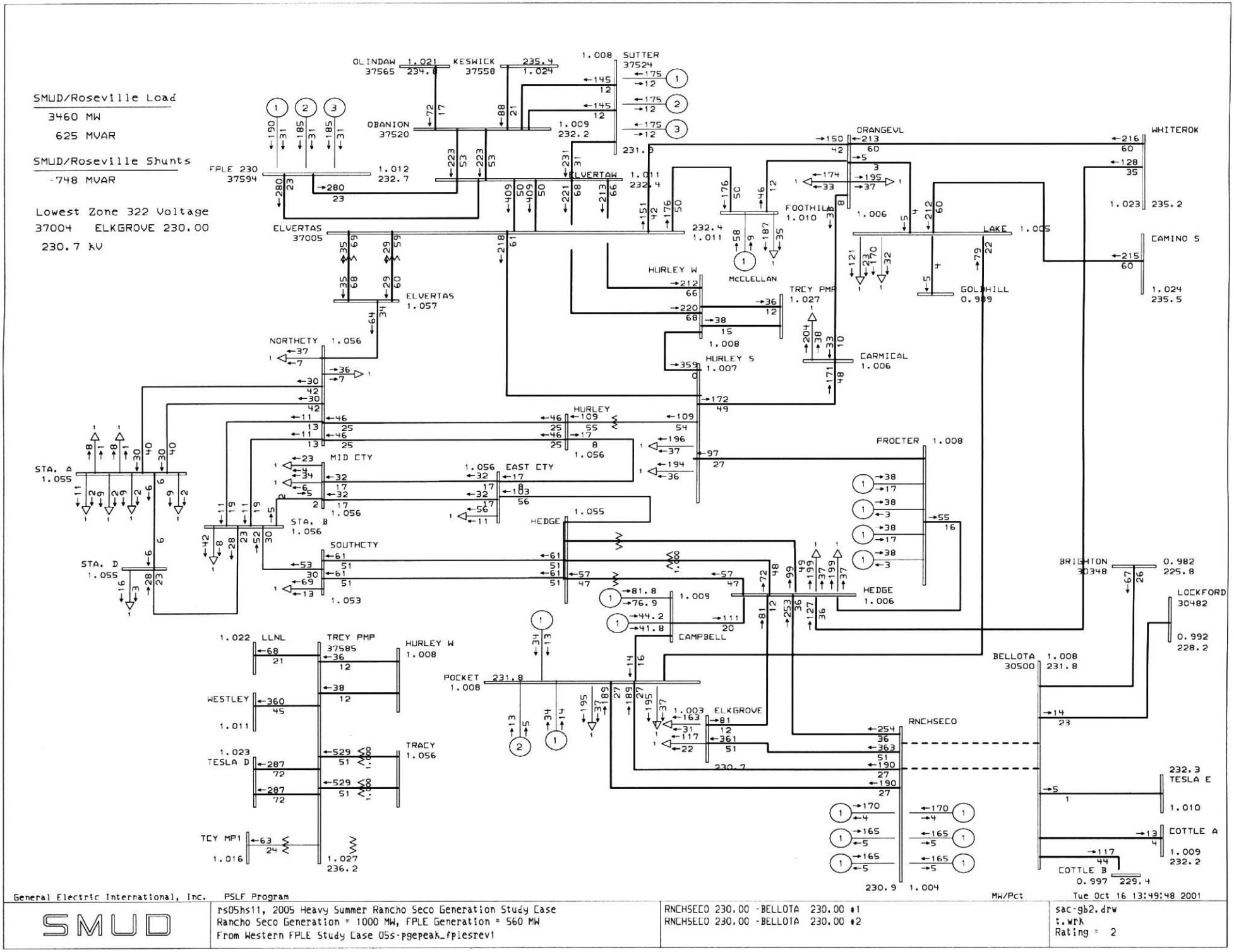
SMUD/Roseville Load
3460 MW
625 MVAR
SMUD/Roseville Shunts
-748 MVAR
Lowest Zone 322 Voltage
37004 ELKGROVE 230.00
230.7 kV
OLINDAW 37565
KESWICK 37558
SUTTER 37524
OBANION 37520
FPLE 230 37594
ELVERTAW
ELVERTAS 37005
ELVERTAS 1.057
ORANGEVL
WHITEROK
FOOTHILL 1.010
LAKE
CAMINO 5
McCLELLAN
HURLEY W
TRCY PMP 1.027
GOLDHILL 0.989
HURLEY S 1.007
CARMICAL 1.006
NORTHCTY
HURLEY
PROCTER 1.008
STA. A 1.055
MID CTY
EAST CTY
STA. B 1.056
HEDGE
STA. D 1.055
SOUTHCTY
BRIGHTON 30348
LOCKFORD 30482
HEDGE 1.006
CAMPBELL
LLNL
TRCY PMP 37585
HURLEY W 1.008
BELLOTA 30500
POCKET 1.008
WESTLEY
ELKGROVE
RNCHSECO
TRACY 1.056
TESLA D
TESLA E
TCY MP1
COTTLE A
COTTLE B
General Electric International, Inc. PSLF Program
MW/Pct
Tue Oct 16 13:49:48 2001
SMUD
rs05hs11, 2005 Heavy Summer Rancho Seco Generation Study Case
Rancho Seco Generation = 1000 MW, FPLE Generation = 560 MW
From Western FPLE Study Case 05s-pgepeak_fplesrev1
RNCHSECO 230.00 -BELLOTA 230.00 #1
RNCHSECO 230.00 -BELLOTA 230.00 #2
sac-gb2.drw
t.wrk
Rating = 2

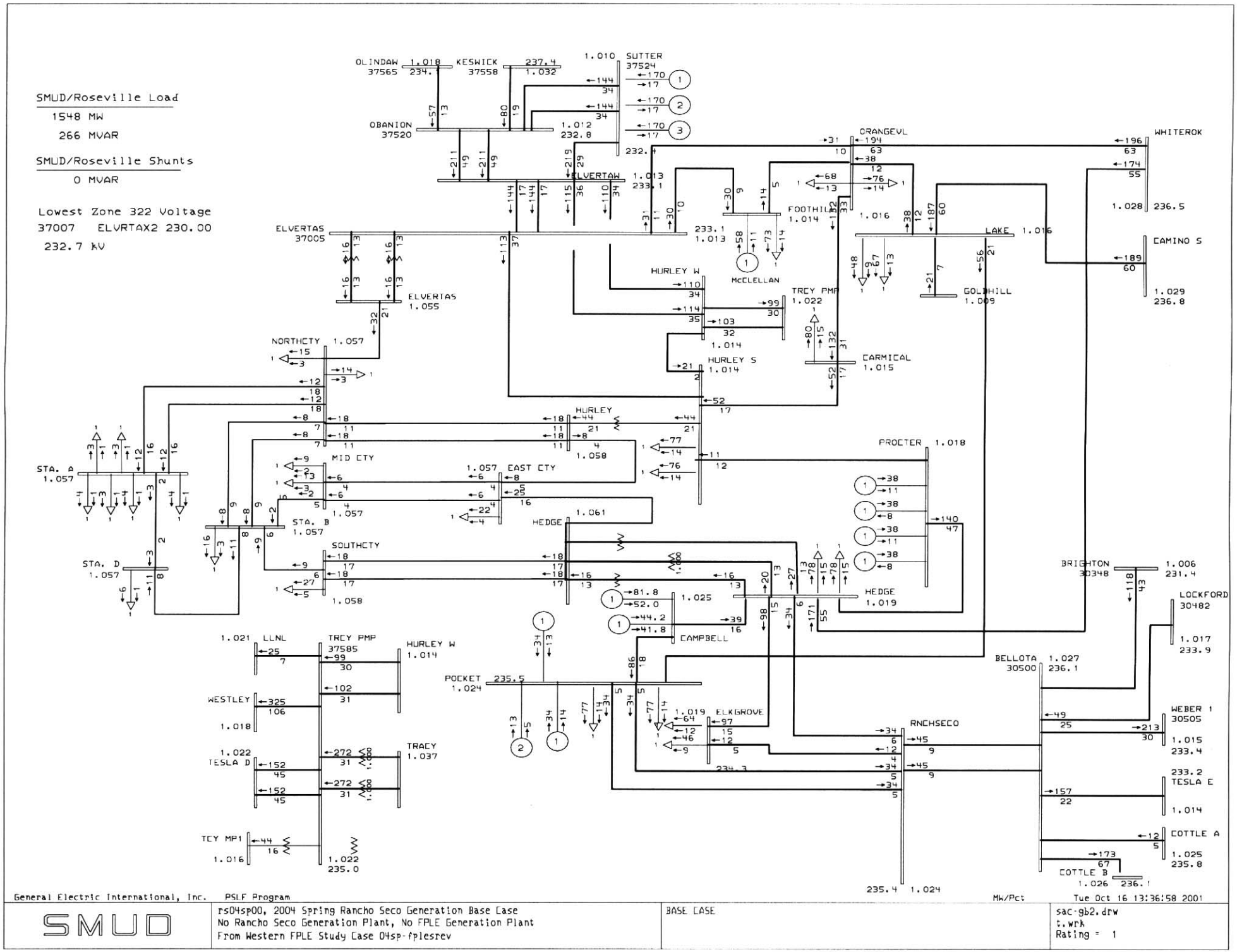
SMUD/Roseville Load
1548 MW
266 MVAR
SMUD/Roseville Shunts
0 MVAR
Lowest Zone 322 Voltage
37007 ELVRTAX2 230.00
232.7 kV
OLINDAW 37565
KESWICK 37558
SUTTER 37524
OBANION 37520
ELVERTAW
ELVERTAS 37005
ELVERTAS 1.055
NORTHCTY 1.057
HURLEY W
McCLELLAN
TRCY PMP 1.022
HURLEY S 1.014
CARMICAL 1.015
ORANGEVL
FOOTHILL 1.014
LAKE 1.016
GOLDHILL 1.009
WHITEROK
CAMINO S
HURLEY
MID CTY
EAST CTY
STA. A 1.057
STA. B 1.057
STA. D 1.057
SOUTHCTY
HEDGE 1.061
PROCTER 1.018
HEDGE 1.019
CAMPBELL
BRIGHTON 30348
LOCKFORD 30482
BELLOTA 30500
WEBER 1 30505
TESLA E
COTTLE A
COTTLE B
RNCHSECO
ELKGROVE
POCKET 1.024
LLNL
TRCY PMP 37585
HURLEY W 1.014
WESTLEY
TESLA D
TRACY 1.037
TCY MP1
General Electric International, Inc. PSLF Program
MW/Pct
Tue Oct 16 13:36:58 2001
SMUD
rs04sp00, 2004 Spring Rancho Seco Generation Base Case
No Rancho Seco Generation Plant, No FPLE Generation Plant
From Western FPLE Study Case 04sp-fplesrev
BASE CASE
sac-gb2.drw
t.wrk
Rating = 1

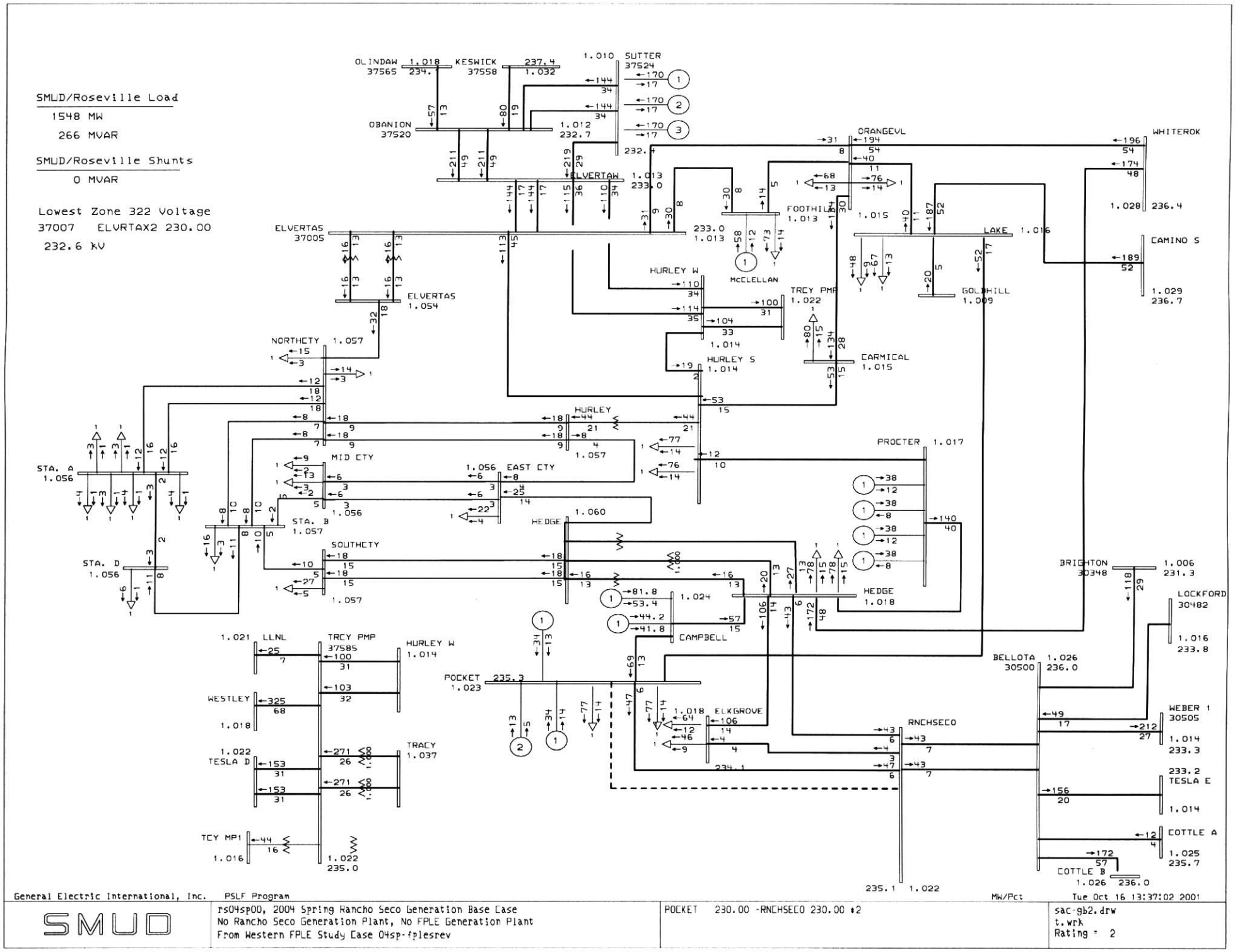
SMUD/Roseville Load
1548 MW
266 MVAR
SMUD/Roseville Shunts
0 MVAR
Lowest Zone 322 Voltage
37007 ELVRTAX2 230.00
232.6 kV
OLINDAW 37565
KESWICK 37558
SUTTER 37524
OBANION 37520
ELVERTAW
ELVERTAS 37005
ELVERTAS 1.054
ORANGEVL
WHITEROK
FOOTHILL 1.013
LAKE 1.016
CAMINO S
McCLELLAN
HURLEY W
TRCY PMP 1.022
GOLDHILL 1.009
NORTHCTY 1.057
HURLEY S 1.014
CARMICAL 1.015
HURLEY
PROCTER 1.017
STA. A 1.056
MID CTY
EAST CTY
STA. B 1.057
HEDGE 1.060
STA. D 1.056
SOUTHCTY
HEDGE 1.018
BRIGHTON 30348
LOCKFORD 30482
CAMPBELL
LLNL
TRCY PMP 37585
HURLEY W 1.014
POCKET 235.3 1.023
BELLOTA 30500 1.026 236.0
WESTLEY
ELKGROVE
RNCHSECO
WEBER 1 30505
TRACY 1.037
TESLA D
TESLA E
TCY MP1
COTTLE A
COTTLE B
General Electric International, Inc. PSLF Program
MW/Pct
Tue Oct 16 13:37:02 2001
SMUD
rs04sp00, 2004 Spring Rancho Seco Generation Base Case
No Rancho Seco Generation Plant, No FPLE Generation Plant
From Western FPLE Study Case 04sp-fplesrev
POCKET 230.00 -RNCHSECO 230.00 #2
sac-gb2.drw
t.wrk
Rating = 2

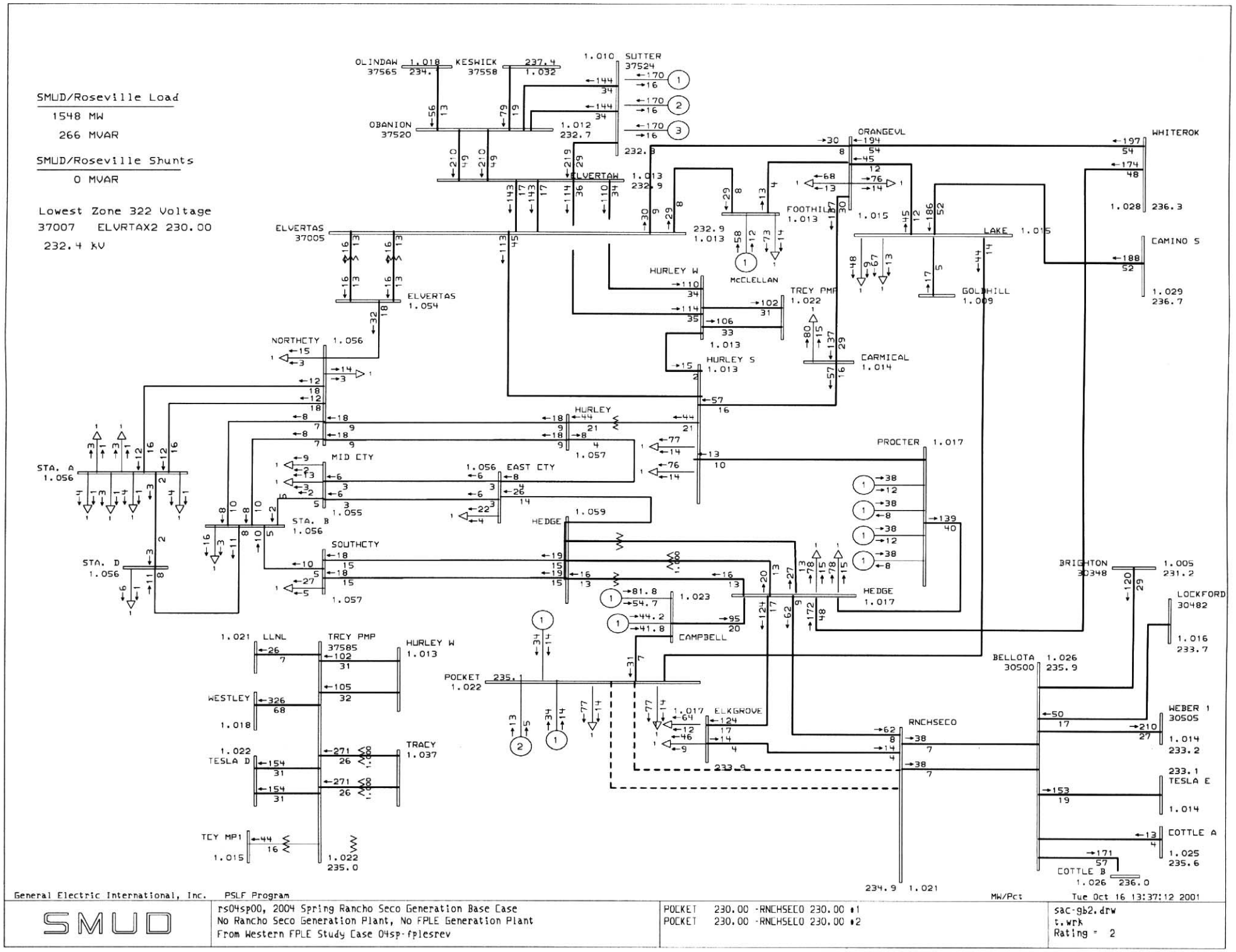
SMUD/Roseville Load
1548 MW
266 MVAR
SMUD/Roseville Shunts
0 MVAR
Lowest Zone 322 Voltage
37007 ELVRTAX2 230.00
232.4 kV
OLINDAW 1.018 234.
37565
KESWICK 237.4 1.032
37558
1.010 SUTTER
37524
OBANION
37520
1.012 232.7
ELVERTAW 1.013 232.9
ORANGEVL
WHITEROK
1.028 236.3
FOOTHILL 1.013
1.015
LAKE 1.015
CAMINO S
1.029 236.7
ELVERTAS
37005
ELVERTAS 1.054
HURLEY W
McCLELLAN
TRCY PMP 1.022
GOLDHILL 1.009
NORTHCTY 1.056
HURLEY S 1.013
CARMICAL 1.014
HURLEY
1.057
PROCTER 1.017
STA. A 1.056
MID CTY
1.056 EAST CTY
1.055
STA. B 1.056
HEDGE 1.059
SOUTHCTY
STA. D 1.056
1.057
1.023
HEDGE 1.017
BRIGHTON 30348
1.005 231.2
LOCKFORD 30482
1.016 233.7
CAMPBELL
1.021 LLNL
TRCY PMP 37585
HURLEY W 1.013
POCKET 235. 1.022
BELLOTA 30500 1.026 235.9
WESTLEY 1.018
1.017 ELKGROVE
RNCHSECO
WEBER 1 30505
1.014 233.2
1.022 TESLA D
TRACY 1.037
233.9
233.1 TESLA E
1.014
TCY MP1 1.015
1.022 235.0
COTTLE A
1.025 235.6
COTTLE B 1.026 236.0
234.9 1.021
General Electric International, Inc. PSLF Program
MW/Pct
Tue Oct 16 13:37:12 2001
SMUD
rs04sp00, 2004 Spring Rancho Seco Generation Base Case
No Rancho Seco Generation Plant, No FPLE Generation Plant
From Western FPLE Study Case 04sp-fplesrev
POCKET 230.00 -RNCHSECO 230.00 #1
POCKET 230.00 -RNCHSECO 230.00 #2
sac-gb2.drw
t.wrk
Rating = 2

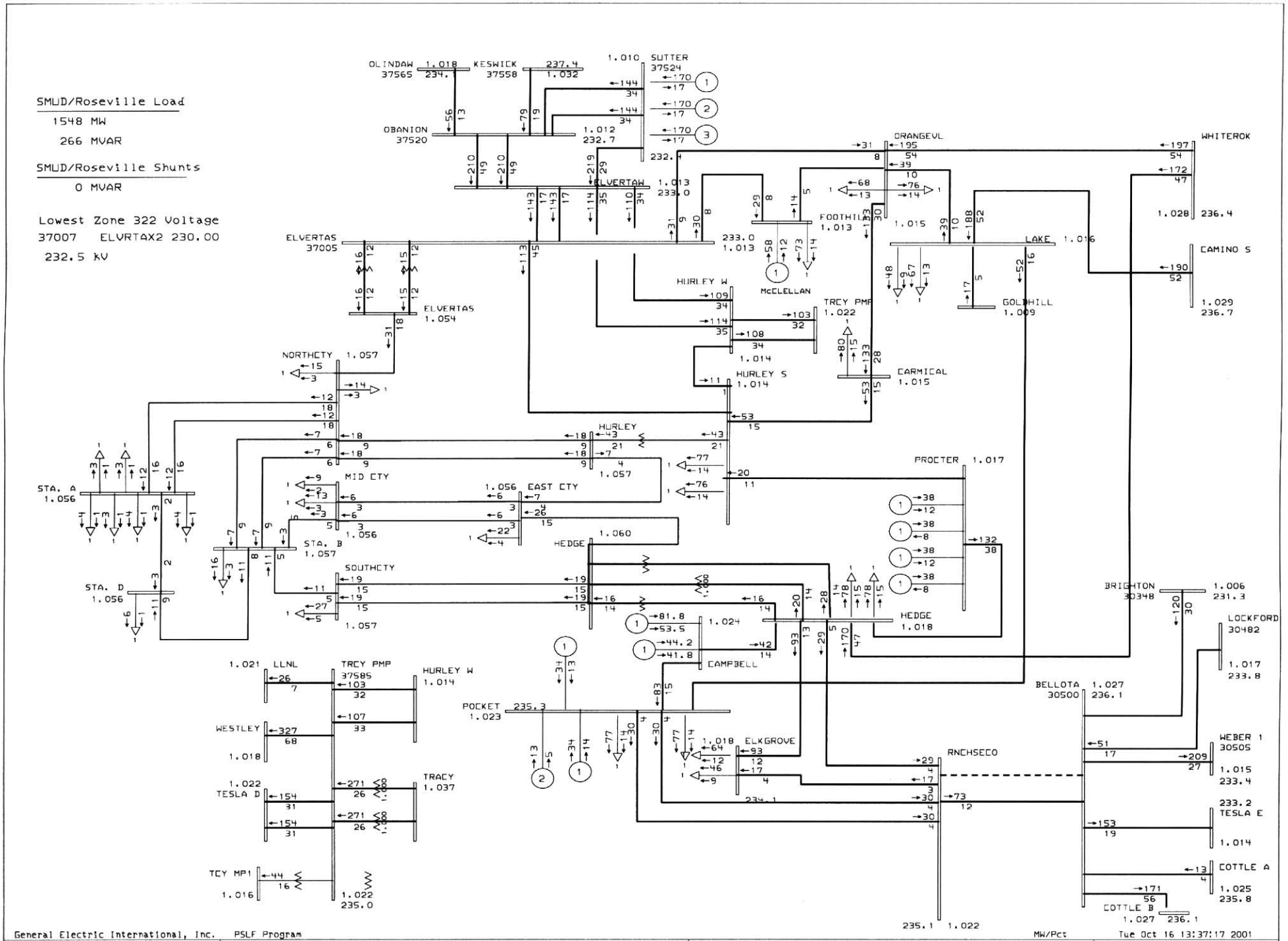
SMUD/Roseville Load
1548 MW
266 MVAR
SMUD/Roseville Shunts
0 MVAR
Lowest Zone 322 Voltage
37007 ELVRTAX2 230.00
232.5 kV
OLINDAW 37565
KESWICK 37558
SUTTER 37524
OBANION 37520
ELVERTAW
ELVERTAS 37005
ELVERTAS 1.054
NORTHCTY 1.057
STA. A 1.056
STA. B 1.057
STA. D 1.056
MID CTY
EAST CTY
SOUTHCTY
HURLEY
HURLEY W
HURLEY S
McCLELLAN
TRCY PMP 1.022
CARMICAL 1.015
FOOTHILL 1.013
ORANGEVL
LAKE 1.016
GOLDHILL 1.009
WHITEROK
CAMINO S
PROCTER 1.017
HEDGE 1.060
HEDGE 1.018
CAMPBELL
POCKET 1.023
ELKGROVE
RNCHSECO
BRIGHTON 30348
LOCKFORD 30482
BELLOTA 30500
WEBER 1 30505
TESLA E
COTTLE A
COTTLE B
LLNL
TRCY PMP 37585
WESTLEY
TESLA D
TRACY 1.037
TCY MP1
General Electric International, Inc.
PSLF Program
MW/Pct
Tue Oct 16 13:37:17 2001
SMUD
rs04sp00, 2004 Spring Rancho Seco Generation Base Case
No Rancho Seco Generation Plant, No FPLE Generation Plant
From Western FPLE Study Case 04sp-fplesrev
RNCHSECO 230.00 -BELLOTA 230.00 #1
sac-gb2.drw
t.wrk
Rating = 2

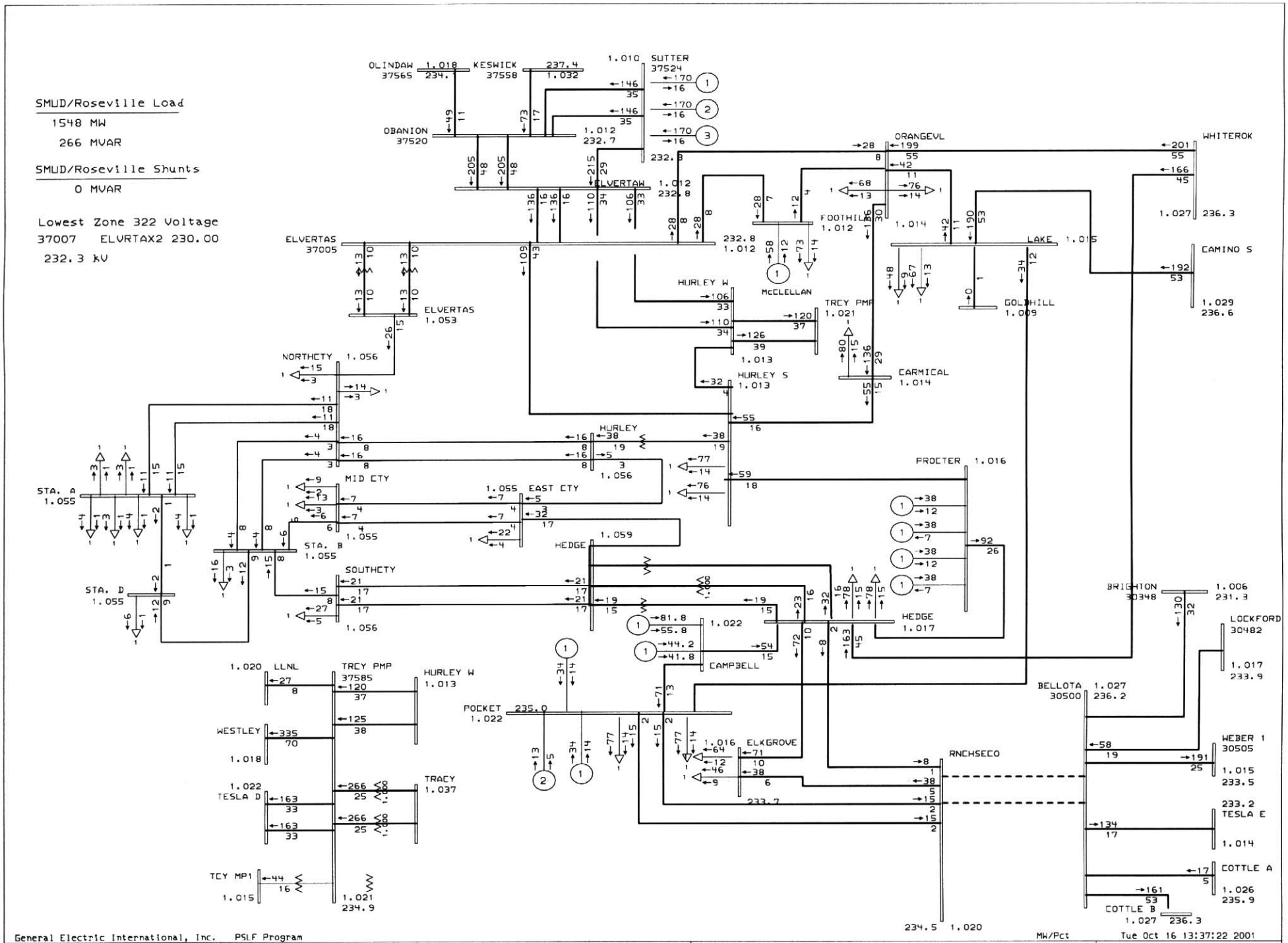
SMUD/Roseville Load
1548 MW
266 MVAR
SMUD/Roseville Shunts
0 MVAR
Lowest Zone 322 Voltage
37007 ELVRTAX2 230.00
232.3 kV
OLINDAW 37565
KESWICK 37558
SUTTER 37524
OBANION 37520
ELVERTAW
ELVERTAS 37005
ELVERTAS 1.053
NORTHCTY
HURLEY W
HURLEY S
HURLEY
McCLELLAN
TRCY PMP 1.021
FOOTHILL 1.012
ORANGEVL
WHITEROK
LAKE
CAMINO S
GOLDHILL 1.009
CARMICAL 1.014
PROCTER 1.016
STA. A 1.055
STA. B 1.055
STA. D 1.055
MID CTY
EAST CTY
SOUTHCTY
HEDGE
HEDGE 1.017
CAMPBELL
POCKET 235.0
ELKGROVE
RNCHSECO
BRIGHTON 30348
LOCKFORD 30482
BELLOTA 30500
WEBER 1 30505
TESLA E
COTTLE A
COTTLE B
LLNL
TRCY PMP 37585
WESTLEY
TESLA D
TRACY 1.037
TCY MP1
General Electric International, Inc. PSLF Program
MW/Pct
Tue Oct 16 13:37:22 2001
SMUD
rs04sp00, 2004 Spring Rancho Seco Generation Base Case
No Rancho Seco Generation Plant, No FPLE Generation Plant
From Western FPLE Study Case 04sp-fplesrev
RNCHSECO 230.00 -BELLOTA 230.00 #1
RNCHSECO 230.00 -BELLOTA 230.00 #2
sac-gb2.drw
t.wrk
Rating = 2

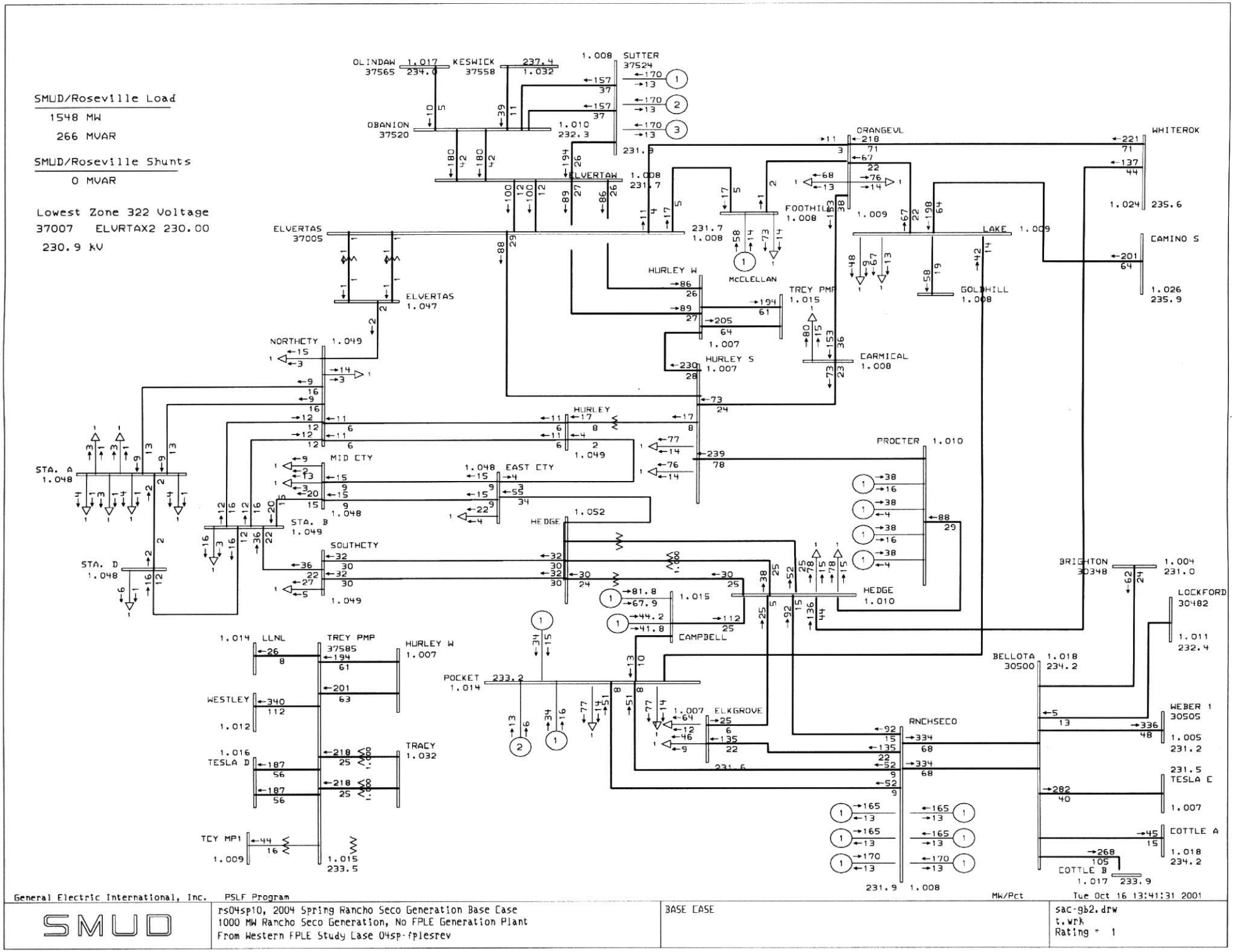
SMUD/Roseville Load
1548 MW
266 MVAR
SMUD/Roseville Shunts
0 MVAR
Lowest Zone 322 Voltage
37007 ELVRTAX2 230.00
230.9 kV
OLINDAW 37565
KESWICK 37558
SUTTER 37524
OBANION 37520
ELVERTAW
ELVERTAS 37005
ELVERTAS 1.047
NORTHCTY
HURLEY W
HURLEY S
HURLEY
MCCLELLAN
TRCY PMP 1.015
CARMICAL 1.008
FOOTHILL 1.008
ORANGEVL
WHITEROK
CAMINO S
LAKE
GOLDHILL 1.008
STA. A 1.048
STA. B 1.049
STA. D 1.048
MID CTY
EAST CTY
SOUTHCTY
HEDGE
PROCTER 1.010
BRIGHTON 30348
LOCKFORD 30482
BELLOTA 30500
WEBER 1 30505
TESLA E
COTTLE A
COTTLE B
RNCHSECO
ELKGROVE
CAMPBELL
POCKET 233.2
LLNL
TRCY PMP 37585
WESTLEY
TESLA D
TRACY 1.032
TCY MP1
General Electric International, Inc.
PSLF Program
MW/Pct
Tue Oct 16 13:41:31 2001
SMUD
rs04sp10, 2004 Spring Rancho Seco Generation Base Case
1000 MW Rancho Seco Generation, No FPLE Generation Plant
From Western FPLE Study Case 04sp-fplesrev
BASE CASE
sac-gb2.drw
t.wrk
Rating = 1

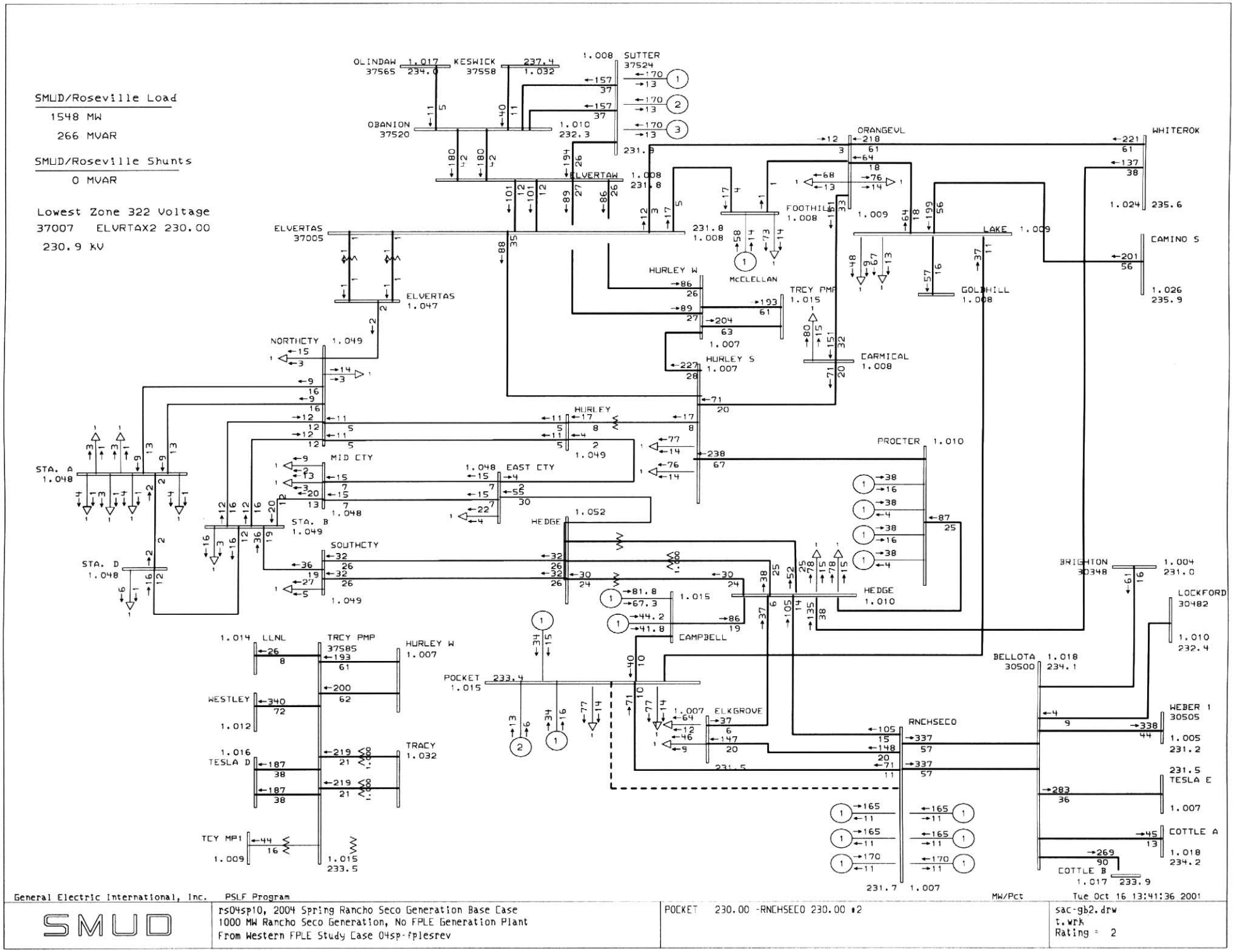
SMUD/Roseville Load
1548 MW
266 MVAR
SMUD/Roseville Shunts
0 MVAR
Lowest Zone 322 Voltage
37007 ELVRTAX2 230.00
230.9 kV
OLINDAW 1.017 234.0
KESWICK 237.4 1.032
SUTTER 37524 1.008
OBANION 37520 1.010 232.3
ELVERTAW 1.008 231.8
ORANGEVL 218 231.8
WHITEROK 1.024 235.6
FOOTHIL 1.008
LAKE 1.009
CAMINO S 1.026 235.9
ELVERTAS 37005 231.8 1.008
ELVERTAS 1.047
McCLELLAN
HURLEY W
TRCY PMP 1.015
GOLDHILL 1.008
NORTHCTY 1.049
HURLEY S 1.007
CARMICAL 1.008
HURLEY
PROCTER 1.010
STA. A 1.048
MID CTY
EAST CTY 1.048
STA. B 1.049
HEDGE 1.052
STA. D 1.048
SOUTHCTY 1.049
BRIGHTON 30348 1.004 231.0
HEDGE 1.010
LOCKFORD 30482 1.010 232.4
1.015
CAMPBELL
1.014 LLNL
TRCY PMP 37585
HURLEY W 1.007
BELLOTA 30500 1.018 234.1
POCKET 233.4 1.015
WESTLEY 1.012
1.007 ELKGROVE
RNCHSECO
WEBER 1 30505 1.005 231.2
1.016 TESLA D
TRACY 1.032
231.5 TESLA E 1.007
TCY MP1 1.009
1.015 233.5
COTTLE A 1.018 234.2
COTTLE B 1.017 233.9
231.7 1.007
General Electric International, Inc. PSLF Program
MW/Pct
Tue Oct 16 13:41:36 2001
SMUD
rs04sp10, 2004 Spring Rancho Seco Generation Base Case
1000 MW Rancho Seco Generation, No FPLE Generation Plant
From Western FPLE Study Case 04sp-fplesrev
POCKET 230.00 -RNCHSECO 230.00 #2
sac-gb2.drw
t.wrk
Rating = 2

SMUD/Roseville Load

1548 MW

266 MVAR

SMUD/Roseville Shunts

0 MVAR

Lowest Zone 322 Voltage

37007 ELVRTAX2 230.00

230.9 kV

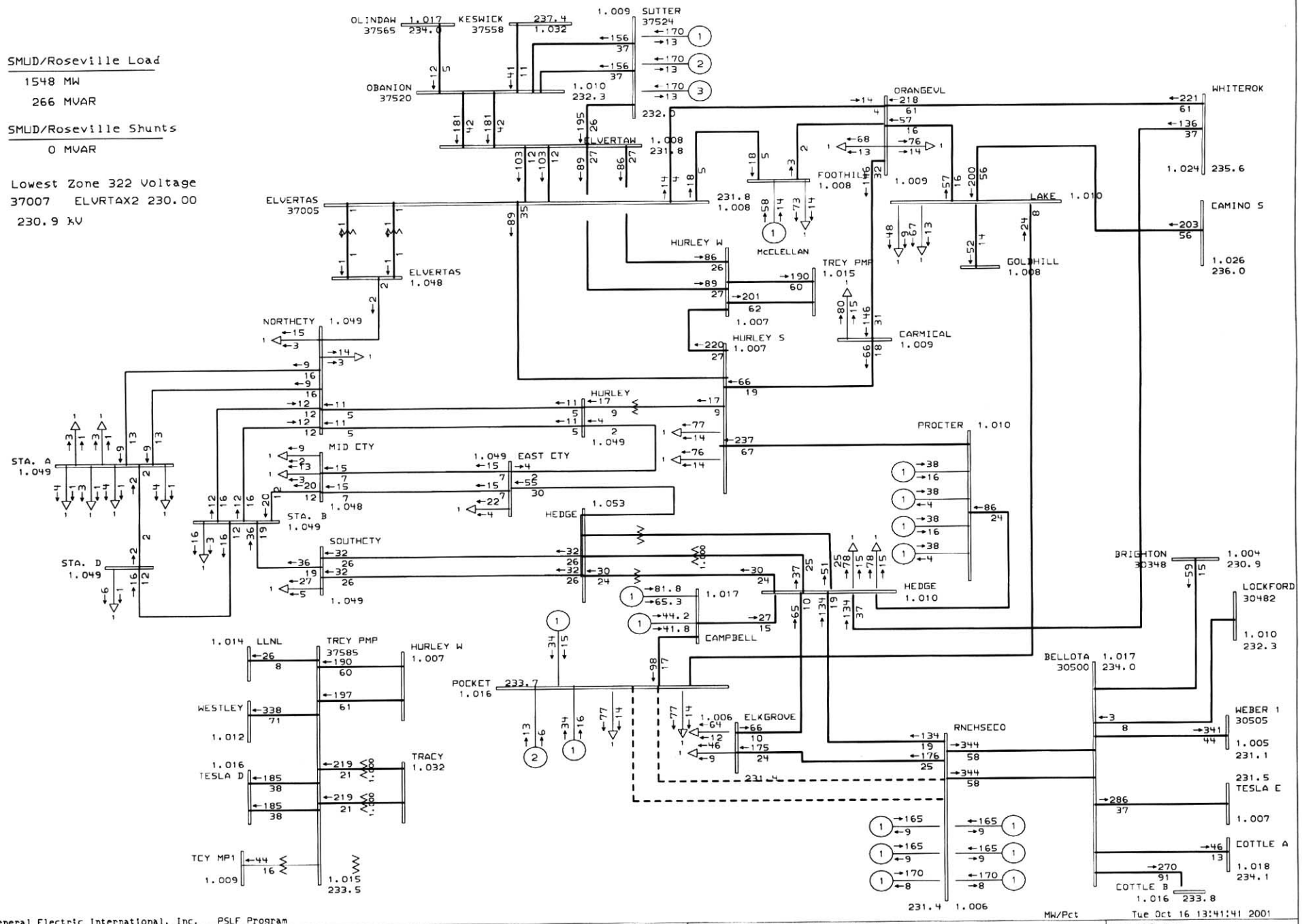

General Electric International, Inc. PSLF Program

SMUD

rs04sp10, 2004 Spring Rancho Seco Generation Base Case
1000 MW Rancho Seco Generation, No FPLE Generation Plant
From Western FPLE Study Case 04sp-fplesrev

POCKET 230.00 -RNCHSECO 230.00 #1
POCKET 230.00 -RNCHSECO 230.00 #2

sac-gb2.drw
t.wrk
Rating = 2

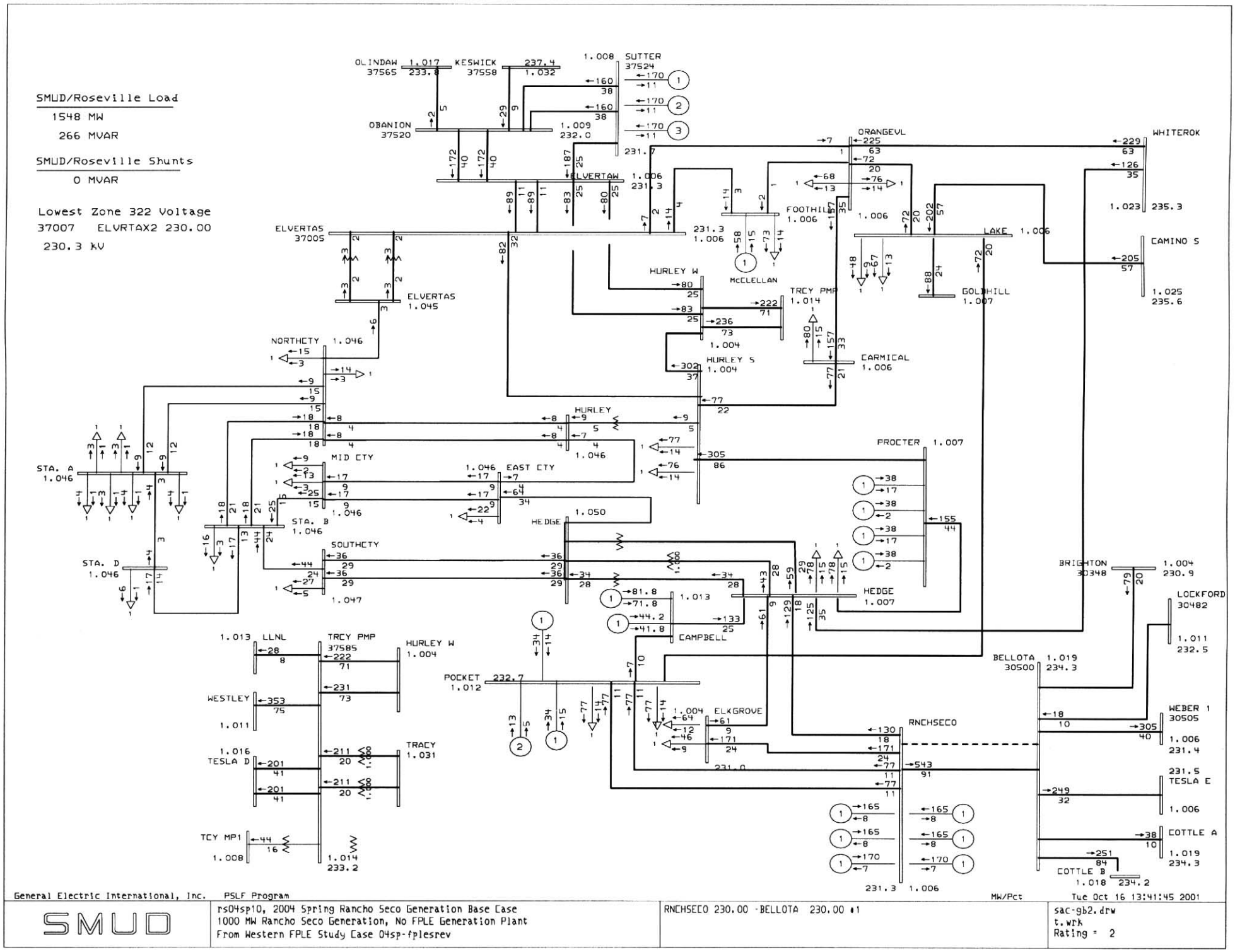
SMUD/Roseville Load
1548 MW
266 MVAR
SMUD/Roseville Shunts
0 MVAR
Lowest Zone 322 Voltage
37007 ELVRTAX2 230.00
230.3 kV
OLINDAW 37565 1.017 233.8
KESWICK 37558 237.4 1.032
1.008 SUTTER 37524
OBANION 37520
1.009 232.0
ELVERTAW 1.006 231.3
ELVERTAS 37005
ELVERTAS 1.045
NORTHCTY 1.046
HURLEY W
McCLELLAN
TRCY PMP 1.014
HURLEY S 1.004
CARMICAL 1.006
FOOTHILL 1.006
ORANGEVL
WHITEROK
LAKE 1.006
GOLDHILL 1.007
CAMINO S
1.023 235.3
1.025 235.6
HURLEY
1.046
PROCTER 1.007
STA. A 1.046
MID CTY
EAST CTY
STA. B 1.046
HEDGE 1.050
STA. D 1.046
SOUTHCTY
1.047
HEDGE 1.007
BRIGHTON 30348 1.004 230.9
LOCKFORD 30482
1.011 232.5
1.013
CAMPBELL
LLNL
TRCY PMP 37585
HURLEY W 1.004
POCKET 1.012 232.7
BELLOTA 30500 1.019 234.3
WESTLEY 1.011
1.004 ELKGROVE
RNCHSECO
WEBER 1 30505
1.006 231.4
1.016 TESLA D
TRACY 1.031
231.5 TESLA E
1.006
TCY MP1 1.008
1.014 233.2
COTTLE A
1.019 234.3
COTTLE B 1.018 234.2
General Electric International, Inc. PSLF Program
MW/Pct
Tue Oct 16 13:41:45 2001
SMUD
rs04sp10, 2004 Spring Rancho Seco Generation Base Case
1000 MW Rancho Seco Generation, No FPLE Generation Plant
From Western FPLE Study Case 04sp-fplesrev
RNCHSECO 230.00 -BELLOTA 230.00 #1
sac-gb2.drw
t.wrk
Rating = 2

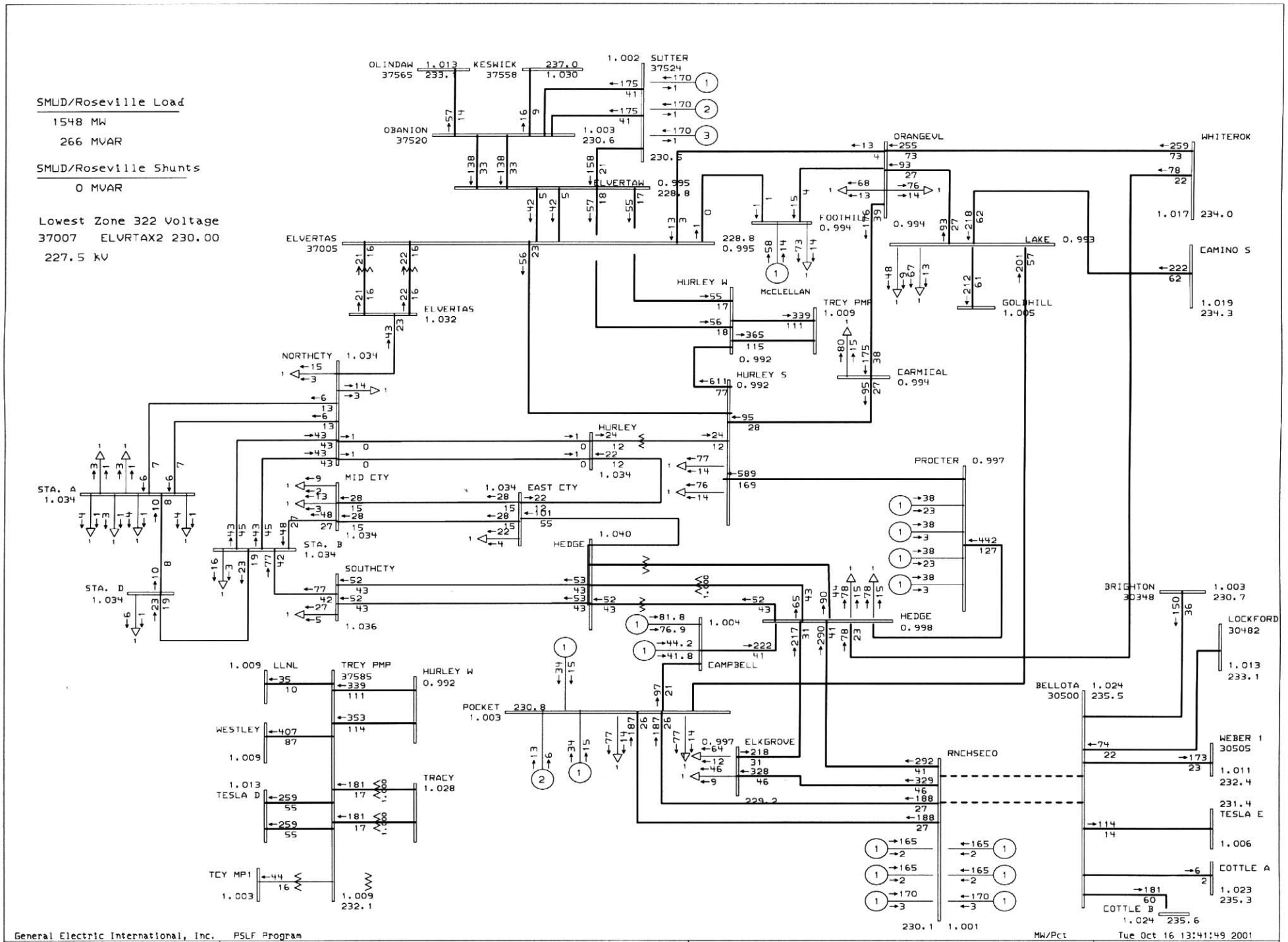
SMUD/Roseville Load
1548 MW
266 MVAR
SMUD/Roseville Shunts
0 MVAR
Lowest Zone 322 Voltage
37007 ELVRTAX2 230.00
227.5 kV
OLINDAW 37565 1.013 233.1
KESWICK 37558 237.0 1.030
SUTTER 37524 1.002
OBANION 37520 1.003 230.6
ELVERTAW 0.995 228.8
ORANGEVL
WHITEROK
FOOTHILL 0.994
LAKE 0.993
CAMINO S
McCLELLAN
GOLDHILL 1.005
ELVERTAS 37005
ELVERTAS 1.032
HURLEY W
TRCY PMP 1.009
NORTHCTY 1.034
HURLEY S 0.992
CARMICAL 0.994
HURLEY
PROCTER 0.997
STA. A 1.034
MID CTY
EAST CTY
STA. B 1.034
HEDGE 1.040
STA. D 1.034
SOUTHCTY
HEDGE 0.998
BRIGHTON 30348 1.003 230.7
LOCKFORD 30482 1.013 233.1
CAMPBELL 1.004
LLNL 1.009
TRCY PMP 37585
HURLEY W 0.992
BELLOTA 30500 1.024 235.5
POCKET 1.003 230.8
WESTLEY 1.009
ELKGROVE 0.997
RNCHSECO
WEBER 1 30505 1.011 232.4
TRACY 1.028
TESLA D 1.013
TESLA E 231.4 1.006
TCY MP1 1.003
COTTLE A 1.023 235.3
COTTLE B 1.024 235.6
General Electric International, Inc.
PSLF Program
MW/Pct
Tue Oct 16 13:41:49 2001
SMUD
rs04sp10, 2004 Spring Rancho Seco Generation Base Case
1000 MW Rancho Seco Generation, No FPLE Generation Plant
From Western FPLE Study Case 04sp-fplesrev
RNCHSECO 230.00 -BELLOTA 230.00 #1
RNCHSECO 230.00 -BELLOTA 230.00 #2
sac-gb2.drw
t.wrk
Rating = 2

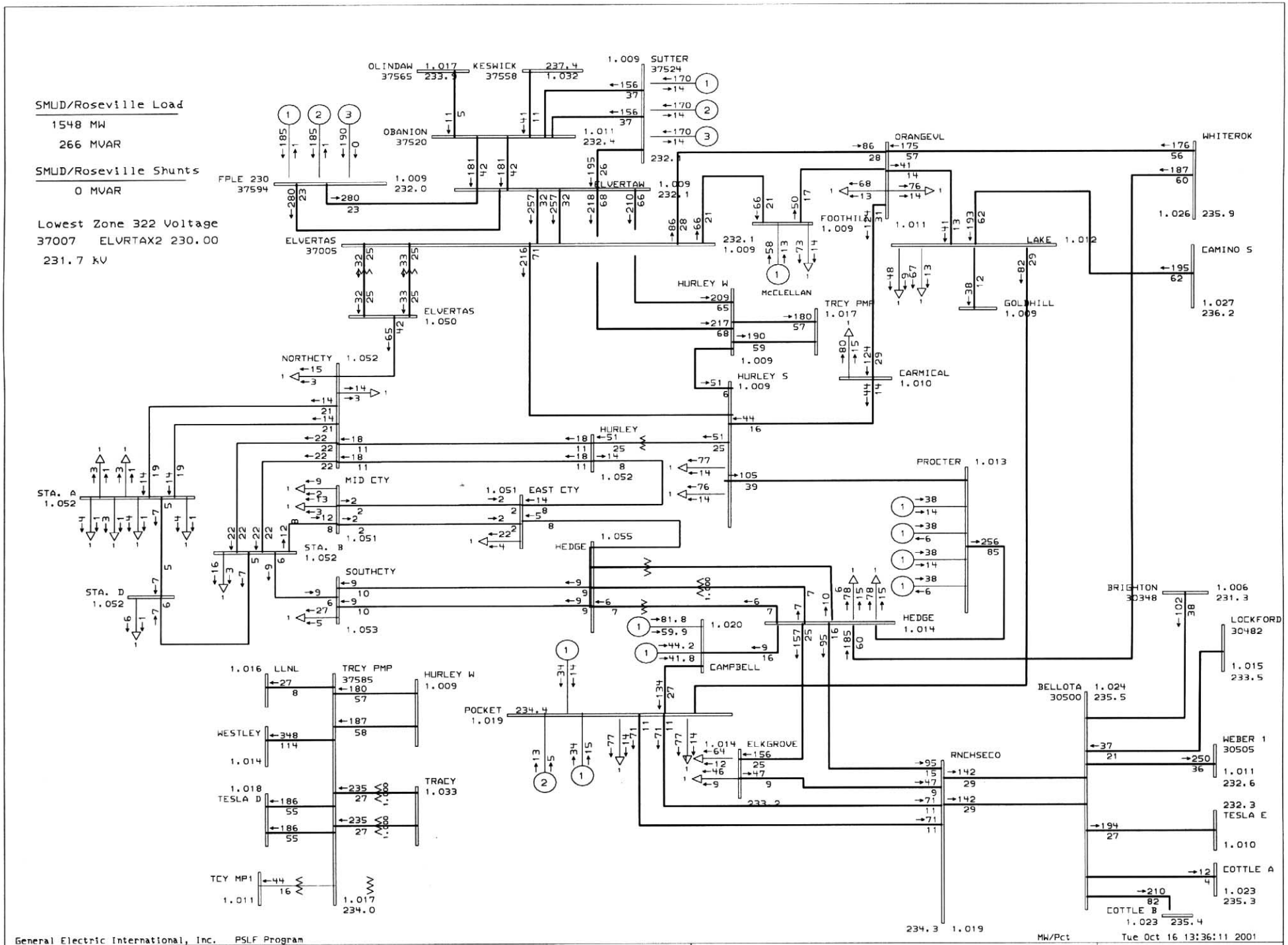
SMUD/Roseville Load
1548 MW
266 MVAR
SMUD/Roseville Shunts
0 MVAR
Lowest Zone 322 Voltage
37007 ELVRTAX2 230.00
231.7 kV
OLINDAW 37565 1.017 233.9
KESWICK 37558 237.4 1.032
1.009 SUTTER 37524
OBANION 37520
1.011 232.4
FPLE 230 37594 1.009 232.0
ELVERTAW 1.009 232.1
ORANGEVL
WHITEROK
1.026 235.9
FOOTHILL 1.009
1.011
LAKE 1.012
CAMINO S
1.027 236.2
GOLDHILL 1.009
ELVERTAS 37005
ELVERTAS 1.050
McCLELLAN
HURLEY W
TRCY PMP 1.017
HURLEY S 1.009
CARMICAL 1.010
NORTHCTY 1.052
HURLEY
1.052
PROCTER 1.013
STA. A 1.052
MID CTY
1.051 EAST CTY
STA. B 1.052
HEDGE 1.055
STA. D 1.052
SOUTHCTY
1.053
1.020
HEDGE 1.014
BRIGHTON 30348 1.006 231.3
LOCKFORD 30482
1.015 233.5
CAMPBELL
1.016 LLNL
TRCY PMP 37585
HURLEY W 1.009
POCKET 1.019 234.4
BELLOTA 30500 1.024 235.5
WESTLEY 1.014
1.014 ELKGROVE
RNCHSECO
WEBER 1 30505
1.011 232.6
1.018 TESLA D
TRACY 1.033
232.3 TESLA E
1.010
TCY MP1 1.011
1.017 234.0
COTTLE A
1.023 235.3
COTTLE B 1.023 235.4
234.3 1.019
MW/Pct
Tue Oct 16 13:36:11 2001
General Electric International, Inc. PSLF Program
SMUD
rs04sp01, 2004 Spring Rancho Seco Generation Base Case
No Rancho Seco Generation Plant, FPLE Generation at 560 MW
From Western FPLE Study Case 04sp-fplesrev
BASE CASE
sac-gb2.drw
t.wrk
Rating = 1

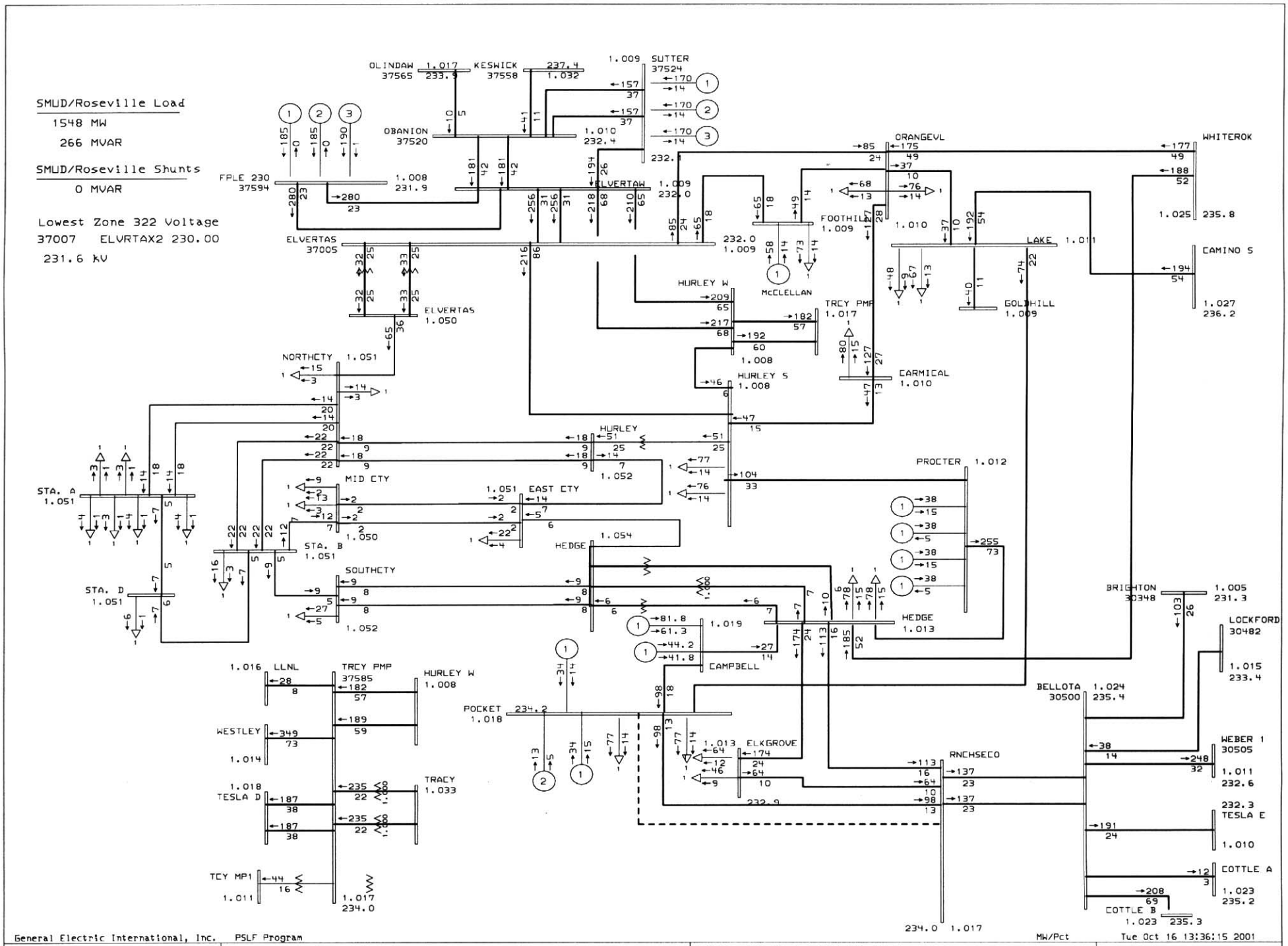
SMUD/Roseville Load
1548 MW
266 MVAR
SMUD/Roseville Shunts
0 MVAR
Lowest Zone 322 Voltage
37007 ELVRTAX2 230.00
231.6 kV
OLINDAW 37565
KESWICK 37558
SUTTER 37524
OBANION 37520
FPLE 230 37594
ELVERTAW
ELVERTAS 37005
ELVERTAS 1.050
ORANGEVL
WHITEROK
FOOTHILL 1.009
LAKE
CAMINO S
McCLELLAN
HURLEY W
TRCY PMP 1.017
GOLDHILL 1.009
HURLEY S 1.008
CARMICAL 1.010
NORTHCTY 1.051
HURLEY
PROCTER 1.012
STA. A 1.051
MID CTY
EAST CTY
STA. B 1.051
HEDGE
STA. D 1.051
SOUTHCTY
HEDGE 1.013
BRIGHTON 30348
LOCKFORD 30482
CAMPBELL
LLNL
TRCY PMP 37585
HURLEY W 1.008
POCKET 1.018
BELLOTA 30500
WESTLEY
ELKGROVE
RNCHSECO
WEBER 1 30505
TRACY 1.033
TESLA D
TESLA E
TCY MP1
COTTLE A
COTTLE B
General Electric International, Inc.
PSLF Program
MW/Pct
Tue Oct 16 13:36:15 2001
SMUD
rs04sp01, 2004 Spring Rancho Seco Generation Base Case
No Rancho Seco Generation Plant, FPLE Generation at 560 MW
From Western FPLE Study Case 04sp-fplesrev
POCKET 230.00 -RNCHSECO 230.00 #2
sac-gb2.drw
t.wrk
Rating = 2

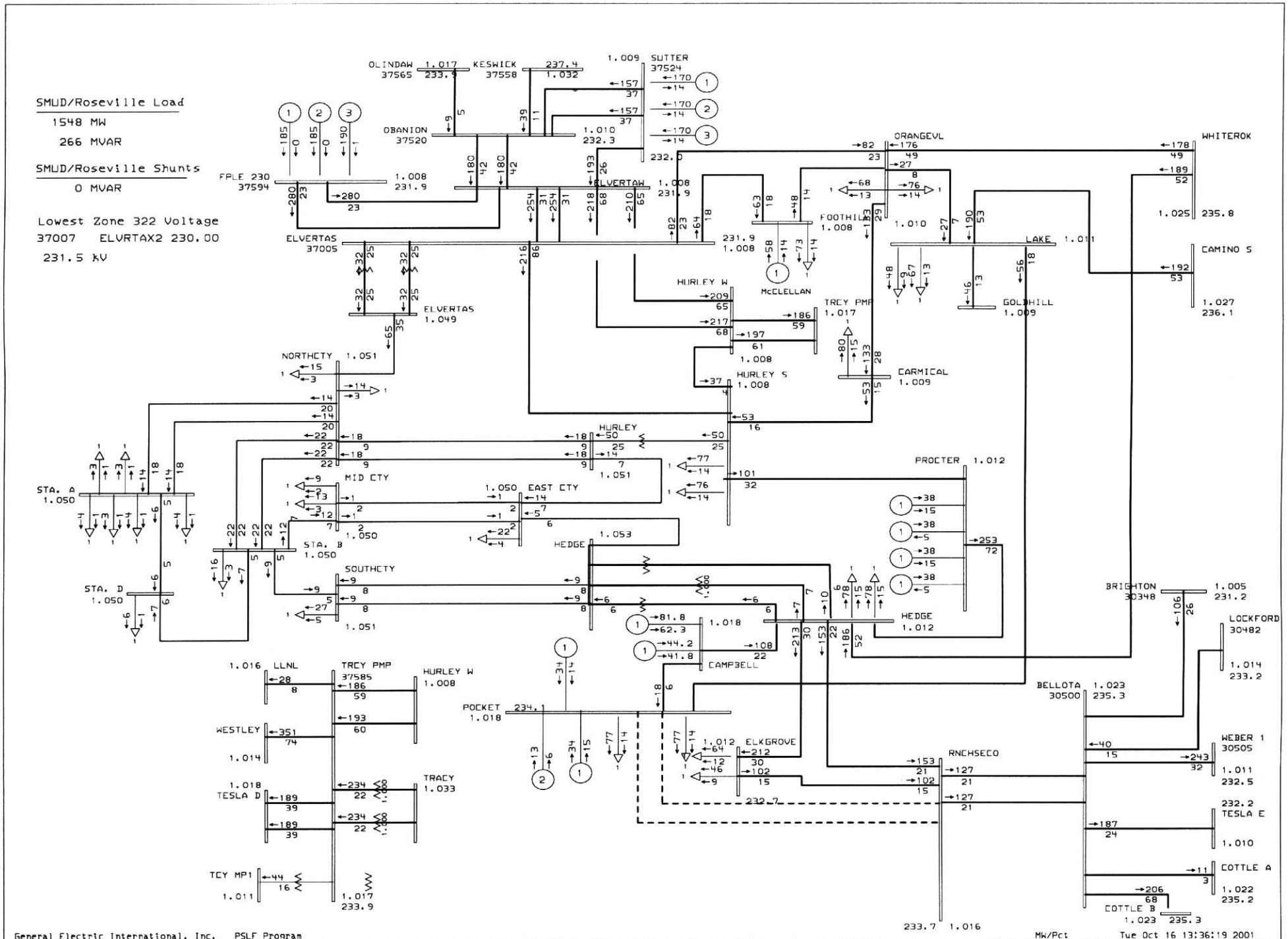
SMUD/Roseville Load
1548 MW
266 MVAR
SMUD/Roseville Shunts
0 MVAR
Lowest Zone 322 Voltage
37007 ELVRTAX2 230.00
231.5 kV
OLINDAW 1.017 233.9
KESWICK 37558 237.4 1.032
1.009 SUTTER 37524
OBANION 37520
1.010 232.3
FPLE 230 37594 1.008 231.9
ELVERTAW 1.008 231.9
ORANGEVL 232.0
WHITEROK 1.025 235.8
FOOTHILL 1.008
1.010
LAKE 1.011
CAMINO S 1.027 236.1
ELVERTAS 37005 231.9 1.008
ELVERTAS 1.049
McCLELLAN
HURLEY W
TRCY PMP 1.017
GOLDHILL 1.009
NORTHCTY 1.051
HURLEY S 1.008
CARMICAL 1.009
HURLEY 1.051
PROCTER 1.012
STA. A 1.050
MID CTY 1.050
EAST CTY 1.050
STA. B 1.050
HEDGE 1.053
SOUTHCTY 1.051
STA. D 1.050
BRIGHTON 30348 1.005 231.2
HEDGE 1.012
LOCKFORD 30482 1.014 233.2
1.018
CAMPBELL
1.016 LLNL
TRCY PMP 37585
HURLEY W 1.008
BELLOTA 30500 1.023 235.3
POCKET 1.018 234.1
WESTLEY 1.014
1.012 ELKGROVE
RNCHSECO
WEBER 1 30505 1.011 232.5
1.018 TESLA D
TRACY 1.033
232.2 TESLA E 1.010
TCY MP1 1.011
1.017 233.9
COTTLE A 1.022 235.2
COTTLE B 1.023 235.3
233.7 1.016
General Electric International, Inc. PSLF Program
MW/Pct
Tue Oct 16 13:36:19 2001
SMUD
rs04sp01, 2004 Spring Rancho Seco Generation Base Case
No Rancho Seco Generation Plant, FPLE Generation at 560 MW
From Western FPLE Study Case 04sp-fplesrev
POCKET 230.00 -RNCHSECO 230.00 #1
POCKET 230.00 -RNCHSECO 230.00 #2
sac-gb2.drw
t.wrk
Rating = 2

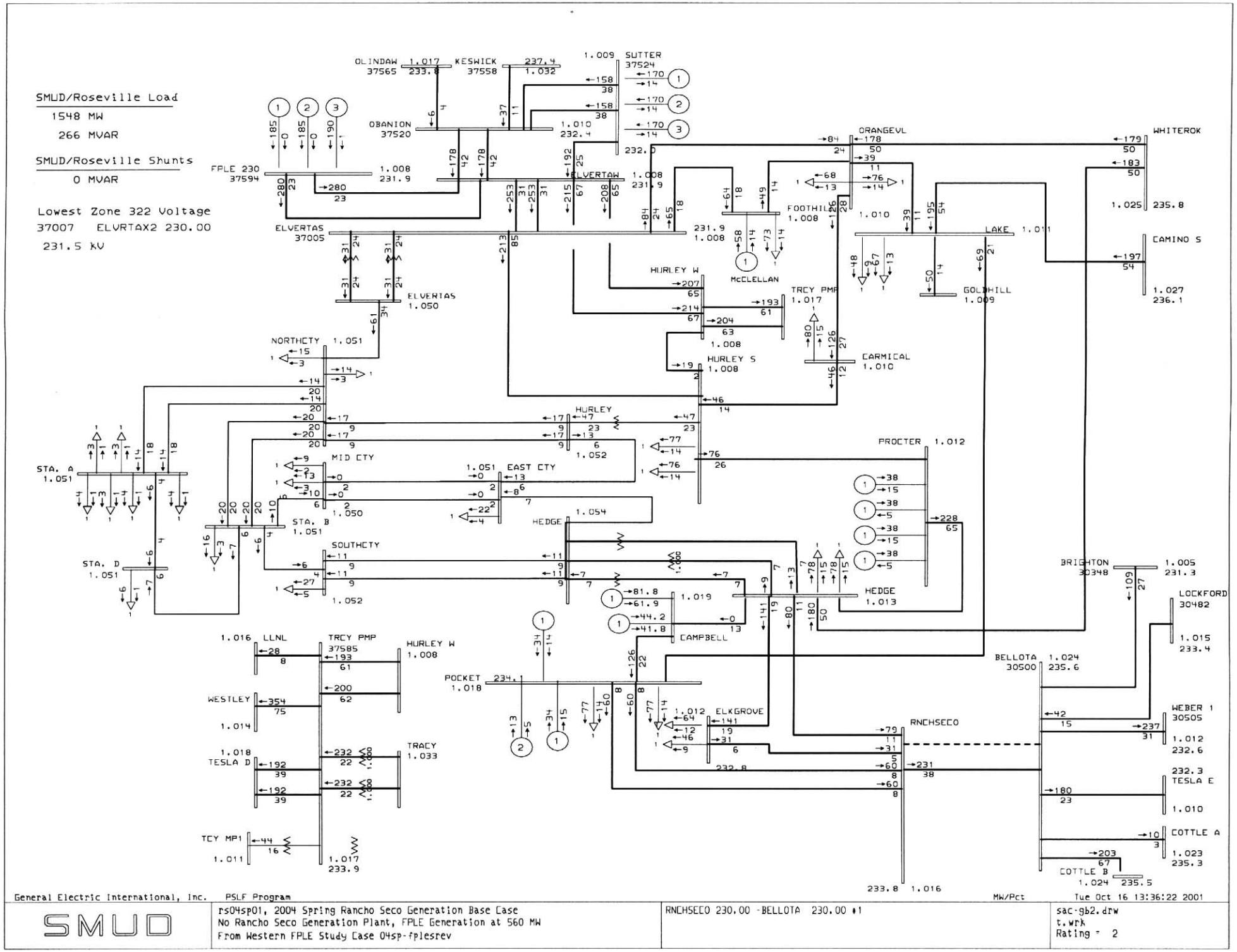
SMUD/Roseville Load
1548 MW
266 MVAR
SMUD/Roseville Shunts
0 MVAR
Lowest Zone 322 Voltage
37007 ELVRTAX2 230.00
231.5 kV
OLINDAW 37565
KESWICK 37558
SUTTER 37524
OBANION 37520
FPLE 230 37594
ELVERTAW
ELVERTAS 37005
ELVERTAS 1.050
ORANGEVL
WHITEROK
FOOTHILL 1.008
McCLELLAN
LAKE 1.011
CAMINO S
GOLDHILL 1.009
HURLEY W
TRCY PMP 1.017
CARMICAL 1.010
HURLEY S 1.008
NORTHCTY 1.051
HURLEY
PROCTER 1.012
STA. A 1.051
MID CTY
EAST CTY
STA. B 1.051
HEDGE 1.054
SOUTHCTY
STA. D 1.051
HEDGE 1.013
BRIGHTON 30348
LOCKFORD 30482
CAMPBELL
LLNL
TRCY PMP 37585
HURLEY W 1.008
POCKET 1.018
BELLOTA 30500
WESTLEY
ELKGROVE
RNCHSECO
WEBER 1 30505
TRACY 1.033
TESLA D
TESLA E
COTTLE A
TCY MP1
COTTLE B
General Electric International, Inc.
PSLF Program
MW/Pct
Tue Oct 16 13:36:22 2001
SMUD
rs04sp01, 2004 Spring Rancho Seco Generation Base Case
No Rancho Seco Generation Plant, FPLE Generation at 560 MW
From Western FPLE Study Case 04sp-fplesrev
RNCHSECO 230.00 -BELLOTA 230.00 #1
sac-gb2.drw
t.wrk
Rating = 2

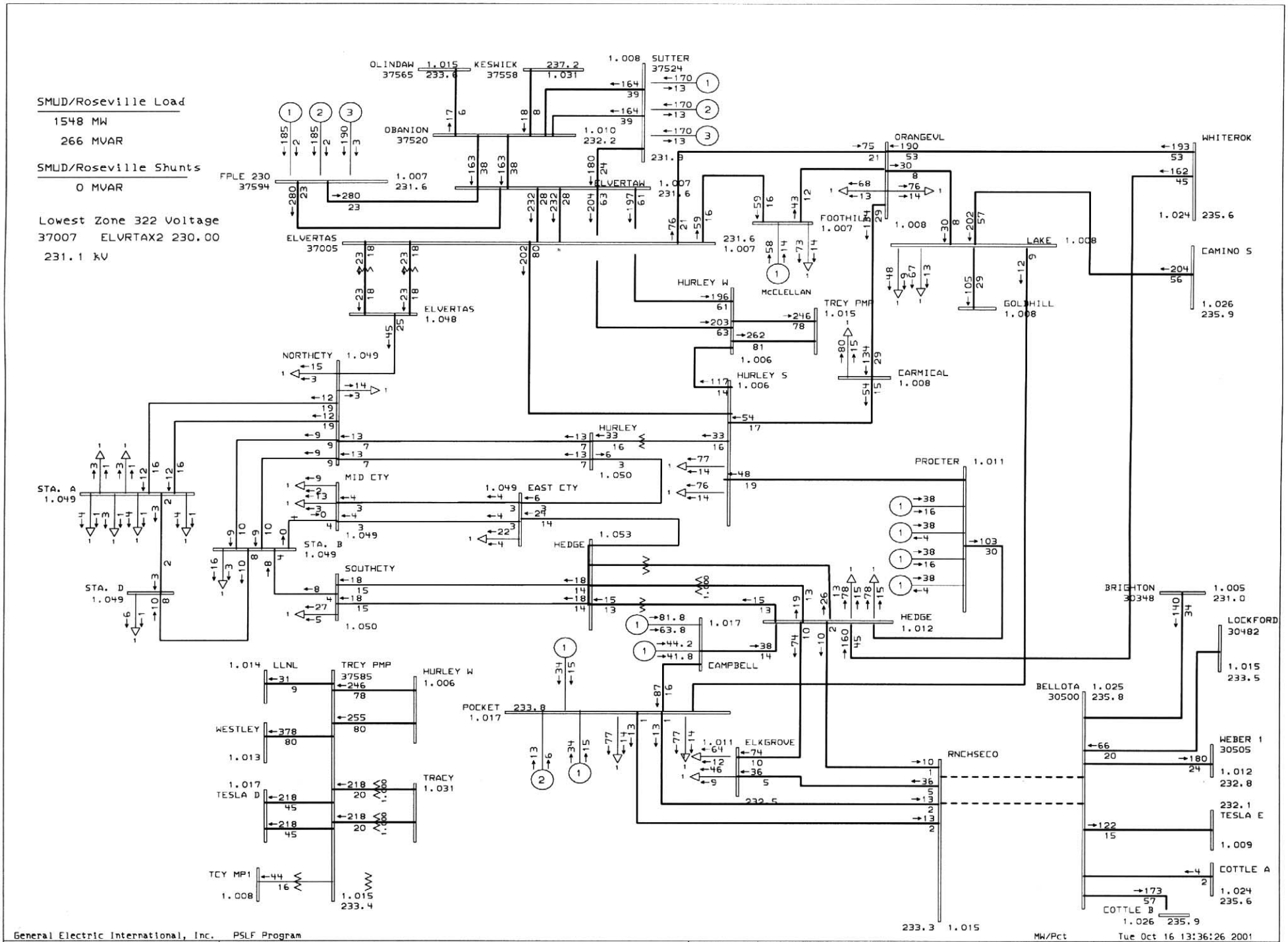
SMUD/Roseville Load
1548 MW
266 MVAR
SMUD/Roseville Shunts
0 MVAR
Lowest Zone 322 Voltage
37007 ELVRTAX2 230.00
231.1 kV
OLINDAW 1.015 233.6 37565
KESWICK 237.2 1.031 37558
SUTTER 1.008 37524
OBANION 37520
1.010 232.2
FPLE 230 37594
1.007 231.6
ELVERTAW
ELVERTAS 37005
ELVERTAS 1.048
ORANGEVL
WHITEROK
1.024 235.6
FOOTHILL 1.007
LAKE 1.008
CAMINO S
1.026 235.9
McCLELLAN
HURLEY W
TRCY PMP 1.015
GOLDHILL 1.008
CARMICAL 1.008
HURLEY S 1.006
NORTHCTY 1.049
HURLEY 1.050
PROCTER 1.011
STA. A 1.049
MID CTY
EAST CTY 1.049
STA. B 1.049
HEDGE 1.053
SOUTHCTY 1.050
STA. D 1.049
HEDGE 1.012
BRIGHTON 30348
1.005 231.0
LOCKFORD 30482
1.015 233.5
1.017
CAMPBELL
1.014 LLNL
TRCY PMP 37585
HURLEY W 1.006
BELLOTA 1.025 235.8 30500
POCKET 233.8 1.017
WESTLEY 1.013
1.011 ELKGROVE
RNCHSECO
WEBER 1 30505
1.012 232.8
1.017 TESLA D
TRACY 1.031
232.1 TESLA E
1.009
TCY MP1 1.008
1.015 233.4
COTTLE A
1.024 235.6
COTTLE B 1.026 235.9
233.3 1.015
General Electric International, Inc. PSLF Program
MW/Pct
Tue Oct 16 13:36:26 2001
SMUD
rs04sp01, 2004 Spring Rancho Seco Generation Base Case
No Rancho Seco Generation Plant, FPLE Generation at 560 MW
From Western FPLE Study Case 04sp-fplesrev
RNCHSECO 230.00 -BELLOTA 230.00 #1
RNCHSECO 230.00 -BELLOTA 230.00 #2
sac-gb2.drw
t.wrk
Rating = 2

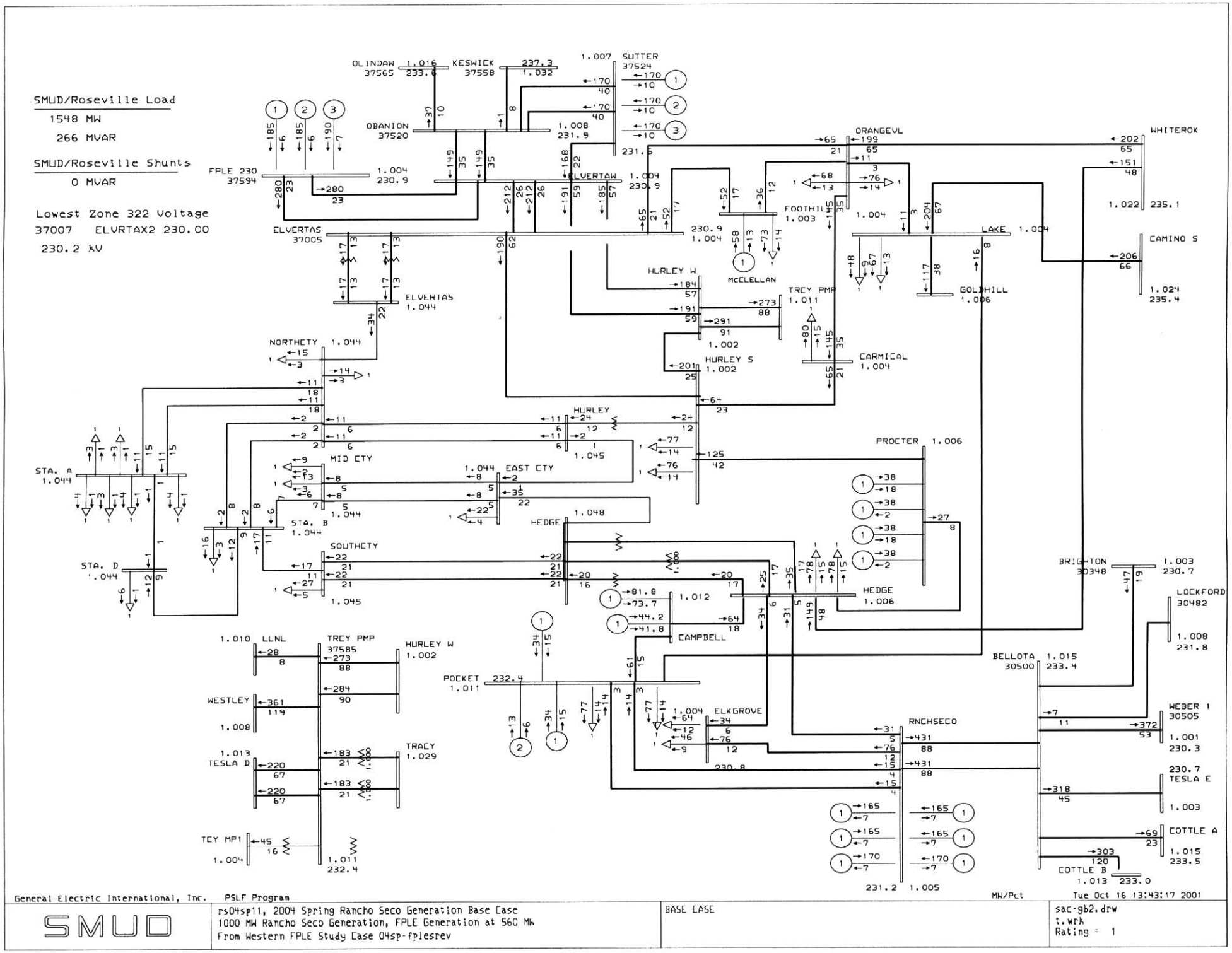
SMUD/Roseville Load
1548 MW
266 MVAR
SMUD/Roseville Shunts
0 MVAR
Lowest Zone 322 Voltage
37007 ELVRTAX2 230.00
230.2 kV
OLINDAW 1.016 233.6
37565
KESWICK 237.3
37558 1.032
1.007 SUTTER
37524
OBANION
37520
1.008
231.9
FPLE 230
37594
1.004
230.9
ELVERTAW 1.004
230.9
231.6
ORANGEVL
199
WHITEROK
202
65
151
48
1.022 235.1
FOOTHILL
1.003
1.004
LAKE 1.004
CAMINO S
206
66
1.024
235.4
ELVERTAS
37005
230.9
1.004
McCLELLAN
HURLEY W
TRCY PMP
1.011
GOLDHILL
1.006
ELVERTAS
1.044
NORTHCTY 1.044
HURLEY S
1.002
CARMICAL
1.004
HURLEY
1.045
PROCTER 1.006
STA. A
1.044
MID CTY
EAST CTY
1.044
STA. B
1.044
HEDGE 1.048
SOUTHCTY
1.045
STA. D
1.044
HEDGE
1.006
BRIGHTON
30348
1.003
230.7
LOCKFORD
30482
1.008
231.8
1.012
CAMPBELL
1.010 LLNL
TRCY PMP
37585
HURLEY W
1.002
BELLOTA 1.015
30500
233.4
POCKET 232.4
1.011
WESTLEY
1.008
ELKGROVE
1.004
RNCHSECO
WEBER 1
30505
1.001
230.3
TRACY
1.029
1.013
TESLA D
230.8
230.7
TESLA E
1.003
TCY MP1
1.004
1.011
232.4
COTTLE A
1.015
233.5
COTTLE B
1.013 233.0
231.2 1.005
MW/Pct
Tue Oct 16 13:43:17 2001
General Electric International, Inc. PSLF Program
SMUD
rs04sp11, 2004 Spring Rancho Seco Generation Base Case
1000 MW Rancho Seco Generation, FPLE Generation at 560 MW
From Western FPLE Study Case 04sp-fplesrev
BASE CASE
sac-gb2.drw
t.wrk
Rating = 1

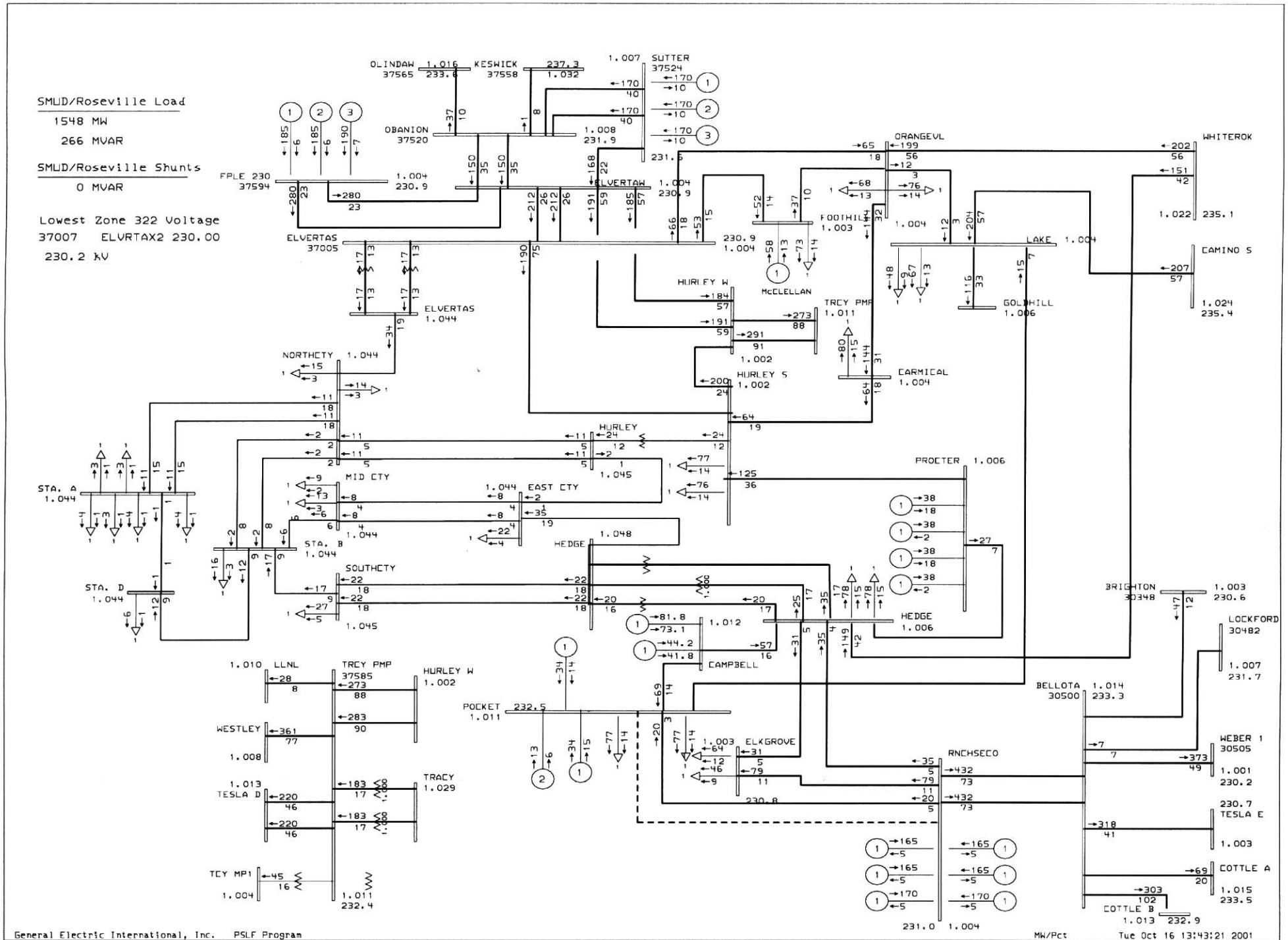
SMUD/Roseville Load
1548 MW
266 MVAR
SMUD/Roseville Shunts
0 MVAR
Lowest Zone 322 Voltage
37007 ELVRTAX2 230.00
230.2 kV
OLINDAW 1.016 233.6 37565
KESWICK 237.3 1.032 37558
1.007 SUTTER 37524
OBANION 37520
1.008 231.9
FPLE 230 37594
1.004 230.9
ELVERTAW 1.004 230.9
ELVERTAS 37005
230.9 1.004
ELVERTAS 1.044
ORANGEVL
WHITEROK
1.022 235.1
FOOTHILL 1.003
LAKE 1.004
CAMINO S
1.024 235.4
GOLDHILL 1.006
McCLELLAN
HURLEY W
TRCY PMP 1.011
CARMICAL 1.004
HURLEY S 1.002
NORTHCTY 1.044
HURLEY
1.045
PROCTER 1.006
STA. A 1.044
MID CTY
1.044 EAST CTY
STA. B 1.044
HEDGE 1.048
SOUTHCTY
1.045
STA. D 1.044
HEDGE 1.006
BRIGHTON 30348
1.003 230.6
LOCKFORD 30482
1.007 231.7
1.012
CAMPBELL
1.010 LLNL
TRCY PMP 37585
HURLEY W 1.002
POCKET 232.5 1.011
BELLOTA 30500 1.014 233.3
WESTLEY 1.008
ELKGROVE
RNCHSECO
WEBER 1 30505
1.001 230.2
1.013 TESLA D
TRACY 1.029
230.8
230.7 TESLA E
1.003
TCY MP1 1.004
1.011 232.4
COTTLE A
1.015 233.5
COTTLE B 1.013 232.9
231.0 1.004
General Electric International, Inc. PSLF Program
MW/Pct
Tue Oct 16 13:43:21 2001
SMUD
rs04sp11, 2004 Spring Rancho Seco Generation Base Case
1000 MW Rancho Seco Generation, FPLE Generation at 560 MW
From Western FPLE Study Case 04sp-fplesrev
POCKET 230.00 -RNCHSECO 230.00 #2
sac-gb2.drw
t.wrk
Rating = 2

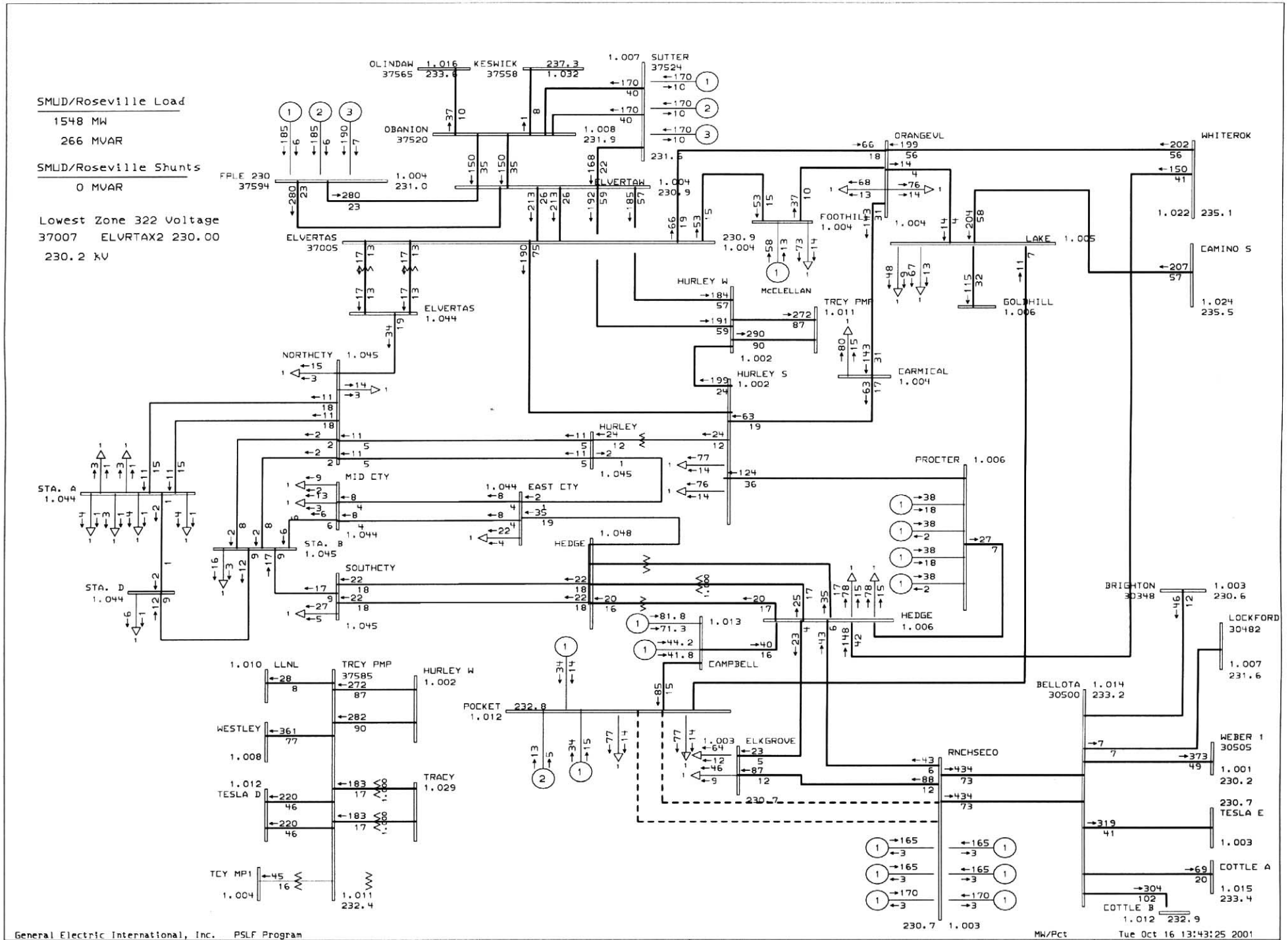
SMUD/Roseville Load
1548 MW
266 MVAR
SMUD/Roseville Shunts
0 MVAR
Lowest Zone 322 Voltage
37007 ELVRTAX2 230.00
230.2 kV
OLINDAW 1.016 233.6 37565
KESWICK 237.3 1.032 37558
1.007 SUTTER 37524
OBANION 37520
1.008 231.9
FPLE 230 37594
1.004 231.0
ELVERTAW 1.004 230.9
ELVERTAS 37005
ELVERTAS 1.044
NORTHCTY 1.045
HURLEY W
McCLELLAN
TRCY PMP 1.011
FOOTHILL 1.004
ORANGEVL
WHITEROK
1.022 235.1
CAMINO S
1.024 235.5
LAKE 1.005
GOLDHILL 1.006
CARMICAL 1.004
HURLEY S 1.002
HURLEY
PROCTER 1.006
STA. A 1.044
MID CTY
EAST CTY
STA. B 1.045
HEDGE 1.048
STA. D 1.044
SOUTHCTY
HEDGE 1.006
BRIGHTON 30348
1.003 230.6
LOCKFORD 30482
1.007 231.6
CAMPBELL
LLNL
TRCY PMP 37585
HURLEY W 1.002
POCKET 232.8 1.012
WESTLEY
1.008
TRACY 1.029
TESLA D
TCY MP1
1.004
1.011 232.4
ELKGROVE
RNCHSECO
BELLOTA 30500 1.014 233.2
WEBER 1 30505
1.001 230.2
230.7 TESLA E
1.003
COTTLE A
1.015 233.4
COTTLE B 1.012 232.9
230.7 1.003
General Electric International, Inc. PSLF Program
MW/Pct
Tue Oct 16 13:43:25 2001
SMUD
rs04sp11, 2004 Spring Rancho Seco Generation Base Case
1000 MW Rancho Seco Generation, FPLE Generation at 560 MW
From Western FPLE Study Case 04sp-fplesrev
POCKET 230.00 -RNCHSECO 230.00 #1
POCKET 230.00 -RNCHSECO 230.00 #2
sac-gb2.drw
t.wrk
Rating = 2

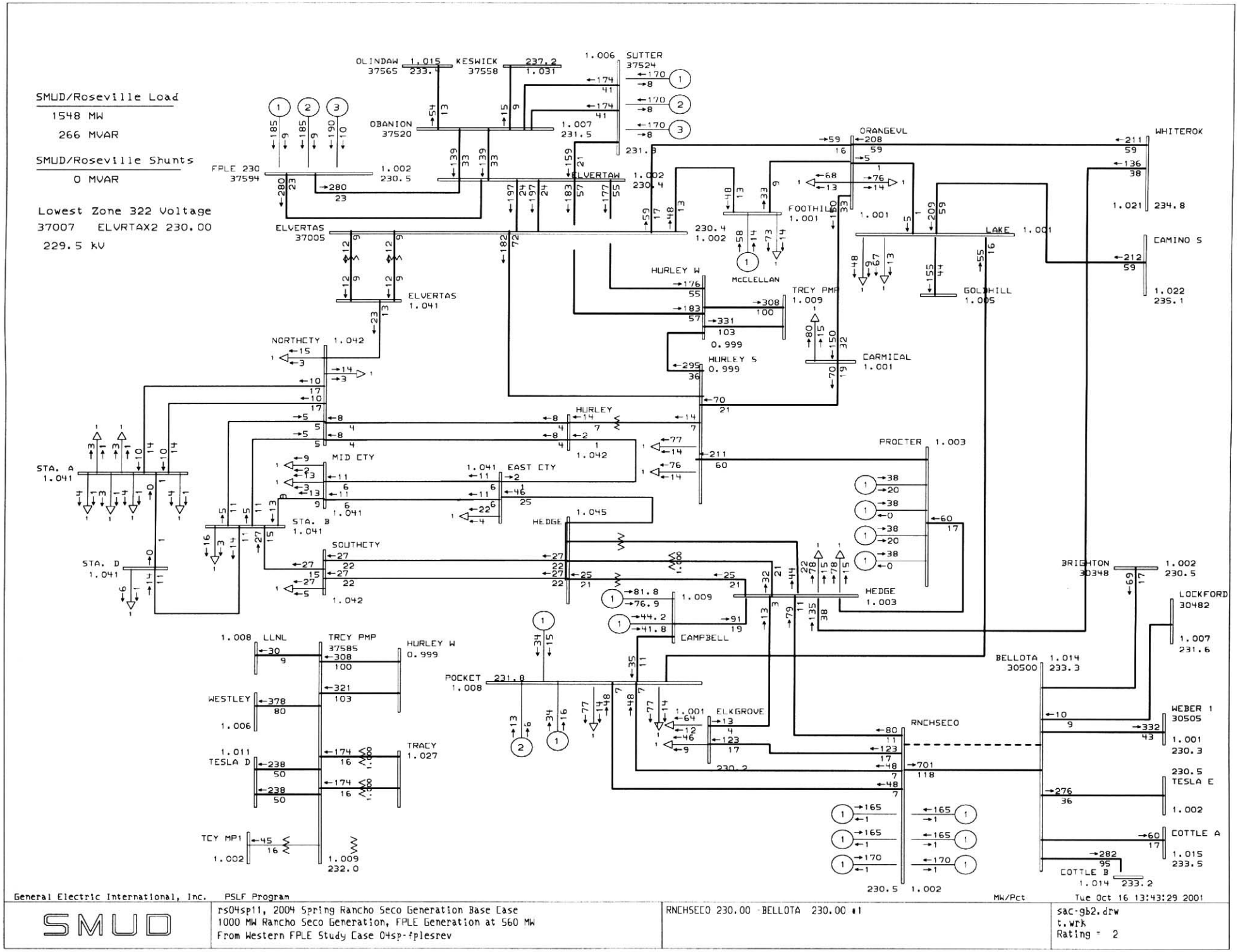
SMUD/Roseville Load
1548 MW
266 MVAR
SMUD/Roseville Shunts
0 MVAR
Lowest Zone 322 Voltage
37007 ELVRTAX2 230.00
229.5 kV
OLINDAW 37565
KESWICK 37558
SUTTER 37524
OBANION 37520
FPLE 230 37594
ELVERTAW
ELVERTAS 37005
ELVERTAS 1.041
ORANGEVL
WHITEROK
FOOTHILL 1.001
LAKE 1.001
CAMINO S
McCLELLAN
HURLEY W
TRCY PMP 1.009
GOLDHILL 1.005
CARMICAL 1.001
HURLEY S 0.999
NORTHCTY 1.042
HURLEY
PROCTER 1.003
STA. A 1.041
MID CTY
EAST CTY
STA. B 1.041
HEDGE 1.045
STA. D 1.041
SOUTHCTY 1.042
HEDGE 1.003
BRIGHTON 30348
LOCKFORD 30482
CAMPBELL
LLNL
TRCY PMP 37585
HURLEY W 0.999
WESTLEY
TESLA D
TRACY 1.027
TCY MP1
POCKET 1.008
ELKGROVE
RNCHSECO
BELLOTA 30500
WEBER 1 30505
TESLA E
COTTLE A
COTTLE B
General Electric International, Inc. PSLF Program
MW/Pct
Tue Oct 16 13:43:29 2001
SMUD
rs04sp11, 2004 Spring Rancho Seco Generation Base Case
1000 MW Rancho Seco Generation, FPLE Generation at 560 MW
From Western FPLE Study Case 04sp-fplesrev
RNCHSECO 230.00 -BELLOTA 230.00 #1
sac-gb2.drw
t.wrk
Rating = 2

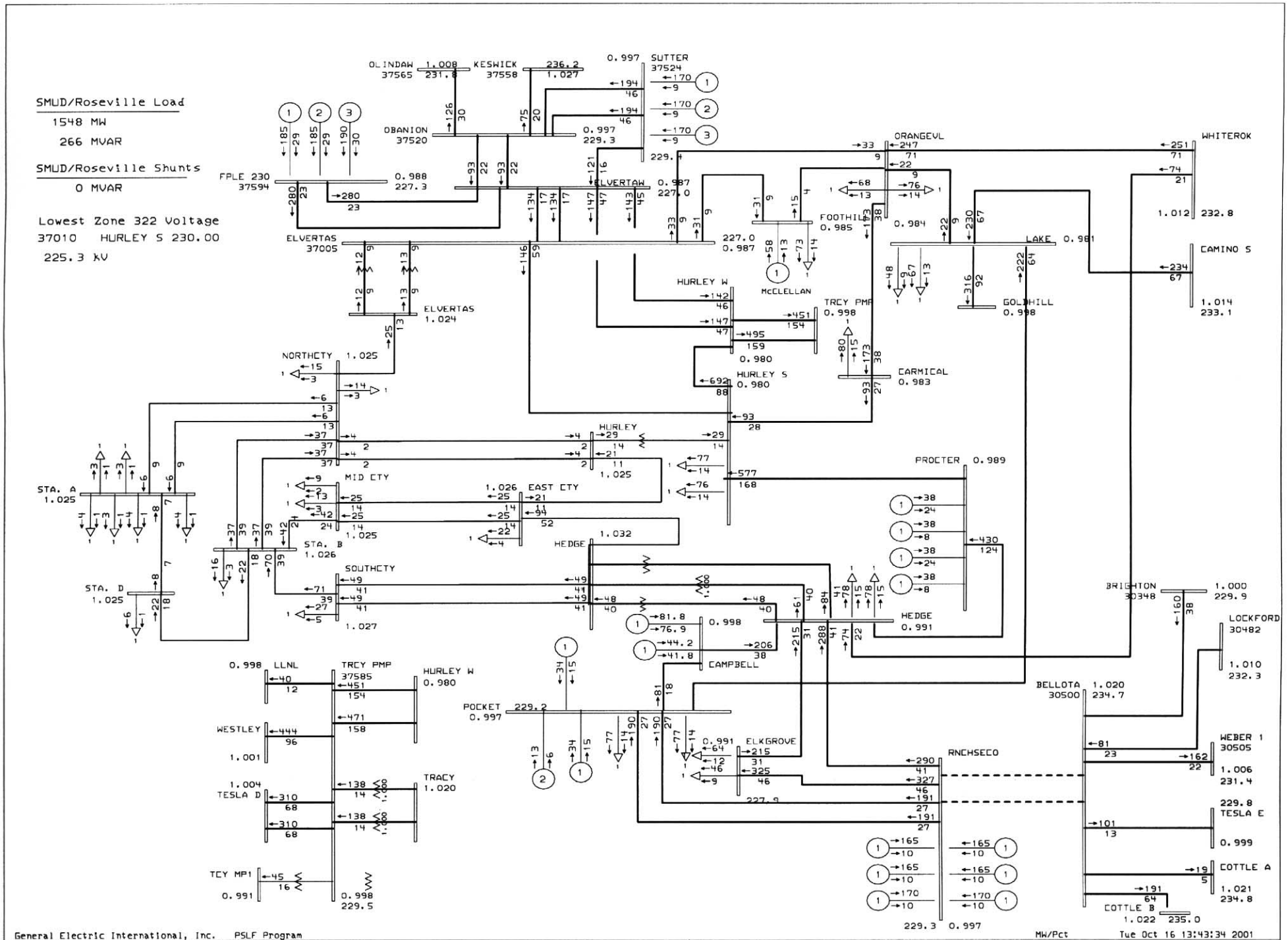
SMUD/Roseville Load
1548 MW
266 MVAR
SMUD/Roseville Shunts
0 MVAR
Lowest Zone 322 Voltage
37010 HURLEY S 230.00
225.3 kV
OLINDAW 1.008 231.8
37565
KESWICK 236.2 1.027
37558
0.997 SUTTER
37524
OBANION
37520
0.997 229.3
229.4
FPLE 230
37594
0.988 227.3
ELVERTAW 0.987 227.0
ELVERTAS
37005
227.0 0.987
ORANGEVL
WHITEROK
1.012 232.8
FOOTHILL 0.985
0.984
LAKE 0.981
CAMINO S
1.014 233.1
HURLEY W
McCLELLAN
TRCY PMP 0.998
GOLDHILL 0.998
ELVERTAS 1.024
NORTHCTY 1.025
HURLEY S 0.980
CARMICAL 0.983
HURLEY
1.025
PROCTER 0.989
STA. A 1.025
MID CTY
1.026 EAST CTY
STA. B 1.026
HEDGE 1.032
SOUTHCTY
1.027
STA. D 1.025
BRIGHTON 30348
1.000 229.9
LOCKFORD 30482
1.010 232.3
HEDGE 0.991
0.998
CAMPBELL
BELLOTA 30500 1.020 234.7
0.998 LLNL
TRCY PMP 37585
HURLEY W 0.980
POCKET 229.2 0.997
WESTLEY
1.001
0.991 ELKGROVE
RNCHSECO
WEBER 1 30505
1.006 231.4
1.004 TESLA D
TRACY 1.020
229.8 TESLA E
0.999
TCY MP1
0.991
0.998 229.5
COTTLE A
1.021 234.8
COTTLE B 1.022 235.0
229.3 0.997
General Electric International, Inc. PSLF Program
MW/Pct
Tue Oct 16 13:43:34 2001
SMUD
rs04sp11, 2004 Spring Rancho Seco Generation Base Case
1000 MW Rancho Seco Generation, FPLE Generation at 560 MW
From Western FPLE Study Case 04sp-fplesrev
RNCHSECO 230.00 -BELLOTA 230.00 #1
RNCHSECO 230.00 -BELLOTA 230.00 #2
sac-gb2.drw
t.wrk
Rating = 2