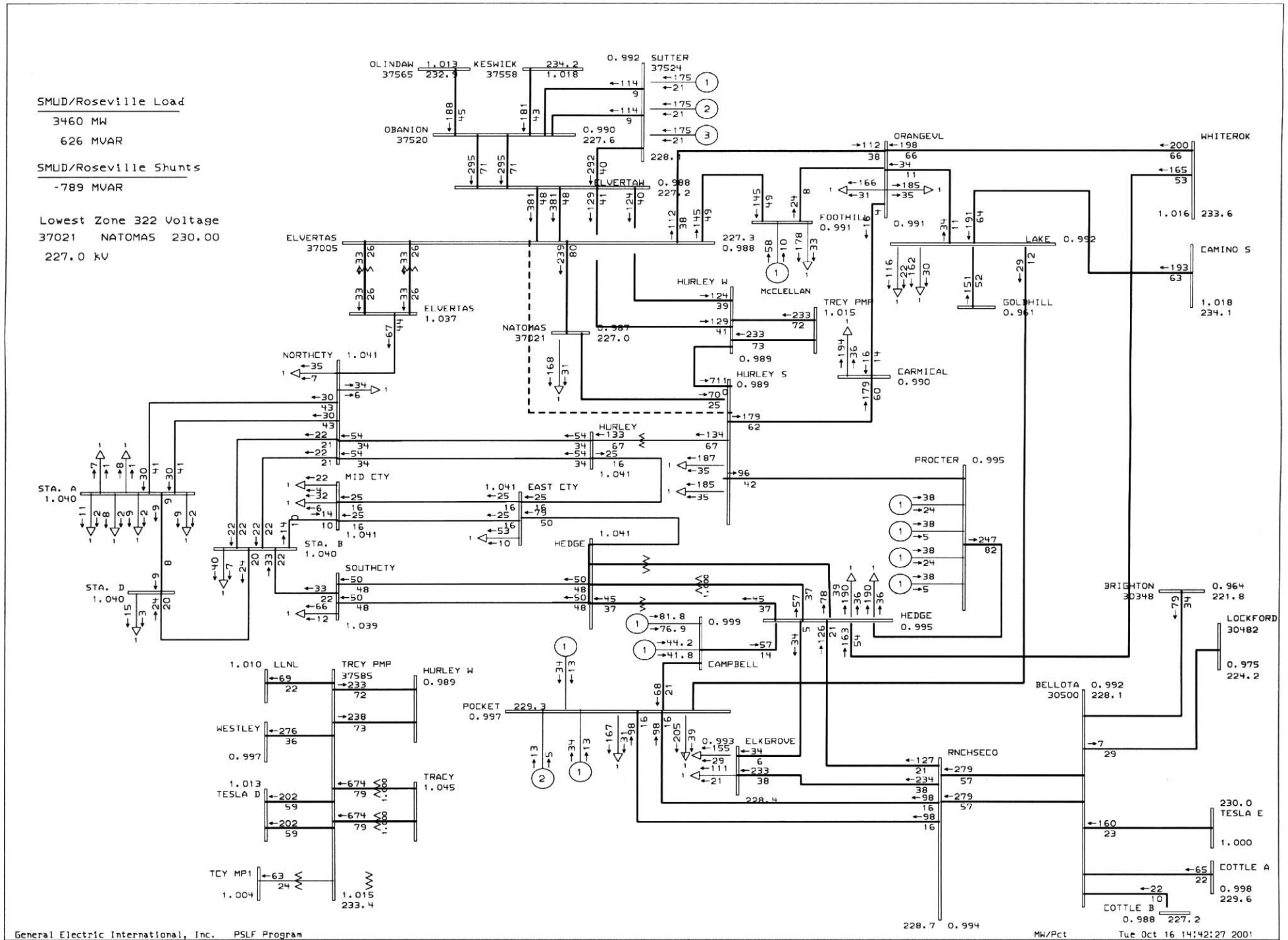
SMUD/Roseville Load
3460 MW
626 MVAR
SMUD/Roseville Shunts
-789 MVAR
Lowest Zone 322 Voltage
37021 NATOMAS 230.00
227.0 kV
OLINDAW 37565 1.013 232.9
KESWICK 37558 234.2 1.018
SUTTER 37524 0.992
OBANION 37520 0.990 227.6
ELVERTAW 0.988 227.2
ORANGEVL
WHITEROK
FOOTHILL 0.991
LAKE 0.992
CAMINO S
ELVERTAS 37005
ELVERTAS 1.037
HURLEY W
McCLELLAN
TRCY PMP 1.015
GOLDHILL 0.961
NATOMAS 37021 0.987 227.0
NORTHCTY 1.041
HURLEY S 0.989
CARMICAL 0.990
HURLEY
PROCTER 0.995
STA. A 1.040
MID CTY
EAST CTY
STA. B 1.040
HEDGE 1.041
SOUTHCTY
STA. D 1.040
HEDGE 0.995
BRIGHTON 30348 0.964 221.8
LOCKFORD 30482 0.975 224.2
CAMPBELL
LLNL 1.010
TRCY PMP 37585
HURLEY W 0.989
POCKET 0.997
BELLOTA 30500 0.992 228.1
WESTLEY 0.997
ELKGROVE
RNCHSECO
TESLA D 1.013
TRACY 1.045
TESLA E 230.0 1.000
TCY MP1 1.004
COTTLE A 0.998 229.6
COTTLE B 0.988 227.2
General Electric International, Inc. PSLF Program
MW/Pct
Tue Oct 16 14:42:27 2001
SMUD
rs05hs00, 2005 Heavy Summer Rancho Seco Generation Study Case
No Rancho Seco Generation Plant, No FPLE Generation Plant
From Western FPLE Study Case 05hs-no-fple
BASE CASE
sac-gb4.drw
t.wrk
Rating = 1

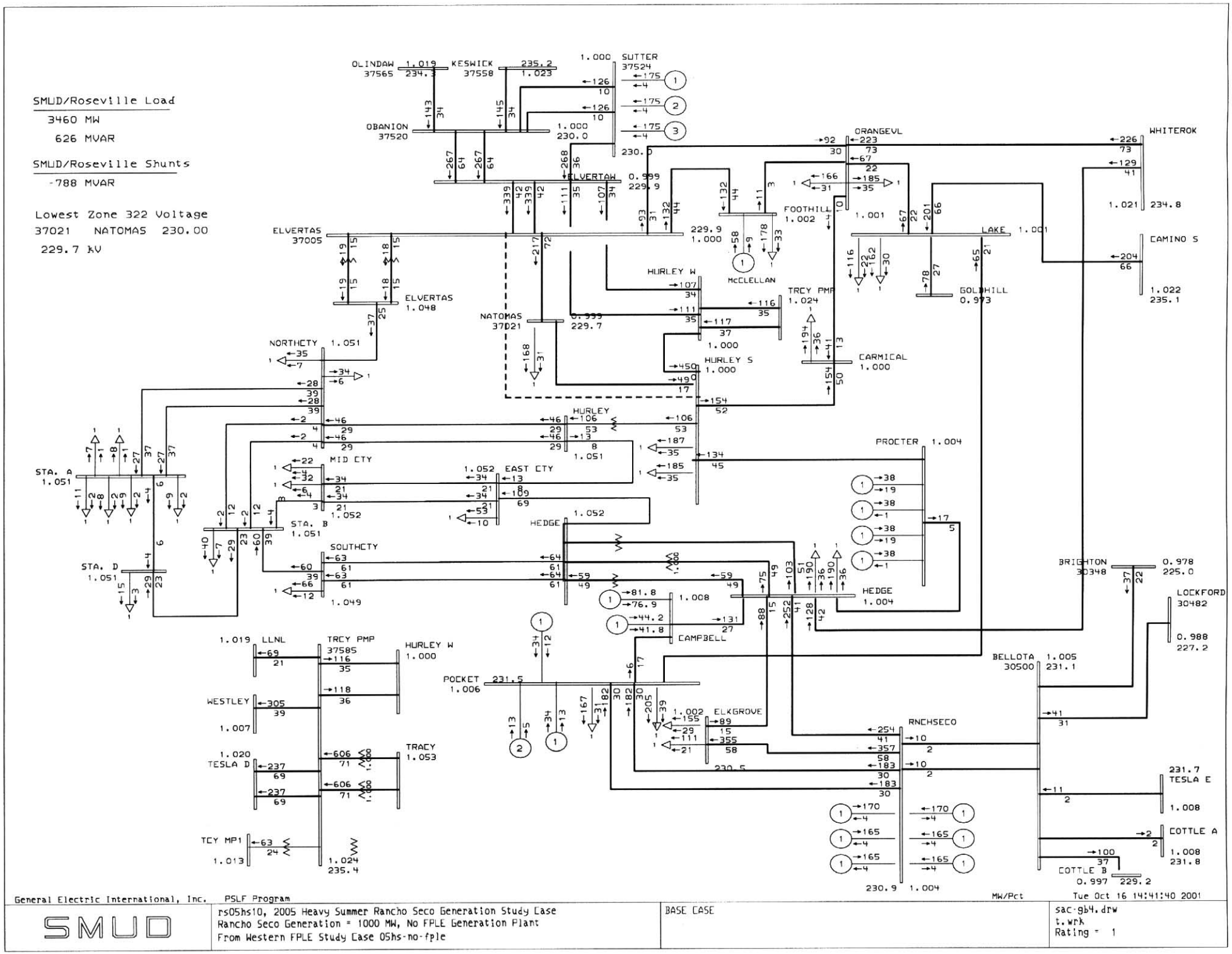
SMUD/Roseville Load
3460 MW
626 MVAR
SMUD/Roseville Shunts
-788 MVAR
Lowest Zone 322 Voltage
37021 NATOMAS 230.00
229.7 kV
OLINDAW 37565
KESWICK 37558
SUTTER 37524
OBANION 37520
ELVERTAW
ORANGEVL
WHITEROK
FOOTHILL
LAKE
CAMINO S
ELVERTAS 37005
ELVERTAS 1.048
McCLELLAN
HURLEY W
TRCY PMP 1.024
GOLDHILL 0.973
NATOMAS 37021
NORTHCTY
HURLEY S
CARMICAL
HURLEY
PROCTER 1.004
STA. A
MID CTY
EAST CTY
STA. B
HEDGE
STA. D
SOUTHCTY
BRIGHTON 30348
LOCKFORD 30482
CAMPBELL
LLNL
TRCY PMP 37585
HURLEY W
POCKET
ELKGROVE
RNCHSECO
BELLOTA 30500
WESTLEY
TRACY
TESLA D
TESLA E
COTTLE A
COTTLE B
TCY MP1
General Electric International, Inc. PSLF Program
MW/Pct
Tue Oct 16 14:41:40 2001
SMUD
rs05hs10, 2005 Heavy Summer Rancho Seco Generation Study Case
Rancho Seco Generation = 1000 MW, No FPLE Generation Plant
From Western FPLE Study Case 05hs-no-fple
BASE CASE
sac-gb4.drw
t.wrk
Rating = 1

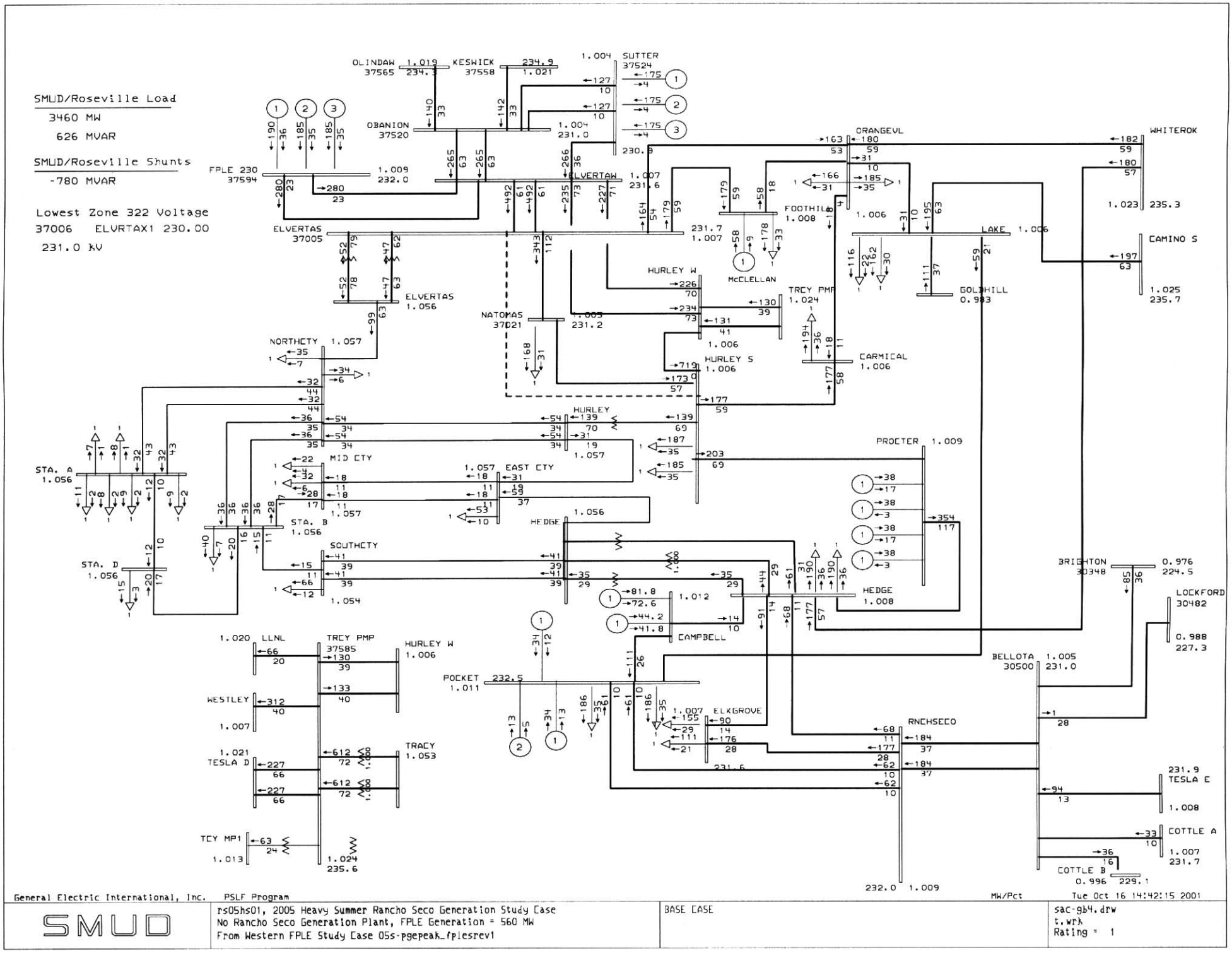
SMUD/Roseville Load
3460 MW
626 MVAR
SMUD/Roseville Shunts
-780 MVAR
Lowest Zone 322 Voltage
37006 ELVRTAX1 230.00
231.0 kV
OLINDAW 37565
KESWICK 37558
SUTTER 37524
OBANION 37520
FPLE 230 37594
ELVERTAW
ELVERTAS 37005
ELVERTAS 1.056
NATOMAS 37021
NORTHCTY
HURLEY W
HURLEY S
HURLEY
McCLELLAN
TRCY PMP 1.024
FOOTHILL 1.008
ORANGEVL
LAKE
GOLDHILL 0.983
WHITEROK
CAMINO S
CARMICAL 1.006
PROCTER 1.009
STA. A 1.056
STA. B 1.056
STA. D 1.056
MID CTY
EAST CTY
SOUTHCTY
HEDGE
HEDGE 1.008
CAMPBELL
BRIGHTON 30348
LOCKFORD 30482
BELLOTA 30500
RNCHSECO
ELKGROVE
POCKET 232.5
LLNL
TRCY PMP 37585
WESTLEY
TESLA D
TRACY 1.053
TCY MP1
TESLA E
COTTLE A
COTTLE B
General Electric International, Inc. PSLF Program
MW/Pct
Tue Oct 16 14:42:15 2001
SMUD
rs05hs01, 2005 Heavy Summer Rancho Seco Generation Study Case
No Rancho Seco Generation Plant, FPLE Generation = 560 MW
From Western FPLE Study Case 05s-pgepeak_fplesrev1
BASE CASE
sac-gb4.drw
t.wrk
Rating = 1

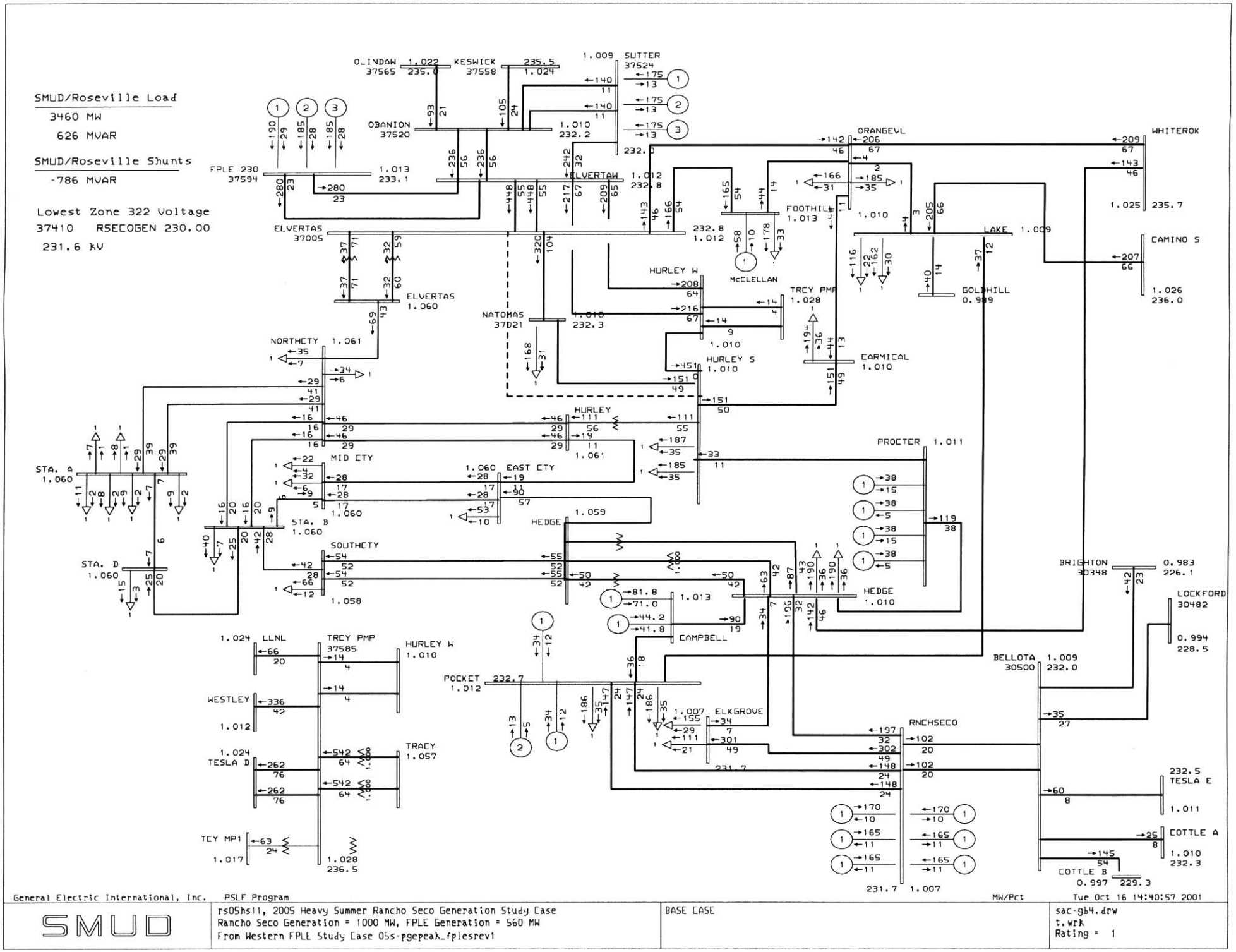
SMUD/Roseville Load
3460 MW
626 MVAR
SMUD/Roseville Shunts
-786 MVAR
Lowest Zone 322 Voltage
37410 RSECOGEN 230.00
231.6 kV
OLINDAW 37565
KESWICK 37558
SUTTER 37524
OBANION 37520
FPLE 230 37594
ELVERTAW
ELVERTAS 37005
ELVERTAS 1.060
NATOMAS 37D21
NORTHCTY
HURLEY W
McCLELLAN
TRCY PMP 1.028
HURLEY S 1.010
CARMICAL 1.010
HURLEY
MID CTY
EAST CTY
STA. A 1.060
STA. B 1.060
STA. D 1.060
SOUTHCTY
HEDGE
CAMPBELL
POCKET 232.7
ELKGROVE
RNCHSECO
PROCTER 1.011
ORANGEVL
WHITEROK
FOOTHILL 1.013
LAKE 1.009
GOLDHILL 0.989
CAMINO S
BRIGHTON 30348
LOCKFORD 30482
BELLOTA 30500
TESLA E
COTTLE A
COTTLE B
LLNL
TRCY PMP 37585
WESTLEY
TESLA D
TRACY 1.057
TCY MP1
General Electric International, Inc. PSLF Program
MW/Pct
Tue Oct 16 14:40:57 2001
SMUD
rs05hs11, 2005 Heavy Summer Rancho Seco Generation Study Case
Rancho Seco Generation = 1000 MW, FPLE Generation = 560 MW
From Western FPLE Study Case 05s-pgepeak_fplesrev1
BASE CASE
sac-gb4.drw
t.wrk
Rating = 1