Energy Research and Development Division

FINAL PROJECT REPORT

Distribution System Constrained Vehicle-to-Grid Services for Improved Grid Stability and Reliability

California Energy Commission

Gavin Newsom, Governor

March 2019 | CEC-500-2019-027

PREPARED BY:

Primary Author(s):

Sunil Chhaya, PhD
Viswanath Ananth, PhD
Ramakrishnan Ravikumar
George Bellino
Norm McCollou
Arindam Maitra, PhD
Jamie Dunckley, PhD
Michael Bourton – Kitu Systems
Richard Scholer – Fiat Chrysler Automobiles Group
Eric Cutter – Energy and Environment Economic
Charlie Botsford – AeroVironment, Inc.,

Prime Contractor
Electric Power Research Institute (EPRI), Inc.
3420 Hillview Avenue
Palo Alto, CA 94304
Phone: 650-855-2000 | Fax: 650-855-2721
http://www.epri.com

Contract Number: EPC-14-086

PREPARED FOR:
California Energy Commission

Matthew Fung, P.E.
Project Manager

Aleecia Gutierrez
Office Manager
ENERGY GENERATION RESEARCH OFFICE

Laurie ten Hope
Deputy Director
ENERGY RESEARCH AND DEVELOPMENT DIVISION

Drew Bohan
Executive Director

DISCLAIMER

This report was prepared as the result of work sponsored by the California Energy Commission. It does not necessarily represent the views of the Energy Commission, its employees or the State of California. The Energy Commission, the State of California, its employees, contractors and subcontractors make no warranty, express or implied, and assume no legal liability for the information in this report; nor does any party represent that the uses of this information will not infringe upon privately owned rights. This report has not been approved or disapproved by the California Energy Commission nor has the California Energy Commission passed upon the accuracy or adequacy of the information in this report.

ACKNOWLEDGEMENTS

The project team gratefully acknowledges the cooperation, support and active collaboration from EVSA project being overseen by California Public Utilities Commission (CPUC) and conducted by Honda R&D America, Nuvve, University of Delaware and EVGo. Also, the project would not have been possible without site operation and integration assistance and support provided by University of California, San Diego.

Support and guidance provided by the project Technical Advisory Committee is also acknowledged. The TAC included Satoru Shinzaki (Honda), Justin Regnier (CPUC), Ed Cazalet, PhD (TeMix, Inc), Peter Klauer (California ISO), Rajit Gadh, PhD (UCLA), Josh McDonald, Jordan Smith (SCE), Hank McGlynn (SAE, Aeych Inc), Lance Atkins (Nissan)

In addition, critical and timely help from these individuals is acknowledged:

- **EPRI**: Andra Rogers, John Halliwell, Elizabeth Hipps, Felicia Vargas, Cindy Toth, Cindy Colwell, Daniel Bowermaster, Phil Cochrane, Dr. H. Walt Johnson, Dr. Robert Entriken, Dr. Jouni Peppanen, Adam Diamant
- Fiat Chrysler Automobiles: Devesh Jain
- **Kitu Systems**, **Inc**: Ming Zeng, Gordon Lum
- **EVGo**: Kelsey Johnson
- **Honda R&D America**: Satoru Shinzaki, Kenichi Murakami, Robert Uyeki, Ryan Harty
- **Nuvve, Inc**.: Timothy McGee
- **AeroVironment, Inc** (now Webasto): Alec Brooks, PhD
- **Energy & Environment Economics:** Jonathan Donadee (now at LLNL), Robbie Shaw, Oliver Garnett
- MaxGen Services: Brent Larsen

PREFACE

The California Energy Commission's Energy Research and Development Division supports energy research and development programs to spur innovation in energy efficiency, renewable energy, advanced clean energy generation, energy-related environmental protection, energy transmission and distribution and transportation electrification.

In 2012, the Electric Program Investment Charge (EPIC) was established by the California Public Utilities Commission to fund public investments in research to create and advance new energy solutions, foster regional innovation and bring ideas from the lab to the marketplace. The California Energy Commission and the state's three largest investor-owned utilities – Pacific Gas and Electric Company, San Diego Gas & Electric Company and Southern California Edison Company – were selected to administer the EPIC funds and advance technologies, tools, and strategies that provide benefits to their electric ratepayers.

The Energy Commission is committed to ensuring public participation in its research and development programs that will promote greater reliability, lower costs, and increase safety for the California electric ratepayer. Objectives of the Energy Commission research and development programs include:

- Providing societal benefits.
- Reducing greenhouse gas emission in the electricity sector at the lowest possible cost.
- Supporting California's loading order to meet energy needs first with energy efficiency and demand response, next with renewable energy (distributed generation and utility scale), and finally with clean, conventional electricity supply.
- Supporting low-emission vehicles and transportation.
- Providing economic development.
- Using ratepayer funds efficiently.

Distribution System Constrained Vehicle to Grid Services for Improved Grid Stability and Reliability is the final report for the Distribution System Constrained Vehicle to Grid Services for Improved Grid Stability and Reliability project (Agreement Number EPC-14-086) conducted by Electric Power Research Institute, Inc. The information from this project contributes to and supports the objectives of the Energy Research and Development Division's EPIC Program.

For more information about the Energy Research and Development Division, please visit the Energy Commission's website at www.energy.ca.gov/research/ or contact the Energy Commission at 916-327-1551.

ABSTRACT

This report describes the design, development, integration, and demonstration (including the valuation aspects) of plug-in electric vehicles capable of providing vehicle-to-grid services using open standards-based communication and control protocols. This project is the first ever end-to-end system implementation, demonstration, and application of the Society of Automotive Engineers standards suite addressing distribution and localized integration of vehicle-to-grid capable vehicles.

Mainline automotive manufacturers Fiat Chrysler Automobiles and Honda Motor provided vehicles equipped with on-vehicle grid-tied bidirectional power conversion systems, and AeroVironment Inc., an established credible electric vehicle supply equipment developer and manufacturer, also participated in this project. The Electric Power Research Institute designed the Transformer Management System, which constrains monitoring and control of the vehicle-to-grid operation to the local transformer and facility distribution service drop.

The project focused on facility demand management, local and macro distribution system supply balancing, and reverse power flow applications. Use cases addressed primarily peak shaving and renewables ramping support. The research team developed and used a variety of distribution and macro level valuation tools to create a comprehensive valuation assessment of vehicle-to-grid capable vehicles on California's distribution system. The research team validated the open standards-based approach for providing end-to-end cybersecure integration of scalable on-vehicle, grid-interconnected, and bidirectional conversion systems. The project identified the regulatory interconnection requirement limitations and provided recommendations for how to accommodate this new class of distributed energy resource on the California distribution system.

This project is the first step in establishing rules for interoperability of the communications and controls, and in integrating the power system at the point of common coupling. The technical and valuation results and analysis provided in this report recommend further extending the development of this approach to explore its commercialization potential.

Keywords: vehicle-to-grid (V2G), integration, VGI, SAE J2836/3, SAE J2847/3, J2931/4, J3072, IEEE 2030.5 (SEP 2.0)

Please use the following citation for this report:

Chhaya, Sunil, Norman McCollough, Viswanath Ananth, Arindam Maitra, Ramakrishnan Ravikumar, Jamie Dunckley – Electric Power Research Institute; George Bellino – Clean Fuel Connection, Eric Cutter, Energy & Environment Economics, Michael Bourton, Kitu Systems, Inc., Richard Scholer, Fiat Chrysler Automobiles, Charlie Botsford, AeroVironment, Inc., 2019. *Distribution System Constrained Vehicle-to-Grid Services for Improved Grid Stability and Reliability*. California Energy Commission. Publication Number: CEC-500-2019-027.

TABLE OF CONTENTS

Page

ACKNOWLEDGEMENTS ..... **i**

PREFACE ..... **iii**

ABSTRACT ..... **v**

TABLE OF CONTENTS ..... **vii**

LIST OF FIGURES ..... **ix**

LIST OF TABLES ..... **x**

EXECUTIVE SUMMARY **11**

Introduction 11

Project Purpose 12

Project Process 13

Project Results 14

Technology/Knowledge Transfer/Market Adoption 15

Benefits to California 16

CHAPTER 1: Project Importance **17**

Background 17

Objectives 17

CHAPTER 2: System Requirements, Design and Technology Development **19**

System Requirements 19

Transformer Management System 20

Electric Vehicle Supply Equipment System 20

Plug-in Electric Vehicles 21

System Design 21

Technology Development 25

Vehicle-to-Grid Communications and Control System Development 26

Summary 27

CHAPTER 3: Technology Integration, Deployment, and Testing **29**

System Software 29

Transformer Management System 30
Energy Meter Sub-system 30
Electric Vehicle Supply Equipment Sub-system 31
Vehicle Sub-system 31
Software System Overview 31
System Deployment and Demonstration 34
Functional End-to-End System Integration 34
Purpose 34
Use Cases 35
Scenario Definitions 36
Input Variables 36
System Commissioning 37
Plug-in Electric Vehicle Management Test 40
Purpose 41
System Lab Testing Prior to Deployment (Electric Power Research Institute) 41
System Lab Testing Prior to Deployment (University of Delaware) 41
Data Collection and Technology Performance Analysis 48
Scenario Test Plan 48
Scenario Test Implementation 53
Transformer Monitoring System Overview 54
CHAPTER 4: Project Benefit Analysis 58
Grid and Ratepayer Benefits of Distribution Aware Vehicle-to-Grid Capable Plug-in Electric Vehicles 59
Modelling Approach 60
Benefits for California Ratepayers 77
Conclusions and Recommendations 78
Caveats 79
CHAPTER 5: Technology Transfer, Key Lessons, and Future Work 80
Technology/Knowledge Transfer 80
Reporting 80
Key Lessons 82
Scope for Future Work 84

LIST OF ACRONYMS **86**

REFERENCES **90**

LIST OF FIGURES

Figure 1: System Configuration 19
Figure 2: IEEE2030.5 Function Sets 21
Figure 3: Transformer Management System 22
Figure 4: Premise Mounted Configuration 24
Figure 5: System Configuration Overview 26
Figure 6: End to End Communications Sequence between Vehicle-to-Grid System 27
Figure 7: Transformer Monitoring System Architectural Overview 28
Figure 8: Schematic of the Software Components of the System 29
Figure 9: IEEE2030.5 Applied Software Function Sets 32
Figure 10: Function Sets Utilized for SAE J3072 Control 33
Figure 11: Function Sets Used for Electric Vehicle Supply Equipment Load Management 33
Figure 12: Function Sets Utilized for Plug-in Electric Vehicle Load and Generation Management 34
Figure 13: Transformer Management System Installation and Connectivity 38
Figure 14: UCSD Upgraded Demonstration Site 38
Figure 15: Open Breaker Panel Showing TMS CT Connections 39
Figure 16: Foreground 75 VA Transformer and Electric Vehicle Supply Equipment 39
Figure 17: Vehicle Wake Up and Charging Time Sequence 43
Figure 18: Vehicle Wake Up and Discharging Time Sequences 44
Figure 19: Vehicle Charging/Discharging Transition Time Sequence 45
Figure 20: Sample Data Log File of Transactional Commands 46
Figure 21: Solar Curves for Summer and Winter, Sunny and Cloudy Days 50
Figure 22: Summer Day with Grid Support - Three Vehicle Schedule 51
Figure 23: Winter Day with No Grid Support - Three Vehicle Schedule 51
Figure 24: Duck Curve Modification Case A - Three Vehicle Schedule 52
Figure 25: Duck Curve Modification Case B - Three Vehicle Schedule 52
Figure 26: Transformer Protection Operating Profiles - Three Vehicle Schedule 53
Figure 27: Graphic of Excess PV Reduction and Peak Shaving 56
Figure 28: Vehicle Charge/Discharge Cycle Across Peak Solar and Peak Load Periods 56
Figure 29: Vehicle Charge/Discharge Peak Shaving Profiles 57
Figure 30: Visual Representation of the Random PEV Driving Pattern Algorithm 61
Figure 31: Three-day Snapshot of Energy Values in Climate Zone 4 in 2018 (Pacific Standard Time) 64
Figure 32: Average Monthly Avoided Cost in CZ4 in 2018 64

Figure 33: Average Monthly Avoided Cost in CZ4 by Hour of the Day in 2018 65
Figure 34: Average Hourly Energy Prices in 2030 – High Value Case 66
Figure 35: Average Hourly Energy Prices in 2030 – High Value Case 66
Figure 36: Relationship of Energy and Frequency Regulation Prices (Base Case) 67
Figure 37: Relationship of Energy and Frequency Regulation Prices (High Value Case) 67
Figure 38: Distribution Avoided Costs by Planning Area 68
Figure 39: Illustrative PEV Dispatch for a Single Day 71
Figure 40: PEV Dispatch During Solar Overgeneration 72
Figure 41: Constrained and Unconstrained PEV Dispatch 73
Figure 42: Levelized Costs and Benefits for Base Case PEV 74
Figure 43: Levelized Costs and Benefits for Base Case with AS 75
Figure 44: Levelized Costs and Benefits Under E3 High Case 75
Figure 45: Customer Control Cost and Benefits under Base Case Assumptions 76

LIST OF TABLES

Table 1: Summary of Driving Activity Profiles for Each PEV 62
Table 2: Components of Electricity Avoided Cost 62
Table 3: Summary of Methodology for Electricity Avoided Cost Component Forecasts 63
Table 4: Dispatch Approaches and Base Cases Run 69
Table 5: Dispatch Approaches and High Cases Run 70
Table 6: Summary of New Grid Value 77
Table 7: Summary of Incremental Benefit of V2G 77
Table 8: Potential Ratepayer Benefits in 2030 78
Table 9: Summary Lessons Learned Relative to Objectives and Accomplishments 84

EXECUTIVE SUMMARY

Introduction

Plug-in electric vehicles (PEVs) are automobiles with a rechargeable battery that provide energy for electronics systems and are recharged from the grid through a plug and a charger that is carried onboard or off-board. PEVs were introduced about 10 years ago, with the Chevrolet Volt and Nissan Leaf coming into the market around 2009. A variety of factors place the industry at an inflection point for the technology to take on a 15-30 percent market share in the next 15-20 years. These factors are:

- Rapid decline in battery costs: PEV technology advancements, primarily in battery technology and economics, have improved battery power, energy density, and cost. The fall in battery costs has been so dramatic (from $1,000/kilowatt-hour [kWh] in 2010 to $227/kWh in 2016) that it has completely changed the way automobile original equipment manufacturers (OEMs), also known as car companies, think about PEVs as a part of their product offerings.
- Competitive dynamics and business model innovation: Tesla's rise and commercial success against its competitors have led to the almost total electrification of high-end luxury class vehicles. Nearly every OEM has PEV products currently in the marketplace, and there are now more than 100 PEV offerings that range from small cars to vans and crossovers. This dynamic, coupled with the rise of mobility-based business models such as Uber and Lyft, opens up per-mile monetizing options of PEV ownership. As oil prices approach $66/barrel in early 2019 and with decreasing battery costs, PEVs are becoming a more economically viable transportation option compared to gasoline-fueled vehicles.
- Regulatory drivers: There were approximately 3 million PEVs globally at the end of 2017 with 40 percent in China, about 25 percent in the United States, and the balance in the rest of the world. China announced all new vehicles sold in the country by 2030 would be PEVs. The European Union (EU) is targeting 50 percent of the new vehicles sold in the EU to be electrified by 2030 and 100 percent by 2050. These international goals increase the production of PEVs globally, leading to further technology improvements and economies of scale.

In California, Assembly Bill 32 (Statutes of 2006, Pavley) drives the state's 2020 greenhouse gas requirements and has paved the way to widespread and accelerated introduction of PEVs. Governor Edmund G. Brown, Jr.'s Executive Order B-48-18 further codified the goal to electrify transportation to prepare the California grid for the introduction of 5 million EVs by 2030.

The California Public Utilities Commission's (CPUC) and the California Independent System Operator's (California ISO) *California Vehicle-Grid Integration (VGI) Roadmap* states that vehicle electrification and smart grid technology integration present an opportunity for PEVs to provide valuable services for reliable electricity grid management. Managed or "smart" charging strategies (shifting or reducing PEV charging load during high grid-load periods) are necessary to ensure that PEVs do not increase local or system peak load.

The "Distribution System Aware Vehicle to Grid Services for Improved Grid Stability and Reliability" project blends analysis, simulation, and implementation of an integrated vehicle-to-grid (V2G) system that is managed through a transformer management system. This integrated system used open standards and interoperable protocols to provide connectivity and communications between the grid and the PEV, operated as flexible energy storage, to enhance grid reliability and stability. This project breaks new ground for creating rules and test protocols for verifying electric V2G interoperability and compatibility with CPUC interconnection requirements.

Project Purpose

Under Assembly Bill 2514, the CPUC mandated that California investor-owned utilities establish a location for 1.325 gigawatts (GW) of storage by 2020 and install it by 2024. These rate-based investments (1.325GW at approximately $500/kWh) will cost California ratepayers $600 billion or more over the investment horizon. Five million PEVs, with the potential capacity to provide 3 GW to 10 GW of stored electricity for up to four to six hours, present a flexible resource that could be highly leveraged. However, for this to happen the grid integration technologies must be optimized for varying grid load conditions. In addition, the technologies that allow PEV storage to behave as stationary storage connected to the grid must provide a net economic benefit to the PEV owner. This means that valuation, market participation, and planning mechanisms that facilitate PEV integration in single or aggregated fashion need to be studied and approaches need to be identified to enable PEV-based grid services to alleviate specific grid conditions while meeting driver mobility needs. The available excess PEV battery storage used for grid support can offset some of the overall PEV ownership cost, improving the PEV owner's value proposition and alleviating the electric utility's need to add more energy storage.

This project explored and highlighted the capabilities of today's PEVs to integrate into grid operations and grid planning. The key project questions were:

1. How suitable are the available open standards to facilitate integration and interconnection of PEVs capable of bidirectional power flow? What are the operational and control strategies required to leverage their capabilities for grid benefits?
2. What is the value of such benefits net of cost?
3. What are some of the procurement planning and market mechanisms available, what is their current state, and how should PEVs be integrated into that landscape?

The large number of PEVs currently on California roads and the increases expected by 2030 will encourage electric utilities to seriously consider integrating PEVs into their programs. This could be accomplished through simple price tariffs, real time pricing, rebates for load management programs, or incentives for grid services participation. All these options are enabled through advanced technology development that can effectively reduce PEV operational costs. For fleet operators such as Uber, Lyft, and Maven, participating in energy markets, providing grid services, or simply using special electricity tariffs improve their operational economics.

This project's technology development and demonstration results provide an insight into how a PEV can be equipped with V2G technology. The project also demonstrates how these PEVs and their drivers can automatically provide grid services through V2G programs. The charging station, also called electric vehicle supply equipment, will charge any PEV regardless of manufacturer, but it can also relay driver charging preferences and grid information from V2G-capable PEVs to earn additional rebates and incentives.

Project Process

The project was conducted in four phases:

1. Requirements, design, technology development
2. Technology integration, deployment, test
3. Analytical assessment of value and possible avenues to integrate into utility planning process
4. Technology dissemination / transfer

Phase 1: Requirements, Design and Technology Development

This phase involved developing technical requirements into functional specification, interfaces, architecture, and system test plans. Individual team members designed, tested, and implemented hardware and software components to prepare for the demonstration. The research team developed and used emulators wherever possible to simulate the system surrounding the component to accelerate system integration and create baselines for the on-site demonstration.

Phase 2: Technology Integration, Deployment, and Testing

In this phase, AeroVironment and Kitu developed the electric vehicle supply equipment and control software, respectively; the University of Delaware (Honda) and Fiat Chrysler Automobile developed the on-vehicle software and hardware implementation while Iotecha completed the control card interface. The Electric Power Research Institute (EPRI) developed and integrated the transformer management system. The project team integrated the subsystems (PEV, electric vehicle supply equipment, and transformer management system) and tested the entire system at Fiat Chrysler's Auburn Hills facility. Finally, the entire system was integrated at the University of California, San Diego campus test site where test and data collection activities were performed.

Phase 3: Value Assessment, Planning Pathways Assessment

The EPRI and E3 teams studied the project's value of grid services using a variety of techniques. The teams used a cost/benefit framework and simulation tools to analyze the value potential possible from V2G-capable PEVs in a variety of scenarios that were demonstrated at the test site.

Researchers performed the planning pathways assessment by studying the ongoing planning activity managed by the CPUC, California ISO, and Energy Commission to identify what type of

operational, scenario planning, and modeling assumptions would need to be created for this new class of flexible loads and resources to create procurement requirements for transmission and distribution system planners.

Phase 4: Technology Dissemination and Transfer Activities

The team performed numerous technology transfer activities as a part of this project to a broad range of stakeholders through multiple EPRI utility membership engagements, regional and national conferences, participation in standards development organization work groups, and application sharing of this technology into other Energy Commission and federally funded PEV smart grid integration research and development programs.

Project Results

This project implemented an open standards-based, on-vehicle V2G capable technology that met cybersecure, end-to-end requirements specified by industry standards associations (Society of Automotive Engineers and the Institute of Electric and Electronics Engineers). It verified the open standards-based requirements, use cases, and functional performance. The project team collected use case data from the integrated system software and use case parameters that included, but were not limited to, message verification and responsiveness, PV over-generation balancing, reverse power flow to mitigate peak load ramping, and demand response.

The use case implementation verified actual system performance with the assumptions initially made during value assessment using steady-state conditions. The charge or discharge cycles for each use case lasted for several 15-minute intervals, up to two hours. The implemented PEV use cases responded within the required one to three minutes based on the communication verification processing delays. This team validated that the assumptions used for the vehicles were accurate and met their performance limits. The verified testing results did not require changes to the value assessment modeling.

The diverse nature of California's distribution system necessitates that similar studies be conducted in the future for a wider range of selected scenarios across broader types of distribution system segments. Performing such studies across more scenarios, and analyzing hundreds of actual vehicles and their charging behavior across California, will ensure that V2G benefits are thoroughly validated.

The project also identified gaps in the technology application that will require further investigation and development. The primary gaps are:

- Acceptance and adoption of interconnection requirements for onboard inverters that interact with utilities for application to the distribution grid interconnection requirements (Rule 21) as a route to commercialization. Rule 21 application to V2G is an ongoing discussion under the CPUC's Rule 21 proceeding, R.17-07-007.
- Capability of on-vehicle V2G inverters to meet Rule 21 revisions relative to incorporation of the technical requirements for smart inverter communications and advanced inverter functions per applicable Institute of Electric and Electronics Engineers standards.

- Synchronization between different OEM vehicles due to local site circuit voltage and frequency transients that may cause interruptions in communications.
- Reducing signal response times to support ancillary fast response services such as frequency regulation.

The project created distribution system assessment models as well as valuation mechanisms and tools that can be used to assess value to the grid by deploying this technology at scale. The project also implemented value-added use cases that maximize the benefits from using V2G capable vehicles in a manner that balances customer need for mobility with grid needs in a customer-centric approach.

Technology/Knowledge Transfer/Market Adoption

The transfer of technology information from this project has been extensively disseminated across utilities, automakers, California state agencies (Energy Commission and CPUC), United States Department of Energy constituents, and electric vehicle infrastructure industry stakeholders. EPRI and the project participants continue to share the project results through engagement in regional and national conferences, standards development organizations, and relative technical working groups. The project progress and results were included in briefings to the Technical Advisory Committee of the CPUC/NRG Electric Vehicle Storage Accelerator (EVSA) Project with Nuvve (executed under the NRG/EVgo Settlement with the CPUC), and to Energy Commission and CPUC staff. Nuvve provided coordinated support from University of Delaware and Honda to develop and demonstrate their implementation of V2G communications and control functionality in this project. This V2G project was also presented at the United States Department of Energy Vehicle Technologies Office Annual Merit Review meeting for each of the past two years.

Project partners Honda and Fiat Chrysler are continuing development and implementation of project-developed V2G technology and communications/control into their PEV product designs, and they intend to pursue producing and commercializing V2G-capable electric vehicles. The project team and its partners are also promoting the findings through the CPUC Smart Inverter Working Group to potentially establish utility acceptance criteria for on-vehicle inverters that have the ability to connect to the grid.

Additionally, this project's developed communications technology and module processor hardware is being leveraged in other Energy Commission and United States Department of Energy current ongoing V2G technology integration and development projects (Energy Commission EPC 16-054, DOE EE0007792, and DOE EE0008352). These projects are providing a continuum for development, commercialization, and use of V2G as a distributed energy resource. Honda is formally interjecting and advocating that V2G be addressed in the upcoming Multi-Agency California VGI Roadmap Update being coordinated by the Energy Commission, CPUC, and California ISO.

Benefits to California

For California ratepayers, PEVs that are primarily acquired and used by private consumers and fleets for zero emission mobility can also be used to enable improved grid functionality by improving the grid's stability and reliability, and by enabling broader penetration of intermittent renewables. The value analysis conducted by the project team shows a cumulative maximum benefit to the grid (net of cost increment) ranging between $450/year per vehicle to $1,850/year per vehicle. Since ratepayers are being required to provide some support for the public PEV charging infrastructure, some of these benefits can defray or defer some of the infrastructure upgrade costs, thereby limiting upward electricity rate pressure. This rate increase limitation is critical, especially for disadvantaged community and low-income customers. A large-scale shift to electrified transportation from petroleum-based transportation will significantly improve transportation's environmental footprint and help the State of California meet the SB 32 goal of achieving 40 percent below 1990-equivalent greenhouse gas emissions by 2030.

Finally, the technical feasibility of and the potential for value creation from engaging V2G capable PEVs for grid services are significant enough to warrant focusing on the following key activities in the future:

- Developing at-scale pilots engaging large number of customer-owned vehicles that are V2G equipped and are deployed to generate data at a scale that is statistically significant and worthy of being included into planning exercises.
- Creating detailed circuit level models to assess locational net benefits of V2G capable PEVs, enabling their participation into the California ISO Demand Response Provider process.
- Designing experiments to engage a broad number of customer segments, both retail and fleet. to understand best case value scenarios and corresponding operational rules for grid integration.
- Establishing a working group to draft and validate interconnection requirements for V2G capable PEVs to be screened as "generating resources" under California's Rule 21.
- Developing a broad-based value assessment using the data generated from a scale pilot that enables more precise estimation of value to grid that is geospatially and temporally characterized for a range of customer segments.

CHAPTER 1: Project Importance

Background

This project developed and demonstrated an end-to-end, vehicle-to-grid (V2G) integrated system that is both distribution system and independent system operator (ISO) aware. The project will develop and demonstrate a fully functional, secure, reliable, open standards-based and interoperable grid-interactive communication technology and interfaces for plug-in electric vehicles (PEVs) to support V2G services that factor in end-to-end information processing.

V2G technology has been around for a long time with several ongoing pilots. These pilots all focus on a large number of PEVs congregated around a substation acting in unison. All the knowledge derived from these experiments is of limited use in real-world scenarios, as the scenario studied is highly unlikely to occur, because even fleet garages are rarely going to be in close proximity to substations. Real world scenarios would involve V2G capable PEVs scattered around the distribution grid, sending and receiving power through the neighborhood transformer. In the United States, an average personal vehicle is on the road only four to five percent of the day, which means that for a great majority of the day the vehicles are parked and can be used to provide electricity storage or ancillary grid services.

The key to dual-purposing the vehicle battery for a storage application is making sure that the customer has a full battery charge when needed for transportation, and that the utilities have the ability to use the battery for storage charge and discharge as needed.

The capability to transfer energy from a vehicle to the grid is only a small part of the expected overall technical challenge of full implementation of V2G. In order to realize a full V2G implementation, a yet-to-be-developed information technology solution must be developed which provides high-level control capable of aggregating a large number of geographically dispersed vehicles such that they can be considered a single energy resource while taking into account each individual vehicle owner's comprehensive input.

The technology being developed will focus on a V2G system that is safe, outage-immune, and grid-aware through real-time transformer monitoring and access to distribution system information. The contractor shall design and implement Society of Automotive Engineers (SAE) J3072 protocol that enables grid/vehicle communications that implement SAE J2847/3 messaging, to allow the V2G capable PEVs to connect, communicate and then provide value-added grid services.

Objectives

The objectives of this project are to:

- Develop and demonstrate end-to-end integrated system design that is distribution grid-aware and is capable to make V2G scale-up more robust and responsive to real-time grid

conditions from the local transformer and the distribution system operator (DSO) while delivering value-added services to the distribution grid as well as to ISOs.

- Develop and demonstrate the grid-tied V2G system that is capable of being outage-immune and grid-compliant. This will be modelled and has no impact on the system design.
- Demonstrate distribution grid awareness through connectivity to locational demand response (DR) dispatch to be used as an indicator of distribution system congestion status that can be disaggregated through the central aggregation platform (i.e. Open VGI Platform).
- Demonstrate V2G system capability and apply distribution capacity constraints while delivering ISO and DSO grid services.

CHAPTER 2: System Requirements, Design and Technology Development

System engineering principles were applied to frame the project execution, starting with requirements, followed by architecture and interfaces, appropriate standards and then the detailed design of the system as well as derivation of specifications for each component, including the PEV, the electric vehicle supply equipment (EVSE) and transformer management system (TMS).

System Requirements

The system consists of a single TMS and for each customer premise a power line communication (PLC) to WiFi Gateway, an EVSE, and a PEV, as shown in Figure 1.

The basic requirements for implementing the system configuration includes the implementation of the V2G applied IEEE2030.5 server/client function sets between the Transformer Management System, the Electric Vehicle Supply Equipment, and the Plug In Electric Vehicle, and the development of the required TMS control algorithm application software. The high level list of delineated requirements for implementing the system configuration are provided in Appendix A Section 2 including the system architectural requirements, the EVSE architectural requirements, and the TMS application requirements.

Figure 1: System Configuration

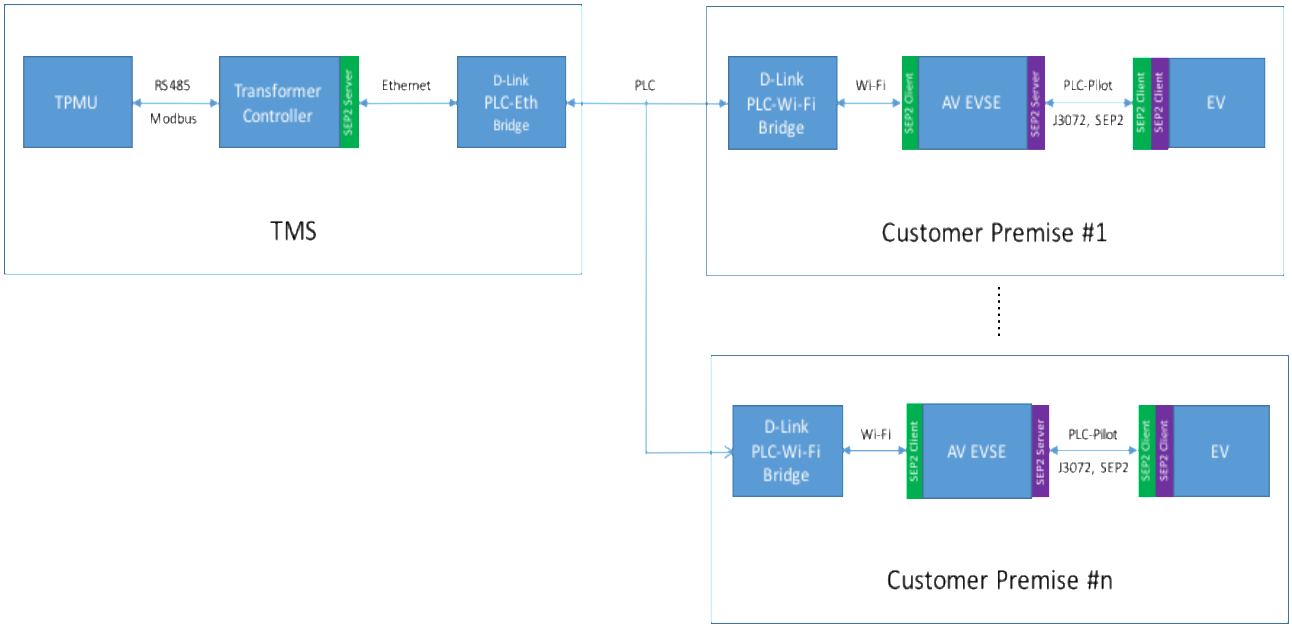

Source: EPRI

Transformer Management System

The premise for the system configuration implementation is the development of the TMS consisting of the Transformer Power Measurement Unit (TMPU) and the Transformer Controller (TC). The TPMU shall measure the voltage, current, and phase of the secondary output of the local distribution transformer and send the data to the Transformer Controller. The TC will act as a IEEE2030.5 server for communication to the EVSE and PEV at each customer premise and will incorporate the algorithm and control application software for determining the load balancing criteria across multiple PEVs based on distribution system (i.e. renewables generation, peak demand, transformer capacity, voltage/frequency excursions, etc.) and PEV customer constraints (i.e. preferences for time charge is needed and minimum State of Charge (SOC)).

The TMS module has the following IEEE2030.5/SEP 2 server function sets. Each of these servers control clients in the EVSE and/or PEV.

- Device Capability (DCAP) Server – TMS device capabilities for use by EVSE and PEV.
- Demand Response Load Control (DRLC) Server – Controlling Demand Response Client in the EVSE.
- Distributed Energy Resource (DER) Server – Controlling DER Client in the PEV.
- End Device (EDEV) Server – Controlling the EDEV clients in EVSE and PEV.
- PEV Power Status (EPwrStat) Server – For PEV state information.
- Flow Reservation Server – Controlling the charging of PEV.
- Function Set Assignment (FSA) Server – Controlling FSA Clients in EVSE (DR) and PEV (DER).
- Time Server – Serving Time Clients in EVSE and PEV.

Electric Vehicle Supply Equipment System

The EVSE will incorporate the IEEE2010.5 client/server function sets for providing the communications bridge between the TMS and the PEV. The EVSE will incorporate the J3072 on vehicle grid tied inverter authentication protocol and the J1772 compliant charge coupling control pilot and proximity detection safety requirements. The EVSE also incorporates the J2931/4 GreenPHY power line communications (PLC) link to the PEV providing the IEEE2030.5 bridge from the TMS to the PEV. Communications between the EVSE and the TMS can be PLC, wifi, cellular, or a combination depending on the distribution system and premise local and wide area networks.

EVSE module incorporates the IEEE2030.5 server function sets that control clients in the PEV. The client function sets are controlled by the respective function set servers in the TMS module.

Plug-in Electric Vehicles

The PEV will incorporate a module with the IEEE2030.5 client function sets for V2G control communications using the PLC link provided through the EVSE to the TMS. .The PEV module will also incorporate the J3072 protocol for on vehicle inverter V2G or reverse power flow authentication and authority. Once the authentication is established the PEV will then initiate communications with the TMS using the IEEE2030.5 protocol.

The PEV module incorporates the IEEE2030.5 client function sets which are controlled by the respective servers in the TMS module. The end device (EDEV) client interacts with the EDEV server on the EVSE for J3072 authorizations to connect and for authorization to discharge to the grid.

The system communications between the TMS, EVSE, and PEV uses the IEEE2030.5 Server/Client Functions Sets as shown in Figure 2.

Figure 2: IEEE2030.5 Function Sets

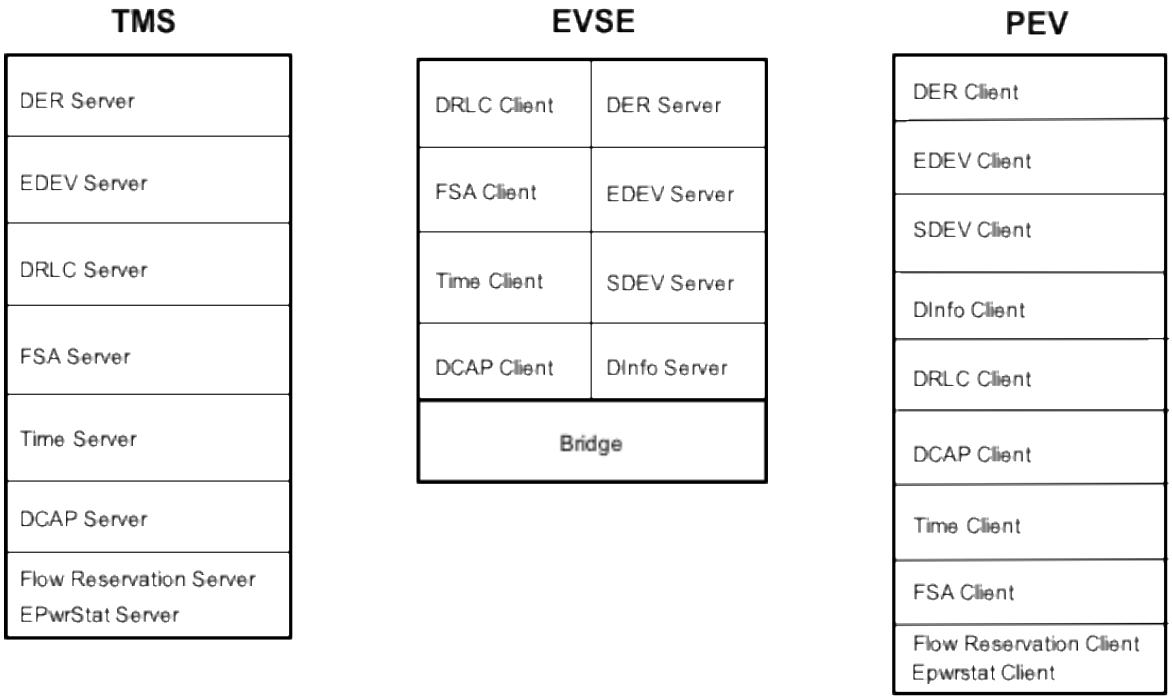

Source: Kitu Systems

System Design

The system consists of four separate interconnected blocks:

- TMS
- PLC to WiFi Gateway (Gateway)
- EVSE
- PEV

There is one TMS mounted at the local distribution transformer which is connected with up to eight premises, each premise with a single gateway, an EVSE, and PEV.

Design Architecture Requirements

There are two segments of hardware components to the system

1. TMS mounted at the local distribution transformer (Figure 3).
    - Measures the total power to all of the premises served.
    - Communicates to each premise served by the transformer over the powerline.
    - Manages each PEV or EVSE load at each premise to balance the transformer load.
2. Premise mounted systems/equipment – See Figure 4.
    - PLC gateway to WiFi access point.
    - WiFi Enable EVSE which can throttle the PEV charging or bridge to the PEV.
    - SAE J3072 Compliant PEV with bi-direction inverter (default to EVSE load control if no PEV communications capability).

Figure 3: Transformer Management System

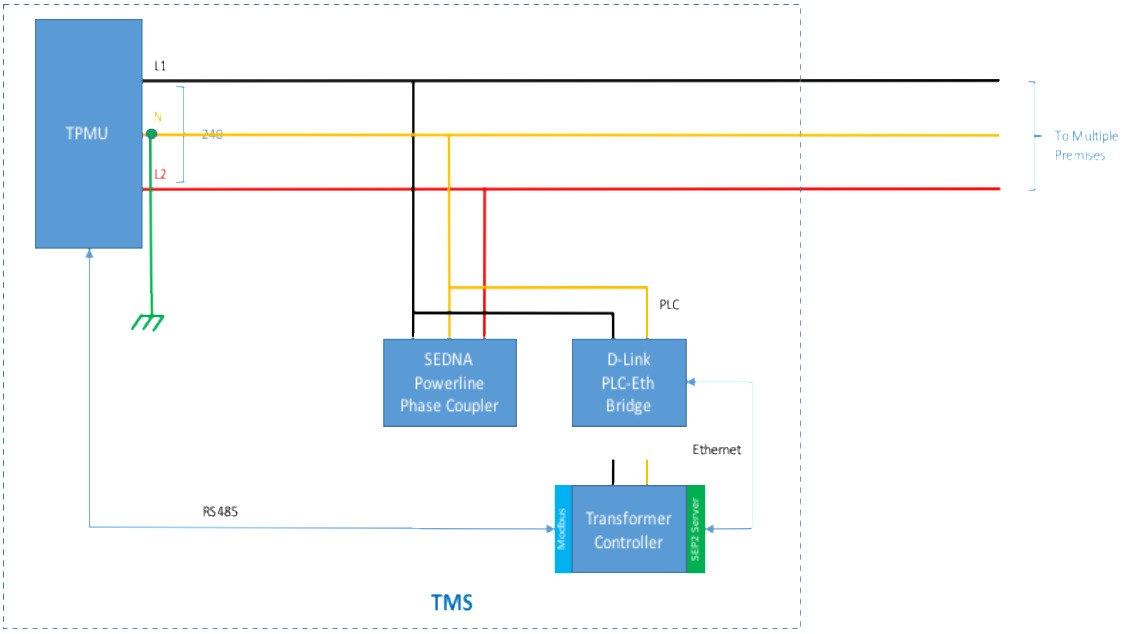

Source: Kitu Systems

Transformer Management System Requirements

There are three major elements for the TMS:

1. Transformer Power Measurement Unit (TPMU)
    - Measures voltage, current, and phase
    - RS485 communications interface to the transformer controller (TC)
2. Transformer Controller

    - Linux-based open router platform (commercially available)
    - RS485 communications interface to the TPMU
    - Communications to each premise's EVSE(s) and PEV(s) via HomePlug AV adaptor
    - Performs energy management algorithm
3. HomePlug AV Ethernet adaptor
    - Ethernet connected to the TC
    - Communicates to all premise connected Gateways via the premise drop

The TMS controls each of the PEV charging sessions based upon following:

- Transformer load – measured by the TMS
- Use preferences, charge required and departure time – obtained from PEV using flow reservation
- Minimum battery level to be maintained – obtained from PEV information using DEVINFO
- Battery capacity and charge rate – obtained from PEV information using DEVINFO
- Price – held by the TMS (but may be obtained from utility or aggregation server)
- PEV type (charge, reverse power) - obtained from PEV information using DEVINFO
- Time of day – held by TMS
- Historical data – held by TMS
- Solar production/weather forecast – potentially obtained from Internet

The TMS will use a combination of the information above and using the developed algorithms to calculate whether to charge or discharge the PEV either directly by using a DER Command, flow reservation, or via the EVSE load control.

The objective is to ensure that the PEV battery has the required charge level by the departure time. The TMS communicates to each premise over a common communication channel over the powerline drop to each premise using HomePlug AV. A phase coupler at the TMS is used to ensure that the data appears on both L1 and L2 within each premise.

Premise Mounted System Requirements

The premise mounted system consists of the Home Gateway, the EVSE, and the PEV (Figure 4).

Figure 4: Premise Mounted Configuration

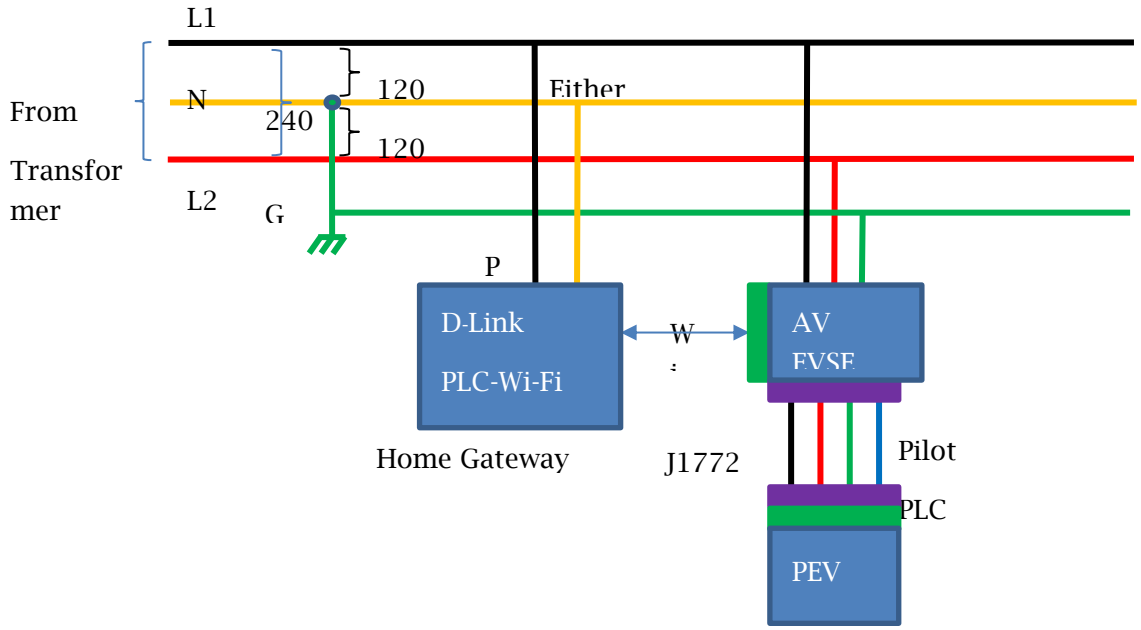

Source: Kitu Systems

Gateway

The gateway is a standard off the shelf product from DLINK that creates a WiFi Access point with WAN access using HomePlug AV. It receives IP data packets from the TC and provides a WiFi Access Point for that premise. The unit supports simple WiFi setup for easy connection to the premise EVSE.

The Gateway is installed at each premise and is plugged into L1 or L2. Its role is to convert the Data from the TMS over PLC and make it available over a WiFi Access point. An EVSE(s) may join the Access Point and discover the resources on the TMS.

Electric Vehicle Supply Equipment

The EVSE has three roles:

- Bridge the data communications to the PEV, if an intelligent PEV is attached
- Provide the interconnection parameters to PEV using SAE J3072
- Provide PEV load control using the SAE J1772 control if a non-intelligent PEV is connected and enable PEV charging

The EVSE communicates to the TMS as a WiFi Client to the Gateway. It uses WPS mode to discover and connect to the WiFi Access point for the premise. The EVSE communicates to the PEV using HomePlug-GP over the SAE J1772 Pilot wire as described in SAE J2931/1. The EVSE is a software client to the TMS and provides the IEEE2030.5 functionality for load control. The EVSE is a server to the PEV and hosts the information for the interconnections parameters. A means to be provided to input and store the parameters via a web server interface.

This project developed the electronics for an existing AeroVironment EVSE that adds a Linux Processor for software control of the EVSE and implemented the SAE J3072 authentication for the PEV on-board bi-directional inverter interconnection to the Grid.

The interface to the gateway is WiFi communications and the interface to the PEV is HomePlug-Green PHY (GP) over the J1772 Pilot to the PEV that complies with SAE J2931/4 - Broadband PLC Communication for PEVs.

The EVSE bridges the internet protocol (IP) data between the WiFi and the HomePlug-GP Interface for PEV communications via IEEE2030.5 client to the TMS.

Plug-in Electric Vehicle

The PEVs conform to the SAE standards. The PEV is a software client to the EVSE Server for obtaining the site interconnection as defined in SAE J3072 and the TMS Server for the data exchange for charging and discharging. The user parameters are obtained from the PEV for the TMS.

This project encompassed the integration of two different automaker PHEVs; a Honda Accord and a Chrysler Pacifica. Both having bidirectional power capability with on-board inverters that implement HomePlug-GP over the J1772 Pilot to the PEV in compliance with the following standards:

- SAE J2931/4 - Broadband PLC Communication for Plug-in Electric Vehicles
- SAE J3072 - Interconnection Requirements for Onboard, Utility-Interactive Inverter Systems
- SAE J2847/1 - Communication between Plug-in Vehicles and the Utility Grid
- SAE J2836/3 - Use Cases for Plug-in Vehicle Communication as a Distributed Energy Resource

The PEV provides the capability to control the user preferences for:

- State of charge (SoC) at departure.
- Departure time.
- Amount of battery participation for grid services (minimum SOC).

Technology Development

In the next step of the project, component technology development commenced once the requirements and design were complete. This included implementing the required changes to existing or development of new technologies altogether. For example, AeroVironment UL certified EVSEs were modified to add a control card that can implement both HomePlug GreenPHY (per SAE J2931/4) as the physical layer, along with WiFi to connect to the local area network, as well as SAE J3072 and IEEE2030.5 software to run on it so it can communicate with its surrounding systems. Three Fiat Chrysler Automobiles Pacifica PHEV vans and a Honda Accord PHEV were modified to include an on-board, 4-quadrant inverter that was grid-tied to allow both charging and discharging the on-vehicle batteries. In addition, totally new controller

hardware and software for local transformer distribution monitoring and control was synthesized with the defined functionality integrated into the TMS.

Vehicle-to-Grid Communications and Control System Development

The V2G communications system includes the development and integration of the IEEE2030.5 server/client function sets and application software into each device within the system (Figure 5), and the development of the TMS APP which provides the periodic algorithm tasks required to be executed in parallel with the IEEE2030.5 server functions. Appendix A Section 1 provides a high-level description of the pseudocode for the algorithm implementation and functionality requirements for the TMS. The information provides the control criteria per the parameters and constraints applied in the TMS algorithm for optimizing the utilization of V2G capable PEVs as an energy resource for load leveling and balancing across the transformer connected residential units, with the inherent priority to not compromise the PEV owner's prescribed State of Charge and time charge is needed constraints. An imperative is the ability to manage to charge and to discharge to mitigate the negative grid reliability effects from intermittent renewables generation (that is, "duck curve" ramping).

Figure 5: System Configuration Overview

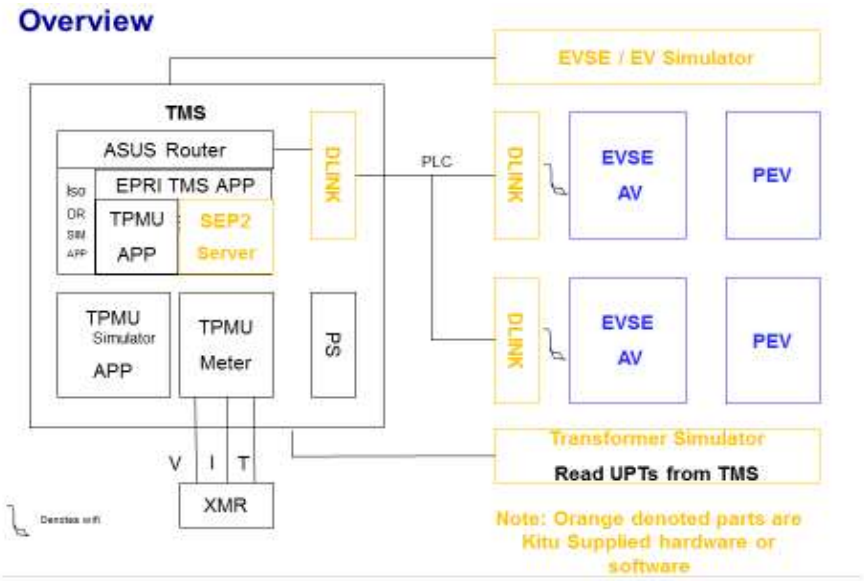

Source: EPRI

The sequencing diagram (Figure 6) reflects the individual devices in the V2G end to end communications design structure, the IEEE2030.5 function sets applied between the devices, and applied standards. The figure also reflects the interactive testing required to verify the integration and interoperability between the separately developed communications devices.

Figure 6: End to End Communications Sequence between Vehicle-to-Grid System

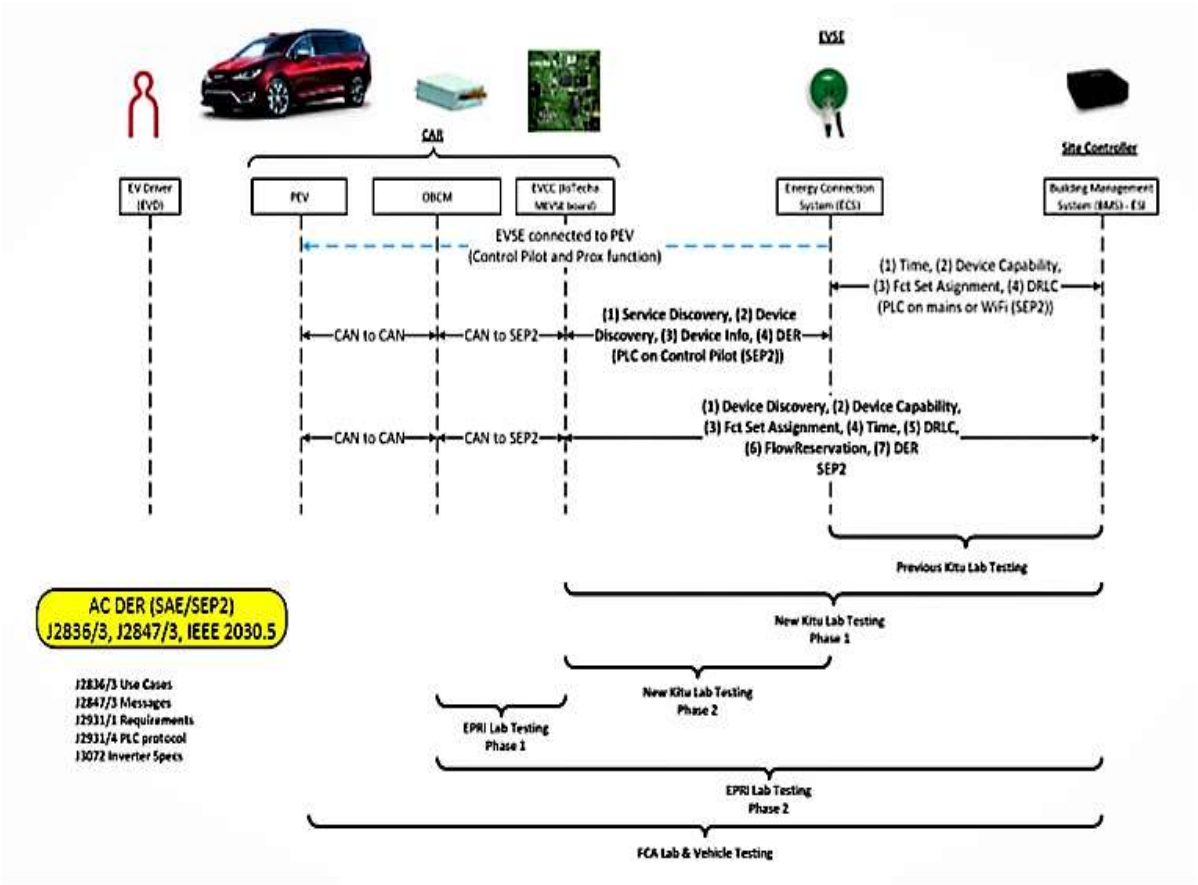

Source: EPRI

Figure 7 shows the TMS architectural overview with the two distinct data paths, one over WiFi from TMS to the EVSEs and then over PLC to complete a secure link between server (TMS) to Client (PEV), while the other over cellular network directly to the PEV to communicate with the driver via in-vehicle human-machine Interface.

Summary

The system design, architecture and technology development resulted in the implementation of an end to end cybersecure, standards-compliant V2G system as per SAE J3072, SAE J2836/3 and SAE J2847/3 implementing these application layer protocols over IEEE2030.5 base communications stack. The PLC link on the EVSE enabled implementation of SLAC (Signal-Level Attenuation Characterization) allowing each PEV to associate accurately with its corresponding EVSE. This setup was used for deploying the value-added use cases in the deployment and test phase to collect data.

Figure 7: Transformer Monitoring System Architectural Overview

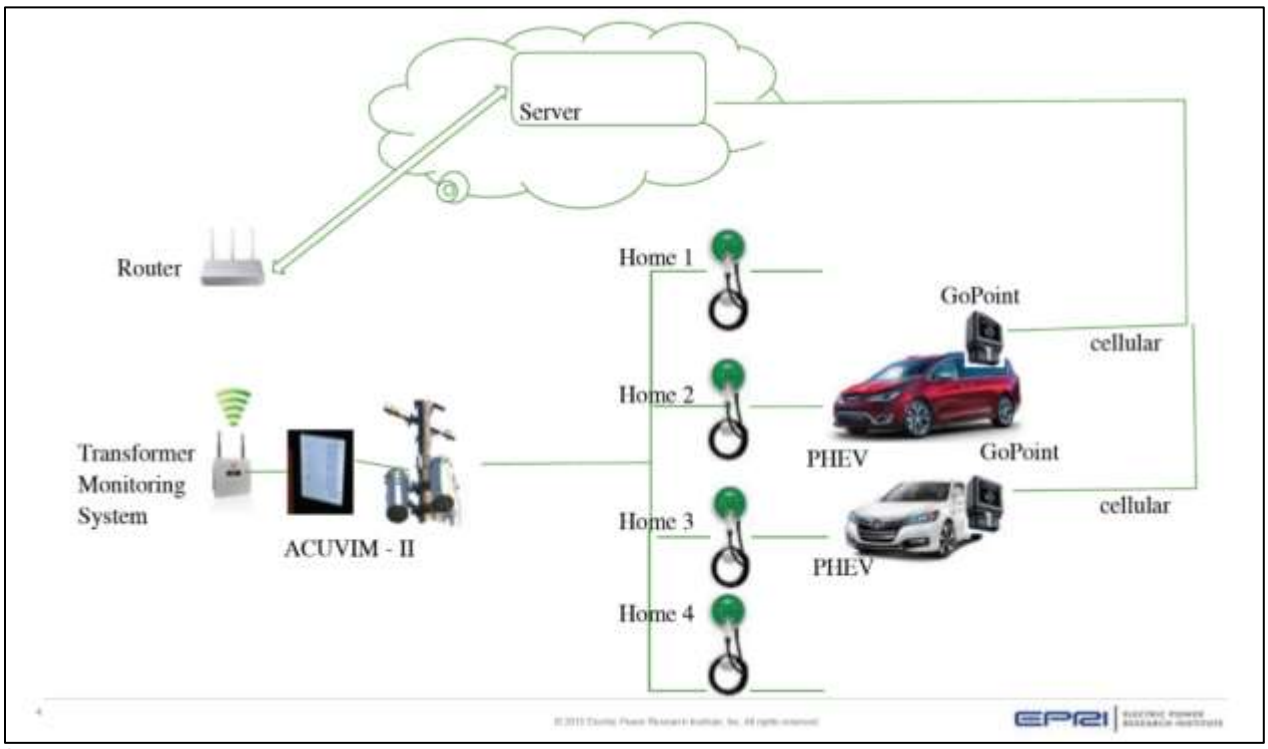

Source: EPRI

CHAPTER 3: Technology Integration, Deployment, and Testing

Once the components were put together, they needed to be tested for complying with their design requirements. This was done by first developing a test protocol and then testing each component to this test regime. This chapter summarizes both the plan as well as the testing process implementation, with the details presented in Appendix C.

System Software

The system consists of number of software components to support the IEEE2030.5/SEP 2.0 protocol and the J3072 protocol. Figure 8 details the major software components pertaining to the complete system view.

Figure 8: Schematic of the Software Components of the System

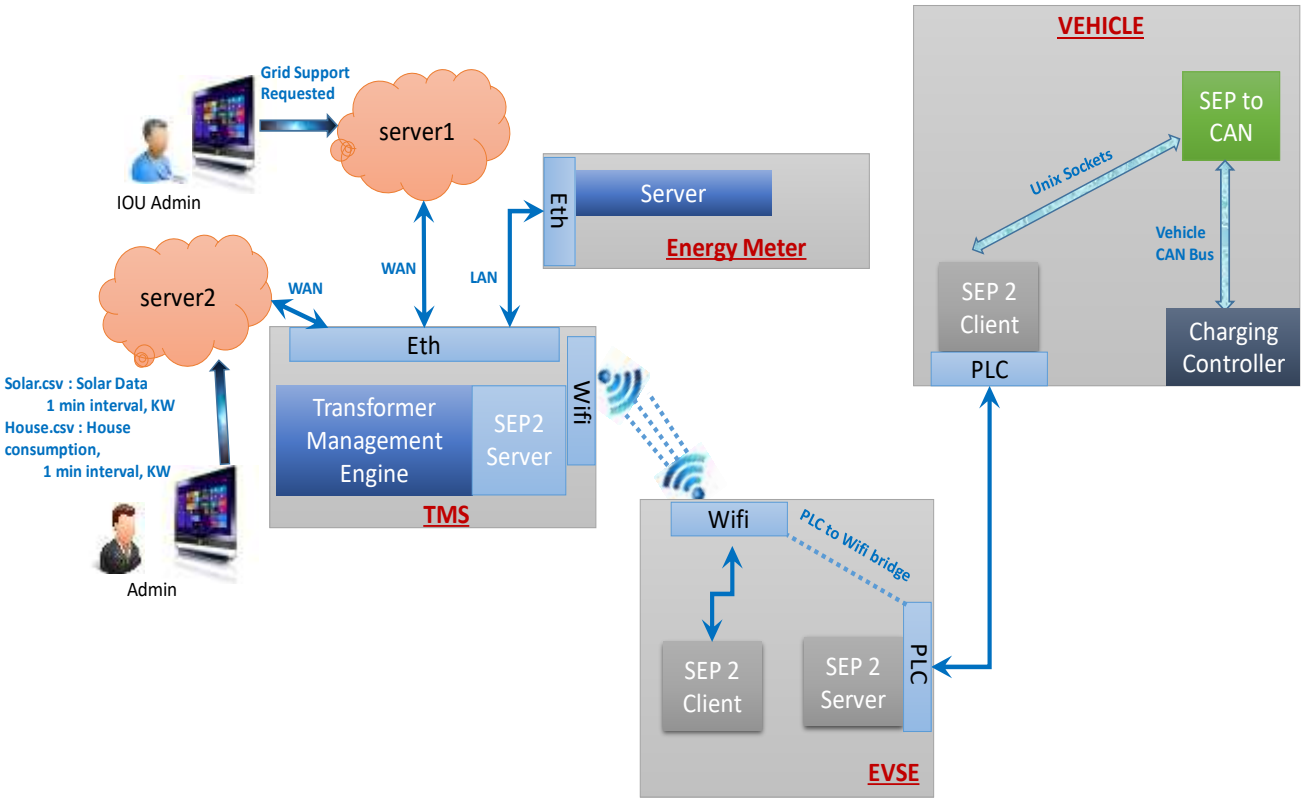

Source: EPRI

Transformer Management System

The TMS system component of the system consists of two parts, (1) the transformer management engine and (2) the SEP 2.0 server. The transformer management engine is responsible for the following functions:

- Schedule charging/ discharging based on the TMS algorithms
- Read the monitoring parameters from the Energy meter and upload it to the server for archival storage, and also provide input to the TMS algorithms.
- Read parameters about the vehicles from SEP 2.0 client and schedule discharge and charge commands in the SEP 2.0 server.

The SEP 2.0 server component of the TMS is the system that performs the following functions:

- SEP 2.0 authentications for the EVSE SEP 2.0 Client and Electric Vehicle SEP 2.0 Client.
- Retrieve information about the SFDI of the connected vehicle in SEP 2.0 messages from the EVSE
- Retrieve information about the status of vehicle (connected, disconnected, sleeping) connected to the EVSE from the EVSE SEP 2.0 messaging
- Process and parse Vehicle information being received from the SEP 2.0 client in the Electric Vehicle.

Vehicle information is spread over a number of messages, and parameters being gathered by this component are the current state of charge, target state of charge, charge rate, discharge rate and time the vehicles needs to be ready by.

- The SEP 2.0 subsystem implements the following IEEE2030.5 function sets. Each of these Servers control clients in the EVSE and/or PEV.
    - DCAP Server – TMS device capabilities for use by EVSE and PEV.
    - DRLC Server – controlling demand response client in the EVSE.
    - DER Server – controlling DER client in the PEV.
    - EDEV Server – controlling the EDEV clients in EVSE and PEV.
    - EPwrStat Server – for PEV state information.
    - FSA Server – controlling FSA clients in EVSE (DR) and PEV (DER).
    - Time Server – serving time clients in EVSE and PEV.

Energy Meter Sub-system

The energy meter subsystem monitors the voltage, current, power and third harmonic distortion at the transformer and stores it in Modbus registers. The server then provides access to this information when requested by any other software component.

Electric Vehicle Supply Equipment Sub-system

The SEP 2.0 Server of the EVSE Sub-system implements the J3072 protocol and informs the SEP 2.0 client in the Electric Vehicle if all systems are running normally, thus enabling a protective messaging layer to prevent charging/ discharging in events of failure or other issues. The SEP 2.0 server authenticates the SEP 2.0 client in the vehicle before sending it the signal to charge or discharge. This component is also responsible for maintaining the PLC to Wifi bridge connectivity.

The SEP 2.0 client in the EVSE sub-system periodically gathers the status of the vehicle connected to the EVSE and reports this status to the TMS. The components in the EVSE support the IEEE2030.5 function sets. The Server Function Sets control clients in the PEV and the Client function sets are controlled by the respective Servers in the TMS module.

Vehicle Sub-system

The SEP 2.0 client of the vehicle sub-system is responsible for authenticating with the EVSE using the J3072 protocol and reporting the vehicle parameters to the TMS using the SEP 2.0 messages. It gathers the required vehicle parameters over Unix sockets from a second software component.

The SEP 2.0 client in the vehicle implements the IEEE2030.5 function sets. The Client Function Sets are controlled by the respective Servers in the TMS module. The EDEV client, in addition, interacts with the EDEV server on the EVSE for IEEE2030.5 authorization (J3072) to connect and for authorization to discharge to the grid.

The “SEP to CAN” component of the Vehicle sub-system communicates to the charging controller the different states the charging controller needs to be in. It will also capture the vehicle parameters put out by the Charging controller on the CAN bus.

The Charging controller component of the Vehicle sub-system actually controls the charging/ discharging of the vehicle. It could be in one of the following states:

- TMS not found (within a 3-minute timeout), go to default charging state
- Charge at 25 percent rate when commanded by the TMS
- Charge at 100 percent rate when commanded by the TMS
- Discharge at the rate commanded by the TMS.

Software System Overview

The software is an end-to-end secure communications system using IEEE2030.5 between:

- TMS and the EVSE for Load control for PEV without communications
- TMS and the PEV using the EVSE as a bridge for DRLC and DER control
- EVSE and PEV to exchange Interconnection parameters to the Grid

The EVSE module has the server function sets that control clients in the PEV and the client function sets that are controlled by the respective servers in the TMS module.

The PEV module has the client function sets that are controlled by the respective servers in the TMS module. The EDEV, SDEV, DINFO and DER client provide the information for SAE J3072 including authorization to discharge to the grid.

Figures 9 through 12 present the IEEE2030.5 server/client function sets applied to the TMS, EVSE, and the PEV, and the relative server/client interactions between the device function sets for J3072 authentication, EVSE load management, and PEV load and generation management.

Figure 9: IEEE2030.5 Applied Software Function Sets

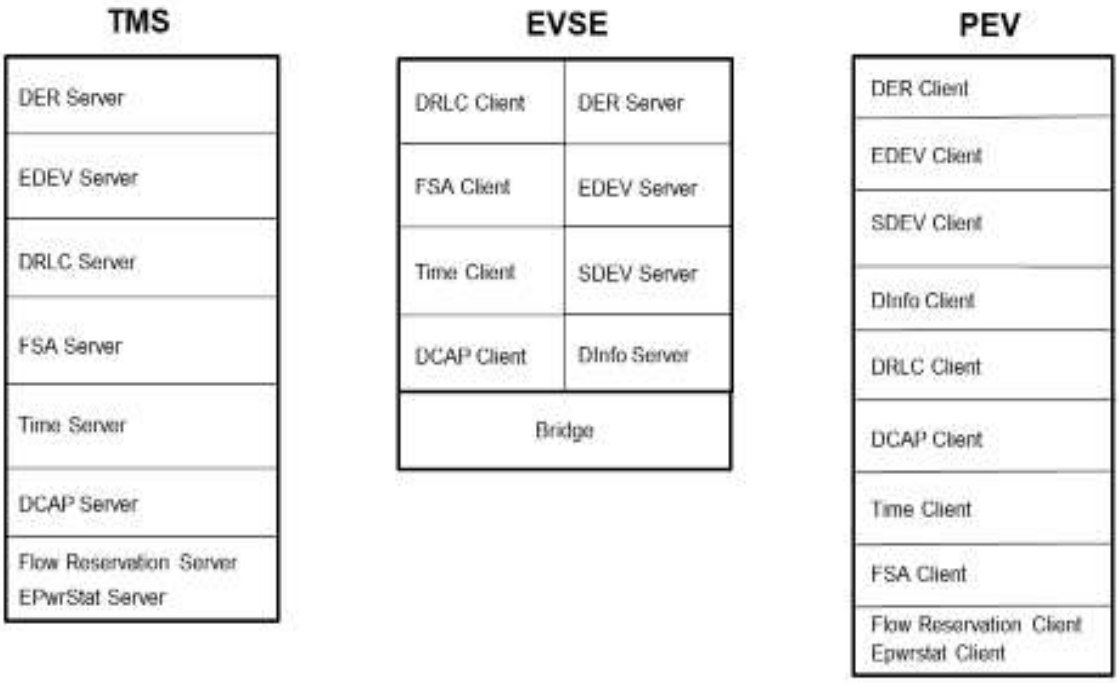

Source: Kitu Systems

Figure 10: Function Sets Utilized for SAE J3072 Control

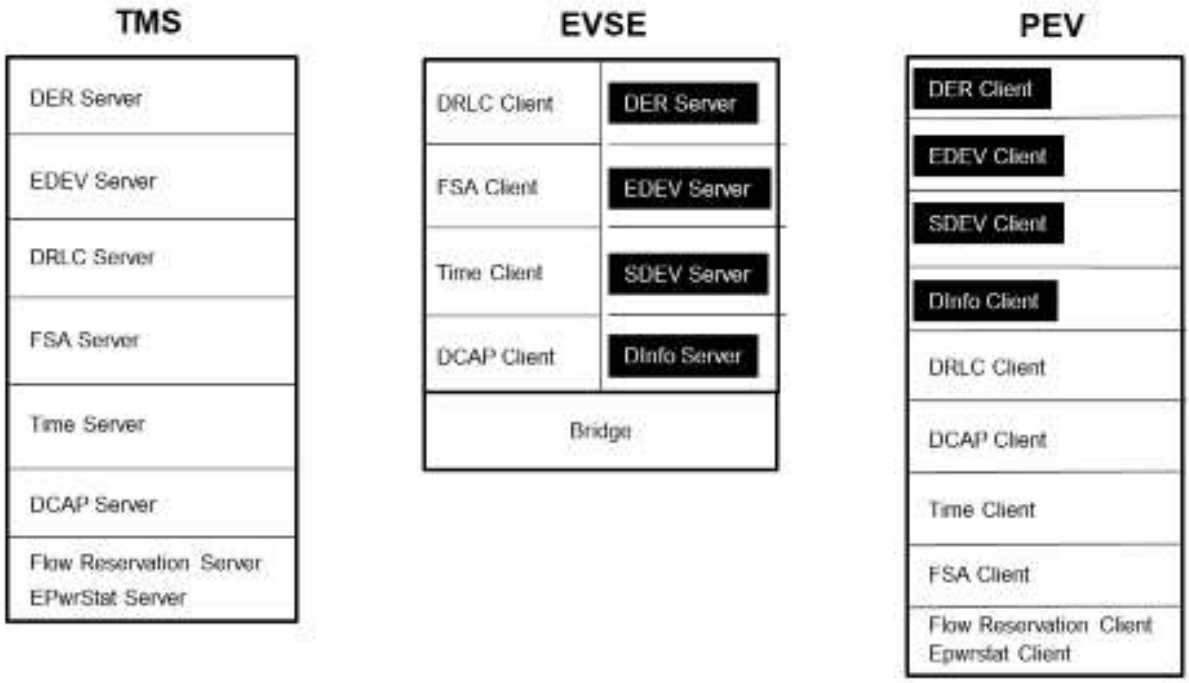

Source: Kitu Systems

Figure 11: Function Sets Used for Electric Vehicle Supply Equipment Load Management

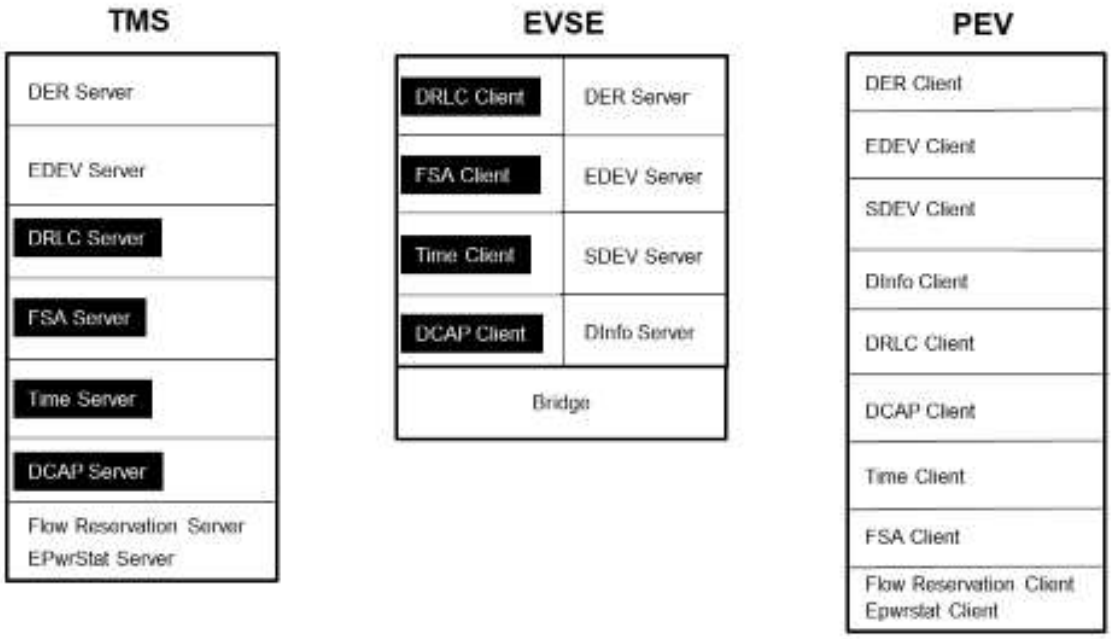

Source: Kitu Systems

Figure 12: Function Sets Utilized for Plug-in Electric Vehicle Load and Generation Management

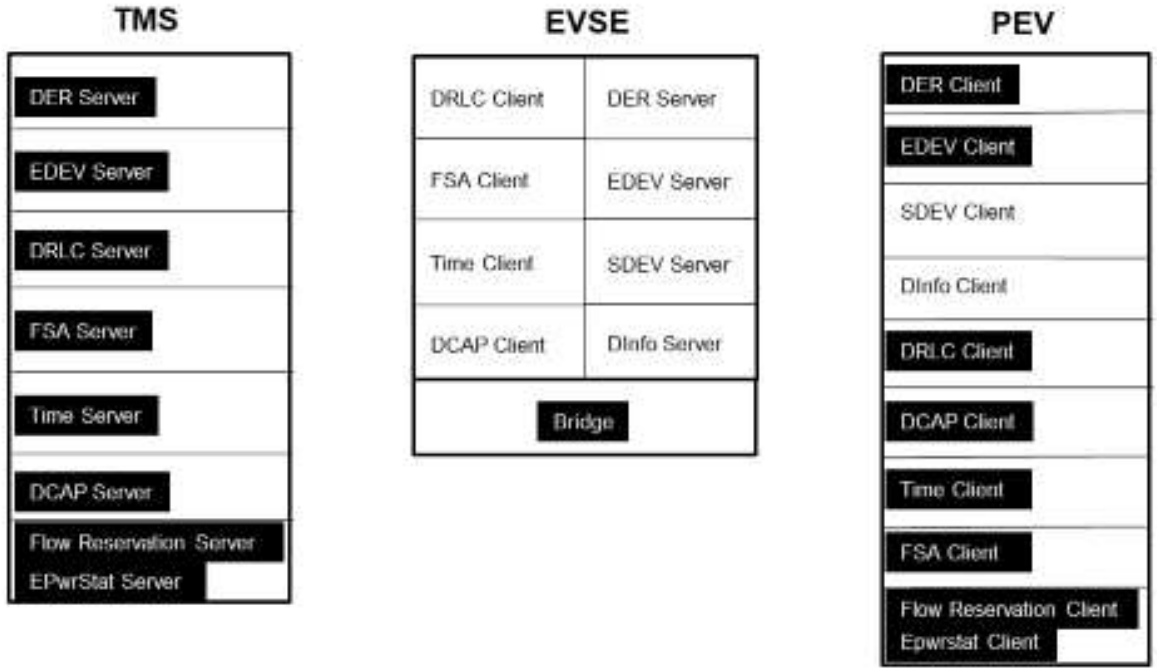

Source: Kitu Systems

System Deployment and Demonstration

The vehicle V2G communications systems by Honda and FCA were independently developed and tested. The Chrysler Pacifica Van PHEV by Fiat Chrysler Automobiles in Auburn Hills, MI. and the Honda Accord PHEV at the University of Delaware and the Honda Tech Center in Torrance, California. EPRI and FCA did a comprehensive end to end test with the Pacifica Van PHEV at the Chrysler campus in Auburn Hills prior to shipment to University of California San Diego (UCSD) for the field site demonstration. It was primarily to iron out any issues with the vehicle more expeditiously due to the close proximity of vehicle software engineers at the Chrysler campus. This entire setup was replicated at UCSD microgrid site for field integration and testing. This chapter describes the results of the end-to-end functional testing both in the lab and in the field.

Functional End-to-End System Integration

Purpose

The functional end-to-end system integration included the following sub tasks:

- Site preparation supporting a safe PEV charging subsystem that meets test site requirements for installed electrical equipment by working with industry partners, utility and where necessary other parties such as electrical inspectors in assessing installed charging stations for compliance.

- Designing and configuring PEV SEP2.0 commands to support J3072 to EVSE for interconnection and to communicate to the IOTECHA platform.
- Procuring and integrating a local transfer switch that enables safe and outage-immune ride through capability of the V2G system to connect mains versus V2G generated power locally in a 'break before you make' type connection with appropriate response time to prevent two sources to simultaneously power the local circuits.
- Configuring individual charging station controllers and ensure operational communications with the IOTECHA Platform.
- Configuring IOTECHA Platform and ensure operational communications with the EPRI TMS platform.
- Acquiring appropriate V2G related grid services communications for the relevant Utility services, for example, OpenADR to the EPRI TMS platform.

Use Cases

The control schemes and algorithm validation use cases fall into four areas: peak shaving, over-generation mitigation, ramping power support, and ancillary services.

- Peak shaving: In the peak shaving mode, the algorithm will attempt to lower the demand charged by the utility by monitoring the KW max during the nominal demand interval each hour and reduce the charging from 100 percent charge rate to a lower value based on the number of PEVs and the anticipated departure time. In this mode of operation, a ramp down in charge rate command to the vehicle may be initiated from the end of the previous hour through the end of the demand interval of the current hour. After that time the rate may be ramped up to the max vehicle charging rate. This would be continuous loop until the vehicle SOC user minimum requirements are met. Other influences on the controls algorithm are local grid support (voltage hold up override mode) from the local TMS, and wide-area grid support (brown-out mitigation) as an input from the utility to the TMS device.
- Over-generation mitigation: In the over-generation mitigation mode of operation, the algorithm will seek to maximize the local PV generation consumption by charging the vehicle at max charge rate and for duration to maximum vehicle charge until past peak sun-time generation. Local TMS will determine power flow either forward or reverse, use day-ahead solar forecasts of downloaded solar generation data files to minimize the over generation placed back on the grid. As PV systems become more sophisticated, the PV generation curtailment may be from the TMS directly communicating to the PV systems.
- Ramping power support: To support ramping power mode, the algorithm may set for discharging vehicles into the grid or charging vehicles from the grid. The charging or discharging mode will depend on the positive or negative ramp rate to support grid function. The time of day is very important in the algorithm as the rate of climb or fall of grid power usage will determine certain factors. A regulator or similar device may be used in concert.

- Ancillary services: ancillary support will mean a direct input command or solar forecast day-ahead file. In this mode, the TMS will follow direct input control from the utility. The TMS will attempt to deliver power to the grid from V2G operation or PV to grid control operations. V2G operation will be based on minimum vehicle SOC and maintain vehicle usability. PV will obviously depend on time of day and weather factors.

Scenario Definitions

Transformer capacity: The transformer capacity is rated in kVA. In the use case testing, the assumption is that one 75 kVA transformer serves eight residential homes. The transformer capacity may have only to do with transformer over-excitation in the load and generation models of the TMS algorithm.

Residential load: Typical home energy usage and only affects the charge or discharge part of the TMS algorithm and may serve to verify expected results.

Photovoltaic solar generation: In the use case scenarios, the summer PV generation will be used for the use cases as this is the maximum PV generation time and is the most likely to over-excite the transformer. Winter PV data will be used to check the operation of the algorithm

PEV: PEV data used in the use cases. TMS charge and discharge assumptions are two rates, 3.3KW and 6.6KW. Variables used by the TMS are Arrival and Departure time of day, Arrival SoC, Min Soc, Departure Soc, Battery Capacity, Charge/Discharge rates. For Grid control, if (Departure-Arrival) - Charge Rate*(Arrival Soc-Min SoC) – Charge Rate*(Departure SoC-Min Soc) is positive the PEV is available for grid Services.

Early departure: This is used as a check that the TMS algorithm accommodates any change to driver habits and that in all circumstances the driver has charge to drive to the destination.

Utility/ISO signals: If the priority is to protect the transformer, then the utility signals should be treated as a secondary effect only after the transformer is protected against thermal overload. These are an exception and the expectation is that utility commands can be run at the same time or after the grid services have been run to support the grid.

Control algorithm: Predict net load profile including period of negative surplus power back-flow.

Input Variables

A-priori knowledge of available PV power in the form of power profile (predicted power). Input variables:

- Transformer available capacity
- Premise load
- PEV arrival times, PEV battery capacity
- PEV departure time settings
- PEV arrival SOC

- Customer settings for required min/max SOC for PEVs
- Real-time feedback
- Transformer available charge power capacity based on temperature and premise load
- Actual vehicle charge power and plug-in status
- Control algorithm
- Predict net load profile including period of negative surplus power back-flow
- Prioritize charging of vehicles based on:
    - Departure times
    - Type of vehicle

System Commissioning

System commissioning supports a safe PEV charging subsystem that meets test site requirements for installed electrical equipment by working with industry partners, utility and where necessary other parties were involved.

A 75-kVA transformer was installed at the charging station site. The 75-kVA transformer capacity was chosen to simulate the service requirements for a typical eight house split phase 240 VAC energy distribution supply. All regulatory requirements and inspections were met prior to test site power up.

Installed four each AeroVironment, Inc. (AV) model EVSE-RS Level 2 PEV chargers with communications boards to enable bi-directional power flow from the PEV to the grid. The modified EVSE-RS have the following functionality:

- Communication from the EVSE motherboard to the communication board via the BOB protocol
- PLC communication via HomePlug GreenPhy to the vehicle
- WiFi communications from the EVSE to a cellular gateway
- Bi-directional power flow between the EVSE and the grid

The TMS system was installed per the written instructions provided by EPRI. All safety and building codes as applicable were followed for voltage levels of 240 VAC. All required PPE safety equipment as mandated for electrical construction were used and best practices for equipment installation followed. EPRI personnel were on site to monitor and advise during TMS deployment and installation.

Figures 13 through 16 show the overall charging island, upgraded transformer, EVSE, TMS, and panel breaker. UCSD electrical contractors and inspectors approved the installed charging stations, transformer, breaker panel, and TMS in compliance to governing electrical standards.

Figure 13: Transformer Management System Installation and Connectivity

Source: EPRI

Figure 14: UCSD Upgraded Demonstration Site

Source: EPRI

Figure 15: Open Breaker Panel Showing TMS CT Connections

Source: EPRI

Figure 16: Foreground 75 VA Transformer and Electric Vehicle Supply Equipment

Source: EPRI

Summary of EVSE/PEV Integration Set Up

The vehicles arrived on site on 05-09-18. EVSEs were fully functional. As soon as the TMS setup was completed the EVSE successfully joined but the vehicles were not joining the TMS. Work was completed to resolve the issues.

Summary of Issues, Resolutions, Research Required

Issues

- Communication startup using the NMK keys between EVSE and EVCC was not implemented.
- Very slow communication cycles increased the testing times and were inefficient. Spikes and noise on the local grid need were measured to see if they were outside the expected power quality parameters of the components design.
- The Chrysler Pacifica on board bidirectional charger (OBC) was very sensitive and did not include any retry strategy, resulting in faulting OBC and the vehicle going to sleep instead of charging/discharging.

Resolutions

- Faulting of OBC and vehicle going to sleep was resolved by a new wake up strategy from the TMS, if OBC faults and vehicle goes to sleep when it was supposed to charge or discharge, the TMS sends out a toggle to wake up the vehicle to resume.

Research Required

- Implement SLAC within the EVCC and EVSE and validate coexistence functionality.
- Faster communication cycles are needed, rather than 1-minute cycle, should be in the range of few seconds or faster. Further architectural design work is needed. System not optimized for processing speed for this project. Connectivity and interoperability between the devices and the standards protocols were the focus, which was achieved.

More interactive team support at the system level from all the counterparts was needed. Team development activities between the two different vehicle communications modules implementations should be more directly synergized for requirements and coexistence of multiple vehicles and EVSEs. Assumes a more interactive testing and evaluation process would avoid many of the site interoperability and connectivity issues. However, there were significant time urgency constraints that affected the ability to conduct more team interactive integration testing.

Plug-in Electric Vehicle Management Test

The PEV Management Test Plan included the following sub tasks:

- Measurement and Verification plan as implemented
- V2G systems information.
- Data warehousing of data sets.
- Website repository of revenue kWh register data.

- Required data communications to California ISO or DSO.
- Review system test plan from test protocol document.

Purpose

The PEV management test plan was used to deploy the TMS to implement the identified test use cases. As each test case is studied, it can fall into the various test conditions of winter day sunny or winter day overcast, summer day sunny or summer day overcast, utility DR grid support override or minimum grid loading with high mid-day PV generation and resulted shifted vehicle charging to counteract PV.

As the data are collected, scheduled analytics of the algorithm performance and grid loading will occur. All data was warehoused on a redundant server and sliding data windows may be utilized to enhance reporting of the data analytics. Reports, raw data, and any local weather data was stored on an offsite back-up server. Data sets are separately maintained as PV, Load, vehicle SOC, etc. as the algorithm may be changed as required and previous data may be re-run as a simulation and compared to the previous data.

Finally, since the data may be re-run under simulation after initial analysis, all data will be securely warehoused and securely stored. Data may be copied as read only and saved elsewhere to be revisited as required.

Plug-in Electric Vehicle Measurement and Verification Plan

PEV measurement and verification plan as implemented falls into the categories of testing and validation of system components from the various entities responsible for the TMS, EVSE, EVCC, and OBCM. Then a site commissioning and verification process produces site testing results to validate component features were functioning.

System Lab Testing Prior to Deployment (Electric Power Research Institute)

EPRI system lab testing prior to deployment was performed using the router only portion of the TMS running the algorithm engine as a sandboxed application. Data collection of real-time voltage, current, and harmonics was suspended and JSON data simulation files will allow the TMS algorithm to perform the simulation tests to verify the system operation based on known input simulation files.

Residential load was based on load profile files as no actual residential load was connected at the UCSD site. PV and PEV load data collected was captured from the UCSD site.

System Lab Testing Prior to Deployment (University of Delaware)

As a background, the University of Delaware designed the vehicle smart link (VSL) which is installed into the Honda Accord PHEV with the bidirectional on-board charger. The VSL is responsible for communication with the internal vehicle systems and was first installed in the vehicle in 2014. That earlier VSL communicated to the UDel EVSE using single-ended CAN.

For this project, University of Delaware was tasked with modifying the VSL hardware to communicate using HomePlug GreenPhy PLC. Decision was to use the STMicroelectronics

ST2100 using IoTecha MEVSE cover board as an add-on communication module to the VSL. An extended base motherboard was designed which would interconnect the original VSL to the PLC communication module. The IoTecha SDK was used to generate the firmware images for the MEVSE module.

There was a need to preserve the functionality and data logging capabilities of the vehicle with the existing NUVVE/UDel system. Implemented required Python code to handles two functions: one was to parse the status of the vehicle as reported to the NUVVE/UDel aggregator, and the other was to reroute the local charge/discharge commands back to the aggregator as a signal request. In this way, blending the two systems together for this experiment.

The next task was to implement the SEP2 or IEEE2030.5 communication protocol for SAE J3072 and SAE J2836/3 authentication and reverse power flow messaging. Used the KITU SDK to implement the SEP2 communication. The SDK provides the framework for sending and decoding SEP2 messages. The SDK release provided to UDel had some skeleton functions for this application. Main job was to map or transform the signals from the Python aggregator bridge interface to the SEP2 client application.

An AeroVironment EVSE was modified to have communication hardware based on the ST2100 with IoTecha and Kitu software. The EPRI TMS software running on a WiFi router with PLC connectivity to the EVSE and VSL module was used with the hardware pieces to perform development and testing at the University of Delaware lab, working with EPRI and Kitu to implement the messages and sequences required to complete the communication and the J3072 handshaking and authentication procedure.

In early April, at Honda Research and Development Americas in Torrance California with the entire setup (including the Honda Accord, modified VSL, AV EVSE, and TMS), the team was able to demonstrate solar peak charging and transformer overload discharging.

The most severe issue affecting reliability at the site with multiple connected vehicles and charging stations was that neither EPRI, Kitu, AV, FCA or UDel coordinated on the development of the signal level attenuation characterization (SLAC) protocol contained in the J2931/4 standard for direct PEV to EVSE association. This association issue for communication reliability was resolved, only for the site demonstration, using specific key addresses between each PEV and the EVSE.

Issues, Resolutions, and Further Research

Issues

- Communication startup using the NMK keys between EVSE and EVCC was not implemented.
- Very slow communication cycles increased the testing times and was inefficient .
- Spikes and noise on the local grid need measured to see if they are outside the expected power quality parameters the components are designed to.

- The OBC was very sensitive and did not include any retry strategy that resulted in faulting OBC and vehicle going to sleep instead of charging/discharging.

Resolutions

- Faulting of OBC and vehicle going to sleep was resolved by a new wake up strategy from the TMS, if OBC faults and vehicle goes to sleep when it was supposed to charge or discharge, the TMS sends out a toggle to wake up the vehicle to resume.

Further Work Needed

- Implement SLAC between the EVCC and EVSE prior to the communications starting.
- Faster Communication cycles are needed, rather than 1-minute cycle, it should be in the range of few seconds or faster.
- More support at the system level from all the counterparts was needed.

Vehicle Test Data

Vehicle Wake Up and Charging

Initially vehicle is sleeping, plug-in wakes up the vehicle, EVCC takes about 40 seconds to wake up and start communicating. After another 50-60 seconds TMS is found and next message is to Start Charging.

Figure 17: Vehicle Wake Up and Charging Time Sequence

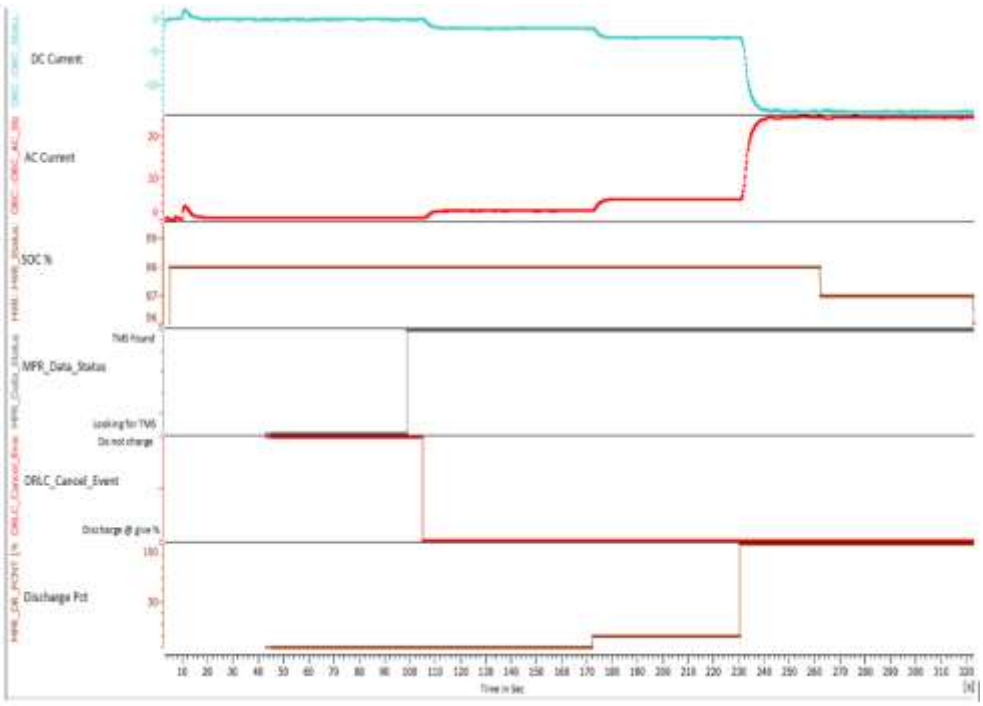

Source: EPRI

Vehicle Wake Up and Discharging

Vehicle is sleeping with 100 percent SOC, when DER window comes in, TMS sends a toggle to the EVSE to start discharging. Vehicle wakes up on toggle, TMS is found in 1.5-2 minutes, then vehicle receives discharge command with the discharge percent, initially it's '0 percent' and then "10 percent" and eventually "100 percent".

Figure 18: Vehicle Wake Up and Discharging Time Sequences

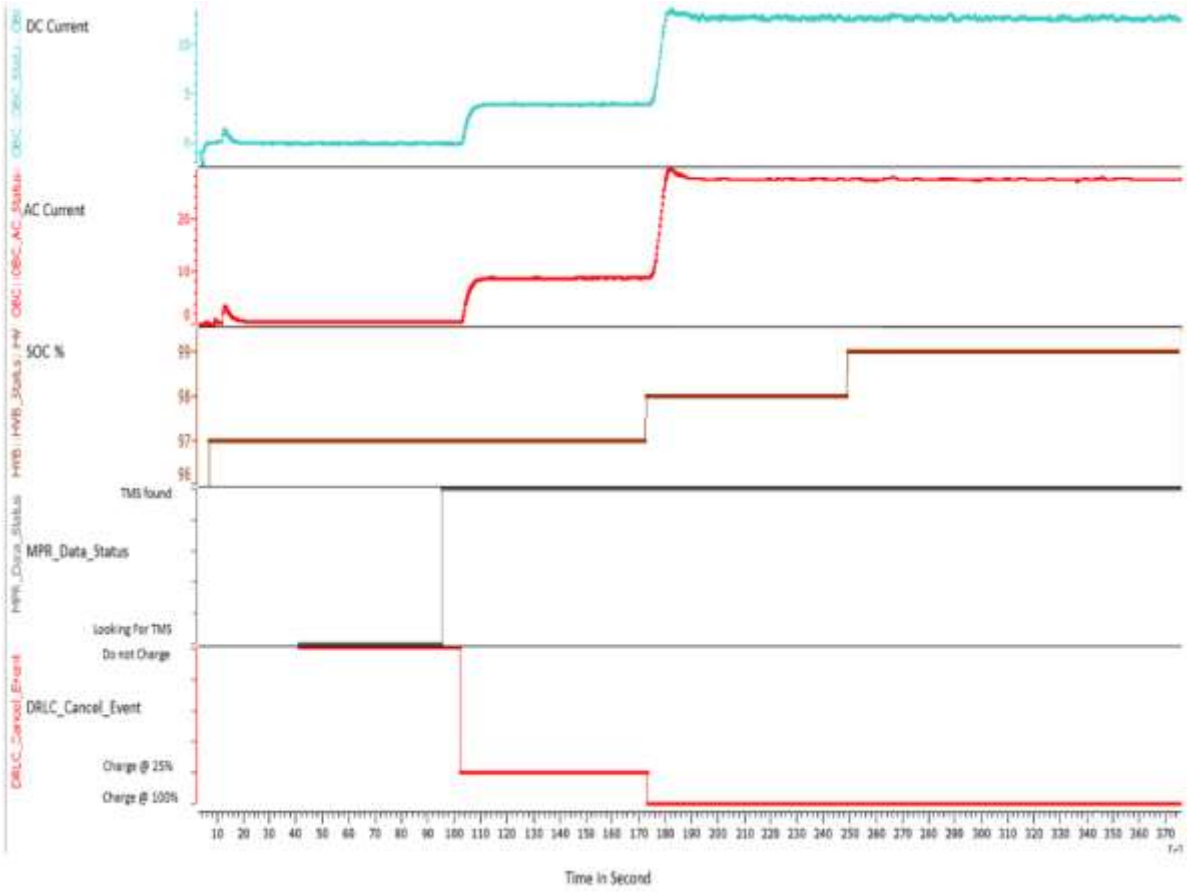

Source: EPRI

Vehicle Charging and Transitioning to Discharging

In this scenario, the vehicle is already awake and charging at 25 percent power and a DER event comes in, the vehicle is first commanded to go to discharging mode with 0 percent rate and the eventually to 100 percent discharge rate.

Figure 19: Vehicle Charging/Discharging Transition Time Sequence

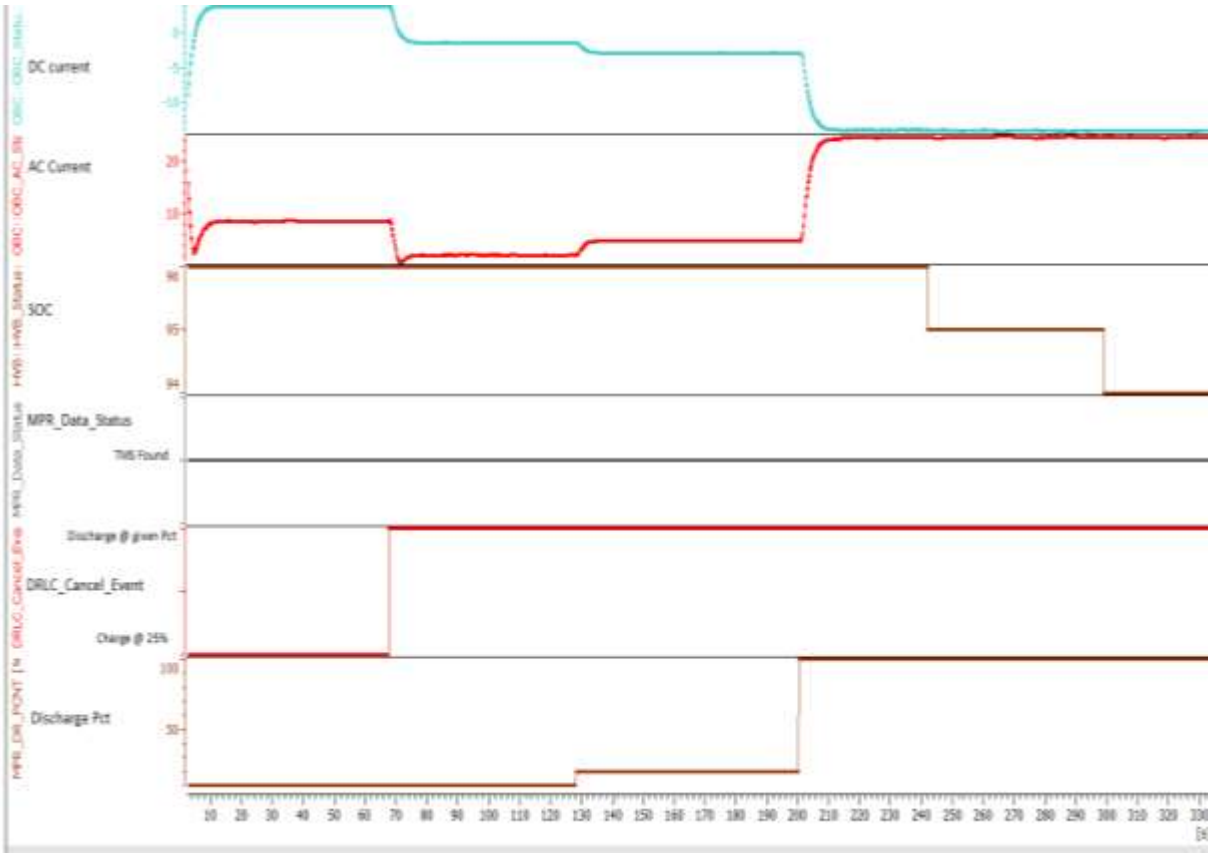

Source: EPRI

Vehicle-to-Grid Systems Information

The V2G Systems information output from the TMS provides a detailed log of vehicles, the status of the vehicles, the vehicle SOC, communications to EVSE, vehicles, and EVCC. This detailed log data (Figure 20) allows verification of the behavior of the entire end-to-end TMS control system app.

The PEV management test plan included the reporting software within the TMS to specifically log the transactional commands as shown in the figure below. In the upper section of the log file PEV and metering data show vehicles joining the TMS grid control functions. In the lower section, the TMS has set the control function to “grid support” and set the stepped discharge rates to the vehicles to the various rates. The TMS will step up the discharge rates from 20 percent, 40 percent, 60 percent, 80 percent, 100 percent and then step them back down in reverse order. Timing of the step period, rates, vehicle timing, and discharge duration are independently determined in the TMS and are determined by vehicle manufacturer, vehicle battery capacity, vehicle present SOC, grid support operation mode (“duck curve” mitigation), and the like. These logs may be read remotely from the website.

Figure 20: Sample Data Log File of Transactional Commands

```
[2018-06-10 18:54:31]Normal Charging: GridV 248.588562, num vehicles 0
[2018-06-10 18:55:31]Normal Charging: GridV 248.527374, num vehicles 1
[2018-06-10 18:55:31]Vehicle 362299535853 (soc 14.00) set to charge at 1 percent
[2018-06-10 18:56:31]Normal Charging: GridV 248.496872, num vehicles 2
[2018-06-10 18:56:31]Vehicle 362299535853 (soc 14.00) set to charge at 1 percent
[2018-06-10 18:56:31]Vehicle 583065765735 (soc 31.00) set to charge at 1 percent
[2018-06-10 19:29:31]Normal Charging: GridV 247.144806, num vehicles 3
[2018-06-10 19:29:31]Vehicle 584407202602 (soc 0.00) set to charge at 1 percent
[2018-06-10 19:29:31]Vehicle 362299535853 (soc 30.00) set to charge at 100 percent
[2018-06-10 19:29:31]Vehicle 583065765735 (soc 31.00) set to charge at 100 percent
[2018-06-11 02:54:31]DCS: Vehicle 584407202602 (SOC: 100.00, kW: 12.00) set discharge
at 40
[2018-06-11 02:54:31]DCS: Vehicle 362299535853 (SOC: 96.00, kW: 12.00) set discharge
at 40
[2018-06-11 02:54:31]DCS: Vehicle 583065765735 (SOC: 100.00, kW: 12.00) set discharge
at 0
[2018-06-11 03:01:31]DCS: Vehicle 584407202602 (SOC: 99.00, kW: 12.00) set discharge
at 80
[2018-06-11 03:01:31]DCS: Vehicle 362299535853 (SOC: 91.00, kW: 12.00) set discharge
at 80
[2018-06-11 03:01:31]DCS: Vehicle 583065765735 (SOC: 100.00, kW: 12.00) set discharge
at 0
```

Source: EPRI

Website Repository of Revenue kWh Register Data

The revenue grade Class 0.5 percent meter in the TMS records the kWh register data. Presently, data comparison for the site kWh consumption is not available since the utility metering of that research portion of the site is not separately metered by the utility. The kWh consumption is recorded in the TMS and available as required.

Required Data Communications to California ISO or DSO

Within the TMS, the ISO/DOS override control feature permits an authorized entity with proper security credentials to remotely write a grid override command to the TMS. In response to the

override, the TMS will discharge all participating vehicles into the grid until the vehicles discharges to a programmed minimum vehicle SOC. The vehicle minimum vehicle SOC is determined for each vehicle and is based on the required vehicle SOC to return the vehicle to work or home as needed. This varies by the distance traveled to home or work as related to arrival SOC recorded in the TMS.

Review and Prepare Warehoused Data Sets and Ensure Warehoused Data is Complete, Archived and Locked

The website is a repository for all data, control files, meter kWh data, and simulation files. The data may only be reviewed in a read-only mode and data access is authenticated for specific users. The website is housed in a container website like Amazon Web Services where it is automatically backed up and has multiple servers located in various geographic locations to provide secure redundancy of the data stored.

Review System Test Plan from Test Protocol Document

The system test plan was followed for a summer sunny day scenario for the installed time of year. PV, outside temperature, grid voltage, and vehicle loads observed for the test were as expected. The summer sunny day, summer cloudy day, and the grid control scenarios were tested. The TMS used actual PV data as aggregated at the transformer to charge the vehicles. Peak shaving was initiated during the 6 PM to 9 PM hours. Due to the time of year, only those summer day scenarios could run. It is expected that there is little difference in the winter scenarios as far as the TMS control algorithm is concerned.

Analysis of Data

The data files were scanned to detect out of range data, invalid data, and malformed data records. A report is generated of the error and reported as a method to evaluate the overall performance at a system level. Data files were analyzed for expected results based on the design of the TMS algorithm. Any unexpected results will be further analyzed to determine proper operation of the TMS system and data collection on an ongoing basis.

Review and If Necessary Revise Algorithm

As required after the data are reviewed, any refinement or changes to the algorithm were implemented. All initial data collected may be re-analyzed if required as an iterative adjustment to the algorithm.

The TMS algorithm has shown that the expected simulation results as verified in the TMS vehicle command logs and the data plots generated from the TMS as compared to the actual data collected and plotted at the site show that the TMS algorithm performs grid control functions as expected. Algorithm control is sufficient; however, loss of communications from the TMS to the vehicles remains problematic and further research to determine the communications breakdown is needed.

Measures of Success

The measure of success was if the TMS unit can successfully manage up to 8 vehicle loads and provide real-time grid load modification. Based on PV generation, vehicle load, residential load, grid support functions and transformer protection schemes; the TMS provided control consistent with reducing load during the evening hours (flattening the head of the duck curve) and increasing load during peak PV generation (flattening the belly of the duck curve) while looking at predictive files on the website or real-time data for potential grid support functions.

Summary

All data was reviewed as needed. Beyond the remaining vehicle to EVSE communications issues, better overall information sharing between all participating entities will reduce delays and allow any final issues to be resolved in a timelier fashion. The expectation that the initial TMS algorithm will prioritize vehicle charging and minimize transformer over-excitation was met and vehicle control and data collection was sufficient and accurate to indicate that vehicle to grid controls are viable. An observation is that vehicle charging or discharging to the grid will be minimal during the normal drive home times of 5 pm 7 pm when vehicles are on the road. New strategies such as ancillary battery storage may be required to mitigate the grid during those times. Some remaining research suggestions are:

- TMS control and data collection with a full complement of 8 vehicles
- Deployment to a residential load area
- Aggregation of workplace and residential loading, charging, and grid control data
- Utilize the full TMS function capability of “look ahead” solar forecast data files and integrate with current day actuals in real-time
- Add TMS control of other distributed energy resources such as battery storage
- Evaluate requirements to perform additional grid frequency stability
- Monitor grid voltage sags, THD, and PF as additional grid control points in the TMS

Data Collection and Technology Performance Analysis

Once the functional end-to-end testing was complete, each use case scenario that the system was designed to implement was first planned out for testing and then implemented to test so appropriate data collection can occur for analysis. This chapter describes both the plan as well as execution and results of the testing performed in the field.

Scenario Test Plan

The Scenario test plan included the following sub tasks:

- Scenario use cases.
- Schedule and analyze a series of 3-month data collections for each algorithm and warehouse each data set.
- Review and if necessary, revisions to the algorithm for each phase.

- Review with participants and collect and document all responses.
- Review and prepare *Warehoused Data Sets* and ensure warehoused data is complete and locked.

Purpose

The Scenario Test plan details the methods used to deploy the TMS and educate the vehicle drivers on the identified test use cases. As each test case is studied, it can fall into the various test conditions of winter day sunny or winter day overcast, summer day sunny or summer day overcast, Utility DR grid support override or Minimum grid loading with high mid-day PV generation and resulted shifted vehicle charging to counteract PV.

As the data are collected, scheduled analytics of the algorithm performance and grid loading will occur on a 3-month basis. All data will be warehoused on a server and sliding 3-month windows may be utilized to enhance reporting of the data analytics. Reports, raw data, and any local weather data will be stored on an offsite back-up server. Data sets will be separately maintained as PV, Load, vehicle SOC, etc. as the algorithm may be changed as required and previous data may be re-run as a simulation and compared to the previous 3-month data.

Finally, since the data may be re-run under simulation after initial analysis, all data will be securely warehoused and securely stored. Data may be copied as read only and saved elsewhere to be re-visited as required.

Scenario Use Cases

Based on typical grid loading, PV, and day of the year; four use cases were found to be statistically important. The cases were reduced to a winter sunny day, a winter cloudy day, a summer sunny day, and a summer cloudy day based PV, temperature, degree days, and typical grid loading averages.

Photovoltaic Solar Generation Use Cases

Figure 21 shows the typical solar curves used in the TMS algorithm use case testing. The basis for these four PV generation curves is actual residential data from a home with 5kW PV roof top installation located in Santa Clara, California.

Figure 21: Solar Curves for Summer and Winter, Sunny and Cloudy Days

Illustration 1: Winter Sunny Day

Illustration 2: Winter Cloudy Day

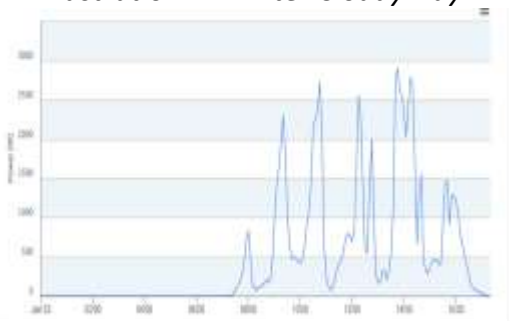

Illustration3: Summer Sunny Day

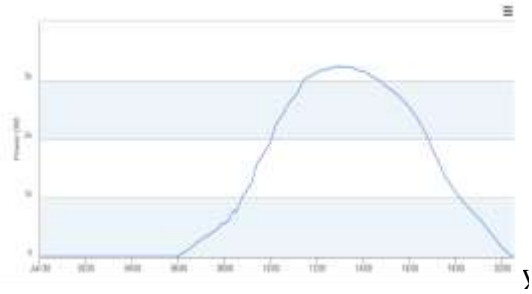

Illustration 4: Summer Cloudy Day

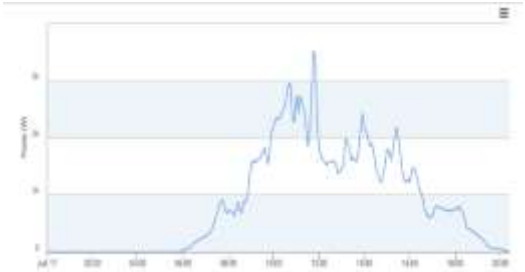

Source: Kitu Systems

Initial Simulation Results

In this simulation run, the TMS sets the vehicles to charge to increase the load on the grid during peak PV generation. Figures 22-25 show the load leveling function of the TMS to raise the grid load and reduce excess PV generation to the grid. Top plot is the PV Generation curve. Second Plot is typical house consumption curve. The Middle curve is the plot of the results from the TMS simulation to reduce the excess PV (red line) by charging the vehicles shown in bottom two plots. Excess PV was reduced from -21 kW to –10 kW. Three vehicles participated in this simulation run.

Initial graphical simulation results are shown for up to three vehicles running combined use case, grid support and transformer protection control.

Figure 22: Summer Day with Grid Support - Three Vehicle Schedule

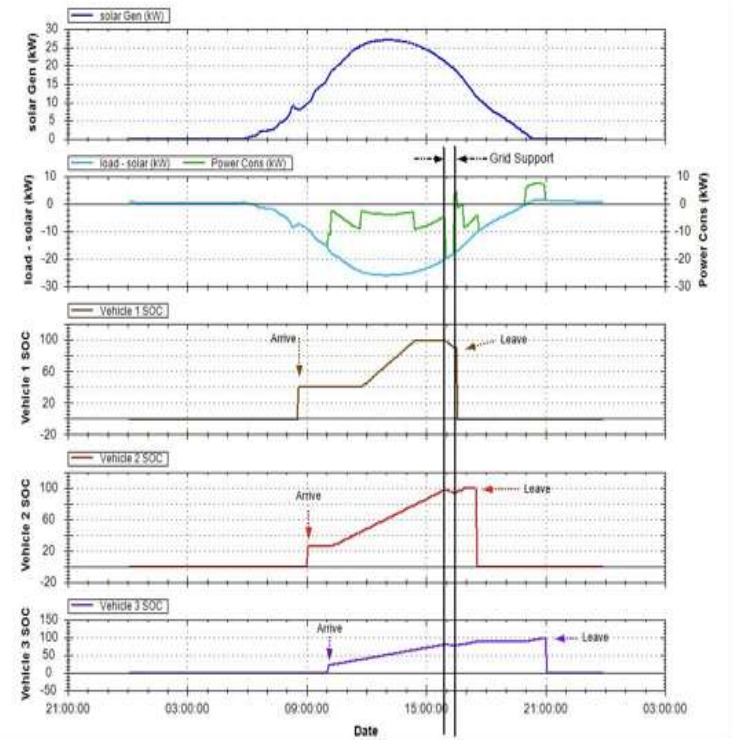

Conditions:
- Varying Arrival Times
- Varying Arrival SOC values
- Varying Departure Times
- Smooth PV Supply
- Variable Departure Times
- Delayed charging to coincide with surplus PV generation
- Including 'Grid Services' time (assumed to require power flow back to the grid)

Suggested Additions
- Net load on the transformer that shows the local 'duck curve'
- Power profiles – by vehicle and total at the transformer
- Local premise load profile

Source: EPRI

Figure 23: Winter Day with No Grid Support - Three Vehicle Schedule

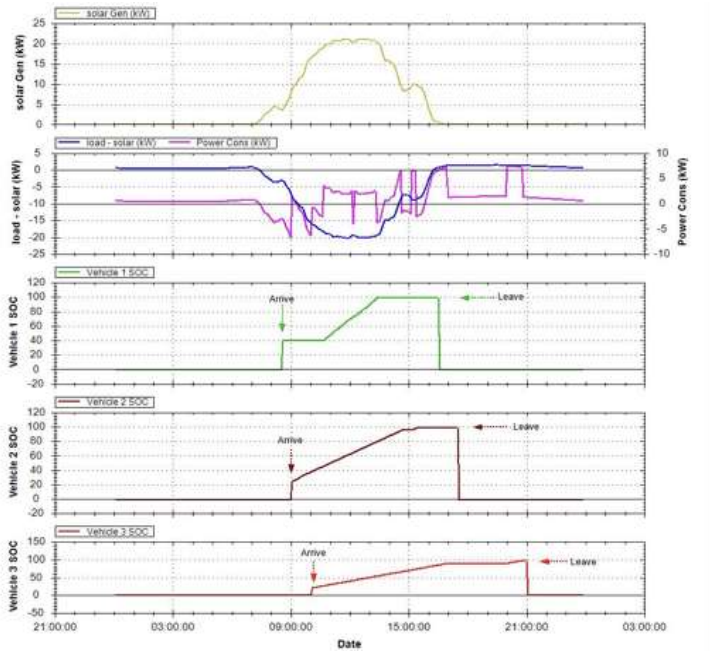

Conditions:
- Varying Arrival Times
- Smooth PV Supply
- Variable Departure Times
- Scheduled Charging
- Including 'Grid Services' time

Suggested Additions
- Power profiles – by vehicle and total at the transformer
- Local premise load profile

Source: EPRI

Figure 24: Duck Curve Modification Case A - Three Vehicle Schedule

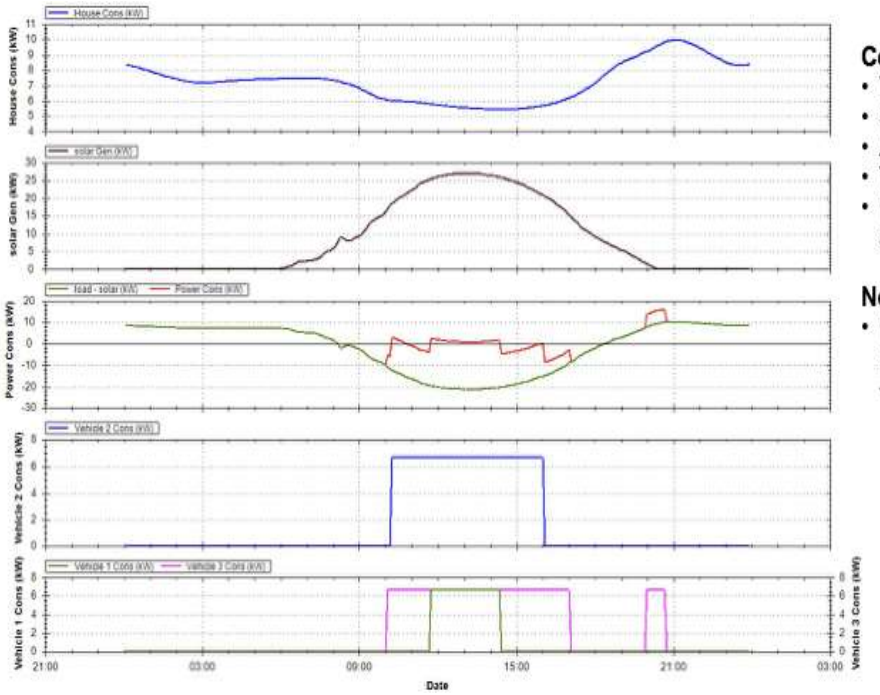

Conditions:
- Varying Arrival Times
- Smooth PV Supply
- Available House Load
- Variable Departure Times
- Charging scheduled with TMS algorithm

Notes:
- Consume PV for charging, reducing belly of Duck curve from -21 kW to -10 kW

Source: EPRI

Figure 25: Duck Curve Modification Case B - Three Vehicle Schedule

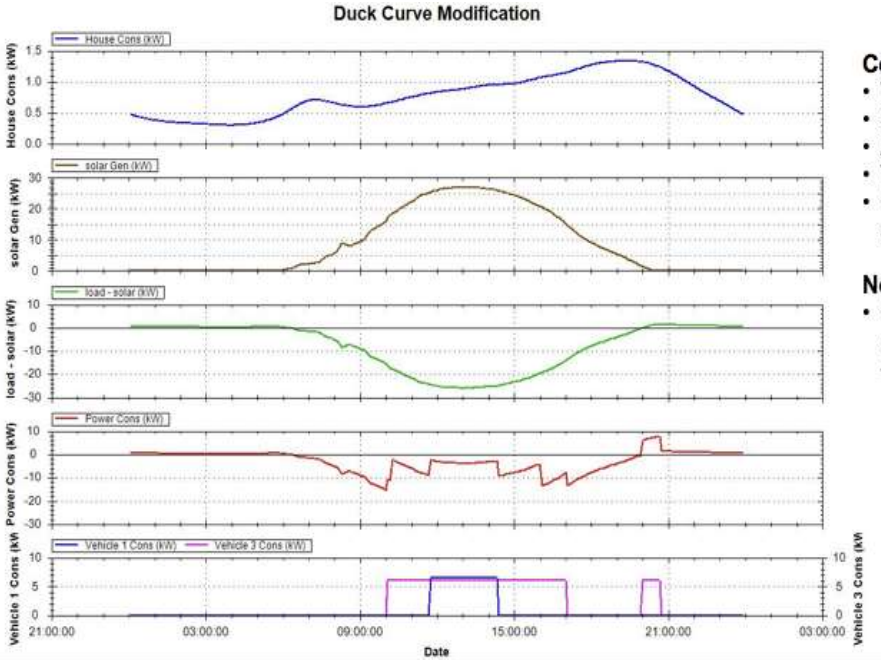

Conditions:
- Varying Arrival Times
- Smooth PV Supply
- Available House Load
- Variable Departure Times
- Charging scheduled with TMS algorithm

Notes:
- Consume PV for charging, reducing belly of Duck curve from -26 kW to -15 kW

Source: EPRI

In the transformer protection simulation, the transformer capacity was set at 15 kVA to show the temperature rise and protection simulation. The transformer over-excitation and higher operating temperatures may impact the transformer life. Transformer temperature and capacity are limits set at 15 kW in this simulation as shown in Figure 26.

Figure 26: Transformer Protection Operating Profiles - Three Vehicle Schedule

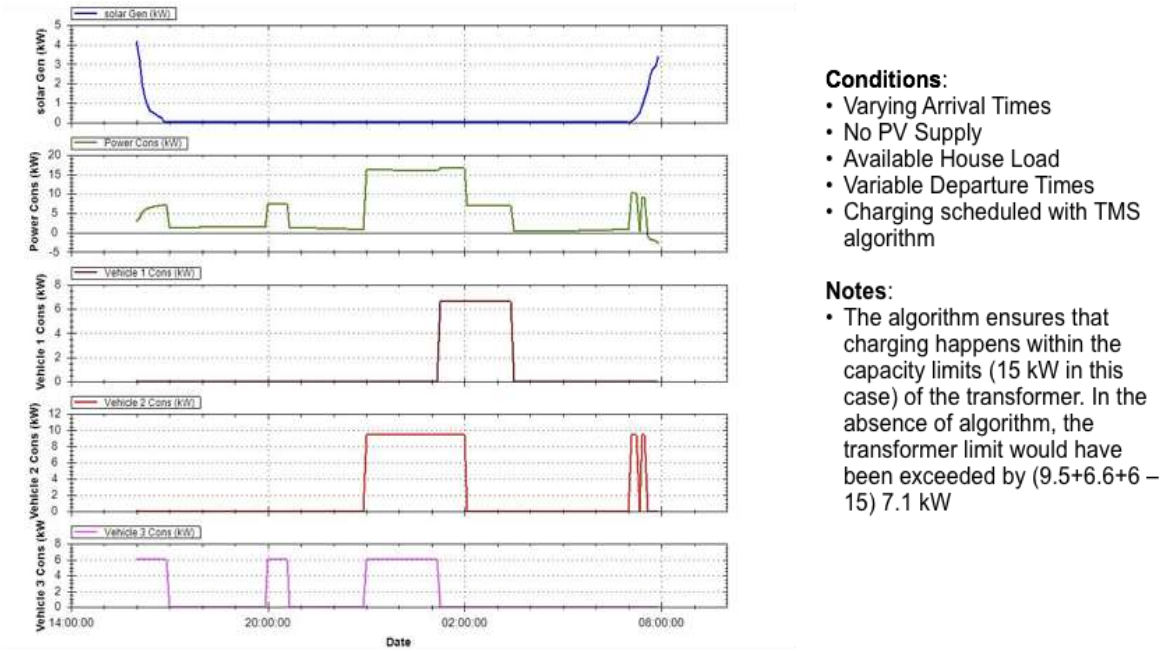

Source: EPRI

System lab testing was performed using the router only portion of the TMS running the algorithm engine as a sandboxed app. Data collection of real-time voltage, current, and harmonics has been suspended and JSON data simulation files will allow the TMS algorithm to perform the simulation tests to verify the system operation.

Scenario Test Implementation

The scenario test included the following sub tasks:

- Scenario definitions and use cases.
- Analyze a series of simulated data collections using the TMS for algorithm performance evaluation.
- Schedule and analyze a series of data collections for each algorithm and warehouse each data set.
- Review and if necessary, revise the algorithm for each phase.
- Review and prepare warehoused data sets and ensure warehoused data is complete and locked.
- Summary of the data output from the demonstration.
- Overall summary of assumptions, conclusions, open issues.

- Departure times.
- Type of vehicle.
- During charging, use times of solar availability first (11am to 2 pm), followed by late night charging (11 pm to 6 am), followed by daytime charging (night charging is cheaper than day time charging).
- For vehicles at or above min required SOC, delay charging until time at which negative surplus power flow is seen (observed).
- Initiate vehicle charging from surplus power flow. Terminate vehicle charging when SOC>max allowed setting.
- During charging, apply transformer available power constraint to the sum total of charge power, distribute the power reduction (if needed) based on vehicle SOC (highest SOC first) and vehicle type (PEV vs PHEV).
- During periods of grid needs (Ancillary services, ramp-up), identify vehicles that have energy at max allowed SOC, and use that energy during grid services period.
- During an unscheduled unplugging of the vehicle, its charge schedule will be interrupted resulting in relatively incompletely charged vehicle that still has enough energy.

Transformer Monitoring System Overview

The TMS design also contained a feature that allows the various scenarios to be run in a true simulation mode from files posted to the internet website or a real-time operations mode from data collected from the data recording meter within the TMS permitting capabilities beyond the features required for this research. The same hardware and algorithms may output data plots and issue control commands based on the connected devices.

Site Validation

- Installation was completed with the required internet connection, all 240 VAC wiring completed, and all site compliance inspections completed allowing the TMS to be powered on.
- Once powered-on, the data from the TMS meter system was confirmed to show, Nominal voltages, currents, THD, and positive power flow.
- After power confirmation and communications confirmation to the TMS from the internet access point, routine data collection was begun.
- No Load, PV data collection began after the initial data validation and website verification. Negative power flows from connected PV inverters expected under these conditions was observed.
- All vehicles on site were plugged into the charging stations; the simulation scenarios were followed to validate the system, simulations, and communications to the vehicles. The above simulation scenarios were followed as a check on the TMS system and the TMS vehicle controls algorithm.

- Of note, the loads on the TMS will always represent real residential loads, but site configurations only permit simulated residential loads on the system. All other PV and vehicle loads are actual connected load or distributed PV generation.
- All changes to the scenario use, load profile, and PV generation may also be made over the IP address of the TMS.
- Logging of the data, SOC of the vehicles, and load shape curves generated from the TMS validate the vehicle use cases, day-of-year, and ISO/DSO control of the TMS system.

Measures of Success

To restate the project measure of success the TMS unit successfully managed up to 8 vehicle loads and provide real time grid load modification. Based on PV generation, vehicle load, simulated residential load, grid support functions and transformer protection schemes; the TMS provided control consistent with reducing load during the evening hours (flattening the head of the duck curve) and increasing load during peak PV generation (flattening the belly of the duck curve) all the while looking at predictive files or real-time data for potential grid support functions.

Simulation Summary

The initial TMS algorithm prioritized vehicle charging and minimized transformer over-excitation. Control was sufficient and accurate to demonstrate the TMS control of vehicles arriving at different times with differing arrival vehicle SOC. Vehicle charging or discharging to the grid was minimal during the normal drive home times of 5 pm 7 pm. New strategies such as battery storage devices may be required to mitigate the grid support functions during those times.

Summary of the Real-time Data

Summary of the data output from the demonstration include the vehicle arrival time SOC charts showing delayed arrival charging of vehicles, Simulated arrival SOC since the vehicles were stationary at the UCSD site, Vehicle charging to mitigate solar PV impact during peak solar generation time during the day (increasing the grid load to raise the belly of the duck), peak shaving by vehicle-to-grid discharging during peak load times of 7pm – 9pm (grid control during peak load to flatten the head of the duck), and load leveling by charging the vehicles after 11pm (also TOU electric utility rate advantages).

The Figure 27 shows the two basic operations of the TMS controlling the charging and discharging of the V2G vehicles. The left-hand region of interest shows the results of TMS as having issued a charging command to the vehicle to absorb some of the excess PV generation. This is operation occurs between 11 am and 2 pm. The right-hand region of interest shows the results of the TMS issuing a discharge command to the vehicle to reduce the load presented to the grid. This is typical of grid load during the peak load time between 6 pm to 9 pm.

Figure 27: Graphic of Excess PV Reduction and Peak Shaving

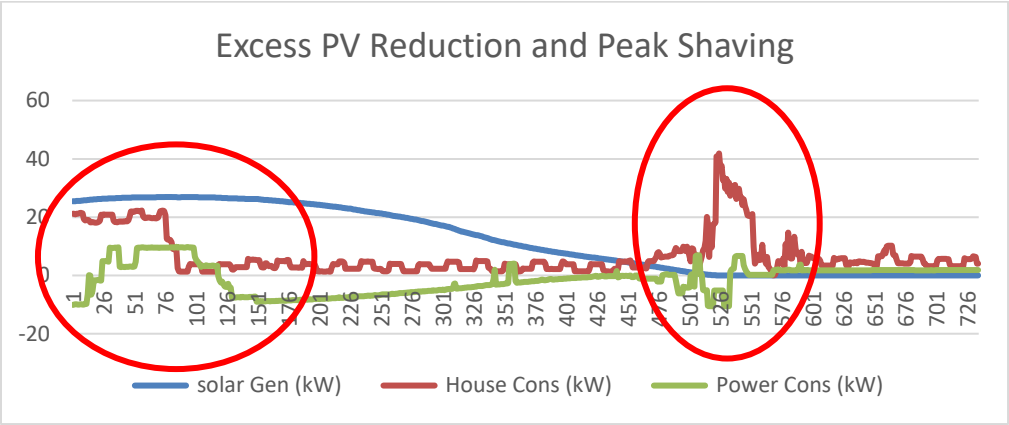

Source: EPRI

Figure 28 depicts the vehicle response to the TMS commands to absorb the excess PV by charging the vehicle during the peak solar production between 11am and 2 pm as shown on the left-hand region of interest. Once charged to the programmed minimum vehicle SOC the vehicle is ready for vehicle-to-grid operations.

Figure 28: Vehicle Charge/Discharge Cycle Across Peak Solar and Peak Load Periods

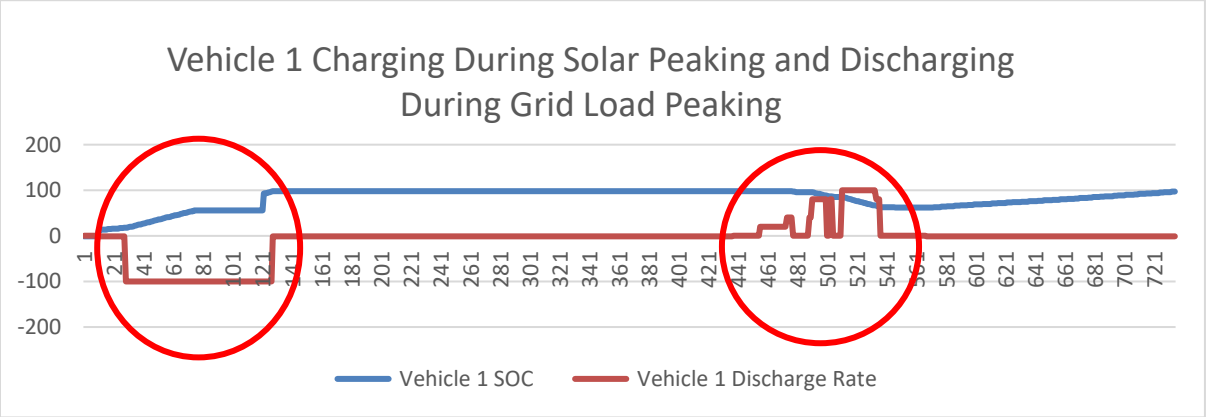

Source: EPRI

The -100 percent is the "discharge rate" from the TMS setting the vehicle charging at 100 percent. Of particular note is a temporary loss of communications with the vehicle during the charging session as seen in the SOC data set jump from 55 percent SOC to 90 percent SOC. This is an area of further research as to where the loss of reporting occurs.

The right-hand region of interest shows the vehicle response to the TMS discharging commands. The TMS algorithm "steps" the discharging rates and can step the rates up and down to approximate a discharge curve.

As shown in Figure 29 and stated previously, the TMS will set the discharge rates in steps to evaluate the real-time results of the power delivered to the grid. The note-worthy results during this particular event are that the Vehicle 2 discharge command was started before the Vehicle 3

command to discharge and was determined by the TMS from the vehicle SOC. The vehicles were discharged into the grid at different start times increasing the kWh delivery to the grid over a longer period of time.

Figure 29: Vehicle Charge/Discharge Peak Shaving Profiles

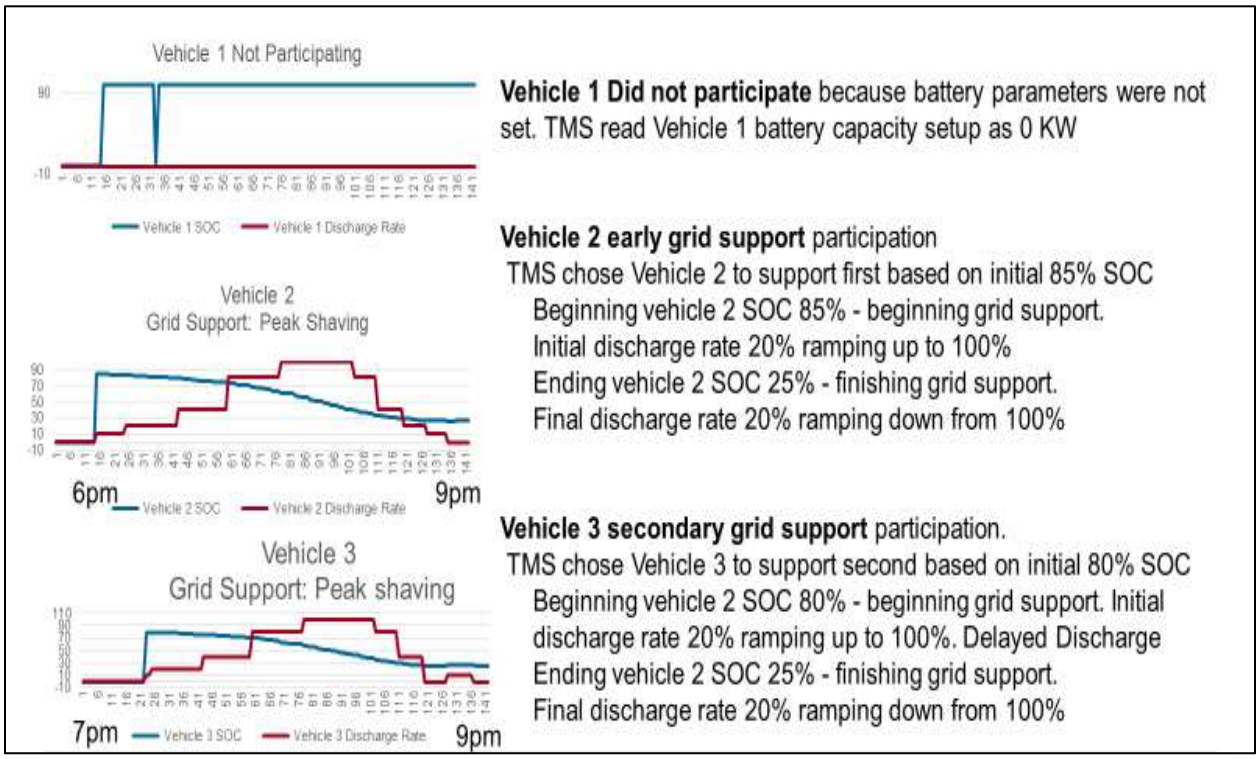

Source: EPRI

Overall Summary of Scenario Assumptions, Conclusions, and Open Issues

The scenario test results indicate that vehicle communications and methods to prevent loss of communications will need further refinement and there is a gap in the standards and methods at present. Given the connectivity, the number of vehicles commercially available for V2G, PV connectivity, and the like; the various hardware components have shown that the V2G support functions are viable for grid control functions. Of particular note; the overall timing of the control aspects of all hardware and software run at a 10-second loop time and a one-minute data collection time. If complete grid control including VAR and frequency control is required, a predicted control and loop time of no more than four seconds is required. These numbers are dictated by actual voltage and frequency standards on power delivery by the utility.

CHAPTER 4: Project Benefit Analysis

One of the key tasks in the project was to assess project benefits and to provide pathways for the value of these benefits to enter the planning/modeling discussions for long-term transmission, market (procurement), and distribution planning. This was performed in many different ways described in this chapter:

- The focus of this project was on distribution system integration of V2G. Distribution system integration is complex, and no two analyses are alike because no two segments of the distribution systems are exactly alike. So, the research team focused extensive analysis on developing a methodology that is broadly applicable and examples showing how to apply this methodology. The team used Open Distribution System Simulator (OpenDSS) in conjunction with EPRI "Hot Spotter" toolbox for distribution system 'hot spot' analysis.
- Second, the team extended traditional methods for cost/benefit analysis of grid services to accommodate V2G capable PEVs, using both the traditional framework[1] developed by E3 and the StorageVET[2] platform developed by EPRI that is widely used (and recommended by Energy Commission) for utility storage valuation.
- Third, to incorporate V2G capable PEVs into integrated resource planning[3] as well as distribution resource planning, the research team surveyed existing activity to identify approaches to incorporate V2G capable PEVs into modeling, scenario planning, and procurement planning processes. The results of this are very preliminary due to the early stage nature of V2G technology, uncertainties in its market adoption, and the rapidly evolving DER integration planning landscape. Given the large number of PEVs expected to connect to California's grid in a very short period, it will be important to integrate them in a manner that minimizes upward pressure on rates and on possible PEV owner incentives.
- Finally, it will be necessary for appropriate incentive mechanisms to be created for PEVs with V2G on board to be integrated in the distribution grid in a way that results in system-wide economic benefits. The section on tariff quantification methodology[4] and how V2G capable PEVs will participate in such tariffs explores this subject in further detail.

[1] See Appendix C: Value Assessment Modeling Assumptions and Distribution Model Framework Details.
[2] See Appendix D: Vehicle to Grid Extension of Energy StorageVET Operation Manual.
[3] See Appendix E Integrated Resource Planning Consideration for V2G Capable PEVs.
[4] See Appendix F V2G Incentives and Tariff Quantification Methodology.

This chapter describes the major areas of assessing, planning, and disbursing benefits appropriately to each stakeholder in a distribution grid that has large-scale V2G capable PEVs.

Grid and Ratepayer Benefits of Distribution Aware Vehicle-to-Grid Capable Plug-in Electric Vehicles

Energy and Environmental Economics (E3), as a sub-contractor to EPRI, analyzed the potential benefits of distribution aware V2G for the electric grid and California ratepayers. This section describes the approach used to quantify the potential benefits of V2G relative to smart charging (V1G) and unmanaged charging and summarizes the findings and policy recommendations. The benefits are calculated based on the demonstration of a fleet of vehicles at the UCSD campus.

E3 is developing a Solar + Storage dispatch optimization and valuation tool for the Energy Commission under EPIC project EPC-17-004. The Solar + Storage tool is developed to quantify the value of solar, storage and other distributed energy resources (DER), including local distribution system benefits with the Local Net Benefits Analysis (LNBA) approach developed for utilities to use in the CPUC Distribution Resource Plans Proceeding R.14-08-013[5]. The V2G benefit analysis is performed by representing a fleet of PEVs as a dispatchable resource in the Solar + Storage tool (Modelling Approach). The PEVs are modeled with three dispatch approaches, unmanaged charging, smart charging (V1G), and V2G under a variety of use case scenarios. The use case scenarios range from simpler cases where the PEVs provide only system and distribution capacity grid services to more involved cases that also engage in energy arbitrage and ancillary services. Both base and high values are modeled for each use case and the PEVs are modeled as being dispatched either to maximize utility grid benefits or customer bill reduction (Price Signals and Dispatch Behavior).

The benefit values are developed using the 2018 Avoided Cost Calculator developed by E3 for the CPUC, most recently updated in June 2018.[6] The technology to enable smart charging and V2G is nascent and rapidly developing and costs are not yet well established. Therefore, the results presented here are the potential benefits of V2G for the electric grid and California ratepayer. The net benefits are calculated as the net of the market revenues and grid benefits minus the costs of delivered energy to charge the PEVs for each use case. No costs for PEV, EVSE or V2G enabling technology are included. The results are summarized as the incremental net benefits of smart charging relative to unmanaged charging, and of V2G relative to smart charging (Net Benefits of V2G). The potential benefits are scaled up for the forecasted California PEV population in 2030 to estimate potential benefits for all California ratepayers (Benefits to California Ratepayers). Findings and policy recommendations are presented in the final section (Conclusions and Recommendations).

---

[5] More information on Local Net Benefits Analysis (LNBA) for distribution resources plans available at: https://drpwg.org/sample-page/drp/

[6] See 2018 Proposed Avoided Cost Calculator available at: http://www.cpuc.ca.gov/General.aspx?id=5267

Modelling Approach

Randomized Plug-in Electric Vehicle Driving Patterns

The Energy Commission Solar + Storage model used for the analysis takes one year of hourly or sub-hourly timeseries data as an input for driving behavior consisting of vehicle location and the energy discharged from the battery during driving. This one-year driving activity profile is then used for all years through the modelling period. When and where a PEV is available to connect to the grid strongly impacts the potential costs and benefits of V2G or smart charging technology. It is therefore crucial that driving patterns used to simulate V2G charging and discharging are representative of typical driving commuting behavior. Finding a complete year of historic data for a real driver that provides a good representation of the wider driving population is challenging. This is further complicated when modelling vehicle fleets where multiple of such datasets is needed and diversity in driving patterns is important. Furthermore, given the impact driving patterns have on the results, the ability to perform sensitivity analysis by systematically tweaking driving patterns input data is important. Therefore, a randomized PEV driving pattern algorithm was developed that uses probability distributions to generate the required timeseries input data.

The PEV driving pattern algorithm was used to generate location and driving power discharge data for all five PEVs at 15 min intervals for an entire year. The probability distributions used for random generation were garnered from The National Household Travel Survey (NHTS) (ref - 2017 NHTS https://nhts.ornl.gov/). The NHTS dataset was collected from 129,112 household surveys from all 50 states across the United States (pg. 4 dataset guide) and includes 923,572 trips. These trips were filtered down depending on the analysis, for example, to obtain probability distributions for the time of leaving home for work, only trips by car from home to work were analyzed. Figure 30 illustrates how the algorithm operates and its built-in probability distributions.

Using a randomized approach rather than real historic driving patterns requires some simplifying assumptions. Each day is modelled separately which means that drivers will always be at home by midnight of that day. Drivers only travel to work on weekdays and spend nine hours on average per day at work. Drivers that do not leave the house before 11am on a weekday stay at home all day, which based on NHTS data, has a 15 percent probability of occurring. Weekday trips involve only commutes to and from work, no other trips are modelled. On weekends, one to two long trips are simulated to a public location with no charging rather than lots of smaller individual trips. No public holidays or vacations are included. The power discharged from the battery to the engine when driving, or ‘driving discharge’ timeseries, is created by assigning an average power value to each 15-minute timestep when driving. This average power value is the same for every timestep and assumed not to vary based on driving distance, style, terrain etc. The summary of driving activity is shown in Table 1.

Figure 30: Visual Representation of the Random PEV Driving Pattern Algorithm

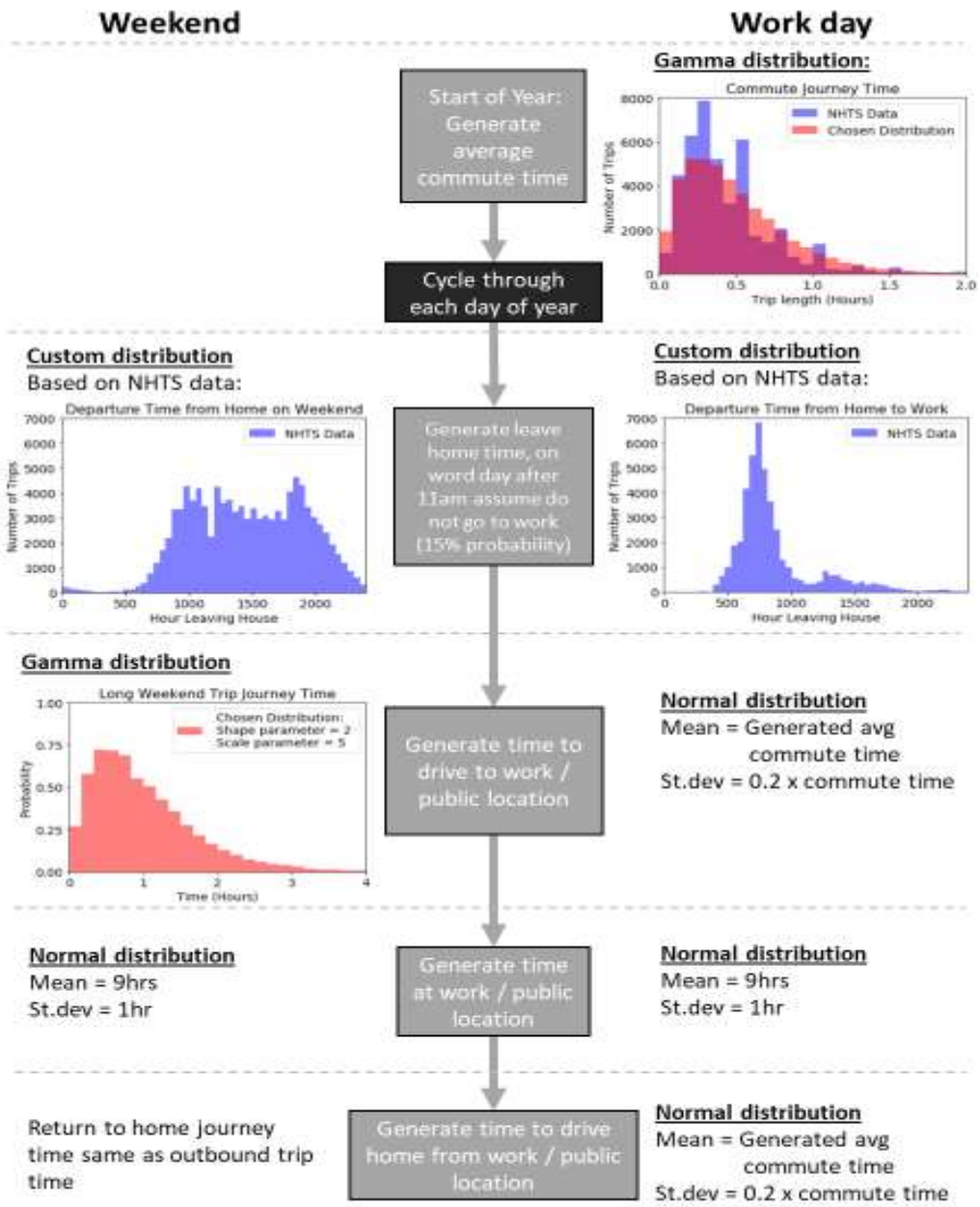

Source: E3

Table 1: Summary of Driving Activity Profiles for Each PEV

	PEV 1	PEV 2	PEV 3	PEV 4	PEV 5
Total Hours at Home	6,105	6,204	6,334	5,521	5,559
Total Hours at Work	1,981	1,951	1,849	1,954	2,022
Total Hours Driving	333	265	233	949	841
Total Energy Consumed by Driving (kWh)	3,324	2,644	2,325	9,461	8,383
Average commute time - one way (hrs)	0.39	0.27	0.17	1.58	1.34
Average time spent at work (hrs)	8.93	8.79	8.34	8.81	9.11

Source: EPRI

The main difference in behavior across each of the PEVs is the commute length which causes the broad variation in total energy consumption seen across the fleet. How this impact charging behavior and the relative benefits and costs of V2G will be discussed later in the report.

Avoided Cost Methodology

The benefits of V2G are calculated using the 2018 CPUC Avoided Costs. The avoided costs include the six components shown in Table 2.

Table 2: Components of Electricity Avoided Cost

Component	Description
Generation Energy	Estimate of hourly wholesale value of energy
Generation Capacity	The costs of building new generation capacity to meet system peak loads
Ancillary Services	The marginal costs of providing system operations and reserves for electricity grid reliability
T&D Capacity	The costs of expanding transmission and distribution capacity to meet peak loads
Monetized Carbon (cap and trade)	The cost of cap and trade allowance permits for carbon dioxide emissions associated with the marginal generating resource
GHG adder	The difference between the CPUC-adopted total value of CO2 and the cap and trade value of CO2.
Avoided RPS	This component has been set to zero.

Source: EPRI

Each of these avoided costs is determined for every hour of the year. The hourly granularity is obtained by shaping forecasts of the average value of each component with historical day-ahead and real-time energy prices and actual system loads; Table 3 summarizes the methodology applied to each component to develop this level of granularity.

Table 3: Summary of Methodology for Electricity Avoided Cost Component Forecasts

Component	Basis of Annual Forecast	Basis of Hourly Shape
Generation Energy	Forward market prices and the $/kWh fixed and variable operating costs of a CCGT.	Historical hourly day-ahead market price shapes from MRTU OASIS
Generation Capacity	Residual capacity value a new simple-cycle combustion turbine	RECAP model that generates outage probabilities by month/hour and allocates the probabilities within each month/hour based on 2017 weather.
Ancillary Services	Percentage of Generation Energy value	Directly linked with energy shape
T&D Capacity	Marginal transmission and distribution costs from utility ratemaking filings.	Hourly 2017 temperature data by climate zone.
Monetized Carbon (cap and trade)	CO2 cost forecast from revised 2017 IEPR mid-demand forecast, escalated at inflation beyond 2030.	Directly linked with energy shape with bounds on the maximum and minimum hourly value
GHG Adder	Difference between total value of CO2 and monetized carbon cost in the energy market prices.	Same as monetized carbon
Avoided RPS	Set to zero to be consistent with GHG adder.	NA

Source: EPRI

Figure 31 shows a three-day snapshot of the avoided costs, broken out by component, in Climate Zone 4. As shown, the cost of providing an additional unit of electricity is significantly higher in the summer afternoons than in the very early morning hours. This chart also shows the relative magnitude of different components in this region in the summer for these days. The highest peaks of total cost of over $20,000/MWh are driven primarily by the allocation of generation and T&D capacity to the peak hours (because of high demand in those hours), but also by higher energy market prices during the late afternoon, early evening.

Figure 31: Three-day Snapshot of Energy Values in Climate Zone 4 in 2018 (Pacific Standard Time)

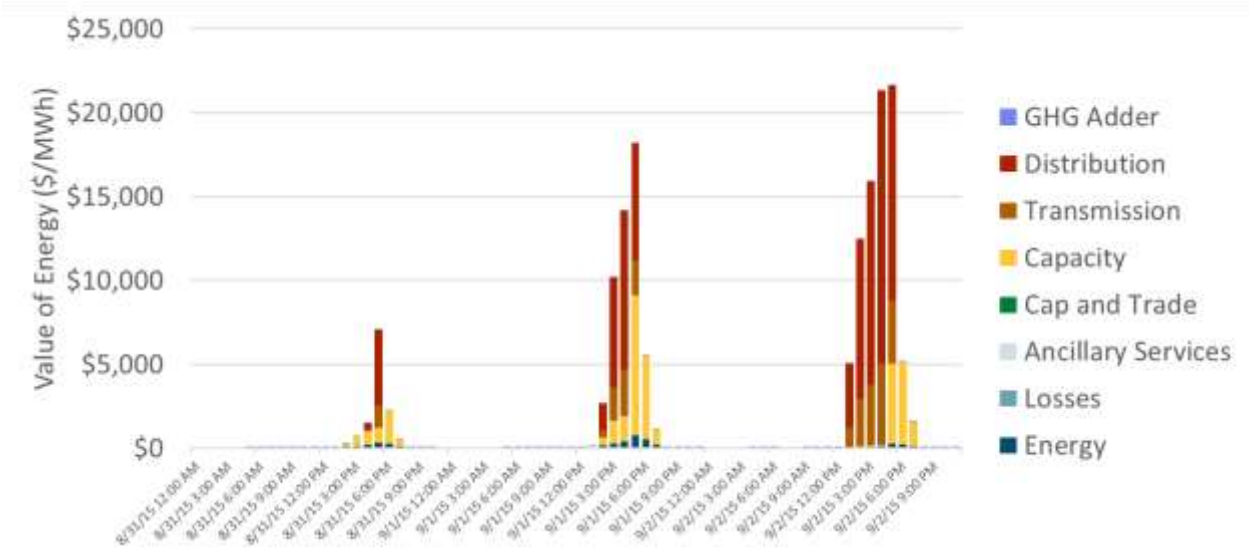

Source: E3

Figure 32 and 33 shows average monthly value of electricity reductions, revealing the seasonal characteristics of the avoided costs. The energy component dips in the spring, reflecting low energy prices due to increased hydro supplies and imports from the Northwest; and peaks in the summer months when demand for electricity is highest. The value of capacity—both generation and T&D—is concentrated in the summer months and results in significantly more value on average in these months.

Figure 32: Average Monthly Avoided Cost in CZ4 in 2018

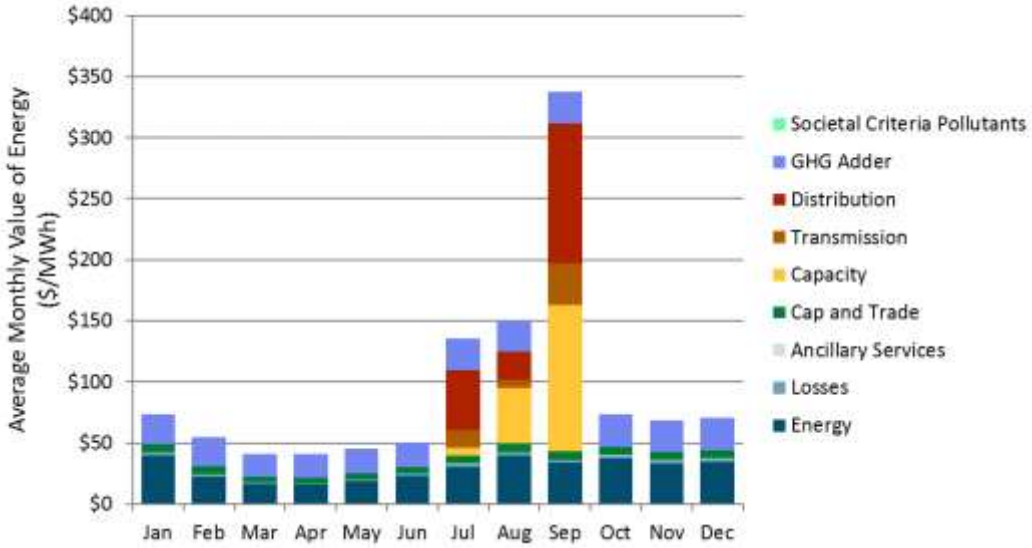

Source: E3

Figure 33: Average Monthly Avoided Cost in CZ4 by Hour of the Day in 2018

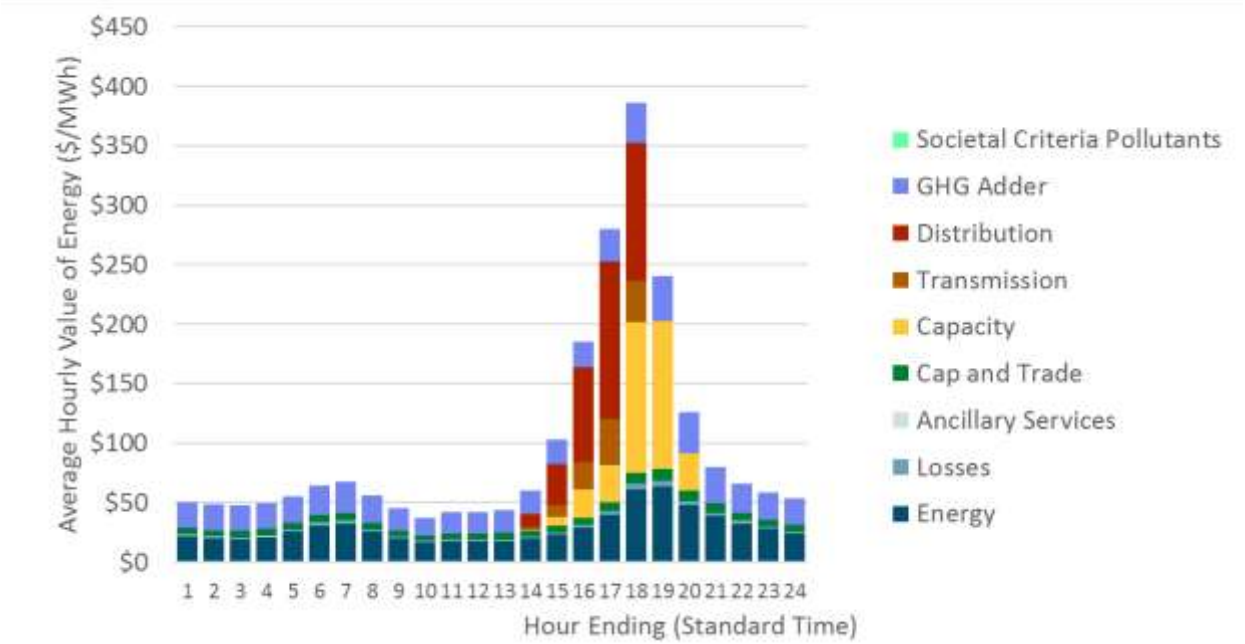

Source: E3

California Independent System Operator Energy and Ancillary Service Market Revenues

In place of the energy prices from the 2018 Avoided Cost Calculator Update, system planning cases from the CPUC Integrated Resources Planning (IRP) proceeding are used to develop hourly energy and ancillary service prices. With resource portfolios from the IRP cases, the AuroraXMP production simulation model is used to produce energy and ancillary service prices for a base and high value case for V2G. The reference plan designed to limit statewide GHG emissions to 42 million metric tons (42 MMT) is used for the base case (Figure 34). Cases with more aggressive GHG and RPS targets produce more volatile market prices that provide higher revenues for flexible resources like energy storage and V2G enabled PEVs (Figure 35). A CPUC IRP scenario achieving an 80 percent RPS is used to develop hourly prices for the high value case. [7] Note that the negative prices during the middle of the day and the high prices in the evening compensate flexible resources for reducing the evening ramp.

[7] Details on the 42 MMT reference plan and additional sensitivities, including the 80 percent RPS case are available at: http://cpuc.ca.gov/irp/proposedrsp/

Figure 34: Average Hourly Energy Prices in 2030 – High Value Case

Month \ Hour	1	2	3	4	5	6	7	8	9	10	11	12	13	14	15	16	17	18	19	20	21	22	23	24
1	54.55	53.91	54.76	54.70	54.21	54.32	55.54	55.98	55.93	50.54	50.16	50.92	50.25	47.47	42.92	49.01	51.92	52.89	55.94	54.64	54.19	54.41	55.96	55.39
2	51.67	52.02	52.01	51.55	51.60	51.83	53.87	54.15	52.10	43.31	39.58	39.03	39.10	39.95	37.07	40.50	49.67	50.90	53.08	53.40	52.29	51.04	52.98	51.50
3	48.43	47.91	47.61	47.63	47.41	47.87	49.10	49.01	37.50	33.93	30.38	20.97	19.35	27.16	28.61	34.70	44.12	47.98	48.98	49.50	49.65	49.49	48.85	48.13
4	42.35	42.91	42.97	42.70	42.40	43.14	43.69	36.22	27.46	23.45	20.36	4.09	-2.32	11.41	24.31	32.02	37.81	44.13	46.73	46.54	46.47	46.56	46.41	43.83
5	42.15	42.57	42.44	42.44	42.45	42.86	41.66	31.41	21.33	20.21	17.26	16.05	16.96	18.10	24.73	31.22	34.32	42.16	45.06	45.87	45.66	46.49	46.76	43.48
6	45.15	45.93	45.98	45.90	45.14	45.15	43.20	38.85	30.47	28.79	26.33	21.45	22.31	24.90	32.23	34.95	42.26	48.10	50.12	48.42	47.35	49.71	49.60	45.47
7	49.38	49.86	50.59	50.31	51.60	52.87	48.33	44.28	38.90	36.17	35.61	35.44	34.72	35.22	41.21	44.10	47.59	51.18	53.84	53.42	50.89	52.72	51.86	50.41
8	53.44	53.09	52.51	51.42	52.14	52.25	50.87	44.99	38.58	37.64	37.01	36.29	37.48	37.01	43.42	46.16	49.10	54.80	56.96	54.62	51.93	53.97	53.80	52.25
9	52.61	52.31	51.28	50.12	50.51	51.22	50.32	45.33	39.61	38.39	35.85	36.48	36.50	38.03	43.22	47.12	50.07	55.03	54.94	53.82	54.99	55.30	53.88	52.94
10	49.41	49.14	48.40	47.90	48.07	49.05	50.66	49.81	39.49	39.51	34.44	34.23	34.37	36.71	40.92	45.72	49.15	50.85	52.71	53.36	52.29	52.89	51.44	49.54
11	50.74	50.87	51.70	51.61	51.44	51.33	52.04	50.98	45.54	43.55	43.10	40.24	39.31	38.56	40.92	47.23	50.26	50.85	52.20	51.67	51.38	52.23	52.14	51.37
12	54.77	54.62	54.04	53.46	53.45	53.04	54.35	54.87	55.22	52.71	53.53	51.31	48.50	46.95	44.02	49.76	50.81	53.44	55.59	54.94	55.45	54.35	55.46	55.16

Source: E3

Figure 35: Average Hourly Energy Prices in 2030 – High Value Case

Month \ Hour	1	2	3	4	5	6	7	8	9	10	11	12	13	14	15	16	17	18	19	20	21	22	23	24
1	42.26	42.65	44.15	45.26	45.88	46.92	44.20	45.59	50.18	36.22	22.99	19.80	20.50	20.27	24.99	35.29	41.22	41.00	40.26	39.33	39.75	40.02	40.79	42.30
2	42.19	42.86	44.01	44.42	44.90	44.32	44.58	43.22	38.69	26.16	-0.17	-7.78	-8.07	-8.56	-8.32	20.98	36.97	37.85	38.49	38.91	38.86	41.08	42.65	42.60
3	37.14	37.94	37.91	37.52	36.71	36.01	34.59	35.18	15.95	0.53	-28.74	-30.00	-30.00	-30.00	-30.00	-17.12	25.71	32.14	33.55	34.93	34.57	35.03	36.99	37.17
4	31.40	30.43	31.19	31.20	29.66	30.89	26.57	19.79	0.58	-24.58	-30.00	-30.00	-30.00	-30.00	-30.00	-30.00	14.60	20.26	29.52	28.67	31.48	33.33	36.46	34.42
5	30.01	30.01	28.27	26.91	26.39	24.63	25.40	10.12	-1.49	-13.75	-14.67	-24.44	-22.88	-16.91	-9.36	-1.57	23.03	23.42	33.48	30.48	30.85	36.80	42.87	34.74
6	39.43	38.03	38.68	38.62	38.63	38.04	34.96	28.01	16.61	-0.11	-8.55	-16.69	-21.32	-22.23	10.58	19.66	28.80	30.46	40.77	42.29	37.66	40.51	45.99	40.80
7	46.48	47.44	47.84	47.89	47.80	48.79	42.31	34.50	20.17	18.27	17.55	9.41	0.28	6.70	28.47	37.61	43.38	53.65	69.86	64.66	54.89	51.13	52.89	47.58
8	52.62	52.21	52.34	51.59	51.12	51.25	48.87	36.59	21.26	19.60	7.74	-5.96	-7.01	2.40	30.41	43.01	44.40	64.91	82.78	75.45	60.48	62.87	62.23	51.45
9	54.22	52.46	49.61	46.70	47.38	48.33	49.81	35.89	20.28	12.84	-2.06	-6.09	-7.51	-3.49	25.09	37.51	48.83	78.91	75.23	63.94	64.11	58.06	57.81	54.96
10	47.01	46.90	45.81	45.12	43.01	44.49	52.31	42.04	13.29	-0.05	-22.96	-25.67	-25.85	-18.75	20.61	37.70	54.40	71.15	79.24	67.13	56.06	52.97	48.31	48.79
11	43.81	43.42	43.25	43.31	43.59	43.80	46.82	46.48	26.54	16.28	-3.50	-13.00	-6.97	-2.71	25.09	38.58	44.28	44.17	43.90	43.09	45.52	47.51	48.79	44.30
12	42.92	43.35	44.12	45.57	45.58	45.32	42.94	45.15	45.34	36.75	28.50	27.39	27.29	30.21	34.07	40.56	45.41	46.20	44.24	43.77	42.25	42.73	44.70	43.41

Source: E3

The relationship of frequency regulation prices to energy prices are illustrated by season in Figure 36 and Figure 37. For the base case, these relationships are based on current market conditions when fossil fuel plants are often on the margin. For the high value case the project team envisions a regime where energy storage is the dominate resource for frequency regulation. This reduces the potential market revenues from ancillary services relative to energy markets substantially.

System Capacity Value

The CPUC Avoided Cost Calculator sets the resource balance year to 2018 by default. This represents the capacity value as the full cost of new entry (CONE) for a new combustion turbine starting in 2018. This is done to reflect the position of energy efficiency and demand response as first in the Energy Commission 'loading order' for energy resources. For the base case, the resource balance year is set to 2040. This is reflective of the actual market today, in which RPS driven procurement of renewable generation has resulted in a large planning reserve margin and relatively low prices for resource adequacy, $36/kW-Yr. for 2016-2020.[8] Thus, for the base case the system capacity value starts at $76/kW-Yr. in 2018 and rises to $121/kW-Yr. in 2030. For the high value case, with the resource balance year set at 2018, the capacity value starts at $124/kW-Yr. in 2018 and rises to $144/kW-Yr. in 2030.

[8] CPUC Energy Division Working Draft Staff Proposal, "Current Trends in California's Resource Adequacy Program" February 16, 2018, available at: http://www.cpuc.ca.gov/WorkArea/DownloadAsset.aspx?id=6442457193

Figure 36: Relationship of Energy and Frequency Regulation Prices (Base Case)

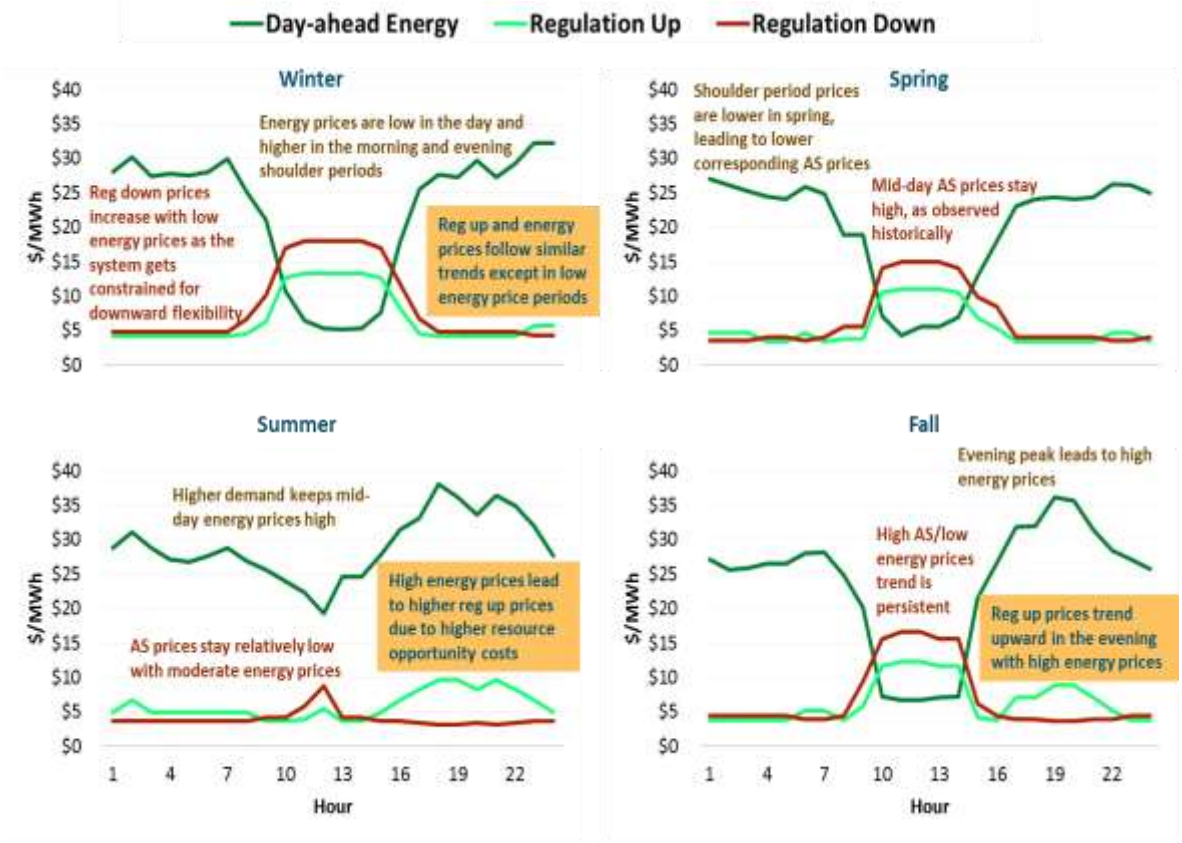

Source: CPUC Energy Division

Figure 37: Relationship of Energy and Frequency Regulation Prices (High Value Case)

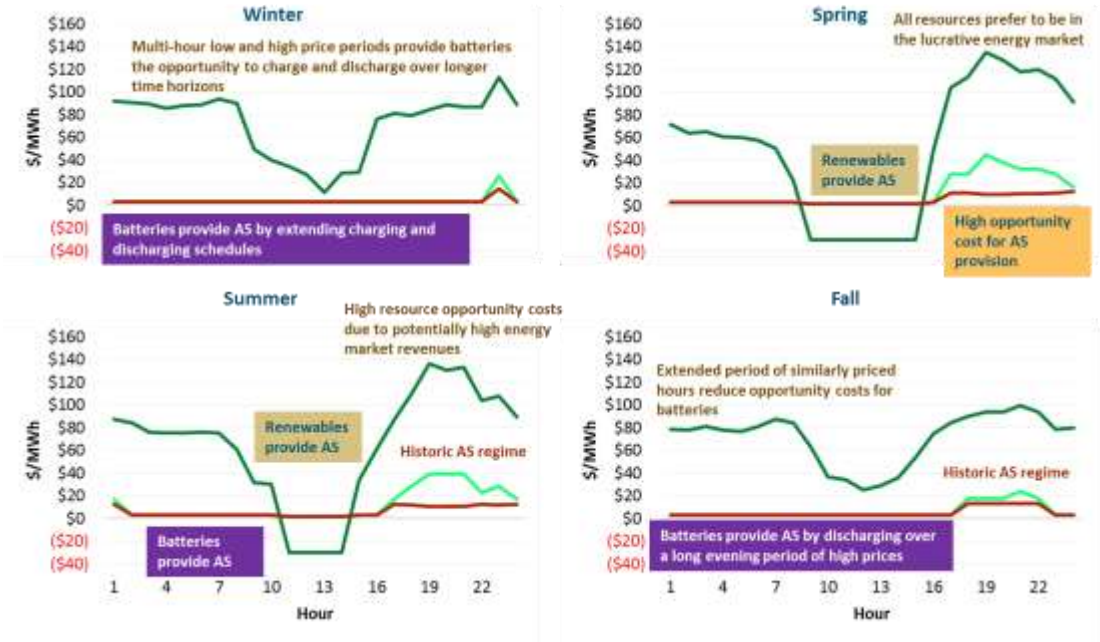

Source: CPUC Energy Division

Distribution Value

Distribution avoided costs are very location specific. Figure 38 shows distribution avoided costs by planning area for the three IOUs. A limited number of locations have a high value above $100/kW-Yr. whereas most locations have a value below $50/kW-Yr. For the base case a lower value of $20/kW-Yr. is used for distribution avoided cost and in the high value case $120/kW-Yr. is used.

Figure 38: Distribution Avoided Costs by Planning Area

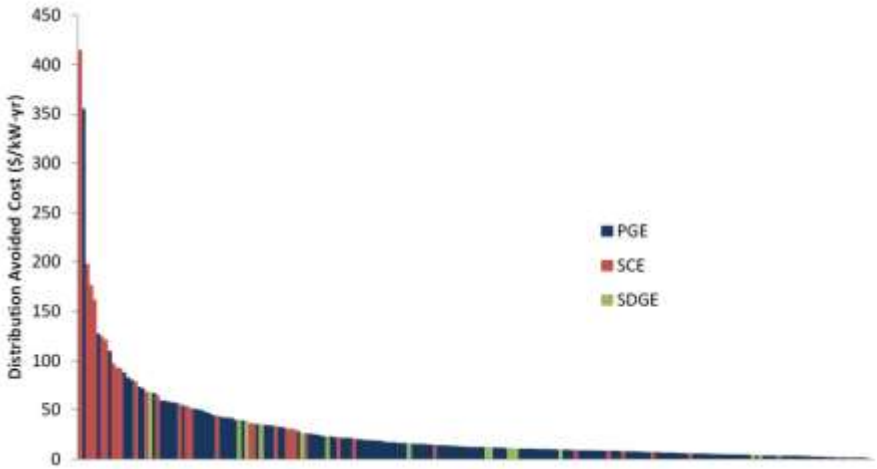

Source: E3

San Diego Gas & Electric Company Rates

Under "customer control" mode, SDG&E rates rather than utility avoided costs are used as a price signal for PEV dispatch. The SDG&E PEV-TOU rate is used as the signal for home dispatch, and the SDG&E TOU-M rate was used for the work dispatch.

Vehicle and Charging Equipment Assumptions

The analysis of benefits is simplified by modeling a fleet of five PEVs using Chevy Volt (BEV) vehicle characteristics. The vehicles are assumed to have an energy of 60 kWh and a charging capacity of 6.6 kW, which is set by the capacity of an L2 charger. Vehicles have access to L2 charging at both a work location and a home location but have no access to public charging. Apart from the unconstrained case, PEVs were modeled with a degradation factor of $0.052 / kWh discharged which served as a deterrent to PEVs taking advantage of energy arbitrage or bidding into regulation markets at any given opportunity. This served as a constraint to ensure that PEVs were only discharging when the effective export rate was greater than $0.052 / kWh degradation penalty. In addition, PEVs were penalized for leaving a pre-set SOC range of 30 – 95 percent. The unconstrained PEV case could run without any of these penalties, leading to high battery mileage, but increased revenues.

Overview of V2G Benefits

V2G grid services can provide a variety of benefits, but four benefit categories provide the bulk of the potential value.

- System Capacity: Reducing net load during system peak hours
- Distribution Capacity: Reducing net load during distribution peak load hours
- Load Shifting: Shifting load to periods of lower cost energy and to reduce system operational costs
- Ancillary Services: providing ancillary services in California ISO markets

Price Signals and Dispatch Behavior

The Solar + Storage dispatch optimization and valuation tool is used to generate PEV daily dispatch behavior. The PEVs are modeled with three dispatch approaches, unmanaged charging, smart charging (V1G), and V2G under a variety of use case scenarios. The use case scenarios that were modeled are listed in Table 4, and the dispatch charts presented below will highlight the differences in the three dispatch approaches under different use cases.

Table 4: Dispatch Approaches and Base Cases Run

Unmanaged Charging	V1G	V2G
Base Case	V1G Base Case	V2G Base Case
	Base Case + Distribution Deferral	Base Case + Distribution Deferral
		Base Case + Distribution Deferral + AS
		Unconstrained Case

Source: EPRI

Each case modeled provided an additional revenue stream for each of the dispatch approaches, shown in Table 5. For example, in the V2G cases, the model ran with a base case with energy arbitrage and capacity benefits as its primary revenue streams. The second case added access to distribution deferral as a revenue stream, while the third case included access to the ancillary services market. The final case run was an unconstrained case where the PEV had access to all of the above revenue streams and was dispatched without limitations on battery degradation or SOC.

Table 5: Dispatch Approaches and High Cases Run

Unmanaged Charging	V1G	V2G
High Case	V1G High Case	V2G High Case
	High Case + Distribution Deferral	High Case + Distribution Deferral
		High Case + Distribution Deferral + AS
		Unconstrained Case

Source: EPRI

A set of high value cases were run, with a set of more optimistic projections for capacity value, distribution deferral value, ancillary service and energy prices. In addition, these cases were run in both customer control mode, where PEVs were dispatching for bill reduction, and utility control mode, where PEVs were dispatching to minimize utility avoided costs.

Distribution Peak Reduction

One of the primary benefits that smart charging provides is the ability to optimize dispatch for peak reduction. Figure 39 demonstrates the differences in dispatch behavior between unmanaged charging, V1G and V2G in a high renewable world during a day with solar overgeneration and a distribution peak. The V2G case clearly provides the most value to the utility, with a net benefit of $46 relative to the unmanaged charging case and a net benefit of $35 relative to the managed charging case, with the bulk of these benefits coming from peak reduction which is unique to V2G vehicles.

Figure 39: Illustrative PEV Dispatch for a Single Day

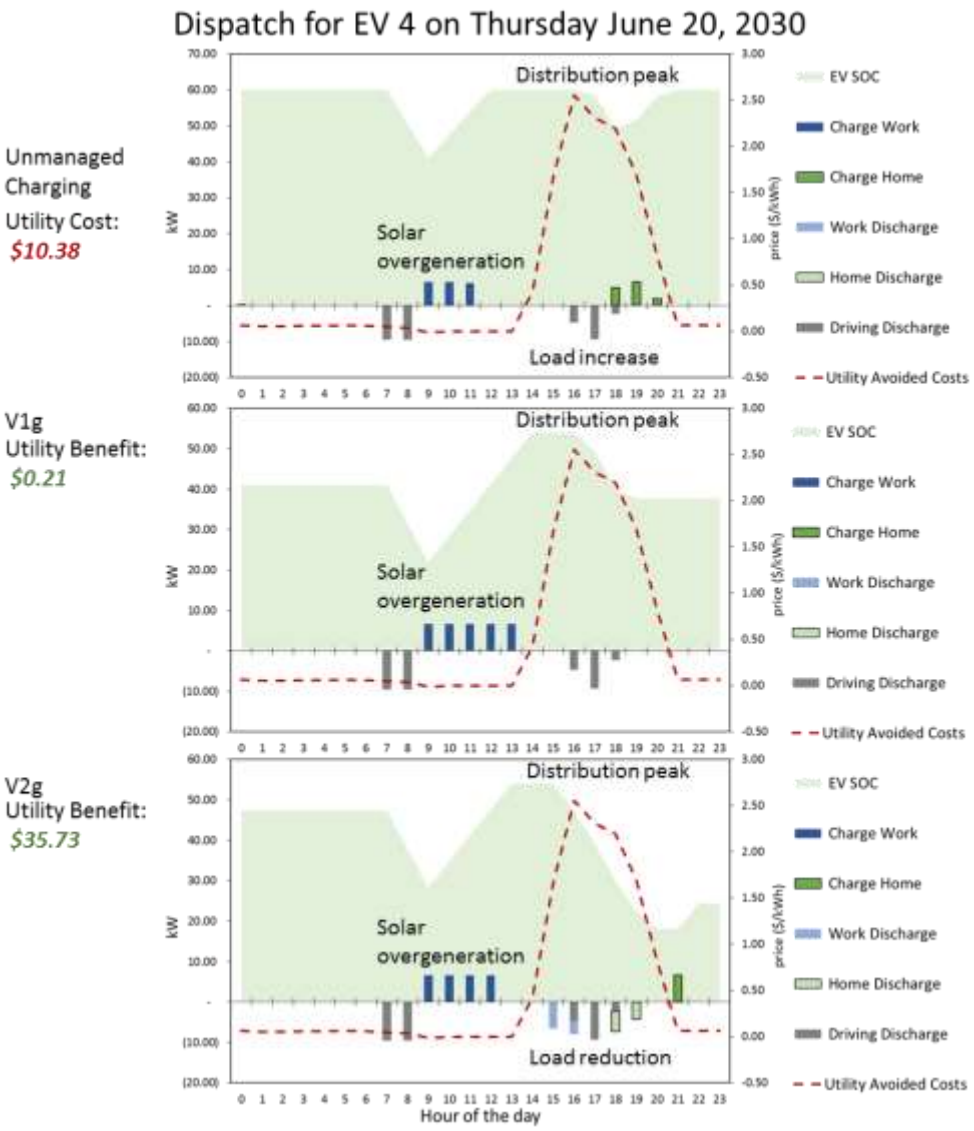

Source: E3

The unmanaged PEV is modeled to charge whenever a charger is available, until its maximum state of charge is reached. Unmanaged charging represents an increase in utility costs on this day, as the driver charges their vehicle upon returning from work at 6 PM, which adds load to the monthly distribution peak.

The V1G case is modeled to try to charge during hours of low utility avoided costs. In the V1G case, the smart charging electric vehicle can take advantage of negative prices during solar over-generation resulting in a net utility benefit of $0.21. In addition, the smart PEV does not charge during distribution peak hours 18 – 20, which is when the unmanaged vehicle provided a load increase. However, it does not provide any additional benefit over the unmanaged case in hours 15 – 17 because the unmanaged vehicle was not charging from the grid during these hours.

The V2G case provides the highest benefit to the utility, as it is the only vehicle that can discharge during the entire distribution peak from hours 15 - 20. During the distribution peak, the vehicle cannot provide load reduction when driving home from work, but it attempts to discharge as much as it can whenever it is connected to the grid, which results in a net utility benefit of $35.73.

Solar over-generation

During days with solar over-generation and corresponding negative prices, V2G vehicles can generate significant benefits relative to V1G vehicles by discharging before the over-generation hours. As shown in Figure 40, this morning discharge gives V2G vehicles more "space" than V1G vehicles to charge during solar overgeneration (33 kWh vs 4.2 kWh).

Figure 40: PEV Dispatch During Solar Overgeneration

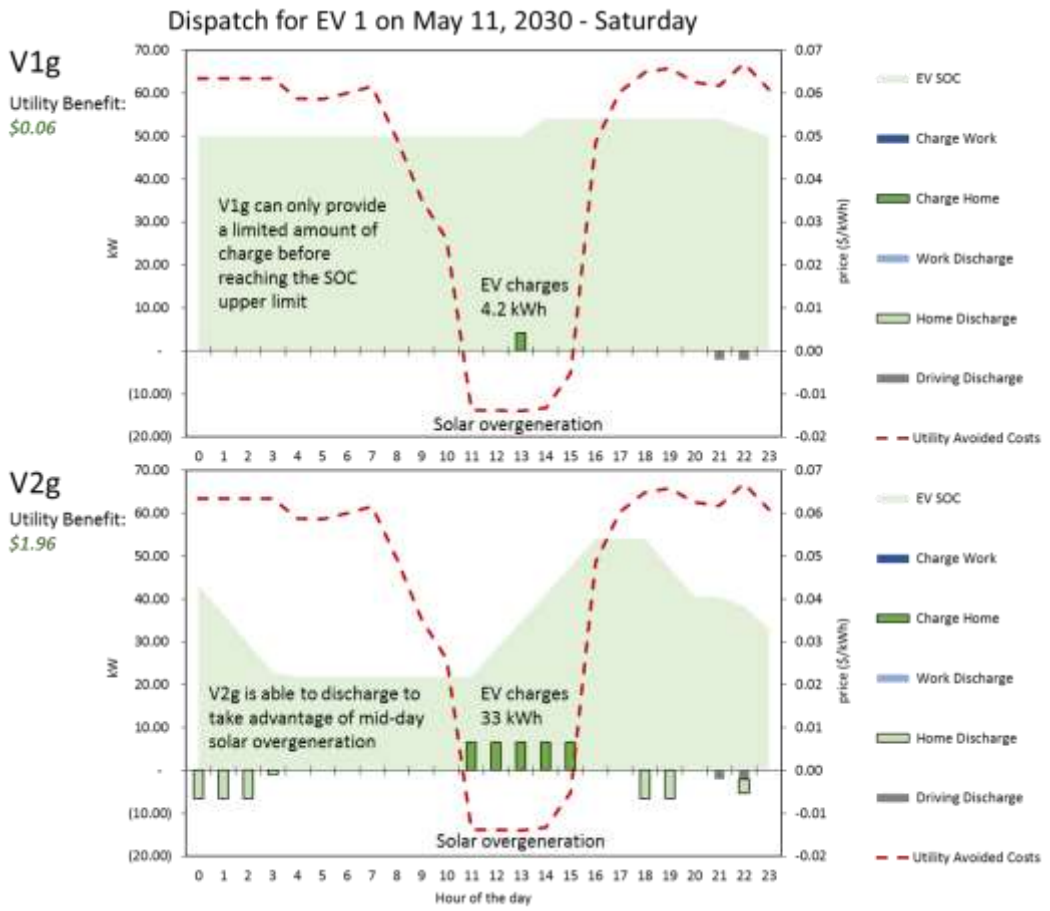

Source: E3

This behavior primarily occurs when V1G vehicles have short commutes or begin their day with a high state of charge. Because V1G cars can only impact their state of charge in one direction, if a V1G vehicle begins the day with 90 percent SOC, it will only be able to provide 10 percent of its SOC for load during solar overgeneration hours. On the other hand, in this case the V2G vehicle discharged to 35 percent SOC so that it could provide 33 kWh of charging during solar overgeneration hours.

It is important to note that the benefits provided from V2G solar overgeneration days are small relative to the benefit achieved on peak capacity days (net benefit $1.90). In addition, situations like the one shown in Figure 40 do not occur at a high frequency throughout the year. Generally, V1G PEVs have enough "space" to provide more charge than in this case.

Unconstrained and Constrained Frequency Regulation

Figure 41 demonstrates the differences in dispatch behavior between an PEV with state of charge constraints and one which can dispatch freely. As discussed in the "Vehicle and charging equipment assumptions" section, PEVs in the constrained cases were subject to battery cycling and SOC limits.

Figure 41: Constrained and Unconstrained PEV Dispatch

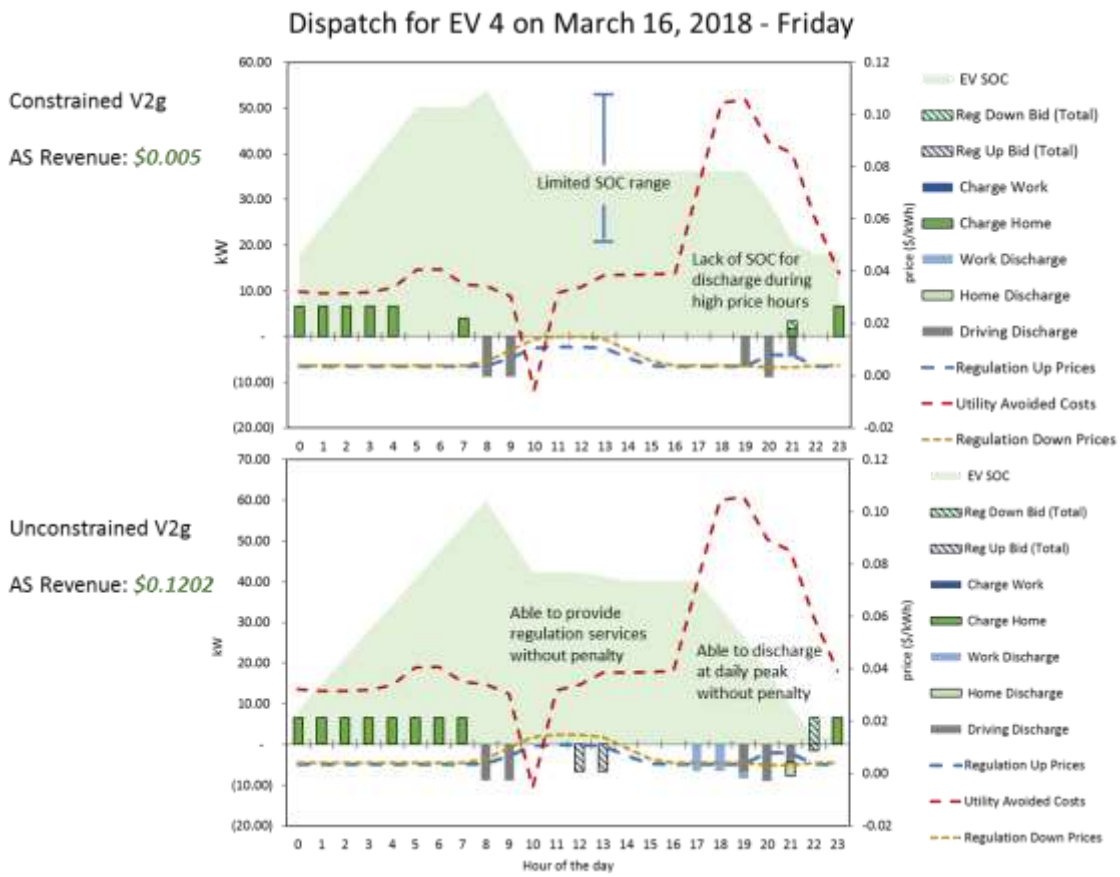

Source: E3

Due to the SOC limitations of the Constrained V2G case, there was no opportunity for the PEV to discharge during high price hours, because any discharge would incur a penalty for falling below 30 percent SOC. In addition, the benefit from participating in the regulation market in hours 12 and 13 were lower than the degradation of the cost of the battery, so there was no regulation up bid for the constrained case. In contrast, the unconstrained case discharged at the daily peak and provided regulation services freely to reduce utility costs over the course of the day by $0.60.

Net Benefits of V2G

For each case that was run, the Solar + Storage valuation tool compiles the results of the daily dispatch to generate total levelized costs and benefits for each dispatch approach. Real levelized cost benefits for PEVs across the PEV lifetime are shown in the Figures below.

Grid Benefits - Utility Control

Figure 42 presents a breakdown of the costs and benefit streams associated with an electric vehicle for the three different dispatch approaches under E3's base case assumptions. The results presented are shown in real levelized dollars/year for a single electric vehicle. Smart charging provides a significant 62 percent cost reduction from the unmanaged case, due to the ability to shift load growth away from peak hours. However, the $155 in cost reduction gained by moving from unmanaged to managed charging pale in comparison to the $407 in benefits gained by moving from V1G to V2G. As shown in the daily operations charts, this is primarily because V2G vehicles are uniquely able to provide peak reduction, capture ancillary service revenue and to a smaller degree provide energy arbitrage during solar overgeneration.

Figure 42: Levelized Costs and Benefits for Base Case PEV

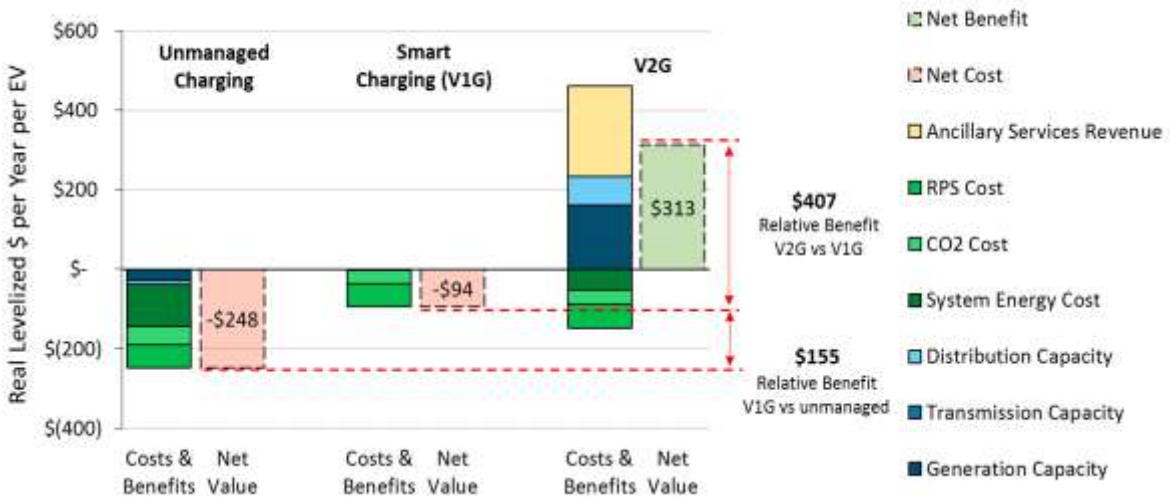

Source: E3

The cost and benefit streams for all vehicle dispatch approaches under the base case are shown in Figure 43. There is a consistent progression in benefits from unmanaged charging to V2G charging with AS market access. Under a base case scenario, the ability for PEVs to access to AS market results in a benefit $70 per PEV per year.

Figure 43: Levelized Costs and Benefits for Base Case with AS

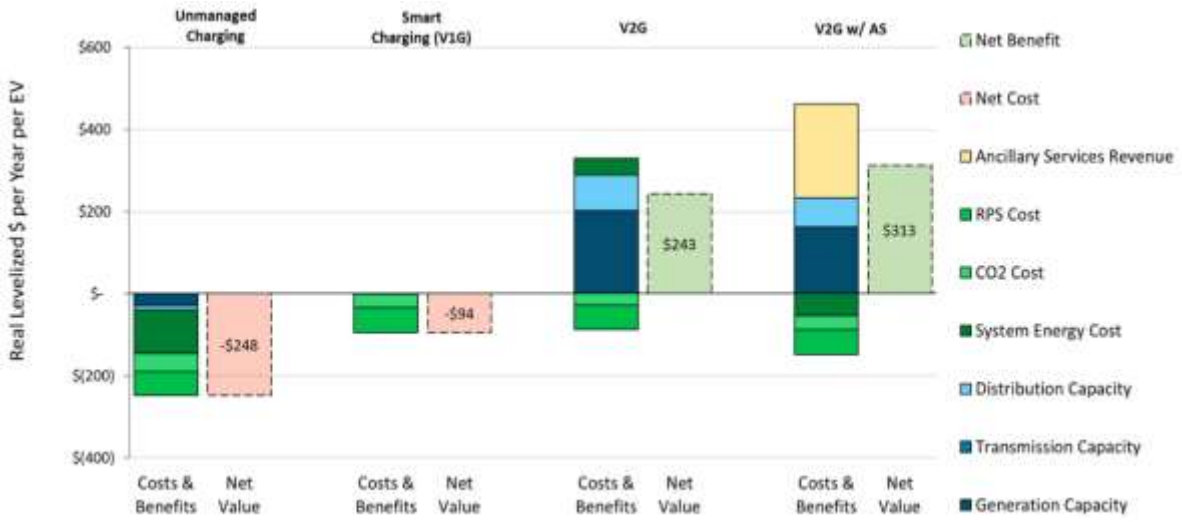

Source: E3

Figure 44 shows summary of the costs and benefit streams associated with an electric vehicle under different dispatch approaches using E3's high case assumptions. This high case assumes a high renewable future with higher system and distribution capacity values.

Figure 44: Levelized Costs and Benefits Under E3 High Case

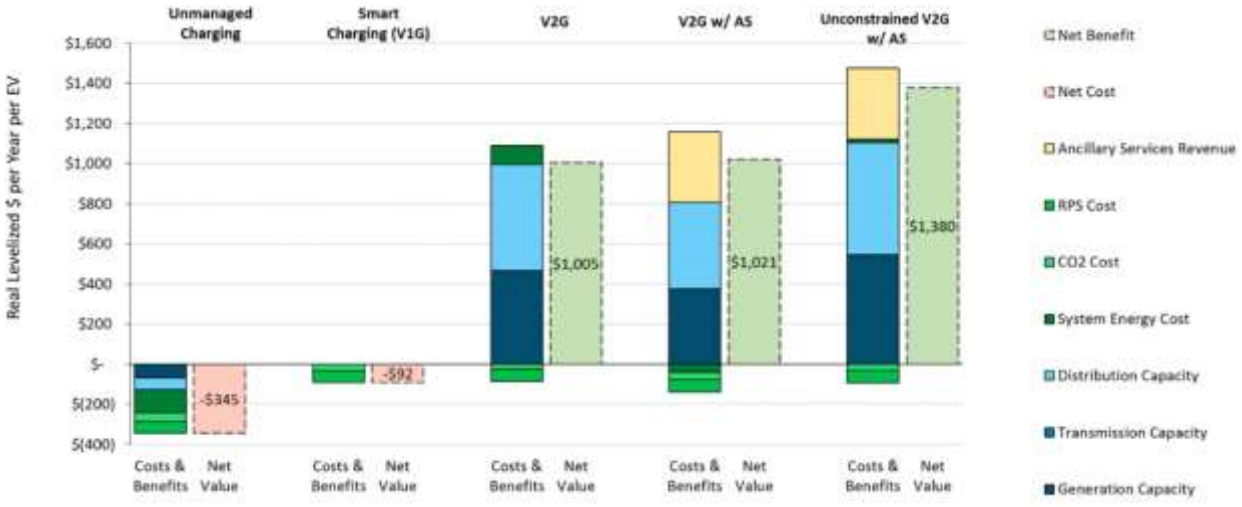

Source: E3

The high case values amplify the effects seen in the base case, with much of benefits coming from V2G capacity reduction. The net benefit from a high value V2G case is over three times larger than the benefit from V2G is a base case.

When PEVs have access to the ancillary services market in a high value scenario, the dispatch trades off energy arbitrage and capacity reduction opportunities to capture ancillary service revenues during high value hours. The incremental benefit associated with access to AS

markets is smaller than the base case due to the higher values attributed to system and distribution capacity. Due to degradation and SOC penalties, there is not much additional benefit ($16) when the PEV has access to an AS market, as shown in the daily dispatch operations. However, if the PEV can participate in an AS market with no constraints on battery degradation or SOC, there is a significant benefit of $1,725 per PEV per year relative to an unmanaged case. This is seen as the highest potential benefit that an unconstrained PEV can provide to the grid.

Customer Benefits - Customer Control

Figure 45 represents cost and benefit streams when PEVs are dispatched against utility TOU rates in "customer control" mode. The SDG&E PEV-TOU rate is used as the signal for home dispatch, and the SDG&E TOU-M rate was used for work dispatch.

Figure 45: Customer Control Cost and Benefits under Base Case Assumptions

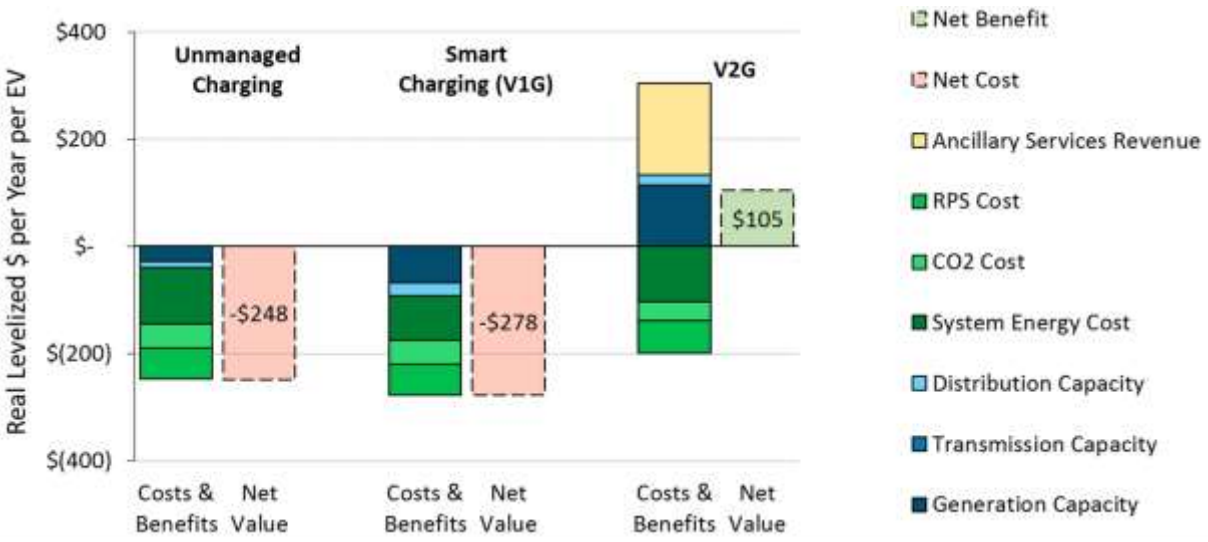

Source: E3

The fact that utility rates are not aligned with the utility costs of serving electricity leads to lower V1G and V2G benefits relative to the case where PEVs were dispatched against utility avoided costs. As PEV adoption increases, alignment of PEV rates with true utility avoided costs will be important to prevent situations like the one shown above, where smart charging leads to larger capacity costs than an unmanaged charging profile. Table 6 and Table 7 summarize the new grid value and incremental V2G benefits, respectively.

Table 6: Summary of New Grid Value

Case	Dispatch	Net Grid Value			Battery Use	
		Unmanaged	V1G	V2G	Battery cycles	Discharge Energy (kWh)
Unconstrained High Value V2G	Utility	($345)	($92)	$1,380	251	15,051
High Value V2G	Utility	($345)	($92)	$1,021	164	10,225
High Value V2G w/o AS	Utility	($345)	($92)	$1,005	133	7,969
Base V2G Case	Utility	($248)	($94)	$313	158	9,454
Base V2G Case w/o AS	Utility	($248)	($94)	$243	105	6,322
Base V2G Bill Optimized Case	Customer	($248)	($278)	$105	155	9,325

Note: Net grid value are the grid benefits – the cost of delivered energy for PEV charging. Cost for the PEV, EVSE, V2G equipment and enabling technology are not included.

Source: E3

Table 7: Summary of Incremental Benefit of V2G

Case	Dispatch	Incremental Benefit	
		V1G vs Unmanaged	V2G vs V1G
Unconstrained High Value V2G	Utility	$253	$1,472
High Value V2G	Utility	$253	$1,113
High Value V2G w/o AS	Utility	$253	$1,097
Base V2G Case	Utility	$154	$407
Base V2G Case w/o AS	Utility	$154	$337
Base V2G Bill Optimized Case	Customer	($30)	$383

Note: Incremental benefits are the grid benefits – the cost of delivered energy for PEV charging. Incremental costs for the PEV, EVSE, V2G equipment and enabling technology are not included.

Source: E3

Benefits for California Ratepayers

The potential benefits of V2G to California ratepayers are calculated using the base case annual benefits of V2G relative to smart charging (V1G) of $407 per PEV in Table 8. The medium PEV forecast reaches 3.3 million PEVs in California by 2030 whereas the high forecast is 5.0 million. Assuming 50 percent of the PEVs are V2G enabled, the potential annual benefits are approximately $670 million in the medium forecast and $1,020 million in the high forecast. Note that these are very rough estimates that do not account for market price impacts of many PEVs participating in energy and ancillary service markets. These are an estimate of potential

benefits only and do not include any PEV, EVSE or enabling technology costs to provide V2G services.

Table 8: Potential Ratepayer Benefits in 2030

	Medium PEV forecast	High PEV Forecast
Million PEVs in 2030	3.3	5.0
percent V2G Enabled	50 percent	50 percent
Base Case Annual Value per PEV	$407	$407
$ Million Annual Benefit	$671	$1,018

Source: E3

Conclusions and Recommendations

The potential grid benefits of V2G PEVs are calculated using CPUC avoided costs updated in June 2018. The avoided costs are supplemented with energy and ancillary service price forecasts developed based on CPUC IRP planning cases. The 42 MMT reference plan is used for the base case and the 80 percent RPS portfolio is used for the high value case.

The driving patterns for a fleet of five PEVs (Chevy Bolts) are modeled with probability distributions developed from the 2017 National Household Travel Survey. While the PEVs are plugged in, both at home and at work, the Energy Commission Solar + Storage tool is used to optimize the charging and discharging of the PEVS to minimize costs and maximize revenues. Three cases are modeled, unmanaged charging, smart charging (V1G) and bi-directional charging (V2G). The benefits for the three cases are calculated for both a base case and a high value scenario.

In the base case, the levelized annual benefits of V2G over smart charging are $407 per PEV. The potential benefits are grid benefits minus the cost of delivered energy for PEV charging – no costs for PEV, EVSE or V2G enabling technology are included. Based on these results, if V2G capability can be enabled for less than $407 per PEV, V2G could provide net benefits for California. For a limited number of congested locations with both high system and distribution capacity value, the potential benefits of V2G could be as high as $1,100 per PEV.

There are three factors that result in a significant incremental benefit for V2G over managed charging. First, PEVs with shorter commutes (less eVMT) arrive with a relatively full battery, which limits the benefits that can be realized with smart charging alone. Second, once the PEV is fully charged, no grid services can be provided with managed charging. Finally, smart charging provides significant system and distribution capacity benefits only to the extent PEV charging is occurring during peak load hours.

In contrast, with V2G, the PEV can be fully utilized independent of the state of charge when arriving and when the PEV is charging. The battery can be fully utilized (within operating constraints) even if the battery is nearly full upon arrival. The ability to discharge to the grid effectively doubles the kW capacity available for peak load reduction, and the discharge can be

effectively timed to be coincident with peak loads independent of when the PEV would have been charging. These factors lead to significantly higher system and distribution capacity benefits with V2G relative to V1G.

The value of providing ancillary services with V2G is much lower in the high value case than the base case. The base case (42 MMT) has less volatile energy prices and less curtailment than the high value case (80 percent RPS). Thus, the frequency regulation market provides more revenue opportunity in the base case. Frequency regulation revenues of a net increase of $70 per PEV. In the high value case, frequency regulation prices are lower due to the entry of energy storage and there is a greater opportunity cost in lost energy market revenues to provide frequency regulation and the increase in net benefits is only $16 per PEV. The total size of the frequency regulation market in California is relatively small, roughly 350 MW each for regulation up and regulation down. With Level 2 charging at 6.6 kW, this market could theoretically be serviced by just over 100,000 PEVs. Even triple that number is still less than six percent of the Governor's goal of 5 million ZEVs by 2030. These findings suggest that capacity value (both system and distribution) and load shifting could be the most valuable markets for V2G, without the complications of bidding behind-the-meter resources into California ISO ancillary services markets.

Smart charging dispatched to reduce customer bills reduces grid benefits relative to unmanaged charging. This is a result of relatively broad TOU periods not being precisely aligned to the hours with the highest value to the grid. Similar results have been shown for the energy storage in the Self-Generation Incentive Program evaluations.[9] The grid benefits of V2G dispatched to customer rates is $105 per PEV compared to $313 in the base case under utility dispatch. For V2G to provide benefits to the electric grid and California ratepayers, utility dispatch signals or more dynamic rate designs reflective of the hourly grid value will be required.

Caveats

There are several caveats for this analysis. The impact of increased cycling on battery life is not well understood and additional constraints on operation may be required to maintain battery health. Furthermore, V2G services may void OEMs and battery manufactures warranties. This analysis is based on a small fleet of a single PEV type. Several variables may significantly alter the relative benefits of V2G over smart charging. These include the driving patterns and total eVMT for the PEVs, the length of time the PEVs are plugged in, the PEV battery size, and the charging level. For example, larger batteries and more eVMT could increase the benefits achieved with smart charging alone, and potentially reduce the incremental benefit of V2G.

[9] See 2016 SGIP Advanced Energy Storage Impact Evaluation available at: http://www.cpuc.ca.gov/General.aspx?id=7890

CHAPTER 5: Technology Transfer, Key Lessons, and Future Work

Technology/Knowledge Transfer

Technology/knowledge transfer activities are key to providing education and awareness about new strategic research and development initiatives, the technology application, proven technical feasibility, and potential societal and commercial benefits. The technology and knowledge transfer targets for this project are the technologists and decision makers within the utilities, automakers, regulatory and legislative agencies, state and federal technology research grant agencies, standards organizations, and energy industries.

Reporting

Knowledge transfer_activities consisted of reporting and reviews with multiple industry constituents participating in United States Department of Energy (USDOE) technology research and development factions within the Vehicle Technology Office (VTO), the Office of Energy Efficiency & Renewable Energy (EERE), and the Grid Interaction Tech Team (GITT). The project goals, objectives, technology, and learnings were also reported and reviewed at EPRI venues such as the EPRI Infrastructure Working Council and Electric Transportation Advisory Council meetings. These meetings included utilities' executive management, transportation electrification project managers, automakers, infrastructure manufacturers, electric vehicle service providers, and standards organization representatives. Additionally, the project has been reported and publicized at the Energy Commission's Annual California Multi-Agency Update on Vehicle-Grid Integration Research meetings and at the USDOE's Vehicle Technologies Office Annual Merit Review meetings.

This project achieved significantly expanded visibility through collaborative program relationships with the CPUC/NRG Electric Vehicle Storage Accelerator (EVSA) Project executed under the NRG/EVgo Settlement with the CPUC, and with the USDOE Office of Energy Efficiency and Renewable Energy (EERE) under Contract: DE-EE0007792 "Comprehensive Assessment of On-and Off-Board V2G Technology Performance on Battery and the Grid".

The collaboration with the EVSA Project, now under the cognizance of Nuvve, involved their development of an IEEE 2030.5 protocol based on-vehicle V2G communications module and integration into an existing V2G capable Honda Accord PHEV. The Honda vehicle is being integrated with the EPRI Transformer Management System V2G energy management monitoring and control architecture and included in the V2G technology demonstration under this project. Information on this project has been reported as part of the CPUC/NRG EVSA program reviews to the CPUC, Energy Commission, and constituent stakeholders.

The USDOE EERE Contract: DE-EE0007792 “Comprehensive Assessment of On-and Off-Board V2G Technology Performance on Battery and the Grid” is developing and demonstrating DC off-board V2G inverter technology implementation. The on-board V2G technology portion of the USDOE project is being developed and demonstrated under this project. The USDOE project is qualified as basis for matching contributions to this project, and leverages the communications technology being developed under this project. This project’s technology development and value assessments have been included in all reviews and reporting to the USDOE including the Annual Merit Reviews and Annual Business Reviews.

The project has also been discussed with the SAE Hybrid Communication and Interoperability Task Force. The SAE task force is responsible for the development and publication of the protocol standards for V2G communications and control being implemented in this project. Specific emphasis was on the SAE J3072 Interconnection Requirements for Onboard, Utility-Interactive Inverter Systems, which is being promoted to the CPUC Smart Inverter Working Group for consideration and adoption in the California IOU Rule 21 requirements for approval and permitting of Plug-In Electric Vehicle V2G onboard inverters for grid interconnection.

EPRI has direct involvement with several automakers (Ford, FCA, Daimler, BMW, GM, Nissan, Toyota, and Honda) through the Open Vehicle Grid Integrated Platform (OVGIP) Collaboration, ongoing since 2013. This project has been reviewed with the OEM representatives participating in the OVGIP Collaboration. The CPUC VGI Roadmap addresses V2G as a directional use case in the evolution of the implementation for VGI in California. This project provides knowledge about the feasibility of the V2G onboard technology for consideration by the OEMs.

EPRI has conducted numerous one on one briefings on the attributes and benefits of V2G technology and the project with United States and European utilities: Veridian in 2017, Avangrid in 2017, TriState GT in early 2018 and with international counterparts (EPRI International) in early 2018.

The final report will be summarized into an EPRI Research and Development report document that will be published and made available to its utility members in 2019. The final Fact Sheet has been completed and is being disseminated to interested parties as a summary of the project.

EPRI conducted an exhibit and demonstration of this project’s V2G system at the Electrification 2018 International Conference & Exposition in Long Beach, California Aug 21-23, 2018. This provided excellent exposure of the technology to attending industry stakeholders and the public. Particular value was the technology demonstration is being exhibited using actual FCA production Plug-In Electric Vehicles.

List of venues and dates at which this project has been presented and reviewed:

- EPIC Innovation Symposium Dec 2015
- Technology Review Meeting with Nissan Nov 2015
- Presentation to the OVGIP Automaker and Utility Collaboration Team Feb 2016/Nov 2017

- SAE Hybrid Communications and Interoperability Task Force May 2016/Mar 2017
- Energy Commission Third Annual California Multi-Agency Update on Vehicle-Grid Integration Research Dec 2016
- USDOE Grid Interaction Tech Team (GITT) Technical Review Meeting Feb 2017
- USDOE Office of Energy Efficiency and Renewable Energy (EERE) Contract: DE-EE0007792 for the Comprehensive Assessment of On-and Off-Board V2G Technology Performance on Battery and the Grid Annual Progress Meeting Mar 2017
- USDOE Vehicle Technologies Office (VTO) Contract: DE-EE0007792 for the Comprehensive Assessment of On-and Off-Board V2G Technology Performance on Battery and the Grid Annual Merit Review Jun 2017
- USDOE Office of Energy Efficiency and Renewable Energy (EERE) USDOE Budget Period 1 Business Review, Nov 2017
- Energy Commission Fourth Annual California Multi-Agency Update on Vehicle-Grid Integration Research Dec 2017
- SDG&E Interconnection Guideline Meeting Mar 2018
- Oak Ridge National Lab USDOE Status Review at ORNL May 2018
- EPRI Electric Transportation Advisory Committee Meeting Sep 2015/Feb 2016/Sep 2016/Feb 2017/Sep 2017/Feb 2018
- EPRI Infrastructure Working Council Meetings Mar 2017/Jun 2018
- USDOE Vehicle Technologies Office (VTO) Contract: DE-EE0007792 for the Comprehensive Assessment of On-and Off-Board V2G Technology Performance on Battery and the Grid Annual Merit Review Jun 2018

Key Lessons

This project is the first development, implementation, and demonstration of electric vehicle onboard V2G technology that is accomplished through the application of the cybersecure end to end requirements specified by the SAE J3072, SAE J2847/3, and IEEE 2030.5 standards. The project entailed the development and integration of new hardware and software and the implementation of the standards communication protocols into automakers' existing production Electric Vehicles (FCA and Honda) and AeroVironment EVSEs. EPRI provided an innovative utility integration strategy in the development of the TMS, enabling localized distribution circuit monitoring and control of residential PEV charging, facilitating utility integration for distribution reliability at the edge of the grid. The TMS is innovative, because it enables aggregation of residential clusters of PEV charging/discharging to optimize for load balancing at the transformer circuit level and utility access to PEVs as a grid resource. The project further identified the key implementation and adoption issues with the SAE J3072 vehicle interconnection authentication protocol and initiated a dialog with California utilities and the CPUC Smart Inverter Working Group to work toward creating uniform interconnection requirements for V2G capable PEVs.

The predominant lessons from the project are:

- The need for utility adoption of J3072.
- Effectiveness of TMS for residential transformer and community aggregation application.
- Local site electrical integration evaluation is required to identify transients affects.
- The preliminary assessment makes for a strong case for creating incentive structures for V2G.

A significant barrier to the commercialization of the PEV onboard V2G technology is the adoption of the SAE J3072 standard to enable automaker self-certification of onboard inverters to be CPUC Rule 21 compliant per IEEE 1547. The research team's recommendation is that compliance be achieved through PEV compatibility certification with UL marked bi-directional AC EVSEs. The site permit for grid interconnection will be based on the UL listing of the EVSE to be certified for bi-directional power flow. J3072 authenticates that the PEV inverter model has been certified to be compatible with the UL listed EVSE.

Second, the TMS monitoring and control strategy enables improved situational awareness for the utility to manage distribution reliability, and the ability to integrate PEV managed charging for aggregation at the residential transformer and community sub feeder levels.

Third, during the UCSD site demonstration, the system experienced circuit voltage and frequency anomalies that affected the continuity of communications between the TMS and the PEVs. The PEV onboard charge modules were recording error faults and going to sleep due to frequency and voltage spikes. The UCSD demonstration site circuit includes interconnectivity with DCFC chargers, battery energy storage system inverters, solar inverters, and multiple versions of EVSEs. Preliminary voltage and frequency measurements could not provide any conclusive information to the fault investigation.

Finally, the value and cost benefit assessment and modeling analysis show a cumulative maximum benefit of V2G to the grid (net of cost increment) to be between $450/year per vehicle to $1,850/year/vehicle. This effectively is approximately five times the value of V1G for similar grid service applications.

Table 9 provides a summary of the above learnings relative to the objectives and accomplishments of the project and the associated gaps to be addressed to achieve scaled implementation of electric vehicle and utility integrated V2G technology.

Table 9: Summary Lessons Learned Relative to Objectives and Accomplishments

Objectives	Accomplishments	Learnings	Gaps to Scale Implementation
Develop and implement end to end open standards-based V2G communications system	Validated end to end interoperability and application of V2G SAE and IEEE 2030.5 standards	J3072 requirement for utility adoption – compatibility certification with UL marked bi directional AC EVSE	Defined SAE J3072 Interoperability Certification body requirements and harmonized UL/SAE labeling
Implement dynamic V2G management use cases	TMS automated energy management capability implemented – supports interaction with DSO / ISO grid service requests	Effective for residential Transformer energy monitoring for constraints due to load and stress conditions – community aggregation application	Transformer Management System software can be integrated at any edge of the grid node – transformer, DMS, DERMS or Facility EMS
Data collection and performance analysis	Simulated data verifies algorithmic functionality – Demo data collection ongoing	Local site electrical integration evaluation required to identify transients affects – further research required	Implement more powerful 'edge of the grid' computing tech
Assess cost/benefit – customer, utility, and societal perspectives	Positive value proposition for EV owners (5X V1G)	The preliminary assessment makes for a strong case for creating incentive structures for V2G	Define, verify and validate through customer participation incentive mechanisms that are viable and acceptable to customers to maximize participation, along with cost analysis for additional hardware on vehicles
Define and implement on-vehicle V2G converter and integrate with grid power and communication systems	Integrated grid-tied bidirectional charger and J3072 client control module with on-vehicle battery and controller	System integration revealed grid interaction both in terms of compatibility, interconnection requirements and a need to define clearer electrical integration standards	Define electrical grid integration and compatibility requirements for on-vehicle inverters (or align them with the smart inverter requirements), including testing and interoperability protocols.

Source: EPRI

Scope for Future Work

Utilities, automakers, and the standards bodies need to further define SAE J3072 interoperability certification requirements and establish mutually acceptable criteria for verification of PEV compliance to IEEE1547 and UL 1741 SA standards required to meet CPUC Rule 21 grid interconnection compliance requirements.

There is a need to develop technical experiments to integrate the TMS software with multiple edge of the grid node distribution and energy management systems such as utility Demand Management Systems (DMS), Distributed Energy Resource Management System (DERMS), and Facility EMS for expanded localized and wide area distribution system integration,

In addition, there is a need to institute development for enhanced granularity of TMS data computational functionality for implementing more powerful 'edge of the grid' computing technology.

Electrical grid integration and compatibility requirements must be defined for on-vehicle inverters that will align and harmonize with the smart inverter requirements, including testing and interoperability protocols.

The technical feasibility and potential for value creation from engaging V2G for grid services are significant enough to warrant focusing on the following key activities:

- At-scale pilots engaging large number of customer-owned vehicles that are V2G equipped, deployed to generate data at scale, and is statistically significant to validate the real value of V2G.

- Create detailed circuit level models to enable assessment of locational net benefits of the V2G electric vehicles and value for participating in the Distributed Resource Proceeding (DRP) process.
- Create a design of experiments engaging a broad number of customer segments – both retail and fleet – to understand best case value scenarios and corresponding operational rules for grid integration
- Comprise a working group to draft and validate electric vehicle onboard V2G interconnection requirements for qualification as a 'generating resources' under California Rule 21.
- Conduct a broad-based value assessment using source data generated from a scale pilot to enable more precise estimation of value to the grid that is geospatially and temporally characterized for a range of customer segments.

LIST OF ACRONYMS

Acronym	Definition
ACES	Autonomous, connected, electric and shared mobility-based business models
AEO	Annual Energy Outlook
APP	Computing application
AV	AeroVironment Inc. (Now Wabasto)
BOB	Base off board protocol
BTM	Behind-the-meter
California ISO	California Independent System Operator
California ISO AS	California Independent System Operator ancillary services
CAN	Controller area network
CARB	California Air Resources Board
CPR	Critical program review
CPUC	California Public Utilities Commission
CT	Current transformer
DCAP	Device capability
DER	Distributed energy resource
DInfo	Device information
DNP	Domain name protocol
DR	Demand response
DSO	Distribution system operator
Duck Curve	Applies to the graphic depiction of the renewable over-generation and under-generation curve during the day based on the sun's irradiance between sun rise and sun down.
EDEV	End device
PEV	Electric vehicle
EVCC	Electric vehicle communications controller

eVMT	Plug-in electric vehicle miles traveled
EVSE	Electric vehicle supply equipment
FCA	Fiat Chrysler Automobiles
FSA	Function set assignments
FTP	File transfer protocol
GIR	Grid integration rate
GNA	Grid needs analysis
GMP	Grid modernization plan
GND	Ground
GP	GreenPhy power line Carrier
HEV	Hybrid electric vehicle
HP-GP	HomePlug GreenPhy
IEC/ISO	Joint technical committee of the International Standardization Organization and the International Electrotechnical Commission.
IEEE	Institute for Electrical and Electronics Engineers
IP	Internet Protocol
IRP	Integrated resource plan
ISM	Inverter system model
ISO	Independent System Operator
kWh	Kilowatt-hour
JSON	Java script object notation
KVA	Kilovolt ampere
LFDI	Long form device identifier
LNBA	Locational net benefits analysis
LTPP	Long term procurement plan
MaaS	Mobility as a service
mDNS	Multi-cast domain name server protocol, resolves hostnames to IP addresses with small networks without local name server
MMT	Million metric tons

NRC	National Research Council
OBC	On-board charger
OBCM	On-board charger module
OEM	Original equipment manufacturer (generic reference for large automakers
PCC	Point of common coupling
PEV	Plug-in electric vehicle
PF	Power factor
PHEV	Plug-in hybrid electric vehicle
PLC	Power line communication/power line carrier
PV	Photovoltaic
PwrStat	Power status
P2P	Point to point
RFL meter	Resistive fault locate capable meter
RPS	Renewable Portfolio Standard
RTO	Regional transmission operator
RTU	Remote terminal unit
SAE	Society of Automotive Engineers
SDK	Software development kit
SEP 2.0	Smart Energy Profile Version 2.0
SFDI	Short form device identifier
SLAC	Signal level attenuation characterization
SOC	State of charge
SNTP	Simple network time protocol
TAC	Technical Advisory Committee
TC	Transformer controller
TCIN	Time charge is Needed
TE	Transformer emulator
TFCH	Time to full charge

THD	Thermal harmonic distortion
THFF (TIF)	Telephone harmonic form factor (telephone influence factor)
TMS	Transformer monitoring system
TOU	Time of use
TPMU	Transformer power measurement unit
TPP	Transmission planning process
T&D	Transmission and distribution
UDel	University of Delaware
VAC	Voltage alternating current
VAR	Volt ampere reactive
VGI	Vehicle grid integration
VSL	Vehicle smart link
V1G	Vehicle from grid, unidirectional power flow for PEV charging from grid to PEV
V2G	Vehicle-to-grid, bidirectional power flow for PEV charging between grid and PEV

REFERENCES

Additional References not directly cited but important:.

IEEE2030.5-2013 IEEE Adoption of Smart Energy Profile 2.0 Application Protocol Standard. October 2013

SAE J1772 - SAE Electric Vehicle and Plug in Hybrid Electric Vehicle Conductive Charge Coupler. October 2012

SAE J3072 - Interconnection Requirements for Onboard, Utility-Interactive Inverter Systems. February 2015 (Draft)

SAE J2847/3 – Communication for Plug-in Vehicles as a Distributed Energy Resource. December 2013

SAE J2931 - Digital Communications for Plug-in Electric Vehicles

SAE J2931/1 Digital Communications for Plug-in Electric Vehicles

Energy Commission Project 14-086 Architecture Requirements V1 Document

Energy Commission Project 14-086 Architecture V1 Document

Energy Commission Project 14-086 System Requirements V3 Document

EVSE Communications and Requirements Design V1 Document

Squatriglia, C., 'GM Fires Up its Chevrolet Volt Battery Factory', Wired Magazine, 01/07/10, https://www.wired.com/2010/01/chevrolet-volt-battery-production/

Lambert, F., 'Electric Vehicle Battery Cost Fell 80 percent in 6 Years Down to $227/kWh, Tesla Claims it to be Below $190/kWh', Electric.co, https://electrek.co/2017/01/30/electric-vehicle-battery-cost-dropped-80-6-years-227kwh-tesla-190kwh/

'Electrifying Insights: How Automakers can Drive Electrified Vehicle Sales and Profitability', McKinsey & Company, January 2017, https://goo.gl/G9AhfY

Holland, Dr. Maximillian, 'Tesla Model 3 on the Verge of Disrupting BMW, Mercedes and Audi', CleanTechnica, 06/09/2018, https://cleantechnica.com/2018/06/09/mercedes-bmw-audi-on-verge-of-dramatic-disruption-from-tesla-model-3/

Governor Brown Takes Action to Increase Zero Emission Vehicles and Fund New Climate Investments, 01/26/18, https://www.gov.ca.gov/2018/01/26/governor-brown-takes-action-to-increase-zero-emission-vehicles-fund-new-climate-investments/

Electric Vehicles in Europe, European Environment Agency, 2016, https://www.eea.europa.eu/publications/electric-vehicles-in-europe/download

Tracking Electric Vehicle Progress, California Energy Commission, July 2017, http://www.energy.ca.gov/renewables/tracking_progress/documents/electric_vehicle.pdf

California Assembly Bill 32, https://www.arb.ca.gov/cc/ab32/ab32.htm

California Vehicle-Grid Integration Roadmap: Enabling Vehicle-Based Grid Services, California ISO, 2014, http://www.caiso.com/documents/vehicle-gridintegrationroadmap.pdf

CPUC Proceeding on California Storage Mandate http://docs.cpuc.ca.gov/PublishedDocs/Published/G000/M079/K171/79171502.PDF, retrieved 6/28/18

Open Distribution System Simulator (OpenDSS): http://smartgrid.epri.com/SimulationTool.aspx

EPRI Storage Value Estimation Tool (StorageVET): https://www.storagevet.com/

SB-32 California Global Warming Solutions Act of 2006: Emissions Limit, Text accessed on 6/28/2018; https://leginfo.legislature.ca.gov/faces/billNavClient.xhtml?bill_id=201520160SB32