2016 Energy Standards Overview – Lighting and Electrical

Daniel Wong
Appliances and Outreach & Education
Efficiency Division

City of South Lake Tahoe
October 27, 2017

Goals of this Presentation

- Identify and clarify the major changes in the 2016 Energy Standards for:
  - Indoor lighting
  - Outdoor lighting
  - Electrical power distribution systems
  - Sign lighting

QUESTIONS…

- Please feel free to ask at anytime:
  - During presentation, or after
  - Enhance today's session

A Little CEC History

- Section 25402 of the Public Resources Code (known as the **Warren Alquist Act**)
- The act created the Energy Commission in 1974 and gave it authority to develop and maintain Building Energy Efficiency Standards
- Requires the Standards and new requirements to be cost effective over the economic life of the structure
- Requires the Energy Commission to update the Standards periodically (about every 3 years)

2016 BUILDING ENERGY STANDARDS

2016 Building Energy Efficiency Standards

- Effective on January 1, 2017
  - Building permit applications submitted on or after this date
- For larger projects in design phase:
  - Need to resubmit if permits pulled on/after effective date

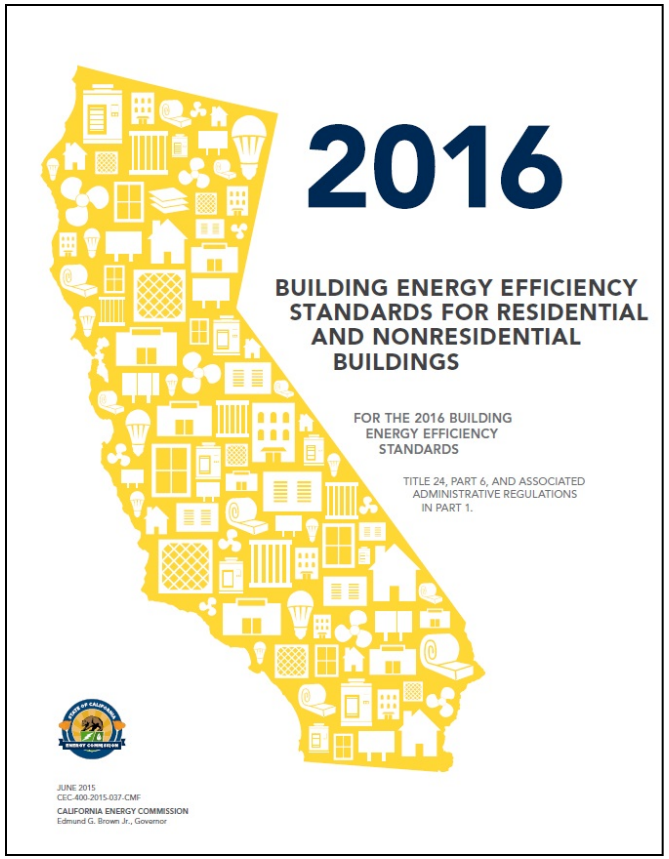

2016 Nonresidential Energy Savings

- **Overall, 5% more efficient than 2013 Standards**
  - Electric Savings = 192 GWHs
  - Demand Reduction = 80 MW
  - Gas Savings = (0.9) Mtherms

Summary of Major Changes

- Nonresidential
  - Clean-up changes to clarify Standards and resolve compliance concerns
  - Emphasis on nonresidential lighting alterations
  - Overall goal to keep current with ASHRAE 90.1 national consensus standards

NONRESIDENTIAL MANDATORY LIGHTING MEASURES

Area Controls

§130.1(a)

- Must have manual ON/OFF control for all indoor lighting. Each enclosed space must be controlled separately.

- Controls must be readily accessible
  - The manual control must be located within the same room of the controlled lighting

- General lighting must be separately controlled from other lighting types:
  - Floor, display, ornamental, track, and special effects lighting must be separately controlled on circuits that are 20 amps or less

Multi-level Controls

§130.1(b)

- **General lighting** for enclosed spaces **≥ 100 ft²** with **LPD > 0.5 W/ft²** must have multi-level lighting controls

- The number of control steps is based on luminaire type per **TABLE 130.1-A**. Some examples:
  - LEDs: continuous dimming
  - Linear fluorescent: stepped dimming or continuous dimming

TABLE 130.1-A *MULTI-LEVEL LIGHTING CONTROLS AND UNIFORMITY REQUIREMENTS*

Luminaire Type	Minimum Required Control Steps (percent of full rated power[1])				Uniform level of illuminance shall be achieved by:
Line-voltage sockets except GU-24	Continuous dimming 10-100 percent				
Low-voltage incandescent systems					
LED luminaires and LED source systems					
GU-24 rated for LED					
GU-24 sockets rated for fluorescent > 20 watts	Continuous dimming 20-100 percent				
Pin-based compact fluorescent > 20 watts[2]					
GU-24 sockets rated for fluorescent ≤ 20 watts	Minimum one step between 30-70 percent				Stepped dimming; or Continuous dimming; or Switching alternate lamps in a luminaire
Pin-based compact fluorescent ≤ 20 watts[2]					
Linear fluorescent and U-bent fluorescent ≤ 13 watts					
Linear fluorescent and U-bent fluorescent > 13 watts	Minimum one step in each range:				Stepped dimming; or Continuous dimming; or Switching alternate lamps in each luminaire, having a minimum of 4 lamps per luminaire illuminating the same area and in the same manner
	20-40 %	50-70 %	75-85 %	100 %	
Track Lighting	Minimum one step between 30 – 70 percent				Step dimming; or Continuous dimming; or Separately switching circuits in multi-circuit track with a minimum of two circuits.
HID > 20 watts	Minimum one step between 50 - 70 percent				Stepped dimming; or Continuous dimming; or Switching alternate lamps in each luminaire, having a minimum of 2 lamps per luminaire, illuminating the same area and in the same manner.
Induction > 25 watts					
Other light sources					

1. Full rated input power of ballast and lamp, corresponding to maximum ballast factor
2. Includes only pin based lamps: twin tube, multiple twin tube, and spiral lamps

Multi-level controls cont.

§130.1(b)

- Dimmable luminaires must be controlled by a dimmer control capable of controlling through all required lighting steps
- Multi-level lighting controls exceptions:
  - Classrooms with connected load ≤ 0.7 w/ft^2, and public restrooms require at least one control step between 30-70%
  - Enclosed spaces with one luminaire and no more than two lamps
  - Areas required to have full or partial off occupancy sensors: open areas and aisle ways in warehouses, library book stack aisles, corridors and stairwells, parking garages/areas

Shut-OFF Controls

§130.1(c)1, 3, 4

- All indoor lighting must have an automatic shut-OFF control
  - Occupant sensing or automatic time-switch
  - Automatic time-switch must have 2 hour override and holiday shut-off feature
  - Separate controls for each floor other than stairwells
  - Separate controls for up to 5,000 ft^2 in an enclosed space

Shut-OFF Controls

§130.1(c)5

- Occupant sensors are required for:
  - Offices ≤ 250 ft^2
  - Multipurpose rooms < 1,000 ft^2
  - Classrooms, conference rooms

  - If multi-level lighting controls are required by 130.1(b), the control must be a partial-ON or vacancy sensor. Partial-ON must activate 50 to 70% of lighting power

  - If multi-level lighting controls are not required by 130.1(b), the control can be a normal occupancy sensor.

Shut-OFF Controls cont.

§130.1(c)6

- Full OFF or partial OFF occupant sensing controls required in certain areas. Lighting power must reduce by at least **50%** for:
  - Aisle ways and open areas in warehouses
  - Library book stack aisles depending on length
  - Corridors and stairwells

- If a partial OFF control is used, must also have an automatic shut-off control to turn the lighting off when the space is typically unoccupied (i.e. at night or outside of business hours)

Shut-OFF Controls cont.

§130.1(c)7, 8

- Partial-OFF occupant sensing controls required in these areas:
  - Stairwells and common area corridors in high-rise res., and hotel and motel buildings. Lighting must automatically reduce by at least 50%
  - Parking garages, parking areas, loading areas. General lighting must have at least one control step between 20% - 50%
- Hotel and motel guest rooms must have an automatic control to turn lighting off after 30 minutes of the room being vacated (captive key card, occupancy sensor)

Automatic Daylighting Controls

§130.1(d)

- Automatic daylighting controls are required for spaces:
  - ≥ 24 ft^2 of glazing; and
  - ≥ 120 W lighting in combined skylit, primary sidelit daylit zone per enclosed space

- Daylighting controls must:
  - Automatically reduce general lighting within the daylit zone
  - Primary sidelit and skylit zone must be controlled separately.
  - Provide lighting control steps per TABLE 130.1-A
  - Combined electric lighting and daylighting must be within 100% to 150% of design illuminance
  - Daylit zones must be shown on plans

Automatic Daylighting Controls cont.

§130.1(d)

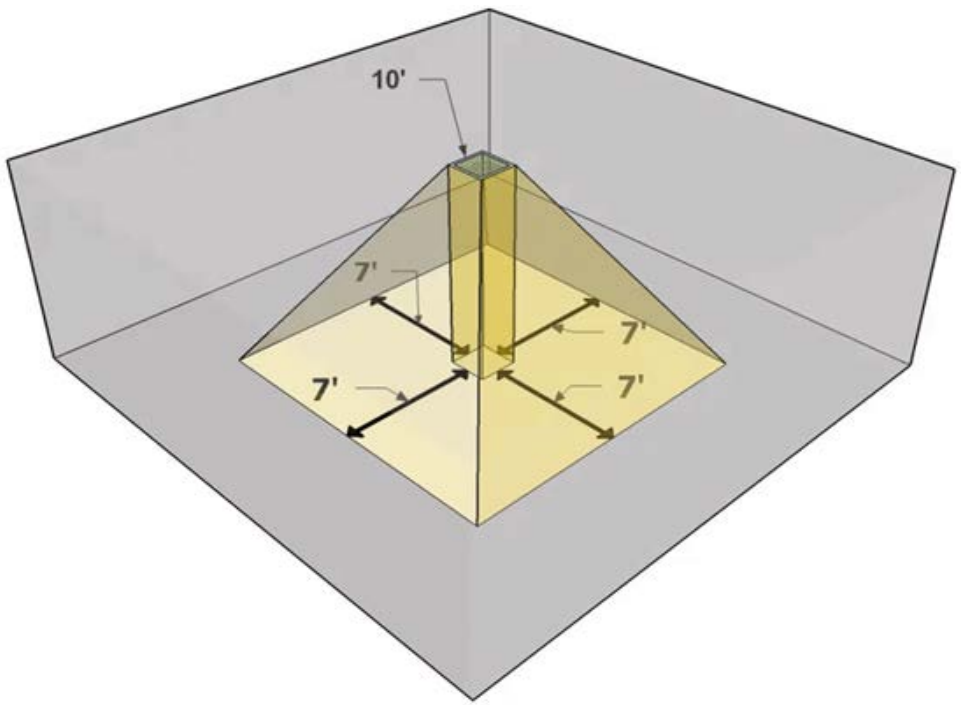

Skylit Zone

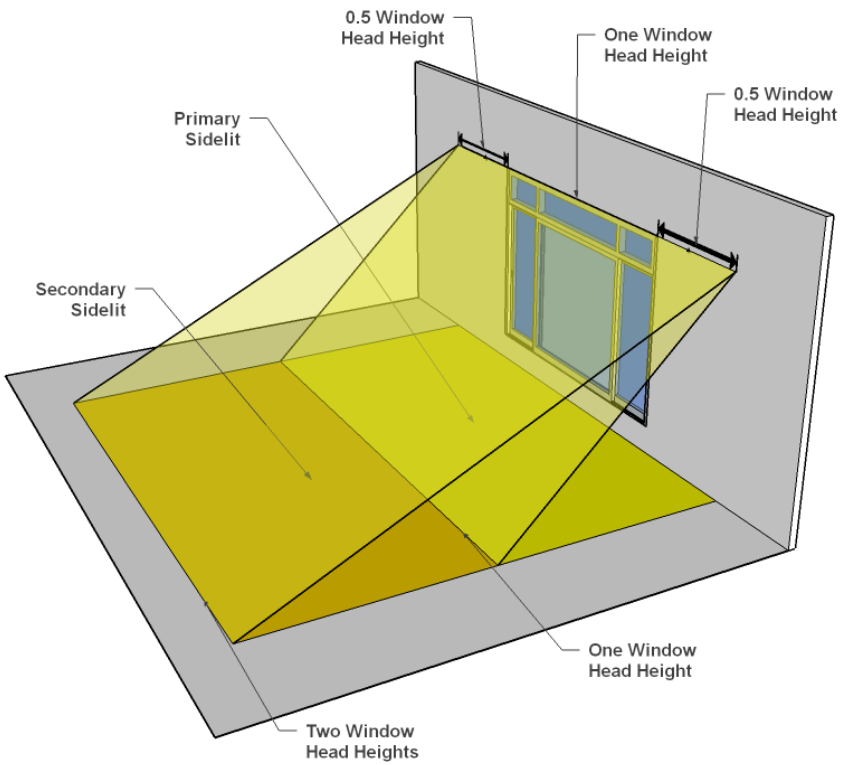

Sidelit Zone

Automatic Daylighting Controls cont.

§130.1(d)

- Daylight controls in parking garages are required when:
  - ≥ 60 watts of lighting in primary sidelit zone; and
  - ≥ 36 ft^2 of glazing or opening
- Daylighting controls must:
  - Automatically reduce general lighting within the combined primary and secondary sidelit daylit zone
  - Provide multi-level, continuous dimming or ON/OFF lighting control steps

Demand Responsive Controls

§130.1(e)

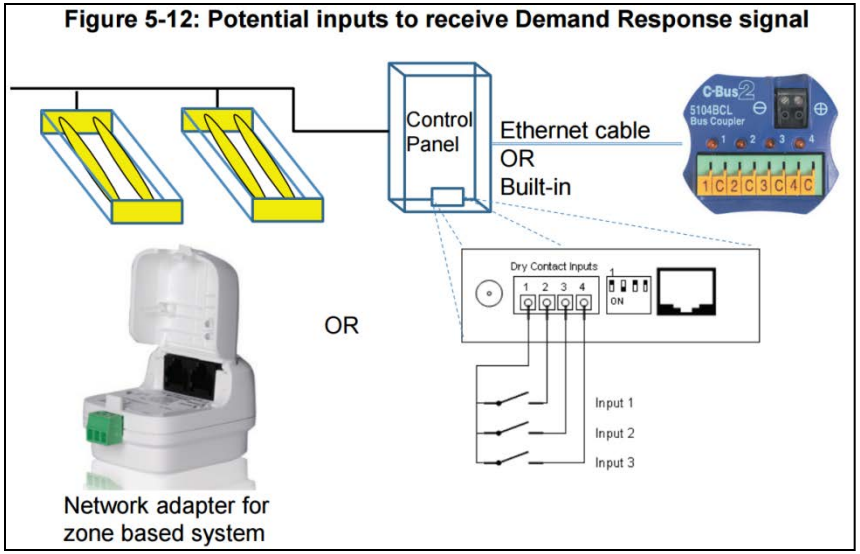

- Demand responsive (DR) Controls are required for buildings over 10,000 ft^2
  - DR control must be capable of receiving a DR signal (OpenADR, SEP, etc.)
  - Automatically reduce total lighting power by minimum 15%
  - Spaces with LPD $\leq$ 0.5 W/ft^2 are excluded from the 10,000 ft^2 threshold

Acceptance Testing

§130.4

- Acceptance testing required for:
  - Automatic shut-OFF
  - Automatic daylighting
  - Demand responsive
  - Institutional tuning
  - Outdoor lighting controls

- Must use certified ATTs from an approved Acceptance Test Technician Certification Provider (ATTCP)
- http://www.energy.ca.gov/title24/attcp/

NONRESIDENTIAL PRESCRIPTIVE LIGHTING MEASURES

Power Adjustment Factors

§140.6(a)2

- Power Adjustment Factor (PAF): Additional lighting power allowance for installing controls beyond mandatory requirements

TABLE 140.6-A LIGHTING POWER ADJUSTMENT FACTORS (PAF)

TYPE OF CONTROL	TYPE OF AREA		FACTOR
a. To qualify for any of the Power Adjustment Factors in this table, the installation shall comply with the applicable requirements in Section 140.6(a)2 b. Only one PAF may be used for each qualifying luminaire unless combined below. c. Lighting controls that are required for compliance with Part 6 shall not be eligible for a PAF			
1. Daylight Dimming plus OFF Control	Luminaires in skylit daylit zone or primary sidelit daylit zone		0.10
2. Occupant Sensing Controls in Large Open Plan Offices	In open plan offices > 250 square feet: One sensor controlling an area that is:	No larger than 125 square feet	0.40
		From 126 to 250 square feet	0.30
		From 251 to 500 square feet	0.20
3. Institutional Tuning	Luminaires in non-daylit areas: Luminaires that qualify for other PAFs in this table may also qualify for this tuning PAF.		0.10
	Luminaires in daylit areas: Luminaires that qualify for other PAFs in this table may also qualify for this tuning PAF.		0.05
4. Demand Responsive Control	All building types less than 10,000 square feet. Luminaires that qualify for other PAFs in this table may also qualify for this demand responsive control PAF		0.05

Calculation of Allowed Lighting Power

§140.6(c)

- There are three methods to calculate lighting power allowance:
  - Complete Building (TABLE 140.6-B)
  - Area Category (TABLE 140.6-C)
  - Tailored (TABLE 140.6-D through TABLE 140.6-G)

- Lighting power density (LPD, W/ft^2) are assigned to buildings or space types.

- ~50% of function areas saw reduction in LPD. Indoor LPDs based on HPT8 linear fluorescent.

Calculation of Allowed Lighting Power

§140.6(c)

- Complete Building Method
  - TABLE 140.6-B lists building types and corresponding LPD
  - Single LPD for entire building

TABLE 140.6-B COMPLETE BUILDING METHOD LIGHTING POWER DENSITY VALUES

TYPE OF BUILDING	ALLOWED LIGHTING POWER DENSITY (WATTS PER SQUARE FOOT)
Auditorium Building	1.5
Classroom Building	1.1
Commercial and Industrial Storage Building	0.6
Convention Center Building	1.2
Financial Institution Building	1.1
General Commercial Building/Industrial Work Building	1.0
Grocery Store Building	1.5
Library Building	1.3
Medical Building/Clinic Building	1.1
Office Building	0.8
Parking Garage Building	0.2
Religious Facility Building	1.6
Restaurant Building	1.2
School Building	1.0
Theater Building	1.3
All others buildings	0.6

Calculation of Allowed Lighting Power

§140.6(c)

- Area Category Method
  - TABLE 140.6-C lists function areas and corresponding LPD
  - Each area calculated separately
  - Sum allowed lighting power for all areas combined

TABLE 140.6-C AREA CATEGORY METHOD - LIGHTING POWER DENSITY VALUES (WATTS/FT²)

PRIMARY FUNCTION AREA		ALLOWED LIGHTING POWER (W/ft²)	PRIMARY FUNCTION AREA		ALLOWED LIGHTING POWER (W/ft²)
Auditorium Area		1.5 [3]	Library Area	Reading areas	1.2 [3]
Auto Repair Area		0.9 [2]		Stack areas	1.5 [3]
Beauty Salon Area		1.7	Lobby Area	Hotel lobby	1.1 [3]
Civic Meeting Place Area		1.3 [3]		Main entry lobby	1.5 [3]
Classroom, Lecture, Training, Vocational Areas		1.2 [5]	Locker/Dressing Room		0.8
Commercial and Industrial Storage Areas (conditioned and unconditioned)		0.6	Lounge Area		1.1 [3]
Commercial and Industrial Storage Areas (refrigerated)		0.7	Malls and Atria		1.2 [3]
Convention, Conference, Multipurpose and Meeting Center Areas		1.4 [3]	Medical and Clinical Care Area		1.2
Corridor, Restroom, Stair, and Support Areas		0.6	Office Area	> 250 square feet	0.75
Dining Area		1.1 [3]		≤ 250 square feet	1.0
Electrical, Mechanical, Telephone Rooms		0.7 [2]	Parking Garage Area	Parking Area	0.14
Exercise Center, Gymnasium Areas		1.0		Dedicated Ramps	0.3
Exhibit, Museum Areas		2.0		Daylight Adaptation Zones [9]	0.6
Financial Transaction Area		1.2 [3]	Religious Worship Area		1.5 [3]
General Commercial and Industrial Work Areas	Low bay	0.9 [2]	Retail Merchandise Sales, Wholesale Showroom Areas		1.2 [6 and 7]
	High bay	1.0 [2]			
	Precision	1.2 [4]	Theater Area	Motion picture	0.9 [3]
Grocery Sales Area		1.2 [6 and 7]		Performance	1.4 [3]

Calculation of Allowed Lighting Power

§140.6(c)

- Tailored Method:
  - TABLE 140.6-D lists function areas and target illumination levels
  - Provides general lighting power allowance
  - Also provides additional allowance for specialized lighting if needed:
    - Wall display
    - Floor display
    - Ornamental

Daylight Controls in Secondary Zones

§140.6(d)

- Secondary Daylit Zones
  - Meet §130.1(d)2
  - Separately controlled
  - Shown on the plans
  - Photosensor located so that it is not readily accessible
  - Control steps according to TABLE 130.1-A
- Exception: secondary daylit zone with < 120 watts of general lighting

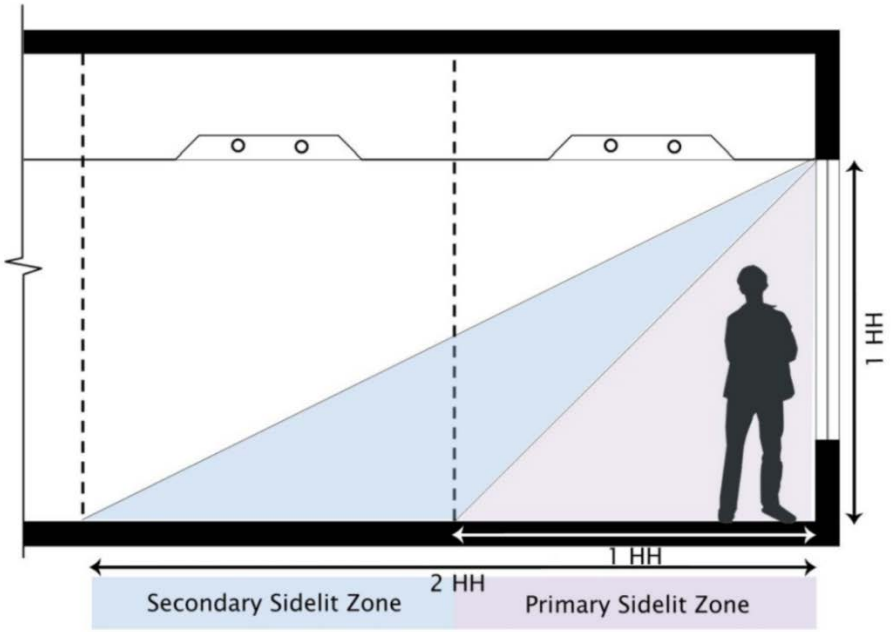

NONRESIDENTIAL INDOOR LIGHTING ALTERATIONS

Nonres. Indoor Lighting Alterations

§141.0(b)2I, J

2013 - Lighting Alterations	2016 - Lighting Alterations
• Lighting System Alterations	• Entire Luminaire Alterations ➢ Removing and reinstalling luminaires (≥ 10% of existing) ➢ Replacing or adding luminaires ➢ Adding, removing, replacing walls along with redesign of lighting system
• Luminaire Modification in Place	• Luminaire Component Modification ➢ Replacing ballast/driver and lamps ➢ Changing the light source ➢ Changing the optical system

Nonres. Indoor Lighting Alterations cont.

§141.0(b)2I, J

Meeting power and control requirements

Meet LPD requirements and controls

- Area control
- Multi-level lighting control
- Shut-OFF control
- Automatic daylight control
- Demand responsive control

Similar to 2013

Reduce existing lighting power by 50% or 35% and controls

- Area control
- Shut-OFF control

New for 2016

Nonres. Indoor Lighting Alterations cont.

§141.0(b)2I, J

Table 3 - Control Requirements for Lighting Alterations

Applicable Section 130.1 Control requirements:	Resulting lighting power, compared to the lighting power allowance specified in **Section 140.6(c)2**, Area Category Method		Option 3 Lighting power is reduced by 35/50% compared to existing
	Option 1 Lighting power is > 85% to 100% of allowance	Option 2 Lighting power is ≤ 85% of allowance	
Sections 130.1(a)1, 2, and 3 Area Controls	Yes	Yes	Yes
Section 130.1(b) Multi-Level Lighting Controls – only for alterations to general lighting of enclosed spaces 100 square feet or larger with a connected lighting load that exceeds 0.5 watts per ft^2	Yes	For each enclosed space, minimum one step between 30-70 percent of lighting power regardless of luminaire type, or meet **Section 130.1(b)**	Not Required
Section 130.1(c) Shut-Off Controls	Yes	Yes	Yes[1]
Section 130.1(d) Automatic Daylight Controls	Yes	Not Required	Not Required
Section 130.1(e) Demand Responsive Controls – only for alterations > 10,000 ft^2 in a single building, where the alteration also changes the area of the space, or changes the occupancy type of the space, or increases the lighting power	Yes	Not Required	Not Required

[1] As bi-level controls are not required for this option, partial-off controls are not required to be installed in place of "full off" automatic shutoff controls for library book stack aisles, corridors and stairwells (see **Sections 141.0(b)2Iii** and **Jii**).

Nonres. Indoor Lighting Alterations cont.
§141.0(b)2K

- Lighting Wiring Alterations consist of:
  - Adding a circuit feeding luminaires
  - Replace, modify, or relocate wiring between a switch or panelboard and luminaires
  - Replace lighting control panels, panelboards, or branch circuit wiring

- Applicable Lighting Wiring Alteration requirements for the enclosed space:
  - Meet lighting power allowance requirements in §140.6
  - Area controls, shut-OFF controls
  - Multilevel lighting controls: one control step between 30 – 70% or meet §130.1(b)
  - Daylighting controls §130.1(d) (if ≥ 10 luminaires in the daylit zone)

Nonres. Indoor Lighting Alterations cont.

§141.0(b)2K

- Acceptance testing is required for lighting alterations
  - Acceptance testing is not required if installing controls for 20 or fewer luminaires for the entire project.

NONRESIDENTIAL OUTDOOR LIGHTING REQUIREMENTS

Outdoor Lighting Zones

Part 1, §10-114

- LZ determines outdoor lighting power allowances for the project
  - Illumination lowest in LZ0, highest in LZ4
  - Maximum zonal lumen limits (Luminaire cutoff)

- LZ prevents over lighting of outdoor areas
  - Reduce glare
  - Reduce light pollution
  - Save energy

TABLE 10-114-A LIGHTING ZONE CHARACTERISTICS AND RULES FOR AMENDMENTS BY LOCAL JURISDICTIONS

Zone	Ambient Illumination	State wide Default Location	Moving Up to Higher Zones	Moving Down to Lower Zones
LZ0	Very Low	Undeveloped areas of government designated parks, recreation areas, and wildlife preserves.	Undeveloped areas of government designated parks, recreation areas, and wildlife preserves can be designated as LZ1 or LZ2 if they are contained within such a zone.	Not applicable
LZ1	Low	Developed portion of government designated parks, recreation areas, and wildlife preserves. Those that are wholly contained within a higher lighting zone may be considered by the local government as part of that lighting zone.	Developed portion of a government designated park, recreation area, or wildlife preserve, can be designated as LZ2 or LZ3 if they are contained within such a zone.	Not applicable.
LZ2	Moderate	Rural areas, as defined by the 2010 U.S. Census.	Special districts within a default LZ2 zone may be designated as LZ3 or LZ4 by a local jurisdiction. Examples include special commercial districts or areas with special security considerations located within a rural area.	Special districts and government designated parks within a default LZ2 zone maybe designated as LZ1 by the local jurisdiction for lower illumination standards, without any size limits.
LZ3	Moderately High	Urban areas, as defined by the 2010 U.S. Census.	Special districts within a default LZ3 may be designated as a LZ4 by local jurisdiction for high intensity nighttime use, such as entertainment or commercial districts or areas with special security considerations requiring very high light levels.	Special districts and government designated parks within a default LZ3 zone may be designated as LZ1 or LZ2 by the local jurisdiction, without any size limits.
LZ4	High	None.	Not applicable.	Not applicable.

Outdoor Lighting Zones

Part 1, §10-114

- Determining LZ
  - Lookup address on U.S. Census Bureau site http://factfinder.census.gov
  - Census data will specify if the address is located in rural (LZ2) or urban area (LZ3)

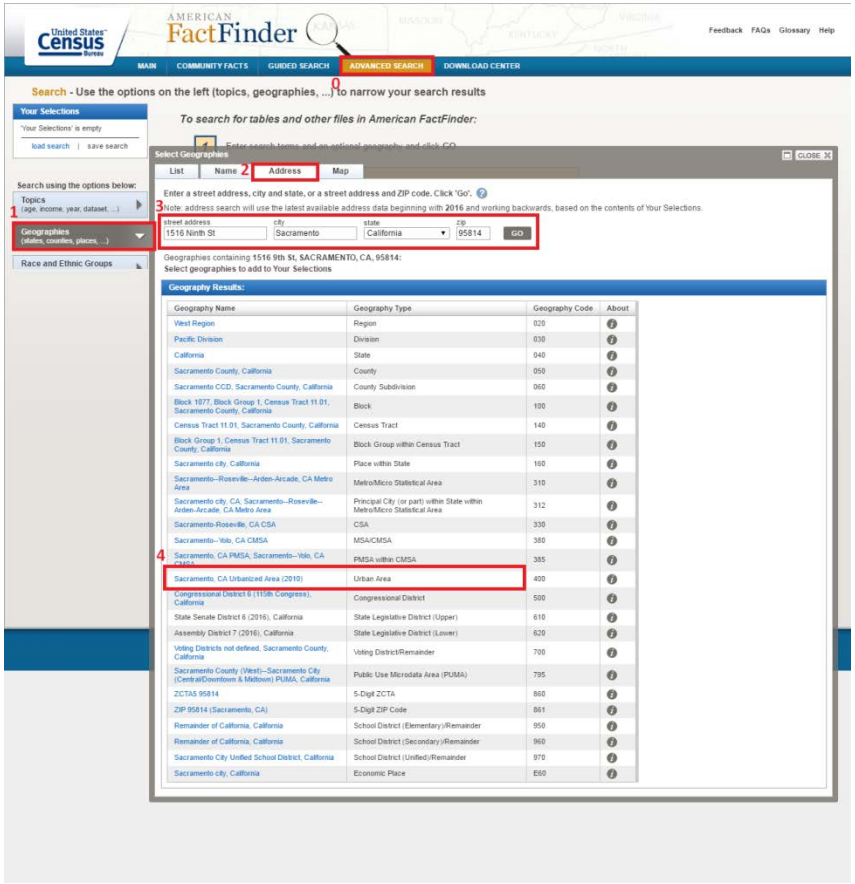

MANDATORY OUTDOOR LIGHTING REQUIREMENTS

Outdoor Lighting

§130.2(a), §130.2(b)

- Outdoor Incandescent Lighting - §130.2(a)
  - Incandescent luminaires > 100 watts must be controlled by a motion sensor

- Luminaire Cutoff - §130.2(b)
  - Outdoor luminaires > 150 watts must comply with luminaire cutoff requirements (BUG requirements)
  - Uplight lumen requirements TABLE 130.2-A
  - Glare lumen requirements TABLE 130.2-B

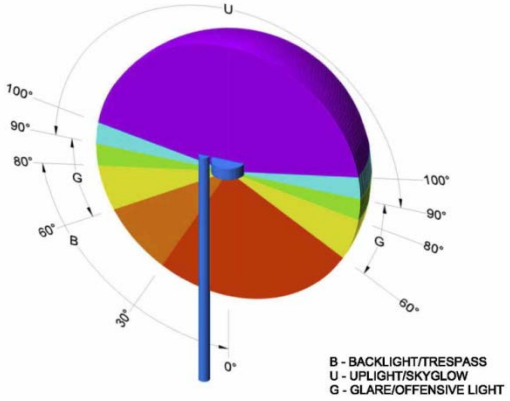

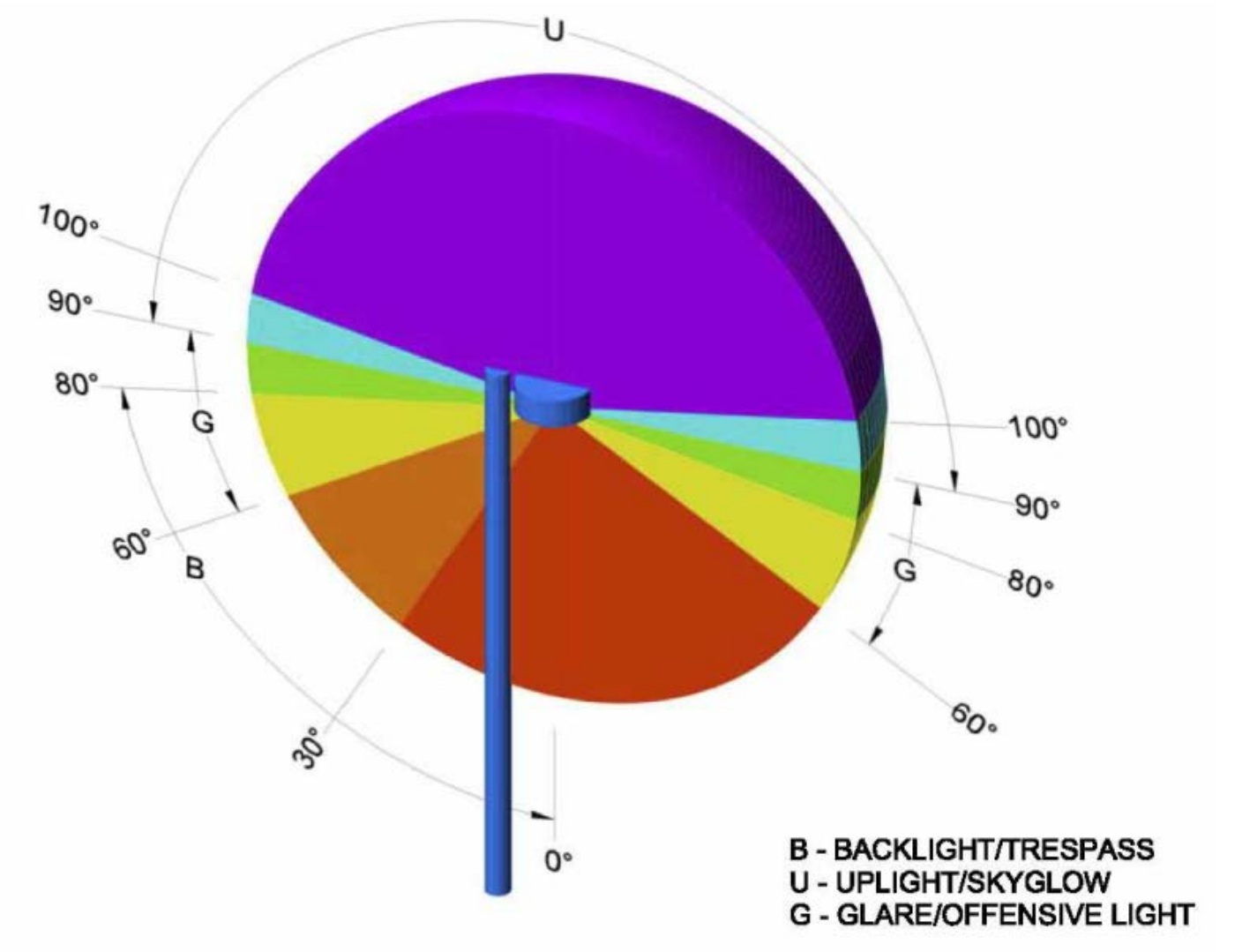
U
100°
90°
80°
G
60°
B
30°
0°
100°
90°
G
80°
60°
B - BACKLIGHT/TRESPASS
U - UPLIGHT/SKYGLOW
G - GLARE/OFFENSIVE LIGHT

Outdoor Lighting Controls

§130.2(c)

- ALL outdoor luminaires must have - §130.2(c)1, §130.2(c)2:
  - Photocontrol and time-switch control; or
  - Astronomical time-switch control; or
  - Other control capable of automatically shutting OFF outdoor lighting when daylight is available

Outdoor Lighting Motion Sensors

§130.2(c)

- Outdoor lighting mounted ≤ 24 feet above the ground - §130.2(c)3:
  - Motion sensor that automatically reduces lighting by 40 to 90%
  - No more than 1,500 watts controlled together
- Exceptions:
  - Pole-mounted luminaires ≤ 75 watts
  - Non-pole mounted luminaires ≤ 30 watts
  - Linear lighting ≤ 4 watts per linear foot of luminaire
  - Sales frontage complying with §130.2(c)4
  - Building facades, ornamental hardscape, and outdoor dining complying with §130.2(c)5
  - Outdoor lighting applications exempt from §140.7(a)

Outdoor Lighting Controls cont.

§130.2(c)

- Outdoor sales frontage lighting must have - §130.2(c)4:
  - Part-night outdoor lighting control; or
  - Motion sensor that automatically reduces lighting by 40 to 90%

Outdoor Lighting Controls cont.

§130.2(c)

- For building facade, ornamental hardscape, outdoor dining lighting, one of the following required - §130.2(c)5:
  - Part-night outdoor lighting control; or
  - Motion sensor (reduce by 40 to 90%); or
  - Centralized time-based zone control
  - Wall packs mounted ≤ 24 feet above ground must be controlled by motion sensor

Outdoor Lighting Controls cont.

§130.2(c)

Luminaire	Photocell+Time-switch or Astronomical Time-switch	Choose one		
		Motion Sensor	Part-night outdoor lighting control	Centralized time-based zone lighting control
All Outdoor Lighting	x			
Outdoor Incandescent > 100 W	x	x		
Outdoor Lighting ≤ 24 ft above ground	x	x		
Outdoor Sales Frontage	x	x	x	
Building Facade	x	x	x	x
Ornamental Hardscape	x	x	x	x
Outdoor Dining Lighting	x	x	x	x
Wall pack ≤ 24 ft above ground	x	x		

Acceptance Testing

§130.4

- Acceptance testing required for:
  - Automatic time-switch
  - Motion sensors
  - Part-night controls
  - Automatic scheduling controls

- Must use certified ATTs from an approved Acceptance Test Technician Certification Provider (ATTCP)
- http://www.energy.ca.gov/title24/attcp/

Acceptance Testing Summary

- Acceptance testing is required for indoor lighting and outdoor lighting
- When applicable, acceptance tests must be specified on respective NRCC form at permit
- Field technician must report results of acceptance testing on respective NRCA form at final inspection
- Field technicians performing testing for indoor and outdoor lighting must be a Certified Lighting Controls ATT

PRESCRIPTIVE OUTDOOR LIGHTING REQUIREMENTS

Table 6-1: Scope of the Outdoor Lighting Requirements

Lighting Applications Covered		Lighting Applications Not Regulated (only as detailed in §140.7)
General Hardscape (trade-offs permitted)	**Specific Applications (trade-offs not permitted)**	
The general hardscape area of a site shall include parking lot(s), roadway(s), driveway(s), sidewalk(s), walkway(s), bikeway(s), plaza(s), bridge(s), tunnel(s) and other improved area(s) that are illuminated.	Canopies: Sales and Non-sales Drive-Up Windows Emergency Vehicle Facilities Building Entrances or Exits Building Facades Guard Stations Hardscape Ornamental Lighting Outdoor Dining Primary Entrances for Senior Care Facilities, Police Stations, Hospitals, Fire Stations, and Emergency Vehicle Facilities Outdoor Sales Frontage and Lots Special Security Lighting for Retail Parking and Pedestrian Hardscape Student Pick-up/Drop-off zone Vehicle Service Station: Canopies, Hardscape, and Uncovered Fuel Dispenser ATM Machine Lighting	Temporary Required & regulated by FAA Required & regulated by the Coast Guard. For public streets, roadways, highways, and traffic signage lighting, and occurring in the public right-of-way For sports and athletic fields, and children's playground For industrial sites For public monuments Signs regulated by §130.3 and §140.8 For stairs, wheelchair elevator lifts For ramps that are other than parking garage ramps Landscape lighting For themes and special effects in theme parks For outdoor theatrical and other outdoor live performances For qualified historic buildings
Other outdoor lighting applications that are not included in Energy Standards Tables 140.7-A or 140.7-B are assumed to be not regulated by these Standards. This includes decorative gas lighting and emergency lighting powered by an emergency source as defined by the California Electrical Code. The text in the above list of lighting applications that are not regulated has been shortened for brevity. Please see Section 6.2.2.2 for details about lighting applications not regulated.		

General Hardscape Allowance

§140.7(d)1

TABLE 140.7-A GENERAL HARDSCAPE LIGHTING POWER ALLOWANCE

Type of Power Allowance	Lighting Zone 0	Lighting Zone 1	Lighting Zone 2[2]	Lighting Zone 3[2]	Lighting Zone 4
Area Wattage Allowance (AWA)	No allowance[1]	0.020 W/ft²	0.030 W/ft²	0.040 W/ft²	0.050 W/ft²
Linear Wattage Allowance (LWA)		0.15 W/lf	0.25 W/lf	0.35 W/lf	0.45 W/lf
Initial Wattage Allowance (IWA)		340 W	450 W	520 W	640 W

[1]Continuous lighting is explicitly prohibited in Lighting Zone 0. A single luminaire of 15 Watts or less may be installed at an entrance to a parking area, trail head, fee payment kiosk, outhouse, or toilet facility, as required to provide safe navigation of the site infrastructure. Luminaires installed in Lighting Zone 0 shall meet the maximum zonal lumen limits for Uplight and Glare specified in Table 130.2-A and 130.2-B.

[2]For Lighting Zone 2 and 3, where greater than 50% of the paved surface of a parking lot is finished with concrete, the AWA for that area shall be 0.035 W/ft^2 for Lighting Zone 2 and 0.040 W/ft^2 for Lighting Zone 3, and the LWA for both lighting zones shall be 0.70 W/lf. This does not extend beyond the parking lot, and does not include any other General Hardscape areas.

- Significant reduction in general hardscape LPDs. LPDs are now based on LED lighting.
- Specific lighting applications in TABLE 140.7-B

General Hardscape Allowance

§140.7(d)1

- How to calculate general hardscape allowance:
  - What is the outdoor lighting zone (LZ) of the project?
    - Used to determine what your allowance will be
  - What is the illuminated hardscape area?
    - Used to calculate area wattage allowance
  - What is the the hardscape perimeter length?
    - Used to calculate linear wattage allowance

General Hardscape Allowance

§140.7(d)1

- Illuminated hardscape area
  - Hardscape area within a square pattern around each luminaire that is ten times the luminaire mounting height with the luminaire in the middle of the pattern

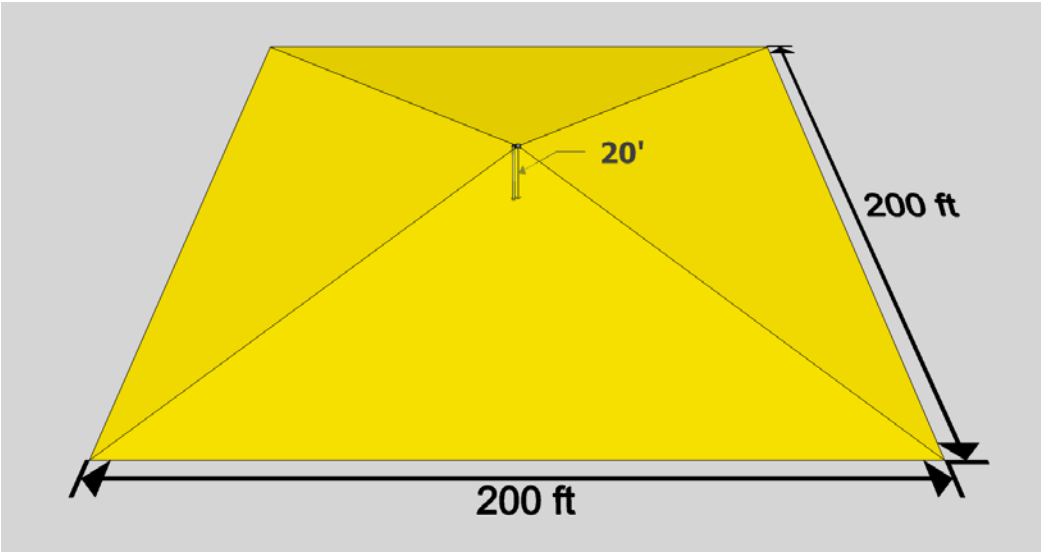

Example: Calculating General Hardscape Allowance

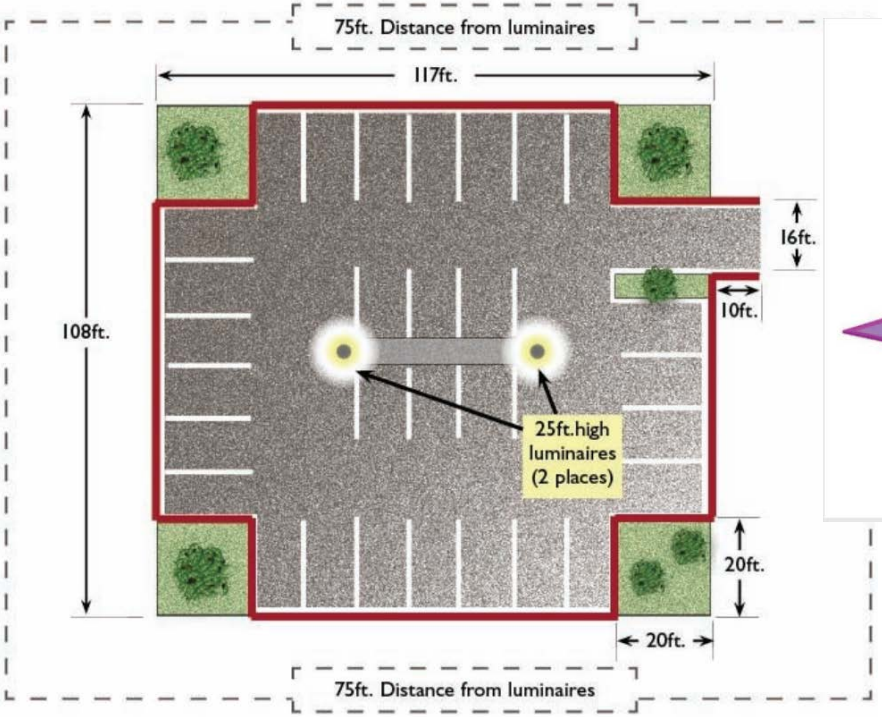

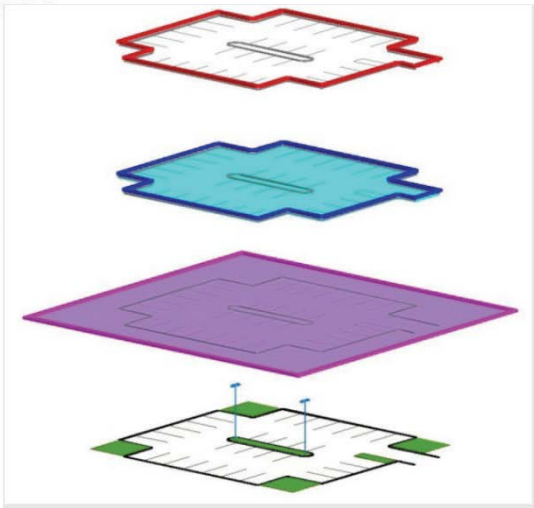

Perimeter

Area

Illuminated Area

Site Plan

Allowance for Specific Applications

§140.7(d)2

- Additional Lighting Power Allowance
  - Building Entrances/Exits
  - Drive Up Windows
  - Sales Frontage
  - Hardscape Ornamental Lighting
  - Building Facades
  - Outdoor Sales Lots
  - Vehicle Service Station Canopies/Hardscapes
  - Etc.

See TABLE 140.7-B for all applications

Allowance for Specific Applications cont.

§140.7(d)2

- Additional Lighting Power Allowance is "use it or lose it"
  - Cannot claim additional lighting power if lighting for the specific application is not installed
  - Cannot tradeoff additional lighting power
- Allowed lighting power is:
  - Sum of the general lighting power allowance and additional lighting power allowance claimed

Outdoor Lighting Power Allowance Tradeoffs

- Total lighting power allowance is the sum of general hardscape and specific lighting application allowance
- General hardscape allowance can be traded to specific lighting applications
- Allowed lighting power for specific applications cannot be traded between specific applications or to general hardscape allowance

I Occupancy and Parking Garages

- Hospitals, Jails, Prisons
  - "I" occupancies are not regulated by the Energy Efficiency Standards. This includes outdoor areas.
- Parking Garages
  - Only the uncovered top level of parking garage meets outdoor lighting requirements

NONRESIDENTIAL OUTDOOR LIGHTING ALTERATIONS

Nonres. Outdoor Lighting Alterations
§141.0(b)2L

- Three scenarios for outdoor lighting alterations:
  1. Increase connected lighting load
  2. Replacement of 5 luminaires or ≥ 10% of existing luminaires (whichever is greater)
  3. Replacement of 5 luminaires or ≥ 50% of existing luminaires (whichever is greater)
- Requirements triggered when replacing, increasing connected lighting load, or adding new luminaires.
  - Typically does not include altering or retrofitting existing luminaires

Nonres. Outdoor Lighting Alterations cont.

§141.0(b)2L

1. Increase connected lighting load
   - Added or altered luminaires must meet all control requirements in §130.2(c)
   - General Hardscape or specific lighting applications with added or altered luminaires must meet power allowance in §140.7

Outdoor Lighting Alteration - Increase in Lighting Load				
Added or Altered Luminaire	Photocell+Time-switch or Astronomical Time-switch, Meet 140.7	At least one of these controls		
		Motion Sensor	Part-night outdoor lighting control	Centralized time-based zone lighting control
All Outdoor Lighting	x			
Outdoor Incandescent > 100 W	x	x		
Outdoor Lighting ≤ 24 ft above ground	x	x		
Outdoor Sales Frontage	x	x	x	
Building Facade	x	x	x	x
Ornamental Hardscape	x	x	x	x
Outdoor Dining Lighting	x	x	x	x
Wall pack ≤ 24 ft above ground	x	x		

Nonres. Outdoor Lighting Alterations cont.

§141.0(b)2L

2. Replacement of 5 luminaires or ≥ 10% of existing luminaires (whichever is greater)
   - Altered parking lot and outdoor sales lot luminaires mounted ≤ 24 ft above ground must have:
     - Photocell or astronomical time-switch, and motion sensor
   - For all other applications and where the altered luminaire is mounted > 24 ft above ground
     - Photocell + time-switch or astronomical time-switch

Outdoor Lighting Alteration - 10% to < 50% Luminaires Replaced			
Replaced Luminaire	Photocell or Astronomical Time-switch	At least one of these controls	
		Scheduling Control	Motion Sensor
Parking Lot Lighting ≤ 24 ft above ground	x		x
Outdoor Sales Lot Lighting ≤ 24 ft above ground	x		x
All other applications	x	x	x

Nonres. Outdoor Lighting Alterations cont.

§141.0(b)2L

3. Replacement of 5 luminaires or ≥ 50% of existing luminaires
   - Altered parking lot and outdoor sales lot luminaires mounted ≤ 24 ft above ground must have:
     - Photocell or astronomical time-switch, and motion sensor
   - For all other applications and where the altered luminaire is mounted > 24 ft above ground
     - Photocell + time-switch or astronomical time-switch
   - Altered general Hardscape or specific lighting application must meet power allowance in §140.7 unless replacement luminaires reduce power by ≥ 40%

Outdoor Lighting Alteration - ≥ 50% Luminaires Replaced			
Replaced Luminaire	Photocell or Astronomical Time-switch, Meet 140.7	At least one of these controls	
		Scheduling Control	Motion Sensor
Parking Lot Lighting ≤ 24 ft above ground	x		x
Outdoor Sales Lot Lighting ≤ 24 ft above ground	x		x
All other applications	x	x	x

Nonres. Outdoor Lighting Alterations cont.

§130.2(b), Exception 5

- Replacement luminaires > 150 watts must also meet Cutoff requirements
- Replacement of pole mounted luminaires meeting all of the following conditions are exempted from BUG requirements if:
  - Existing luminaire does not meet BUG requirements
  - Spacing between existing poles is greater than 6 times the mounting height of existing luminaires
  - No additional poles are being added to the site
  - New wiring to the luminaires is not being installed
  - Connected lighting power wattage is not increased

Nonres. Outdoor Lighting Alterations cont.

§141.0(b)2L

- Acceptance testing is required for lighting alterations
  - Acceptance testing is not required if installing controls for 20 or fewer luminaires for the entire project.

Outdoor Lighting Additions

§141.0(a)1

- Additions (adding hardscape area to existing site)
  - Additions to existing outdoor lighting must meet all mandatory measures for the added luminaires
  - Addition must also comply with lighting power allowance of §140.7
  - Acceptance testing required

ELECTRICAL POWER DISTRIBUTION SYSTEMS (EPDS)

Service Electrical Metering

§130.5(a)

- Each service or feeder must have a permanently installed metering system which measures electrical energy
  - Utility meter satisfies the metering requirement (show instantaneous kW, kWh over utility defined period)
  - If a utility meter is not installed, meter capability is dependent on kVA of the service

TABLE 130.5-A MINIMUM REQUIREMENTS FOR METERING OF ELECTRICAL LOAD

Metering Functionality	Electrical Services rated 50 kVA or less	Electrical Services rated more than 50kVA and less than or equal to 250 kVA	Electrical Services rated more than 250 kVA and less than or equal to 1000kVA	Electrical Services rated more than 1000kVA
Instantaneous (at the time) kW demand	Required	Required	Required	Required
Historical peak demand (kW)	Not required	Not required	Required	Required
Tracking kWh for a user-definable period.	Required	Required	Required	Required
kWh per rate period	Not required	Not required	Not required	Required

Separation of Electrical Circuits

§130.5(b), 141.0(b)2P

- New Construction
  - EPDS designed to allow for measuring loads according to TABLE 130.5-B
  - Allows flexible approaches for providing measuring ability
- Alterations
  - **Only** applicable for complete replacements of power distribution systems
    - Most projects will not fall under this trigger

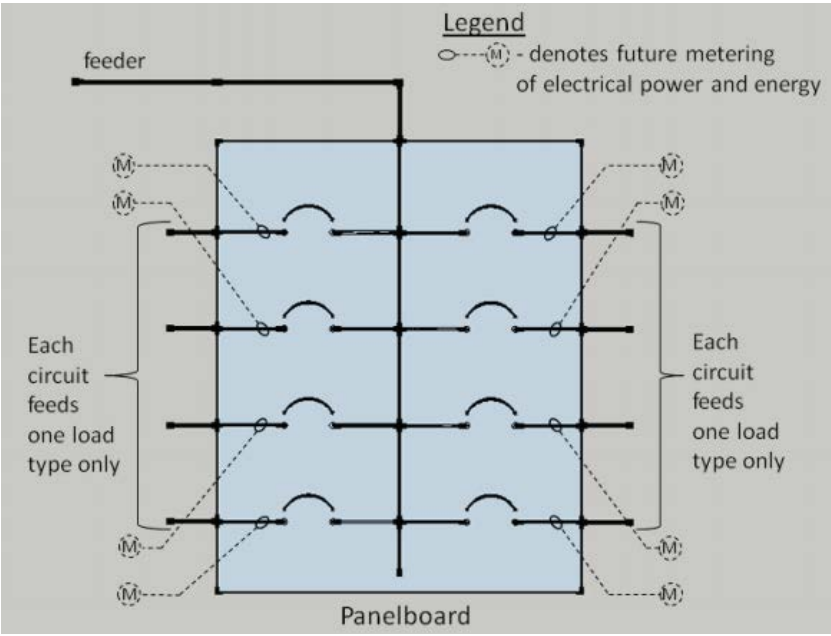

TABLE 130.5-B MINIMUM REQUIREMENTS FOR SEPARATION OF ELECTRICAL LOAD

Electrical Load Type	Electrical Services rated 50 kVA or less	Electrical Services rated more than 50kVA and less than or equal to 250 kVA	Electrical Services rated more than 250 kVA and less than or equal to 1000kVA	Electrical Services rated more than 1000kVA
Lighting including exit and egress lighting and exterior lighting	Not required	All lighting in aggregate	All lighting disaggregated by floor, type or area	All lighting disaggregated by floor, type or area
HVAC systems and components including chillers, fans, heaters, furnaces, package units, cooling towers, and circulation pumps associated with HVAC	Not required	All HVAC in aggregate	All HVAC in aggregate and each HVAC load rated at least 50 kVA	All HVAC in aggregate and each HVAC load rated at least 50kVA
Domestic and service water system pumps and related systems and components	Not required	All loads in aggregate	All loads in aggregate	All loads in aggregate
Plug load including appliances rated less than 25 kVA	Not required	All plug load in aggregate Groups of plug loads exceeding 25 kVA connected load in an area less than 5000 sf	All plug load separated by floor, type or area Groups of plug loads exceeding 25 kVA connected load in an area less than 5000 sf	All plug load separated by floor, type or area All groups of plug loads exceeding 25 kVA connected load in an area less than 5000 sf
Elevators, escalators, moving walks, and transit systems	Not required	All loads in aggregate	All loads in aggregate	All loads in aggregate
Other individual non-HVAC loads or appliances rated 25kVA or greater	Not required	All loads in aggregate	All loads in aggregate	All loads in aggregate
Industrial and commercial load centers 25 kVA or greater including theatrical lighting installations and commercial kitchens	Not required	All loads in aggregate	All loads in aggregate	All loads in aggregate
Renewable power source (net or total)	Each group	Each group	Each group	Each group
Loads associated with renewable power source	Not required	All loads in aggregate	All loads in aggregate	All loads in aggregate
Charging stations for electric vehicles	All loads in aggregate	All loads in aggregate	All loads in aggregate	All loads in aggregate

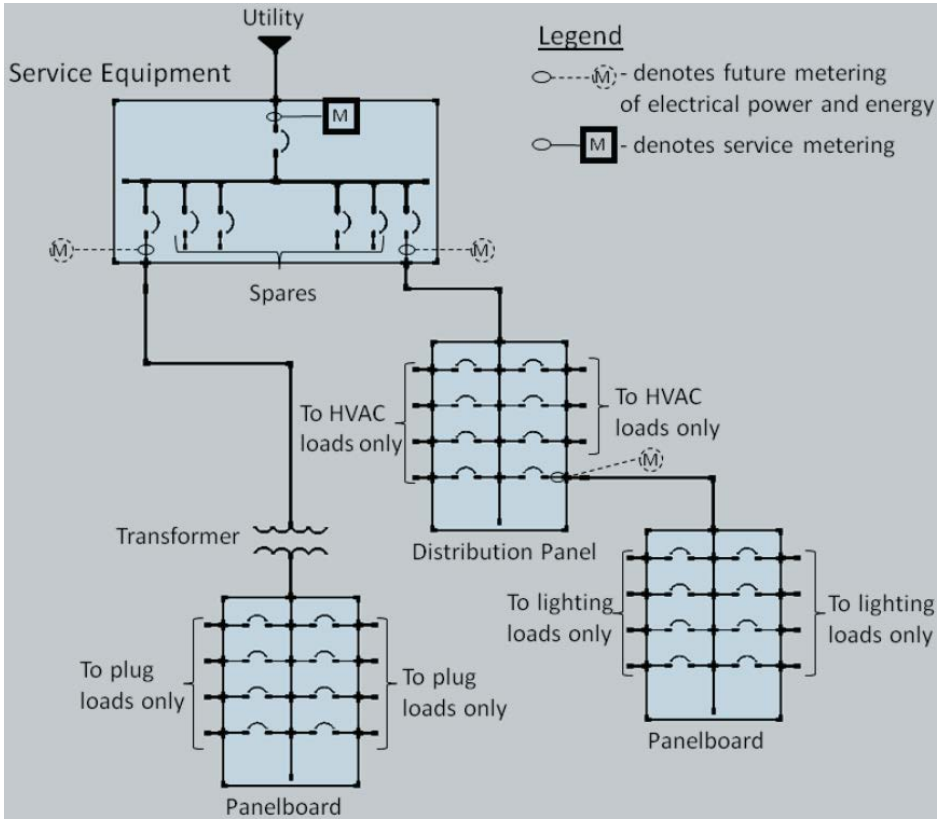
Utility
Service Equipment
Legend
- denotes future metering of electrical power and energy
- denotes service metering
M
Spares
To HVAC loads only
To HVAC loads only
Distribution Panel
Transformer
To lighting loads only
To lighting loads only
Panelboard
To plug loads only
To plug loads only
Panelboard

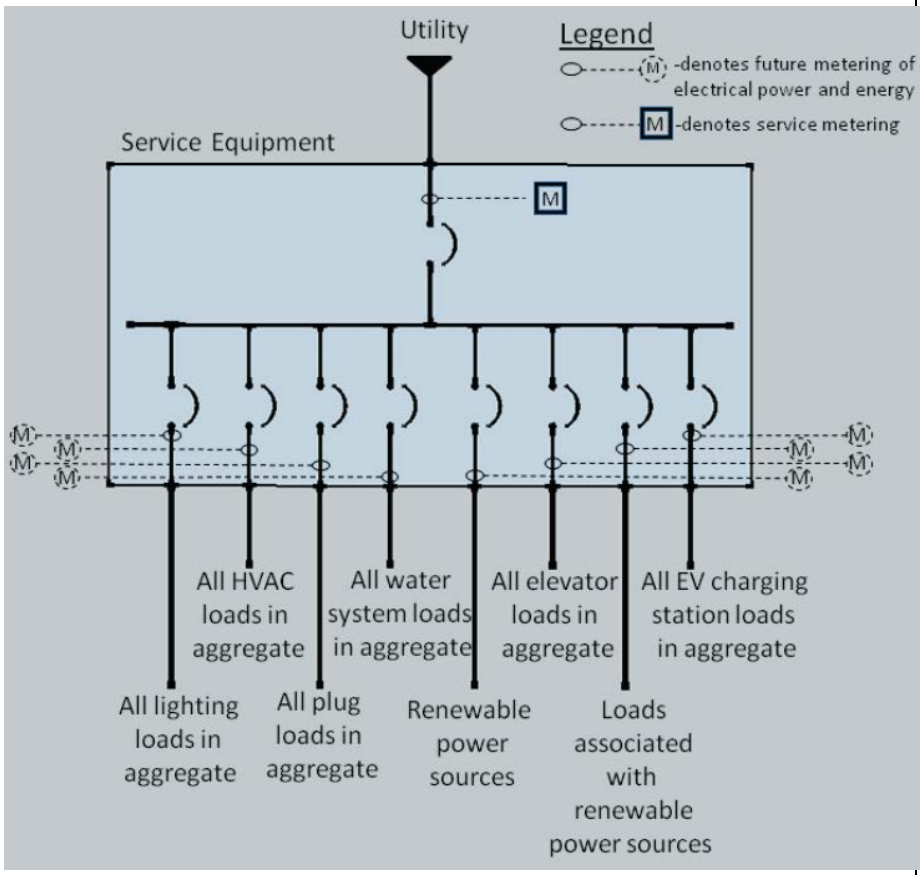
Utility
Legend
-denotes future metering of electrical power and energy
-denotes service metering
Service Equipment
M
All HVAC loads in aggregate
All water system loads in aggregate
All elevator loads in aggregate
All EV charging station loads in aggregate
All lighting loads in aggregate
All plug loads in aggregate
Renewable power sources
Loads associated with renewable power sources

Voltage Drop

§130.5(c), 141.0(b)2P

- Now allows total combined voltage drop of feeder conductors and branch circuits to not exceed 5%
  - Previously limited feeders to 2% of voltage drop, and branch circuits to 3%
- Alterations
  - Applicable when both feeders and branch circuits are added or replaced
- Added exception for voltage drop permitted by Electrical Code

Controlled Receptacle Requirements

§130.5(d), 141.0(b)2P

- **Controlled receptacles required in:** Office areas, lobbies, conference rooms, kitchen areas in office spaces, copy rooms, and hotel and motel guest rooms

- **Requirements for controlled receptacles:**
  - Automatic time-switch controls (plus 2 hour override) or motion control
  - Controlled receptacle must be marked
  - At least one controlled receptacle or splitwired receptacle within 6 feet of uncontrolled receptacle

Controlled Receptacle Requirements

§130.5(d), 141.0(b)2P

- **Hotel/Motel Guest rooms**
  - At least 50% of receptacles must be controlled
  - Captive card key or occupancy sensing controls
  - Shut-off after 30 minutes of vacancy
- **Alterations**
  - **Only** applicable for complete replacements of power distribution systems
    - Most projects will not fall under this trigger

SIGN LIGHTING

Sign Lighting Controls

§130.3(a)1, 2

- Indoor Signs must have:
  - Automatic time-switch; or
  - Astronomical time-switch
- Outdoor Signs must have:
  - Automatic time-switch and photosensor; or
  - Astronomical time-switch control and photosensor
  - Outdoor signs ON both day and night must also have a dimmer that automatically reduces power by at least 65% during nighttime hours

Sign Lighting Controls

§130.3(a)3

- Electronic Message Center (EMC) with load > 15 kW must have:
  - Demand responsive control
  - Must be capable of automatically reducing lighting power by a minimum of 30%

Sign Lighting Power
§140.8

- Sign lighting power requirements apply to internally illuminated signs, externally illuminated signs, unfiltered LED, and unfiltered neon
- Two compliance paths:
  - Maximum Allowed Lighting Power
    - Internally illuminated signs
    - Externally illuminated signs
    - Unfiltered LEDs and neon must comply with alternate lighting sources method
  - Alternate Lighting Sources
    - Automatically comply if specific light sources are used

Maximum Allowed Lighting Power

§140.8(a)1

- Internally illuminated signs
  - Allowed lighting power is illuminated face area x 12 watts/ft^2

Figure 7-2: Single-faced Internally Illuminated Cabinet Sign with Fluorescent Lamps and Translucent Face

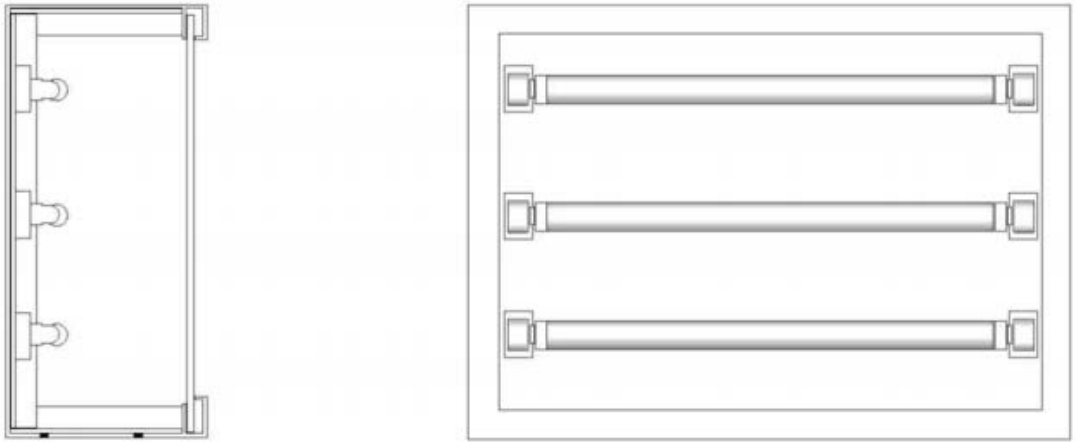

Maximum Allowed Lighting Power

§140.8(a)2

- Externally illuminated signs
  - Allowed lighting power is illuminated face area x 2.3 watts/ft^2

Figure 7-5: Externally Illuminated Sign Using Flood Lighting

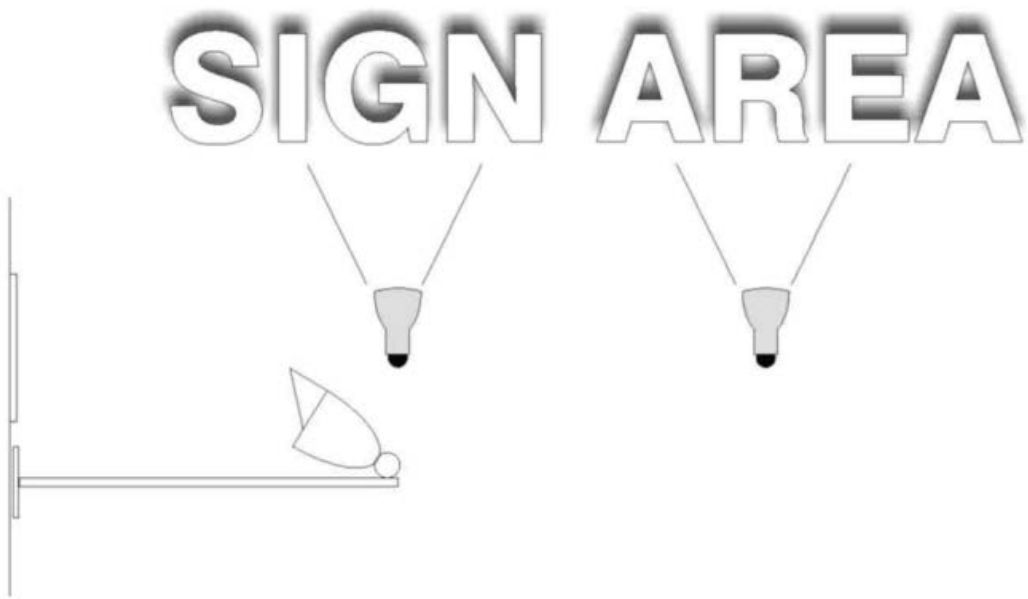

Alternate Lighting Sources
§140.8(b)

- High pressure sodium (HPS)
- Metal halide (MH)
  - Pulse start or ceramic MH with ballast efficiency ≥ 88%; or
  - Pulse start MH ≤ 320 watt with ballast efficiency ≥ 80% (Not including 175 watt or 250 watt MH lamps)
- Neon or cold cathode
  - Rated output current < 50 mA: power supply/transformer efficiency ≥ 75%; or
  - Rated output current ≥ 50 mA: power supply/transformer efficiency ≥ 68%
  - Unfiltered neon must meet §140.8(b)

Alternate Lighting Sources
§140.8(b)

- Fluorescent lighting
  - Use only lamps with CRI ≥ 80; or
  - Use electronic ballasts with output frequency ≥ 20 kHz
- LED
  - Power supply efficiency ≥ 80%
  - Unfiltered LED signs must meet §140.8(b)
- Compact Fluorescent (CFL)
  - Do not contain medium screw base socket (E24/E26)

Energy Verified Label

Electric Sign Listing Mark / Energy Mark (Holographic)

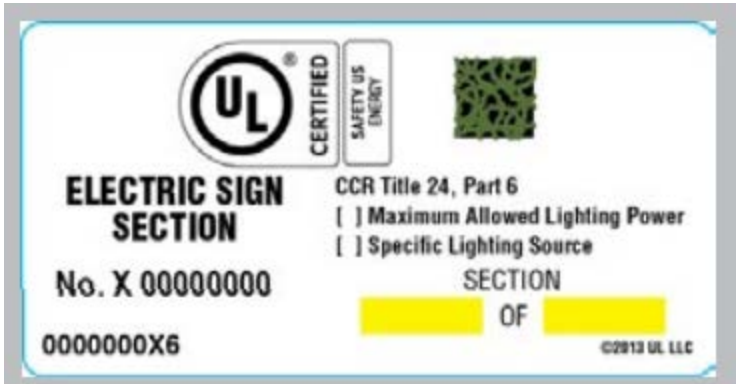

Section Sign Listing Mark / Energy Mark (Holographic)

Indoor Electric Sign Listing Mark / Energy Mark (Holographic)

California Energy Commission – Title 24 Compliance Record			
Compliance Method: [ ] Maximum Allowed Power [ ] Specific Lighting Source			
Maximum Allowed Power Information		**Specific Lighting Source Information**	
Sign Area (sq ft)		The sign uses only these specific lighting sources (Refer to NOTE A BELOW)	[ ] 1 [ ] 2 [ ] 3 [ ] 4 [ ] 5 [ ] 6 [ ] 7 [ ] 8 [ ] 9 [ ] 10 CHECK ALL THAT APPLY
Sign Illumination Type Internal (I) or External (E)	[ ] I [ ] E		
Watts/sq ft Allowed	[ ] Int=12 [ ] Ext=2.3		
Total Installed Watts			
Complies	[ ] Y [ ] N	Complies	[ ] Y [ ] N

Alterations to Existing Signs

§141.0(b)2M

- Sign lighting alterations must meet power requirements of §140.8 when:
  - Increase connected lighting load; or
  - Replace and rewire > 50% of ballasts; or
  - Relocate sign to a different location on the same site or on a different site
- Note
  - Replacing ballasts or lamps alone does not trigger req.
  - There are no control requirements for sign lighting alterations
  - New signs must meet power and control requirements

QUESTIONS…

FORMS

Certificate of Compliance

- Certificate of Compliance (NRCC-XXX)
  - Submitted with permit application, included with plans
  - Used by plans examiner to verify compliance
  - Lighting power calculations, schedules, lighting controls, PAF, voltage drop, etc.
- Indoor
  - NRCC-LTI-E
- Outdoor
  - NRCC-LTO-E
- EPDS, Sign
  - NRCC-ELC-E, NRCC-LTS-E

Certificate of Installation

- Certificate of Installation (NRCI-XXX)
  - Completed by installing contractor
  - Left on-site for building inspector
  - Identifies construction documents that show lighting and controls were installed as proposed in the certificate of compliance
- Indoor
  - NRCI-LTI-01 – NRCI-LTI-06
- Outdoor
  - NRCI-LTO-01 – NRCI-LTO-02
- EPDS, Sign
  - NRCI-ELC-01, NRCI-LTS-01

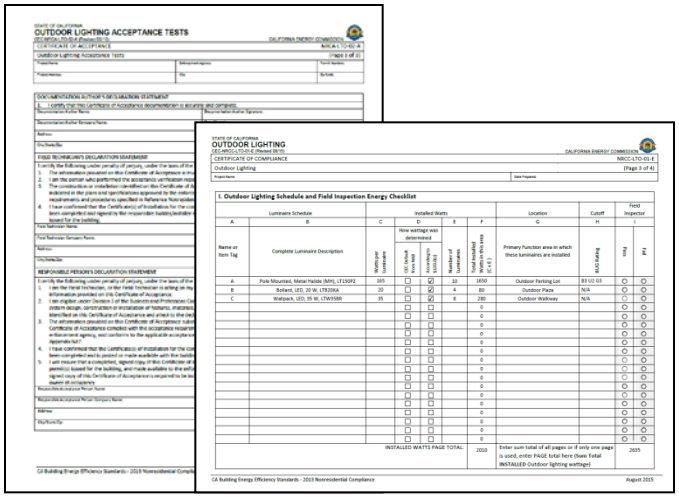

Certificate of Acceptance

- Certificate of Acceptance (NRCA-XXX)
  - Completed by acceptance test technician
  - Left on-site for building inspector, can also be provided electronically
  - Recording of test results and verification of installed controls
  - Form should be from one of the approved providers with logo, Energy Commission forms are watermarked as not for use
- Indoor
  - NRCA-LTI-02 - NRCA-LTI-05
- Outdoor
  - NRCA-LTO-02

WHAT'S NEXT? AND RESOURCES

2019 Energy Standards

- 45-day Express Terms:
  - Reduce lighting power densities to reflect LED efficacy for indoor and outdoor lighting
  - Simplify language for indoor lighting alterations
  - Establish schedules of normally occupied and normally unoccupied times for outdoor lighting
  - More information: http://www.energy.ca.gov/title24/2019standards/

Approved 2016 Compliance Software

Used to demonstrate compliance with the Energy Standards when using the Performance Approach

- Residential
  - CBECC-Res
  - Energy Pro
  - Wrightsoft Right-Energy
- Nonresidential
  - CBECC-Com
  - Energy Pro
  - IES Virtual Environment

More information at:

http://www.energy.ca.gov/title24/2016standards/2016_computer_prog_list.html

HERS Counter Card

- Available online
- Intended to assist counter staff and permit technicians
- Inform applicants about HERS testing and verification

When is **HERS testing/verification** required?

- **Home Energy Rating System (HERS)** testing is mandatory for all newly constructed buildings, and is prescriptively required for most HVAC alterations.
- Some mechanical, envelope, and water heating systems require HERS testing when modeled for compliance credit under the performance approach.
- Any HERS testing that is required for a project will be specified on the CF1R.

Who can conduct **HERS Testing?**

- Only a HERS Rater who is certified by a HERS Provider may perform HERS testing required under the Energy Standards.
- A HERS Rater can be certified to complete HERS testing for new construction (including additions) and/or alteration projects.

How do I find a **HERS Rater?**

- HERS Providers approved by the Energy Commission maintain a directory of certified HERS Raters on their respective websites (provided on the back of this card.)
- Search filters, like project type and county, are available to make finding a HERS Rater in your area easier.

NOTE: Duct leakage testing by a HERS Rater is prescriptively required for smaller nonresidential HVAC systems (see § 140.4 ()).

RESIDENTIAL

HERS TESTING

For the 2016 Energy Standards

CALIFORNIA ENERGY COMMISSION

Approved ATTCPs

- Lighting ATTCPs
  - CALCTP (2016 training approved)
  - NLCAA (2016 training approved)
- Mechanical ATTCPs
  - NEMIC (also referred to as TABB)
  - NEBB
  - CSPTC

More information at:

http://www.energy.ca.gov/title24/attcp/

ATTCP Counter Card

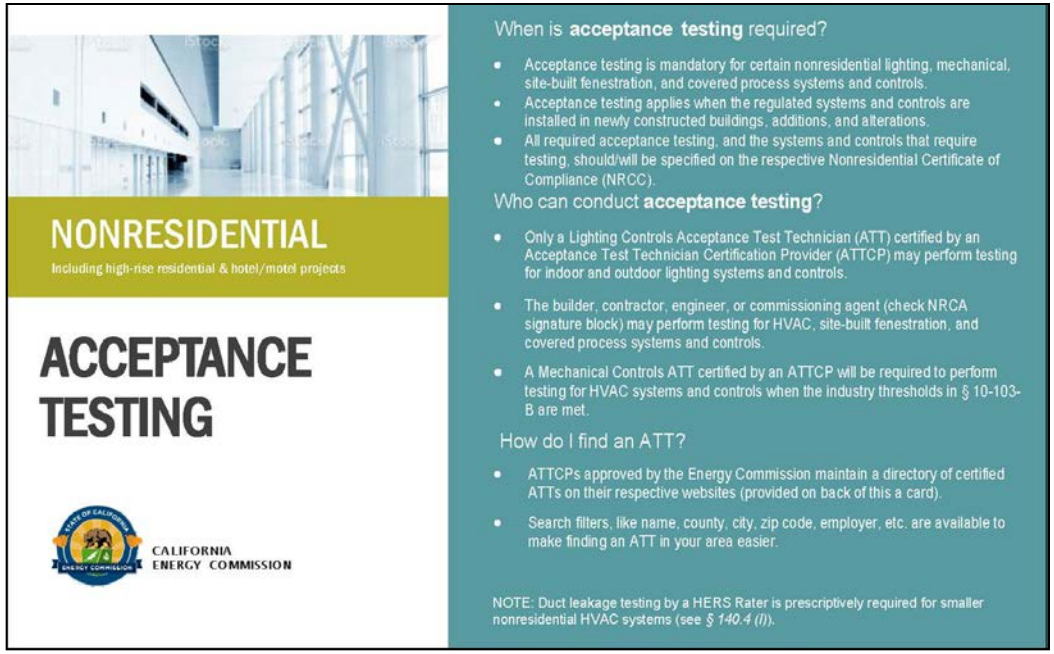

NONRESIDENTIAL

Including high-rise residential & hotel/motel projects

ACCEPTANCE TESTING

CALIFORNIA ENERGY COMMISSION

When is **acceptance testing** required?

- Acceptance testing is mandatory for certain nonresidential lighting, mechanical, site-built fenestration, and covered process systems and controls.
- Acceptance testing applies when the regulated systems and controls are installed in newly constructed buildings, additions, and alterations.
- All required acceptance testing, and the systems and controls that require testing, should/will be specified on the respective Nonresidential Certificate of Compliance (NRCC).

Who can conduct **acceptance testing**?

- Only a Lighting Controls Acceptance Test Technician (ATT) certified by an Acceptance Test Technician Certification Provider (ATTCP) may perform testing for indoor and outdoor lighting systems and controls.
- The builder, contractor, engineer, or commissioning agent (check NRCA signature block) may perform testing for HVAC, site-built fenestration, and covered process systems and controls.
- A Mechanical Controls ATT certified by an ATTCP will be required to perform testing for HVAC systems and controls when the industry thresholds in § 10-103-B are met.

How do I find an ATT?

- ATTCPs approved by the Energy Commission maintain a directory of certified ATTs on their respective websites (provided on back of this a card).
- Search filters, like name, county, city, zip code, employer, etc. are available to make finding an ATT in your area easier.

NOTE: Duct leakage testing by a HERS Rater is prescriptively required for smaller nonresidential HVAC systems (see *§ 140.4 (l)*).

- Available online
- Intended to assist counter staff and permit technicians
- Inform applicants about Acceptance Testing

Blueprint

- Email Newsletter
- Published quarterly
- Clarifications on frequently asked questions
- http://www.energy.ca.gov/efficiency/blueprint/

Issue 113 | March – April 2016

BLUEPRINT

California Energy Commission
Efficiency Division

In This Issue

- New Mechanical Acceptance Test Technician Certification Provider
- Small Duct High Velocity Space Conditioning Systems
- Demand Responsive Controls for Additions and Alterations
- Residential Water Heating Options
- EnergyPro Version 7.0
- Alternative Path for Complying with Lighting Alteration Requirements
- Lighting Standards to Save Californians More Than $4 Billion in Electricity Costs
- Q&A
  - Illuminated Areas
  - Track Lighting Alterations
  - Compliance Documents
  - Townhouses and Duplexes
  - Commissioning
- Energy Code Ace Training Schedule

New Mechanical Acceptance Test Technician Certification Provider

On January 13, 2016, the California Energy Commission (Energy Commission) approved the National Environmental Balancing Bureau (NEBB), as a mechanical Acceptance Test Technician Certification Provider (ATTCP).

This gives NEBB the authority to train, certify, and oversee acceptance test technicians (ATTs) and their employers. NEBB will train and certify ATTs to perform all 17 mechanical acceptance tests required in the *2013 Building Energy Efficiency Standards* (Energy Standards).

The Conditions of Approval are available for review in the **Executive Director's recommendation**.

For more information, please visit: **http://energy.ca.gov/title24/attcp/**.

Small Duct High Velocity Space Conditioning Systems

Small duct high velocity (SDHV) systems may be used to comply with the Energy Standards. The following is a list of requirements with direction on how SDHV systems can comply with the low-rise residential requirements of the Energy Standards.

Mandatory Requirements

United States Department of Energy Standards:

SDHV systems manufactured on or after January 23, 2006, and before January 1, 2015, must have a minimum Seasonal Energy Efficiency Ratio (SEER) of 11, and a minimum Heating Seasonal Performance Factor (HSPF) of 6.8.

SDHV systems manufactured on or after January 1, 2015, must have a minimum SEER of 12, and a minimum HSPF of 7.2.

Energy Standards:

Section 150.0(m)13B - Single zone systems that use forced air ducts to supply cooled air to an occupiable space must either meet minimum airflow and fan efficacy requirements, or meet the return duct and grille sizing requirements of **TABLES 150.0-C or 150.0-D**.

NOTE: The return duct and grille sizing alternative will likely be the method chosen for compliance when installing a SDHV system.

Section 150.0(m)15 - Specific to systems with multiple thermostatically controlled zones, this section requires the same mandatory airflow and fan efficacy requirements as **Section 150.0(m)13B**. However, it does not have the same duct and grille sizing alternative. If such systems cannot satisfy the airflow and fan efficacy requirements of this section, compliance must be demonstrated via the performance approach.

The duct leakage and insulation requirements apply as with any other system.

Prescriptive Requirements

The refrigerant charge and duct insulation requirements apply as with any other system.

1

Online Resource Center (ORC)

Online Resource Center

The Online Resource Center is provided to assist the building community and enforcement agencies with Building Energy Efficiency Standards (Energy Standards) compliance. Energy Standards apply to newly constructed buildings, as well as additions and alterations for existing buildings. Presently, the Energy Standards are updated every three years.

To assist in the compliance process, we provide compliance documents and free Public Domain Compliance Software programs for commercial and residential buildings. Training and links to the Energy Standards and compliance software are available on the Energy Commission website and at utility training centers throughout the state. To help direct you to an appropriate resource, Energy Commission and external resource information are provided on this page.

Building Energy Efficiency Standards

2016 Energy Standards

2013 Energy Standards

Past Energy Standards

Energy Standards Information and Training Materials

Overview

Commissioning

Covered Processes

Follow

Energy Standards Questions?

- Energy Standards Hotline

Energy Standards Booth Handouts

- Handouts - 05042016 (zip file, 285 mb)
- Help with the zip file

Trainings & Events

- Energy Commission's Outreach & Education Schedule
- Utility Sponsored Training Schedules

Subscribe

Building Standards List Serve

Automated Email Notifications

First name:

Last name:

Email address:

You will receive an email requesting that you confirm your subscription.

Send Reset

http://www.energy.ca.gov/title24/orc/

Energy Code Ace

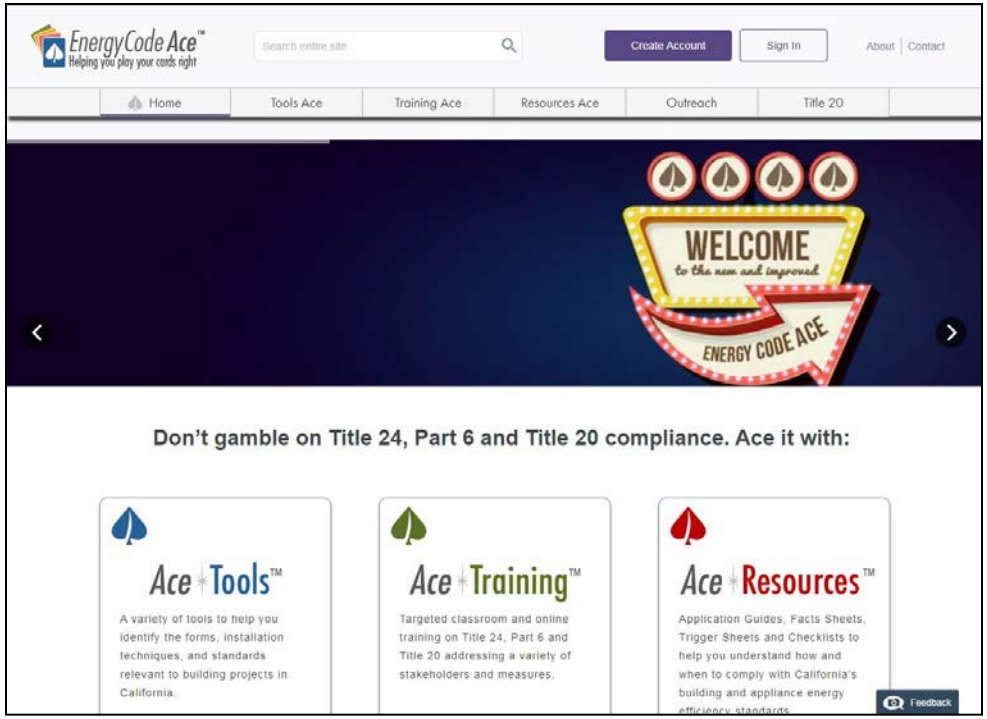

- Forms & Resource tools
- Free training (in person and online)
- Checklists, Trigger Sheets for building departments
- http://www.energycodeace.com/content/home/

Hotline

- Toll-free in California
- Open Monday through Friday
  - 8:00 a.m. to noon, and 1:00 p.m. to 4:30 p.m.
- Call at:
  - 1-800-772-3300 (In CA)
  - (916) 654-5106 (Outside CA)
- Email at: Title24@energy.ca.gov

Email Lists

- Main conduit for communicating with stakeholders
- Sign up at:
  - http://www.energy.ca.gov/listservers/
- Subscribe to the following Efficiency Lists:
  - Building Standards
  - Blueprint
- Respond to confirmation email within 24 hours